PROJECT MANUAL

Project # 901376

Storrs, Connecticut
New Engineering and Science Building

Bid Documents
Volume 2 of 2

UCONN
UNIVERSITY OF CONNECTICUT

State of Connecticut

University of Connecticut
Planning, Architectural and Engineering Services

Susan Herbst
President

Prepared By:

Mitchell|Giurgola Architects, LLP.
630 Ninth Avenue
New York, NY 10036

February 20, 2015

Conformed Set - May 29, 2015

TABLE OF CONTENTS – VOLUME 1

DIVISION 1 - GENERAL REQUIREMENTS

SECTION

01-1000	Summary
01-2200	Unit Prices
01-2300	Alternates
01-2500	Substitution Procedures
01-2600	Contract Modification Procedures
01-3100	Project Management and Coordination
01-3200	Construction Progress Documentation
01-3233	Photographic Documentation
01-3300	Submittal Procedures
01-4000	Quality Requirements
01-5000	Temporary Facilities and Controls
01-5639	Temporary Tree and Plant Protection
01-5719	Temporary Environmental controls
01-6000	Product Requirements
01-6100	University Product Standard
01-7300	Execution
017419	Construction Demolition Waste Management
01-7700	Closeout Procedures
01-7823	Operation and Maintenance Data
01-7839	Project Record Documents
01-7900	Demonstration and Training
018113	VOC Limits for Adhesives, Sealants, Paints and Coatings
018119	Construction Indoor Air Quality
019113	Building Commissioning Requirements

DIVISION 2 - EXISTING CONDITIONS

024100	Site Demolition
029400	Structural Soil

DIVISION 3 - CONCRETE

SECTION

033000	Cast-In-Place Concrete
035416	Cement Leveling Underlayment

DIVISION 4 - MASONRY

SECTION

042000	Unit Masonry
042800	Terra Cotta Assembly
047200	Cast Stone

DIVISION 5 - METALS

SECTION

051200	Structural Steel
051250	Architecturally Exposed Structural Steel
053000	Metal Decking
054000	Cold Formed Metal Framing
055000	Miscellaneous Metals
055100	Steel Pan Stairs
055117	Aluminum Slotted Framing System
055200	Decorative Rail Systems
057000	Ornamental Metals
057100	Ornamental Stairs
057700	Structural Glass Canopy

DIVISION 6 - WOOD, PLASTICS AND COMPOSITES

SECTION

062000	Carpentry
064023	Architectural Woodwork

DIVISION 7 - THERMAL AND MOISTURE PROTECTION

SECTION

071326	Sheet Membrane Waterproofing
072100	Thermal Insulation
072700	Air and Vapor Barrier Membrane
074213	Aluminum Composite Panels
074510	Preformed Metal Siding
075300	Membrane Roofing, Roof Insulation and Roof Pavers (Alternate 7)
075625	Fluid Applied Roofing System
076200	Sheet Metal Work
077100	Roof Specialties and Accessories
078100	Sprayed Fire Resistive Materials
078123	Intumescent Fireproofing
078413	Firestops and Smokeseals
079200	Joint Sealers

DIVISION 8 - OPENINGS

SECTION

081000	Door Schedule
081113	Steel Doors and Frames
081119	Stainless Steel Doors and Frames
081433	Stile and Rail Wood Doors
083113	Access Doors
084413	Curtain Walls, Storefronts and Entrances (CWSE)

084510	Interior Glazed Walls
087100	Finish Hardware
088000	Glass and Glazing
088813	Fire-Rated Glass and Framing System
089000	Louvers and Vents

DIVISION 9 - FINISHES

SECTION

092713	Glass-Reinforced Gypsum Fabrications
092900	Gypsum Drywall
093000	Tile
095113	Acoustic Panel Ceilings
095133	Metal Ceilings
096416	Edge Grain Wood Flooring
096519	Resilient Tile Flooring
096723	Architectural Epoxy Resinous Flooring
096724	Resinous Flooring for Mechanical Equipment Rooms
096727	Thin Set Epoxy Terrazzo
096728	Elastomeric Liquid Flooring
096816	Carpet (Glue Down)
099000	Painting and Finishing

DIVISION 10 - SPECIALTIES

SECTION

101100	Visual Display Surfaces
101400	Interior Signage
102113	Toilet Partitions
102800	Toilet Accessories
104416	Fire Extinguishers and Cabinets

DIVISION 11 - EQUIPMENT

SECTION

111313	**Loading Dock Bumpers**
112423	Façade Maintenance System
115210	Audio-Visual Equipment
115213	Electric Projection Screens
116100	High Performance Laboratory Fume Hoods
116200	Laboratory Equipment

DIVISION 12 - FURNISHINGS

SECTION

122413	Window Shades
123640	Stone Counters
124814	Floor Mats and Frames
125100	Laboratory Darkroom Curtains
129300	Site Furnishings

DIVISION 13 - SPECIAL CONSTRUCTION

SECTION

131146	Tank Filtration Equipment
132100	Laboratory Environmental Rooms
133413	Fiberglass Tank Construction

DIVISION 14 - CONVEYING EQUIPMENT

142100	Traction Elevators

TABLE OF CONTENTS – VOLUME 2

DIVISION 21 - FIRE SUPPRESSION

SEE SEPARATE INDEX

DIVISION 22 - PLUMBING

SEE SEPARATE INDEX

DIVISION 23 - HEATING, VENTILATING AND AIR CONDITIONING

SEE SEPARATE INDEX

DIVISION 26 - ELECTRICAL

265100	Architectural Lighting

SEE SEPARATE INDEX

DIVISION 28 – ELECTRONIC SAFETY AND SECURITY

281000	Security Systems
283110	Fire Alarm System

DIVISION 31 - EARTHWORK

310913	Vibration and Sound Monitoring
312000	Site Earthwork
312400	Building Earthwork
312333	Trenching and Backfilling
312500	Excavated Soil and Material Management
312513	Erosion and Sedimentation Controls

DIVISION 32 - EXTERIOR IMPROVEMENTS

321216	Asphalt Paving
321313	Concrete Paving
321443	Permeable Clay Brick Paver
321640	Granite Curbing
323119	Decorative Metal Fences and Gates
329001	Transplanting
329113	Soil Preparation
329119	Fine Grading
329200	Turf and Grasses
329300	Plants
329353	Landscape Maintenance

DIVISION 33 - UTILITIES

331000	Water Utilities
333000	Sanitary Sewerage Utilities
334000	Storm Drainage Utilities
334600	Foundation Drainage Systems

APPENDICES

Appendix 1
REPORT ON GEOTECHNICAL ENGINEERING ASESSMENT AND PRELIMINARY ENVIRONMENTAL PRECHARACTERIZATION PROGRAM – AUGUST, 2014
ADDITIONAL SUBSURFACE EXPLORATIONS AND GEOTECHNICAL ENGINEERING CONSIDERATIONS – 19 DECEMBER, 2014

Appendix 2
REPORT ON ENVIRONMENTAL PRECHARACTERIZATION PROGRAM
PROPOSED SCIENCE AND ENGINEERING BUILDING – DECEMBER, 2014
REVISED FEBRUARY 2015

DIVISION 21 –FIRE PROTECTION

TABLE OF CONTENTS

SECTION	***TITLE***
210500	BASIC FIRE PROTECTION MATERIALS AND METHODS
210584	THROUGH-PENETRATION FIRESTOP SYSTEMS
211000	FIRE PROTECTION

DIVISION 22 –PLUMBING TABLE OF CONTENTS

SECTION	TITLE
220500	BASIC PLUMBING MATERIALS AND METHODS
220510	UNDERGROUND PLUMBING
220529	HANGERS AND SUPPORTS
220548	PLUMBING VIBRATION CONTROLS AND SEISMIC RESTRAINTS
220553	PLUMBING IDENTIFICATION
220584	THROUGH-PENETRATION FIRESTOP SYSTEMS
221110	PLUMBING VALVES
221120	PLUMBING DISTRIBUTION PIPING
221130	DRAINAGE AND VENT PIPING
221140	PLUMBING SPECIALTIES
223000	PLUMBING EQUIPMENT
224000	PLUMBING FIXTURES
226000	LABORATORY PLUMBING SYSTEMS

DIVISION 23 – HEATING, VENTILATING & AIR CONDITIONING (HVAC)

TABLE OF CONTENTS

SECTION	***TITLE***	***NO. OF PAGES***
23 0500	BASIC MECHANICAL MATERIALS AND METHODS	31
23 0510	3D BUILDING INFORMATION MODELING	11
23 0513	MOTORS AND CONTROLLERS	13
23 0514	VARIABLE FREQUENCY DRIVES	13
23 0516	PIPE EXPANSION	8
23 0519.10	METERS	8
23 0519.20	HYDRONIC PIPING SPECIALTIES	9
23 0523	HVAC VALVES AND STRAINERS	35
23 0529	HANGERS AND SUPPORTS	11
23 0533	ELECTRIC HEAT TRACING	9
23 0548	MECHANICAL VIBRATION CONTROLS & SEISMIC RESTRAINTS	25
23 0553	MECHANICAL IDENTIFICATION	7
23 0584	THROUGH-PENETRATION FIRESTOP SYSTEMS	9
23 0593	TESTING, ADJUSTING AND BALANCING	22
23 0713	DUCT INSULATION	10
23 0716	EQUIPMENT INSULATION	12
23 0719	HVAC PIPING INSULATION	16
23 2000	HVAC PIPING AND JOINTS	26
23 2113.13	HVAC UNDERGROUND PIPING	13
23 2123	HVAC HYDRONIC PUMPS AND ACCESSORIES	13
23 2223	STEAM AND CONDENSATE SPECIALTIES	15

SECTION	TITLE	NO. OF PAGES
23 2500	CHEMICAL WATER TREATMENT	11
23 3100	SHEET METAL WORK AND ACCESSORIES	32
23 3319	SOUND ATTENUATORS	7
23 3600	AIR TERMINAL BOXES	9
23 3620	LABORATORY SYSTEM	13
23 3700	REGISTERS, GRILLES AND DIFFUSERS	9
23 3723	ROOF ACCESSORIES	5
23 3900	FANS AND ACCESSORIES	23
23 4100	FILTERS	6
23 5700	HEAT EXCHANGERS	6
23 6415	AIR COOLED WATER CHILLERS	8
23 6500	COOLING TOWERS	6
23 7323	FACTORY BUILT-UP AIR HANDLING UNITS	21
23 8216	COILS	8
23 8235	TERMINAL HEAT TRANSFER UNITS	22
23 8900	STEAM HUMIDIFIERS	5
23 9000	HVAC SPECIALTIES	3

DIVISION 25 – INTEGRATED AUTOMATION TABLE OF CONTENTS

SECTION	***TITLE***	***NO. OF PAGES***
25 0500	BASIC MATERIALS AND METHODS	33
25 0630	SCHEDULES	11
25 1000	DIRECT DIGITAL/AUTOMATIC TEMPERATURE CONTROLS	29
25 3523	DDC CFM TRACKING TERMINAL BOXES (VAV, VCV, CV, VVE, CVE Designations)	4
25 5000	INSTRUMENTATION TERMINAL DEVICES	17
25 9000	SEQUENCES OF OPERATION	20

DIVISION 26

ELECTRICAL TABLE OF CONTENTS

SECTION	***TITLE***
260510	ELECTRICAL SPECIAL CONDITIONS
260520	BASIC MATERIALS AND METHODS
260530	WIRING METHODS
260548	VIBRATION AND SEISMIC CONTROLS FOR ELECTRICAL SYSTEMS
260570	POWER SYSTEM STUDIES
260580	ELECTRICAL ACCEPTANCE TESTS
260584	THROUGH PENETRATION FIRESTOP SYSTEMS
260920	LIGHTING CONTROL SYSTEM
261120a	SECONDARY UNIT SUBSTATIONS – NORMAL POWER DOUBLE ENDED
261120b	SECONDARY UNIT SUBSTATIONS – EMERGENCY POWER SINGLE ENDED
262010	LOW VOLTAGE DISTRIBUTION
263010	ELECTRICAL POWER GENERATION
263350	UNINTERRUPTIBLE POWER SYSTEMS
264110	LIGHTNING PROTECTION SYSTEM
264310	SURGE PROTECTIVE DEVICES
265010	LIGHTING FIXTURES

DIVISION 28

ELECTRONIC SAFETY AND SECURITY TABLE OF CONTENTS

SECTION	***TITLE***
283110	FIRE ALARM SYSTEM

DIVISION 27 – COMMUNICATIONS TABLE OF CONTENTS

SECTION	***TITLE***
270510	TELECOMMUNICATIONS

SECTION 210500 – BASIC FIRE PROTECTION MATERIALS AND METHODS

PART 1 - GENERAL

1.1 PROVISIONS INCLUDED

A. Include General Conditions, Supplementary General Conditions Division 0 and applicable parts of Division 1 for conditions and Section 019100 Commissioning and requirements which may affect the work of this Section.

B. Examine all other Sections of the specifications for requirements which affect work under this Section whether or not such work is specifically mentioned in this Section.

C. Coordinate work with that of all other Trades affecting, or affected by work of this Section. Cooperate with such Trades to ensure the steady progress of all work under the Contract.

1.2 DEFINITIONS

A. Words in the singular shall also mean and include the plural, wherever the context so indicates and words in the plural shall mean the singular, wherever the context so indicates.

B. Wherever the terms "shown on drawings" are used in the specifications, they shall mean "noted", "indicated", "scheduled", "detailed", or any other diagrammatic or written reference made on the drawings.

C. Wherever the term "provide" is used in the specifications it will mean "furnish" and "install", "connect", "apply", "erect", "construct", or similar terms, unless otherwise indicated in the specifications.

D. Wherever the term "material" is used in the specifications it will mean any product", "equipment", "device", "assembly", or "item" required under the Contract, as indicated by trade or brand name, manufacturer's name, standard specification reference or other description.

E. The terms "approved" or "approval" shall mean the written approval of the Architect.

F. The term "specification" shall mean all information contained in the bound or unbound volume, including all "Contract Documents" defined therein, except for the drawings.

G. The terms "directed", "required", "permitted", "ordered", "designated", "prescribed" and similar words shall mean the direction, requirement, permission, order, designation or prescription of the Architect. The terms "approved", "acceptable", "satisfactory" and similar words shall mean approved by, acceptable or satisfactory to the Architect. The terms "necessary", "reasonable", "proper", "correct" and similar words shall mean necessary, reasonable, proper or correct in the judgment of the Architect.

H. "Piping" includes in addition to pipe or mains, all fittings, flanges, unions, valves, strainers, drains, hangers and other accessories relative to such piping.

I. "Concealed" means hidden from sight in chases, furred spaces, shafts, hung ceilings, embedded in construction or in crawl spaces.

J. "Exposed" means not installed underground or "concealed" as defined above.

K. "Invert Elevation" means the elevation of the inside bottom of the pipe.

L. "Fire Protection Contractor" shall refer to the Contractor (or his Subcontractors) responsible for furnishing and installation of all work indicated on the Fire Protection drawings and specifications, as applicable and or referenced to each Trade in the Architectural and/or Structural documents.

M. "Architect" shall refer to "Mitchell Giurgola Architects" and/or Engineer "Bard, Rao + Athanas Consulting Engineers, LLC" and/or Owner.

N. “Owner” shall refer to the designated representatives of the Project Owner.

O. “Commissioning Agent (CA)” shall refer to the party employed by the Facility to witness the demonstration of all systems according to the commissioning plan. Refer to Section 019100.

P. “Construction Manager” shall refer to the Construction Manager (CM) for this project.

1.3 CODES, STANDARDS AND REFERENCES

A. All materials and workmanship shall comply with all applicable Codes, Specifications, Local and State Ordinances, Industry Standards and Utility Company Regulations, latest editions.

B. In case of difference between Building Codes, State Laws, Local Ordinances, Industry Standards and Utility Company Regulations and the Contract Documents, the Fire Protection Contractor, as applicable, shall promptly notify the Architect in writing of any such difference.

C. In case of conflict between the Contract Documents and the requirements of any Code or Authorities having jurisdiction, the most stringent requirements of the aforementioned shall govern for budgetary purposes. However, no work will proceed until the Architect determines the correct method of installation.

D. Should any Contractor, as applicable, perform any work that does not comply with the requirements of the applicable Building Codes, State Laws, Local Ordinances, Industry Standards and Utility Company Regulations, he shall bear all costs arising in correcting the deficiencies, as approved by the Architect.

E. Applicable Codes and Standards shall include all State Laws, Local Ordinances, Utility Company Regulations and the applicable requirements of the following accepted Codes and Standards, without limiting the number, as follows:

1. National Fire Protection Association (NFPA) Standards Nos: 13, 14, 20, 24, 25, 45, 70, 72 and NFPA 101, Life Safety Code

2. National Electric Code (NEC)

3. Factory Mutual Data Sheets: 2-8N, 3-7N and 3-26

4. State of Connecticut Building Code – Latest Adopted Edition

5. State of Connecticut Fire Prevention Regulations and Elevator Regulations

6. Local Ordinances, Regulations of the Local Building Department and Fire Department

7. Underwriters Laboratories

8. State Fire Marshall

9. Local Ordinances, Regulations of Local Building Department and Fire Department

F. In these specifications, references made to the following Industry Standards and Code Bodies are intended to indicate the accepted volume or publication of the Standard. All equipment, materials and details of installation shall comply with the requirements and latest revisions of the following Bodies, as applicable:

1. ANSI American National Standards Institute

2. ASME American Society of Mechanical Engineers

3. ASTM American Society of Testing Materials

4. CS Commercial Standards, U.S. Department of Commerce

5. FMG Factory Mutual Global

6. FS Federal Specification, U.S. Government

7. MSS Manufacturers Standardization Society of the Valve and Fittings Industry

8. NEMA National Electrical Manufacturers Association

9. NFPA National Fire Protection Association

10. UL Underwriters' Laboratories, Inc.

G. The Fire Protection Contractor for the work under his charge, shall give all necessary notices, obtain and pay for all permits, pay all governmental taxes, fees and other costs in connection with his work; file for necessary approvals with the jurisdiction under

which the work is to be performed. The Fire Protection Contractor shall obtain all required Certificates of Inspection for his work and deliver same to the Architect before request for acceptance of his portion of work and before final payment is made.

H. All equipment shall be installed per manufacturer's recommendations and requirements. The Fire Protection Contractor shall notify the Architect in writing when they intend to deviate from manufacturer's installation guidelines. The Architect shall advise if the installation is acceptable prior to installation.

1.4 SUBMITTALS

A. Submit detailed shop drawings or brochures for approval of equipment and material proposed to be used on this project. Furnish the number of copies required by the General Conditions.

B. The documents submitted shall show the following:

1. Principal dimensions and details of construction.

2. Operating and maintenance clearances.

3. Weights of principal parts and total weights with information required for the design of supports and foundations.

4. Sizes and location of piping and connections.

5. Performance data, including pump curves.

6. Data on electric motors, including brake horsepower of driven equipment, nameplate ratings and classes, sound data, starting and running full load currents, required starter size and recommended overload heater ratings.

7. Approval stamp of Underwriters' Laboratory, Factory Mutual and other authorities having jurisdiction of Contract Drawings requiring such approval.

8. Certified performance guarantees.

9. Minimum scale for fire protection plans shall be 1/4 inch equal 1 foot.

C. Submit brochures that contain only that information which is relative to the particular equipment or materials to be furnished. Do not submit catalogs that describe several different items other than those items to be used unless irrelevant information is marked out and relevant material is clearly marked.

D. Specifications Compliance Statement

1. The manufacturer shall submit a point by point statement of compliance with the specifications.

2. The statement of compliance shall consist of a list of all paragraphs (line by line).

3. Where the proposed system complies fully, such shall be indicated by placing the word “comply: opposite the paragraph number.

4. Where the proposed system does not comply, or accomplishes the stated function in a manner different from that described, a full description of the deviation shall be provided.

5. Where a full description of a deviation is not provided, it shall be assumed that the proposed system does not comply with the paragraph in question.

6. Submissions which do not include a point by point statement of compliance as specified shall be disqualified.

1.5 GUARANTEE/WARRANTIES

A. Attention is directed to provisions of the General Requirements and Supplementary General Conditions regarding guarantees and warranties for work under this Contract.

B. Manufacturers shall provide their standard guarantees for work under this Contract, unless specified otherwise. However, such guarantees shall be in addition to and not in lieu of all other liabilities which the manufacturer and Prime Contractor may have by Law or by other provisions of the Contract Documents. In any case, such guarantees and warranties shall commence when the Owner accepts the various systems, as applicable and as determined by the Architect. The guarantees and warranties will remain in effect for a minimum period of (1) year thereafter except where longer periods are specifically stated and specified.

C. All materials, items of equipment and workmanship furnished by the Fire Protection Contractor shall carry the warranty against all defects in material and workmanship. Any fault due to defective or improper material, equipment, workmanship or design which may develop shall be made good, forthwith, by and at the expense of the Fire Protection Contractor responsible, including all other damage done to areas, materials and other systems resulting from this failure.

D. The Fire Protection Contractor shall guarantee that all elements of the systems provided under his Contract, are of sufficient capacity to meet the specified performance requirements as set forth herein or as indicated on the drawings.

E. Upon receipt of notice from the Owner of failure of any part of the systems or equipment during the guarantee period, the affected part or parts shall be replaced by the responsible Contractor.

F. The Fire Protection Contractor shall furnish, before the final payment is made, a written guarantee covering the above requirements.

1.6 COMMISSIONING

A. The Fire Protection Contractor(s) must also include sufficient man-hours within their bids, for their participation with the Commissioning Team meetings and overall process

and the rebalancing/readjusting/resetting all device setpoints, as described in Section 019100.

B. Commissioning of a system or systems specified in this section is part of the construction process. Documentation and testing of these systems, as well as training of the Owner's operation and maintenance personnel, is required in cooperation with the Owner's Representative and the Commissioning Agent. Project Closeout is dependent on successful completion of all commissioning procedures, documentation, and issue closure. Refer to Section 019100, Commissioning, for detailed commissioning requirements.

1.7 THE CONTRACTOR

A. The Fire Protection Contractor shall base his bid on site examinations performed by him. This requirement is mandatory. The Fire Protection Contractor shall visit the proposed site where work is scheduled to be performed and ascertain for himself the amount of work required to fulfill the intent of his Contract and the complexity of the installation. The Fire Protection Contractor shall not hold the Architect, his Consultants, agents or employees responsible for or bound by, any schedule, estimate or for any plan thereof. The Fire Protection Contractor shall study all Contract Documents (HVAC, Plumbing, Electrical, Architectural, Structural), etc., included under each Contract, to determine exactly the extent of work to be provided under each Section, and in installing new equipment and systems and coordinating the work with the other Trades and existing conditions.

B. The Fire Protection Contractor shall faithfully execute his work according to the terms and conditions of the Contract and specifications and shall take all responsibility for and bear all losses resulting to him in the execution of his work.

C. The Fire Protection Contractor shall be responsible for the location and performance of work provided under his Contract as indicated on the Contract Documents. All parties employed directly or indirectly by the Fire Protection Contractor shall perform their work according to all the conditions as set forth in these specifications.

D. The Fire Protection Contractor shall furnish all materials and perform all work in accordance with the project specifications and any supplementary documents provided by the Architect. The work shall include every item shown on the drawings and/or required by the specifications as interpreted by the Architect. All work and materials furnished and installed shall be new and of the best quality and workmanship. The Fire Protection Contractor shall cooperate with the Architect so that no error or discrepancy in the Contract Documents shall cause defective materials to be used or poor workmanship to be performed.

1.8 COORDINATION OF WORK

A. The Fire Protection Contractor shall compare his drawings and specifications with those of other Trades and report any discrepancies between them to the Architect and obtain from the Architect written instructions for changes necessary in the mechanical or electrical work, to ensure that all work is installed in coordination and cooperation with other Trades installing interrelated work. Before installation, the Fire Protection

Contractor shall make proper provisions to avoid interferences in a manner approved by the Architect. All changes required in the work of the Fire Protection Contractor caused by his negligence, shall be corrected by him at his own expense, to the Architect's satisfaction.

B. Locations of piping and equipment shall be adjusted to accommodate the new work with interferences anticipated and encountered during installation. The Fire Protection Contractor shall determine the exact routing and location of his systems prior to fabrication or installation of any system component. Accurate measurements and coordination drawings will have to be completed to verify dimensions and characteristics of the various systems' installations.

C. Lines which pitch shall have the right-of-way over those which do not pitch. For example, waste piping shall normally have the right-of-way. Lines whose elevations cannot be changed shall have the right-of-way over lines whose elevations can be changed.

D. Offsets, transitions and changes of direction in all systems shall be made as required to maintain proper headroom and pitch of sloping lines whether or not indicated on the drawings. The Fire Protection Contractor shall provide drains as required for his work to affect these offsets, transitions and changes in direction, as applicable.

E. All work shall be installed in a way to permit access (without damage to other parts) of valves, connections and all other system components provided under this Contract requiring periodic replacement or maintenance. All piping shall be arranged in a manner to clear the openings of swinging overhead access doors, ceiling tiles and cleaning access doors in ductwork.

1. Fire rated access doors/panels with closers shall be provided for all rated assemblies.

F. The Contract Drawings are diagrammatic only intending to show general runs and locations of piping, valves, equipment and specialties and not necessarily showing all required offsets, details and accessories and equipment to be connected. All work shall be accurately laid out with other Trades to avoid conflicts and to obtain a neat and workmanlike installation which will afford maximum accessibility for operation, maintenance and headroom.

G. Where discrepancies in scope of work as to what Trade provides items, such as starters, disconnects, flow switches, electric control components, etc., exist, such conflicts shall be reported to the Architect prior to signing of the Contract. If such action is not taken, the Fire Protection Contractor, as applicable, shall furnish such items as part of his work, for complete and operable systems and equipment, as determined by the Architect.

H. Where drawing details, plans and/or specification requirements are in conflict and where pipe is shown to be different between plans and/or between plans and sections or details, the most stringent requirement will be included in the Contract. Fire Protection systems and equipment called for in the specification and/or shown on the drawings shall be provided under this Contract as if it were required by both the drawings and

specifications. However, prior to ordering or installation of any portion of work which appears to be in conflict, such work shall be brought to Architect's attention for direction as to what is to be provided.

I. Final location of all sprinkler heads and devices shall be coordinated with the Architect's reflected ceiling plans, elevation plans and/or other Architectural details, as applicable. Sprinkler head locations shall provide the specified coverage rating and water flow density and shall be in accordance with all applicable codes and be in full compliance with the requirements of the Owner's insurance carrier. Offsets of piping, added fittings, valves, elbows, flexible connections, etc., shall be provided as required to comply with the Architectural floor plans, elevation plans and/or installation details. Obtain approval of locations of all devices from Architect in the field, prior to installation.

1.9 COORDINATION DRAWINGS

A. Before materials are purchased, fabricated or work is begun, the Fire Protection Contractor shall prepare coordination drawings in cooperation with all trades for all floors/areas, including buried systems/services (all-Trade-composite at 1/4" scale), showing the size and location of his equipment and lines, in the manner described herein under General Requirements.

B. The HVAC Contractor shall take the lead in the coordination drawing process to produce the Architectural backgrounds. A detailed drawing schedule shall be produced to conform to the scale drawing requirements as herein listed and submitted for review. Coordination drawings are for the CM and Architects/Engineer use during construction and shall not be construed as shop drawings or as replacing any shop drawings. The coordination drawings, when corrected for actual "as-built" conditions, will be reviewed by the Architect, corrected and become the Record Drawings to be submitted to the Owner for his use.

C. The cost of producing and reproducing the drawings will be included under the Contract of each Trade, including the cost or preparation of the Architectural building outlines. This process may include multiple revisions to these drawings which will be included in the cost. The intent is to provide a fully coordinated set of documents between trades no matter how many times they may have to be redone. The HVAC Contractor shall take the lead to produce the Architectural backgrounds, show all ductwork, piping, etc., and circulate the drawings to any of his Subcontractors and the other Trades (Plumbing, Fire Protection, Electrical, etc.), so that they can indicate all their work as directed by the CM and Architect as required, to result in a fully coordinated installation.

D. In addition to the regular coordination drawing review, the fire protection work will also be reviewed by the Architect to ensure that the system and equipment arrangements are suitable to provide maintenance access and service as follows:

1. All sprinkler heads shall be coordinated utilizing the reflected ceiling plan.

2. All sprinkler heads shall be coordinated with all other trades.

3. Valves shall be grouped where possible and positioned in accessible locations.

E. Prepare a complete set of computer based drawings:

1. Format shall be:

a. REVIT (Latest Version)

2. Scale not less than 1/4" scale equals 1'-0", showing basic layout for the structure and other information as needed for preparation of Coordination Drawings.

3. The drawings shall indicate the layout of all specialty tradework as indicated herein and shall be designated as Coordination Drawings.

4. Any drawing provided to assist the Contractor will require:

a. A signed liability release form will be required from the Contractor prior to the release of the disk from the Engineer.

5. For 3-D projects see Section 230510 “3D Building information” for additional information

F. Highlight all fire rated partitions on the Coordination Drawings for appropriate coordination.

G. The main paths for the installation or removal of all MEP & FP equipment from mechanical and electrical rooms shall be clearly indicated on the Coordination Drawings.

H. Each of the specialty trades shall add its work to the base drawings with appropriate elevations and grid dimensions. Specialty trade information shall be required for mechanical rooms, crossovers and for spaces above ceilings where congestion of work may occur such as corridors and, where required, entire floors. Drawings shall indicate horizontal and vertical dimensions to avoid interference with structural framing, ceilings, partitions and other services. Indicate elevations relative to finish floor for bottom of piping. Sections shown in the contract drawings are diagrammatic only and all trades shall share and coordinate sectional views used.

1. Specialty Trade shall include:

a. Plumbing system
b. HVAC piping and associated control systems
c. Electrical
d. Sheet metal work
e. Fire protection system
f. Automatic temperature control
g. Fire alarm
h. Security
i. Telecommunications
j. Pneumatic tube

k. Commissioning

I. Upon completing their portion of the Coordination Drawings, each specialty trade shall sign, date and submit the Coordination Drawings to the CM, Architect/Engineer for review.

J. Where conflicts occur with placement of materials of various trades, the CM shall be responsible to coordinate the available space to accommodate all trades. Any resulting adjustments shall be initialed and dated by the affected specialty trade Contractor. The CM shall then final date and sign each drawing.

K. Fabrication of materials shall not start until Coordinate Drawings have been signed, reviewed, and distributed to all parties as indicated herein.

L. Distribution of Coordination Drawings: (Modified for clarification)

1. The CM shall provide one print of each Coordination Drawing to:

a. Each specialty trade Subcontractor.
b. Owner.
c. General Contractor.
d. Architect (for record purposes).
e. Engineer.

M. After Distribution

1. Resolve all interferences not previously identified.

N. Coordination Drawings shall include, but are not necessarily limited to:

1. Structure. (Beams, cross bracing, columns etc.).

2. Partition/room layout, including indication of smoke and fire resistance rated partitions.

3. Ceiling layout and heights.

4. Light fixtures.

5. Access panels.

6. Sheet metal, heating coils, heat pumps, grilles, diffusers, duct flanges, and pipe hanger/supports and pipe support steel, guides, expansion compensators, kitchen exhaust access doors, and take-offs from the duct risers, etc.

7. All heating piping and valves.

8. Smoke and fire dampers including access doors.

9. Soil, waste and vent piping.

10. Major water and gases.

11. Major electrical, fire alarm, and security conduit runs (All sizes), panelboards, feeder conduit and racks of branch conduit (All). Motor control centers, starters and disconnects including shaft coordination for larger conduit riser junction boxes to ensure access for JBs and JBs sized to access all cables, and access to splice cables.

12. Sprinkler piping and heads.

13. All equipment, including items in the Contract as well as O.F.C.I. and O.F.I. items.

14. Equipment located above finished ceiling requiring access for maintenance and service. In locations where acoustical lay-in ceilings occur indicate areas in which the required access area may be greater than the suspended grid systems.

15. Rainwater piping

16. Existing conditions, including but not limited to, Mechanical, Plumbing, Fire Protection and Electrical items.

17. ATC panels

18. Cable tray

19. Beam Penetrations

O. All shaft coordination drawings shall be detailed with the appropriate sizes for all ducts, HVAC pipe, conduits, fire protection piping & Plumbing waste, vent, water, gases, etc. Hanger support types, miscellaneous support steel shall be detailed to allow for proper clearances and appropriate insulation thickness. Shaft coordination drawings shall be submitted for review in plan and elevation views.

P. The Architect's response to all requests for information (RFI's) generated by the trade contractors shall be distributed to all other affected trades as if this information was contained in the original contract documents. In other words, the party that issues an RFI is responsible for distributing the information to all affected parties.

Q. The Fire Protection Contractor must include in his bid sufficient dollar amounts to coordinate the work of this Contract. This project is complex and will require additional time to coordinate all Trades and allow implementation of the Owners Standards and maintenance serviceability requirements. This requirement shall include, but not be limited to, producing the coordination drawings, as many times and as many drawings as required, to ensure serviceability of equipment, as approved by the Architect.

1.10 RECORD DRAWINGS

A. The Fire Protection Contractor shall maintain, current at the site, a set of Contract Drawings for his portion of the work on which he shall accurately show the actual

installation of all work provided under his Contract indicating any variation from the Contract Drawings, in accordance with the General Conditions and Supplementary General Conditions. Changes whether resulting from formal change orders, requests for information, or other instructions issued by the Architect shall be recorded. Include changes in sizes, location and dimensions of piping, ducts, equipment, etc.

B. The Fire Protection Contractor shall indicate progress by coloring-in various pipes and associated appurtenances exactly as they are erected. This process shall incorporate both the changes noted above and all other deviations from the original drawings whether resulting from job conditions encountered or from any other causes.

C. The marked-up and colored-up prints will be used as a guide for determining the progress of the work installed. They shall be inspected periodically by the Architect and Owner's representatives and they shall be corrected if found either inaccurate or incomplete. This procedure is mandatory. Marked up drawings shall include all flow diagrams, schedules, details and control diagrams.

D. The Fire Protection Contractor shall meet at a minimum on a monthly basis, with the Owner's representative to transfer the information from his Fire Protection marked-up and colored-up prints to a set which will become the basis for preparation of as-built drawings.

E. Upon completion of the project, each Contractor shall submit his marked-up drawings to the Architect for review and comment. After the Architect reviews and comments on this set of documents, each Contractor shall prepare as-built drawings on CAD using the format specified for coordination drawings. When the work is completed, each Contractor shall provide 2 hard copies to the Architect for submittal to the Owner and disks with all documentation and a set of reproducible drawing plots marked "As-Built" drawings. The Contractor shall bear all costs of producing the CAD "As-Built" drawings, providing all necessary drawing changes and printing the reproducible drawings for the work under his charge.

1.11 GIVING INFORMATION

A. The Fire Protection Contractor shall keep himself fully informed as to the shape, size and position of all openings required for his apparatus and shall give information to the Architect and other Contractors sufficiently in advance of the work so that all openings may be built in advance.

1.12 EQUIPMENT AND MATERIALS

A. Equipment and materials shall be delivered to the site and stored in original sealed containers, suitably sheltered from the elements, but readily accessible for inspection by the Architect until installed. All items subject to moisture damage such as controls, motors, etc., shall be stored in dry, heated spaces.

B. The Fire Protection Contractor shall have his equipment tightly covered and protected against dirt, water and chemical or mechanical injury and theft. At the completion of the work, equipment and materials shall be cleaned, polished thoroughly and turned over to the Owner in a condition satisfactory to the Architect. Damage or defects developing

before acceptance of the work shall be made good at the Fire Protection Contractor's expense as applicable.

C. The Fire Protection Contractor shall make necessary field measurements to ascertain space requirements, for equipment and connections to be provided under his Trade and shall furnish and install such sizes and shapes of equipment to allow for the final installation to conform to the drawings and specifications.

D. Manufacturers' directions shall be followed completely in the delivery, storage, protection and installation of any equipment. Promptly notify the Architect in writing of any conflict between any requirements of the Contract Documents and the manufacturer's directions and obtain the Architect's written instructions before proceeding with the work. Should any Contractor perform any work that does not comply with the manufacturer's directions or written instructions from the Architect, he shall bear all costs arising in correcting any deficiencies that should arise.

E. The Fire Protection Contractor shall furnish and install all equipment, accessories, connections and incidental items necessary to fully complete the work under his Contract for use, occupancy and operation by the Owner.

F. Where equipment of the acceptable manufacturers requires different arrangement or connections from those shown, it shall be the responsibility of the Fire Protection Contractor to install the equipment to operate properly and in harmony with the original intent of the drawings and specifications. When directed by the Architect, the Fire Protection Contractor shall submit drawings showing the proposed installation. If the proposed installation is approved, the Fire Protection Contractor shall make all necessary changes in all effected related work provided under other Sections including location of roughing-in connections by other Trades, electrical requirements, piping, supports, insulation, etc. All changes shall be made at no increase in the Contract amount or additional cost to the other Trades and/or Owner.

G. All equipment and materials required for installation under these specifications shall be new and without blemish or defect. Equipment and materials shall be products which will meet with the acceptance of the Authorities having jurisdiction over the work and as specified hereinbefore. Where such acceptance is contingent upon having the products listed or labeled by FM, UL or other testing laboratories, the products shall be so listed or labeled. Where no specific indication as to the type or quality of material or equipment is indicated, a first class standard article shall be provided.

H. All equipment of one type (such as valves, sprinklers, etc.), shall be the product of one manufacturer.

I. Equipment pre-purchased on behalf of the Owner or by the Owner himself, if assigned to any of the Contractors, shall be received, inspected, installed, etc., as if it was purchased by the Contractors as applicable. All guarantees, service contracts, etc., shall be the same as for all other equipment provided under this Contract.

1.13 CUTTING AND PATCHING

A. The Fire Protection Contractor shall be responsible for all core drilling, as required for work under his Contract, but in no case shall he cut into any structural elements without the written approval of the Architect. For additional requirements, refer to Division One of the General Requirements.

B. All cutting, rough patching and finish patching, shall be provided under this Contract.

C. All concrete and masonry equipment bases and pads shall be provided under this Contract.

1.14 USE OF PREMISES

A. The Fire Protection Contractor shall confine all of his apparatus, storage of materials and construction to the limits indicated on the drawings and directed by the Architect and he shall not encumber the premises with his materials.

B. In storing materials within areas (structure or ground), or when used as a shop, the Fire Protection Contractor shall consult with the Prime Contractor and shall restrict his storage to space designated for such purposes. The Fire Protection Contractor will be held responsible for repairs, patching or cleaning arising from any unauthorized use of premises.

C. Notwithstanding any approvals or instructions which must be obtained by the Fire Protection Contractor from the Architect in connection with use of premises, the responsibility for the safe working conditions at the site shall remain the Fire Protection Contractor's. The Architect or Owner shall not be deemed to have any responsibility or liability in connection therewith.

1.15 PROTECTION

A. All materials such as valves, fittings, piping, etc. shall be properly protected and all piping openings shall be temporarily closed by the Fire Protection Contractor [or Subcontractor's] installing same, so to prevent obstruction and damage. The Fire Protection Contractor shall take precautions to protect his materials from damage and theft.

B. The Fire Protection Contractor shall furnish, place and maintain proper safety guards for the prevention of accidents that might be caused by the workmanship, materials, equipment or electrical systems provided under his Contract.

1.16 DAMAGE CORRECTION AND EXTRA WORK

A. The Fire Protection Contractor shall be held responsible and shall pay for all damages caused by his work to the new and existing building structures and new and existing equipment, piping, duct systems, etc., and all work and finishes installed under this Contract in the new or in existing building. Repair of such damage shall be done as herein before specified, at the expense of the Fire Protection Contractor and to the Architect's satisfaction.

B. The Fire Protection Contractor shall promptly correct all work provided under his Contract and rejected by the Architect as defective or as failing to conform to the Contract Documents whether observed before or after completion of work and whether or not fabricated, installed or completed. The Fire Protection Contractor shall bear all costs of correcting such rejected work.

C. No claim for extra work will be allowed unless it is authorized by the Architect in writing before commencement of the extra said work.

1.17 TOUCH-UP PAINTING

A. The Fire Protection Contractor shall thoroughly clean all equipment and systems provided under this Contract from rust, splatters and other foreign matter or discoloration, leaving every part of each system in an acceptable prime condition. The Fire Protection Contractor, for the work under his Contract, shall refinish and restore to the original condition all equipment and piping which has sustained damage to the manufacturer's prime and finish coats of paint and/or enamel.

1.18 HOUSEKEEPING PADS

A. The Fire Protection Contractor shall coordinate housekeeping pads for:

1. All floor supports or braces

B. Pads shall be 4" high above the finished floor.

C. Each pad shall be a minimum of 6" larger then the equipment, support or isolation base in all directions.

D. Pads shall be formed, poured with concrete, and tooled by the General Contractor.

E. Pads shall not be poured until after the M.E.P. coordination drawings are completed.

1.19 PIPE SLEEVES, PLATES AND ESCUTCHEONS, FIRESTOPPING AND SMOKEPROOFING

A. Where piping pass through masonry or concrete walls or floors, the Fire Protection Contractor shall provide and set individual sleeves for each pipe and all other work under his charge, as necessary for passage of all pipes. Sleeves shall be of sufficient size to provide 1/2" air space around the pipe passing through. All openings shall be sealed, smokeproofed and made tight. The Fire Protection Contractor shall be responsible for the exact location of sleeves provided under his Contract and shall coordinate all requirements for piping sleeves. In the event that failure to do so requires cutting and patching, it shall be done at this Contractor’s expense.

B. The Fire Protection Contractor, for work under his charge, shall determine the required inside diameter of each individual wall opening or sleeve before ordering, fabrication or installation.

C. Sleeves passing through lightproof or soundproof walls and floors and through firewalls shall be sealed and made tight using only approved materials and methods.

D. Sleeves and inserts shall not be used in any portions of the building, where their use would impair the strength or construction features of the building. Elimination of sleeves must be approved by the Architect.

E. Provide chrome plated brass escutcheons with set screw for exposed piping, in all areas except in mechanical rooms. In this area use plain brass or cast iron escutcheons suitable for painting. All escutcheons shall be sized to fit the bare pipe or insulation in a snug and neat manner. They shall be of sufficient size to cover sleeved openings for the pipes and of sufficient depth to cover sleeves projecting above floors. Escutcheons shall be as manufactured by Beaton & Caldwell, Dearborn Brass, or Grinnell. All escutcheons shall be of one piece construction.

F. Pipe sleeves shall be made of Schedule 40 pipe, 20 gauge galvanized steel or 16 gauge steel as follows:

1. Sleeves on pipes passing through masonry or concrete construction shall be Schedule 40 pipe.

2. Sleeves on pipes passing through drywall construction shall be 20 gauge galvanized steel.

3. Sleeves on pipes passing through fire rated partitions shall be 16 gauge steel.

G. Pipe sleeves shall be set as follows:

1. Set sleeves 1" above finish floor, (except set sleeves, 6" above finish floor at penthouses or mechanical rooms and 6” above finished roof) and flush on each side of walls. Coordinate roof penetrations with roofing Contractor.

2. Sleeves shall be set securely in place before concrete is poured when placed in concrete construction.

H. The Fire Protection Contractor shall firestop or smoke stop the space between the sleeves provided under his Contract and piping as applicable, as follows:

1. See Specification Section 210584 – Through-Penetration Firestopping System

I. Except as otherwise specified, underground piping passing through exterior walls or foundation slabs on grade, shall have penetration closures of the modular mechanical type, consisting of interlocking synthetic rubber links shaped to continuously fill the annular space between the pipe and wall opening. Links shall be loosely assembled with bolts to form a continuous belt around the pipe and with a pressure plate under each bolt head and nut. After the seal assembly is positioned in the sleeve, tightening of the bolts shall cause the rubber sealing elements to expand and provide an absolutely watertight seal between the pipe and wall, reducing chances of cathodic reaction between these members. The Fire Protection Contractor for work under his charge shall determine the required inside diameter of each individual wall opening or sleeve before ordering,

fabrication or installation. The inside diameter of the wall opening shall be sized to fit the pipe and ensure a watertight joint. Where applicable, when installing seals, take into account the pipe O.D. if non-standard due to coating or jacketing.

1.20 MISCELLANEOUS IRON AND STEEL

A. Each trade shall provide all primary and secondary steel supports and hangers as shown on the drawings and/or as required to support equipment, piping or any other materials provided under the work of this Section.

B. The work of this Section of designing, furnishing and installing all miscellaneous metal work associated with the system, and related items as indicated on the drawings and/or as specified herein, and includes, but is not limited to the items listed herein below.

C. The scope of work shall include:

1. Intermediate beams to hang piping from the roof. All piping must be hung from beam or supported from the floor.

2. Support of piping in shafts in addition to support provided by structure.

3. Pipe anchors in the building.

4. Hangers, brackets, angel irons or rods required for the support and protection of fire protection equipment.

5. Field prime painting of galvanized steel and field finish painting.

D. Shop Drawings for General Miscellaneous Items

1. Submit Shop Drawings of all miscellaneous metal items to Architect for approval, showing sizes and thickness of all members, types of materials, methods of connection and assembly, complete dimensions, clearances, anchorage, relationship to surrounding work by other Trades, shop paint, and other pertinent details of fabrication and installation.

E. Samples

1. Submit duplicate samples of all materials to be furnished under this Section if, and in size and form, requested by Architect.

F. Do not order materials or begin fabrication until Architect's approval of submittals has been obtained.

G. In addition to the governing laws and codes, the following Specifications and Codes form a part of this Specification:

1. American Iron and Steel Institute applicable standards.

2. American Institute of Steel Construction "Code of Standard Practice for Steel Buildings and Bridges" and "Specifications for the Design, Fabrication and Erection of Structural Steel for Buildings".

3. American Welding Society Code: Standard Code for Arc and Gas Welding in Building Construction.

H. All materials shall be new stock, free from defects impairing strength, durability or appearance and of best commercial quality for each intended purpose.

1. Unless other wise specifically called for, work of this Section shall be fabricated of structural steel conforming to ASTM Specification A36.

2. Steel pipe shall be seamless steel pipe conforming to ASTM Specification A53, Schedule 40.

3. Steel tubing shall be seamless steel tubing conforming to ASTM Specifications A500 to A501.

4. Construction specialties such as slotted inserts, wedge inserts, etc., shall be as manufactured by Hohmann and Barnard, Gateway Erectors, Inc., Richmond Screw Anchor Co., or equal approved by Architect.

5. Non-ferrous metals shall be as specified under descriptions of specific items, herein below.

I. Provide all anchors, bolts, sockets, sleeves, and other parts required for securing each item of work of this Section to the construction, including furnishing to concrete workers all required insets and sleeves for use at concrete.

1. All exposed fastenings shall be of the same material and finish as the metal to which applied, unless otherwise noted.

2. Welding rods shall conform to AWS Standards and the recommendation of the welding rod manufacturer.

3. Shop primer for other ferrous surfaces shall be a high-quality, lead-free, rust-inhibitive primer, Tnemec No. 10-99 Metal Primer or equivalent by Devoe and Raynolds Co., Carboline or equal.

J. Metal surfaces shall be clean and free from mill scale, flake, rust and rust pitting. Metal work shall be well formed and finished to required shape and size, true to details, with straight, sharp lines and angles and smooth surfaces. Curved work shall be true radii. Exposed sheared edges shall be eased.

K. Weld all permanent connections. Welds shall be continuous on all exposed surfaces and where required for strength on concealed surfaces. Exposed welds shall be ground flush and smooth, with voids filled with metallic filling compound (metallic filling compound not permitted on surfaces to receive hot-dip galvanizing). Tack-welding will not be permitted unless specifically called for. Do not use screws or bolts where they can be

avoided. Where used, heads shall be countersunk, screwed up tight, and threads nicked to prevent loosening.

L. Fastenings shall be concealed where practicable. Thickness of metal and details of assembly and supports shall give ample strength and stiffness. Joints exposed to weather shall be formed to exclude water.

M. Do all cutting, punching, drilling and tapping required for attachment of anchor bolts and other hardware and for attachment of work by other Trades. All such cutting, punching, drilling, etc., shall be done prior to hot-dip galvanizing of the various components.

N. Live loads shall be not less than the minimum required by law. Where specific live load are not set forth in the laws and codes applicable to this work, and are not given on the Drawings or in this Specification, designs shall be such as to support the live loads which may normally be imposed without failure, without deflection of more than 1/360 of length of any member, and without permanent deformation, all with a factor of safety of not less than 2 1/2 to 1.

O. Shop Painting

1. All ungalvanized ferrous metals under this Section shall be given a shop coat of rust inhibitive primer of type specified above.

a. Immediately before shop painting, remove all rust, loose mill scale, dirt, weld flux, weld spatter, and other foreign material with wire brushes and/or steel scrapers. Power tool clean in accordance with SSPC SP-3 (Power Tool Cleaning). Remove all grease with oil by use of solvent recommended by paint manufacturer. Sandpaper exposed surfaces as required to produce smooth, even finishes.

b. Apply paint by spray process in strict accordance with manufacturer's printed instructions to uniform thickness(es) recommended by manufacturer. Apply thoroughly and evenly and work well into corners and joints taking care to avoid sags and runs.

c. Do not paint surfaces to be embedded in concrete, or to be welded in the field. After field welds are complete, grind smooth and flush, thoroughly clean and then apply specified primer over all unprimed in the field by brush roller.

d. After erection, sand smooth and retouch all portions of the shop coats chipped or damaged during erection, and coat all field welds and connections with primer equivalent to that used for the shop coat.

P. Installation

1. All materials shall be carefully handled and stored under cover in manner to prevent deformation and damage to the materials and to shop finishes, and to

prevent rusting and the accumulation of foreign matter on the metal work. All such work shall be repaired and cleaned prior to erection.

2. Work shall be erected square, plumb and true, accurately fitted, and with the tight joints and intersections. All anchors, inserts and other members to be set in concrete or masonry shall be furnished loose by this Trade to be built-into concrete and masonry and by those Trades as the work progresses. Later cutting or drilling shall be avoided wherever possible.

3. Where members, other than expansion bolts or inserts, are fastened into concrete, set such members in holes formed as specified below, and secure permanently in place by installation of proprietary-type expanding grout manufactured specifically for such purpose, used strictly in accordance with manufacturer's directions. Holes to receive members shall be formed with galvanized sheet metal sleeves, expanded polystyrene foam, or other approved method to provide at least 1/2 inch clearance around entire perimeter. At exposed applications, hold expanding grout back 1/2 inch from finish surface and fill voids with Portland cement grout to match color and texture of surrounding concrete surface.

4. Electrolytic Isolation

a. Where dissimilar metals are to come into contact with one another, isolate by application of a heavy coating of bituminous paint on contact surfaces in addition to shop coat specified above. Do not permit the bituminous paint in any way to remain on surfaces to be exposed or to receive sealant.

Q. Piping supports shall be coordinated with the building structure and shall span between roof beams as required.

1.21 WATERPROOFING, FLASHING AND COUNTERFLASHING

A. Unless specifically indicated otherwise on the drawings, the Fire Protection Contractor shall provide all counterflashing and waterproofing of all piping, drains and equipment provided by him, which pierce roofs, walls and other weatherbarrier surfaces. All work under this paragraph shall be coordinated with the CM.

B. All work shall be performed in a workmanlike manner to ensure weatherproof installation. Any leaks developed due to the Fire Protection Contractor's work shall be repaired at his expense, to the Architect's satisfaction.

C. Pipes passing through slabs shall have the sleeve extended above floors as hereinbefore specified to retain any water and the space between the pipe and sleeve caulked waterproof fire stopping. The top and the bottom shall be sealed with monolastic caulking compound.

D. All flashing required for piping penetrations shall be provided by the CM.

1.22 IDENTIFICATION OF MATERIALS

A. See Division 211000.

1.23 VALVE TAGS, NAMEPLATES AND CHARTS

A. See Division 211000.

1.24 ELECTRICAL WORK, MOTORS AND MOTOR CONTROLLERS

A. See Division 26 for Electrical.

1.25 PARTS LIST AND INSTRUCTIONS FOR OPERATION AND MAINTENANCE

A. The Fire Protection Contractor shall thoroughly instruct the representative(s) of the Owner, to the complete satisfaction of the Architect, in the proper operation of all systems and equipment provided by him. The Fire Protection Contractor shall make arrangements, via the CM as to whom the instructions are to be given in the operation of the basic and auxiliary systems and the periods of time in which they are to be given. The Architect shall be completely satisfied that the representative of the Owner has been thoroughly and completely instructed in the proper operation of all systems and equipment before final payment is made. If the Architect determines that complete and thorough instructions have not been given by the Fire Protection Contractor to the Owner's representative, then the Fire Protection Contractor shall be directed by the Architect to provide whatever instructions are necessary until the intent of this paragraph of the specification has been complied with. All time required for Owner's instruction to satisfy the above requirements shall be included in this Contract. No extra compensation for such instructions will be allowed.

B. The Fire Protection Contractor shall provide operating and maintenance data in accordance with the Specification. All data and literature furnished shall be specific for the make and model of the equipment furnished. General non-specific catalog data will not be acceptable. Information shall indicate possible problems with equipment and suggested corrective action. The manuals shall be indexed for each type of equipment. Each section such as valves, fire pump, sprinklers, etc., shall be clearly divided from the other sections. A sub-index for each section shall also be provided. The methodology of setting-up the manuals shall be submitted to the Architect and Owner through the Prime Contractor for approval prior to final submission of manuals.

C. The instructions shall contain information deemed necessary by the Architect and shall include, but not be limited to, the following:

1. Instructional classes on equipment and systems operation for Owner's representative and maintenance personnel, by engineering staff of each Contractor. Minimum of 48 hours of instruction for minimum of (6) people. Instruction shall include:

a. Explanation of manual and its use.

b. Summary description of the HVAC systems.

c. Purpose of systems.

2. System

a. Detailed description of all systems.

b. Illustrations, schematics, block diagrams, catalog cuts and other exhibits.

3. Operations

a. Complete detailed, step-by-step, sequential description of all phases of operation for all portions of the systems, including start-up, shutdown, adjusting and balancing. Include all posted instruction charts.

4. Maintenance

a. Parts list and part numbers.

b. Maintenance, lubrication and replacement charts and manufacturer's recommendations for preventive maintenance, as applicable to his work.

c. Troubleshooting charts for systems and components.

d. Instructions for testing each type of part.

e. Recommended list of on-hand spare parts.

f. Complete calibration instructions for all parts and entire systems.

g. Instruction for charging, filling, draining and purging, as applicable.

h. General or miscellaneous maintenance notes.

5. Manufacturer's Literature

a. Furnish complete listing for all parts required for models actually furnished.

b. Names, addresses and telephone numbers of manufacturers and suppliers.

c. Describe and operation of all models actually furnished.

d. Furnish all and only pertinent brochures, illustrations, drawings, cuts, bulletins, technical data, certified performance charts and other literature with the model actually furnished to be clearly and conspicuously identified.

e. Internal wiring diagrams and engineering data sheets for all items and/or equipment furnished under each Contract.

f. Guarantee and warranty data.

6. Each Contractor shall furnish instructions for lubricating each piece of equipment installed by him. Instructions shall state type of lubricant, where and how

frequently lubrication is required. Frame instructions under glass and hang in a location as directed by Architect.

1.26 MANUFACTURER'S REPRESENTATIVE AND START-UP OF SYSTEMS

A. The Fire Protection Contractor shall provide, at appropriate time or as directed by the Architect, the on-site services of a competent factory-trained Engineer or authorized representative of particular manufacturer of equipment provided under his Contract, such as for the sprinkler system, fire pumps, etc. provided under this Contract, to instruct the Owner, inspect, adjust and place in proper operating condition any item provided by him, as applicable.

B. The Fire Protection Contractor, as applicable, shall start up and set in operating condition all major equipment and systems, such as the fire pump, etc., in the presence of the applicable equipment manufacturer's representatives, and the Owner and Architect's representatives. In no case will major systems and equipment be commissioned by any of the Contractor's forces alone, without the assistance or presence of the equipment manufacturers.

C. A written report shall be issued by the particular equipment manufacturer and the Fire Protection Contractor summarizing the results of the start up and performance of each system for the Architect's record. No additional compensation will be allowed for any Contractor for such services.

D. The Fire Protection Contractor shall prepare and submit to the Architect for acceptance, a schedule of anticipated system commissioning. No system shall be commissioned without prior acceptance of the schedule by the Architect and Owner. No system shall be commissioned prior to submittal and acceptance of the operations and maintenance manuals.

1.27 CONNECTIONS TO EQUIPMENT

A. The Fire Protection Contractor shall provide all pipe connections, drains, relief valves, power connections, etc., to make equipment operable, as provided under other Sections of the specifications, as shown on the Architectural and/or each Trade's drawings and herein specified, including final connections to equipment to result in a complete system, fully operational. Coordinate location of all equipment with Architect. Obtain installation diagrams and methods of installation of all equipment from manufacturers. Follow instructions strictly. If additional information is required, obtain same from Architect. If equipment is indicated on the Architectural drawings, it shall also be construed and understood by the Fire Protection Contractor to be constructed as shown on the Fire Protection drawings and shall be fully serviced and connected at no extra cost to the Owner.

1.28 ELECTRICAL ROOM REQUIREMENTS

A. The Fire Protection Contractors shall not install any piping or equipment in or through electrical rooms, transformer rooms, electrical closets, telephone rooms or elevator machine rooms, unless piping or equipment is intended to serve these rooms. If any

Contractor violates this requirement, he shall remove and/or relocate all items as required at his expense and to the satisfaction of the Architect.

1.29 HOISTING EQUIPMENT AND MACHINERY

A. All hoisting equipment and machinery required for the proper and expeditious prosecution and progress of the work under this Contract shall be furnished, installed, operated and maintained in safe condition by the Fire Protection Contractor for his material and/or equipment delivered to the designated hoisting area. All costs for hoisting operating services shall be borne by the Fire Protection Contractor for all equipment and work under his charge.

1.30 STAGING

A. All staging, exterior and interior, required to be over 8'-0" in height shall be furnished and erected by the Fire Protection Contractor for work under his charge and maintained in safe condition by him for proper execution of his work.

1.31 PHASING, DEMOLITION AND MAINTAINING EXISTING SERVICES

A. During the execution of the work, required relocation of existing equipment and systems in the existing areas where new work and connections are scheduled to be made shall be performed by the Fire Protection Contractor as indicated on the drawings, as required by the job conditions and as determined by the CM in close cooperation with the Architect and Owner's designated representative to facilitate the installation of the new systems and completion of this Contract. The Owner will require the continuous operation of all existing systems while demolition relocation work of new tie-ins is being performed. Outages required for construction purposes shall be scheduled for the shortest practical periods of time, in coordination with the Owner's designated representative for specific, mutually agreeable periods of time after each of which the interruption shall cease and service shall be restored. This procedure shall be repeated to suit the Owner's working schedule as many times as required until all work is completed.

B. Prior to any deactivation and relocation, capping, valving, tie-in or demolition work, consult the drawings and arrange a conference with the Architect and the Owner's representative in the field to inspect each of the items to be deactivated, removed or relocated. Care shall be taken to protect all equipment designated to be relocated and reused. Give notice to all parties, with a minimum of (10) working days in advance.

C. All draining of existing systems, filling and venting required to remove and relocate existing piping systems shall be included and provided under this Contract as required to perform the various equipment or piping relocations or new tie-ins.

D. Except as otherwise noted, all deactivation, safe capping, valving, etc., of systems designated to be demolished shall be provided by the Fire Protection Contractor, as applicable, and all demolition, removal and disposal of demolished materials shall be performed by the CM. All equipment scheduled to be removed shall be inspected by the Owner, and, if he decides that such equipment is to be salvaged, the Fire Protection

Contractor shall deliver said equipment to an area within the site boundaries as determined by the Owner and Architect.

E. The phasing of the work shall be performed in strict accordance with the CM construction schedule. The new systems will be installed and completely commissioned prior to occupancy. Coordinate requirements for temporary heat or rerouting of existing services as required to accomplish the construction schedule.

F. The Fire Protection Contractor shall be responsible for shutting down, draining and demolition of the existing system as required. All work shall be done during the day and the system shall be placed back in operation prior to the end of the day. If system cannot be operational, then the Fire Protection Contractor shall be required to provide fire watch.

G. The Fire Protection Contractor shall follow the Owner's Shut-down Notification Procedures.

PART 2 - PRODUCTS

2.1 NOT USED

PART 3 - EXECUTION

3.1 NOT USED

END OF SECTION 210500

SECTION 210584 – THROUGH-PENETRATION FIRESTOP SYSTEMS

PART 1 – GENERAL

1.1 RELATED DOCUMENTS

A. Drawings and general provisions of the Contract, including General and Supplementary Conditions, Section 210500 and Division 1 Specification Sections, apply to this Section.

1.2 WORK INCLUDED

A. Through-penetration firestop systems for penetrations through the following fire-resistance-rated assemblies, including both empty openings and openings containing penetrating items:

1. Floors
2. Roofs
3. Walls and partitions
4. Smoke barriers
5. Construction enclosing compartmentalized areas.
6. Other rated assemblies.

1.3 RELATED SECTIONS

A. Examine all drawings and criteria sheets and all other Sections of the Specifications for requirements which affect work under this Section whether or not such work is specifically mentioned in this Section.

1. Section 210500 – Basic Fire Protection Materials and Methods
2. Section 211000 – Fire Protection

1.4 REFERENCES

A. American Society for Testing and Materials Standards (ASTM):

1. ASTM E84: Standard Test Method for Surface Burning Characteristics of Building Materials

2. ASTM E814: Standard Test Methods for Fire Tests of Through-Penetration Firestops

3. ASTM E119: Standard Test Methods for Fire Tests of Building Construction Materials

4. ASTM E1399: Standard Test Methods for Cyclic Movement and Measuring of Joint Systems

5. ASTM E1725: Standard Test Methods for Fire Tests of Fire-Resistive Barrier Systems of Electrical Systems Components

6. ASTM E1966: Standard Test Methods for Fire Tests of Joints

B. Underwriters Laboratories, Inc. (UL):

1. UL 723 Surface Burning Characteristics of Building Materials

2. UL 1479 Fire Tests of Through-Penetration Firestops, including optional air leak test

3. UL 2079 Fire Test of Building Joint Firestop systems

4. UL Fire Resistance Directory (Component Listing Test Criterion)

C. National Fire Protection Agency (NFPA)

1. NFPA 80 Standard Fire Door and Window Assembly Tolerances

2. NFPA 252 Standard Fire Test for Fire Rated Doors (not specified for positive or negative furnace test pressure)

3. NFPA 257 Standard Fire Test for Fire Rated Windows (not specified for positive or negative furnace test pressure)

4. NFPA 101 Life Safety Code

5. NEC 70 National Electrical Code

1.5 PERFORMANCE REQUIREMENTS

A. General: For the following constructions, provide through-penetration firestop systems that are produced and installed to resist spread of fire according to requirements indicated, resist passage of smoke and other gases, and maintain original fire-resistance rating of assembly penetrated.

1. Fire-resistance-rated load-bearing walls, including partitions, with fire-protection-rated openings.

2. Fire-resistance-rated non-load-bearing walls, including partitions, with fire-protection-rated openings.

3. Fire-resistance-rated floor assemblies.

4. Fire-resistance-rated roof assemblies.

B. F-Rated Systems: Provide through-penetration firestop systems with F-ratings indicated, as determined per ASTM E 814, but not less than that equaling or exceeding fire-resistance rating of constructions penetrated.

C. T-Rated Systems: For the following conditions, provide through-penetration firestop systems with T-ratings indicated, as well as F-ratings, as determined per ASTM E 814, where systems protect penetrating items exposed to potential contact with adjacent materials in occupiable floor areas.

1. Penetrations located outside wall cavities.

2. Penetrations located outside fire-resistive shaft enclosures.

3. Penetrations located in construction containing fire-protection rated openings.

4. Penetrating items larger than 4-inch diameter normal pipe or 16 sq. in. in overall cross-sectional area.

D. For through-penetration firestop systems exposed to view, traffic, moisture, and physical damage, provide product that after curing do not deteriorate when exposed to these conditions both during and after construction.

1. For piping penetrations for wet pipe sprinkler systems, provide moisture-resistant through-penetration firestop systems.

2. For floor penetrations with annular spaces exceeding 4 inches in width and exposed to possible loading and traffic, provide firestop systems capable of supporting floor loads involved either by installing floor plates or by other means.

E. For through-penetration firestop systems exposed to view, provide products with flame-spread ratings of less than 25 and smoke-development ratings of less than 450, as determined per ASTM E 84.

1.6 SUBMITTALS

A. See Section 210500 and General Conditions for additional requirements.

B. Product Data: For each type through-penetration firestop system product indicated.

C. Shop Drawings: For each through-penetration firestop system show each kind of construction condition penetrated, relationships to adjoining construction, and kind of penetrating items. Include firestop design designation of testing and inspecting agency acceptable to authorities having, jurisdiction that evidences compliance with requirements for each condition indicated.

1. Submit documentation, including illustrations, from a qualified testing and inspecting agency that is applicable to each through-penetration firestop system configuration for construction and penetrating items.

2. Where Project conditions require modification of qualified testing and inspecting agency's illustration to suit a particular through-penetration firestop condition, submit illustration, with modifications marked, approved by through-penetration firestop system manufacturer's fire-protection engineer.

D. Submit complete plans indicating clearly where all seals are located and the type of seal to be used at that location

E. Qualification Data: For firms and persons specified to demonstrate their capabilities and experience. Include lists of completed projects with project names and addresses, names and addresses of architects and owners, and other information specified.

F. Product Certificates: Signed by manufacturers of through-penetration firestop system products certifying that products furnished comply with requirements.

G. Product Test Reports: From a qualified testing agency indicating through-penetration firestop system complies with requirements, based on comprehensive testing of current products.

1.7 QUALITY ASSURANCE

A. Installer Qualifications: An experienced installer who has completed through-penetration firestop systems similar in material, design, and extent to that indicated for this Project and whose work has resulted in construction with a record of successful in-service performance.

B. Source Limitations: Obtain through-penetration firestop systems, for each kind of penetration and construction condition indicated, from a single manufacturer.

C. Fire-Test-Response Characteristics: Provide through-penetration firestop systems that comply with the following requirements and those specified in "Performance Requirements" Article:

1. Through-Penetration Firestop Systems tests are performed by a qualified testing and inspecting agency. A qualified testing and inspecting agency is UL, ITS, or another agency performing testing and follow-up inspection services for firestop systems acceptable to authorities having jurisdiction.

2. Through-penetration firestop systems are identical to those tested per ASTM E 814. Provide rated systems complying with the following requirements:

a. Through-penetration firestop system products hear classification marking of qualified testing and inspecting agency.

b. Through-penetration firestop systems correspond to those indicated by reference to through-penetration firestop system designations listed by the following:

1) UL in "Fire Resistance Directory."
2) ITS in "Directory of Listed Products."

1.8 DELIVERY, STORAGE, AND HANDLING

A. Deliver through-penetration firestop system products to Project site in original, unopened containers or packages with intact and legible manufacturers' labels

identifying product and manufacturer, date of manufacture; lot number; shelf life, if applicable, qualified testing and inspecting agency's classification marking applicable to Project; curing time; and mixing instructions for multicomponent materials.

B. Store and handle materials for through-penetration firestop systems to prevent their deterioration or damage due to moisture, temperature changes, contaminants, or other causes.

1.9 PROJECT CONDITIONS

A. Environmental Limitations: Do not install through-penetration fires top systems when ambient or substrate temperatures are outside limits permitted by through penetration firestop system manufacturers or when substrates are wet due to rain, frost, condensation, or other causes.

B. Ventilate through-penetration firestop systems per manufacturer's written instructions by natural means or, where this is inadequate, forced-air circulation.

1.10 COORDINATION

A. Coordinate construction of openings and penetrating items to ensure that through-penetration firestop systems are installed according to specified requirements.

B. Coordinate sizing of sleeves, openings, core-drilled holes, or cut openings to accommodate through-penetration firestop systems.

C. Notify Owner's inspecting agency at least seven days in advance of through-penetration firestop system installations; confirm dates and times on days preceding each series of installations.

D. Do not cover up through-penetration firestop system installations that will become concealed behind other construction until Owner's inspecting agency and building inspector, if required by authorities having jurisdiction, have examined each installation.

PART 2 – PRODUCTS

2.1 MANUFACTURERS

A. Acceptable manufacturers subject to compliance with the specifications shall be one of following:

1. A/D Fire Protection Systems, Inc.
2. Hilti Construction Chemicals, Inc.
3. Nelson Firestop Products
4. RectorSeal Corporation (The)
5. Specified Technologies Inc.
6. 3M Fire Protection Products
7. Tremco

8. United Stated Gypsum Company

2.2 FIRESTOPPING GENERAL

A. Compatibility: Provide through-penetration firestop systems that are compatible with one another, with the substrates forming openings, and with the items, if any, penetrating through-penetration firestop systems, under conditions of service and application, as demonstrated by through-penetration firestop system manufacturer based on testing and fired experience.

B. Accessories: Provide components for each through-penetration firestop system that are needed to install fill materials and to comply with "Performance Requirements" Article. Use only components specified by through-penetration firestop system manufacturer and approved by the qualified testing and inspecting agency for firestop systems indicated. Accessories include, but are not limited to, the following items:

1. Permanent forming/damming/backing materials, including the following:

   a. Slag-/rock-wool-fire insulation.

   b. Sealants used in combination with other forming/damming/backing materials to prevent leakage of fill materials in liquid state.

   c. Fire-rated form board

2. Temporary forming materials
3. Substrate primers
4. Collars
5. Steel sleeves

2.3 MIXING

A. For those products requiring mixing before application, comply with through-penetration firestop system manufacturer's written instructions for accurate proportioning of materials, water (if required), type of mixing equipment, selection of mixer speeds mixing containers, mixing time, and other items or procedures needed to produce products of uniform quality with optimum performance characteristics for application indicated.

PART 3 – EXECUTION

3.1 EXAMINATION

A. Examine substrates and conditions, with Installer present, for compliance with requirements for opening configurations, penetrating items, substrates, and other conditions affecting performance.

B. Proceed with installation only after unsatisfactory conditions have been corrected.

3.2 PREPARATION

A. Surface Cleaning: Clean out openings immediately before installing through-penetration firestop systems to comply with written recommendations of firestop systems manufacturer and the following requirements:

1. Remove from surfaces of openings substrates and from penetrating items foreign materials that could interfere with adhesion of through-penetration firestop systems.

2. Clean opening substrates and penetrating items to produce clean, sound surfaces capable of developing optimum bond with through-penetration firestop systems. Remove loose particles remaining from cleaning operation.

3. Remove laitance and form-release agents from concrete.

B. Priming: Prime substrates where recommended in writing by through-penetration firestop system manufacturer using that manufacturer's recommended products and methods. Confine primers to areas of bond; do not allow spillage and migration onto exposed surfaces.

C. Masking Tape: Use masking tape to prevent through-penetration firestop systems from contacting adjoining surfaces that will remain exposed on completion of Work and that would otherwise be permanently stained or damaged by such contactor by cleaning methods used to remove smears from firestop systems materials. Remove tape as soon as possible without disturbing firestop system's seal with substrates.

3.3 THROUGH-PENETRATION FIRESTOP SYSTEM INSTALLATION

A. General: Install through-penetration firestop systems to comply with "Performance Requirements" Article and firestop system manufacturer's written installation instructions and published drawings for products and applications indicated.

B. Install forming/damming/backing materials and other accessories of types required to support fill materials during their application and in the position needed to produce cross-sectional shapes and depths required to achieve fire ratings indicated.

1. After installing fill materials, remove combustible forming materials and other accessories not indicated as permanent components of firestop systems.

C. Install fill materials for firestop systems by proven techniques to produce the following results:

1. Fill voids and cavities formed by openings, forming materials, accessories, and penetrating items as required to achieve fire-resistance ratings indicated.

2. Apply materials so they contact and adhere to substrates formed by openings and penetrating items.

3. For fill materials that will remain exposed after completing Work, finish to produce smooth, uniform surfaces that are flush with adjoining finishes.

3.4 FIELD-QUALITY CONTROL

A. Inspecting Agency: Owner will engage a qualified independent inspecting agency to inspect through-penetration firestop systems and to prepare test reports.

1. Inspecting agency will state in each report whether inspected through-penetration firestop systems comply with or deviate from requirements.

B. Proceed with enclosing through-penetration firestop systems with other construction only after inspection reports are issued.

C. Where deficiencies are found, repair or replace through-penetration firestop systems so they comply with requirements.

3.5 IDENTIFICATION

A. Identify through-penetration firestop systems with pressure-sensitive, self-adhesive, preprinted vinyl labels. Attach labels permanently to surfaces of penetrated construction on both sides of each firestop system installation where labels will be visible to anyone seeking to remove penetrating items or firestop systems. Include the following information on labels.

1. The words: "Warning-Through-Penetration Firestop System-Do Not Disturb. Notify Building Management of Any Damage."
2. Contractor's name, address, and phone number.
3. Through-penetration firestop systems designation of applicable testing and inspecting agency.
4. Date of installation.
5. Through-penetration firestop systems manufacturer's name.
6. Installer's name.

3.6 CLEANING AND PROTECTION

A. Clean off excess fill materials adjacent to openings as Work progresses by methods and with cleaning materials that are approved in writing by through-penetration firestop system manufacturers and that do not damage materials in which openings occur.

B. Provide final protection and maintain conditions during and after installation that ensure through-penetration firestop systems are without damage or deterioration at time of Substantial Completion. If despite such protection, damage or deterioration occurs, cut out and remove damaged or deteriorated through-penetration firestop systems immediately and install new materials to produce through-penetration firestop systems complying with specified requirements.

END OF SECTION 210584

SECTION 211000 - FIRE PROTECTION

PART 1 - GENERAL

1.1 RELATED DOCUMENTS

A. Drawings and general provisions of the Contract, including General and Supplementary Conditions and other Division 1 Specification sections, apply to this section.

1.2 WORK INCLUDED

A. Code compliance, research, design, coordination, and installation of a complete and functional hydraulically calculated sprinkler system and combined riser standpipe system, that meets the approval, and is in accordance with the requirements of Factory Mutual Guidelines (FMG), NFPA 101- Life Safety Code, Owner Standards, NFPA Fire Protection Standards, Underwriters Laboratory (UL), local and state regulation, and these specifications.

B. This is a performance specification. It requires performance of design work, preparation and submission of drawings, procurement of approvals, and provision of complete functional system of automatic sprinklers and/or standpipes. As a result, this section serves dual purpose of providing specifications and indicating design criteria for Contractor's use and guidance in designing systems and preparing sprinkler drawings for approval.

C. Alarm system devices including alarm valves, flow switches/pressure switches, tamper switches and coordination with Division 26.

D. Shop drawings and calculations prepared and submitted in accordance with the requirements of the local fire department and the Owner's insurance underwriter.

E. Permits and approvals of the fire protection system.

F. Field acceptance testing and certification.

G. Coordination drawings.

H. Submittal drawings and working plans shall be prepared utilizing a computer generated system compatible with Owners' AutoCAD Drawing System.

I. Commissioning of systems.

J. Fire service from the existing utility tunnel.

K. Hydrant flow test.

L. Complete automatic wet sprinkler system.

M. Automatic sprinkler heads.

N. Sprinkler accessories.

O. Inspectors test stations.

P. Standpipes and drain risers.

Q. Fire department connections.

R. Fire department valves and cabinets.

S. Backflow preventor.

T. Existing remote fire pump test.

U. Escutcheons.

V. Core drilling of holes up to and including 12” diameter.

W. Sleeves, inserts and hangers.

X. Staging and planking up to and including 8 feet in height.

Y. Record drawings.

Z. Operation and maintenance manuals.

AA. Valve tags and charts.

BB. Instructions.

CC. Hoisting, rigging and setting of all pipe and equipment.

DD. Fees, permit, royalties, guarantees.

EE. Pressure gauges at the top of all standpipes.

FF. Piping and valves.

GG. Furnishing of access panels.

1.3 RELATED SECTIONS

A. Examine drawings and criteria sheets and other Sections of the Specifications including, but not limited to, the following for requirements which affect work under this Section whether or not such work is specifically mentioned in this Section. Coordinate all work with that of all other trades affecting or affected by work in this section.

1. Section 210500 – Basic Fire Protection Materials and Methods

2. Section 500800 – Commissioning

1.4 REFERENCES

A. Refer to Section 210500.

1.5 SUBMITTALS

A. Refer to Section 210500.

1.6 DESIGN CRITERIA

A. Combination standpipe/sprinkler systems and all components, piping, valves and head location, ratings, etc., shall be designed in accordance with NFPA 13, 14, 20, 24, State Building Code and Owner's Insurance Company and other applicable NFPA pamphlets governing the installation of underground fire mains, alarm valves, system drains, fire pump, etc. The Fire Protection Subcontractor shall submit his shop drawings to Local Fire Department and Building Department and Owner's Insurance Company for approval prior to submission to Architect for approval.

B. The fire protection work is partially shown on the fire protection drawings. Sprinkler head locations are shown on the architectural reflected ceiling plans for the public areas. Each bidder for work under this Section of the specifications shall establish for himself, the exact quantity of heads required. Refer to Architectural reflected ceiling plans for preferred sprinkler head locations. Additional heads shall be provided as part of this Contract, as required, to satisfy the code requirements for the hazard stated.

C. Each Bidder shall refer to the fire protection drawings and architectural reflected ceiling plans for major fire protection system's components, piping, head locations and which areas are to have fire department valves, hose cabinets, etc.

D. Provide a complete and operable fire suppression system in all areas that are a part of this Contract. Coordinate all sprinkler head locations with the architectural reflected ceiling plans.

E. Contractor to verify existing fire pump data.

F. Hydraulic calculations shall be based on flow characteristics specified herein for bid purposes only. Actual flow test must be performed or data must be obtained and verified as acceptable by all Authorities Having Jurisdiction by The Fire Protection Subcontractor. The Fire Protection Subcontractor shall perform his own up-to-date flow test to Architect for his review; indication of test location, date, flow, residual and static pressure, etc., as outlined in NFPA #13 and #291. The Fire Protection Subcontractor shall coordinate the flow test of the Owner and Local Water Department and pay all costs and fees associated with flow test at no additional cost to the Owner. The fire pump size shall be verified prior to ordering or installation based on flow test by The Fire Protection Subcontractor.

G. Sprinkler system design shall be based on the following information and in accordance with the Owner's Insurance Company requirements:

1. Sprinkler systems shall be provided throughout the building and shall by hydraulically calculated to provide densities as hereinafter specified with hose allowances as required.

2. Offices, Lounges, Conference Rooms and other Ordinary Hazard Group I occupancy, 0.15 gallons per minute per square foot over the hydraulically most remote 1500 square feet with a 250 GPM hose allowance and a maximum sprinkler spacing of 130 square foot per head.

3. Laboratories shall be designed for Ordinary Hazard (Group I) occupancy, 0.15 gallons per minute per square foot over the hydraulically most remote 2000 square feet with a 250 GPM hose allowance and a maximum sprinkler spacing of 130 square foot per head.

4. Mechanical Rooms shall be designed for Ordinary Hazard (Group II) occupancy, .20 gallons per minute per square foot over the hydraulically most remote 2500 square feet with a 250 GPM hose allowance and a maximum sprinkler spacing of 130 square foot per head.

5. For dry pipe sprinkler systems, include an additional 30% of floor area over the wet system design criteria.

H. Sprinkler systems are to be zoned by floor. Provide floor control valve with tamper switch and flow switch for each riser and for each zone. Provide additional zoning as shown on the drawings. The Contractor shall be responsible for providing pressure reducing valves on the sprinkler system where pressure exceeds 165 PSI. The Contractor shall verify the location of the PRVs based upon a certified fire pump curve and hydraulic calculations.

1. The sprinkler piping is to be looped on each floor. Piping arrangements shall be complete with control valves, tamper switches, flow switches, check valves and inspector test assemblies with drains as required by NFPA-13.

I. Inspector test valves assemblies are to be located at the remote ends of each zone. Provide test assemblies with sight glasses and hard pipe express drains to hub drains.

J. Flow Test Data shall be determined and shall include the following information:

1. Test Date:
2. Agency:
3. Static Pressure:
4. Residual Pressure:
5. Flow Rate:
6. Location:
7. Elevation:

K. The hydraulic calculations shall include the hydraulically most remote area for systems supplied by more than one combination riser. Hydraulic calculations shall show the remote areas being supplied solely from the hydraulically most remote combination riser.

L. Velocity shall not exceed 20 FPS.

M. All calculations shall assume 10 PSI deterioration in static and regional pressures in the hydrant flow test results.

1.7 WORKING PLANS

A. Prepare working plans according to the requirements of NFPA Standard 13 and 14. Working plans and hydraulic calculations shall be prepared by a NICET-Certified Level III or IV Automatic Sprinkler System Engineering Technician and stamped by a Professional Engineer registered in the State of Connecticut. Working plans shall be provided in addition to the requirements for coordination drawings. Coordination drawings will not be accepted in lieu of working plans.

B. Deviation from the approved plans will require re-approval by the reviewing authorities.

C. Submit working plans and hydraulic calculations to the Owner's Representative. Plans submitted without review stamps or hydraulic calculations will be returned without review. Hydraulic calculations submitted without working plans will be returned without review.

D. Submittal drawings and working plans shall be prepared utilizing a computer generated system.

1.8 QUALITY ASSURANCE

A. Installer: Company specializing in performing work of the type specified in this Section, with documented experience.

B. Manufacturer: Company specializing in manufacturing products specified in this Section, with document experience.

C. Welders: Certify in accordance with ASME (BPV1X)

PART 2 - PRODUCTS

2.1 ACCEPTABLE PRODUCTS

A. Materials and equipment provided under this Section to make a complete installation shall be U.L. listed and/or FMG-approved and in compliance with NFPA Standards.

2.2 PIPING, FITTINGS, AND JOINTS

A. Piping shall meet applicable ANSI or ASTM standards requirements and shall have manufacturer's name and standard marked on each length. Joints shall meet applicable ANSI and ASTM standards requirements. Where ANSI and ASTM standard does not exist, joints and fittings shall bear UL listing symbol.

B. Underground fire protection service piping shall be ductile-iron thickness class 52, ANSI A21-51 with cement-mortar lining per ANSI A21.4. Fittings shall be ductile-iron 250 psi rating per ANSI A21.10 with cement-mortar lining per ANSI A21.4. Pipe Joints shall be push-on ANSI A21.11 with retainer glands and thrust blocks as required. All materials and installation shall conform to NFPA 24 as a minimum. Furnish and install (2) flexible Dresser Model 35 Couplings and retainer clamps on the incoming water service. Connect to cement lined ductile iron site water main at 10’ from building wall.

C. Piping for sprinkler systems and standpipe systems 2-1/2" in size and larger may be Schedule 10 black steel conforming to ASTM 135. Piping for sprinklers 2" and smaller in size shall be Schedule 40 black steel conforming to ASTM A53. Should any authority require, standpipe and/or sprinkler risers shall be schedule 40 regardless of size.

D. Piping for use with hole-cut fittings shall have machine cut holes per manufacturer requirements at predetermined positions, on the centerline of the pipe, of a size to receive the housing locating collar. Hole cutting machine shall be supplied by the fitting manufacturer.

E. Piping for use with grooved end fittings shall be roll grooved without metal removal or as per manufacture requirements.

F. Flexible piping connections to sprinkler heads may be used for either suspended or sheetrock ceilings. All flexible piping systems shall be UL listed and FM approved and suitable for their intended use, similar to Flexhead Series 2000.

   1. All flexible piping connections shall include a fully welded (non mechanical fittings), braided, leak-tested sprinkler drop with a minimum internal corrugated hose diameter of 1”; and a one-piece multi-port ceiling bracket with removable attachment hub and self-securing integrated snap-on clip ends, for attachment to ceiling grid without the need for a screw fastener.

G. Fittings for Grooved End Steel Pipe shall be cast of ductile iron conforming to ASTM A-536 or forged steel conforming to ASTM A-234 (A-106, Gr. B), with grooved or shouldered ends for direct connection into grooved piping systems with steel pipe and shall be UL listed and FMG approved, rated for a minimum 300 psi maximum working pressure (MWP) and shall be of one manufacture Victaulic, Gruvlok or Central.

H. Branch outlet fittings shall be UL listed and FMG approved, and rated for 500 psi (MWP) on piping 3" and larger, and 300 psi (MWP) on piping under 3" in size and shall be of one manufacture Victaulic, Gruvlok or Central:

   1. Mechanical tee branch, hole-cut type connections, with locating collar engaging into hole, with standard pressure responsive gaskets and black nuts and bolts similar to Victaulic Style 920/920N or

   2. Outlet couplings, construction as hereinafter specified for couplings, with outlets grooved or threaded outlet ends with standard pressure responsive gaskets and black bolts and nuts similar to Victaulic Style 72.

3. No strap, snap and or one bolt outlet fittings will be permitted.

I. Standard black cast iron screwed fittings shall be used on piping 2" and smaller and may be used on larger sizes.

J. All grooved couplings, fittings and mechanical tee branch fittings shall be Victaulic, Gruvlok or Central.

K. All pipe, fittings, valves, devices and associated appurtenances shall be rated for pressures that may be developed.

L. Bushings shall not be permitted where fittings of required sizes are manufactured. Care shall be taken in the design of this work to avoid piping arrangements that would require bushings.

M. Unless specified otherwise herein, all fittings shall be in accordance with NFPA standards and subject to approval by the Architect/Engineer. All fittings are to be UL listed and FMG approved.

N. All close and shoulder nipples shall be of corresponding materials as the pipe and shall be extra heavy pattern.

O. Pipe and fittings exposed to weather and piping between check valve and fire department pumper connection shall be galvanized.

P. Piping and fittings may be joined by mechanical grooved couplings. Grooved couplings shall be cast of ductile iron conforming to ASTM A-536 with bolts/nuts conforming to ASTM A-449. Standard gaskets to be used for systems under operating conditions within the range -30°F through +230°F for wet fire protection sprinkler service. Dry pipe system to be provided with "flush seal" type gaskets. All grooved couplings shall be 300 psi (CWP) as a minimum.

1. Rigid Type Couplings: Housings cast with offsetting, angle-pattern bolt pads to provide rigidity and system support and hanging in accordance with ANSI B31.1 and B31.9. Couplings that require the use of torque wrenches for proper installation are not permitted similar to Victaulic Style 005.

2. Flexible Type Couplings: Use in locations where vibration attenuation and stress relief are required similar to Victaulic Style 75.

3. Flange Adapters: Flat face, for direct connection to ANSI Class 125 or 150 flanged components similar to Victaulic Style 744.

Q. All piping for fire pump suction, fire department connections and test headers shall be Schedule 40 piping.

R. Sprinkler piping in areas subject to magnetic fields, i.e. MRI, NMRs, etc. shall be copper, ASTM B88 Type L. Hung from copper hangers.

2.3 VALVES

A. All valves shall be UL listed and FMG approved similar to Mueller, Nibco or Victaulic. All valves that are installed as a part of this specification shall be provided with pressure ratings suitable for their intended service.

B. Shut-off and/or control valves shall be:

1. Outside screw and yoke valve. Cast iron body, bronze mounted, flanged or grooved ends, solid wedge, 2-1/2" in size and up. All bronze, solid wedge, threaded ends, 2" and under in size both to be electrically supervised, or

2. Bronze supervised slow close butterfly valve, threaded ends, stainless steel disc and stem, built-in supervisory switch, slow-close operator, up to 2-1/2" in size, or

3. Butterfly type indicating valves, grooved end, ductile iron body, elastomer encapsulated ductile iron disc with integral seating surface or bronze disc with rubber seat, gear operator, with built-in supervisory switch similar to Victaulic 705W. Wafer body style is not acceptable.

4. All equipment must be installed with isolation valves for service shut-off. The shut-off valves shall be screwed, grooved or flanged. If screwed ends are provided, a union or a coupling between equipment and valve shall be provided.

C. Check valves shall be:

1. Iron body, bronze mounted swing check with flanged ends, 2-1/2" in size up to 8" size; or

2. Iron body, spring actuated, wafer check, sizes 4" through 8"; or

3. Grooved end, ductile iron body, spring activated, sizes 2-1/2" through 12" similar to Victaulic Series 717.

4. All check valves up to 2" in size shall be all bronze with screwed ends.

D. Trim Valves: (for use on inspectors test set ups, alarm check valves, dry pipe valves, etc.)

1. Gate valves - all bronze, solid wedge, outside screw and yoke, rising stem, screwed ends.

2. Ball valves - all bronze, 400 lb. WWP, screwed ends.

3. Globe valves - all bronze, 200 lb. WWP, screwed ends.

4. Check valves - all bronze swing check, rubber disc, 200 lb. WWP, screwed ends.

E. Backflow Preventors

1. Detector check valves shall be Febco, Watts or Conbraco, ductile iron body, bronze mounted, flanged end with electrically supervised OS&Y, resilient wedge gate valves, threaded bypass taps in the inlet and outlet for bypass meter connection. Set valve to allow minimal water flow through bypass meter when full system flow is required. Meter shall be disc type, AWWA C700.

2. The Fire Protection Subcontractor shall submit, as required, to local authorities for approval of backflow prevention device and proposed installation. Furnish confirmation of approval to the Architect before installation. Before Owner's instruction commences, arrange testing of the backflow prevention device by certified personnel and furnish confirmation of testing to the Architect. Provide one spare parts kit and one each of any special tools required per backflow prevention device installed.

F. Valve Boxes

1. Cast iron, two piece, pioneer pattern, sliding type with a non-flanged top section and an outside shaft diameter of six inches. Middle and bottom section length as needed. Boxes shall have the word Water clearly cast on the cover.

2.4 SPRINKLER HEADS

A. All sprinkler heads shall be listed by U.L. and approved by FMG. All sprinklers shall be of single manufacturer. Heads shall be as manufactured by Reliable, Central, Viking, Star or Victaulic.

B. Sprinkler heads shall be furnished and installed to conform with manufacturer’s listing.

C. All sprinklers shall be coordinated with a final reflected ceiling plan to arrive at a suitable pattern consistent with proper sprinkler protection.

D. All sprinklers within 8’-0” of the floor in mechanical rooms shall have sprinkler guards, wire gage type.

E. Sprinklers shall be located in center of tiles.

F. Corrosion resistant sprinklers shall be provided in the water tank room.

G. Glass bulb type sprinklers shall not be installed in areas subject to freezing.

H. Concealed sprinkler heads with white cover, similar to reliable G4 shall be provided for all areas with finished ceilings/typical and custom colors shall be provided in gathering space.

I. Upright sprinkler heads similar to Reliable F1 shall be provided in, unfinished areas such as mechanical rooms, without ceilings and shall be brass, 1/2” orifice, 155°F rated, FMG approved.

J. Upright or pendent heads in finished areas, without ceilings shall be similar to Reliable F1, chrome plated. 1/2” orifice, 155°F rated, FM approved.

K. High temperature dry sidewall heads at the top and bottom of all elevator shafts shall be 200°F rated, 1/2” orifice.

L. Vestibules shall be provided with dry type pendent sprinklers, chrome plated with 1/2” orifice 155°F rated.

M. Cold rooms shall be provided with dry type pendent sprinklers, chrome plated with 1/2” orifice 155°F rated.

N. Animal holding rooms and all other areas within the Vivarium shall be provided with chrome plated pendent heads similar to Reliable Model F1, 155°F rated, 1/2” orifice. Heads shall be caulked around the escutcheon.

O. Quick response recessed heads shall be provided in light hazard occupancy areas similar to Reliable Model F1FR, 1/2” orifice rated at 155°F.

P. Glazing requiring window protection shall be provided with pendent vertical sidewall or horizontal sidewall chrome plated heads similar to Central WS, 155°F rated, 1/2” orifice.

Q. High temperature heads rated at 200°F shall be provided at discharge side of all glasswashers, cage and rack washers and autoclaves. Heads shall be chrome plated pendent style similar to Reliable F1.

R. Spare Heads: Provide 20-gauge steel sprinkler head cabinets with red enamel finish. Furnish the quantities of spare sprinkler heads for each type installed as required by NFPA Standard 13. Furnish sprinkler wrench for each head type installed. Mount in mechanical room or fire pump room.

2.5 PIPE HANGERS AND SUPPORTS

A. Acceptable products: Hanger materials shall match piping material as required for dielectric isolation. All support systems shall be UL listed and FMG approved and shall meet ASTM B633, SC1 and SC3.

B. Support all piping included in the Work of this Section with hangers and rods attached to the building structure. Hang piping in compliance with NFPA Standards and the requirements of this Section. Attach beam clamps before application of spray fire-proofing.

C. Piping 2-1/2" and smaller: Carbon steel, adjustable swivel.

D. Piping 3" and larger: Carbon steel, adjustable, clevis.

E. Hanger Attachments

1. Beam Clamps: Carbon steel hanger with lock nut and retaining strap or approved equal.

2. Expansion Shields: Hilti HDI or approved equal.

3. Inserts: Malleable iron case of galvanized steel shell and expander plug for threaded connection with lateral adjustment, top slot for reinforcing rods, lugs for attaching to forms; size inserts to suit threaded hanger rods. Hilti HKD or approved equal.

F. Space hangers and supports for horizontal steel sprinkler piping according to the following schedule:

	Pipe Size:	Maximum Hanger Spacing:
1.	1-1/4" and smaller	8'-0"
2.	1-1/2" to 3"	10'-0"
3.	4" to 5"	12'-0"
4.	6" and larger	15'-0"

G. Hanger Rods: Mild steel threaded both ends, threaded one end, or continuous threaded. Provide hanger rods sized according to the following schedule:

	Pipe Size:	Minimum Rod Diameter:
1.	4" and smaller	3/8"
2.	5", 6" and 8"	1/2"
3.	10” and 12”	5/8”

H. Hang standpipe and sprinkler piping to support the weight of the water filled pipe plus 250 pounds at the hanger.

I. Hang horizontal fire line piping to support the weight of five times the weight of the water filled pipe plus 250 pounds at the hanger.

J. Provide steel angle supports attached to the building structure to support piping below ductwork.

K. Riser Clamps: Carbon steel riser clamp, black or galvanized finish.

L. Floor Supports: Schedule 40 black steel adjustable pipe saddle, lock nut, nipple, floor flange, and concrete pier or steel support.

M. All vertical drops and run-out pipes shall be supported by split ring extension type hangers.

2.6 PIPE SLEEVES, PLATES AND ESCUTCHEONS, FIRESTOPPING AND SMOKEPROOFING

A. Refer to Section 210500.

2.7 WET-PIPE ALARM VALVE

A. Wet alarm valve shall be UL listed and FMG approved for a wet pipe sprinkler system, complete with ductile iron body, flanged or grooved outlet, main drain valve, pressure gauges, alarm port, external bypass, hand hole with cover, hinged clapper assembly and other required trimmings. Valve shall be equal to Reliable Model E, Victaulic, Grinnel or Viking for variable pressure vertical installation with water motor and chrome plated gong. Water motor and gong shall be located on the outside of building. Supply pipe to gong and drain shall be IPS brass, galvanized steel or copper.

B. Excess pressure kit to be Gamewell #26615-7 with associated control wiring, pressure switches, supervisory panel, mounting brackets, pump and motor. Motor shall operate from differential pressure switch. Furnish with alarm lights and alarm dry contacts. Pump capacity: 1 GPM, 175 psi max, 1/4 HP, 120V.

C. Valve trim shall include pressure activated electric alarm switch.

2.8 FIRE DEPARTMENT HOSE VALVES AND RELATED EQUIPMENT

A. Provide Fire Department valves (FDV), fire valve cabinets where noted on the contract drawings. Hose cabinets shall be complete with 2 1/2 inch valves and shall be fully recessed type. Fire Department valves shall be adjustable type so that no valve is set for greater than 100 psig at outlet. The Contractor shall be responsible for location of reducing/restricting valves based upon a certified fire pump curve and hydraulic calculations. Cabinets and valves shall be as manufactured by Croker, Potter-Roemer, Elkhart or Larsen, as follows:

1. Fire Department Valves (FDV)

a. Fire Department valves shall be Croker #5015, Potter Roemer #4065 or approved equal, female inlet by male outlet, chrome plated or rough brass finish, 300 psi working pressure, complete with 2 1/2" female by 1 1/2" male outlet reducer and 1 1/2" cap and chain or,

b. Fire Department valves shall be Croker #5055, Potter Roemer #4085 or approved equal, pressure restricting, female inlet by male outlet, chrome plated or rough brass finish, 300 psi working pressure, complete with 2 1/2" female by 1 1/2" male outlet reducer and 1 1/2" cap and chain or,

c. Fire Department valve shall be of the pressure reducing type Underwriter's listed Croker #5610, Potter Roemer #4033 or approved equal. The hose valve shall be cast bronze and have a 2-1/2" female inlet and male outlet with cap and chain; accept 400 psi inlet pressure and reduce it in both FLOW and NO FLOW conditions at the outlet; be field ADJUSTABLE and set at the factory or SET IN THE FIELD without draining the standpipe riser.

d. Valve shall be mounted exposed, no cabinet in stairway unless noted otherwise on drawings.

e. This Subcontractor shall include in this bid proposal the cost to adjust all pressure restricting and/or reducing valves in accordance with NFPA 14 or

Local Authorities. This work shall be accomplished by the Manufacturer's Authorized Representative and attested to in writing to the Architect by The Fire Protection Subcontractor.

2. Fire Department Valve Cabinet

a. Fire Department Valve Cabinet (FDVC) shall be Croker Figure No. 2700, Potter Roemer #1810 or approved equal steel cabinet recessed style with plexiglass door. Fire department valve to be as outlined in item 1 above.

b. Fire Hose Cabinet (FHC) shall be Croker Figure No. 2300-A, Potter Roemer #1306-A or approved equal steel cabinet, recessed plexiglass door; Figure No. 5060 angle 1-1/2" pressure restricting valve, cadmium plated escutcheon; No. 3350 1-1/2" hose rack, No. 3365 nipple, 75'; 1-1/2" 3410 lined linen hose, No. 3467 brass all fog nozzle and No. 4410 carbon dioxide extinguisher.

3. Fire Extinguisher's and Cabinets

a. Refer to Architectural Specifications.

2.9 FIRE DEPARTMENT PUMPER CONNECTIONS

A. Provide complete connection assemblies with body, identified face plate, snoots, caps and chains, with threads to suit Fire Department.

B. Fire Department Pumper Connections

1. Surface or Flush Mounted: Polished cast brass or polished chrome with escutcheon and two-way, three-way, or four-way connection. Each inlet shall have a clapper valve, and plug and chain. Identify: "Auto-Spkr-Standpipe" or “Standpipe Connection”. Potter-Roemer Series 5500 (for flush) Series 5740 & 5750 (for surface)

a. Freestanding: Polished cast brass or polished chrome with escutcheon and two-way, three-way, or four-way connection. Each inlet shall have a clapper valve, and plug and chain. Identify: "Auto-Spkr-Standpipe" or “Standpipe Connection”. Potter-Roemer Series 5780 & 5790.

2.10 ALARM DEVICES

A. Water Flow Switches: Vane Type Switch for mounting horizontal or vertical, with two contacts rated 10 Amp at 120 volt AC, with adjustable 60 second time delay mechanism. Potter-Electric Model VSR-D, Notifier or System Sensor.

B. Water Pressure Switches

1. Main Alarm: Potter-Electric Signal Co. Model PS1O-2A, or approved equal with two sets of double throw, single pole contacts with adequate pressure differential to prevent false operation.

2. Supervisory: Potter-Electric Signal Co. Model PS40-2, or approved equal with two sets of double throw, single pole contacts with adequate pressure differential to prevent false operation.

C. Supervisory Tamper Switches

1. OS&Y Gate Valves: Tamper switch with two contacts rated 10 Amp at 120 volts AC. Potter-Electric Model OSYSU-A2 or approved equal.

2. Post-Indicator Valves: Tamper switch with two contacts rated 10 amp at 120 volts AC. Potter-Electric Model PCVS-2 or approved equal.

3. Water Motor Gong: Hydraulically operated impeller type alarm with aluminum alloy chrome plated gong and motor housing, nylon bearings, and inlet strainer.

4. Electrical alarm bell for weatherproof operation shall be 6”, Potter Electrical or approved equal.

D. Air Pressure Switch: For monitoring high/low pressure variations, 130 psi rated to detect system pressure from 3 to 90 psi.

2.11 SPRINKLER ACCESSORIES

A. Alarm Testers: In place of the assembled inspector's test assembly, the following manufactured alarm testers may be used: Victaulic 720 Test Master III or AGF Model 1000 Test and Drain. Test stations in systems over 175 PSI shall be equipped with relief valve as required.

B. Ball Drips: Grinnell Model F775, Reliable Model C, or Viking Model B-1.

C. Pressure Gages:

1. Water: 3-1/2 inch diameter, 0-300 psi. Reliable Model UA or approved equal. Provide at inlet and outlet of pumps and at top of all standpipes

2. Air: 3-1/2 inch diameter, 0-250 psi. Reliable Model UA or approved equal.

2.12 ELECTRICAL COMPONENTS

A. Provide all electrical components including, but not limited to motors, contactors, and controllers as required for all equipment included under the Work of this Section. Controllers shall be wired to require a single power supply provided under Division 26.

B. The Fire Protection Subcontractor shall prepare a typewritten list of all equipment to which the Electrical Subcontractor shall make connections. This list shall include all electrical characteristics of each piece of equipment. Submit list to Engineer and Electrical Contractor prior to purchasing any of this equipment.

2.13 EARTHQUAKE PROTECTION AND SEISMIC RESTRAINTS

A. The Fire Protection Subcontractor shall provide all necessary design and materials for seismic restraint and protection of piping and devices against damage where subject to earthquake as required for the entire fire protection system within the building. All isolation and seismic devices shall be the product of a single manufacturer. Products of other manufacturers are acceptable provided their systems strictly comply with this section of the specifications. Provide isolation materials and seismic restraints complete and as manufactured by Mason Industries, Tolco or approved equal.

1. The work under this section shall include the design, furnishing and installation of all restraint devices and systems as may be required for the fire protection system including, but not necessarily limited to, the following:

   a. All fire protection equipment and devices such as pumps, air compressors, tanks, etc.
   b. All fire protection system piping as required.
   c. Piping penetrations through floors and walls.
   d. Sleeves with clearances around the outside, as recommended.
   e. Equipment isolation bases.
   f. Piping flexible connectors.
   g. Seismic restrains for isolated equipment.
   h. Seismic restraints for non-isolated equipment.
   i. Certification of seismic restraint designs.
   j. Six (6) elbow swing joints at all building seismic separations as required by NFPA #13.

B. Submit ten (10) copies of descriptive data for all products and materials, including the following:

1. Catalog cuts and data sheets for the specific isolators, restrains and all other items to be utilized.

2. Details of methods of sleeving, fire protection, smokeproofing and isolation for pipes penetrating walls and slabs.

3. Specific details of seismic restraints and anchors, including number, size and locations for each piece of equipment.

4. Calculations to support seismic restraint designs.

5. All calculations, details and other submittal materials shall be sealed and signed by a Structural or Civil Engineer registered in the state and qualified to perform seismic design calculations.

6. A seismic design liability insurance certificate that must accompany all submittals.

C. Code and standard requirements shall include, but not be limited to:

1. Applicable BOCA-NBC with any additional state or local requirements.
2. NFPA 13, 14, 20 and 24 and other applicable NFPA standards.

3. All state and local codes.

D. Manufacturers working in this section must provide a seismic design liability insurance certificate and certify their ability to provide engineering and design as required by this section. This certificate shall be submitted to the Architect for review prior to any submittals.

PART 3 - EXECUTION

3.1 GENERAL

A. This is a performance specification. It requires performance of design work, preparation and submission of drawings, procurement of approvals and provision of complete functional system of automatic sprinklers/standpipes. As a result, this Section serves dual purposes of providing specifications and indicating design criteria for Contractor's use and guidance in designing systems and preparing sprinkler drawings for approvals.

B. The contract documents intend to show only the scope of the design, the Fire Protection Contractor shall be responsible for the correct installation of this work in a manner satisfactory to the best practices of his trade to complete the scope of this subcontract in all respects. No roughing work shall be accomplished until the pertinent manufacturer's shop drawings are approved.

C. The location of piping as indicated on the Drawings, unless otherwise noted, is diagrammatic only, and the exact locations shall be determined in the field. The run and arrangement of all pipes shall be approximately as shown on the Drawings, as directed during installation, in strict accordance with NFPA Pamphlets, and as straight and direct as possible, forming right angles or parallel lines with building walls and other pipes, and neatly spaced. All risers shall be erected true and plumb, parallel with walls and other pipes, and neatly spaced. All horizontal runs of piping, except where concealed in partitions, shall be kept as high as possible and close to walls. Where possible, adjacent pipe lines, both heating and plumbing, shall be grouped in the same vertical or horizontal planes. All piping shall be concealed and concealed piping shall have a minimum number of fittings. Piping shall not interfere with the operation or accessibility of doors, windows, access panels, valves, H & V unit access, air flow patterns, or equipment, and shall not encroach on aisles or passageways. All piping shall be installed to preserve access to all valves, drains and equipment. Pipe will not be permitted to pass through beams or ribs. Make such offsets and deviations from the Drawings as may become necessary to meet actual field conditions.

D. The Fire Protection Contractor shall be responsible for the correctness of field dimensions and shall check for himself all grades, lines, measurements, and other data in any way affecting his work. He shall refer to the project phasing schedule together with architectural and structural drawings of other Trades for a full comprehension of the extent of the work to be performed and to avoid interference, and shall not be entitled to any extra compensation for any additional work or expense arising from his failure to do so. In case interference develops the Architect shall decide which work is to be relocated, regardless of which was first installed. Work installed by the Fire Protection Contractor which is improperly located and/or interferes with or modifies either the phasing schedule or the architectural or structural design, shall be changed as

directed by the Architect, and all costs incidental to such changes shall be paid by the Fire Protection Contractor.

E. The Fire Protection Contractor shall coordinate all his work with the work of all other Trades, and shall so arrange his work that there will be no delay in the proper installation and completion of any part or parts of each respective work wherein it may be interrelated with his, so that generally all construction work can proceed in its natural sequence without unnecessary delay, close coordination is also required with the HVAC, Plumbing and Electrical Contractors in areas serving these Trades. The Fire Protection Contractor shall also participate with all other Contractors in the process to prepare a complete set of coordination drawings prior to installation of any systems.

F. Contact between piping and dissimilar metals such as hangers, building structural work, or equipment shall be avoided to prevent galvanic action.

G. Pipe shall be cut accurately to measurements established at the site and shall be worked into place without springing or forcing. All pipe, regardless of how cut throughout the job, shall be reamed smooth and all burrs removed before being installed. Pipe shall not be split, bent, flattened, nor otherwise injured either before or during the installation. Full lengths of pipes shall be used wherever possible and short lengths of pipe connected with couplings will not be permitted.

H. The Fire Protection Contractor shall use every precaution in the installation of all piping to prevent dirt, chips, or other foreign materials entering the inside of piping. All pipes shall be clean and blown out to the satisfaction of the Architect before closing of any line. Keep the ends of piping capped or blind flanged during the construction of the system to keep out dirt or other foreign matter. The plugs and caps are to remain until permanent and final installation is made. The use of paper, waste, rags and so forth to close openings will not be permitted.

I. Unions or flanges shall be installed at all equipment valves and at such other places as may be necessary to disconnect piping or at each piece of equipment or accessory which may have to be disconnected to make repairs.

J. Bushing will not be inserted in fittings for reduction in size where fittings of required size are manufactured.

K. The Fire Protection Contractor shall also provide the necessary data and supervision for the provision of all holes in the structure, and also for the installation of equipment foundations, including bolt hole templates, weights and manufacturer's recommendations for proper emplacement design. This shall be furnished to the Construction Manager and other related subtrades.

L. Equipment and accessories shall be set level, plumb and in proper alignment with reference to adjacent walls. All surfaces coming in contact with walls, floors or other equipment shall have properly planed surfaces with suitable contact on wall and floors.

M. Clips, hangers, clamps, supports and other attachments to surfaces to be fireproofed shall be installed, insofar as possible, before start of spray fire proofing work. Piping and equipment that interfere with proper application of fireproofing shall be installed

after completion of spray fire proofing work. Patch and repair spray fireproofing cut or damaged during course of work specified under this Section. Trade responsible for damage shall bear cost of repair.

3.2 HYDRANT FLOW TEST

A. Notifications: Notify the authorities having jurisdiction at least three working days in advance of performing the flow test.

B. Perform hydrant flow test in compliance with NFPA Standards 13 and 291. Perform test as close as possible to new wet-tap connection for new fire service.

1. Pressure drop from static to residual shall be at least 25 percent of the static pressure. The flow at the residual pressure shall meet or exceed the preliminary estimated design flow. Open additional hydrant butts as required to obtain the specified pressure drop or to match the preliminary estimated design flow.

C. Record elevations of the test hydrants and submit hydraulic graph(s) indicating test results for review and approval before submitting hydraulic calculations and working plans.

D. Hydraulic graph shall indicate elevation adjustments and water supply curve at wet-tap connection.

3.3 HYDRAULICALLY CALCULATED SPRINKLER SYSTEM

A. The Contractor shall provide a hydraulically designed system in complete accordance with and as defined in applicable National Fire Protection Standards.

B. Verification of Hydraulic Information

1. The Contractor shall perform hydrant flow tests to establish water supply availability. Water supply information shall be provided on shop drawings as outlined in NFPA 13.

2. The Contractor shall confirm that hazard classifications/density requirements conform with the Owner's fire insurance underwriter's requirements and those of other authorities having jurisdiction.

3. The Contractor shall confirm the presence or absence of existing fire pumps and obtain current test data for same.

4. The Contractor shall make necessary field measurements of the existing fire protection system if applicable.

5. The Fire Protection Contractor must obtain current pump test results or perform fire pump flow test in accordance with NFPA 20 to establish the performance of the existing fire pump.

C. Accompanying sprinkler shop drawings submitted to the Architect shall bear all sprinkler system requirements, water supply data, graph and work sheets all as defined by NFPA. The hydraulic graph shall include the following information:

1. Hydrant flow test curve.
2. Adjust flow test for friction and elevation at new wet tap connection.
3. System friction loss curve for sprinkler system with inside hose stream.
4. Available outside hose stream flow.
5. Fire pump discharge curve.

D. All calculations shall assume a 10 psi deterioration in static and residual pressures in the hydrant flow test results.

E. Velocity shall not exceed 20 FPS.

F. In addition to the above noted requirements, the hydraulic calculations shall include:

1. The hydraulically most remote area for each hazard classification/density requirements as noted on the contract documents.

2. If combination risers are shown interconnected with sprinkler piping, hydraulic calculations shall show the remote area being supplied solely from the hydraulically most remote combination riser.

3. Additional hydraulic calculations shall be submitted, when requested, which demonstrate that the Contractor's selected remote areas are indeed the hydraulically most demanding as well as remote.

4. If new work is to be connected to existing piping the Fire Protection Contractor shall verify that the existing piping can support demands generated by the hydraulic calculations.

3.4 INSTALLATION OF PIPING AND EQUIPMENT

A. Install the Work of this Section in compliance with the referenced NFPA Standards. Coordinate installation with work of other sections and install piping level or pitched back to main riser or low point drain. Provide drain valve on trapped piping. Install all sprinkler heads with return bend drops to ceilings.

B. Install fire line piping and combined standpipe risers generally as shown on the Drawings. Run piping concealed above ceilings and within furred spaces. Take special care to locate risers within pipe chases as indicated on the architectural drawings. Obtain approval from the Architect for piping locations which require furrings not indicated on the Contract Drawings. Provide pressure gauges with shut-off cock at top and base of risers.

C. Provide 3/4-inch hose end drain valve with cap and chain at base of standpipe riser. Locate drain valve downstream of riser isolation valve.

D. Provide inspectors test valve assemblies for each flow switch and 3 inch sprinkler test drain stacks at each combined standpipe and spill to drain. Provide main inspector's test assembly at most remote point of system.

E. Install equipment and products provided under this Section in compliance with the product listing and the manufacturer's installation instructions.

F. Install chrome-plated escutcheons where piping passes through finished surfaces.

3.5 WATER SERVICE

A. Route water service piping as shown on Drawings. Provide offsets required to avoid conflicts with ledge and other unforeseen circumstances. Work associated with street main tapping and water service piping to building shall meet requirement of local authority. When work is not in progress, plug open ends of pipe to ensure that foreign matter does not enter piping system.

B. Tap existing main under pressure with full tapping sleeve. Tapping valve shall be UL listed and FM approved, iron body, bronze-mounted, non-rising stem, square head, mechanical joint end, 175 psi working pressure with valve box extensions to grade; box shall be approved by local Water Department.

C. Provide thrust blocks and tie rods for fittings used to change direction of water service piping. Where adequate bearing cannot be obtained for thrust blocks, provide tie rods. Refer to Drawing details for information regarding size of thrust blocks.

D. Coordinate with pipe bedding provided under Division 2. Keep excavation open until system has been inspected, tested and approved.

E. Flush and test water service piping in accordance with NFPA #24 and other applicable NFPA Standards. Leakage shall not exceed 2 quarts per hour per 100 joints regardless of pipe diameter. Submit copies of test certificates required by NFPA #24 to the Architect before connection to building fire protection system. Flush water service and disinfect if required by Authorities.

3.6 CONTINUITY OF SERVICES

A. Do not interrupt existing services without Owner's approval.

B. Schedule interruptions in advance, according to Owner's instructions. Submit, request for interruption with methods proposed to minimize length of interruption, in writing.

C. Interruptions shall be scheduled at such times of day and work to minimize impact on Owner's operations.

3.7 SHUTDOWNS

A. The Contractor shall work with the Owner in maintaining integrity of all fire protection systems in adjacent buildings as well as areas outside of this contract. Coordinate and minimize any and all shutdowns of the fire protection system as follows:

1. Give proper notice to Owner when making shutdowns and pay any fees required.

2. Perform any duties required by Owner when making a shut down.

3. Fill out a shutdown notice form answering all items request such as time and location of shutdown, systems affected, areas affected, etc. when requesting a shutdown.

4. Provide fire watch as required during a shutdown.

5. Duration of shutdowns shall be kept to a minimum.

6. In no case shall the fire protection system be shut down during off hours of work day without a fire watch.

7. System shall be returned to normal operating conditions at end of work day.

3.8 CONNECTIONS TO EXISTING SYSTEMS

A. Modify the system as required. Remove existing sprinkler mains and branches to accommodate new piping and offsets to piping and additional heads. The sprinkler system shall be fed from the existing riser or main as indicated on the plans.

B. This Contractor shall pay all costs associated with alarm shutdowns of existing systems necessary for new connections.

C. Refer to "Shutdowns" Section of this Specification.

D. Existing valves, flow switches and tamper switches shall remain, but shall be checked for proper operation and condition and shall be protected by the Contractor. Damage to these items occurring after checking for proper operation and condition shall be made good by the Contractor at his own expense with new identical materials. Provide temporary caps as required during system modification to maintain sprinkler protection.

3.9 FIRE PROTECTION DEMOLITION, RELOCATION AND ALTERATION

A. During the execution of the work, required relocation, renovation, or demolition of existing Fire Protection equipment and systems in the existing areas where new work and connections are scheduled to be made shall be performed by the Fire Protection Contractor as indicated on the drawings, as required by job conditions, and as determined and directed by the Construction Manager in close cooperation with the Architect and Owner's designated representative to facilitate the installation of the new systems and completion of this Contract. The Owner shall require the continuous operation of all existing systems while demolition and relocation work of new tie-ins are being performed. Outages required for construction purposes shall be scheduled for the shortest practical periods of time in coordination with the Owner's designated representative through the Construction Manager for specific, mutually agreeable periods of time after each of which the interruption shall cease and service shall be restored. This Contractor shall be responsible for any and all fire watch as required by

the local fire department or Owner. This procedure shall be repeated to suit the Owner's working schedule as many times as required until all work is completed.

B. Prior to any deactivation and relocation, capping, valving, tie-in or demolition work, consult the drawings and arrange a conference with appropriate parties through the Construction Manager in the field to inspect each of the items to be deactivated, removed or relocated. Care shall be taken to protect all equipment designated to be relocated and reused. A minimum (5) working days advance notice shall be given to all parties.

C. All draining of existing systems, filling and venting required to remove and relocate existing piping systems shall be included and provided under this Contract as required to perform the various relocations or new tie-ins.

D. Except as otherwise noted, all deactivation, safe capping, valving, etc., of systems designated to be demolished by each Trade, as applicable, and all demolition, removal and disposal of demolished materials shall be performed as directed by the Construction Manager. All equipment scheduled to be removed shall be inspected by the Owner, and if he decides such equipment is to be salvaged, each Contractor shall deliver said equipment to an area within the site boundaries as determined by the Owner and the Architect.

E. The phasing of the work shall be performed in strict accordance with the Construction Manager's construction schedule. The new systems shall be installed and completely commissioned prior to occupancy. Coordinate requirements for temporary heat or rerouting of existing services as required to accomplish the construction schedule.

F. Fire Protection Contractor shall provide all temporary or permanent caps, valves, hangers, drains as required to perform the Fire Protection demolition, relocation and alteration.

3.10 SITE VISIT

A. Before commencing any work under this Section, verify all dimensions, elevations, pipe sizes and locations in the building and examine all adjoining work in which this work is in any way dependent. Visit and investigate all spaces and conditions to become familiar with installation and all requirements prior to bidding.

B. Each bidder shall visit the site and inspect all conditions affecting any aspect of the work. Failure to do so and misinterpretation of the plans and specifications resulting there from shall be entirely the responsibility of the bidder.

3.11 FIRE DEPARTMENT HOSE CONNECTION INSTALLATION

A. Install check valve in fire department pumper connection piping at point of connection to the system. Pitch Fire Department connection piping to drain. Provide automatic ball drip at low point and pipe discharge and spill into floor drain or mop basin. Centerline of pumper connection shall be between 2'-0" to 3'-6" above finish grade.

B. Install Fire Department valves between 3'-6" to 4'-6" above finish floor.

C. Install Fire Department valve Cabinets 4'-6" above finish floor to the top of the cabinet.

D. Install roof manifold 3'-6" above roof. Provide isolation valve at roof access in heated space with tamper switch to indicate the valve is normally closed. Provide manual drain valve and automatic ball drip valve both piped to drain or exterior.

E. Install fire pump test header piping pitched to automatic ball drip. Pipe discharge of drain valve to floor drain. Provide tamper switch on control valve to indicate the valve is normally closed.

3.12 INSTALLATION AND SPACING OF SPRINKLER HEADS

A. Sprinkler Head Installation

1. Sprinkler spacing, densities and design shall comply with NFPA and the Owner's Insurance Underwriter.

B. Location of sprinkler heads in ceiling tiles:

1. Refer to Architectural reflected ceiling plans and room finish schedules for ceiling tile types. Mount sprinklers in center of tiles.

2. Align sprinkler heads with ceiling components such as lighting fixtures, HVAC diffusers and smoke detectors.

C. Provide additional heads as required by NFPA 13, including appendices to protect areas where ceiling head spray pattern is obstructed and below ducts and equipment 4 feet wide or wider. Mechanical room sprinkler layouts shall be based on approved ductwork submittals. Additional sprinkler heads required to provide complete sprinkler protection due to obstructions and/or coordination shall be provided at no additional cost to the Owner.

D. Provide upright heads within stair towers at the top and bottom of the stair tower.

E. Provide sprinkler head spray baffles to shield direct water spray from electrical equipment.

F. Provide sprinkler protection in electric rooms, elevator machine rooms and hoistways. Provide an indicating shut-off valve with tamper switch on the branch line located in an accessible area outside the protected space.

G. Special Conditions:

1. The sprinkler system within the open wells and/or atrium shall be installed in accordance with the Connecticut State Building Code. Sprinklers shall be a minimum of 6' on center around opening and a maximum of 18" off of draft stop. When walking surfaces are on both sides of the glass, sprinklers shall be provided on both sides of the glass.

3.13 TEMPORARY STANDPIPE SYSTEMS

A. All standpipe risers shall continue up through the floors and temporary hose, nozzles and valves provided as required as the floors are erected for fire protection during construction. Standpipes shall be supplied through a temporary Siamese inlet at grade located where directed by the Fire Department. Access to temporary Siamese inlet connection shall be kept clear and accessible at all times. It shall be the responsibility of this Subcontractor to insure this temporary fire protection supply be available at all times. All valves shall be properly adjusted for the maximum pressure setting allowable.

3.14 PREACTION SYSTEM

A. The installation must meet all established standards and be according to all laws, rules and codes in force.

B. The proper operation and the coordination for system installation, including the automatic sprinkler system, detection system, signaling system and initial start-ups are the responsibility of the Fire Protection Contractor.

C. The Contractor must plan and organize a training session of at least two hours for the building maintenance staff, in the presence of the building Owner or his representative.

D. The training session must include the normal operation, emergency procedures and system maintenance.

E. In addition to the standard hydrostatic test, an air pressure leakage test at 50 psi (3.0 bars) shall be conducted for 24 hours. Any leakage that results in a loss of pressure in excess of 1-1/2 psi (0.1 bar) during the 24 hours shall be corrected.

F. A drain test using the auxiliary drain valve fully open (drain located on water supply side, deluge valve inlet) must be performed to make sure that no back pressure in drain piping exists, which could affect the proper operation of the preaction system.

G. An air supply test must be performed, to confirm that normal air pressure can be restored within 30 minutes.

H. The verification of the fire alarm system must be done in accordance with the NFPA 72.

I. An inspection report and certificate must be supplied to the Engineer at the completion of the project.

3.15 VALVE TAGS AND CHARTS

A. All valves on pipes of every description shall have neat circular brass valve tags of at least 1-1/2 inches in diameter, attached with brass hooks to each valve stem. Stamp on these valve tags in letters as large as practicable the number of the valve and the service and zone, such as "S.P.", "D", for standpipe, drain, respectively. The numbers of each service shall be consecutive.

B. These numbers shall correspond to numbers indicated for valves on the record drawings and on two printed detailed lists. These printed lists shall state the numbers and

locations of each valve and the fixture or group of fixtures which it controls, and other necessary information, such as requiring the opening or closing of another valve or valves, when any one valve is to be opened or closed.

C. These printed lists shall be typed and shall be framed under glass, and mounted as directed by the Architect.

D. Copies of charts shall be included in O&M manuals.

3.16 IDENTIFICATION

A. All labeling of piping, materials and equipment, as outlined hereinafter for identification purposes, shall be performed by this Contractor.

B. Piping systems shall be identified with approved snap-on covers designating services and direction of flow. Location of identification covers shall be near access panels wherever possible on each riser and branch main, equipment, and on both sides of valves. The markers shall be as manufactured by WH Brady Co., Westline Products, Seton Name Plate Co., or approved equal.

C. Install markers on cleaned or painted piping only after piping is complete and has been accepted by the Architect.

D. Letters shall not be less than 1-1/2 inches in height. Arrows shall not be less than 9 inches long. Identification shall be installed on pipes above hung ceiling and furred spaces.

E. All systems shall be identified at intervals of approximately 20'', every change of direction and on both sides of wall where pipes pass through walls.

3.17 CORE DRILLING

A. This Contractor shall perform all core drilling required for the installation of the fire protection system. Locate all required openings and prior to coring coordinate the opening with the Construction Manager. Thoroughly investigate the existing conditions in the vicinity of the required opening prior to coring. Care must be taken so as not to disturb the existing building systems. Locate all other openings required for the Construction Manager. Patching of existing walls and openings shall be performed by the respective Trade responsible for the finish material in which the opening is made.

B. Before coring is performed, submit drawings showing location of cores to Structural Engineers for their review.

3.18 CLEANING OF SYSTEMS

A. Refer to Section 210500.

3.19 EQUIPMENT ACCESS REQUIREMENTS AND ACCESS PANELS

A. All work shall be installed so that all parts requiring inspection, operation, maintenance and repair are readily accessible as approved by the Owner. Minor deviations from the Drawing may be made to accomplish this, but changes of magnitude shall not be made prior to written approval from the Architect.

B. Furnish access panels if required in walls and ceilings as required to permit access for adjustment, removal and the replacement and servicing of all equipment, and all other items requiring maintenance and adjustments. Access panels shall be installed by the Trade determined by the Construction Manager.

C. Access panels shall be 12” X 12” minimum size and constructed of steel with primer coat of rust inhibitive paint and shall have continuous piano hinge, as manufactured by Inland Steel Products, Milcor, Walsh-Hannon or approved equal. Panel shall be key operated cylinders, keyed alike. Key lock system shall be coordinated with the Owner and shall be as approved by the Architect. Provide six (6) keys of type used for Owner's use.

3.20 SIGNS

A. Signs and nameplates in accordance with NFPA standards and/or this specification shall be provided at all drains, test and alarm valves and other areas as required by NFPA Standards.

3.21 MATERIALS AND EQUIPMENT HANDLING

A. Refer to Section 210500.

3.22 MAINTENANCE AND PROTECTION OF MATERIALS

A. Refer to Section 210500.

3.23 CLEANUP

A. Refer to Section 210500.

3.24 TESTING AND INSPECTION

A. This Contractor shall obtain and pay for all the inspection and tests required for this Section of the work. Defects discovered in work, materials and/or equipment shall be replaced at no cost to the Owner, and the inspection and test shall be repeated. When work is completed, this Contractor shall furnish a Certificate of Inspection and Approval to the Owner before final payment of the Contract will be allowed.

B. Test sprinkler piping and make watertight before painting and before concealment. Make partial tests as required, during the progress of the work. All tests shall be witnessed by the Owner's representative, Authorities Having Jurisdiction and a representative of the Engineer.

C. Test systems according to provisions of NFPA Standards and the additional requirements of the approving authority and this Section.

D. Modified sprinkler system shall be tested to a hydrostatic test of 200 psi or 50 psi higher than the normal working pressure of the system for (2) hours without loss as specified in NFPA 13.

E. This Contractor shall, with the parties noted herein, establish procedures to witness testing that are acceptable to the parties noted herein. All parties noted herein shall be notified in writing of the accepted testing procedure prior to any testing. This Contractor shall notify parties designated to witness testing at least 48 hours in advance of scheduled testing.

F. Conditions requiring testing in excess of the minimum requirements noted herein shall be performed in accordance with NFPA Standards and any requirements of Authorities Having Jurisdiction.

G. Should the Owner, Engineer or any Authority Having Jurisdiction require, this Contractor shall provide factory trained, manufactures authorized representatives to perform testing on any equipment and/or devices that may be an integral part of this Specification.

H. Dispose of test water and wastes after tests are complete, in a manner satisfactory to the Owner and Local Authorities.

I. Furnish to the Engineer completely executed test certificates with signatures of those required to witness testing. Test certificate forms shall follow NFPA formats as a minimum requirement.

J. Test and certify water flow, pressure and supervisory tamper switches.

K. Test fire department connection piping at 300 psi for one hour.

L. Test and certify water flow, pressure, and supervisory tamper switches.

M. Pre Action Systems: Perform both hydrostatic and pneumatic pressure tests and dry pipe valve operating work test.

1. Hydrostatic Test: Maintain at least 200 psi or 50 psi in excess of the maximum working pressure, for at least two hours.

2. Pneumatic Test: Maintain 40 psi air pressure for 24 hours. Correct all leaks which result in a pressure loss in excess of 1-1/2 psi.

3. Operating Working Test: Perform test and complete Contractor's material and test certificate.

N. Fire Pump: Perform test in compliance with NFPA Standard 20 and complete pump acceptance test data sheets.

1. Notify the authorities having jurisdiction at least three days in advance of the scheduled test.

2. A factory certified pump performance tests shall be done prior to shipment of the unit. Results to be furnished to the Engineer.

O. Complete working tests of all systems in accordance with NFPA standards.

3.25 MANUFACTURER'S REPRESENTATIVE AND COMMISSIONING OF SYSTEMS

A. Refer to Section 150800.

3.26 INSPECTION SERVICE

A. After completion of the fire protection work and at start of the guarantee year, The Fire Protection Subcontractor shall execute the National Automatic Sprinkler and Fire Control Association, Inc. Standard Form of Inspection Agreement without charge to the Owner, calling for 4 inspections of the system during the guarantee year. During the year, inspections shall be made as per the Inspection Agreement plus the following maintenance shall be performed on the last inspection:

1. Operation of all control valves
2. Lubrication of stems of all control valves
3. Operation of all alarms
4. Cleaning of alarm valves and parts

B. The standard form, "Report of Inspection" shall be filled out in triplicate after each inspection and copies sent to the Owner and the Owner's insuring agency.

C. All inspections and maintenance shall be in accordance with applicable NFPA Standards, including NFPA #25, as a minimum. Requirements of Owner's Insurance and other Authorities Having Jurisdictions are also a part of this service.

END OF SECTION 211000

SECTION 220500 – BASIC PLUMBING MATERIALS AND METHODS

PART 1 - GENERAL

1.1 PROVISIONS INCLUDED

A. Include General Conditions, Supplementary General Conditions Division 0 and applicable parts of Division 1 for conditions and Commissioning Section and requirements which may affect the work of this Section.

B. Examine all other Sections of the specifications for requirements which affect work under this Section whether or not such work is specifically mentioned in this Section.

C. Coordinate work with that of all other Trades affecting, or affected by work of this Section. Cooperate with such Trades to ensure the steady progress of all work under the Contract.

1.2 DEFINITIONS

A. Words in the singular shall also mean and include the plural, wherever the context so indicates and words in the plural shall mean the singular, wherever the context so indicates.

B. Wherever the terms "shown on drawings" are used in the specifications, they shall mean "noted", "indicated", "scheduled", "detailed", or any other diagrammatic or written reference made on the drawings.

C. Wherever the term "provide" is used in the specifications it will mean "furnish and install", "connect", "apply", "erect", "construct", or similar terms, unless otherwise indicated in the specifications.

D. Wherever the term "material" is used in the specifications it will mean any product", "equipment", "device", "assembly", or "item" required under the Contract, as indicated by trade or brand name, manufacturer's name, standard specification reference or other description.

E. The terms "approved", or "approval" shall mean the written approval of the Architect.

F. The term "specification" shall mean all information contained in the bound or unbound volume, including all "Contract Documents" defined therein, except for the drawings.

G. The terms "directed", "required", "permitted", "ordered", "designated", "prescribed" and similar words shall mean the direction, requirement, permission, order, designation or prescription of the Architect. The terms "approved", "acceptable", "satisfactory" and similar words shall mean approved by, acceptable or satisfactory to the Architect. The terms "necessary", "reasonable", "proper", "correct" and similar words shall mean necessary, reasonable, proper or correct in the judgment of the Architect.

H. "Piping" includes in addition to pipe or mains, all fittings, flanges, unions, valves, strainers, drains, hangers and other accessories relative to such piping.

I. "Concealed" means hidden from sight in chases, furred spaces, shafts, hung ceilings, embedded in construction or in crawl spaces.

J. "Exposed" means not installed underground or "concealed" as defined above.

K. "Invert Elevation" means the elevation of the inside bottom of the pipe.

L. "Plumbing Contractor" shall refer to the Contractor or his Subcontractors responsible for furnishing and installation of all work indicated on the Plumbing drawings and specifications, as applicable and or referenced to each Trade in the Architectural and/or Structural documents.

M. "Architect" shall refer to "Mitchell Giurgola Architects" and/or Engineer "Bard, Rao + Athanas Consulting Engineers, LLC".

N. "Owner" shall refer to the designated representatives of the Project Owner.

O. "Commissioning Agent (CA)" shall refer to the party employed by the Owner to witness the demonstration of all systems according to the commissioning plan. Refer to Section 019100.

P. "Construction Manager" shall refer to the Construction Manager (CM) for this project.

1.3 CODES, STANDARDS AND REFERENCES

A. All materials and workmanship shall comply with all applicable Codes, Specifications, Local and State Ordinances, Industry Standards and Utility Company Regulations, latest editions.

B. In case of difference between Building Codes, State Laws, Local Ordinances, Industry Standards and Utility Company Regulations and the Contract Documents, the Plumbing Contractor, as applicable, shall promptly notify the Architect in writing of any such difference.

C. In case of conflict between the Contract Documents and the requirements of any Code or Authorities Having Jurisdiction, the most stringent requirements of the aforementioned shall govern for budgetary purposes. However, no work will proceed until the Architect determines the correct method of installation.

D. Should any Contractor, as applicable, perform any work that does not comply with the requirements of the applicable Building Codes, State Laws, Local Ordinances, Industry Standards and Utility Company Regulations, he shall bear all costs arising in correcting the deficiencies, as approved by the Architect.

E. Applicable Codes and Standards shall include all State Laws, Local Ordinances, Utility Company Regulations and the applicable requirements of the following accepted Codes and Standards, without limiting the number, as follows:

1. State of Connecticut Plumbing Code
2. State of Connecticut Building Code – Latest Edition including all adopted Supplements
3. State of Connecticut -- Energy Code
4. Environmental Protection Agency (EPA)
5. State of Connecticut Fire Prevention Regulations and Elevator Regulations
6. Local Ordinances, Regulations of the Local Building Department and Fire Department
7. National Electrical Code (NEC)
8. Recommendations of ASPE (American Society of Plumbing Engineers)

9. National Fire Protection Association (NFPA) Standards

   a. NFPA 45 Standards on Fire Protection for Laboratories Using Chemicals
   b. NFPA 30 Flammable and Combustible Liquids Code
   c. NFPA 101 Life Safety
   d. NFPA 55 Compressed Gases and Cryogenic Fluids

10. Guidelines for Design and Construction of Health Care Facilities
11. Occupational Safety and Health Administration (OSHA)

F. In these specifications, references made to the following Industry Standards and Code Bodies are intended to indicate the accepted volume or publication of the Standard. All equipment, materials and details of installation shall comply with the requirements and latest revisions of the following Bodies, as applicable:

1. ANSI American National Standards Institute
2. ASME American Society of Mechanical Engineers
3. ASTM American Society of Testing Materials
4. CS Commercial Standards, U.S. Department of Commerce
5. FMG Factory Mutual Guidelines
6. FS Federal Specification, U.S. Government
7. MSS Industry Manufacturers Standardization Society of the Valve and Fittings
8. NEMA National Electrical Manufacturers Association
9. NFPA National Fire Protection Association
10. UL Underwriters' Laboratories, Inc.
11. AWS American Welding Society

G. The Plumbing Contractor for the work under his charge, shall give all necessary notices, obtain and pay for all permits, pay all governmental taxes, fees and other costs in connection with his work; file for necessary approvals with the jurisdiction under which the work is to be performed. The Plumbing Contractor shall obtain all required Certificates of Inspection for his work and deliver same to the Architect before request for acceptance of his portion of work and before final payment is made.

H. All equipment shall be installed per manufacturer's recommendations and requirements. The Contractor shall notify the Architect in writing when they intend to deviate from

manufacturer's installation guidelines. The Architect shall advise if the installation is acceptable prior to installation.

1.4 REGULATORY REQUIREMENTS

A. Conform to maximum flame spread / smoke developed rating of 25/50 in accordance with ASTM E84, NFPA 255 and UL 723.

B. Adhesives and sealants shall conform to the requirements of the South Coast Air Quality Management District (SCAQMD) Rule 1168.

1.5 SUBMITTALS

A. Submit detailed shop drawings or brochures for approval of equipment and material proposed to be used on this project in accordance with Division One of the General Requirements.

B. Documents submitted shall show the following:

1. Principal dimensions, and details of construction.

2. Operating and maintenance clearances.

3. Weights of principal parts and total weights with information required for the design of supports and foundations.

4. Sizes and location of piping and connections.

5. Performance data, including pump curves.

6. Data on electric motors, including brake horsepower of driven equipment, nameplate ratings and classes, sound data, starting and running full load currents, required starter size and recommended overload heater ratings.

7. Approval stamp of Underwriters' Laboratory and other authorities having jurisdiction of Contract Drawings requiring such approval.

8. Certified performance guarantees.

9. Minimum scale for plumbing equipment/mechanical rooms shall be 1/4 inch equal 1 foot.

C. Submit brochures that contain only that information which is relative to the particular equipment or materials to be furnished. Do not submit catalogs that describe several different items other than those items to be used unless irrelevant information is marked out and relevant material is clearly marked.

D. Specifications Compliance Statement

1. The manufacturer shall submit a point by point statement of compliance with the specifications.

2. The statement of compliance shall consist of a list of all paragraphs (line by line).

3. Where the proposed system complies fully, such shall be indicated by placing the word “comply: opposite the paragraph number.

4. Where the proposed system does not comply, or accomplishes the stated function in a manner different from that described, a full description of the deviation shall be provided.

5. Where a full description of a deviation is not provided, it shall be assumed that the proposed system does not comply with the paragraph in question.

6. Submissions which do not include a point by point statement of compliance as specified shall be rejected.

1.6 GUARANTEE

A. Attention is directed to provisions of the General Requirements and Supplementary General Conditions regarding guarantees and warranties for work under this Contract.

B. Manufacturers shall provide their standard guarantees for work under this Contract, unless specified otherwise. However, such guarantees shall be in addition to and not in lieu of all other liabilities which the manufacturer and CM may have by Law or by other provisions of the Contract Documents. In any case, such guarantees and warranties shall commence when the Owner accepts the various systems, as applicable and as determined by the Architect. The guarantees and warranties will remain in effect for a minimum period of (1) year thereafter except where longer periods are specifically stated and specified.

C. All materials, items of equipment and workmanship furnished by the Plumbing Contractor shall carry the warranty against all defects in material and workmanship. Any fault due to defective or improper material, equipment, workmanship or design which may develop shall be made good, forthwith, by and at the expense of the Plumbing Contractor responsible, including all other damage done to areas, materials and other systems resulting from this failure.

D. The Plumbing Contractor shall guarantee that all elements of the systems provided under his Contract, are of sufficient capacity to meet the specified performance requirements as set forth herein or as indicated on the drawings.

E. Upon receipt of notice from the Owner of failure of any part of the systems or equipment during the guarantee period, the affected part or parts shall be replaced by the Installing Contractor.

F. The Plumbing Contractor shall furnish, before the final payment is made, a written guarantee covering the above requirements.

1.7 COMMISSIONING

A. The Plumbing Contractor(s) must also include sufficient man-hours within their bids, for their participation with the Commissioning Team meetings and overall process and the rebalancing/readjusting/resetting all device setpoints, as described in Commissioning Section.

B. Commissioning of a system or systems specified in this section is part of the construction process. Documentation and testing of these systems, as well as training of the Owner's operation and maintenance personnel, is required in cooperation with the Owner's Representative and the Commissioning Agent. Project Closeout is dependent on successful completion of all commissioning procedures, documentation, and issue closure. Refer to Execution Requirements for substantial completion details. Refer to Commissioning Section, Commissioning, for detailed commissioning requirements.

1.8 THE CONTRACTOR

A. The Plumbing Contractor shall base his bid on site examinations performed by him. This requirement is mandatory. The Plumbing Contractor shall visit the proposed site where work is scheduled to be performed and ascertain for himself the amount of work required to fulfill the intent of his Contract and the complexity of the installation. The Plumbing Contractor shall not hold the Architect, his Consultants, agents or employees responsible for or bound by, any schedule, estimate or for any plan thereof. The Plumbing Contractor shall study all Contract Documents (HVAC, Fire Protection, Electrical, Architectural, Structural), etc., included under each Contract, to determine exactly the extent of work to be provided under each Section, and in installing new equipment and systems and coordinating the work with the other Trades and existing conditions.

B. The Plumbing Contractor shall faithfully execute his work according to the terms and conditions of the Contract and specifications and shall take all responsibility for and bear all losses resulting to him in the execution of his work.

C. The Plumbing Contractor shall be responsible for the location and performance of work provided under his Contract as indicated on the Contract Documents. All parties employed directly or indirectly by the Plumbing Contractor shall perform their work according to all the conditions as set forth in these specifications.

D. The Plumbing Contractor shall furnish all materials and perform all work in accordance with the project specifications and any supplementary documents provided by the Architect. The work shall include every item shown on the drawings and/or required by the specifications as interpreted by the Architect. All work and materials furnished and installed shall be new and of the best quality and workmanship. The Plumbing Contractor shall cooperate with the Architect so that no error or discrepancy in the Contract Documents shall cause defective materials to be used or poor workmanship to be performed.

1.9 COORDINATION OF WORK

A. The Plumbing Contractor shall compare his drawings and specifications with those of other Trades and report any discrepancies between them to the Architect and obtain from the Architect written instructions for changes necessary in the mechanical or electrical work, to ensure that all work is installed in coordination and cooperation with other Trades installing interrelated work. Before installation, the Plumbing Contractor shall make proper provisions to avoid interferences in a manner approved by the Architect. All changes required in the work of the Plumbing Contractor caused by his negligence, shall be corrected by him at his own expense, to the Architect's satisfaction.

B. Locations of piping and equipment shall be adjusted to accommodate the new work with interferences anticipated and encountered during installation. The Plumbing Contractor shall determine the exact routing and location of his systems prior to fabrication or installation of any system component. Accurate measurements and coordination drawings will have to be completed to verify dimensions and characteristics of the various systems' installations.

C. Lines which pitch shall have the right-of-way over those which do not pitch. For example, waste piping shall normally have the right-of-way. Lines whose elevations cannot be changed shall have the right-of-way over lines whose elevations can be changed.

D. Offsets, transitions and changes of direction in all systems shall be made as required to maintain proper headroom and pitch of sloping lines whether or not indicated on the drawings. The Plumbing Contractor shall provide manual air vents and drains as required for his work to affect these offsets, transitions and changes in direction, as applicable.

E. All work shall be installed in a way to permit access (without damage to other parts) of valves, cleanouts, shock absorbers, traps and all other system components provided under this Contract requiring periodic replacement or maintenance. All piping shall be arranged in a manner to clear the openings of swinging overhead access doors, ceiling tiles and cleaning access doors in ductwork.

   1. Access to any and all components requiring servicing, adjustment, calibration, maintenance or periodic replacement shall be provided so that the Owner's operations personnel can freely gain access without removal of any materials other than the access panel or ceiling tile. Access shall be understood to mean free, clear and unobstructed from the floor up to the device and/or component being serviced.

   2. Fire-rated access doors with closers shall be provided for all rated assemblies.

F. The Contract Drawings are diagrammatic only intending to show general runs and locations of piping, valves, equipment and specialties and not necessarily showing all required offsets, details and accessories and equipment to be connected. All work shall be accurately laid out with other Trades to avoid conflicts and to obtain a neat and workmanlike installation which will afford maximum accessibility for operation, maintenance and headroom.

G. Where discrepancies in scope of work as to what Trade provides items, such as starters, disconnects, flow switches, electric control components, etc., exist, such conflicts shall be reported to the Architect prior to signing of the Contract. If such action is not taken, the Plumbing Contractor, as applicable, shall furnish such items as part of his work, for complete and operable systems and equipment, as determined by the Architect.

H. Where drawing details, plans and/or specification requirements are in conflict and where pipe is shown to be different between plans and/or between plans and sections or details, the most stringent requirement will be included in the Contract. Plumbing systems and equipment called for in the specification and/or shown on the drawings shall be provided under this Contract as if it were required by both the drawings and specifications. However, prior to ordering or installation of any portion of work which appears to be in conflict, such work shall be brought to Architect's attention for direction as to what is to be provided.

I. Final location of all outlets, sinks, faucets and trim shall be coordinated with the Architect’s elevation plans and/or other Architectural details, as applicable. Offsets of piping, added fittings, valves, elbows, flexible connections, etc., shall be provided as required to comply with the Architectural floor plans, elevation plans and/or installation details. Obtain approval of locations of all devices from Architect in the field, prior to installation.

J. Equipment and/or hoods, dishwashers, etc., or other type of equipment shown on the Plumbing or Architectural drawings to be provided with services, such as piping, traps, drains, valves, etc., shall be included under this Contract as applicable, including all piping connections to systems, to make equipment completely operable. Additional piping, valves, flexible fittings, etc., shall be provided to accomplish the above requirement, as required, all as part of this Contract, at no additional cost to the Owner.

1.10 COORDINATION DRAWINGS

A. Before materials are purchased, fabricated or work is begun, the Plumbing Contractor shall prepare coordination drawings in cooperation with all trades for all floors/areas, including buried systems/services (all-Trade-composite at 1/4" scale), showing the size and location of his equipment and lines, in the manner described herein under General Requirements. Any sections of difficult areas shown in the contract documents are for reference only and do not dictate how to layer or install the trades.

B. The HVAC Contractor shall take the lead in the coordination drawing process to produce the Architectural backgrounds. A detailed drawing schedule shall be produced to conform to the scale drawing requirements as herein listed and submitted for review. Coordination drawings are for the CM and Architects/Engineer use during construction and shall not be construed as shop drawings or as replacing any shop drawings. The coordination drawings, when corrected for actual "as-built" conditions, will be reviewed by the Architect, corrected and become the Record Drawings to be submitted to the Owner for his use.

C. The cost of producing and reproducing the drawings will be included under the Contract of each Trade, including the cost or preparation of the Architectural building outlines. This process may include multiple revisions to these drawings which will be

included in the cost. The intent is to provide a fully coordinated set of documents between trades no matter how many times they may have to be redone. The HVAC Contractor shall take the lead to produce the Architectural backgrounds, show all ductwork, piping, etc., and circulate the drawings to any of his Subcontractors and the other Trades (Plumbing, Fire Protection, Electrical, etc.), so that they can indicate all their work as directed by the CM and Architect as required, to result in a fully coordinated installation.

D. In addition to the regular coordination drawing review, the plumbing work will also be reviewed by the Architect/Engineer to ensure that the system and equipment arrangements are suitable to provide maintenance access and service as follows:

1. Valves and instrumentation should be grouped where possible and positioned in accessible locations.

2. Valves on all insulated piping shall be furnished and installed with extended stem handles.

E. Prepare a complete set of computer-based drawings

1. Prepare a complete set of computer based drawings:

2. Format shall be:

a. REVIT (Latest Version)

3. Scale not less than 1/4" scale equals 1'-0", showing basic layout for the structure and other information as needed for preparation of Coordination Drawings.

4. The drawings shall indicate the layout of all specialty tradework as indicated herein and shall be designated as Coordination Drawings.

5. Any drawing requirement to assist the contractor will require:

a. A signed liability release form will be required from the Contractor prior to the release of the disk from the Engineer.

6. For 3-D projects see Section 230510 “3D Building information” for additional information

F. Highlight all fire rated partitions on the Coordination Drawings for appropriate coordination.

G. The main paths for the installation or removal of all MEP & FP equipment from mechanical and electrical rooms shall be clearly indicated on the Coordination Drawings.

H. Each of the specialty trades shall add its work to the base drawings with appropriate elevations and grid dimensions. Specialty trade information shall be required for mechanical rooms, crossovers and for spaces above ceilings where congestion of work

may occur such as corridors and, where required, entire floors. Drawings shall indicate horizontal and vertical dimensions to avoid interference with structural framing, ceilings, partitions and other services. Indicate elevations relative to finish floor for bottom of piping. Sections shown in the contract drawings are diagrammatic only and all trades shall share and coordinate sectional views used.

1. Specialty Trade shall include:

    a. Plumbing system
    b. HVAC piping and associated control systems
    c. Electrical
    d. Sheet metal work
    e. Fire protection system
    f. Automatic temperature control
    g. Fire alarm
    h. Security
    i. Telecommunications
    j. Pneumatic tube
    k. Commissioning Review and Comments

I. Upon completing their portion of the Coordination Drawings, each specialty trade shall sign, date and submit the Coordination Drawings to the CM, Architect/Engineer for review.

J. Where conflicts occur with placement of materials of various trades, the CM shall be responsible to coordinate the available space to accommodate all trades. Any resulting adjustments shall be initialed and dated by the affected specialty trade Contractor. The CM shall then final date and sign each drawing.

K. Fabrication of materials shall not start until Coordination Drawings have been signed, reviewed, and distributed to all parties as indicated herein.

L. Distribution of Coordination Drawings:

1. The CM shall provide one print of each Coordination Drawing to:

    a. Each specialty trade Subcontractor.
    b. Owner.
    c. General Contractor.
    d. Architect (for record purposes).
    e. Engineer.

M. After Distribution

1. Resolve all interferences not previously identified.

N. Coordination Drawings shall include but are not necessarily limited to:

1. Structure. (Beams, cross bracing, columns, gusset plates, etc.).

2. Partition/room layout, including indication of smoke and fire resistance rated partitions.

3. Ceiling layout and heights.

4. Light fixtures.

5. Access panels.

6. Sheet metal, heating coils, heat pumps, grilles, diffusers, duct flanges, and pipe hanger/supports and pipe support steel, guides, expansion compensators, kitchen exhaust access doors, and take-offs from the duct risers, etc.

7. All heating piping and valves.

8. Smoke and fire dampers including access doors.

9. Soil, waste and vent piping.

10. Primary water and gas pipes.

11. Major electrical, fire alarm, and security conduit runs (All sizes) panelboards, feeder conduit and racks of branch conduit (All). Motor control centers, starters and disconnects including shaft coordination for larger conduit riser junction boxes to ensure access for JBs and JBs sized to access all cables, and access to splice cables.

12. Sprinkler piping and heads.

13. All equipment, including items in the Contract as well as Owner Furnished / Contractor Installed (O.F.C.I.) and Owner Furnished / Owner Installed (O.F.O.I.) items.

14. Equipment located above finished ceiling requiring access for maintenance and service. In locations where acoustical lay-in ceilings occur indicate areas in which the required access area may be greater than the suspended grid systems.

15. Rainwater piping

16. Existing conditions, including but not limited to, Mechanical, Plumbing, Fire Protection and Electrical items.

17. ATC panels

18. Cable tray

19. Beam Penetrations

O. All shaft coordination drawings shall be detailed with the appropriate sizes for all ducts, HVAC pipe, conduits, fire protection piping & Plumbing waste, vent, water, gases etc.

Hanger support types, miscellaneous support steel shall be detailed to allow for proper clearances and appropriate insulation thickness. Shaft coordination drawings shall be submitted for review in plan and elevation views.

P. The Architect's response to all requests for information (RFI's) generated by the trade contractors shall be distributed to all other affected trades as if this information was contained in the original contract documents. In other words, the party that issues an RFI is responsible for distributing the information to all affected parties.

Q. The Plumbing Contractor must include in his bid sufficient dollar amounts to coordinate the work of this Contract. This project is complex and will require additional time to coordinate all Trades and allow implementation of the Owners Standards and maintenance serviceability requirements. This requirement shall include, but not be limited to, producing the coordination drawings, as many times and as many drawings as required, to ensure serviceability of equipment, as approved by the Architect.

1.11 RECORD DRAWINGS

A. The Plumbing Contractor shall maintain, current at the site, a set of Contract Drawings for his portion of the work on which he shall accurately show the actual installation of all work provided under his Contract indicating any variation from the Contract Drawings, in accordance with the General Conditions and Supplementary General Conditions. Changes whether resulting from formal change orders, requests for information, or other instructions issued by the Architect shall be recorded. Include changes in sizes, location and dimensions of piping, equipment, etc.

B. The Plumbing Contractor shall indicate progress by coloring-in various pipes and associated appurtenances exactly as they are installed. This process shall incorporate both the changes noted above and all other deviations from the original drawings whether resulting from job conditions encountered or from any other causes.

C. The marked-up and colored-up prints will be used as a guide for determining the progress of the work installed. They shall be reviewed periodically by the Architect and Owner's representatives and they shall be corrected if found either inaccurate or incomplete. This procedure is mandatory. Marked up drawings shall include all flow diagrams, schedules, details and control diagrams.

D. The Plumbing Contractor shall meet at a minimum on a monthly basis, with the Owner's representative to transfer the information from his Plumbing marked-up and colored-up prints to a set which will become the basis for preparation of as-built drawings.

E. Upon completion of the project, each Contractor shall submit his marked-up drawings to the Architect for review and comment. After the Architect reviews and comments on this set of documents, each Contractor shall prepare as-built drawings on CAD using AutoCad (Latest Version). When the work is completed, each Contractor shall provide 2 hard copies to the Architect for submittal to the Owner and disks with all documentation and a set of reproducible drawing plots marked "As-Built" drawings. The Contractor shall bear all costs of producing the CAD "As-Built" drawings,

providing all necessary drawing changes and printing the reproducible drawings for the work under his charge.

1.12 GIVING INFORMATION

A. The Plumbing Contractor shall keep himself fully informed as to the shape, size and position of all openings required for his apparatus and shall give information to the Architect and other Contractors [or Subcontractors] sufficiently in advance of the work so that all openings may be built in advance.

1.13 EQUIPMENT AND MATERIALS

A. Equipment and materials shall be delivered to the site and stored in original sealed containers, suitably sheltered from the elements, but readily accessible for inspection by the Architect until installed. All items subject to moisture damage such as controls, motors, etc., shall be stored in dry, heated spaces.

B. The Plumbing Contractor shall have his equipment tightly covered and protected against dirt, water and chemical or mechanical injury and theft. At the completion of the work, equipment and materials shall be cleaned, polished thoroughly and turned over to the Owner in a condition satisfactory to the Architect. Damage or defects developing before acceptance of the work shall be made good at the Plumbing Contractor's or his Subcontractor’s expense as applicable.

C. The Plumbing Contractor shall make necessary field measurements to ascertain space requirements, for equipment and connections to be provided under his Trade and shall furnish and install such sizes and shapes of equipment to allow for the final installation to conform to the drawings and specifications.

D. Manufacturers' directions shall be followed completely in the delivery, storage, protection and installation of any equipment. Promptly notify the Architect in writing of any conflict between any requirements of the Contract Documents and the manufacturer's directions and obtain the Architect's written instructions before proceeding with the work. Should any Contractor perform any work that does not comply with the manufacturer's directions or written instructions from the Architect, he shall bear all costs to correct any deficiencies that should arise.

E. The Plumbing Contractor shall furnish and install all equipment, accessories, connections and incidental items necessary to fully complete the work under his Contract for use, occupancy and operation by the Owner.

F. Where equipment of the acceptable manufacturers requires different arrangement or connections from those shown, it shall be the responsibility of the Plumbing Contractor to install the equipment to operate properly and in harmony with the original intent of the drawings and specifications. When directed by the Architect, the Plumbing Contractor shall submit drawings showing the proposed installation. If the proposed installation is approved, the Plumbing Contractor shall make all necessary changes in all effected related work provided under other Sections including location of roughing-in connections by other Trades, electrical requirements, piping, supports, insulation, etc.

All changes shall be made at no increase in the Contract amount or additional cost to the other Trades and/or Owner.

G. Testing Agency Labeling Requirements

1. All equipment and materials required for installation under these specifications shall be new and without blemish or defect.

2. Equipment and materials shall be products which will meet with the acceptance of the Authorities Having Jurisdiction over the work and as specified hereinbefore.

3. Where such acceptance is contingent upon having FM Global approval, it shall be provided with FM Global label. Factory manufactured and assembled packaged equipment, such as the examples of equipment listed below, shall have the entire assembled package inspected and labeled by Factory Mutual.

4. All equipment shall meet OSHA standards.

5. All products shall be listed and labeled by UL or other national testing laboratories such as ETL and the products shall be so labeled.

   a. Label of Underwriter's Laboratories, ETL or other nationally recognized testing agency acceptable to the Authorities Having Jurisdiction.

   b. This Labeling shall include not just the control panel and/or motor but all wiring and devices included in the package as a complete package. Note: Providing a series of individually labeled electrical devices that are then assembled into a package does not meet this requirement, the whole assembly must be labeled as an assembly. The manufacturers have the option of having the equipment inspected and labeled at the factory or at the site after installation. This requirement shall supersede any other specification language hereinbefore or hereinafter that requires only portions of the equipment to be labeled.

   c. Some examples of packaged equipment requiring Labeling:

      1) Sump pumpsets
      2) Ejector pumpsets
      3) High purity water system skids (such as RODI units)
      4) Laboratory and/or Medical Air compressor skids
      5) Vacuum pumpsets
      6) Water pressure booster systems

H. All equipment of one type (such as valves, pumps, plumbing fixtures, etc.), shall be the product of one manufacturer.

I. Equipment prepurchased on behalf of the Owner or by the Owner himself, if assigned to any of the Contractors, shall be received, inspected, installed, etc., as if it was

purchased by the Contractors as applicable. All guarantees, service contracts, etc., shall be the same as for all other equipment provided under this Contract.

1.14 CUTTING AND PATCHING

A. The Plumbing Contractor shall be responsible for all core drilling, as required for work under his Contract, but in no case shall he cut into any structural elements without the written approval of the Architect.

B. All cutting, rough patching and finish patching, shall be coordinated and provided under this Contract.

C. All concrete and masonry equipment bases and pads shall be coordinated and provided under this Contract.

1.15 USE OF PREMISES

A. The Plumbing Contractor shall confine all of his apparatus, storage of materials and construction to the limits indicated on the drawings and directed by the Architect and he shall not encumber the premises with his materials.

B. In storing materials within areas (structure or ground), or when used as a shop, the Plumbing Contractor shall consult with the CM and shall restrict his storage to space designated for such purposes. The Plumbing Contractor will be held responsible for repairs, patching or cleaning arising from any unauthorized use of premises.

C. Notwithstanding any approvals or instructions which must be obtained by the Plumbing Contractor from the Architect in connection with use of premises, the responsibility for the safe working conditions at the site shall remain the Plumbing Contractor's. The Architect or Owner shall not be deemed to have any responsibility or liability in connection therewith.

1.16 PROTECTION

A. All materials such as valves, fittings, piping, equipment, etc., shall be properly protected and all piping openings shall be temporarily closed by the Plumbing Contractor or his Subcontractor’s installing same, so to prevent obstruction and damage. The Plumbing Contractor shall take precautions to protect his materials from damage and theft.

B. The Plumbing Contractor shall furnish, place and maintain proper safety guards for the prevention of accidents that might be caused by the workmanship, materials, equipment or electrical systems provided under his Contract.

1.17 DAMAGE CORRECTION AND EXTRA WORK

A. The Plumbing Contractor shall be held responsible and shall pay for all damages caused by his work to the new and existing building structures and new and existing equipment, piping, duct systems, etc., and all work and finishes installed under this Contract in the new or in existing building. Repair of such damage shall be done as

herein before specified, at the expense of the Plumbing Contractor and to the Architect's satisfaction.

B. The Plumbing Contractor shall promptly correct all work provided under his Contract and rejected by the Architect as defective or as failing to conform to the Contract Documents whether observed before or after completion of work and whether or not fabricated, installed or completed. The Plumbing Contractor shall bear all costs of correcting such rejected work.

C. No claim for extra work will be allowed unless it is authorized by the Architect in writing before commencement of the extra said work.

1.18 TOUCH-UP PAINTING

A. The Plumbing Contractor shall thoroughly clean all equipment and systems provided under this Contract from rust, splatters and other foreign matter or discoloration, leaving every part of each system in an acceptable prime condition. The Plumbing Contractor, for the work under his Contract, shall refinish and restore to the original condition all equipment and piping which has sustained damage to the manufacturer's prime and finish coats of paint and/or enamel.

1.19 HOUSEKEEPING PADS

A. The Plumbing Contractor shall coordinate housekeeping pads for:

1. All equipment indoors or outdoors
2. All floor supports or braces

B. Pads shall be 4" high above the finished floor. Pads for steam water heaters shall be a minimum of 18” above finish floor. Contractor shall be responsible for coordinating the required height to allow steam condensate to connect to mechanical equipment by gravity.

C. Each pad shall be a minimum of 6" larger then the equipment, support or isolation base in all directions and shall not obstruct floor drains.

D. Pads shall be formed, poured with concrete, and tooled by the CM.

E. Pads shall not be poured until after the M.E.P. coordination drawings are completed and the equipment shop drawings have been submitted and reviewed.

1.20 PIPE SLEEVES, PLATES AND ESCUTCHEONS

A. Where piping pass through masonry or concrete walls or floors (even if openings are cored), the Plumbing Contractor shall provide and set individual sleeves for each pipe and all other work under his charge, as necessary for passage of all pipes. Sleeves shall be of sufficient size to provide 1/2" air space around the pipe passing through (including insulation where pipes are externally insulated). All openings shall be sealed, smokeproofed and made tight. The Plumbing Contractor shall be responsible for the exact location of sleeves provided under his Contract and shall coordinate all

requirements for piping sleeves. In the event that failure to do so requires cutting and patching, it shall be done at this Contractor's expense.

B. The Plumbing Contractor, for work under his charge, shall determine the required inside diameter of each individual wall opening or sleeve before ordering, fabrication or installation.

C. Sleeves passing through lightproof or soundproof walls and floors and through firewalls shall be sealed and made tight using only approved materials and methods.

D. All wall openings or pipe penetrations shall utilize fire stop materials and assemblies bearing a UL Listed rating. Fire stop, UL Listed details for all applicable pipe material penetrations shall be submitted for review prior to fabrication or installation of any materials.

E. Sleeves and inserts shall not be used in any portions of the building, where their use would impair the strength or construction features of the building. Elimination of sleeves must be approved by the Architect.

F. Provide chrome plated brass escutcheons with set screw for exposed piping, in all areas except in mechanical rooms. In this area use plain brass or cast iron escutcheons suitable for painting. All escutcheons shall be sized to fit the bare pipe or insulation in a snug and neat manner. They shall be of sufficient size to cover sleeved openings for the pipes and of sufficient depth to cover sleeves projecting above floors. Escutcheons shall be as manufactured by Beaton & Caldwell, Dearborn Brass, or Grinnell. All escutcheons shall be of one piece construction.

G. Pipe or duct sleeves shall be made of Schedule 40 pipe, 20 gauge galvanized steel or 16 gauge steel as follows:

1. Sleeves on pipes passing through masonry or concrete construction shall be Schedule 40 pipe.

2. Sleeves on pipes passing through drywall construction shall be 20 gauge galvanized steel.

3. Sleeves on pipes passing through fire rated partitions shall be 16 gauge steel.

4. Sleeves on piping passing through non-rated drywall construction shall be 20 gauge galvanized steel.

H. Pipe sleeves shall be set as follows:

1. Set sleeves 1" above finish floor, (except set sleeves, 6" above finish floor at penthouses or mechanical rooms and 6" above finished roof) and flush on each side of walls. Coordinate roof penetrations with roofing Contractor.

2. Sleeves shall be set securely in place before concrete is poured when placed in concrete construction.

I. Except as otherwise specified, underground piping passing through exterior walls or foundation slabs on grade, shall have penetration closures of the modular mechanical type, consisting of interlocking synthetic rubber links shaped to continuously fill the annular space between the pipe and wall opening. Links shall be loosely assembled with bolts to form a continuous belt around the pipe and with a pressure plate under each bolt head and nut. After the seal assembly is positioned in the sleeve, tightening of the bolts shall cause the rubber sealing elements to expand and provide an absolutely watertight seal between the pipe and wall, reducing chances of cathodic reaction between these members. The Plumbing Contractor for work under his charge shall determine the required inside diameter of each individual wall opening or sleeve before ordering, fabrication or installation. The inside diameter of the wall opening shall be sized to fit the pipe and ensure a watertight joint. Where applicable, when installing seals, take into account the pipe O.D. if non-standard due to coating or jacketing.

1.21 THROUGH PENETRATION FIRE STOP SYSTEMS

A. See Section 220584.

1.22 MISCELLANEOUS IRON AND STEEL

A. Each trade shall provide all primary and secondary steel supports and hangers as shown on the drawings and/or as required to support equipment, piping or any other materials provided under the work of this Section.

B. The work of this Section of designing, furnishing and installing all miscellaneous metal work associated with the system, and related items as indicated on the drawings and/or as specified herein, and includes, but is not limited to the items listed herein below.

C. The scope of work shall include:

1. Intermediate beams to hang piping from the roof. All piping must be hung from beam or supported from the floor. Provide supplemental steel for support of equipment.
2. Support of piping in shafts in addition to support provided by structure.
3. Piping support in underground concrete trench. (Provide galvanized supports/materials)
4. Pipe anchors in the building.
5. Hangers, brackets, angel irons or rods required for the support and protection of Plumbing equipment.
6. Field prime painting of galvanized steel and field finish painting.
7. All supports exposed to the outdoors shall be galvanized supports/materials.

D. Shop Drawings for General Miscellaneous Items

1. Submit Shop Drawings of all miscellaneous metal items to Architect for approval, showing sizes and thickness of all members, types of materials, methods of connection and assembly, complete dimensions, clearances, anchorage, relationship to surrounding work by other Trades, shop paint, and other pertinent details of fabrication and installation.

E. Samples

1. Submit duplicate samples of all materials to be furnished under this Section if, and in size and form, requested by Architect.

F. Do not order materials or begin fabrication until Architect's approval of submittals has been obtained.

G. In addition to the governing laws and codes, the following Specifications and Codes form a part of this Specification:

1. American Iron and Steel Institute applicable standards.

2. American Institute of Steel Construction "Code of Standard Practice for Steel Buildings and Bridges" and "Specifications for the Design, Fabrication and Erection of Structural Steel for Buildings".

3. American Welding Society Code: Standard Code for Arc and Gas Welding in Building Construction.

H. All materials shall be new stock, free from defects impairing strength, durability or appearance and of best commercial quality for each intended purpose.

1. Unless other wise specifically called for, work of this Section shall be fabricated of structural steel conforming to ASTM Specification A36.

2. Steel pipe shall be seamless steel pipe conforming to ASTM Specification A53, Schedule 40.

3. Steel tubing shall be seamless steel tubing conforming to ASTM Specifications A500 to A501.

4. Construction specialties such as slotted inserts, wedge inserts, etc., shall be as manufactured by Hohmann and Barnard, Gateway Erectors, Inc. or Richmond Screw Anchor Co.

5. Non-ferrous metals shall be as specified under descriptions of specific items, herein below.

I. Provide all anchors, bolts, sockets, sleeves, and other parts required for securing each item of work of this Section to the construction, including furnishing to concrete workers all required insets and sleeves for use at concrete.

1. All exposed fastenings shall be of the same material and finish as the metal to which applied, unless otherwise noted.

2. Welding rods shall conform to AWS Standards and the recommendation of the welding rod manufacturer.

3. Shop primer for other ferrous surfaces shall be a high-quality, lead-free, rust-inhibitive primer, Tnemec No. 10-99 Metal Primer or equivalent by Devoe and Raynolds Co.or Carboline.

J. Metal surfaces shall be clean and free from mill scale, flake, rust and rust pitting. Metal work shall be well formed and finished to required shape and size, true to details, with straight, sharp lines and angles and smooth surfaces. Curved work shall be true radii. Exposed sheared edges shall be eased.

K. Weld all permanent connections. Welds shall be continuous on all exposed surfaces and where required for strength on concealed surfaces. Exposed welds shall be ground flush and smooth, with voids filled with metallic filling compound (metallic filling compound not permitted on surfaces to receive hot-dip galvanizing). Tack-welding will not be permitted unless specifically called for. Do not use screws or bolts where they can be avoided. Where used, heads shall be countersunk, screwed up tight, and threads nicked to prevent loosening.

L. Fastenings shall be concealed where practicable. Thickness of metal and details of assembly and supports shall give ample strength and stiffness. Joints exposed to weather shall be formed to exclude water.

M. Do all cutting, punching, drilling and tapping required for attachment of anchor bolts and other hardware and for attachment of work by other Trades. All such cutting, punching, drilling, etc., shall be done prior to hot-dip galvanizing of the various components.

N. Live loads shall be not less than the minimum required by law. Where specific live load are not set forth in the laws and codes applicable to this work, and are not given on the Drawings or in this Specification, designs shall be such as to support the live loads which may normally be imposed without failure, without deflection of more than 1/360 of length of any member, and without permanent deformation, all with a factor of safety of not less than 2 1/2 to 1.

O. Shop Painting

1. All ungalvanized ferrous metals under this Section shall be given a shop coat of rust inhibitive primer of type specified above.

a. Immediately before shop painting, remove all rust, loose mill scale, dirt, weld flux, weld spatter, and other foreign material with wire brushes and/or steel scrapers. Power tool clean in accordance with SSPC SP-3 (Power Tool Cleaning). Remove all grease with oil by use of solvent recommended by paint manufacturer. Sandpaper exposed surfaces as required to produce smooth, even finishes.

b. Apply paint by spray process in strict accordance with manufacturer's printed instructions to uniform thickness(es) recommended by manufacturer. Apply thoroughly and evenly and work well into corners and joints taking care to avoid sags and runs.

c. Do not paint surfaces to be embedded in concrete, or to be welded in the field. After field welds are complete, grind smooth and flush, thoroughly clean and then apply specified primer over all unprimed in the field by brush roller.

d. After erection, sand smooth and retouch all portions of the shop coats chipped or damaged during erection, and coat all field welds and connections with primer equivalent to that used for the shop coat.

P. Installation

1. All materials shall be carefully handled and stored under cover in manner to prevent deformation and damage to the materials and to shop finishes, and to prevent rusting and the accumulation of foreign matter on the metal work. All such work shall be repaired and cleaned prior to erection.

2. Work shall be erected square, plumb and true, accurately fitted, and with the tight joints and intersections. All anchors, inserts and other members to be set in concrete or masonry shall be furnished loose by this Trade to be built-into concrete and masonry and by those Trades as the work progresses. Later cutting or drilling shall be avoided wherever possible.

3. Where members, other than expansion bolts or inserts, are fastened into concrete, set such members in holes formed as specified below, and secure permanently in place by installation of proprietary-type expanding grout manufactured specifically for such purpose, used strictly in accordance with manufacturer's directions. Holes to receive members shall be formed with galvanized sheet metal sleeves, expanded polystyrene foam, or other approved method to provide at least 1/2 inch clearance around entire perimeter. At exposed applications, hold expanding grout back 1/2 inch from finish surface and fill voids with Portland cement grout to match color and texture of surrounding concrete surface.

4. Electrolytic Isolation

a. Where dissimilar metals are to come into contact with one another, isolate by application of a heavy coating of bituminous paint on contact surfaces in addition to shop coat specified above. Do not permit the bituminous paint in any way to remain on surfaces to be exposed or to receive sealant.

Q. Piping supports shall be coordinated with the building structure and shall span between roof beams as required.

1.23 WATERPROOFING, FLASHING AND COUNTERFLASHING

A. Unless specifically indicated otherwise on the drawings, the Plumbing Contractor shall provide all counterflashing and waterproofing of all piping, drains and equipment provided by him, which pierce roofs, walls and other weatherbarrier surfaces. All work under this paragraph shall be coordinated with the CM.

B. All work shall be performed in a workmanlike manner to ensure weatherproof installation. Any leaks developed due to the Plumbing Contractor's work shall be repaired at his expense, to the Architect's satisfaction.

C. Pipes passing through slabs shall have the sleeve extended above floors as hereinbefore specified to retain any water and the space between the pipe and sleeve caulked waterproof fire stopping. The top and the bottom shall be sealed with monolastic caulking compound.

D. All flashing required for piping penetrations shall be provided by the CM.

1.24 PLUMBING IDENTIFICATION

A. See Section 220553.

1.25 VALVE TAGS, NAMEPLATES AND CHARTS

A. See Section 220553.

1.26 ELECTRICAL WORK, MOTORS AND CONTROLLERS

A. See Division 26.

1.27 PARTS LIST AND INSTRUCTIONS FOR OPERATION AND MAINTENANCE

A. The Plumbing Contractor shall thoroughly instruct the representative(s) of the Owner, to the complete satisfaction of the Architect, in the proper operation of all systems and equipment provided by him. The Plumbing Contractor shall make arrangements, via the CM as to whom the instructions are to be given in the operation of the basic and auxiliary systems and the periods of time in which they are to be given. The Architect shall be completely satisfied that the representative of the Owner has been thoroughly and completely instructed in the proper operation of all systems and equipment before final payment is made. If the Architect determines that complete and thorough instructions have not been given by the Plumbing Contractor to the Owner's representative, then the Plumbing Contractor shall be directed by the Architect to provide whatever instructions are necessary until the intent of this paragraph of the specification has been complied with. All time required for Owner's instruction to satisfy the above requirements shall be included in this Contract. No extra compensation for such instructions will be allowed.

B. The Plumbing Contract shall submit to the Architect for approval a total of six (6) typed sets, bound neatly in loose-leaf binders, of all maintenance and operating instructions for the installation, operation, care and maintenance of all equipment and systems. All data and literature furnished shall be specific for the make and model of the equipment furnished. General non-specific catalog data will not be acceptable. Information shall indicate possible problems with equipment and suggested corrective action. The manuals shall be indexed for each type of equipment. Each section such as valves, plumbing fixtures, water heaters, etc., shall be clearly divided from the other sections. A sub-index for each section shall also be provided. The methodology of setting-up the

manuals shall be submitted to the Architect and Owner through the CM for approval prior to final submission of manuals.

C. The instructions shall contain information deemed necessary by the Architect and shall include, but not be limited to, the following:

1. Instructional classes on equipment and systems operation for Owner's representative and maintenance personnel, by engineering staff of each Contractor. Minimum of 48 hours of instruction for minimum of (6) people. Instruction shall include:

   a. Explanation of manual and its use.
   b. Summary description of the Plumbing systems.
   c. Purpose of systems.

2. System

   a. Detailed description of all systems.
   b. Illustrations, schematics, block diagrams, catalog cuts and other exhibits.

3. Operations

   a. Complete detailed, step-by-step, sequential description of all phases of operation for all portions of the systems, including start-up, shutdown, adjusting and balancing. Include all posted instruction charts.

4. Maintenance

   a. Parts list and part numbers.
   b. Maintenance, lubrication and replacement charts and manufacturer's recommendations for preventive maintenance, as applicable to his work.
   c. Troubleshooting charts for systems and components.
   d. Instructions for testing each type of part.
   e. Recommended list of on-hand spare parts.
   f. Complete calibration instructions for all parts and entire systems.
   g. Instruction for charging, filling, draining and purging, as applicable.
   h. General or miscellaneous maintenance notes.
   i. Initial Equipment Start-up reports and run time logs.

5. Manufacturer's Literature

   a. Furnish complete listing for all parts required for models actually furnished.

   b. Names, addresses and telephone numbers of manufacturers and suppliers.

   c. Describe and operation of all models actually furnished.

   d. Furnish all and only pertinent brochures, illustrations, drawings, cuts, bulletins, technical data, certified performance charts and other literature

with the model actually furnished to be clearly and conspicuously identified.

e. Internal wiring diagrams and engineering data sheets for all items and/or equipment furnished under each Contract.

f. Guarantee and warranty data.

6. Each Contractor shall furnish instructions for lubricating each piece of equipment installed by him. Instructions shall state type of lubricant, where and how frequently lubrication is required. Frame instructions under plexiglass and hang in a location as directed by Architect.

1.28 MANUFACTURER'S REPRESENTATIVE AND START-UP OF SYSTEMS

A. The Plumbing Contractor shall provide, at appropriate time or as directed by the Architect, the on-site services of a competent factory trained Engineer or authorized representative of particular manufacturer of equipment provided under his Contract, such as for the pumps, water heaters, etc. provided under this Contract, to instruct the Owner, inspect, adjust and place in proper operating condition any item provided by him, as applicable.

B. The Plumbing Contractor, as applicable, shall start up and set in operating condition all major equipment and systems, such as the hot water system, etc., in the presence of the applicable equipment manufacturer's representatives, and the Owner and Architect's representatives. In no case will major systems and equipment be commissioned by any of the Contractor's forces alone, without the assistance or presence of the equipment manufacturers.

C. A written report shall be issued by the particular equipment manufacturer and the Plumbing Contractor summarizing the results of the start up and performance of each system for the Architect's record. No additional compensation will be allowed for any Contractor for such services.

D. The Plumbing Contractor shall prepare and submit to the Architect for acceptance, a schedule of anticipated system commissioning. No system shall be commissioned without prior acceptance of the schedule by the Architect and Owner. No system shall be commissioned prior to submittal and acceptance of the operations and maintenance manuals.

1.29 ELECTRICAL ROOM REQUIREMENTS

A. The Plumbing Contractors shall not install any piping or equipment in or through electrical rooms, transformer rooms, electrical closets, telephone rooms or elevator machine rooms, unless piping or equipment is intended to serve these rooms. If any Contractor violates this requirement, he shall remove and/or relocate all items as required at his expense and to the satisfaction of the Architect.

1.30 HOISTING EQUIPMENT AND MACHINERY

A. All hoisting equipment and machinery required for the proper and expeditious prosecution and progress of the work under this Contract shall be furnished, installed, operated and maintained in safe condition by the Plumbing Contractor for his material and/or equipment delivered to the designated hoisting area. All costs for hoisting operating services shall be borne by the Plumbing Contractor for all equipment and work under his charge.

1.31 STAGING

A. All staging, exterior and interior, required to be over 8'-0" in height shall be furnished and erected by the Plumbing Contractor for work under his charge and maintained in safe condition by him for proper execution of his work.

1.32 PHASING, DEMOLITION AND MAINTAINING EXISTING SERVICES

A. During the execution of the work, required relocation of existing equipment and systems in the existing areas where new work and connections are scheduled to be made shall be performed by the Plumbing Contractor as indicated on the drawings, as required by the job conditions and as determined by the CM in close cooperation with the Architect and Owner's designated representative to facilitate the installation of the new systems and completion of this Contract. The Owner will require the continuous operation of all existing systems while demolition relocation work of new tie-ins is being performed. Outages required for construction purposes shall be scheduled for the shortest practical periods of time, in coordination with the Owner's designated representative for specific, mutually agreeable periods of time after each of which the interruption shall cease and service shall be restored. This procedure shall be repeated to suit the Owner's working schedule as many times as required until all work is completed.

B. Prior to any deactivation and relocation, capping, valving, tie-in or demolition work, consult the drawings and arrange a conference with the Architect and the Owner's representative in the field to inspect each of the items to be deactivated, removed or relocated. Care shall be taken to protect all equipment designated to be relocated and reused. Give notice to all parties, with a minimum of (10) working days in advance.

C. All draining of existing systems, filling and venting required to remove and relocate existing piping systems shall be included and provided under this Contract as required to perform the various equipment or piping relocations or new tie-ins.

D. Except as otherwise noted, all deactivation, safe capping, valving, etc., of systems designated to be demolished shall be provided by the Plumbing Contractor, as applicable, and all demolition, removal and disposal of demolished materials shall be performed by the CM. All equipment scheduled to be removed shall be inspected by the Owner, and, if he decides that such equipment is to be salvaged, the Plumbing Contractor shall deliver said equipment to an area within the site boundaries as determined by the Owner and Architect.

E. The phasing of the work shall be performed in strict accordance with the CM construction schedule. The new systems will be installed and completely commissioned

prior to occupancy. Coordinate requirements for temporary heat or rerouting of existing services as required to accomplish the construction schedule.

F. The Plumbing Contractor shall follow and comply with the Owner's Shut-down Notification Procedures.

G. Plumbing Contractor shall provide all temporary or permanent caps, valves, hangers, drains, vents as required to perform the Plumbing demolition, relocation and alteration.

1.33 CROSS AND INTERCONNECTIONS

A. No plumbing fixtures, equipment, device or piping shall be installed which will provide a cross or interconnection between a distributing supply or a drainage system, waste or soil pipe which will permit or make possible the backflow of sewage, polluted water or waste into the domestic water supply system.

1.34 CONNECTIONS TO EQUIPMENT

A. Furnish and install waste and vents, traps, cold water, hot water, non-domestic cold and hot water, laboratory gases, piping, shutoffs, backflow preventers, pressure reducing valves, vacuum breakers, shock absorbers, regulators and flexible tubing for all final connections to laboratory equipment, casework and sinks provided under other Sections. Roughing for this equipment shall be as indicated on the drawings.

B. The Plumbing Contractor shall provide all pipe connections, drains, overflows, shock absorbers**,** relief valves and vents, power connections, etc., to make equipment operable, as provided under other Sections of the specifications, as shown on the Architectural and/or each Trade's drawings and herein specified, including final connections to equipment to result in a complete system, fully operational. Coordinate location of all equipment with Architect. Obtain installation diagrams and methods of installation of all equipment from manufacturers. Follow instructions strictly. If additional information is required, obtain same from Architect. If equipment is indicated on the Architectural drawings, it shall also be construed and understood by the Plumbing Contractor to be constructed as shown on the Plumbing drawings and shall be fully serviced and connected at no extra cost to the Owner.

C. Obtain exact roughing in dimensions from manufacturers of all service locations before connecting to or roughing for equipment. Provide shutoff valves at each piece of equipment.

D. Owner provided equipment shall be furnished and set under other Sections. Roughing for and final connections to including piping shall be provided by this Contractor. Equipment included shall be (but not limited to):

1. Preformed sink tops
2. Sterilizers, glasswashers
3. Laboratory casework and trim

1.35 SUSTAINABLE DESIGN INITIATIVES

A. The project has been designed under the USGBC LEED – NC Version 2.2 Green Building Rating System. Contractor responsibilities relative to the LEED Certification process in general and credit documentation in particular are defined in Division 1.

B. Plumbing systems and equipment with particular emphasis on sustainable design and integral to LEED Certification include, but are not limited to, the following:

1. Premium Efficient Motors
2. Low Flow Plumbing Fixtures
3. Low VOC Sealants and Adhesives
4. Construction IAQ Management Plan

1.36 ALTERNATES

A. General

1. Related requirements specified elsewhere:

a. Summary of Work
b. Alternates

B. Description

1. This section describes the changes to be made under each alternate.

2. Alternate proposals shall include the difference in price (addition or deduction from the base bid, for substitutions, omitting or adding to materials or construction required by the Bidding Documents as part of the base bid construction work.

3. The difference in price shall include all omissions, additions, adjustments of all trades as may be necessary because of each change.

4. Coordinate pertinent related work and modify surrounding work as required to complete the project under each alternate designated in the Owner Contractor Agreement.

C. Schedule of Alternates

PART 2 - PRODUCTS

2.1 NOT USED

PART 3 - EXECUTION

3.1 NOT USED

END OF SECTION 220500

SECTION 220510 – UNDERGROUND PLUMBING

PART 1 – GENERAL

1.1 RELATED DOCUMENTS

A. Drawings and General Provisions of the contract, including General and Supplementary Conditions, Section 22 0500 and other Division 1 Specification sections apply to this section.

1.2 WORK INCLUDED

A. The work under this Contract shall include all labor, materials, tools, equipment, transportation, insurance, temporary protection, supervision and incidental items essential for proper installation and operation, though not specifically mentioned or indicated but which are usually provided or are essential for proper installation and operation of all systems related to this Section, the scope shall include but shall not be limited to the following:

1. Incoming water service to a point 5'-0" outside building foundation wall.
2. Underslab soil, waste and vent to a point 5'-0" outside building foundation wall.
3. Coordination with all exterior and tunnel utilities.
4. Underslab rainwater piping to a point 5'-0" outside building foundation wall.
5. Underslab trap primer piping.
6. Floor drains, floor cleanouts and area drains.
7. Fees, permits.
8. Guarantees.
9. Sleeves in foundation walls and structural grade beams.
10. Piping and fittings.
11. Record as-built drawings.
12. Testing, disinfection and certificates.
13. Coordination with foundation drainage system.
14. Coordination with structural footings and foundations.

1.3 RELATED SECTIONS

A. Examine drawings and criteria sheets and other sections of the specifications for requirements which affect work under this Section whether or not such work is specifically mentioned in this Section.

1. Section 220500 – Basic Plumbing Materials and Methods
2. Section 220529 – Hangers and Supports
3. Section 220548 – Plumbing Vibration Control and Seismic Restraints
4. Section 220553 – Plumbing Identification
5. Section 220584 – Through Penetration Firestop Systems
6. Section 221110 – Plumbing Valves
7. Section 221130 – Drainage and Vent Piping
8. Section 221140 – Plumbing Specialties
9. Section 223000 – Plumbing Equipment
10. Section 224000 – Plumbing Fixtures

11. Section 226000 – Laboratory Plumbing Systems

1.4 SUBMITTALS

A. Refer to Section 220500.

B. Submittals – The following documents shall be provided:

1. Pipe and fittings for each system.

1.5 QUALITY ASSURANCE

A. Refer to Section 014000 – Quality Requirements.

B. All cast iron pipe and fittings shall be marked with the collective trade mark of the Cast Iron Soil Pipe Institute (CISPI) and be listed by NSF International.

1.6 DELIVERY AND STORAGE PROTECTION

A. Accept materials on site, labeled with manufacturer's identification.

B. All materials shall be properly protected and all piping openings shall be temporarily closed by the Plumbing Contractor to prevent obstruction and damage. The Plumbing Contractor shall take precautions to protect his material from damage and theft.

PART 2 – PRODUCTS

2.1 PIPING, FITTINGS AND JOINTS

A. Hub and Spigot Cast Iron Soil Pipe and Fittings

1. Below Ground Soil, Waste, Vent and Rainwater Piping

a. Asphaltum coated, service weight, cast iron pipe and fittings with resilient neoprene push-on joints, ASTM A72, ASTM C564 and shall meet the requirements of CISPI 301. All pipe and fittings shall be made in the United States and marked with the CISPI trademark. All pipe and fittings shall be of the same manufacturer.

b. Resilient Neoprene gaskets for 4" and smaller shall be lubricated as per manufacturer's recommendations and for 5" and larger an adhesive type lubricant shall be used. Gaskets shall be of the same manufacturer as the pipe and fittings.

B. Polypropylene Piping

1. Below Ground Laboratory Waste

a. Schedule 40, ASTM D4101, Electro fusion or socket fusion joints as manufactured by Orion, Enfield or George Fischer or Asahi.

C. Copper Tubing and Fittings

1. Trap Primer Piping

a. Tubing to be Type K, soft temper brazed joints with bituminous coating conforming to ASTM B88 and fittings conforming to ASME B16.22 (no joints if possible).

D. Below Ground Water Service

1. Class 52 ductile iron pipe with cement lining, ANSI, AWWA C-A21.10, ANSI/AWWA C104-A21.4, ANSI C111-A21.11.

2. Fittings and special castings shall be Class 250 cement lined ductile iron and shall conform to ANSI A21.10. And A21.11. Joints shall be made with push-on Tyton joints or screwed flanges and shall be rodded and clamped. Incoming water services shall be provided with two (2) Dresser model 38 flexible couplings or approved equal.

2.2 PIPE SLEEVES, PLATES AND ESCUTCHEONS

A. Refer to Section 220500.

2.3 DRAINAGE SPECIALTIES

A. Before setting any drains, cleanouts or wall plates, obtain from the General Contractor the exact information relative to the finished grades of the top of the drains, equipment locations and partition locations. All drainage specialties shall be of the size noted on the drawings and shall be equal to the figure numbers scheduled below. Drainage specialties may be J.R. Smith Company, Zurn, Josam, Watts or Mifab.

B. Cleanouts

1. See Section 221140.

C. Floor Drains, Trench Drains and Area Drains

1. All floor drains and area drains shall be the product of one manufacturer such as J.R. Smith, Josam, Watts, Zurn or Mifab.

2. See Section 221140.

PART 3 - EXECUTION

3.1 EXAMINATION / PREPARATION

A. Inspect existing site conditions in areas where piping and equipment will be installed and verify existing systems and the impact of the proposed modifications before fabricating systems to be installed.

B. Notify the Architect immediately regarding any substantially different conditions than those shown in the Contract Documents.

3.2 SOIL, WASTE, VENT AND RAINWATER PIPING INSTALLATION

A. Pipes shall be plumb and parallel to building walls, beams, and columns. All horizontal lines are to be evenly pitched. A minimum pitch of 1/8" per lineal foot shall be maintained on all soil, waste, and rainwater lines for 4” and larger and 1/4” for 3” and smaller.

B. Trenches shall be wide enough to assemble the pipe joints. The trench bottom shall be stable enough to support the complete barrel of the pipe. Holes shall be provided at each joint or coupling to allow for continuous support of the barrel along the trench.

C. Threaded joints shall have American National taper screw thread with graphite and oil compound applied to the male threads.

D. Piping to be run straight and plumb and all offsets shall be made at an angle of not less than 45° and all threaded joints shall be as specified above.

E. Carefully lay out the work in advance so that the pipes will pass through the opening and permit the proper pitch to the pipelines. Flush out and clean all existing soil and waste piping buried within the existing building prior to making any new connections.

F. Provide and connect cleanouts with brass caps and screws same size as pipe up to 6" and not less than 6" for larger piping at the ends of all branches on soil and waste piping, and in such other portions of the piping where run is over 50’-0".

G. Where stacks enter drains near walls or piers causing difficult access to end cleanouts, there shall be a vertical cleanout on the stack just above the floor with a 1/4 bend fitting at the foot of the stack.

H. Where such conditions occur in walls or partitions, the cleanout cover shall be accessible through an opening left in the wall and covered with the flush chrome plated brass plate or access panel securely fastened in place.

I. Brass cleanouts shall be solid nut construction.

J. Provide the Owner with an appropriate style wrench for removing each type of cleanout plug installed.

K. Where test tees are installed at the base of the stack, or on the stack, they may be used as a cleanout.

3.3 TESTING OF PIPING SYSTEMS

A. General

1. All piping systems shall be subjected to testing with water as noted and shall hold tight at the pressure head stated for the time interval required without adding water. While any system is being tested, required head or pressure shall be maintained until all joints are inspected.

2. All tests shall be witnessed by the inspector having jurisdiction and the Architect/Engineer, with 48 hour notice given these authorities.

3. All equipment, material and labor required for testing any of the various systems or any part thereof shall be furnished by this Contractor.

B. Sanitary, Waste and Vent, Rainwater and Laboratory Waste Systems: Hydrostatic water test shall be applied to drainage systems prior to backfilling either in their entirety or in sections as required, after piping has been installed. If applied to the entire system, all openings in the piping system shall be tightly closed, except the highest opening, and the system filled with water to point of overflow. If the system is tested in sections, each opening shall be tightly closed except the highest opening in the section under test, and each section shall be filled with water but no section shall be tested with less than a 10’-0" head of water. In testing successive sections at least the upper 10’-0" of the next preceding section shall be tested so that no joint of piping in the building, except the uppermost 10’-0" of the system, shall be submitted to a test of less than a 10’-0" head of water. The water shall be kept in the sanitary waste and vent and rainwater system for at least (30) minutes before inspection starts and 2 hours for the laboratory waste system.

C. Defective Work: If inspection or tests show defects, such defective work or material shall be replaced and inspection and tests shall be repeated. All repairs to piping shall be made with new materials. No caulking of screwed joints or holes will be acceptable.

D. Once testing is complete, the piping shall be backfilled. Backfilling shall be done in six inch layers with each layer being tamped thoroughly prior to the next layer being installed.

3.4 LABORATORY WASTE AND VENT PIPING INSTALLATION

A. Install laboratory waste and vent piping system entirely separate from other sanitary systems. The laboratory waste and vent piping shall be of the same material as specified. Fittings used for laboratory waste piping shall be components of the same system as the piping materials. All piping shall have a minimum pitch of 1/8” per lineal foot for 4” and larger and 1/4” for 3” and smaller. The system shall drain by gravity to the waste treatment system. Install, support and protect piping as directed by the product manufacturer. The installation shall allow for expansion and contraction. Plastic piping shall not be installed at temperatures lower than 60°F.

B. The contractor shall be responsible for the purchase of the proper machines/equipment/tools required to be used for the appropriate installation of the piping system in accordance with the manufacturer’s requirements and installation guidelines. An onsite installation training seminar shall be conducted by a factory

trained representative. All installers shall be required to be certified prior to installation. Installer certifications must be submitted prior to installation.

C. Trenches shall be wide enough to assemble the pipe joints. The trench bottom shall be stable enough to support the complete barrel of the pipe. Holes shall be provided at each joint or coupling to allow for continuous support of the barrel along the trench.

D. Piping to be run straight and plumb and all offsets shall be made at an angle of not less than 45 degrees.

E. Carefully lay out the work in advance so that the pipes will pass through the opening and permit the proper pitch to the pipelines.

F. Provide and connect cleanouts with caps and screws same size as pipe up to 6” and not less than 6” for larger piping at the ends of all branches on laboratory waste piping and in such other portions of the piping where run is over 50’-0”.

G. Where stacks enter drains near walls or piers causing difficult access to end cleanouts, there shall be a vertical cleanout on the stack just above the floor with a 1/4 bend fitting at the foot of the stack.

3.5 IDENTIFICATION OF SYSTEMS

A. Refer to Section 220553.

END OF SECTION 220510

SECTION 220529 – HANGERS AND SUPPORTS

PART 1 – GENERAL

1.1 RELATED DOCUMENTS

A. Drawings and general provisions of the Contract, including General and Supplementary Conditions, Section 220500 and other Division 1 Specification Sections, apply to this Section.

1.2 WORK INCLUDED

A. Furnish and install all hangers, supports and assemblies for all parts of the Plumbing systems. This shall include all piping and equipment specified in this Division and as shown on the drawings

B. All materials shall be new and manufactured for the specific purpose of supporting systems, equipment, pipes and accessories.

C. All system components shall be installed in accordance with local codes including seismic isolation as required and specified under Section 220548.

D. Secure all permits and local/state approval for the components as specified and included under this Section.

1.3 RELATED SECTIONS

A. Examine all drawings and criteria sheets and all other Sections of the Specifications for requirements which affect work under this Section whether or not such work is specifically mentioned in this Section.

1. Section 220500 – Basic Plumbing Materials and Methods
2. Section 220529 – Hangers and Supports
3. Section 220548 – Plumbing Vibration Control and Seismic Restraints
4. Section 220553 – Plumbing Identification
5. Section 220584 – Through Penetration Firestop Systems
6. Section 221120 – Plumbing Distribution Piping
7. Section 221130 – Drainage and Vent Piping
8. Section 221140 – Plumbing Specialties
9. Section 223000 – Plumbing Equipment
10. Section 224000 – Plumbing Fixtures
11. Section 226000 – Laboratory Plumbing Systems

1.4 REFERENCES

A. Applicable provisions of the following Codes and Trade Standard Publications shall apply to the work of this Section, and are hereby incorporated into, and made a part of the Contract Documents.

1. Material standards shall be as specified or detailed hereinafter and as following:

   a. ASME B31.9 – Building Services Piping, The American Society of Mechanical Engineers.

   b. ASME B31.1 – power piping.

   c. ASTM F 708 – Standard Practice for Design and Installation of Rigid Pipe Hangers.

   d. MSS SP-58 – Pipe Hangers and Supports – Materials, Design and Manufacture; Manufacturers Standardization Society of the Valve and Fittings Industry.

   e. MSS SP-69 – Pipe Hangers and Supports – Selection and Application; Manufacturers Standardization Society of the Valve Fittings Industry.

   f. MSS SP-89 – Pipe Hangers and Supports – Fabrication and Installation Practices; Manufacturers Standardization Society of the Valve and Fittings Industry.

   g. NFPA-13 – Installation of Sprinkler Systems

   h. MSS-SP-127-2001 – Bracing for Piping Systems.

1.5 SYSTEM DESCRIPTION

A. In addition to special hangers and supports specified elsewhere in this Section and shown on the drawings for piping and equipment, furnish and install safe and substantial means of support for all parts of the Plumbing systems. Shop drawings shall be submitted for review and approval for all supports. All piping and supports in all mechanical rooms and penthouses shall be installed with vibration isolators and Seismic restraints. This requirement is mandatory and shall be strictly enforced.

B. All piping shall be hung to true alignment, using appropriate and substantial hanger arrangements. Wire and strap hangers will not be permitted. Hangers shall be located so that piping and hangers will be clear of other piping, hangers, conduits, lighting and other obstructions.

C. The hanging and supporting of piping and equipment shall conform to recommendations of the manufacturers of same and American National Standard, ANSI/MSS SP-58 and SP-69 latest edition, except where requirements of this specification exceed the above referenced Standards.

1.6 SUBMITTALS

A. See Section 220500 and General Conditions for additional requirements.

B. All brackets and hangers shall be submitted for review. Include the method of hanging and supporting all piping and equipment.

C. The Architect is to be notified when the first bracket is assembled so that the installation can be reviewed in the field.

D. Provide location of all inserts to be used for hanging piping and equipment and the weight of all components (including water weight).

1.7 QUALITY ASSURANCE

A. Manufacturer: Company specializing in manufacturing products of the type specified in Part 2 – Products.

B. Installer: Company specializing in performing work of the type specified in this section, with documented experience.

C. Welders: Certify in accordance with ASME.

1.8 REGULATORY REQUIREMENTS

A. Conform to ASME B31.9 code for installation of piping system and supports.

B. Conform to ASME B31.1 code for power piping.

C. All applicable seismic codes.

D. ASTM F708 for design and installation of pipe hangers.

E. Welding Materials and Procedures: Conform to ASME (BPV IX) and applicable state labor regulations

1. Provide certificate of compliance from Authority Having Jurisdiction, indicating approval of welders.

1.9 DELIVERY, STORAGE AND HANDLING

A. All hangers and supports shall be delivered in containers and shall be kept in a dry and protected area.

B. All exposed hangers, supports, etc. shall be given 2 coats of rust resistant paint of a color selected by the Architect prior to installation.

1.10 ENVIRONMENTAL

A. Do not paint or install inserts, hangers and/or supports when environmental conditions are outside the specific limitations of the referenced codes and manufacturer's recommendations.

PART 2 – PRODUCTS

2.1 GENERAL

A. Pipe supports shall be of type and figure number as specified.

B. Acceptable manufacturers subject to compliance with the specifications shall be as follows:

1. Pipe Hangers

a. Carpenter & Patterson
b. B-Line
c. Grinnell
d. National Pipe Hanger Corp.
e. Piping Technology & Products Inc.
f. PHD Manufacturing, Inc.

2. Constant Force Hangers.

a. Anvill International, Inc.
b. Piping Technology & Products Inc.
c. Piping Accessories, Inc.
d. Rilco Manufacturing Co.
e. PHD Manufacturing, Inc.

3. Channel Support Systems

a. B-Line Systems, Inc.
b. Grinnell Corp. Power-Strut Unit
c. GS Metals Corp.
d. Michigan Hanger Co., Inc. O-Strut Div.
e. National Pipe Hanger Corp.
f. Thomas & Betts Corp.
g. Unistrut Corp.
h. Wesanco, Inc.

4. Thermal-Hanger Shield Inserts

a. Carpenter & Patterson, Inc.
b. Michigan Hanger Co., Inc.
c. PHS Industries, Inc.
d. Pipe Shields, Inc.
e. Rilco Manufacturing Co., Inc.
f. Value Engineered Products, Inc.

2.2 PIPE HANGERS

A. Bracket assemblies for supporting piping are to be fabricated by welding and all irregular surfaces are to be smoothed up by grinding. Shop drawings shall be submitted for review for each type bracket. The Architect is to be notified when the first bracket

is assembled so that installation can be reviewed in the field. Exposed hangers, supports and brackets are to be given (2) coats of rust resistant paint of the color as selected by the Architect. Additionally, provide for Architect's review, the following:

1. Location of all inserts to be used for hanging piping where applicable and the weight of such pipe or equipment to be hung, including the weight of water, valves and insulation.

2. Method of hanging and support of all piping and other equipment.

B. All pipe supports shall be of type and arrangement as hereinafter specified. They shall be so arranged as to prevent excessive bending stresses between supports.

C. All bracket clamp and rod sizes indicated in this specification are minimum sizes only. This Section shall be responsible for structural integrity of all supports. All structural hanging materials shall have a safety factor of (5) built in. Beam clamps shall be 2-sided steel clamps designed to firmly attach to the flange of the beam with the load directed downward on the centerline of the beam web. Beam clamps shall be similar to B-Line #B3055 or approved equal.

D. Other forms of hangers and supports shall be used to accommodate special or unusual job conditions or conditions not covered herein, subject to the approval of the Architect. When special conditions require the use of concrete inserts which are not "built in", such inserts may be used in locations approved by the Architect and shall be similar to Phillips "Red Head" or approved equal. Explosive powder studs or detonator assisted studs or anchors will not be permitted.

E. All pipes shall be hung free of dependence on pipe sleeves for support.

F. All auxiliary steel required for pipe and equipment supports shall be furnished and installed by the Plumbing Contractor.

G. Threaded pipe, chains, wire and perforated straps will not be accepted. No piping shall be supported from ductwork, conduit or other piping. All system components and equipment shall be independently supported. Distribute hangers on parallel piping to avoid overloading of structure.

H. Hangers and supports used for systems exposed to weather shall be hot dipped galvanized in accordance with ASTM A153-73 or A123. Rods and nuts shall be electro-galvanized.

I. All horizontal water, drain, waste, vent and rainwater piping shall be hung with clevis steel hangers similar to B-Line #B3100. Groups of pipes in the same horizontal plane and with the same pitch may be supported on B-Line #3160 gang hangers. Wall brackets shall be similar to B-Line #B3066 and #B3077.

J. Unless otherwise noted, maximum pipe hanger spacing shall not exceed the recommendations of the pipe manufacturer and the following:

Horizontal

1. Copper Tubing up to 1-1/4": 6'-0" o.c.
2. Copper Tubing 1-1/2" and larger: 10'-0" o.c.
3. Cast Iron Pipe: 5'-0" o.c.
4. Steel Pipe: 12'-0" o.c.
5. Stainless Steel up to 1-1/4": 6’-0" o.c.
6. Stainless Steel 1-1/2" and larger: 10’-0" o.c.
7. Polypropylene (Lab waste) 1-1/2" and smaller: 4’-0" o.c.
8. Polypropylene (Lab waste) 2" and larger: 8"-0" o.c.
9. Polypropylene/PVDF (pure water): 5"-0" o.c.
10. In addition, hangers shall be installed within 2'-0" of each change in direction and on each side of valves 3" in size and up.
11. All piping shall be supported vertically at each floor and at the base of all risers.

K. Hanger rods shall be of steel and not less in diameter than:

1. For pipe 2" and under: 3/8"
2. For pipe 2 1/2" and 3": 1/2"
3. For pipe 4" and 5": 5/8"
4. For pipe 6": 3/4"
5. For pipe 8", 10" and 12": 7/8"
6. For pipe 14" and 16": 1"
7. For pipe 18" and up: 1 1/4"

L. Hangers for polypropylene and PVDF pure water piping shall be a trough V-bottom clevis hanger with continuous angle 18 gauge galvanized steel support similar to B-Line #B3106V.

M. Insulated piping shall be fitted with 16 gauge steel covering protectors at each hanger location similar to B-Line #B3151.

N. Hangers for uncovered (uninsulated) copper or brass piping, including medical gases, shall be factory-applied plastic-coated steel band or copper plated.

O. All vertical piping shall be supported with steel riser clamps similar to B-Line #B3773. Such clamps on copper tubing shall be applied over couplings only.

P. Drop rods for hangers may be used wherever possible and shall be installed prior to slabs being poured. Drop rod details shall be submitted to the Architect and Engineer for review.

2.3 MISCELLANEOUS MATERIALS

A. Mechanical-Anchor Fasteners: Insert-type attachments with pull-out and shear capacities appropriate for supported loads and building materials where used.

B. Structural Steel: ASTM A 36M, steel plates, shapes, and bars, black and galvanized.

C. Grout: ASTM C 1107, Grade B, factory-mixed and packaged, nonshrink and nonmetallic, dry, hydraulic-cement grout.

1. Characteristics: Post hardening and volume adjusting recommended for both interior and exterior applications.

2. Properties: Nonstaining, noncorrosive and nongaseous

3. Design Mix: 5000-psi, 28-day compressive strength.

PART 3 – EXECUTION

3.1 PREPARATION

A. Provide inserts for placement in concrete formwork.

B. Provide inserts for suspending hangers from reinforced concrete slabs and sides of reinforced concrete beams.

C. Provide hooked rod to concrete reinforcement section for inserts carrying pipe over 4 inches.

D. Where concrete slabs form finished ceiling, locate inserts flush with slab surface.

3.2 INSTALLATION

A. Pipe Hangers and Supports.

1. Install in accordance with ASME B31.9, ASTM F 708, or MSS SP-89 or NFPA-13.

2. Support piping and equipment as specified under Part 2.

3. Install hangers to provide minimum ½ inch space between finished covering and adjacent work.

4. Place hangers with 24 inches of each horizontal elbow and on each side of valves 3” in size and up.

5. Use hangers with 1-1/2 inch minimum vertical adjustment. Design hangers for pipe movement without disengagement of supported pipe.

6. Support vertical piping at every floor. Support riser piping independently of connected horizontal piping.

7. Where several pipes can be installed in parallel and at same elevation, provide multiple or trapeze hangers.

8. Provide copper plated hangers and supports for copper piping or between hanger support and piping.

9. Provide clearance in hangers and from structure and other equipment for installation of insulation and access to valves and fittings.

B. Where pipe support members are welded to structural building framing, scrape, brush clean and apply two coats of zinc rich primer to welds.

3.3 INSERTS

A. Use inserts for suspending hangers from reinforced concrete slabs and sides of reinforced concrete beams.

B. Set inserts in position in advance of concrete work. Provide reinforcement rod in concrete for inserts carrying pipe over 4 inch.

C. Finish inserts, flush with slab surface.

D. Inserts: Steel, slotted type, factory-painted.

1. Single rod: Similar to Grinnell Figure 281.
2. Multi-rod: Similar to Carpenter and Paterson 1480 Type 1.
3. Clip form nails flush with inserts.
4. Maximum load 75 percent of rating.

3.4 SUPPORTS FROM BUILDING CONSTRUCTION

A. Inserts, Beam Clamps, Steel Fishplates (in concrete fill only), Cantilever Brackets or Other Means.

B. Submit for Review.

C. Grouped Lines and Services

1. Trapeze Hangers fabricated of Bolted Angles or Channels.

D. Where Building Construction is Inadequate

1. Provide Additional Framing.
2. Submit for Review.

3.5 EXPANSION DEVICES

A. Expansion anchors: Similar to Hilti "Drop-In Anchor HDI" flush type.

B. Drill concrete to receive required expansion cases on concrete fasteners.

C. Install in shear only, not in tension.

3.6 EQUIPMENT BASES AND SUPPORTS

A. Provide rigid anchors for pipes immediately after vibration connections to equipment.

B. Refer to Specification Section 220500 for additional information.

C. Fabricate structural-steel stands to suspend equipment from structure above or to support equipment above floor.

D. Grouting: Place grout under supports for equipment and make smooth bearing surface.

3.7 METAL FABRICATION

A. Cut, drill, and fit miscellaneous metal fabrications for heavy-duty steel trapezes and equipment supports.

B. Fit exposed connections together to form hairline joints. Field-weld connections that cannot be shop-welded because of shipping size limitations.

C. Field Welding: Comply with AWS D1.1 procedures for shielded metal arc welding appearance and quality of welds, and methods used in correcting welding work, and with the following:

1. Use materials and methods that minimize distortion and develop strength and corrosion resistance of base-metals.

2. Obtain fusion without undercut or overlap.

3. Remove welding flux immediately.

4. Finish welds at exposed connections so no roughness shows after finishing and contours of welded surfaces match adjacent contours.

3.8 ADJUSTING

A. Hanger Adjustment: Adjust hangers to distribute loads equally on attachments and to achieve indicated slope of pipe.

3.9 PAINTING

A. Touchup: Clean field welds and abraded areas of shop paint. Paint exposed areas immediately after erecting hangers and supports. Use same materials as used for shop painting. Comply with SSPC-PA 1 requirements for touching up field-painted surfaces.

1. Apply paint by brush or spray to provide a minimum dry film thickness of 2.0 mils.

B. Galvanized Surfaces: Clean welds, bolted connections, and abraded areas and apply galvanizing-repair paint to comply with ASTM A 780.

END OF SECTION 220529

SECTION 220548 – PLUMBING VIBRATION CONTROLS AND SEISMIC RESTRAINTS

PART 1 – GENERAL

1.1 RELATED DOCUMENTS

A. Drawings and general provisions of the Contract, including General and Supplementary Conditions, Section 220500 and other Division 1 Specification Sections, apply to this Section.

1.2 WORK INCLUDED

A. Furnish and install all necessary vibration isolation materials to eliminate excessive noise and vibration from all building mechanical systems.

B. Seismic restraints for all systems shall be installed in accordance with:

1.	Code	IBC 2003
2.	Use group	See Structural Specifications
3.	Seismic design category	See Structural Specifications
4.	Site classification	See Structural Specifications
5.	Building I_p (Importance Factor)	See Structural Specifications
6.	All Life safety systems	Importance Factor = 1.5
7.	Emergency electrical	Importance Factor = 1.5
8.	Hazardous systems	Importance Factor = 1.5
	a. Natural Gas piping	Importance Factor = 1.5
	b. Natural Gas Vents	Importance Factor = 1.5
9.	Plumbing systems	
	a. Laboratory gases	Importance Factor = 1.5
	b. Compressed air system	Importance Factor = 1.5
	c. High Purity water system	Importance Factor = 1.5
	d. Pneumatic gases	Importance Factor = 1.5
	e. Domestic water system	Importance Factor = 1.5
	f. Non Potable water system	Importance Factor = 1.0
	g. Waste and vent system	Importance Factor = 1.0
	h. Laboratory waste and vent	Importance Factor = 1.5
	i. Storm Drain system	Importance Factor = 1.0
10.	Other systems	
	a. All other electrical systems	Importance Factor = 1.5
	b. All other plumbing systems	Importance Factor = 1.5
	c. Control conduits	Importance Factor = 1.5

C. Piping types

1. High deformability piping:

    a. Welded steel
    b. Welded stainless steel
    c. Socket welded steel
    d. Grooved steel that is ASME B31.1
    e. Brazed copper
    f. Grooved copper

2. Limited-deformability

    a. Threaded Steel
    b. Grooved steel that is not ASME B31.1
    c. Soldered copper

3. Low-deformability

    a. PVC
    b. Cast iron
    c. Glass
    d. Non-ductile plastic

D. All trapeze supported Items weighing 10 Lbs per foot or greater shall be braced. This weight shall include all pipes and conduits filled with water.

E. Secure all permits and local/state approval for the installation of all components included under this Section.

F. The work in this Section shall include the following:

1. Vibration isolation elements for equipment.
2. Equipment isolation bases.
3. Piping flexible connectors.
4. Seismic restraints for isolated equipment.
5. Seismic restraints for non-isolated equipment.
6. Seismic restraints for piping
7. Certification of seismic restraint designs and installation supervision.
8. Certification of seismic attachment of housekeeping pads.

G. Coordinate closely with Hangers and Supports, Pipe Expansion and Structural documents.

1.3 RELATED SECTIONS

A. Examine all drawings and criteria sheets and all other Sections of the Specifications for requirements which affect work under this Section whether or not such work is specifically mentioned in this Section.

B. Refer to Section 221120 – Plumbing Distribution.

C. Refer to Section 221140 – Plumbing Specialties.

D. Refer to Section 223000 – Plumbing Equipment.

E. Refer to Section 226000 – Laboratory Plumbing Systems.

1.4 REFERENCES

A. Applicable provisions of the following Codes and Trade Standard Publications shall apply to the work of this Section, and are hereby incorporated into, and made a part of the Contract Documents.

B. Material standards shall be as specified or detailed hereinafter and as follows:

1. NEBB– Procedural Standards for Measuring Sound and Vibration; National Environmental Balancing Bureau.
2. NEBB– Sound and Vibration in Environmental Systems; National Environmental Balancing Bureau.
3. SMACNA – Guidelines for Seismic Restraint of Mechanical Systems.
4. ASHRAE Guidelines – HVAC Applications; Chapter– Sound and Vibration Control, Chapter – Seismic Restraint Design, Latest Edition.
5. ASCE Standard 7 Minimum Design Loads for Buildings and Other Structures

1.5 SUBMITTALS

A. See Section 220500 and General Conditions for additional requirements.

B. The Vibration Isolation Submittal shall include descriptive data for all products and materials including the following:

1. Product Descriptions

a. A complete description of products to be supplied, including product data, dimensions, specifications and installation instructions.

b. An itemized list of isolated and non-isolated equipment. Detailed schedule and selection data for each vibration isolator and seismic restraint supporting equipment, including:

1) Equipment identification mark
2) Isolator type
3) Actual load
4) Static deflection expected under actual load
5) Specified minimum static deflection
6) Additional deflection-to-solid under load
7) Ratio of spring height under load to spring diameter
8) Base type
9) Seismic restraint type

c. Steel rails, steel base frames, and concrete inertia bases showing all steel work, reinforcing, vibration isolator mounting attachment method, and location of equipment attachment bolts.

2. Show equipment base construction for all equipment, including dimensions, structural member sizes and support point locations.

3. Indicate isolation devices selected with complete dimensional and deflection data.

4. Show all methods of suspension and support for ceiling hung equipment.

5. Detail methods of isolation for pipes piercing walls and slabs.

6. Provide specific details of seismic restraints and anchors, including number, size and locations for each piece of equipment.

7. Provide special details necessary to convey complete understanding of the work to be performed.

C. Seismic Analysis and Certification submittals shall include the following:

1. Seismic restraint calculations must be provided for all connections of equipment to the structure.

2. Calculations to support seismic restraint designs shall be stamped by a registered Professional Engineer.

3. Analysis must indicate calculated dead loads, derived loads, and materials utilized for connections to equipment and structure. Analysis must detail anchoring methods, bolt diameter, embedment and weld length.

4. A seismic design liability insurance certificate must accompany all submittals.

5. Coordinate all hangers and supports.

6. Provide Approved Agencies Certificate of Compliance meeting Seismic Category D for all components. Tests shall include anchorage, structural and on line capability from analytical or shaker test method.

a. Where the requirements of this specification cannot be met by any vendor, the contractor will submit a written summary indicating the lack of resources.

D. Submission of samples may be requested for each type of vibration isolation and seismic device. After approval, samples will be returned for installation at the job if requested. All costs associated with submission of samples shall be borne by the Contractor.

E. Provide seismic certifications for all equipment including, but not limited to:

1. Booster pumps
2. Laboratory equipment
3. Water heaters
4. VFDs
5. Motor control centers
6. Pumps
7. Seismic joints

1.6 QUALITY ASSURANCE

A. All vibration isolators shall have calibration markings or some method to determine the actual deflection under the imposed load after installation and adjustment.

B. All isolators shall operate within the linear portion of their load versus deflection curves. Load versus deflection curves shall be furnished by the manufacturer and must be linear over a deflection range of at least 50% above the design deflection.

C. The theoretical vertical natural frequency for each support point, based upon load per isolator and isolator stiffness, shall not differ from the design objectives for the equipment as a whole by more than ±10%, and shall be non-resonant with equipment forcing frequencies or support structure natural frequencies.

D. All neoprene components shall have a shore hardness of 30 to 50 ±5%, after minimum aging of (20) days or equal oven aging.

E. Substitution of internally isolated and restrained equipment in lieu of the isolation and restraints specified in this Section is acceptable provided all conditions of this Section are met. The equipment manufacturer shall provide a letter of guarantee stating that the specified noise and vibration levels will be obtained and that the seismic restraints shall be in compliance with these specifications. All costs for converting to the specified external vibration isolation and/or restraints shall be borne by the equipment manufacturer/installing contractor should submissions or installations be found to be unacceptable pursuant to the intent of this specifications.

F. Should any rotating equipment cause excessive noise or vibration, the Contractor shall be responsible for rebalancing, realignment, or other remedial work required to reduce noise and vibration levels. Excessive is defined as exceeding the manufacturer's specifications for the unit in question.

G. Upon completion of the work, the Architect or Architect's representative shall inspect the installation and shall inform the Installing Contractor of any further work that must be completed. Make all adjustments as directed by the Architect that result from the final inspection. This work shall be done before vibration isolation systems are accepted.

H. Manufacturer Responsibility

1. Manufacturer of vibration and seismic control equipment shall have the following responsibilities:

a. Determine vibration isolation and seismic restraint sizes and locations.

b. Provide equipment vibration isolation and seismic restraints as scheduled or specified.

c. Guarantee specified isolation system deflections.

d. Provide installation instructions, drawings and field supervision to ensure proper installation and performance of systems.

e. Provide certification by a licensed engineer that all mounts and restraints meet the project requirements for seismic loading.

2. Substitution of internally isolated mechanical equipment in lieu of the specified isolation of this Section must be approved for individual equipment units and is acceptable only if above acceleration loads are certified in writing by the equipment manufacturer and stamped and sealed by a licensed Civil or Structural Engineer.

3. Licensed Engineers shall be licensed in the project state.

I. Contractor Responsibilities

1. The Contractor performing the work on equipment in the section shall have the following responsibilities.

a. Identify the components that are part of the Quality Assurance Plan.

1) All flammable, combustible and highly toxic piping and their associated mechanical systems.
2) All equipment using combustible or toxic energy sources.

b. Identify all Special inspection and Testing.

c. List control procedures within the contractor's organization including methods and frequency of reporting and their distribution.

d. List personnel and their qualifications exercising control over the seismic aspects of the project.

2. Purchased and/or fabricated equipment must be designed to safely accept external forces of 1.8 g load in any direction for all rigidly supported equipment, piping without failure and permanent displacement of the equipment. Resiliently supported equipment, piping and Life safety equipment such as fire pumps, smoke exhaust fans, emergency generators and other life safety designated equipment must be capable of accepting external forces of up to 3.6 g in any direction without permanent displacement or failure of the equipment.

1.7 REGULATORY REQUIREMENTS

A. Conform to ASME B31.9 code for installation of piping system and ASTM F708 for design and installation of pipe hangers.

B. Welding Materials and Procedures: Conform to ASME (BPV IX) and applicable state labor regulations.

C. Provide certificate of compliance from authority having jurisdiction, indicating approval of welders.

1.8 DELIVERY, STORAGE AND HANDLING

A. All vibration control and seismic restraint equipment shall be delivered in containers and shall be kept in a dry and protected area.

B. All exposed hangers, supports, etc. shall be given 2 coats of rust resistant paint of a color selected by the Architect prior to installation.

PART 2 – PRODUCTS

2.1 ISOLATORS AND RESTRAINTS – GENERAL

A. Acceptable Manufacturers subject to compliance to specifications.

1. Mason Industries (MI)
2. Amber/Booth (AB)
3. Kinetics Noise Control (KNC)
4. Vibration Eliminator Co. (VEC)
5. Vibration Mountings & Controls (VMC)

B. The Mechanical Contractor shall provide necessary vibration isolation materials to eliminate excessive noise and vibration from being transmitted from Plumbing equipment to the occupied areas of the structure, and to serve as the basis for seismic restraint design for the entire Plumbing system within the building. This includes all non-structural components such as, but not limited to, pumps, tanks, piping, etc. (hereinafter called equipment).

C. Seismic restraints and vibration isolation types shall be capable of accepting, without failure, seismic forces determined in accordance with:

1. International Building Code
2. State/Country Codes
3. Local codes enforced at the specified project location.

D. Isolators and supports shall maintain the equipment in a captive position and not short circuit isolation during normal operating conditions. Isolators shall have provisions for bolting and/or welding to the structure.

E. All metal parts of vibration isolation units installed out-of-doors shall be cold dip galvanized, cadmium plated, or neoprene or PVC coated after fabrication. Galvanizing shall meet ASTM Salt Spray Test Standards and Federal Test Standard #14.

F. All base supported isolators shall have base plates with bolt holes for fastening the isolators to the support members.

G. Isolator types are scheduled to establish minimum standards. At the Contractor's option, laborsaving accessories can be an integral part of isolators supplied to provide initial lift of equipment to operating height, hold piping at fixed elevations during installation and initial system filling operations, and similar installation advantages. Accessories must not degrade the vibration isolation system.

H. Static deflection of isolators shall be as scheduled in this Section and as shown on the drawings. All static deflections stated are the minimum acceptable deflection under actual load. Isolators shall be selected for no less than 50% reserve deflection beyond actual operating conditions.

I. Attachment plates to be cast into housekeeping pads, concrete inserts, beam clamps, etc. that may be required for seismic compliance shall be provided by this Section.

J. Coordinate the size, location and special requirements of vibration isolation equipment and systems with other Trades. Coordinate plan dimensions with size of housekeeping pads.

2.2 SEISMIC RESTRAINT TYPES

A. Type I

1. Type I shall comply with general characteristics of spring isolator Type A with snubbing restraint in all directions capable of supporting equipment at fixed elevations during installation. Cast or aluminum housings, except ductile iron are not acceptable.

2. Type I seismic restraint shall be similar to Mason Industries Type SLRS.

B. Type II

1. Each corner or side of equipment base shall incorporate a seismic restraint snubber having a minimum of 5/8" thick resilient pad limit stop. Seismic snubbers shall be in accordance with manufacturer's recommendations.

2. Type II seismic restraints shall be similar to Mason Industries Type Z-1011 or Z-1225.

C. Type III

1. Type III shall be multiple metal cable or strut type with approved fastening devices to equipment and structure. System to be field bolted to deck or to overhead structural members using 2-sided beam clamps or appropriately designed inserts for concrete. All parts of the system including cables, excluding fasteners, are to be of a single supplier to ensure seismic compliance.

D. Type IV

1. Type IV shall have double deflection neoprene isolator (minimum 0.3") encased in ductile iron or steel casing.

2. Type IV seismic restraints shall be similar to Mason Industries Type BR, RBA or RCA.

E. Type V

1. Non-isolated equipment shall be field bolted or welded (powder shots not acceptable) to the structure as required to meet seismic forces. Bolt diameter, imbedment data and/or weld length must be shown in certified calculations.

2.3 VIBRATION ISOLATOR TYPES

A. Type A (Floor Spring and Neoprene)

1. The Type A spring isolator shall:

a. Have a minimum outside diameter to overall height of 0.8:1.

b. Have corrosion resistance where exposed to corrosive environment with:

1) Springs cadmium plated or electro-galvanized.
2) Hardware cadmium plated.
3) All other metal parts hot dip galvanized.

c. Have reserve deflection (from loaded to solid height) of 50% of rated deflection.

d. Have minimum 1/4" thick neoprene acoustical base pad on underside, unless designed otherwise.

e. Be designed and installed so that ends of springs remain parallel.

2. Type A isolator shall be similar to Mason Industries Type SLF.

Note: Must be used with Seismic Restraint II.

B. Type B (Floor Spring and Neoprene Travel Limited)

1. The Type B spring isolator shall be the same as Type A with the following additional features.

a. Built-in vertical limit stops with minimum 1/4" clearance under normal operation.

b. Tapped holes in top plate for bolting to equipment.

c. Capable of supporting equipment at fixed elevation during equipment installation. Installed and operating heights shall be identical.

d. Adjustable and removable spring pack with separate neoprene isolation pad.

2. Type B isolator shall be similar to Mason Industries Type SLR.

Note: This isolator must be bolted or welded to the structure.

C. Type C (Spring Hanger Rod Isolator)

1. Spring isolator (Type A) seated on a steel washer within a neoprene cup incorporating a rod isolation bushing.

2. Spring diameters and hanger box shall allow 30° of hanger rod movement.

3. Type C isolator shall be similar to Mason Industries Type 30 or W30.

Note: Must be used with Seismic Restraint III.

D. Type D

1. Same as Seismic Restraint Type IV.

E. Type E (Elastomer Hanger Rod Isolator)

1. Molded (minimum 1 3/4" thick) neoprene element with projecting bushing lining the rod clearance hole. Static deflection at rated load shall be minimum 0.035".

2. Steel retainer box encasing neoprene mounting capable of supporting equipment up to (4) times the rated capacity of the element.

3. Type E isolator shall be similar to Mason Industries Type HD.

Note: Must be used with Seismic Restraint III.

F. Type F (Combination Spring/Elastomer Hanger Rod Isolator)

1. Spring and neoprene elements in a steel retainer box with the features as described for Type C and Type E isolators.

2. Type F isolator shall be similar to Mason Industries Type 30N.

Note: Must be used with Seismic Restraint III.

G. Type G (Pad Type Elastomer Isolator)

1. 0.75" minimum thickness, 50 psi maximum loading, ribbed or waffled design.

2. Minimum 0.1" deflection.

3. 1/16" galvanized steel plate between multiple pad layers.

4. Provide load distribution plate where attachment to equipment bearing surface is less than 75% of the pad area.

5. Type G isolators shall be similar to Mason Industries Type Super W.

   Note: Bolting required for seismic compliance. Neoprene and duck washers and bushings shall be provided to prevent short circuiting.

H. Type H (Pad Type Elastomer Isolator)

1. Laminated cotton duck and neoprene, maximum loading 1000 psi, minimum 1/2" thick.

2. Provide load distribution plate where attachment to equipment bearing surface is less than 75% of the pad area.

3. Type H isolator shall be similar to Mason Industries Type HL.

   Note: Bolting required for seismic compliance. Neoprene and duck washers and bushings shall be provided to prevent short circuiting.

I. Type I (Thrust Restraints)

1. A spring element similar to Type A isolator shall be combined with steel angles, back-up plates, threaded rod, washers and nuts to produce a pair of devices capable of limiting movement of air handling equipment to 1/4".

2. Restraint shall be easily converted in the field from a compression type to tension type.

3. Unit shall be factory pre-compressed.

4. Thrust restraints shall be installed on all cabinet fan heads, axial or centrifugal fans and other equipment as scheduled.

5. Type I restraint shall be similar to Mason Industries Type WB.

J. Type J (Steel Rails)

1. Steel members of sufficient strength to prevent equipment flexure during operation.

2. Height saving brackets as required to reduce operating height.

3. Type J isolator shall be similar to Mason Industries Type ICS.

K. Type K (Pipe Anchors and Guides)

1. Acoustical pipe anchor or guide, consisting of a telescopic arrangement of (2) sizes of steel tubing separated by a minimum 1/2" thickness of Type H pad.

2. Vertical restraints shall be provided by a similar material arranged to prevent vertical travel in either direction (anchors only).

3. Allowable loads on isolation materials shall not exceed 500 psi, and the design shall be balanced for equal resistance in any direction.

4. Anchors and guides must be bolted or welded to meet seismic criteria.

5. Type K anchor shall be similar to Mason Industries Type ADA.

L. Type L (Isolated Clevis Hanger)

1. Combination clevis or rod roller hanger and a Type C, E, or F, isolation hanger.

2. System shall be pre-compressed to allow for rod insertion and standard leveling.

3. Type L hanger shall include Mason Industries Type CCB clevis brace.

2.4 EQUIPMENT BASES

A. All curbs and roof rails are to be bolted or welded to the building steel or concrete deck to attain acceleration criteria and shall be wind restrained for 110 mph wind loads.

B. Type B-1 (Integral Structural Steel Base)

1. The integral structural steel base shall be reinforced as required to prevent base flexure at equipment start-up and misalignment of driver and driven units.

2. Height saving brackets shall be provided, as required, to reduce operating height and maintain 1" operating clearance under base.

3. Member depth shall be a minimum of 1/10 of the longest unsupported span.

4. Type B-1 equipment base shall be similar to Mason Industries Type M or WF.

Note: Must be used with Restraint I, II or IV.

C. Type B-2 (Concrete Inertia Base)

1. Concrete inertia base shall have rectangular structural concrete forms for floating foundations. The base depth shall be a minimum of 1/12 the longest span, but not less than 6" or greater than 14". Forms shall include concrete reinforcement consisting of 1/2" bars or angles welded in place on 6" centers both ways in a layer 1 1/2" above the bottom. Provide an additional top layer of reinforcing for all bases exceeding 10'-0" in one direction.

2. Isolators shall be set into pocket housings which are an integral part of the base construction and set at the proper height to maintain 1" clearance below the base. Base shall be furnished with templates for equipment attachment and anchor bolt sleeves.

3. Type B-2 equipment base shall be similar to Mason Industries Type K or KIPWF.

Note: Must be used with Restraint I, II or IV.

2.5 FLEXIBLE PIPE CONNECTOR

A. All flexible connectors shall be:

1. Installed on the equipment side of the shutoff valves, horizontal and parallel to equipment shafts whenever possible. All piping between the flexible connector and the equipment shall be independently supported off the equipment base.

2. Provided wherever rigidity supported piping is connected to equipment.

B. Type FC-1 (Elastomer Connector)

1. Manufactured of nylon tire cord and EPDM, both molded and cured in hydraulic presses. Neoprene used in lieu of EPDM is not acceptable.

2. Straight connectors to have (2) spheres reinforced with a molded in external ductile iron ring between the spheres.

3. Rated at 250 psig/170°F, dropping in a straight line to 170 psig/250°F for sizes 1 1/2" to 12".

4. All sizes shall employ control cables with neoprene end fittings isolated from anchor plates by means of 1/2" bridge bearing neoprene bushings.

5. Connectors shall be installed pre-extended per manufacturer's recommendations to prevent elongation under pressure.

6. Minimum safety factory of 3.6:1 at maximum pressure ratings shall be certified by test reports. Submittals shall also include (2) test reports by independent consultants showing minimum reduction of 20 dB in vibration accelerations and 10 dB in sound pressure levels at typical blade passage frequencies.

7. Connectors bolted to Victaulic type coupling or gage, butterfly or check valves to have a minimum 5/8" flange spacer installed between the connector and the coupling flange.

8. Connectors for pipe size 2" and smaller shall have threaded female union couplings on each end. Larger pipe sizes shall be fitted with flange couplings.

9. Type FC-1 flexible connector shall be similar to Mason Industries Super-Flex Type MFTNC or MFTFU.

C. Type FC-2 (Flexible Stainless Steel Hose)

1. Stainless steel hose and braid rated with 3:1 safety factor.

2. 2" and smaller with male nipples, 2 1/2" and larger with fixed steel flanges.

3. Lengths as follows:

Size		Length	Size		Length	Size		Length
1/2	x	9	2	x	14	8	x	22
3/4	x	10	2 1/2	x	13	10	x	26
1	x	11	3	x	14	12	x	28
1 1/4	x	12	4	x	15	14	x	30
1 1/2	x	13	5	x	19	16	x	32
			6	x	20			

4. Type FC-2 flexible connector shall be similar to Mason Industries Type BSS.

5. 250 PSIG working pressure.

D. Type FC-3 (Unbraided Exhaust Hose)

1. Low pressure stainless steel annularly corrugated with flanged ends.

2. Maximum temperature of 1500°F.

3. Lengths (in inches) as follows:

Size		Length	Size		Length
2 1/2	x	15	8	x	22
3	x	16	10	x	26
4	x	17	12	x	28
5	x	18	14	x	30
6	x	19	16	x	32

4. Type FC-3 flexible connector shall be Mason Industries Type SDL-RF or equal by approved manufacturer.

E. Type FC-4 (Bronze Braided Flexible Hose)

1. Bronze hose and braid rated with a minimum 3:1 safety factor (minimum 150 psi).

2. Copper tube ends.

3. Minimum lengths (in inches) as follows:

Size		Length	Size		Length	Size		Length
1/8	x	7 1/2	3/4	x	11 1/2	3	x	27
1/4	x	8 1/4	1	x	13	3 1/2	x	32
3/8	x	9	1 1/4	x	14 3/4	4	x	33
1/2	x	9 3/4	1 1/2	x	17	5	x	41
5/8	x	10	2	x	20	6	x	48
			2 1/2	x	24			

4. Type FC-4 flexible connector shall be similar to Mason Industries Type BFF.

5. 250 PSIG working pressure.

F. Seismic Expansion Joints

1. Provide seismic expansion joints on all piping, conduits or other systems crossing building expansion seismic joints. Provide these joints to allow for the movement in the XY&Z direction as indicated on the structural documents.

2. Pressure rated for 250 PSIG at maximum service temperature.

2.6 VIBRATION ISOLATION SCHEDULE

Equipment	HP	Mtng	On Grade ****				Above Grade			
			Isol	Defl	Base	Restr	Isol	Defl	Base	Restr
Base Mounted Pumps	to 15	Flr	A	1.0	B-2	II	A	1.5	B-2	I,II
	>15	Flr	A	1.5	B-2	II	A	2.0	B-2	I,II
In Line Pump		Clg	---	---	---	---	F	.30	---	III
Air Compressor		Flr	A	1.0	B-2	II	A **	See	B-2	I,II
Vacuum Pumps							F	Guide	---	III

* Used on vertically arranged units. Rails shall be 1.5 times the unit height.
** Substitute Type B isolator for Outdoor installations.
*** Substitute Type B-2 base for floor mounted Class 2 and 3 fans.
**** "On Grade" shall mean slab on grade only.
***** Fans in all units shall be isolated in accordance with chart.

Notes:

1. "Isol", "Base" and "Restr" columns indicate letter type as appears in the specs.
2. "Mtng" refers to method of support of equipment from the structure.
3. "See Guide" indicates isolator deflection selection to be taken from Deflection Guide below.

Deflection Guide	
RPM	MW Deflection
<400	3.5"
<600	2.5"
>600	1.5"

PART 3 – EXECUTION

3.1 GENERAL

A. Isolation and seismic restraint systems must be installed in strict accordance with the manufacturer's written instructions and submittal data. Vibration isolators shall not cause any change of position of equipment resulting in stress on equipment connections.

B. Design Criteria

1. All mechanical equipment such as pumps, compressors, heaters, etc. shall be isolated from the building structure by means of noise and vibration isolators.

2. All piping in mechanical equipment rooms and penthouses shall be isolated from the building structure by means of noise and vibration isolation hangers and provided with seismic restraints.

3. Piping penetrations through floors and walls shall not be rigidly connected to the building structure. Provide sleeves with clearances around the outside, as recommended by the vibration materials manufacturer. All such penetrations shall be smokeproofed and firestopped in an approved manner as hereinbefore specified.

4. Generally, isolation facilities shall be designed to limit equipment room floor or roof loading to a maximum of 50 lbs./sq.ft. and vibration isolators shall be carefully and specifically selected for each piece of equipment.

5. Piping found to have water hammer or other objectionable vibration or noise which cannot be eliminated by proper grading or other natural means shall be braced, trapped, hung with vibration isolation hangers, equipped with air chambers or mechanical shock absorbers, flexible pipe connectors, or otherwise silenced using means as approved by the Architect.

6. Motor driven equipment which is to be isolated shall have motor mounted on the isolated equipment or shall have motor, equipment and drive mounted on a common base.

7. The Contractor shall not install any equipment, piping or conduit which makes rigid contact with the "building" unless permitted in this Specification. Building includes, but is not limited to, slabs, beams, columns, studs and walls.

8. Isolation mounting deflection shall be (minimum) as specified or scheduled on drawings.

9. Coordinate work with other trades to avoid rigid contact with the building. Inform other trades following work, such as plastering or electrical, to avoid any contact which would reduce the vibration isolation.

10. Bring to the Architect's attention, prior to installation, any conflicts with other trades that will result in unavoidable rigid contact with equipment or piping as described herein, due to inadequate space or other unforeseen conditions. Corrective work necessitated by conflicts after installation shall be at the responsible contractor's expense.

11. Bring to the Architect's attention any discrepancies between the specifications and field conditions or changes required due to specific equipment selection, prior to installation. Corrective work necessitated by discrepancies after installation shall be at the contractor's expense.

12. Obtain inspection and approval of any installation to be covered or enclosed, prior to such closure.

13. Correct, at no additional cost, all installations which are deemed defective in workmanship or materials.

3.2 SPRING RISER SUPPORT SYSTEM

A. All vertical riser subjected to thermal expansion and/or construction as noted herein or on the documents, shall be supported by spring isolators and central anchors designed to insure loading within design limits at structural support points. The riser design must include the initial load, initial deflection, change in deflection, final load and change in load at all spring support locations. In order to minimize load changes, the initial spring deflection must be at least 4 times the thermal movement. The submittal must also include anchor loads when installed, cold filled, and at operating temperature. Include calculated pipe stress at end conditions and branch off locations as well as installation instruction. The submittals must be stamped and signed by a licensed Professional Engineer in the employ of the vibration vendor for at least five years.

B. Neutral resilient anchors close to the center of the run shall direct movement up and down. The anchors shall be capable of holding an upward force equal to the water weight when the system is drained. If one level cannot accommodate this force, anchors can be located on 2 or 3 adjacent floors. Resilient guides shall be spaced and sized properly depending on the pipe diameter.

C. Proper provision shall be made for seismic protection in seismic zones, as required.

D. The support spring mounts shall be specification Type A, anchors Type ADA, telescoping guides Type VSG, all similar to as manufactured by Mason Industries, Inc.

E. The isolation vendor shall provide and design all brackets at riser spring and anchor locations where standard clamps lack capacity or do not fit. The contractor must install and adjust all isolators under the supervision of the designing isolation vendor or his representative.

3.3 EQUIPMENT ISOLATION INSTALLATION

A. Equipment shall be isolated and restrained as per the vibration isolation schedule at the end of this Section.

B. Place floor mounted equipment on 4" high concrete housekeeping pads (unless detailed otherwise) properly doweled or expansion shielded to the deck to meet acceleration criteria. Anchor isolators and/or bases to housekeeping pads. Housekeeping pad concrete work shall be by Division 3. Housekeeping pads shall be sized to have a minimum of 6” of clearance all around the equipment or 12 bolt diameters, whichever is greater.

C. Additional Requirements

1. The minimum operating clearance under inertia bases shall be 2".

2. The minimum operating clearance under other bases shall be 1".

3. All bases shall be placed in position and supported temporarily by blocks or shims, as appropriate, prior to the installation of the equipment, isolators and restraints.

4. The isolators shall be installed without raising the equipment.

5. After the entire installation is complete, and under full operational load, the isolators shall be adjusted so that the load is transferred from the blocks to the isolators. The blocks shall be barely free and shall be removed. Remove all debris from beneath the equipment and verify that there are not short circuits of the isolation. The equipment shall be free in all directions.

6. Install equipment with flexibility in wiring.

3.4 PIPING ISOLATION INSTALLATION

A. Isolate piping outside shafts connected to rotating or reciprocating equipment and pressure reducing stations as follows:

1. All water piping in mechanical rooms.

2. Piping within 50'-0" or 100 pipe diameters (whichever is greater) from connected isolated equipment.

B. The isolators shall be installed with the hanger box hung as closely as possible (without direct contact) to the structure.

C. The isolators shall be suspended from substantial structural members sized for a maximum deflection of L/360 at mid span, not from slab diaphragm, unless specifically permitted by the structural engineer.

D. Hanger rods shall not short circuit the hanger box.

E. Horizontal suspended water piping 1 1/4" to 2" shall be suspended by Type E isolators with a minimum 3/8" deflection. Water pipe larger than 2" shall be supported by Type F isolators with a minimum 0.75" deflection or same deflection as equipment for the first (3) locations nearest equipment, whichever is greater.

1. Type L isolators may be substituted for the above.

2. Horizontal floor and roof supported pipe shall be the same as above except use isolators Type D and Type A, respectively.

F. Vertical riser pipe supports, where required, under 2" diameter shall utilize Type H isolation.

G. Vertical riser guides, where required, shall avoid direct contact of piping with the building.

H. Pipe anchors or guides, where required, shall utilize Type K isolators.

I. Riser sway supports, where required, shall utilize (2) neoprene elements (Type G or H) to accommodate tension and compression forces.

J. Install Type FC-1 (FC-4 for refrigerant piping) flexible connectors at all connections of pipe to isolated equipment such as pumps, as shown on the drawings.

K. Install FC-2, FC-3 or FC-4 type connectors only at locations which exceed temperature or service (such as gas, fuel oil, or refrigerant) limitations of FC-1.

3.5 SEISMIC RESTRAINTS INSTALLATION

A. All floor mounted equipment, whether isolated or not, shall be bolted or welded to the structure to allow for required acceleration. Bolt points, diameter of inserts, imbedment depth and weld length as shown on approved submittal drawings shall be followed in all respects.

B. All suspended equipment shall be 2-point or 4-point independently braced with Type III restraints, installed taut for non-isolated equipment, such as piping and slack with 1/2" cable deflection for isolated equipment. Note: Stiffeners for support rods may be required, certifications shall clearly delineate when such stiffening is required or not.

1. Piping Bracing: Schedule 10 thru 40 welded, screwed, flanged or grooved; 40'-0" maximum transversely, 80'-0" maximum longitudinally, and within 4'-0" each change of direction. No- hub piping shall be at 10’-0” intervals or 40’-0” if 1.0 g couplings are used.

C. Seismic restraints are not required:

1. Only when explicitly permitted by the code. These permitted exceptions shall be detailed clearly on the first page of the seismic submittal.

D. Seismic restraints are not required on the following (there are no exceptions for piping containing flammable or hazardous material or connected to life/safety equipment):

1. Piping in mechanical equipment rooms less than 1 1/4".

2. Other piping less than 2 1/2".

3. All pipe suspended by individual hangers 12" in length or less from the top of the pipe support to the bottom of the support for the hanger.

E. Where base anchoring of equipment is insufficient to resist seismic forces, restraints such as Type III shall be located above the unit's center of gravity to resist "G" forces.

Note: Vertically mounted tanks and upblast tubular centrifugal fans may require this additional restraint.

F. For overhead supported equipment, overstress of the building structure must not occur. Bracing may occur from:

1. Upper flanges of structural beams.
2. Upper truss chords in bar joists.
3. Cast-in-place inserts or drilled and shielded inserts in concrete structures.

G. Inspection

1. On completion of installation of all vibration isolation and seismic restraint devices herein specified, the local representative of the isolation materials manufacturer shall inspect the completed system and report in writing any installation errors, improperly selected isolation or restraint devices, or other faults that could affect the performance of the system. Contractor shall submit a report to the Architect, including the manufacturer's representative's final report, indicating all isolation reported as properly installed or requiring correction, and include a report by the Contractor on steps taken to properly complete the isolation work.

2. Provide all special inspections in accordance with IBC and as specified herein.

a. Continuous inspection: The full-time observation of work by an approved special inspector pursuant to IBC. The following pieces of equipment require these inspections:

1) All equipment using combustible or toxic energy sources.
2) All electric motors and motor control centers.
3) Reciprocating and rotating type machinery.
4) Pipe.
5) Tanks, heat exchangers & pressure vessels.

b. Periodic inspection: Provide intermittent observation of work by an approved special inspector of the following pieces of equipment in compliance with IBC.

1) All smoke control systems during construction & prior to concealment for leakage testing.
2) Isolator units for seismic isolation system.
3) All flammable, combustible and highly toxic piping and their associated mechanical systems.

c. After all inspections a written report shall be provided.

3.6 INSTALLATION INSTRUCTIONS

A. Adjust all base and piping isolators as required to prevent stress transfer to equipment.

B. Set steel bases for 1" clearance between housekeeping pad and base. Set concrete inertia bases for 2" clearance. Adjust equipment level.

C. Position equipment, structural base and concrete base on blocks or wedges at proper operating height.

D. Provide all equipment and provide operating load conditions before transferring base isolation loads to springs and removing wedges.

E. Install inertia bases of type and thickness, with isolators of type and static deflection indicated.

F. Provide isolators as specified and install in accordance with the manufacturers recommendations. Seismic restraints shall not be installed until isolators are adjusted and equipment height is finalized.

G. Provide forms for 4" high housekeeping pads under all floor mounted equipment, including those with inertia blocks. Provide necessary reinforcing.

H. Install equipment with flexibility in wiring connection.

I. Verify all installed isolators and mounting system permit equipment motion in all directions.

J. Adjust or provide additional resilient restraints to flexibly limit lateral motion to 1/4" during start-up of equipment.

K. Before start-up, clean out all foreign matter between bases and equipment to prevent short circuit.

L. Install flexible pipe connectors on pipe connected to equipment supported by vibration isolation. Hook up piping to equipment and mains with spool pieces. After completion of pressure testing but prior to start-up, remove spool pieces and install flexible pipe connectors. Identify spool pieces as to equipment served and either entering or leaving.

M. Provide seismic displacement joints for all piping and conduits crossing building expansion joints or building seismic joints.

3.7 CERTIFICATION

A. Upon completion of installation of all vibration isolation devices and seismic restraints, the Mechanical Contractor shall hire an independent Seismic Professional Engineer to visit the site, inspect the completed project and certify in writing to the Architect that all systems are installed properly, or require correction.

END OF SECTION 220548

SECTION 220553 – PLUMBING IDENTIFICATION

PART 1 – GENERAL

1.1 RELATED DOCUMENTS

A. Drawings and general provisions of the Contract, including General and Supplementary Conditions, Section 220500 and other Division 1 Specification Sections, apply to this Section.

1.2 WORK INCLUDED

A. Furnish and install nameplates, valve tags, valve charts, stencils and pipe markers on all Plumbing equipment and piping.

B. Provide nameplates with the unit number and service designation on all Plumbing equipment.

C. Indicate all valve tag numbers on Record Drawings and submit framed under glass valve tag charts including valve service and location.

D. Install color coded ceiling tacks in acoustical tile ceilings or color coded tape on ceiling grid to identify location of equipment and valves that require regular maintenance.

E. Provide underground plastic pipe markers 6 to 8 inches below finish grade, directly above buried pipes.

F. Provide manufactured pipe identification stencils with flow arrows and service indicated. All backgrounds of the stencils shall be color coded with specific service designation

G. Prepare valve charts and frame under plexiglass. All valves and the tag numbers shall be shown on the Record As-Built Drawings.

H. Provide valve computer data base to match chart.

I. Provide at each emergency station and non-potable water fixture code required signage.

J. Provide color coding and labeling as required by IPC and local regulations on all reclaimed and non-potable water piping.

1.3 RELATED SECTIONS

A. Examine all drawings and criteria sheets and all other Sections of the Specifications for requirements which affect work under this Section whether or not such work is specifically mentioned in this Section.

1. Section 220500 – Basic Plumbing Materials and Methods

2. Section 220510 – Underground Plumbing
3. Section 220529 – Hangers and Supports
4. Section 220548 – Plumbing vibration Controls & Seismic Restraints
5. Section 220584 – Through Penetration Firestop Systems
6. Section 221110 – Plumbing Valves
7. Section 221120 – Plumbing Distribution
8. Section 221130 – Drainage and Vent Piping
9. Section 221140 – Plumbing Specialties
10. Section 223000 – Plumbing Equipment
11. Section 224000 – Plumbing Fixtures
12. Section 226000 – Laboratory Plumbing Systems

1.4 REFERENCES

A. Applicable provisions of the following Codes and Trade Standard Publications shall apply to the work of this Section, and are hereby incorporated into, and made a part of the Contract Documents.

B. Material standards shall be as specified or detailed hereinafter and as follows:

1. ASME A 13.1 – Scheme for Identification of Piping Systems; The American Society of Mechanical Engineers.

1.5 SUBMITTALS

A. See Section 220500 and General Conditions for additional requirements.

B. Product Data: Submit product description including materials, attachment methods, color coding and lettering sizes.

1.6 QUALITY ASSURANCE

A. All materials, lettering and individual system color coding schemes shall be uniform and of one single manufacturer.

B. No identification shall be installed until all systems are complete and insulated.

C. All surfaces shall be cleaned.

D. No nametag or identification shall break or penetrate a surface used as a vapor barrier.

1.7 REGULATORY REQUIREMENTS

A. Conform to all local/state and NFPA requirements for color-coding or painting of systems, piping or equipment related to Life Safety or Fire Protection.

1.8 DELIVERY, STORAGE AND HANDLING

A. All identification systems shall be stored in sealed containers in suitable locations to keep the containers and contents dry and clean.

1.9 ENVIRONMENTAL REQUIREMENTS

A. All surfaces shall be cleaned and dry before applying any form of identification or tagging.

B. Consult with the manufacturer prior to installation for the proper tagging and identification procedure and materials to be used on exterior outdoor equipment.

1.10 EQUIPMENT LABELING

A. Testing Agency Labeling Requirement

1. All equipment and materials required for installation under these specifications shall be new and without blemish or defect.

2. Equipment and materials shall be products which will meet with the acceptance of the Authorities having Jurisdiction over the work and as specified hereinbefore.

3. Where such acceptance is contingent upon having the FM Global label. Factory manufactured and assembled packaged equipment, such as the examples of equipment listed below, shall have the entire assembled package inspected and labeled by Factory Mutual.

4. All equipment shall meet OSHA standards.

5. All products shall be listed and labeled by UL or other national testing laboratories such as ETL and the products shall be so labeled.

a. Label of Underwriter's Laboratories, ETL or other Nationally-recognized testing. Provide organization.

b. This labeling shall include not just the control panel and/or motor, but all wiring and devices included in the package as a complete package. Note: providing a series of individually labeled electrical devices that are then assembled into a package does not meet this requirement, the whole assembly must be labeled as an assembly. The manufacturers have the option of having the equipment inspected and labeled at the factory or at the site after installation.

6. Labeled Equipment

a. Some examples of packaged equipment requiring labeling are as follows:

1) Sump pumps sets
2) Ejector pump sets

3) Air compressor system
4) Laboratory air compressor
5) Vacuum pump sets
6) Water pressure booster systems
7) RODI water system skids

PART 2 – PRODUCTS

2.1 GENERAL

A. Acceptable manufactures contingent on compliance with the specification.

1. Seton
2. W. H. Bradey Company
3. Marning Services Incorporated

2.2 PIPE IDENTIFICATION AND VALVE TAGS

A. All piping, except that piping which is within inaccessible chases, shall be identified with semi-rigid plastic identification markers equal to Seton Setmark pipe markers.

1. Direction of flow arrows is to be included on each marker.

2. Each marker background shall be appropriately color coded with a clearly printed legend to identify the contents of the pipe in conformance with the "Scheme for the Identification of Piping Systems" (ASME A13.1-1981).

3. Setmark snap-around markers shall be used for overall diameters up to 6" and strap-around markers shall be used above 6" overall diameters.

4. Markers shall be located:

a. Adjacent to each valve
b. At each branch
c. At each cap for future
d. At each riser takeoff,
e. At each pipe passage through wall (each side)
f. At each pipe passage at 20' – 0" intervals maximum.

5. Under ground pipe markers:

a. Provide detectable tape on all underground piping:
b. Labels shall be color coded and labeled the same as indoors.

B. Valve tags

1. All valves shall be designated by distinguishing numbers and letters carefully coordinated with a valve chart.

2. Valve tags shall be color coded 0.032” anodized aluminum tags, with engraved letters similar to Seton S Type 250-BL or approved equal.

   a. Plumbing tags shall be square 2” x 2” similar to Seton 42769.

   b. Lettering shall be ¼” high for type service and ½” for valve number. Tag shall indicate service and valve number.

   c. Each service shall be a different color.

3. Tag shall be attached to valves with chain similar to Seton No 16 stainless steel jack chain.

4. Whenever a valve is above a hung ceiling, the valve tag shall be located immediately above the hung ceiling.

C. Furnish a minimum of two (2) typed valve lists

1. Each framed under glass or Plexiglas. Each chart shall be enclosed in an approved 0.015” thick plastic closure for permanent protection.

2. Valve numbers shall correspond to those indicated on the Record Drawings and on the printed valve lists.

3. The printed list shall include the valve number, location and purpose of each valve.

4. It shall state other necessary information such as the required opening or closing of another valve when one valve is to be opened or closed.

5. Printed framed valve lists shall be displayed in each Mechanical Room or in a location designated by the Owner.

D. Valve data base.

1. Provide a valve data base for all valves to operate on the building computer.

2. Every valve shall include:

   a. Tag Number
   b. Service (cold water, etc.)
   c. Size
   d. Operation
   e. Location
   f. Manufacture
   g. Model number
   h. Submittal reference

2.3 EQUIPMENT NAMEPLATES

A. Equipment nameplates shall be 3” x 6” long, 0.02” aluminum with a black enamel background with engraved natural aluminum letters similar to Seton Style 2065-20. Nameplate shall have pressure sensitive taped backing.

B. The nameplate shall contain the unit or equipment designation (“AHU” for air handling unit, “HP” for heat pump, “P” for circulating pump, etc.), unit number and area or system served.

C. Nameplates for exterior equipment shall be applied with waterproof adhesive.

2.4 UTILITY ENTRANCE DESIGNATIONS

A. Provide a brass wall plaque, minimum 0.020” thickness, secured to the exterior wall just above the grade line for all buried service entrances or exits. Samples are: Water Service Below; Gas Service Below; Sanitary Sewer Below; Storm Sewer Below; Irrigation Water Below; etc.

2.5 CEILING TACKS OR TAPE

A. Provide steel color coded ¾ inch diameter ceiling tacks in acoustical tile ceilings or color coded tape applied to ceiling grid to locate equipment, valves or dampers that require regular maintenance or are part of a Life Safety System.

B. The tacks or tapes shall be color codes as follows (coordinate with Owner):

1. Yellow – HVAC
2. Red – Life Safety (fire dampers, sprinkler valves, etc.)
3. Green - Plumbing Valves.
4. Blue – Heating/Cooling Valves

2.6 EMERGENCY STATION AND NON-POTABLE WATER SIGNAGE

A. Provide in accordance with code, signage of contrasting color (either red and white or green and white) stating “Safety Shower” or “Emergency Eye Wash Station” or “Non-Potable Water – DO NOT DRINK” for the respective fixtures. Mount signage as directed by the Architect.

PART 3 – EXECUTION

3.1 PREPARATION

A. All surfaces shall be cleaned and insulated (if applicable) prior to installing any identification.

B. Exterior surfaces of outdoor equipment shall be dry and prepared to accept the specified identification.

3.2 INSTALLATION

A. Install nameplates with corrosive-resistant mechanical fasteners, or adhesive. Apply with sufficient adhesive to ensure permanent adhesion. Seal with clear lacquer.

B. Install valve tags with chain.

C. Install plastic pipe markers in accordance with manufacturer's Instructions.

D. Install plastic tape markers complete around pipe in accordance with manufacturer's instructions.

E. Install underground plastic pipe markers 6 to 8 inches below finished grade, directly above buried pipe.

F. Identify air handling units, pumps, boilers, domestic hot water heaters, fire pumps, heat transfer equipment tanks, water treatment devices, etc. with plastic nameplates. Small devices, such as in-line pumps, may be identified with tags.

G. Identify control panels and major control components outside panels with plastic nameplates.

H. Install detector tape on all under ground services in accordance with the manufactures recommendations.

I. Identify valves in main and branch piping with valve tags.

J. Identify piping, concealed or exposed, with pipe markers or where buried using plastic tape pipe markers. Use tags on piping ¾ inch diameter and smaller. Identify service, flow direction and pressure. Install in clear view and align with axis of piping. Locate identification not to exceed 20 feet on straight runs including risers and drops, adjacent to each valve and Tee, at each side of penetration of structure or enclosure, and at each obstruction.

END OF SECTION 220553

SECTION 220584 – THROUGH-PENETRATION FIRESTOP SYSTEMS

PART 1 – GENERAL

1.1 RELATED DOCUMENTS

A. Drawings and general provisions of the Contract, including General and Supplementary Conditions, Section 220500 and Division 1 Specification Sections, apply to this Section.

1.2 WORK INCLUDED

A. Through-penetration firestop systems for penetrations through the following fire-resistance-rated assemblies, including both empty openings and openings containing penetrating items:

1. Floors
2. Roofs
3. Walls and partitions
4. Smoke barriers
5. Construction enclosing compartmentalized areas.
6. Other rated assemblies.

1.3 RELATED SECTIONS

A. Examine all drawings and criteria sheets and all other Sections of the Specifications for requirements which affect work under this Section whether or not such work is specifically mentioned in this Section.

1. Section 220500 – Basic Plumbing Materials and Methods
2. Section 220510 – Underground Plumbing
3. Section 220529 – Hangers and Supports
4. Section 220548 – Plumbing vibration Controls & Seismic Restraints
5. Section 220553 – Plumbing Identification
6. Section 221110 – Plumbing Valves
7. Section 221120 – Plumbing Distribution
8. Section 221130 – Drainage and Vent Piping
9. Section 221140 – Plumbing Specialties
10. Section 223000 – Plumbing Equipment
11. Section 224000 – Plumbing Fixtures
12. Section 226000 – Laboratory Plumbing Systems

1.4 REFERENCES

A. American Society for Testing and Materials Standards (ASTM):

1. ASTM E84: Standard Test Method for Surface Burning Characteristics of Building Materials

2. ASTM E814: Standard Test Methods for Fire Tests of Through-Penetration Firestops

3. ASTM E119: Standard Test Methods for Fire Tests of Building Construction Materials

4. ASTM E1399: Standard Test Methods for Cyclic Movement and Measuring of Joint Systems

5. ASTM E1725: Standard Test Methods for Fire Tests of Fire-Resistive Barrier Systems of Electrical Systems Components

6. ASTM E1966: Standard Test Methods for Fire Tests of Joints

B. Underwriters Laboratories, Inc. (UL):

1. UL 723 Surface Burning Characteristics of Building Materials

2. UL 1479 Fire Tests of Through-Penetration Firestops, including optional air leak test

3. UL 2079 Fire Test of Building Joint Firestop systems

4. UL Fire Resistance Directory (Component Listing Test Criterion)

C. National Fire Protection Agency (NFPA)

1. NFPA 80 Standard Fire Door and Window Assembly Tolerances

2. NFPA 252 Standard Fire Test for Fire Rated Doors (not specified for positive or negative furnace test pressure)

3. NFPA 257 Standard Fire Test for Fire Rated Windows (not specified for positive or negative furnace test pressure)

4. NFPA 101 Life Safety Code

5. NEC 70 National Electrical Code

1.5 PERFORMANCE REQUIREMENTS

A. General: For the following constructions, provide through-penetration firestop systems that are produced and installed to resist spread of fire according to requirements indicated, resist passage of smoke and other gases, and maintain original fire-resistance rating of assembly penetrated.

1. Fire-resistance-rated load-bearing walls, including partitions, with fire-protection-rated openings.

2. Fire-resistance-rated non-load-bearing walls, including partitions, with fire-protection-rated openings.

3. Fire-resistance-rated floor assemblies.

4. Fire-resistance-rated roof assemblies.

B. F-Rated Systems: Provide through-penetration firestop systems with F-ratings indicated, as determined per ASTM E 814, but not less than that equaling or exceeding fire-resistance rating of constructions penetrated.

C. T-Rated Systems: For the following conditions, provide through-penetration firestop systems with T-ratings indicated, as well as F-ratings, as determined per ASTM E 814, where systems protect penetrating items exposed to potential contact with adjacent materials in occupiable floor areas.

1. Penetrations located outside wall cavities.

2. Penetrations located outside fire-resistive shaft enclosures.

3. Penetrations located in construction containing fire-protection rated openings.

4. Penetrating items larger than 4-inch diameter normal pipe or 16 sq. in. in overall cross-sectional area.

D. For through-penetration firestop systems exposed to view, traffic, moisture, and physical damage, provide product that after curing do not deteriorate when exposed to these conditions both during and after construction.

1. For piping penetrations for plumbing and wet pipe sprinkler systems, provide moisture-resistant through-penetration firestop systems.

2. For floor penetrations with annular spaces exceeding 4 inches in width and exposed to possible loading and traffic, provide firestop systems capable of supporting floor loads involved either by installing floor plates or by other means.

3. For penetrations involving insulated piping, provide through-penetration firestop systems not requiring removal of insulation.

E. For through-penetration firestop systems exposed to view, provide products with flame-spread ratings of less than 25 and smoke-development ratings of less than 450, as determined per ASTM E 84.

1.6 SUBMITTALS

A. See Section 220500 and General Conditions for additional requirements.

B. Product Data: For each type through-penetration firestop system product indicated.

C. Shop Drawings: For each through-penetration firestop system show each kind of construction condition penetrated, relationships to adjoining construction, and kind of penetrating items. Include firestop design designation of testing and inspecting agency acceptable to authorities having, jurisdiction that evidences compliance with requirements for each condition indicated.

1. Submit documentation, including illustrations, from a qualified testing and inspecting agency that is applicable to each through-penetration firestop system configuration for construction and penetrating items.

2. Where Project conditions require modification of qualified testing and inspecting agency's illustration to suit a particular through-penetration firestop condition, submit illustration, with modifications marked, approved by through-penetration firestop system manufacturer's fire-protection engineer.

D. Submit complete plans indicating clearly where all seals are located and the type of seal to be used at that location

E. Qualification Data: For firms and persons specified to demonstrate their capabilities and experience. Include lists of completed projects with project names and addresses, names and addresses of architects and owners, and other information specified.

F. Product Certificates: Signed by manufacturers of through-penetration firestop system products certifying that products furnished comply with requirements.

G. Product Test Reports: From a qualified testing agency indicating through-penetration firestop system complies with requirements, based on comprehensive testing of current products.

1.7 QUALITY ASSURANCE

A. Installer Qualifications: An experienced installer who has completed through-penetration firestop systems similar in material, design, and extent to that indicated for this Project and whose work has resulted in construction with a record of successful in-service performance.

B. Source Limitations: Obtain through-penetration firestop systems, for each kind of penetration and construction condition indicated, from a single manufacturer.

C. Fire-Test-Response Characteristics: Provide through-penetration firestop systems that comply with the following requirements and those specified in "Performance Requirements" Article:

1. Through-Penetration Firestop Systems tests are performed by a qualified testing and inspecting agency. A qualified testing and inspecting agency is UL, ITS, or another agency performing testing and follow-up inspection services for firestop systems acceptable to authorities having jurisdiction.

2. Through-penetration firestop systems are identical to those tested per ASTM E 814. Provide rated systems complying with the following requirements:

a. Through-penetration firestop system products hear classification marking of qualified testing and inspecting agency.

b. Through-penetration firestop systems correspond to those indicated by reference to through-penetration firestop system designations listed by the following:

1) UL in “Fire Resistance Directory.”
2) ITS in “Directory of Listed Products.”

1.8 DELIVERY, STORAGE, AND HANDLING

A. Deliver through-penetration firestop system products to Project site in original, unopened containers or packages with intact and legible manufacturers’ labels identifying product and manufacturer, date of manufacture; lot number; shelf life, if applicable, qualified testing and inspecting agency’s classification marking applicable to Project; curing time; and mixing instructions for multicomponent materials.

B. Store and handle materials for through-penetration firestop systems to prevent their deterioration or damage due to moisture, temperature changes, contaminants, or other causes.

1.9 PROJECT CONDITIONS

A. Environmental Limitations: Do not install through-penetration fires top systems when ambient or substrate temperatures are outside limits permitted by through penetration firestop system manufacturers or when substrates are wet due to rain, frost, condensation, or other causes.

B. Ventilate through-penetration firestop systems per manufacturer’s written instructions by natural means or, where this is inadequate, forced-air circulation.

1.10 COORDINATION

A. Coordinate construction of openings and penetrating items to ensure that through-penetration firestop systems are installed according to specified requirements.

B. Coordinate sizing of sleeves, openings, core-drilled holes, or cut openings to accommodate through-penetration firestop systems.

C. Notify Owner’s inspecting agency at least seven days in advance of through-penetration firestop system installations; confirm dates and times on days preceding each series of installations.

D. Do not cover up through-penetration firestop system installations that will become concealed behind other construction until Owner’s inspecting agency and building inspector, if required by authorities having jurisdiction, have examined each installation.

PART 2 – PRODUCTS

2.1 MANUFACTURERS

A. Acceptable manufacturers subject to compliance with the specifications shall be one of following:

1. A/D Fire Protection Systems, Inc.
2. Hilti Construction Chemicals, Inc.
3. Nelson Firestop Products
4. RectorSeal Corporation (The)
5. Specified Technologies Inc.
6. 3M Fire Protection Products
7. Tremco
8. United Stated Gypsum Company

2.2 FIRESTOPPING GENERAL

A. Compatibility: Provide through-penetration firestop systems that are compatible with one another, with the substrates forming openings, and with the items, if any, penetrating through-penetration firestop systems, under conditions of service and application, as demonstrated by through-penetration firestop system manufacturer based on testing and fired experience.

B. Accessories: Provide components for each through-penetration firestop system that are needed to install fill materials and to comply with "Performance Requirements" Article. Use only components specified by through-penetration firestop system manufacturer and approved by the qualified testing and inspecting agency for firestop systems indicated. Accessories include, but are not limited to, the following items:

1. Permanent forming/damming/backing materials, including the following:

   a. Slag-/rock-wool-fire insulation.

   b. Sealants used in combination with other forming/damming/backing materials to prevent leakage of fill materials in liquid state.

   c. Fire-rated form board

2. Temporary forming materials
3. Substrate primers
4. Collars
5. Steel sleeves

2.3 MIXING

A. For those products requiring mixing before application, comply with through-penetration firestop system manufacturer's written instructions for accurate proportioning of materials, water (if required), type of mixing equipment, selection of mixer speeds mixing containers, mixing time, and other items or procedures needed to produce products of uniform quality with optimum performance characteristics for application indicated.

PART 3 – EXECUTION

3.1 EXAMINATION

A. Examine substrates and conditions, with Installer present, for compliance with requirements for opening configurations, penetrating items, substrates, and other conditions affecting performance.

B. Proceed with installation only after unsatisfactory conditions have been corrected.

3.2 PREPARATION

A. Surface Cleaning: Clean out openings immediately before installing through-penetration firestop systems to comply with written recommendations of firestop systems manufacturer and the following requirements:

1. Remove from surfaces of openings substrates and from penetrating items foreign materials that could interfere with adhesion of through-penetration firestop systems.

2. Clean opening substrates and penetrating items to produce clean, sound surfaces capable of developing optimum bond with through-penetration firestop systems. Remove loose particles remaining from cleaning operation.

3. Remove laitance and form-release agents from concrete.

B. Priming: Prime substrates where recommended in writing by through-penetration firestop system manufacturer using that manufacturer's recommended products and methods. Confine primers to areas of bond; do not allow spillage and migration onto exposed surfaces.

C. Masking Tape: Use masking tape to prevent through-penetration firestop systems from contacting adjoining surfaces that will remain exposed on completion of Work and that would otherwise be permanently stained or damaged by such contactor by cleaning methods used to remove smears from firestop systems materials. Remove tape as soon as possible without disturbing firestop system's seal with substrates.

3.3 THROUGH-PENETRATION FIRESTOP SYSTEM INSTALLATION

A. General: Install through-penetration firestop systems to comply with "Performance Requirements" Article and firestop system manufacturer's written installation instructions and published drawings for products and applications indicated.

B. Install forming/damming/backing materials and other accessories of types required to support fill materials during their application and in the position needed to produce cross-sectional shapes and depths required to achieve fire ratings indicated.

1. After installing fill materials, remove combustible forming materials and other accessories not indicated as permanent components of firestop systems.

C. Install fill materials for firestop systems by proven techniques to produce the following results:

1. Fill voids and cavities formed by openings, forming materials, accessories, and penetrating items as required to achieve fire-resistance ratings indicated.

2. Apply materials so they contact and adhere to substrates formed by openings and penetrating items.

3. For fill materials that will remain exposed after completing Work, finish to produce smooth, uniform surfaces that are flush with adjoining finishes.

3.4 FIELD-QUALITY CONTROL

A. Inspecting Agency: Owner will engage a qualified independent inspecting agency to inspect through-penetration firestop systems and to prepare test reports.

1. Inspecting agency will state in each report whether inspected through-penetration firestop systems comply with or deviate from requirements.

B. Proceed with enclosing through-penetration firestop systems with other construction only after inspection reports are issued.

C. Where deficiencies are found, repair or replace through-penetration firestop systems so they comply with requirements.

3.5 IDENTIFICATION

A. Identify through-penetration firestop systems with pressure-sensitive, self-adhesive, preprinted vinyl labels. Attach labels permanently to surfaces of penetrated construction on both sides of each firestop system installation where labels will be visible to anyone seeking to remove penetrating items or firestop systems. Include the following information on labels.

1. The words: "Warning-Through-Penetration Firestop System-Do Not Disturb. Notify Building Management of Any Damage."
2. Contractor's name, address, and phone number.
3. Through-penetration firestop systems designation of applicable testing and inspecting agency.
4. Date of installation.
5. Through-penetration firestop systems manufacturer's name.
6. Installer's name.

3.6 CLEANING AND PROTECTION

A. Clean off excess fill materials adjacent to openings as Work progresses by methods and with cleaning materials that are approved in writing by through-penetration firestop system manufacturers and that do not damage materials in which openings occur.

B. Provide final protection and maintain conditions during and after installation that ensure through-penetration firestop systems are without damage or deterioration at time of Substantial Completion. If despite such protection, damage or deterioration occurs, cut out and remove damaged or deteriorated through-penetration firestop systems immediately and install new materials to produce through-penetration firestop systems complying with specified requirements.

END OF SECTION 230584

SECTION 221110 - PLUMBING VALVES

PART 1 - GENERAL

1.1 WORK INCLUDED

A. The work shall include labor, materials, tools, equipment, transportation, insurance, temporary protection, supervision and incidental items essential for proper installation and operation, even though not specifically mentioned or indicated on the drawings but which are usually provided or are essential for proper installation of systems related to this Section, as indicated on the drawings and specified herein.

B. The specification and drawings described the minimum requirements that must be met for the installation of work as shown on the drawings and as specified hereinunder.

C. Shop Drawings

1.2 RELATED SECTIONS

A. Examine drawings and criteria sheets and all other Sections of the Specifications for requirements which affect work under this Section whether or not such work is specifically mentioned in this Section.

1. Section 220500 – Basic Plumbing Materials and Methods
2. Section 221120 – Plumbing Distribution Piping
3. Section 221130 – Drainage and Vent Piping
4. Section 221140 – Plumbing Specialties
5. Section 223000 – Plumbing Equipment
6. Section 224000 – Plumbing Fixtures
7. Section 226000 – Laboratory Plumbing Systems

1.3 REFERENCES

A. Applicable provisions of the following Codes and Trade Standard Publications shall apply to the work of this Section, and are hereby incorporated into, and made a part of the Contract Documents.

B. Material standards shall be as specified or detailed hereinafter and as follows:

1. ANSI American National Standards Institute
2. ASME American Society of Mechanical Engineers
3. ASTM American Society of Testing Materials
4. AWS American Welding Society
5. CS Commercial Standards, U.S. Dept. of Commerce
6. FM Factory Mutual
7. FS Federal Specification, U.S. Government
8. MSS Manufacturers Standardization Society of the Valve and Fittings Industry
9. UL Underwriters Laboratories, Inc.

10. OSHA Occupational Safety and Health Act
11. NFPA National Fire Protection Assn.

C. All valves to be designed, manufactured and tested to the following standards and/or reference societies:

1. MSS SP-67 – Butterfly Valves (Lug and Wafer); Manufacturers Standardization Society of the Valve and Fittings Industry.
2. MSS SP-68 – Butterfly Valves: High Performance (High Pressure Butterfly Valves with Offset Disc design); Manufacturers Standardization Society of the Valve and Fittings Industry.
3. MSS SP-69 – Pipe Hangers and Supports – Selection and Application; Manufacturers Standardization Society of the Valve and Fittings Industry.
4. MSS SP –70 - Iron Gate Valves, Flanged and Threaded Ends; Manufacturers Standardization Society of the Valve and Fittings Industry.
5. MSS SP-71 - Cast Iron Swing Check Valves, Flanged and Threaded Ends; Manufacturers Standardization Society of the Valve and Fittings Industry.
6. MSS SP-72 Ball Valves with Flanged or Butt Weld Ends; Manufacturers Standardization Society of the Valve and Fittings Industry.
7. MSS SP-78 - Cast Iron Plug Valves, Flanged and Threaded Ends; Manufacturers Standardization Society of the Valve and Fittings Industry.
8. MSS SP-80 – Bronze Gate, Globe, Angle and Check Valves; Manufacturers Standardization Society of the Valve and Fittings Industry.
9. MSS SP-85 – Iron Globe & Angles Valves, Flanged and Threaded Ends; Manufacturers Standardization Society of the Valve and Fittings Industry.
10. MSS SP-89 – Pipe Hangers and Supports – Fabrication and Installation Practices; Manufacturers Standardization Society of the Valve and Fittings Industry.
11. MSS SP-110- Ball Valves Threaded, Socket-Weld, Solder Joint, Grooved and Flared Ends; Manufacturers Standardization Society of the Valve and Fittings Industry.
12. MSS SP-25-Standard Marking system for Valves, Fittings, Flanges and Unions; Manufacturers Standardization Society of the Valve and Fittings Industry.
13. Threads, Flanges, Fittings shall conform to ANSI Standards: B1.1; B1.20.1; B2.4; B16.1; B16.10; B16.34; B16.5; B16.34A.
14. NFPA54 – National Fuel Gas Code; National Fire Protection Association.
15. NFPA 58 – Standard for the Storage and Handling of Liquefied Petroleum Gases; National Fire Protection Association.
16. NFPA 99 and CGA G-4-1; Medical Gas Services cleaning procedures and standards for Valves.
17. UL 1479 – Standard for Fire Tests of Through-Penetration Firestops; Underwriters Laboratories Inc.
18. ANSI 372 – Drinking water system components - Lead content

1.4 ALTERNATES

A. Refer to Section 01230 - ALTERNATES.

1.5 SYSTEM DESCRIPTION

A. Provide shut-off, gate, ball, butterfly, check, strainers, balancing and other types of valves as shown on the drawings and required for proper maintenance, isolation and safety of piping systems.

B. Provide isolation valves at system drains and piping mains and branches for fixtures and piping systems, etc., at all fixtures and equipment and before and after backflow preventers, meters, pumps, and pressure reducing valves.

1.6 SUBMITTALS

A. Refer to Section 220500.

B. Valves and strainers of the same type shall be of the same manufacturer. Before purchasing any valve, the Contractor shall submit for approval the name of the manufacturer, the figure number which he proposes to furnish, and engineering data on each figure number. For manufacturers, see schedules herein.

1.7 QUALITY ASSURANCE

A. Refer to Section 014000 – QUALITY REQUIREMENTS

B. Qualifications

1. Manufacturer: Company specializing in manufacturing valve and strainer products specified in this section, with documented 10 years experience. All valves shall be of United States manufacture.

C. Quality Standards

1. Valves and strainers shall be marked at the factory and shall contain manufacturer name, catalog or figure number, size and pressure class marked on the valve body, arrows to indicate direction of flow on check, globe and angle valves and UL label.

2. All valves used on domestic water shall have lead free wetted surfaces and shall be listed under NSF/ANSI 372.

1.8 REGULATORY REQUIREMENTS

A. Refer to Section 220500.

B. Conform to State and Local Plumbing Code for installation of water heater safety valves and backflow prevention devices.

C. Provide certificate of compliance from the authorized representative indicating approval of installation of water heaters, piping, vents and backflow prevention devices.

PART 2 - PRODUCTS

2.1 VALVES, FLANGES AND UNIONS

A. General

1. All systems under this Section shall be provided with valves to permit complete and/or sectional control of the system. They shall be located to permit easy operation, replacement and repair. They shall be installed where shown on the drawings, or as herein specified. They shall be the product of the specified manufacturer.

2. All equipment shall be installed with isolation valves for service shut off. Equipment shut off valves shall be screwed ends or flanged. If screwed ends are provided, a union between equipment and valve shall be provided.

B. Water Valves

1. Isolation/shut-off valves 3" and smaller shall be all bronze ball valves Watts Series LFB-6080/6081, Apollo 77LF-100/200, Nibco 585-70LF, Hammond UP8301/8303 or Milwaukee UPBA400/450, full port Teflon seated ball and 2-piece valve body designed for 600 psi water.

2. Isolation/shut-off valves 2 ½"" and larger shall be butterfly type, grooved ends, bronze body, bronze discs, replaceable EPDM seats, 300 psi WOG, Victaulic 608.

3. Drain valves shall consist of hose end drain or ball valve with cap and chain. Provide at all low points in water piping system and at the base of all risers so that entire system may be drained, Apollo 78LF-103, Nibco 585-70LF HC or Hammond UP8501.

4. Check valves 3” and smaller shall be Nibco S-413 –WLF, solder end, bronze body swing check, bronze disk, 200 psi WOG.

5. Check valves larger than 4” shall be Watts Series 411, Nibco F-918BLF or Hammond IR1124, flanged end, iron body with epoxy coated trim, swing check, 200 psi WOG.

6. Balancing valves for hot water circulation shall be bronze thermostatic type, JRGUTherm 6320 or ThermOmegaTech Circuit Solver with check valve, shutoff valves, regulating sleeve with adjustment scale and insulation package. Initial setting shall be 110F, corresponding to scale value “2”.

7. Press fit valves shall meet all requirements listed above and shall be of the same manufacturer as copper press fittings. See section 221120 for additional information.

C. Emergency Showers/Eyewash Stations

1. Valves 3” and smaller shall be all bronze ball valves Watts Service B-6000, Apollo 77-200, Nibco 585-70, Hammond 8501 or Milwaukee BA 100, full port teflon seated ball and 2-piece valve body designed for 600 psi WOG.

2. All isolation/shut-off valves on supplies to emergency stations (deluge showers, eye/face washers and drench hoses) shall be either locked open or have the handles removed and be labeled as “Emergency Shower Valve”.

3. Provide six (6) master keys for valves locked open.

4. Each valve shall be labeled “For Emergency Shower Valve”.

D. Sanitary/Drainage Valves

1. On discharge of each sump and ejector pump provide, one Victaulic series 318 Sump Ejector System including: 1 Vic S/365 plug valve, 1 Vic S/317 check valve, 2 Vic S/307 transition couplings, 1 Vic S/31 with grooved ends.

2. Gate valves for special waste ejector discharge shall be ASAHI/America, polypropylene, flanged ends with EPDM seals, bubble tight, quick opening valve, non rising stem, 100 psi.

3. Check valves for special waste ejector discharge shall be ASAHI/America, polypropylene, flanged ends, with EPDM seals and seats, top entry, vertical or horizontal orientation.

4. Backwater valves J.R. Smith #7012 cast iron, bronze mounted, hub end, exterior shall be waterproofed, bolted and extended cover to suit finish floor or grade.

E. Natural Gas Valves

1. Up to 1” size tee head: Walworth No. 594. Up to 2” size square head, Walworth No. 590.

2. 2 1/2” and over, flanged, iron body lubricated plug type 175 psi WOG Walworth No. 1796.

3. All natural gas valves shall be approved by the state and local codes. Provide operating wrenches with each valve.

F. Pressure Reducing Valves

1. The PRV shall be Cla-Val 990 or Watts ACV-115 Series. The valve shall maintain a constant downstream pressure regardless of demand fluctuations. The control shall be an adjustable, spring loaded, direct acting, normally open, diaphragm valve designed to permit flow when controlled pressure is less than the spring setting. The control system shall consist of an adjustable opening speed needle valve and adjustable closing speed flow control valve. The

specification shall note when valves 6” and larger are to be installed with the stem in a horizontal position.

2. Provide pressure gauges and shut-off valves on inlet and outlet of all pressure reducing valves.

G. Mixing Valves

1. Emergency station (shower and eye/facewash) mixing valve shall be Lawler 911 E-85808-01 or approved equal. The valve shall be capable of high and low flows, positive hot water shut-off, integral cold water by-pass, integral check stops, strainer, volume control, thermometer and control mechanism to fail open to full capacity flow of cold water in the event of either the hot water supply is shut down or thermostatic control failure.

2. Lavatories connected to the ~~non-~~potable system shall be provided with point of use mixing valves, Watts Model USG-B, Powers #480 or approved equal~~ where required by code~~. Device shall comply with ASSE 1016 and shall have lock feature.

H. Temperature and Pressure Relief Valves

1. Units in compliance with ANSI Z21.22, requirements and AGA certified, ASME rated, automatic reseating to suit installation, 150 psi pressure setting, 210°F setting.

I. Vacuum Relief Valve

1. Units in compliance with ANSI Z21.22, requirements, automatic cold water closed system, vent sized in accordance with 1/2 cross-sectional area of inlet piping to tank, Conbraco #37-201-01 1/2” NPT, Watts #36 or approved equal.

J. Provide at the high point of hot water piping system a 12” automatic IBBM air release valve, 125 PSI, WOG Class. Pipe drain to spill over nearest floor drain or service sink.
1. Hoffman Specialty No. 78.

K. Thermal Check Valve

1. Refer to "Check Valves" herein. Provide a 1/8" diameter hole drilled in the clapper on cold water inlet piping to tank.

L. Flanges

1. Flanges shall be companion type, faced and drilled for not less than 125# steam working pressure complete with necessary adapter, and shall be of size and material of adjacent piping.

M. Unions

1. Provide union connections to fixtures and equipment. Union connections include compression fittings, grooved couplings, and flared fittings.

    a. Unions on copper piping shall be bronze minimum working pressure of 200 psi.

    b. Unions on steel and iron shall be ferrous ground joint brass to iron, rated for the working pressure of the system.

N. Dielectric Fittings

1. Provide separation between copper and ferrous piping systems such as nipples, unions or flanges. Components shall be equal to Watts or Clearflow.

O. Solder

1. Domestic water, waste and vent: 95-5 lead free, ASTM B32.

P. Exterior domestic and fire protection water piping shall comply with Local Fire Department and Water Company.

Q. Exterior valves shall conform to all applicable requirements of American Water Works Association C500-61 Standard for Gate Valves for Fire Water Work Services.

PART 3 – EXECUTION

3.1 SYSTEM SHUTDOWN

A. The shutdown of any system shall be coordinated with the Owner's representative, at least (10) days in advance of the proposed shutdown.

B. Provide temporary services to maintain active systems during extended shutdowns as required for demolition, service tie-ins and phasing. Operation of existing shut-off valves shall be by the Owner.

3.2 VALVES

A. Provide valves, check valves and balancing valves as noted below and as indicated on drawings.

B. Shutoff Valves

1. Inlets and outlets of equipment.
2. All branch connections to mains.
3. Fixture supplies

C. Check Valves

1. Pump Discharges: Silent check valves
2. Other Locations: Types as noted

D. Valves

1. Accessible with no valve handles pointing down below horizontal position. Removable without separating or lifting piping in which valves are installed. Provide cap screws on threaded bodies. Where abutting flanged strainers or similar devices, position valve with respect to device so as to permit removal of bolts.

E. Provide drain valves at low points in water piping and where noted.

1. In Equipment Rooms

a. Up to 3" Pipe: 3/4"gate or ball valve
b. 3" to 4" Pipe: 1 " gate or ball valve
c. 5” Up Pipe: 2 " gate or ball valve

2. All drains shall be provided with a brass hose connection with a pressure rated brass cap with a chain.

a. 3/4" hose thread
b. For 1” and 2”valves use brass pipe thread by straight thread hose connection.
c. Each valve shall be provided with brass pressure rated cap and chain.
d. NO DUST COVERS SHALL BE ALLOWED or caps with holes covered by gaskets.

F. Manual air vents at high points and where required to expel air.

1. Up to 3" Pipe

a. Line size air chamber, 12" long, 1/2" gate valve.

2. 4" to 8" Pipe

a. Line size air chamber, 6" long, 1/2" gate valve.

3. 10" & Up
a. Line size pipe cap, 1/2" gate valve.

3.3 VALVE INSTALLATION

A. The entire plumbing and fire protection systems shall be supplied with valves so located, arranged and operated as to give a complete regulating control to all fixtures and apparatus.

B. Shut-off valves shall be provided on all risers, branch lines and at each piece of equipment.

C. Install check and globe valves on downstream side of the shutoff valve on hot water circulating riser and branch lines.

D. Valves, where exposed and used in connection with finished piping, shall be same finish as the pipe.

E. Provide drain valves at the heel of each plumbing water riser and at low points of the horizontal mains.

F. Provide chain operators on all valves 4" and larger located 7'-0" and higher above floor.

G. Provide shut-off valves and check valves on each pump discharge line and shut-off valve only on each pump suction line.

H. Install valves where required for proper operation of piping and equipment, including valves in branch lines necessary to isolate sections of piping. Locate valves so as to be accessible.

I. Install valves with stems pointed up, in vertical position where possible, but in no case with stems pointed downward or horizontal plane unless unavoidable. Install valve drains with hose-end adapter for each valve that must be installed with stem below horizontal plane.

J. Where insulation is indicated, install extended-stem valves, arranged in proper manner to receive insulation.

K. Install valves with bodies of metal other than cast iron where thermal or mechanical shock is indicated or can be expected to occur.

L. Do not install bronze valves and valve components in direct contact with steel, unless bronze and steel are separated by dialectic insulator. Install bronze valves in steam and condensate service and in other services where corrosion is indicated or can be expected to occur.

M. Except as otherwise indicated, install gate, ball, globe, and butterfly valves to comply with ANSI B31.1. Where throttling is indicated or recognized as principal reason for valve, install globe or butterfly valves.

N. Select and install valves with renewable seats, except where otherwise indicated.

O. Installation of Check Valves:

1. Swing Check Valves: Install in horizontal position with hinge pin horizontally perpendicular to centerline of pipe.

2. Wafer Check Valves: Install between 2 flanges in horizontal or vertical position.

3. Horizontal Lift Check Valve: Install in horizontal piping line with stem vertically upward.

4. Vertical Lift Check Valve: Install in vertical piping line with upward flow with stem vertically upward.

5. Air Compressor Lift Check Valve: Install in air compressor discharge line.

6. Spring Loaded Horizontal Lift Check Valve: Install in horizontal piping line with stem vertically upward.

P. Install valves so that they are accessible for repacking. Install with operating clearance for handle and stem.

Q. On equipment isolation valves install so that valve and piping do not interfere with equipment removal or maintenance. Install unions, grooved couplings or flanges on equipment side of valves unless valve is flanged type.

R. Provide valves of a design permitting packing while open and under pressure.

S. Provide shutoff valves in supply and return to reach item of equipment such as pumps, tanks, coils, traps, automatic valves and similar items. Valves shall be suitably located to isolate each unit to facilitate maintenance or removal of all equipment and apparatus. Valves 2- 1/2" and larger shall be flanged or grooved end, 2" and smaller shall have a union installed between valve and equipment.

T. Provide drains at low points of all liquid piping systems including each riser. Locate drain valves in Mechanical Equipment Rooms not higher than 6' above floor and pipe to nearest floor drain. Provide caped drain cocks with threaded ends for hose connections at all other drain points. Provide one 100' length of heavy-duty 1" hose.

U. Provide all valves 8" and larger with a rating of over 150 lbs. with a 1" bypass valve of same pressure rating as the bypassed valve.

V. Provide renewable bronze seat rings and bronze spindles for all cast iron body valves.

W. Use globe valves or plug cocks for all throttling service (including throttling service at pump discharges), and where noted on the drawings.

X. If globe valves are not available in the sizes required for installation in the discharge lines from the large pumps, install valves of the lubricated tapered plug type.

Y. Lubricate tapered plug cocks with the manufacturer's proper lubricant for water service before shipment to the job site. Furnish four (4) hand wrenches for each size valve, where gear operators are not required.

Z. Furnish and install all valves required to isolate sections of the piping system extending into areas scheduled for construction at a later date. Provide any and all draw-off valves which may be required to properly chlorinate the system in sections as required by the

phasing of the Building. Identify isolation and phasing valves as such with valve tags and include same on charts and as-built drawings.

AA. All connections to tanks and equipment shall be made with unions.

3.4 INTERIOR COPPER WATER PIPING INSTALLATION

A. Test all water piping in accordance with this Specification.

B. Pipe used in piping assembly must be clean of dirt and obstructions and shall have ends square and reamed before butting into the fittings.

C. Cut the tube to the required length with tube cutter designed for copper work.

D. Remove burrs from the inside and outside of the cut edge and clean the end of the tube with steel wool or sand cloth until all discoloration is removed and metal is smooth and bright.

E. Oxides will be removed by sand cloth, brush, etc.

F. Removal of oxides or discoloration of pipe and fittings by acids or self-cleaning flux is forbidden.

G. Apply a thin, uniform and complete coating of reliable brand of soldering flux meeting the ASME AWS/A5.8, lead free to the cleaned surfaces of the tube and fittings.

H. When joints are soldered, remove excess solder with a cloth or brush leaving a fillet of solder in the chamber at the end of the fitting.

I. All piping must be true and plumb and with proper pitch for draining after soldering.

J. All lines of water piping shall be protected from water hammer by shock absorbers. Where shock absorbers are used, they shall be as manufactured by Josam Mfg. Co., JR Smith, or Zurn Mfg. Co., shall conform to the Plumbing and Drainage Institute published requirements and shall be made accessible through access panels.

K. All connections to tanks and equipment shall be made with unions.

3.5 DISINFECTION OF DOMESTIC WATER SYSTEMS

A. General

1. All water piping systems shall be thoroughly disinfected with a solution containing not less than 50 ppm of available chlorine by this Plumbing Contractor. The chlorinating material shall be either liquid chlorine or sodium hypochlorite solution.

2. This work is to be supervised by the Owner's representative and performed by an Owner approved chemical testing laboratory and results sent to the

Architect/Engineer or his representative for verification. All costs shall be borne by this Plumbing Contractor.

3. The testing laboratory shall submit a summary of the test procedure to the Owner for approval prior to any work being performed. All work to be in accordance with the Owner's requirements. This Plumbing Contractor shall provide any and all valves, pipe and connections required to disinfect the water supply system totally or in part as required. Provide isolating valves and draw-off valves for proper containment, phasing and flushing.

B. Procedure

1. The water systems shall be tested and thoroughly flushed prior to chlorination.

2. The chlorine shall be introduced at a point of the system so as not to create a hazard to the existing systems. The disinfection solution shall be allowed to remain in the system for a period of 24 hours, during which period all valves and faucets shall be opened and closed several times with the chlorine drawn to all points in the system. After disinfection, the solution shall be flushed from the system with potable water until the residual chlorine content is not greater than 0.2 ppm for the domestic potable system. Prior to any further testing procedures, the Engineer and the Owner shall review all draw-off valve locations and chlorine introduction locations.

3. The Contractor is to allow ample time for the chlorination of the water systems and is to plan the chlorination just prior to occupancy if possible. If the system is to sit dormant for any extended period of time prior to occupancy, the Contractor is to flow water to all points in the building to completely flush the systems prior to occupancy. A full (3) days notice will be given the Owner and Engineer prior to the start of disinfection.

C. Tests

1. The Owner's representative shall select a location on the floor for a chlorine concentration test and a chlorine residual, a coliform bacteria and total plate count bacteria tests. The laboratory report shall include sample locations, chlorine concentration, chlorine residual, coliform bacteria count and, after flushing, total plate count bacteria tests.

2. Acceptable limits for total plate count shall be 300 per 100 ml sample. Acceptable levels of chlorine residual shall be 0.2 ppm, for the domestic potable water system.

3. If these parameters are not met, continued flushing of the water systems shall be required until they are met.

4. Full Owner acceptance of the water systems shall not be given until these parameters are met, documented and submitted by the Testing Laboratory selected.

5. Incoming exterior water mains shall be disinfected similarly except chlorine introduction shall be from the point of new water service connection to the existing main. System shall be disinfected when water pressure testing is completed and accepted.

3.6 CONNECTIONS TO EQUIPMENT

A. Furnish and install waste and vents, traps, cold water, hot water, non-domestic cold and hot water, piping, shutoffs, backflow preventers, pressure reducing valves, vacuum breakers, shock absorbers, regulators and flexible tubing for all final connections to laboratory equipment, casework and sinks provided under other Sections. Roughing for this equipment shall be as indicated on the drawings.

B. Obtain exact roughing in dimensions from manufacturers of all service locations before connecting to or roughing for equipment. Provide shutoff valves at each piece of equipment.

C. Owner provided equipment shall be furnished and set under other Sections. Roughing for and final connections to including piping shall be provided by this Contractor. Equipment included shall be:

1. Preformed sink tops
2. Sterilizers, glasswashers
3. Laboratory casework and trim

3.7 IDENTIFICATION OF SYSTEMS

A. Provide clip-on color coded piping identification markers on piping systems installed under this Section. Provide matching flow arrows to indicate direction of flow. Markers shall be Seton Nameplate Co., W.H. Brady, Westline Products or approved equal.

B. Color coding shall comply with the American Hospital Association or ANSI A13.1 Standards as directed by the Owner.

C. Install markers on each side of wall penetrations, at each valve, at tee fittings and base of risers. Spacing of markers shall not exceed 20’-0" and shall include at least one marker in each room. Letters shall not be less than 1 1/2" in height. Arrows shall not be less than 9' long.

D. Install markers on cleaned or painted piping only after piping is complete and has been accepted by the Architect. Install marker adjacent to access panels where piping is concealed.

E. Stencil equipment, such as pumps, compressors, water heaters, and tanks with the name of the equipment and equipment number. Stencils shall be at least 6" high and of a color to provide a contrast with the equipment finish.

3.8 VALVE TAGS, NAMEPLATES AND CHARTS

A. All valves on pipes of every description shall be provided with neat circular plastic valve tags of at least 1 1/2" in diameter, attached with brass hook to each valve stem or handle. Tags shall have stamped on, in letters as large as practical, the number of the valve and the service, such as "CW", "HW", and "HWC", etc., for cold water, hot water, and hot water circulation, respectively, etc. The numbers of each service shall be consecutive. Obtain approval of tag material size and numbering system from the Architect prior to installation.

B. All valves on equipment shall be numbered by 3" red plastic discs with 2" high white numbers secured to stem of valves by means of brass hooks or small link brass chain.

C. All numbers utilized shall correspond to numbers indicated for valves on the Record Drawings and on (2) printed detailed lists. These printed lists shall state the numbers and locations of each valve and the equipment or system which it controls and other necessary information such as requiring the opening or closing of another valve or valves when any one valve is to be opened and closed.

D. These printed lists shall be prepared in form to meet approval of the Architect and shall be framed under glass and mounted in place as directed by the Architect.

E. Nameplates, catalog numbers and rating identification shall be securely attached to mechanical equipment with screws or rivets. Adhesives or cements will not be permitted.

F. The Contractor shall provide for his work all valve charts including the Contractor's name and telephone number; date of chart; name and telephone number of Architectural Firm and Consulting Mechanical Engineering Firm.

3.9 FINAL ADJUSTMENTS AND BALANCING

A. Upon completion of installation and equipment start-up, adjust systems to within operation parameters, temperatures, pressures and flows. Include adjustments to pressure relief valves, pressure regulating valves, temperature control valves for water systems, and verify normally closed/open valve positions.

B. Balance water systems over a period of several days to ensure proper pressure, flows and circulating. Adjust temperature limit stops on shower valves to a maximum of 112°F. Verify proper settings for hot water circulation loops and aquastat controls. Master mixing valves shall be set at 120°F and 145°F according to their specific usage.

C. Adjust all metering and infrared control faucets to operate for a minimum of 10 seconds at a flow rate of 0.5 gpm.

END OF SECTION 221110

SECTION 221120 - PLUMBING DISTRIBUTION PIPING

PART 1 – GENERAL

1.1 WORK INCLUDED

A. The work shall include labor, materials, tools, equipment, transportation, insurance, temporary protection, supervision and incidental items essential for proper installation and operation, even though not specifically mentioned or indicated on the drawings but which are usually provided or are essential for proper installation of systems related to this Section, as indicated on the drawings and specified herein.

B. The specifications and drawings describe the minimum requirements that must be met for the installation of work as shown on the drawings and as specified hereinunder.

C. Shop drawings.

D. Field acceptance testing.

E. Specific work: Provide potable and industrial (non-potable) water piping, etc., as shown on the drawings and as specified, complete.

1.2 RELATED SECTIONS

A. Examine drawings and criteria sheets and other Sections of the Specifications for requirements which affect work under this Section whether or not such work is specifically mentioned in this Section.

1. Section 220500 – Basic Plumbing Materials and Methods
2. Section 220510 – Underground Plumbing
3. Section 221110 – Plumbing Valves
4. Section 220529 – Hangers and Supports
5. Section 220548 – Plumbing Vibration Controls and Seismic Restraints
6. Section 220553 – Plumbing Identification
7. Section 220584 – Through Penetration Firestop Systems
8. Section 221130 – Drainage and Vent Piping
9. Section 221140 – Plumbing Specialties
10. Section 223000 – Plumbing Equipment
11. Section 224000 – Plumbing Fixtures
12. Section 226000 – Laboratory Plumbing Systems

1.3 REFERENCES

A. Applicable provisions of the following Codes and Trade Standard Publications shall apply to the work of this Section, and are hereby incorporated into, and made a part of the Contract Documents.

1. Material standards shall be as specified or detailed hereinafter and as follows:

a. ANSI American National Standards Institute
b. ASME American Society of Mechanical Engineers
c. ASTM American Society of Testing Materials ASTM B88-78: Wrought Copper Fittings
d. AWS American Welding Society
e. CS Commercial Standards, U.S. Dept. of Commerce
f. FM Factory Mutual
g. FS Federal Specification, U.S. Government
h. MSS Industry Manufacturers Standardization Society of the Valve and Fittings
i. UL Underwriters Laboratories, Inc.
j. OSHA Occupational Safety and Health Act
k. ASPE American Society of Plumbing Engineers

1.4 SUBMITTALS

A. Refer to Section 220500 and General Conditions for additional requirements.

B. Submittals – The following documents shall be provided:

1. Pipe and fittings for each system.

1.5 QUALITY ASSURANCE

A. Manufacturer: Company specializing in manufacturing pipe and fitting products specified in this section, with document experience.

B. Installer: Company specializing in performing work of the type specified in this section, with document experience.

C. All grooved joint pipe couplings, fittings and specialties shall be the products of a single manufacturer. Grooving tools shall be of the same manufacturer as the grooved components.

D. All piping used on domestic water shall have lead free wetted surfaces and shall be listed under NSF/ANSI 372.

1.6 PLUMBING, DEMOLITION, RELOCATION AND ALTERATION

A. Refer to Section 220500.

1.7 CROSS AND INTER-CONNECTIONS

A. Refer to Section 220500.

1.8 DELIVERY, STORAGE AND HANDLING

A. Accept pipe and fittings on site in shipping containers with labeling in place. Inspect for damage.

PART 2 – PRODUCTS

2.1 PIPING, FITTINGS AND JOINTS

A. Cement Lined Ductile Iron Pipe and Fittings

1. Below Ground Water Service Piping (4" and Larger)

a. Class 52 ductile iron pipe with cement lining, ANSI, AWWA C-A21.10, ANSI/AWWA C104-A21.4, ANSI C111-A21.11.

b. Fittings and special castings shall be Class 250 cement lined ductile iron and shall conform to ANSI A21.10. And A21.11. Joints shall be made with push-on Tyton joints or screwed flanges and shall be rodded and clamped. Incoming water services shall be provided with two (2) Dresser model 38 or Megalug 1100 Series flexible couplings.

B. Copper Tubing and Fittings

1. All Aboveground Potable and Non-Potable Water Systems

a. Tubing to be Type L hard temper with wrought copper fittings conforming to ASTM B88-and ASME B16.22. All joints shall be soldered with ASME AWS/A5.8 lead free solder. Wheatland Tube, Cerro, Allied or approved equal.

b. Copper tubing with grooved ends and mechanical joints are acceptable for sizes 2” to 8” only. Tubing to be Type L hard temper with wrought or cast grooved end fittings conforming to ASTM B152 and ASTM B75,with copper-tube dimensioned grooved ends (flaring of tube and fitting ends to IPS dimensions are not permitted).

c. Copper tube grooved end mechanical couplings 2” to 8” only shall be “Installation Ready” stab on design, for direct ‘stab’ installation onto roll grooved copper tube without prior field disassembly and no loose parts. Two ASTM A536 ductile iron housings cast with offsetting, angle-pattern bolt pads, coated with copper-colored enamel, Grade “EHP” EPDM gasket suitable for potable water and plated steel bolts and nuts. Victaulic Style 607 QuickVic™.

C. Copper Tubing and Fittings

1. Type K Below Ground Water Systems (3" and Smaller)

a. Tubing to be Type K, soft temper brazed joints with bituminous coating. Conforming to ASTM B88 and fittings conforming to ASME B16.22. Wheatland Tube, Cerro, Allied or approved equal.

D. Galvanized Steel Pipe and Fittings

1. Aboveground Exterior Gas Train Vent, Sewage Ejector and Sump Pump Discharge

a. Schedule 40 American Standard weight and manufacture galvanized steel pipe conforming to ASTM A120-74. Threads to be American pipe thread standard. Fittings shall be 125# galvanized steel screwed. . Victaulic Style 75 carbon steel drainage fittings on sump and ejector discharge.

E. Schedule 40 Black Steel Pipe and Fittings

1. Above Ground Natural Gas, Interior Gas Train Vent

a. Black steel pipe Schedule 40 and conforming to ASTM A120-74 (seamless type). Fittings shall be black malleable screwed type conforming to ANSI B16.3-71 for pipe 2 1/2" and smaller.

b. Pipe 3" and larger and for systems where pressure exceeds 14 w.c. shall be welded.

c. Gas piping dropping inside concrete block partitions shall be factory wrapped for corrosion protection.

2.2 SLEEVES AND PLATES, ESCUTCHEONS, FIRESTOPPING AND SMOKESTOPPING

A. Refer to Section 220500.

2.3 ANCHORS, EXPANSION JOINTS AND OFFSETS

A. Make proper provisions for expansion and contraction in all parts of the hot water and hot water recirculation piping systems wherever possible by means of pipe bends, pipe offsets, swing connections or changes in direction of piping. Where piping deflection cannot be employed to absorb expansion and contraction, furnish expansion joints. Expansion joints in copper piping shall be two-ply stainless steel bellows protected from torsion and misalignment by an outer steel or brass casing. Stroke shall provide for a minimum total expansion of 1 3/4 inch per hundred feet in copper piping between anchors. Ratings shall be 150 psig w.p. and 300°F temperature, designed for use with copper pipe. Expansion joints shall be as manufactured by U.S. Flexible Metallic Tubing Company, Robertshaw-Fulton or approved equal.

B. Provide pipe guides where necessary or required to confine lateral movement and on each side of expansion loops or expansion joints. Guides for piping 2 inches and under shall be Teflon lined copper, as manufactured by Keflex-Mave Type "BC" or approved equal. Guides for piping 2 1/2 inch and up shall be fabricated steel, covered inside and outside with protective coating, top half removable.

C. All mains and risers having expansion offsets or joints shall be securely anchored to the building construction in such a manner as to throw all expansion towards the offsets of

joints. All anchors shall be constructed from heavy galvanized iron, secured to the pipe and securely fastened to the construction. Anchors shall be furnished with turnbuckles or other suitable means for adjustment. The Plumbing Contractor shall be responsible for any additional structural items that may be required for proper installation of hangers. Anchors, guides and supports shall be approved by the Architect.

D. Expansion and contraction of grooved copper tubing systems shall be provided with loops or bends installed in accordance with manufacturer's recommendations.

2.4 AIR VENTING AND DRAINAGE

A. Grade all piping, except waste piping, for drainage through equipment or through accessible hose bibb drain valves in low points so that systems can be completely free of water by gravity flow.

B. All high points in closed water piping systems shall be relieved of air through equipment vents or through accessible manual vents on the high points of the pipe lines. Vent valves on large piping and equipment shall be 1/2 inch gate valves with discharge pipes to convenient points for catching discharge; if impractical, provide caps and chains.

C. Vent valves on small piping and equipment shall be 1/4 inch gate valves with discharge pipe to convenient points for catching discharge; if impractical, provide caps and chains.

D. All draining, venting and filling of existing systems where new connections will be made under this Contract, as required, shall be provided under this Contract.

2.5 FITTINGS

A. All screwed couplings and shoulder nipples not exceeding 5" in length shall be of the same material as the pipe but of dimensions conforming to Schedule 80.

B. All fittings used at expansion loops or bends shall be of 250 lb. WSP Class.

C. Welding fittings shall be of the same material and schedule as the pipe to which they are welded. Welding elbows shall be long radius pattern unless clearance conditions necessitate the use of standard radius pattern. Welded tees shall be used where difference between main and branch are two (2) standard pipe sizes or less. Branch connections shall be reinforced with Weldolets by Bonney Forge and Tool Works or welding saddles by Tube-Turn, Walworth or approved equal. Welding fittings shall be Tube-Turn, Walworth or approved equal.

D. Unions 2" and smaller shall be screwed unless otherwise noted. Unions 2- 1/2" and larger shall be flanged. Screwed unions on wrought iron and steel pipe, unless otherwise specified, shall be of malleable iron with bronze ground seats suitable for 300 lbs. WSP. Screwed unions or brass pipe shall be brass, ground joint suitable for 300 lbs. WSP. Flanged unions shall be malleable iron, gasket type suitable for 150 lbs. WSP. Unions shall be as manufactured by Crane, Walworth or approved equal.

E. Flanges shall be of the same weight as the fittings and valves in each service category. Welding neck flanges shall be used with flanged equipment, etc., on welded lines. All flanges shall be drilled in conformance with ANSI B16.5, 125 lb. or 300 lb. standard steel. Welding flanges shall be of steel. Laps shall be machined on front, back and edge and loose flanges have face and bore machined. Screwed flanges shall be faced perpendicular to adjoining pipe.

F. Flange joints shall be faced true, packed and made up perfectly square and tight. Each flange joint shall be provided with best grade steel bolts with square forged heads and with cold-pressed semi-finished hexagon nuts. Bolts and nuts shall be dripped in a mixture of graphite and oil, just before installation. All threads shall be U.S. Standard Gaskets shall be one-piece ring type 1/16" thick full face, suitable for temperature, pressure and service of systems.

G. Dielectric Fitting: Dissimilar connections shall be made with an insulating dielectric material such as Teflon or neoprene between copper, brass or bronze and black steel pipe.

2.6 EXTERIOR WALL/PIPE PENETRATIONS

A. Underground pipe through wall penetrations shall be sealed with positive hydrostatic seals. The modular mechanical seals shall consist of interlocking rubber links shaped to continuously fill the annular space between the pipe and wall opening. The seals shall be "LINK SEALS" as manufactured by Thunderline Corporation of Wayne, Michigan or an approved equal. Caulking or other type of mastic sealants or lead or oakum joints are not acceptable. The Contractor shall determine the required inside diameter of each wall opening or sleeve to fit the pipe LINK SEAL. The LINK SEAL size and model shall be as recommended by the manufacturer's instructions.

1. Seal: Type "C".

2.7 EXPANSION AND BALL JOINTS

A. Expansion Joints of the Packed Slip Type:

1. Internally guided, piston ring type, with cast iron or fabricated carbon steel bodies and flanged connections. Slips: Polished, chromium plated, seamless steel, with positive stop to limit outward movement and prevent disengagement of the slip. Fit the integral end of the slip and replacement of the packing rings while the joint is installed in the line and under full operating pressure. Arrange the internal guide to prevent metal-to-metal sliding contract with the polished surface of the slip. Provide deep stuffing boxes furnished with close fitting, vent connection, nipple and valve in the body of the joint, between the piston rings and the stuffing box for use during servicing operations. Rate all joints for the traverse, the temperature rating, the pressure rating and the test pressure rating of the service.

B. Expansion Joints of the Bellows Type:

1. Hydraulically formed, packless, stainless steel bellows type, self-equalizing, internally guided, full bore size, fully enclosed with flanged connections. Expansion joint flange ratings to those required for the traverse, the temperature rating, the pressure rating and the test pressure rating of the service.

C. Expansion Joints of the Flexible Ball Type:

1. Install in strict accordance with manufacturer's instructions. Torque flange bolts on the ball joints at the factory for the required duty and furnish with seals on all flange bolts to prevent any unauthorized readjustment. Rate all joints for the traverse, the temperature rating, the pressure rating, the test pressure rating, offset and gasket type of the service.

D. Expansion joints shall be manufactured by ADSCO, Barko, Flexonics, or approved equal.

2.8 DRIP PANS

A. 18 gauge galvanized sheet steel, reinforced, properly supported watertight with 1- 1/4" drain.

B. Provide under piping where impossible to route water or drainage piping to avoid passing over or within 5 feet of electrical apparatus and in rooms containing only electrical equipment.

C. Provide under all ground floor plumbing offsets and where indicated on plans.

2.9 GALVANIZING

A. Hot process inside and outside of pipe with zinc coating, minimum 2 ounces per sq. ft.

1. In accordance with American Hot-Dip Galvanizers Associations.

2.10 CHROMIUM PLATING

A. In accordance with U.S. Government Standards under license from Chrome Corporation of America.

B. Clean material and polish before plating.

C. Plating: Heavy, evenly applied, guaranteed not strip or peel.

D. Brass or Copper Plating: Nickel plated before chromium plating, ASTM B-281, B-456.

E. Finish: Polished or satin as noted.

2.11 MISCELLANEOUS MATERIALS

A. Galvanized Sheet Steel: ASTM A525.

B. Cement: ASTM C-150.

C. Sand, Stone and Gravel for Concrete: ASTM C-33.

D. Sand for Mortar and Grout: ASTM C-144.

E. Reinforcing Rods: ASTM A-615.

F. Reinforcing Wire Mesh: ASTM A-185.

PART 3 – EXECUTION

3.1 EXAMINATION / PREPARATION

A. Inspect site conditions in areas where piping and equipment will be installed and verify the impact of the installation before fabricating systems to be installed.

B. Notify the Architect immediately regarding any substantially different conditions than those shown in the Contract Documents.

3.2 INTERIOR COPPER WATER PIPING INSTALLATION

A. Test all water piping in accordance with this Specification.

B. Pipe used in piping assembly must be clean of dirt and obstructions and shall have ends square and reamed before butting into the fittings.

C. Cut the tube to the required length with tube cutter designed for copper work.

D. Remove burrs from the inside and outside of the cut edge and clean the end of the tube with steel wool or sand cloth until all discoloration is removed and metal is smooth and bright.

E. Oxides will be removed by sand cloth, brush, etc.

F. Removal of oxides or discoloration of pipe and fittings by acids or self-cleaning flux is forbidden.

G. Apply a thin, uniform and complete coating of reliable brand of soldering flux meeting the ASME AWS/A5.8, lead free to the cleaned surfaces of the tube and fittings.

H. When joints are soldered, remove excess solder with a cloth or brush leaving a fillet of solder in the chamber at the end of the fitting.

I. All piping must be true and plumb and with proper pitch for draining after soldering.

J. All lines of water piping shall be protected from water hammer by shock absorbers. Where shock absorbers are used, they shall be as manufactured by Josam Mfg. Co., JR Smith, or Zurn Mfg. Co., shall conform to the Plumbing and Drainage Institute published requirements and shall be made accessible through access panels.

K. All connections to tanks and equipment shall be made with unions.

L. Grooved joint piping systems shall be installed in accordance with the manufacturer's guidelines and recommendations. All grooved couplings, fittings and specialties shall be supplied by same manufacturer. The gasket style and elastomeric material (grade) shall be verified as suitable for the intended service as specified. Gaskets shall be molded and produced by Victaulic. Grooved end shall be clean and free from indentations, projections, and roll marks in the area from pipe end to groove for proper gasket sealing. A Victaulic factory-trained field representative shall provide on-site training for contractor's field personnel in the proper use of grooving tools and installation of grooved piping products. Factory-trained representative shall periodically review the product installation. Contractor shall remove and replace any improperly installed products.

3.3 EXTERIOR WATER PIPING INSTALLATION

A. All outside underground water piping shall have a minimum cover of five feet.

B. The water main shall be laid and maintained to the required lines and grades.

C. All joints shall be left exposed to view until tests have been completed and approved.

D. Provide retainer clamps and duplex flexible couplings on the incoming exterior service at the building wall. Clamps shall be 1/2" by 2" for pipe 4" in diameter and 5/8" by 2 1/2" for pipe 6" and larger. Rods shall be 3/4" diameter. Flexible couplings shall be installed 3' apart.

3.4 DISINFECTION OF DOMESTIC WATER SYSTEMS

A. General

1. All water piping systems shall be thoroughly disinfected with a solution containing not less than 50 ppm of available chlorine by this Plumbing Contractor. The chlorinating material shall be either liquid chlorine or sodium hypochlorite solution.

2. This work is to be supervised by the Owner's representative and performed by an Owner approved chemical testing laboratory and results sent to the Architect/Engineer or his representative for verification. All costs shall be borne by this Plumbing Contractor.

3. The testing laboratory shall submit a summary of the test procedure to the Owner for approval prior to any work being performed. All work to be in accordance with the Owner's requirements. This Plumbing Contractor shall provide any and all valves, pipe and connections required to disinfect the water supply system

totally or in part as required. Provide isolating valves and draw-off valves for proper containment, phasing and flushing.

B. Procedure

1. The water systems shall be tested and thoroughly flushed prior to chlorination.

2. The chlorine shall be introduced at a point of the system so as not to create a hazard to the existing systems. The disinfection solution shall be allowed to remain in the system for a period of 24 hours, during which period all valves and faucets shall be opened and closed several times with the chlorine drawn to all points in the system. After disinfection, the solution shall be flushed from the system with potable water until the residual chlorine content is not greater than 0.2 ppm for the domestic potable system. Prior to any further testing procedures, the Engineer and the Owner shall review all draw-off valve locations and chlorine introduction locations.

3. The Contractor is to allow ample time for the chlorination of the water systems and is to plan the chlorination just prior to occupancy if possible. If the system is to sit dormant for any extended period of time prior to occupancy, the Contractor is to flow water to all points in the building to completely flush the systems prior to occupancy. A full (3) days notice will be given the Owner and Engineer prior to the start of disinfection.

C. Tests

1. The Owner's representative shall select a location on the floor for a chlorine concentration test and a chlorine residual, a coliform bacteria and total plate count bacteria tests. The laboratory report shall include sample locations, chlorine concentration, chlorine residual, coliform bacteria count and, after flushing, total plate count bacteria tests.

2. Acceptable limits for total plate count shall be 300 per 100 ml sample. Acceptable levels of chlorine residual shall be 0.2 ppm, for the domestic potable water system.

3. If these parameters are not met, continued flushing of the water systems shall be required until they are met.

4. Full Owner acceptance of the water systems shall not be given until these parameters are met, documented and submitted by the Testing Laboratory selected.

5. Incoming exterior water mains shall be disinfected similarly except chlorine introduction shall be from the point of new water service connection to the existing main. System shall be disinfected when water pressure testing is completed and accepted.

3.5 CONNECTIONS TO EXISTING SYSTEMS

A. Water Systems

1. All piping systems to be connected to the existing systems shall only be connected once the new piping is installed, tested and chlorinated. The connection to the existing piping system shall be made in cooperation with the Owner.

3.6 CONNECTIONS TO EQUIPMENT

A. Refer to Section 220500.

3.7 TESTING OF PIPING SYSTEMS

A. General

1. All piping systems shall be subjected to testing with water, gas or air as noted and shall hold tight at the pressure head stated for the time interval required without adding air or water. While any system is being tested, required head or pressure shall be maintained until all joints are inspected. All systems tested in the existing building shall be tested with air before water.

2. All tests shall be witnessed by the inspector having jurisdiction and the Architect/Engineer, with 48 hour notice given these authorities.

3. All equipment, material and labor required for testing any of the various systems or any part thereof shall be furnished by this Contractor.

B. Water Piping Systems: Upon completion of all water supply systems or a section of them as required, they shall be tested and proved tight under a water pressure of 150 psi. Gauge should be located on the lowest point of the new system and pressure shall hold for a period of (1) hour without introducing additional water. The water used for testing shall be from a domestic water source of supply.

C. Defective Work: If inspection or tests show defects, such defective work or material shall be replaced and inspection and tests shall be repeated. All repairs to piping shall be made with new materials. No caulking of screwed joints or holes will be acceptable.

3.8 NATURAL GAS PIPING INSTALLATION

A. Gas meter(s), service piping to meter(s), and regulators will be provided by the local gas company. Gas piping provided under this Contract shall begin on the building side of the meter and extend to gas fired equipment.

1. All piping shall pitch to drains at drip legs at least 6" long. Branch connections shall be taken off the top or side of the piping main.

2. At each equipment connection, on the downstream side of any required equipment regulators, provide shutoff valve and union with drip leg.

3. At gas pressure reducing valve and all other vented gas regulators, provide individual vent piping to the exterior, with turned down elbow and stainless steel insect screen.

4. All gas valves shall be installed in accessible locations. Valves shall be provided at each branch runout from the supply main.

5. This Contractor shall install all gas valves supplied by equipment suppliers.

6. Piping shall be securely fastened, separately hung and shall not be strapped or supporting other systems. Piping drops in concrete block walls or buried shall be factory wrapped for protection from corrosion.

7. All gas piping to laboratories shall first be connected to a master gas shut-off valve located in a cabinet immediately inside the lab.

8. Furnish and install aluminum check valves in all gas piping that enters rooms where compressed air is installed or when both compressed air and gas piping connect to the same piece of equipment.

3.9 NATURAL GAS TESTING

A. All gas piping shall be tested in accordance with NFPA-54 latest edition.

B. Prior to acceptance and initial operation, all piping installations shall be inspected and pressure tested to determine that the materials, design, fabrication, and installation practices comply with the requirements of this code.

C. Where repairs or additions are made following the pressure test, the affected piping shall be tested. Minor repairs and additions are not required to be pressure tested provided that the work is inspected and connections are tested with a noncorrosive leak-detecting fluid or other leak-detecting methods approved by the authority having jurisdiction.

D. The test medium shall be air, nitrogen, carbon dioxide, or an inert gas.

E. Pipe joints, including welds, shall be left exposed for examination during the test. Appliances and equipment that are not to be included in the test shall be either disconnected from the piping or isolated by blanks, blind flanges, or caps. Flanged joints at which blinds are inserted to blank off other equipment during the test shall not be required to be tested.

F. Where the piping system is connected to appliances, equipment, or equipment components designed for operating pressures of less than the test pressure, such appliances, equipment, or equipment components shall be isolated from the piping system by disconnecting them and capping the outlet(s).

G. Test pressure shall be measured with a manometer or with a pressure measuring device designed and calibrated to read, record, or indicate a pressure loss due to leakage during the pressure test period. The source of pressure shall be isolated before the pressure tests are made. Mechanical gauges used to measure test pressures shall have a range such that the highest end of the scale is not greater than 5 times the test pressure. The test pressure to be used shall be no less than 1½ times the proposed maximum working pressure, but not less than 3 psi (20 kPa), irrespective of design pressure. Test duration shall be not less than ½ hour for each 500 ft3 (14 m3) of pipe volume or fraction thereof. The duration of the test shall not be required to exceed 24 hours. The piping system shall withstand the test pressure specified without showing any evidence of leakage or other defects. Any reduction of test pressures as indicated by pressure gauges shall be deemed to indicate the presence of a leak unless such reduction can be readily attributed to some other cause.

H. The leakage shall be located by means of an approved gas detector, a noncorrosive leak detection fluid, or other approved leak detection methods. Matches, candles, open flames, or other methods that provide a source of ignition shall not be used

I. Where leakage or other defects are located, the affected portion of the piping system shall be repaired or replaced and retested.

J. Gas utilization equipment shall not be placed in operation until after the piping system has been tested and purged.

K. When piping is placed in operation, the air or inert gas in the piping shall be displaced with fuel gas. The air can be safely displaced with fuel gas provided that a moderately rapid and continuous flow of fuel gas is introduced at one end of the line and air is vented out at the other end. The fuel gas flow shall be continued without interruption until the vented gas is free of air. The point of discharge shall not be left unattended during purging. After purging, the vent shall then be closed.

L. The open end of piping systems being purged shall not discharge into confined spaces or areas where there are sources of ignition unless precautions are taken to perform this operation in a safe manner by ventilation of the space, control of purging rate, and elimination of all hazardous conditions.

M. Contractor must supply a Gas Purging Plan to the UConn Fire Department for review and approval at least (1) week in advance. Plans must meet the provisions of the CT Gas Code regulation 29-329-3 adopted 1996 NFPA 54 edition for testing and 2009 NFPA 54 TIA for purging.

3.10 IDENTIFICATION OF SYSTEMS

A. Refer to Section 220553.

3.11 Expansion Requirements:

A. All piping shall be installed throughout the project with due regard for expansion to prevent damage to the building, equipment and piping. Provide anchors, loops or

approved type expansion joints where indicated or required for the accurate control of movement.

B. Branch connections to mains for risers shall be made with minimum of three 90 degree elbows.

C. Bullhead connections in any piping service are expressly prohibited.

D. Expansion pipe loops shall be supplemented with adequate guides as close to loops as possible to preserve alignment and pitch.

E. Securely support pipe anchors, constructed of steel angles and channels, required to keep pipe movement within area of expansion provision. Submit anchor details for approval before installation.

F. Provide adequate expansion allowance for service temperatures and piping materials.

G. When installing piping with loop or bend expansion, subject piping to cold spring, which will take care of about half of total expansion between hot and cold conditions. Make riser offsets in manner to avoid pocket forming due to expansion. Submit anchor details for approval before installation.

END OF SECTION 221120

SECTION 221130 - DRAINAGE AND VENT PIPING

PART 1 – GENERAL

1.1 WORK INCLUDED

A. The work shall include labor, materials, tools, equipment, transportation, insurance, temporary protection, supervision and incidental items essential for proper installation and operation, even though not specifically mentioned or indicated on the drawings but which are usually provided or are essential for proper installation of systems related to this Section, as indicated on the drawings and specified herein.

B. The specifications and drawings describe the minimum requirements that must be met for the installation of work as shown on the drawings and as specified hereinunder.

C. Shop drawings.

D. Field acceptance testing.

E. Specific Work

1. Provide storm, sanitary and specialty drain piping, fittings, piping network, branches and connections to piping, as shown on the drawings and as specified complete.

1.2 RELATED SECTIONS

A. Examine drawings and criteria sheets and other Sections of the Specifications for requirements which affect work under this Section whether or not such work is specifically mentioned in this Section.

1. Section 220500 – Basic Plumbing Materials and Methods
2. Section 220510 – Underground Plumbing
3. Section 220523 – Plumbing Valves
4. Section 220529 – Hangers and Supports
5. Section 220548 – Plumbing Vibration Controls and Seismic Restraints
6. Section 220553 – Plumbing Identification
7. Section 220584 – Through Penetration Firestop Systems
8. Section 221120 – Plumbing Distribution Piping
9. Section 221140 – Plumbing Specialties
10. Section 223000 – Plumbing Equipment
11. Section 224000 – Plumbing Fixtures
12. Section 226000 – Laboratory Plumbing Systems

1.3 REFERENCES

A. Applicable provisions of the following Codes and Trade Standard Publications shall apply to the work of this Section, and are hereby incorporated into, and made a part of the Contract Documents.

B. Material standards shall be as specified or detailed hereinafter and as follows:

1.	ANSI	American National Standards Institute ANSI B16.1, B16.2, B16.5, B16.4, B.16.9: Cast Iron Fittings & Flanges ANSI B16.3: Malleable Iron Fittings
2.	ARI	American Refrigeration Institute
3.	ASHRAE	American Society of Heating, Refrigeration and Air Conditioning Engineers
4.	ASME	American Society of Mechanical Engineers
5.	ASTM	American Society of Testing Materials ASTM A-888: Cast Iron Piping
6.	AWS	American Welding Society
7.	CS	Commercial Standards, U.S. Dept. of Commerce
8.	FM	Factory Mutual
9.	FS	Federal Specification, U.S. Government
10.	MSS Industry	Manufacturers Standardization Society of the Valve and Fittings
11.	UL	Underwriters Laboratories, Inc.
12.	OSHA	Occupational Safety and Health Act
13.	CISPI Fittings	Cast Iron Soil Pipe Institute CISPI 301 Cast Iron Pipe and
14.	ASPE	American Society of Plumbing Engineers

1.4 SUBMITTALS

A. Refer to Section 220500 and General Conditions for additional requirements.

B. Submittals: The following documents shall be provided:

1. Pipe and fittings for each system.

1.5 QUALITY ASSURANCE

A. Manufacturer: Company specializing in manufacturing pipe and fitting products specified in this section, with documented experience.

B. All cast iron soil pipe and fittings shall be marked with the collective trademark of the Cast Iron Soil Pipe Institute (CISPI) and be listed by NSF International.

1.6 CROSS AND INTER-CONNECTIONS

A. Refer to Section 220500.

1.7 DELIVERY, STORAGE AND HANDLING

A. Accept pipe and fittings on site in shipping containers with labeling in place. Inspect for damage.

PART 2 – PRODUCTS

2.1 PIPING, FITTINGS AND JOINTS

A. Hubless Cast Iron Soil Pipe and Fittings

1. Aboveground Soil, Waste, Vent and Rainwater Piping

a. Hubless Cast Iron Soil Pipe: No-hub pipe with Husky SD-4000 soil pipe coupling manufactured by Anaheim Foundry, 4-band clamp or Clamp-All Hi Torq 125 2-band clamp. Sealing gasket shall be neoprene in accordance with ASTM C564, CISPI 301-75. All pipe and fittings shall be of the same manufacturer- Charlotte Pipe and Foundry or approved equal.

B. Hub and Spigot Cast Iron Soil Pipe and Fittings

1. Below Ground Soil, Waste, Vent and Rainwater Piping

a. Asphaltum coated, service weight, cast iron pipe and fittings with resilient neoprene push-on joints, ASTM A74, ASTM C564-70. All pipe and fittings shall be of the same manufacturer- Charlotte Pipe and Foundry or approved equal.

b. Resilient Neoprene gaskets for 4” and smaller shall be lubricated as per manufacturer’s recommendations and for 5” and larger on adhesive type lubricant shall be used.

c. Wrap all piping with polyethylene sheeting.

2. Above Ground Soil, Waste, Vent and Rainwater Piping

a. Service weight cast iron pipe and fittings with resilient neoprene push-on joints. ASTM A74, ASTM C564-70. All pipe and fittings shall be of the same manufacturer- Charlotte Pipe and Foundry or approved equal.

C. Galvanized Steel Pipe

1. Aboveground Sewage Ejector and Sump Pump Discharge

a. Schedule 40 American Standard weight and manufacture galvanized steel pipe conforming to ASTM A120-74. Threads to be American pipe thread standard. Fittings shall be 125# galvanized screwed or joints shall be grooved with flexible couplings.

D. Polypropylene Piping

1. Above Ground Laboratory Waste and Vent (Smaller than 3”)

a. Schedule 40 fire retardant, ASTM D4101, mechanical joint system as manufactured by Orion, Enfield, G.F. Fuseal, Zurn or Asahi.

2. Above Ground Laboratory Waste and Vent (3” and Larger)

a. Schedule 40 flame retardant ASTM D4101, fusion joint system as manufactured by Orion, Enfield, G.F. Fuseal, Zurn or Asahi.

E. Polyvinylidene Fluoride Piping (PVDF)

1. Piping shall be Schedule 40 polyvinylidene fluoride conforming to ASTM F1673. System shall be installed in accordance with manufacturer’s recommendations. Pipe and fittings shall be chemically resistant PVDF conforming to ASTM D3222 and meet UL-723 requirements for flame spread rating less than 25 and smoke developed less than 50. Pipe and fittings shall be jointed by electro-fusion only. Provide mechanical joint couplings for transition between polypropylene and PVDF. George Fischer, Orion, Enfield or Asahi.

2.2 AIR VENTING AND DRAINAGE

A. Sanitary vent piping shall be graded so that airflow to the outside will be continuously upward and so that all low points will be drained.

PART 3 – EXECUTION

3.1 EXAMINATION / PREPARATION

A. Inspect site conditions in areas where piping and equipment will be installed and verify the impact of the installation before fabricating systems to be installed.

B. Notify the Architect immediately regarding any substantially different conditions than those shown in the Contract Documents.

3.2 SOIL, WASTE, VENT AND RAINWATER PIPING INSTALLATION

A. Pipes shall be plumb and parallel to building walls, beams, and columns. All horizontal lines are to be evenly pitched and properly secured with iron or steel hangers. A pitch of 1/4" per lineal foot shall be maintained on all soil, waste, and conductor lines, wherever possible. Where long runs of piping require less pitch due to space restrictions, a less pitch shall be allowed on main lines 4" and over in size, but in no event should any pipeline have a slope less than 1/8" per lineal foot.

B. No hub cast iron pipe couplings shall be installed as follows:

1. Place gasket on the end of the pipe and the stainless steel clamp assembly on the end of the other pipe.

2. Firmly seat the pipe ends against the integrally molded shoulder inside the neoprene gasket.

3. Slide the clamp assembly into position over the gasket and tighten the bands using a properly calibrated torque wrench, set at 60 inch pounds or as required by

manufacturer. Tighten the bands alternately and firmly, first the inner bands, then the outer bands.

4. Horizontal pipe and fittings 5” and larger shall be suitably braced to prevent horizontal movement. Bracing shall be provided at every branch connection or change of direction in accordance with manufacturer’s recommendations.

C. Service weight cast iron piping below ground shall be installed as follows:

1. Piping laid in trenches shall be continuously supported on undisturbed or compacted earth. Hand excavate at the bell to allow barrel to bear loading, not the bell.

2. Lay pipe to a straight line and uniform grade between point where changes in grade or alignment occur. Check line and grade frequently. Keep a stopper in the pipe end when pipe laying is not in progress. Commence at lowest point in the system and work upwards.

3. Carefully clean interior joint surfaces before joining sections. Firmly insert spigot end into bell completely.

4. Excavation and backfill are specified elsewhere. It shall be the plumbing subcontractor’s responsibility to insure that the backfill shall be carefully packed around the piping as it is being laid, and that the backfill operation is carried in 6" tamper layers to a point at least 12" above the piping.

D. All soil and waste pipes shall be carried out full size through the roof or connected to a common vent above the fixture and as shown on the drawings.

E. Threaded joints shall have American National taper screw thread with graphite and oil compound applied to the male threads.

F. Piping to be run straight and plumb and all offsets shall be made at an angle of not less than 45° and all threaded joints shall be as specified above.

G. Carefully lay out the work in advance so that the pipes will pass through the opening and permit the proper pitch to the pipelines. Due to the extensive system of ventilation and lighting systems, it will be necessary for all trades to properly coordinate their work with the work of other trades so as to avoid the necessity of taking down work installed without prior checking. Flush out and clean all existing soil and waste piping buried within the existing building prior to making any new connections.

H. Provide and connect cleanouts with brass caps and screws same size as pipe up to 6" and not less than 6" for larger piping at the ends of all branches on soil and waste piping, and in such other portions of the piping where run is over 50’-0". Underfloor cleanouts shall be installed as detailed.

I. Where stacks enter drains near walls or piers causing difficult access to end cleanouts, there shall be a vertical cleanout on the stack just above the floor with a 1/4 bend fitting at the foot of the stack.

J. Where such conditions occur in walls or partitions, the cleanout cover shall be accessible through an opening left in the wall and covered with the flush chrome plated brass plate or access panel securely fastened in place.

K. Brass cleanouts shall be solid nut construction.

L. Provide the Owner with wrench for removing cleanout plugs.

M. Where test tees are installed at the base of the stack, or on the stack, they may be used as a cleanout.

3.3 TESTING OF PIPING SYSTEMS

A. General

1. All piping systems shall be subjected to testing with water, gas or air as noted and shall hold tight at the pressure head stated for the time interval required without adding air or water. While any system is being tested, required head or pressure shall be maintained until all joints are inspected. All systems tested in the existing building shall be tested with air before water.

2. All tests shall be witnessed by the inspector having jurisdiction and the Architect/Engineer, with 48 hour notice given these authorities.

3. All equipment, material and labor required for testing any of the various systems or any part thereof shall be furnished by this Contractor.

B. Sanitary, Waste and Vent and Rainwater Systems: Water test shall be applied to drainage systems either in their entirety or in sections as required, after piping has been installed. If applied to the entire system, all openings in the piping system shall be tightly closed, except the highest opening, and the system filled with water to point of overflow. If the system is tested in sections, each opening shall be tightly closed except the highest opening in the section under test, and each section shall be filled with water but no section shall be tested with less than a 10’-0" head of water. In testing successive sections at least the upper 10’-0" of the next preceding section shall be tested so that no joint of piping in the building, except the uppermost 10’-0" of the system, shall be submitted to a test of less than a 10’-0" head of water. The water shall be kept in the system for at least (30) minutes before inspection starts.

1. Any points of the drainage systems to be tested with air instead of water shall be made by attaching an air compressor testing apparatus to any suitable opening and after closing all other inlets or outlets, forcing air into the systems until there is a uniform gauge pressure of 5 psi or sufficient to balance a 10" Hg high column. This pressure shall be held without the introduction of additional air for a period of at least (30) minutes.

C. Defective Work: If inspection or tests show defects, such defective work or material shall be replaced and inspection and tests shall be repeated. All repairs to piping shall be made with new materials. No caulking of screwed joints or holes will be acceptable.

3.4 FIXTURE ROUGHINGS

A. Install rough plumbing, including fixture carriers and supports, valves and water hammer arrestors within chase tolerances. Supply roughing through finish walls and at hose bibs and shower heads shall be secure and free of movement. Locate valves and water hammer arrestors within 12" of approved access panel location.

B. Align exposed waste and supply pipe roughings with fixture connections within 1" tolerance. Provide flush valves in alignment with the fixture, without vertical or horizontal offsets. Obtain fixture manufacturer roughing data sheets for recommended roughing dimensions.

C. Provide fixture templates for casework Contractor for counter mounted sinks and lavatories.

D. Secure fixture supports to floor slab construction with lag bolts and metal expansion shields to support at least 250 lbs. for (5) minutes.

E. Provide fixture rough-in piping connection sizes in accordance with the drawing schedule.

3.5 LABORATORY WASTE AND VENT PIPING INSTALLATION

A. Install laboratory waste and vent piping system entirely separate from other sanitary systems. The waste and vent piping shall be of the same material as specified. The system shall drain by gravity to the waste treatment system. Install, support and protect piping as directed by the product manufacturer. The installation shall allow for expansion and contraction. Plastic piping shall not be installed at temperatures lower than 60°F.

1. Horizontal piping 3" and smaller shall be pitched at 1/4" per foot. Piping 4" and larger shall pitch at 1/8" per foot.

2. Laboratory waste piping shall extend 10’-0" beyond the waste treatment system. Extend vent independent of other sanitary vent systems, full size to 24" above the roof in an area not utilized for fresh air intake.

B. Trenches shall be wide enough to assemble the pipe joints. The trench bottom shall be stable enough to support the complete barrel of the pipe. Holes shall be provided at each joint or coupling to allow for continuous support of the barrel along the trench.

C. Piping to be run straight and plumb and all offsets shall be made at an angle of not less than 45°.

D. Carefully lay out the work in advance so that the pipes will pass through the openings and permit the proper pitch to the pipelines.

E. Provide and connect cleanouts with caps and screws same size as pipe up to 6” and not less than 6” for larger piping at the ends of all branches on laboratory waste piping and in such other portions of the piping where run is over 50’-0”.

F. Where stacks enter drains near walls or piers causing difficult access to end cleanouts, there shall be a vertical cleanout on the stack just above the floor with a 1/4 bend fitting at the foot of the stack.

3.6 IDENTIFICATION OF SYSTEMS

A. Refer to Section 220500.

END OF SECTION 221130

SECTION 221140 - PLUMBING SPECIALTIES

PART 1 – GENERAL

1.1 WORK INCLUDED

A. The work shall include labor, materials, tools, equipment, transportation, insurance, temporary protection, supervision and incidental items essential for proper installation and operation, even though not specifically mentioned or indicated on the drawings but which are usually provided or are essential for proper installation of systems related to this Section, as indicated on the drawings and specified herein.

B. The specifications and drawings describe the minimum requirements that must be met for the installation of work as shown on the drawings and as specified hereinunder.

C. Shop drawings.

D. Field acceptance testing.

1.2 RELATED SECTIONS

A. Examine drawings and criteria sheets and other Sections of the Specifications for requirements which affect work under this Section whether or not such work is specifically mentioned in this Section.

1. Section 220500 – Basic Plumbing Materials and Methods
2. Section 221110 – Plumbing Valves
3. Section 221120 – Plumbing Distribution Piping
4. Section 221130 – Drainage and Vent Piping
5. Section 223000 – Plumbing Equipment
6. Section 224000 – Plumbing Fixtures
7. Section 226000 – Laboratory Plumbing Systems

1.3 REFERENCES

A. Applicable provisions of the following Codes and Trade Standard Publications shall apply to the work of this Section, and are hereby incorporated into, and made a part of the Contract Documents.

B. Material standards shall be as specified or detailed hereinafter and as follows:

1. Material standards shall be as specified or detailed hereinafter and as follows:

a. ANSI American National Standards Institute
b. ASME American Society of Mechanical Engineers
c. ASTM American Society of Testing Materials
d. ASTM B88-78: Wrought Copper Fittings
e. AWS American Welding Society
f. CS Commercial Standards, U.S. Dept. of Commerce

g. FM Factory Mutual
h. FS Federal Specification, U.S. Government
i. MSS Manufacturers Standardization Society of the Valve and Fittings Industry
j. UL Underwriters Laboratories, Inc.
k. OSHA Occupational Safety and Health Act
l. ASPE American Society of Plumbing Engineers

1.4 ALTERNATES

A. Refer to Section 10230 - ALTERNATES.

1.5 SUBMITTALS

A. Refer to Section 220500.

B. Submittals: The following documents shall be provided:

1. Insulation
2. Access panels
3. Water meter
4. Shock absorbers and trap primers
5. Pressure gauges
6. Thermometers
7. Hose bibbs
8. Wall hydrants
9. Backflow preventers and vacuum breakers
10. Floor drains and roof drains
11. Cleanouts
12. Flanges and unions
13. Sleeves and firestopping
14. Water filters
15. Vibration isolation and seismic restraints

1.6 QUALITY ASSURANCE

A. Refer to Section 01400 – QUALITY REQUIREMENTS.
B. All specialties used on domestic water shall have lead free wetted surfaces and shall be listed under NSF/ANSI 372.

PART 2 – PRODUCTS

2.1 FLANGES AND UNIONS

A. Flanges

1. Flanges shall be companion type, faced and drilled for not less than 125# steam working pressure complete with necessary adapter, and shall be of size and material of adjacent piping.

B. Unions

1. Provide union connections to fixtures and equipment. Union connections include compression fittings, grooved couplings, and flared fittings.

a. Unions on copper piping shall be bronze minimum working pressure of 200 psi.

b. Unions on steel and iron shall be ferrous ground joint brass to iron, rated for the working pressure of the system.

C. Dielectric Fittings

1. Provide separation between copper and ferrous piping systems such as nipples, unions or flanges. Components shall be equal to Watts or Clearflow.

D. Solder

1. Domestic water, waste and vent: 95-5 lead free, ASTM B32.

2.2 SLEEVES AND PLATES, ESCUTCHEONS, FIRESTOPPING AND SMOKESTOPPING

A. Refer to Section 220500.

2.3 ACCESS PANELS

A. Group together valves, traps, cleanouts, etc., concealed in suspended ceilings, walls and furred spaces to reduce the number of access panels, but all valves must be freely accessible for maintenance.

B. Furnish access panels of proper size to service all concealed traps, valves and cleanouts, but in no case less than 18" by 12" for valves, traps or cleanout, and 24" by 12" for (2) valves, traps or cleanouts, or more. Panels shall be of the proper type for material in which they occur to be furnished by this Contractor and turned over to the trade in which they occur for installation by the particular trade Contractor. The exact number of panels shall be determined by the number, location and grouping of traps, valves and cleanouts which must be accessible for servicing and maintaining the plumbing systems. Panels below ceilings shall be key operated.

C. Panels shall have flush doors with #14 USCG steel door and trim #16 USCG steel frame, metal wings for fitting into construction, concealed hinges, and screwdriver operated stainless steel cam lock. Panels shall be shop coated with (1) coat of zinc chromate primer. Valves above removable ceilings shall have tiles marked with tile clips by this Contractor for identification, properly labeled. Panels in toilet rooms

adjacent to urinals shall be Type 302, 18 gauge, stainless steel. All locks shall be universal with all building access panels locks.

2.4 INSULATION

A. Scope: The following piping, fittings, and valves shall be insulated:

1. All interior water piping.

2. Equipment, including heat exchangers and cold water chiller.

3. Aboveground horizontal rain water piping past the elbow, down the vertical, including drain bodies.

4. Water, rainwater waste piping in exterior furred ceiling spaces and overhangs.

5. All horizontal waste piping receiving cold water condensate.

B. Materials: The following materials are specified:

1. Pipe Insulation: Fiberglass similar to Owens Corning, Manville, Certain-Teed.

2. Fittings and Valves Insulation

a. Molded or fabricated fitting covers of equal thickness and identical in composition to adjacent pipe insulation, equal to Zeston pre-molded covers. At fittings and valves, the insulation vapor barrier shall be continuous and unbroken.

3. Heat Exchangers / Chillers

a. Fiberglass pipe insulation, blanket insulation on ends.

4. All materials, including vapor barrier jackets, adhesives, etc., shall be fire retardant.

C. Insulation Thickness

1. The piping, fittings, and valves shall be insulated with the following minimum thicknesses:

a. Hot water and circulation piping: 1" thick
b. Cold water piping: 1" thick
c. Rainwater Piping: 1" thick
d. Water heaters, storage tanks, heat exchangers: 2" thick
e. Frostproofed Piping – 3” insulation, dual temperature fire retardant jacket.

D. Finish

1. Concealed or Exposed: All service vapor barrier jacket (ASJ Fiberglass 24) on all conductor and water piping, except where flexible tubing insulation is used which requires no vapor barrier. Fittings shall be finished with pre-molded fitting covers. Except as noted insulate all exposed and concealed vertical and horizontal domestic water piping, and all exposed and concealed horizontal storm drainage piping.

E. Handicapped Lavatories

1. Truebro Handi Lav-Guard, Plumberex 2003W or Brocar Products Trapwrap #C-500R insulation kit, 3-piece interlocking for "P" trap assembly and 2-piece kit for water supplies shall be white flexible vinyl insulation secured with nylon fasteners supplied.

2.5 HOSE BIBBS AND WALL HYDRANTS

A. Hose Bibb for Toilet Rooms: Chicago 952 or T&S B0720, chrome plated brass, 3/4" with vacuum breaker and loose tee handle.

B. Hose Bibb in Mechanical Areas: JR Smith 5685-H, 3/4" inlet and threaded outlet, rough brass, vacuum breaker.

C. Wall Hydrants in Ground: Zurn Z-1360-HD or Wade 8602, encased, flush, non-freeze, ground box hydrant, 3/4" (or 1") inlet, heavy duty cover with identification.

D. Wall Hydrant: JR Smith 5509QT or Wade 8600,175 3/4", anti-siphon, non-freeze, loose key operation with bronze casing and “water” cast on cover.

2.6 BACKFLOW PREVENTERS

A. Acceptable Manufacturers and requirements

1. Provide units approved by the authorities having jurisdiction, the following specified type is utilized to establish quality.

2. This Subcontractor shall make application in the name of the Owner for the installation of the backflow preventers and pay any resultant fees.

B. Reduced Pressure Backflow Preventers

1. 2" and Smaller: Watts #LF009S-U-QT or approved equal bronze body, stainless steel check seats, unions, strainer and shutoff valves.

2. 2 1/2" and Larger: Watts #LF909W-S-OS&Y or approved equal bronze seats and stainless steel trim, flanged, strainer and shutoff valves.

3. Provide an air gap fitting and full size indirect waste to floor drain.

C. Double Check Valve Assembly

1. 2" and Smaller: Watts #007S-U-QT or approved equal bronze body, reducible seats, unions, strainer and shutoff valves.

2. 2 1/2" and Larger: Watts #709-S-OS&Y or approved equal epoxy coated, cast iron, bronze seats and stainless steel trim, flanged, strainer and shutoff valves.

D. Provide test kit and spare parts for each type of installed unit. Provide inlet and outlet pressure gauges on units. Test kits shall be by the supplied manufacturer of units.

E. Pressure Vacuum Breaker

1. Finished areas and locations unless otherwise noted: Watts #LF800MCQT, Conbraco #4V-500 or approved equal compact, chrome plated with integral shutoff valves.

2. Mechanical areas and concealed locations: Watts #LF800M4QT, Conbraco #4V-500 or approved equal rough brass, replaceable seats with shutoff valves.

F. Vacuum Breaker

1. For Hot or Cold Water: Watts #LF288A, Conbraco #38-100 or approved equal bronze, atmospheric vent, clean plated in exposed, finished areas.

G. Ice Maker

1. Provide dual check in-line backflow preventer suitable for continuous pressure application. Watts LFN9-CD, chrome plated and in-field testable.

2.7 LEAK DETECTION

A. Provide at all main service RPZ devices and where shown on plans.

B. Dual power AC adapter and 9V battery backup.

C. Wireless and wired sensor options.

D. Audible/visual alarm with receiver accepts 16 wireless sensors.

E. QMI Water Guardian or approved equal.

F. Locate main alarm panel in security office and wireless sensors at each RPZ drain.

2.8 WATER FILTERS

A. 1,500 gallon capacity.

B. NSF certified.

C. ELKAY water sentry VII Model No. EWF-172, Brassmaster or approved equal.

D. Provide 2 replacement cartridges per filter model 51299-C.

E. Install at pantry sinks per detail.

2.9 TRAP PRIMERS AND WATER HAMMER ARRESTORS

A. Zurn Z-1700 Series, Wade Shokstop or Sioux Chief 650 series - stainless steel "shoktrols" shall be installed on water supply lines to flush valves and to plumbing connected equipment equipped with fast acting valves to control water hammer. They shall be sized and selected in accordance with PDI Standard WH201 with access through approved access panels. Examples of such locations are as follows:

1. Flushometer valves
2. Self-closing and metering faucets
3. Prior to all pressure reducing valves
4. Prior to all in-line solenoid valves
5. Emergency showers
6. Sterilizer water supplies
7. Autoclaves
8. Glasswashers, cagewashers and similar equipment
9. Top of all risers

B. Trap Primers

1. Individual fixtures shall be primed by Precision Plumbing products, Inc., model Prime Rite, or approved equal. Device shall be machined brass with no springs or diaphragms. Mount 12” above trap to be primed.

2. Multiple fixtures shall be primed by Precision Plumbing Products, Model PT-4 through 30 and rated for quantity of traps to be served. The priming manifold shall be capable of supplying 2 oz. of water per trap supply at 20 psig every 24 hours. The device shall be factory assembled and prepiped complete with ball valve, water hammer arrestor, copper barrel hammer arrestor, copper barrel with piston, solenoid valve and 1/2” trap primer connections. Electronic connections include single point 120V, manual override switch breaker, timer with relay. Unit shall be factory tested and supplied in a wall mounted 16 gauge steel cabinet.

3. Install trap primers at all drains where trap seal is subject to evaporation including mechanical room drains that do not receive indirect waste.

2.10 DRAINAGE SPECIALTIES

A. Before setting any drains, cleanouts or wall plates, obtain from the General Contractor the exact information relative to the finished grades of the top of the drains, equipment locations and partition locations. All drainage specialties shall be of the size noted on

the drawings and shall be equal to the figure numbers scheduled below. Drainage specialties may be JR Smith Company, Wade or Zurn.

B. Cleanouts

1. Cleanouts shall be furnished and installed at all locations required by applicable Codes, in accessible locations, at bottoms of soil and waste stacks, and other locations shown on the drawings and at each change of direction. All cleanouts shall be brought up to finished floor. Outlets shall be caulked or no hub type.

2. Cleanouts occurring in floors finished with quarry, ceramic tile, brick or granite shall be equipped with flush scoriated round bronze as selected by Architect to coordinate with color of flooring covers with round frames, equal to J.R. Smith #4046 or Wade 6000,STD,1,75. Covers shall be adjustable in height.

3. Cleanouts occurring in resilient tile floors or carpeted areas shall be equipped with flush round metal covers with frames, equal to J.R. Smith #4146 for tile and #4026 for carpet or Wade 6000,T,1,75, with covers recessed to receive tile or carpet. Covers shall have adjustable height.

4. Cleanouts occurring in floors finished with plain concrete shall be equipped with heavy duty flush scoriated round cast iron covers with round frame equal to J.R. Smith #4226 or Wade 6000,Z,75. Covers shall be adjustable in height.

5. Where cleanouts occur under the floors in unexcavated areas, they shall be brought up flush with the finish floor and fitted with a cover equal to J.R. Smith #4226 series or Wade 6000,Z,75, cast iron top.

6. Cleanouts occurring in floors protected with membrane waterproofing shall be same as above, except with integral clamping collar.

7. Cleanouts occurring in walls shall be equipped with flush smooth white metal covers, with 10 inch by 10 inch openings in square frames having anchoring lugs, equal to J.R. Smith #4735 or Wade 8480,S.

8. All otherwise exposed or accessible cleanouts shall be equal to J.R. Smith #4420 or #4531 or Wade 8550 / 8480R or Wade 8590 / 8480R as required to suit the conditions at each point of application.

9. Extension pieces and bodies of cleanouts shall be of cast iron and arranged to suit each condition of application.

10. All metal specified above shall be solid "nickel-bronze" having high nickel content, appearance of satin chrome, and corrosion and wear resistance qualities greater than bronze.

11. Cleanouts shall be the full size of the pipelines to which they are directly connected, but need not be larger than 4 inches for pipe lines up to 10 inches, and shall be at least 6 inches for pipe lines 10 inches and up.

12. Cleanouts occurring in floors finished with plain concrete shall be equipped with heavy duty flush scoriated round cast iron covers with round frame equal to J.R. Smith #4340 or Wade 6000,Z,75. Covers shall be adjustable in height.

13. Grade cleanouts shall be Zurn #1456 or Wade 6000,STD,1,75 with inside caulk mounted in cast iron 12" square frame and cover LeBaron #S512.

C. Floor Drains (FD)

1. All floor drains shall be the product of one manufacturer such as Zurn Industries, J.R. Smith, or Wade.

2. Provide "deep seal" traps for all floor drains, of same material as piping systems connected thereto.

3. Provide ASSE 1072-2007 Neoprene Rubber type Diaphragm & Sealing Gasket similar to SureSeal Manufacturing on all floor drains.

4. Drains located in waterproofed floors of composition materials or of other kinds, shall be fitted with all required flanges, clamping devices and trim required to assure watertight conditions, and they shall be made watertight. Provide all other miscellaneous devices, as required, for a complete installation as approved by Architect.

a. Type A: Toilet Rooms

1) Zurn Z-415 or Wade 1100,FC,1 floor and shower drain, dura-coated cast iron body with bottom outlet, combination invertible membrane clamp and adjustable collar with Type H polished, nickel bronze strainer with flashing clamp device.

b. Type B: Mechanical Rooms

1) Zurn Z-541 or Wade 1210,27, 12" diameter top drain, dura-coated cast iron body with bottom outlet, seepage pan and combination membrane flushing clamp and frame for anti-tilt heavy duty slotted grate with suspended sediment bucket.

c. Type C: Environmental and Cold Rooms

1) Zurn Z-415 or Wade 1100,STD,1 w/ EG8,1 floor drain, dura-coated cast iron body with bottom outlet, combination invertible membrane clamp and adjustable collar with Type B polished nickel bronze strainer with Z-329 7" oval funnel converting assembly.

d. Type D: Typical Lab Floors Glassware Washers and Sterilizers

1) Zurn Z1750-4 or Wade 9100,9,SS, 12" x 12" sani-floor receptor 6" sump depth, 14 gauge, all Type 304 (CF8) stainless steel light duty sani-floor receptor with non-tile, loose set full grate with 3" square center opening and anti-splash interior dome strainer.

e. Type E: Ice Machines

1) Zurn Z-415 or Wade 1100,WW2x7 floor drain, dura-coated cast iron body with bottom outlet, combination invertible membrane clamp and adjustable collar with Type E polished, nickel bronze strainer with 4" diameter funnel.

D. Roof Drains (RD)

1. All roof drains shall be the product of one manufacturer such as Zurn Industries, J.R. Smith, or Wade.

a. Type A: Zurn ZA-100-C-VP, or Wade 3000,5,46,53 15" diameter roof drain, dura-coated cast iron body with combination membrane flashing clamp/gravel guard and low silhouette aluminum dome, supplied with underdeck clamp and vandalproof secured top.

b. Type C: Zurn ZA-161 or Wade 3270, 3" x 10" oblique scupper drain, plain bronze body with gasket, plain bronze grate with integral membrane.

c. Type B: (Overflow): J.R. Smith 1045C 15” diameter roof drain with fixed PVC standpipe, adjustable extension, duco-cast iron body, flashing clamp, gravel stop, polyethylene dome. Provide sump receiver, underdeck clamp, and vandal proof dome.

2. Provide Zurn ARB-190 or Wade 3900 vertical expansion joint at every drain location where the drain outlet piping connects directly to a vertical leader or when the horizontal offset is less than 10'.

E. Area Drains (AD)

1. All area drains shall be the product of one manufacturer such as Zurn Industries, J.R. Smith, or Wade, Josam.

a. Type A: Zurn ZN-415 or Wade 1100,G8,1 area drain, dura-coated cast iron body with bottom outlet, combination invertible membrane clamp and adjustable collar with Type S 8" x 8" polished nickel bronze square strainer and vandalproof secured top.

b. Drain Inlet

1) Zurn ZB-154-VP-G or Wade 3100,5,39, 11" square with heel proof grate, secured, vandal-proof, galvanized body.

2.11 FRESH AIR INLETS

A. Exposed type:

1. Gooseneck type, cast iron.

2. Locate and size as shown on drawings.

B. Flush type:

1. Perforated bronze plate with pipe clamp finish as specified by Architect.

2. J.R. Smith Fig. No. 9005 or Wade 3880P, size as noted.

2.12 THERMOMETERS

A. Thermometers shall be adjustable angle design of the separable well type and shall have a 9" cast aluminum case. The scale shall be white with black figures and graduations embossed on the scale. The column shall be filled with red reading mercury. Thermometers shall be manufactured by Trerice Co. or Taylor Instrument.

B. Thermometers shall be furnished complete with all necessary sockets, wells, connectors and accessories required for installation suitable for the service in which installed. Extension necks shall be furnished for insulated piping.

C. Thermometers shall be furnished with the temperature ranges of 30° to 100°F for cold water, and of 30° to 240°F for hot water systems.

2.13 PRESSURE GAUGES

A. Pressure gauges shall have brass movement, aluminum case, double strength clear glass window with black embossed figures and graduations on a white dial face, with 1% accuracy of scale range. Gauges shall be manufactured by Trerice Co., Taylor Instrument, or Marshaltown Mfg.

B. Gauges shall be furnished with snubbers and needle valve shutoff valves.

C. Gauges shall be 4 1/2" diameter furnished with ranges that will locate the intended pressure at the point of application approximately midpoint on the range scale. Gauges for natural gas, vacuum and similar low pressure systems shall be gauges specifically designed for low pressure applications.

2.14 WATER METERS

A. Meter shall be displacement type with cast iron casing and bronze trim. Meter shall consist of standard trimmings including an all bronze bypass meter with isolation valves, bronze and stainless steel gears and spindles, strainer and flanged ends. Meter

shall be fitted with OS&Y gate valves, cast iron body and bronze trim. Meter shall meet all requirements of the local Water Department and shall be equipped with dry contacts for remote reading on the Building Automation System.

2.15 BUILDING AUTOMATION SYSTEM

A. The building automation system shall be furnished and installed under another Section of these specifications. This Subcontractor shall provide the tees, pipe wells, valves, and caps to allow the connection from the BAS system to the plumbing points required. The pH probes, moisture content meter and resistivity probe shall be provided for BAS tie-in. The following table itemizes the equipment and location of the type of device necessary to connect to the BAS system.

Service or Equipment	**Pressure**	**Temperature**	**Flow**	**Trouble**	**Location**
Water meter			X		Basement
Water heaters		X			Basement
Water booster pumps	X			X	Basement
Vacuum pumps	X			X	Basement
Air compressor	X			X	Basement
RO/DI	X		X	X	Basement
Ejectors				X	Basement

2.16 VIBRATION ISOLATION AND SEISMIC RESTRAINTS

A. See Section 22 05 48.

PART 3 – EXECUTION

3.1 BACKFLOW PREVENTERS AND APPROVALS

A. Potable water piping outlets and connections to equipment shall be protected with an airgap or backflow preventer approved by the Department of Environmental Protection Agency or Board of Health. All installations, clearances and equipment shall be in strict accordance with State regulations.

B. Submit plans and obtain approval for each reduced pressure backflow preventer installation. Copies of approvals shall form a portion of the record drawings.

C. All reduced pressure backflow preventers shall be installed with inlet and outlet gauges, strainer and indirect waste through an airgap to a floor drain or receiver.

3.2 INSULATION INSTALLATION

A. Insulation shall be installed in accordance/compliance with the manufacturer's application recommendations by person(s) specializing in this work. Insulation not

installed in an acceptable manner will be replaced by this Contractor at no additional cost.

B. All piping systems shall be cleaned, tested and approved prior to installing insulation. Provide continuous vapor barrier on cold water, rainwater, indirect waste and all insulated systems where condensation could occur.

C. Piping: Pipe insulation where vapor barrier jacket is required, shall be installed with vapor barrier jackets drawn tight and firmly sealed to assure a positive vaporseal. End joints shall be covered with 4" wide butt strips of material identical to vapor barrier jackets, and they shall be drawn tight and securely sealed. The use of staples, bands, etc., to secure insulation where vapor barrier jacket is required will not be acceptable. Pipe insulation where no vapor barrier is required shall be secured with flare type staples.

D. Fitting and Valves: Molded insulation on fittings and valves bodies shall be same thickness as adjacent covering and finished neatly to match the adjacent pipe insulation.

E. Hangers and Saddles

1. Insulation inserts shall be installed at points of hanger support. Insulation inserts shall be either 180° or 260° and not less than 18" in length. The entire insert shall be covered with a vapor barrier facing of the same appearance and quality as the facing on the adjacent covering.

2. Insulation at hangers, anchors and supports shall be neatly cut and fitted.

3.3 IDENTIFICATION OF SYSTEMS

A. Refer to Section 220500.

END OF SECTION 221140

SECTION 223000 - PLUMBING EQUIPMENT

PART 1 – GENERAL

1.1 WORK INCLUDED

A. The work shall include labor, materials, tools, equipment, transportation, insurance, temporary protection, supervision and incidental items essential for proper installation and operation, even though not specifically mentioned or indicated on the drawings but which are usually provided or are essential for proper installation of systems related to this Section, as indicated on the drawings and specified herein.

B. The specifications and drawings describe the minimum requirements that must be met for the installation of work as shown on the drawings and as specified hereinunder.

C. Shop drawings.

D. Field acceptance testing.

1.2 RELATED SECTIONS

A. Examine drawings and criteria sheets and other Section of the Specifications for requirements which affect work under this Section whether or not such work is specifically mentioned in this Section.

1. Section 220500 – Basic Plumbing Materials and Methods
2. Section 220510 – Underground Plumbing
3. Section 220529 – Hangers and Supports
4. Section 220548 – Plumbing Vibration Controls and Seismic Restraints
5. Section 220553 – Plumbing Identification
6. Section 220584 – Through Penetration Firestop Systems
7. Section 221110 – Plumbing Valves
8. Section 221120 – Plumbing Distribution Piping
9. Section 221130 – Drainage and Vent Piping
10. Section 221140 – Plumbing Specialties
11. Section 224000 – Plumbing Fixtures
12. Section 226000 – Laboratory Plumbing Systems

1.3 REFERENCES

A. Applicable provisions of the following Codes and Trade Standard Publications shall apply to the work of this Section, and are hereby incorporated into, and made a part of the Contract Documents.

B. Material standards shall be as specified or detailed hereinafter and as follows:

1. ANSI American National Standards Institute
2. ASME American Society of Mechanical Engineers
3. ASTM American Society of Testing Materials

		ASTM B88-78: Wrought Copper Fittings
4.	AWS	American Welding Society
5.	CS	Commercial Standards, U.S. Dept. of Commerce
6.	FM	Factory Mutual
7.	FS	Federal Specification, U.S. Government
8.	MSS	Manufacturers Standardization Society of the Valve and Fittings Industry
9.	UL	Underwriters Laboratories, Inc.
10.	OSHA	Occupational Safety and Health Act
11.	ASPE	American Society of Plumbing Engineers

1.4 ALTERNATES

A. Refer to Section 220500.

1.5 SUBMITTALS

A. Refer to Section 220500.

B. Submittals: The following documents shall be provided:

1. Water booster pumps
2. Sewage ejectors
3. Sump pumps
4. Water heaters
5. Hot water circulators
6. Elevator sump pumps

1.6 QUALITY ASSURANCE

A. Manufacturer: Company specializing in manufacturing plumbing specialties specified in this section, with documented experience.

PART 2 – PRODUCTS

2.1 INSTANTANEOUS STEAM WATER HEATERS

A. Provide domestic water heaters by AERCO, Patterson Kelly, Armstrong, as specified by PVI Industries, Inc. All units shall be factory insulated, jacketed and painted. All fitting connections shall be copper. The heaters shall be completely packaged; heat loss shall comply with ASHRAE 90 (1982) standards. Start-up of equipment shall be by factory trained manufacturer's personnel. The final installation shall comply with all authorities having jurisdiction. Nameplate data shall be marked accordingly and clearly visible from the front of the unit.

B. SWH-1 and SWH-2 (potable): Provide Duplex water heating system consisting of one (1) **CCXT-120-40-15**~~CSXT-120-40-15~~ water heater skid with two heaters manufactured by PVI Industries. Each water heater shall provide 120°F water @ 20 gpm when supplied with 850 lbs of 15 psi saturated steam. Provide subcooling heat exchange (AIC#LA14-40).

C. SWH-3 and SWH-4 (non-potable): Provide Duplex water heating system consisting of one (1) **CCXT-140-50-15**~~CSXT-140-50-15~~ water heaters manufactured by PVI Industries. Each water heater shall provide 140°F water @ 25 gpm when supplied with 1325 lbs of 15 psi saturated steam. Provide subcooling heat exchange (AIC#LA14-40).

D. Each water heating system shall include the following:

1. Water heaters shall operate with 0 – 15 psi steam pressure to the heat exchanger without a modulating steam control valve or other controls.

   a. A steam shut off valve(s) and inlet piping
   b. Y-strainer with blowdown valve (for field installation)
   c. Duplex integral hot-water circulating pumps

2. The heat exchanger shall be constructed from ~~316L stainless steel with full passivation~~ **copper**. The heat exchanger shall be vertical in design for optimum space utilization. The steam shall pass through spiral ~~corrugated stainless steel~~ **copper** tubes and water through the ~~stainless steel~~ **copper** shell in a counterflow direction, promoting turbulent flow to maximize heat transfer efficiency and reduce sediment build-up/scale formation on the heat transfer surfaces. No pull space clearance shall be necessary for heat exchanger cleaning.

   a. The heat exchanger shall be of ~~single~~ **double** wall construction rated for 150-psig/366°F design on shell and tube sides. The heat exchanger shall be certified to ASME section VIII and code stamp certified. A Float and Thermostatic trap, sized for 1.5X steam flow shall be used to collect and discharge condensate as required.

3. A non-adjustable self-contained temperature control system shall be utilized to provide the specified outlet water temperature within +- 5° accuracy to the specified maximum gpm and during recirculation-only periods. No temperature drop during recirculation periods is permitted. System pressure loss shall not exceed 9 psi. Electro-mechanical over temperature shutdown protection shall be provided to stop hot water flow from exiting the water heater if over temperature flow in sensed. Cold-water flow shall be permitted through the system in shutdown conditions.

4. Temperature and water pressure gauge at the outlet shall be provided.

5. A differential pressure monitoring system to interrupt steam and hot water flow when steam and water pressure approach equalization is provided

6. Water piping shall be constructed from non-ferrous piping with female NPT connections. A 150-psi pressure relief valve shall be located on the heat exchanger outlet piping. Heat exchanger water- side access ports shall be provided for on-skid inspection and cleaning.

7. The water heater will be factory packaged requiring site hookup to utilities only. Start up instructions shall be provided with the unit. An authorized PVI

representative shall perform start-up. A copy of the start up report shall be completed by the installer and returned to PVI Industries to meet warranty requirements

8. ~~CSX/CSXT~~ **CCX/CCXT** heat exchanger shall carry a one year warranty against failure due to thermal shock, mechanical failure, corrosion or erosion. All water heater system components shall have a one-year warranty. Warranty period begins at start-up or eighteen months from date of purchase, whichever comes first.

9. Provide 2 inches of insulation on entire heat exchanger system and equipment including, but not limited to, the steam valve, heat exchanger, mixing valves and all piping in order to assure an anti-scald installation.

2.2 THERMAL EXPANSION TANKS

A. Provide pre-charged thermal expansion absorbers designed and constructed per ASME Code, Section VIII. Expansion absorbers shall have pre-charged air chamber, steel outer shell, rigid polypropylene liner, heavy duty butyl diaphragm and stainless steel connection. Expansion tank shall be floor mounted on a 4 inch housekeeping pad.

B. Expansion tank sizes shall be as manufactured by Amtrol, Inc. or equal by A.O. Smith and shall be in accordance with the following:

Expansion Tank No.	**Model No.**	**Total Volume in Gallons**	**Connection Size**
ET-1	ST-60-V-C	25	3/4”

2.3 DOMESTIC WATER PRESSURE BOOSTER

A. Contractor to furnish and install a prefabricated and tested water pressure triplex pump booster system as designed and manufactured by Syncroflo, Inc., Tiger Flow or Canaris rated at total capacity of 294 gpm with, and a boost pressure of 70 psi. The system described is using Syncroflo as the minimum standard of quality. System shall be provided with 6"Type "L" copper tubing discharge and suction headers. Any and all deviations from these specifications must be acknowledged in writing.

B. Vertical Multi-Stage Pumps

1. Pumps shall be industrial variable speed vertical multi-stage diffuser pumps with stainless steel shafts, water lubricated bronze radial bearings, mixed flow balanced bronze impellers and cast iron bowls with glass lined diffusers. The pump barrels shall have a corrosion inhibiting lining and a 3" clean-out access. The discharge head shall be flanged with continuous bypass for low seal pressure. the mechanical seal shall be sleeve mounted and replaceable without removing the motor, disassembling the pump, or disturbing piping connections.

2. Pumps shall be driven by vertical hollow shaft motors. Each motor shall meet NEMA standards be energy efficient type and operate within the nameplate

horsepower at any point on the pump curve. Include a hex type shaft coupling and a steady bushing for each motor.

3. Pumps shall be Grundfos Model CRE-15-5, 10 HP, 3500 RPM at 162 Feet head, 460 V, 3 phase.

C. Lag Pump Sequencing

1. Flow sequencing shall be controlled by a flow sensor. The flow sensor shall be provided with a panel mounted visual indicator for continuous readout in GMP, include necessary pump sequencing set points and shall be readily field adjustable to accommodate changing demand conditions.

2. The small lead pump is to run during low-flow periods and constantly prior to the second lag pump operation is initiated. The first lag pump is to operate when the building's requirements have surpassed the small lead pumps capacity.

0 to 98 GPM	Lead Pump
98-196 GPM	First Lag Pump and Lead Pump
196 to 264 GPM	All Pumps

D. Lead Pump Shut-Down

1. Provide a factory precharged, ASME code and NB stamped and labeled HydroCumulator tank. Construction features shall include an air fill valve, an air pressure gauge, a drain valve, and a replaceable FDA approved flexible membrane to separate air and water. No water shall come in contact with the metal walls of the tank. In addition the HydroCumulator tank shall be bottom fed and capable of 100% draw down. Tank shall be shipped pre-charged to the proper design conditions.

2. Provide a pressure switch, a MaxiStore flow switch, and a time delay relay to automatically control lead pump on-off operation. These controls shall operate in such a way as to prevent high flow rate shutdowns and lead pump short cycling while maximizing the amount of stored water available from the HydroCumulator.

E. HydroCumulator Location

1. The tank shall be 100 gallons rated for 125 psi, remote mounted at the top of building and located as close to water riser as possible. Provide a 2" isolation valve before tank. Provide a gauge and 3/4" hose bib on water connection to tank.

F. Flow Sensor:

1. Flow Sensor shall be accurate within 1.0% of full scale and repeatable within .3%. Flow sensor shall detect flow to ½ FPS when flow rate is decreasing. Flow sensor shall have 20 ft of two conductor shielded cable. The flow sensor shall be shipped loose and installed and wired to the control by others. The flow sensor

shall be installed with at least 10 upstream and 5 downstream diameters of straight uninterrupted pipe

G. Check Valves:

1. Constant system pressure shall have check valve on each pump discharge line. Valve body shall be cast iron with epoxy coated cover. The valve body shall be suitable for operation at maximum pump pressure plus maximum suction pressure

H. Low Flow Operation:

1. Provide pressure switch and flow sensor to automatically control lead pump operation. These controls shall prevent lead pump short-cycling and proper staging of the lag pump.

I. Pressure Transmitter:

1. A digital pressure transmitter shall be connected to the system header. The transmitter shall have 1.0% accuracy, stainless steel wetted parts and a waterproof enclosure. Transmitter shall be capable of withstanding over pressurization of double its range. Pump system shall be capable of calibrating the zero setting in the field.

J. Variable Frequency Drives:

1. Each pump shall have its own Siemens variable frequency drive with the following features:

a. The drive shall be a voltage source IBGT power transistor based inverter - PWM Type. The inverter shall use a high carrier frequency to reduce drive and motor noise. 2kHz – 16 kHz (up to 100 HP)- 430 & 440.

b. Drive shall be capable of operating in an ambient temperature between 15 degrees F and 100 degrees F and a line voltage variation of less than 10 percent 14 degrees F and 104 degrees F & 95% Relative Humidity (non-condensing). Self protection features shall include: under voltage and over voltage protection, current overload protection, short circuit protection, power failure protection, ground fault protection, and over-temperature protection.

c. Inputs and outputs for the VFD to include six fully programmable isolated digital inputs with the option for a 7th and 8th, Both scalable analog inputs can also be used as the 7th and 8th digital input, Two fully programmable analog outputs and three fully programmable relay outputs. - 430 & 440

d. A four-digit LED readout shall be provided to indicate the following: drive enabled, output frequency, and all VFD fault conditions.

e. The drive shall be capable of automatically restarting after any of the following: overload over-voltage, converter over-current, inverter over-current, or power failure.

f. The following drive parameters shall be user adjustable: acceleration speed (1 to 300 seconds), deceleration speed (1 to 300 seconds), minimum speed, and maximum speed.

g. Provide CD ROM to include, but not limited to, the following items. Printed manuals, if required, are to be specified in the motor project list.

h. Operation & maintenance manual

i. Start-up & programming software

j. Option descriptions and drawings

k. Harmonics software

K. Instrumentation and Emergency Controls

1. Temperature relief valve shall be mounted in the discharge head or seal bypass line for fast, accurate response.

2. Individual 4½" ASA grade A pressure gauges for each pump, system, and suction pressures.

3. All pressure sensors shall be control panel mounted.

4. Pressure gauges shall be mounted on a gauge board with 5 sides enclosed, located adjacent to the control panel.

5. Provide pressure sensors for high system pressure, low system pressure, and low suction pressure conditions

L. Paint & Finish

1. The entire station, with the exception of the control panel and the motors, shall be painted as follows.

a. The station shall be cleaned and painted with a multipart coating system with a total dry-film thickness of not less than 6 mils.
b. One coat of modified alkyd, rust inhibiting, industrial enamel primer shall be applied to a dry film thickness of not less than 2 mils.
c. Two coats of a two part, semi gloss, acrylic, aliphatic, urethane, enamel finish shall be applied to a dry-film thickness of not less than 4 mils.

M. System Operation

1. The lead pump will start on a low system pressure condition. The lead pump shall run continuously if selected by the operator. The controller shall take flow readings from an insertion type paddlewheel flow sensor. The lag pumps will sequence based on either high flow rate or a combination of low system pressure and high VFD speed. Flow rate sequencing will start the lag pump(s) as the capacity of the running pump(s) is exceeded. Likewise, low system pressure sequencing augmented with high VFD speed ensures that the running pumps are at full capacity before starting the lag pump(s). System pressure is continuously maintained by automatically adjusting the speed of the pumps.

2. Automatic sequencing shall include sequence shifting that adjusts the pump sequence when any pump is disabled, successive and 24 hour alternation of equal capacity pumps, pump overlap during 24-hour alternation, lag pump exerciser function, special sequencing to reduce surges during power restoration, sequential sequencing of lag pumps, minimum run and stop delay timer for each pump, field adjustable set points for flow, pressure, and time settings.

3. The controller continuously monitors the pressure of the system with the system pressure transmitter and the flow rate with the paddle wheel flow sensor. In automatic operation, the controller will signal the appropriate pump(s) to start or stop based upon the sequencing. It should be noted that all pumps follow the same speed control signal produced by the controller. Upon starting, the pumps will slowly ramp up to the appropriate speed. Once this startup sequence is complete, the pumps will always run at whatever speed is required to maintain the set point pressure. All pumps are protected by minimum run timers to prevent unnecessary cycling. The pumps will stop in the reverse order from which they started.

N. System Control Panel:

1. Furnish a single compartment SyncroFlo NEMA 1 power and control panel. Enclosure and base pan shall be steel and coated with industrial grade enamel. It shall house all control components and include control power transformer with control power light, pulsating audiovisual alarm system, and other necessary controls. Include fused disconnect switches or motor starter protectors with external operating handles, and 3-leg overload protection, pump run lights, and hand-off-auto selector switches for each pump. All of the electrical components shall be factory wired and tested by the pump system manufacturer in accordance with the provisions of the National Electrical Code. All control wires shall be individually numbered and each component shall be labeled accordingly. All internal wiring shall be copper stranded, A.W.G. with a minimum insulation of 90o C. Pump manufacturer shall certify the complete power and control assembly with the UL mark for Industrial Control panels.

2. Panel shall have components configured to allow Emergency power to operate any of 2 pumps. Control panel shall have additional dry contacts to accept input from BAS system.

3. The control panel shall display the following:

a. Control Power Indicating Light: This white light provides indication of 120 V control power for the entire system. The system will not operate without control power.

b. Pump Running Lights: Each pump is indicated as running by a light located above its selector switch.

c. Alarm Condition Light: A red alarm condition light is located on the control panel door. This light will illuminate upon activation of any of the alarm systems.

d. Alarm Silence/Reset Push Button: Push once to silence the alarm horn, wait five seconds and push a second time to reset the system from alarm mode back to normal automatic operation. The system will not reset unless the original cause of the alarm(s) has been corrected or removed. This button can also be used to defeat the minimum run time of the pumps and allow the lag pumps to turn off if they are not required to be running. This is a useful feature when testing or monitoring the system.

e. Alarm Horn: The horn sounds when an alarm condition occurs. It has a medium volume that is not adjustable. Its piercing sound can be easily heard in mechanical rooms.

O. Operator Controls:

1. Pump Selector Switch shall be provided on the control panel. The switch shall have following positions:

a. HAND: Use for manual operation only - to start up, restart and reset or test each pump. No pump should run in this position without supervision.

b. OFF: Pump will not run at all. Use during start up, restart and reset, or when a pump is down for service.

c. AUTO: Automatic position for each pump, which allows the controller to have full control over the pumps operation,

P. Programmable Controller:

1. Provide Mitsubishi UL listed programmable controller to control all pump starts and stops and indicate alarm conditions. The controller shall have the following features:

a. Nonvolatile EEPROM memory to prevent program loss due to power failure

b. Program cartridge or loader which allows program changes to be made by the factory and sent to the field for simple loading by the operator

c. Input and output "on" status lights for ease of monitoring

d. Controller shall be designed for use in locations where electromagnetic noise, voltage spikes, 32 - 130o temperature, 35 - 85% humidity, and mechanical shock within the range certified by JIS 0912 exist.

2. The controller features both non-adjustable and adjustable timers. The adjustable timers can be changed using the OIT.

3. Status LEDs: The status of the PC can be determined by observing the LEDs on the face of the PC. Key LED displays are as follows; a.) POWER, b.) RUN, c.) PROG-E / CPU-E, d.) IN / OUT.

4. Program Changes: The system manufacturer will do all programming for the PC. Every phase of the program will have been tested with the entire machine at the factory. Final adjustments are made at start-up by factory-trained personnel. If a program change is required, it will be made by the system manufacturer and transmitted to the field via a program loader or chip. The system manufacturer shall keep a copy of the program at the factory so that any changes can be made and transmitted immediately.

5. Maintenance: The PC shall require no routine maintenance. The program is stored on an EEPROM chip so that it will not be lost due to loss of power no matter how long the power is off.

Q. Operator Interface Terminal (OIT) (Data Access Console)

1. The data access console shall be by MAPLE SYSTEMS and flush mounted in the door of the control panel. The console shall include an alphanumeric keypad with audible feedback. The following data shall be accessible through the operator interface:

a. One-touch access to display system status including flow rate (GPM), current pressure, and set point the current speed of the pumps (%), the control method of speed control.

b. One-touch access to Usage History, which may be reset. Usage History shall record the maximum instantaneous flow, along with the date and time.

c. A Setup Menu system for adjusting setpoints. Display and adjust flow and pressure set points and time delays. Set pump alternation to manual or automatic. Set the hour of the day for automatic alternation. Restore all factory defaults. Protect adjustable settings with a password.

d. One-touch access to an Alarm History of the past 200 alarms. Each log shall include individual pump run status, VFD mode, flow, and alarm type.

e. One-touch access to an Alarm List of all possible alarms and their current status. The set points described below are adjustable through the operator interface terminal (OIT).

2. Restart Sequencing: Anytime the system is reset from a complete alarm shutdown or after power is restored, pump sequencing is modified to help prevent water hammer. The lead pump will start on low system pressure as normal. However, there is a 10-second interval before each lag pump may start.

3. Lead Pump Sequencing: Through the OIT, the operator may choose to enable lead pump shut down or have the lead pump run continuously. If enabled, the lead pump will stop if no other pump is running, the lead pump minimum run time has expired, system flow rate is less than 10 gpm, and either of the following two conditions is met:

   a. System pressure is within one pound of the set point and VFD speed is less than the lead pump stop speed set point OR (2) High suction pressure occurs (as measured by either a pressure transmitter or switch),

   b. The lead pump will start when system pressure drops several pounds below the desired system pressure (system pressure set point - pressure sequencing deadband).

4. Lag Pump Sequencing: If the flow capacity of the lead pump is exceeded, the lag pump will start after an adjustable time delay. If the capacity of the lead pump and lag pump is exceeded, the second lag pump (on three pump systems) will start. The lag pump(s) will also start if both of the following conditions occur:

   a. System pressure drops several pounds below the desired system pressure (similar to the lead Pump) and (2) The VFD speed is equal to or greater than the lag pump start speed.

   b. The lag pump(s) will run for at least the duration of the minimum run time and then stop as demand recedes.

5. Sequence Alternation: The pumps will switch starting positions each time the lead pump either runs for 24 hours or has a non-alarm shutdown. They will also alternate starting positions if the lead pump has over 50 more “AUTO" hours of run time than the next pump in the sequence If the lead pump is running at the time of alternation, it will continue to run for 10 seconds more with the new lead pump to help prevent water hammer.

6. Automatic PID Speed Control: In this mode, the booster system will automatically maintain desired system pressure. The controller compares the system pressure measurement from the system pressure transmitter (process variable PV) and the system pressure set point (SP). A proportional, integral and derivative (PID) algorithm to maintain system pressure. As the pressure in the pipe decreases, the pump speed will increase until the pressure is returned to its set point value. If the pressure begins to rise above the set point, the pump speed will decrease until the set point is reached.

7. All of the PID tuning constants are adjustable through the OIT. Proper settings ensure accurate and timely system response without overshoot or hunting. Minimum and maximum values set through the OIT determine the minimum and

maximum speed limits so that the pumps are never operated above or below certain speeds.

8. Manual Speed Control: If the system pressure transmitter fails or the operator chooses, the controller will output a constant speed value to the drive, which can be adjusted by the operator using the OIT.

R. Alarms

1. Several of the alarms described below feature adjustable set points. These can be adjusted using the OIT. Each of the alarms described below, except as noted, will activate the alarm horn, illuminate the alarm condition light and post an alarm message on the OIT.

a. Low Suction Pressure \ Level Alarm: The low suction device (pressure switch, pressure transmitter, or level switch) signals a loss of supply water pressure for 5 seconds (default), all pumps will be locked off. This alarm is disabled in the event of a suction pressure transmitter failure. This alarm requires manual resetting.

b. Low System Pressure Alarm: If system pressure drops to or below the low system pressure set point for 30 seconds (default), this alarm will activate. System performance will not be affected by this alarm. It is used to alert the operator that a problem occurred. This alarm will be disabled in the event of a system pressure transmitter failure. The alarm requires manual resetting.

c. Pressure Transmitter Out of Range Alarms: The correct output range of the pressure transmitter(s) is 1 - 6 kHz. The pressure transmitter failed low alarm will activate if the controller receives an abnormally low signal for 2 seconds. The pressure transmitter failed high alarm will activate if the controller receives an abnormally high signal for 8 seconds. The system will run at the manual speed set point if the system pressure transmitter fails

d. Individual Drive Fault Alarms: If a fault occurs in the drive when it is being called to run, the VFD failure alarm will be activated. This alarm will stop the pump with the failed drive and start the next available pump if it is not currently running. The alarm requires manual resetting with the alarm silence / reset push button.

e. Analog Output Module Failure Alarm: The analog output module is used to send a speed signal to the variable frequency drives. The module has a self-diagnostic feature that will indicate if it is not functioning properly. Should this alarm occur, the module must be repaired or replaced and the alarm manually reset to resume normal operation of the system.

f. Irregular Power Alarm (optional): If a power monitor is included with this system, it will protect the system from an abnormal main power condition.

If irregular power is sensed, the system will shut down all motors until normal power has been restored for 10 seconds.

g. PC Input Failure Alarm: This alarm prevents running the pumps in "AUTO" if the programmable controller loses 24 VDC input power for 1 minute. The pumps can be run in the “HAND” position while the problem is repaired. The alarm will automatically reset once corrected.

h. Alarm Combinations: If multiple alarms occur, the controller will indicate all alarm conditions by continually scrolling them on the OIT. The alarm silence/ reset push button can be pressed to stop the scrolling.

i. Resetting Alarms: Each of the alarms (except Pressure Transmitter Out of Range and Irregular Power) requires manual resetting before returning to normal automatic operation. This ensures proper troubleshooting problem solving, and a smooth return to normal automatic operation by the operator. Before resetting an alarm, the alarm horn must first be silenced by pressing the alarm silence / reset push button. Five seconds after silencing the alarm horn, the system can be reset (provided the original reason for the alarm has been corrected).

j. Event History: This feature displays the last 200 events that have occurred on the system with record 0 being the most recent. An event is when any alarm occurs or the operator attempts to reset an alarm with the alarm reset push button. For each event record, the following information is provided:

1) Event Code (see Appendix 2 for listing)
2) Date
3) Time
4) System Flow Rate (gpm)
5) System Pressure (psig)
6) System Pressure Set Point (psig)
7) Pumps Running Status (0, 1,2,3-if three pump system)

S. Protection Devices

1. Operator Safety: The enclosure features door-interlocking motor disconnecting devices (motor starter protectors, fused disconnect switches, or circuit breakers). These prevent the opening of the panel while the motors are running.

2. Motor Protection: Each motor will be protected against overload and short circuit current by one of the following devices:

a. Motor Starter Protectors: If a MSP should trip due to over-current the MSP handle will turn to an intermediate position between "ON" and "OFF". To reset the MSP, turn the handle to the "OFF" position and then back to "ON", similar to a tripped circuit breaker.

b. Fused Disconnect Switch: Dual-element fuses are provided for over-current protection.

c. Circuit Breakers: If a circuit breaker should trip due to over-current, the handle will turn to the "TRIP" position. To reset the circuit breaker, turn the handle to the "OFF" position and then back to "ON".

d. Control Circuit Protection: The control power transformer is sized according to the consumption of power of the controls. Fuses that are sized according to N.E.C. requirements for transformers protect the primary and secondary circuits.

e. Pump Over-Temperature Protection: Each pump is fitted with a mechanical temperature purge valve. If the water in a pump becomes too hot (at low flow), the valve will open. The hot water is then dumped to drain, allowing cool water to enter the pump from the suction side. Once the pump is cool again, the temperature purge valve will close.

T. Remote Indication

1. Analog Outputs: Analog output signals are provided for the system flow rate, system pressure, and suction pressure (if equipped). The outputs are each 4 - 20 mA and the operator may adjust the upper limit of the output range for each.

2. Discrete Outputs: Indication of the low system pressure alarm, the low suction pressure/ level alarm, and if a pump is disabled is provided.

U. Emergency Alarms and Control

1. Automatic alarm sequencing shall include the following features:

a. Sequence shifting that adjusts the pump sequence when any pump is disabled
b. Each pump shall have a temperature relief valve
c. Sequencing to reduce hydraulic or electric surges after power restoration or alarm reset

2. All pumps shall stop and require manual reset in the event of high system pressure, or low suction pressure alarm conditions. Low system pressure alarm requires manual reset.

V. Factory Test and Certification

1. The factory shall certify in writing that the water pressure booster system and its component parts have undergone a complete operational electric and hydraulic flow test prior to shipment. The test shall include a SYSTEM operating test from zero to 100% design flow and suction and system pressure conditions. The certification shall include copies of the flow and pressure test data as recorded on 11" x 17" X-Y plot.

a. The system test may be witnessed by the Owner, Architect, consulting engineer, or contractor by reporting intent to do so to the

factory no later than 2 weeks before expected system shipment. After flow test, manufacturer shall conduct hi-pot voltage test of system

W. Booster Pump Package Maintenance

1. One (1) preventative service maintenance visit shall be provided on site by the authorized service center for the manufacturer's equipment. Manufacturer shall have a contracted factory authorized service center with a minimum of 10 years experience within a 250 mile radius of the jobsite installation to respond to repairs and service requirements

X. Installation

1. The Contractor shall install the system in accordance with the manufacturer's recommendations.

   a. Include a floor drain sized according to local code. Drain shall provide emergency drainage to prevent building damage in the event of seal failure, over- temperature, or tank discharge.
   b. Install pump system on a concrete pad at least 6" tall.
   c. Anchor pump system in accordance with system manufacturer's recommendations.
   d. Pipe temperature relief valve discharge to drain
   e. Install isolation valves on each header.
   f. Pipe pumping system bypass line with isolation valve
   g. All field anchoring, piping, and wiring shall comply with local codes.

Y. Startup Service

1. The service of a factory-trained representative shall be made available on the jobsite to check installation, supervise startup, and instruct the operator.

2.4 RECLAIMED WATER PRESSURE BOOSTER

A. Same as 2.3 Pressure Booster above except triplex pumps as follows:

1. Grundfos CRN 10-4, 3 HP, 460 V / 3 phase each.

2. 60 gpm, 120 ft TDH each.

3. System flows:

   a. 0-60 gpm lead pump runs.

   b. 61-120 gpm lead plus one lag pump run.

   c. 121-180 gpm all pumps run.

2.5 FOUNDATION DRAINAGE PUMPS

A. Furnish and install where shown on plans, one duplex set of Peerless sump pump model.

1. No. 5UHM, Flygt, Zoeller or Weinman, vertical suspended type centrifugal, open impeller, provided with base plate, suction plate and 4” discharge. Each pump has a capacity of 25 GPM against a TDH of 25ft.

2. Construction features

a. Stainless steel shaft
b. Cast iron impeller

3. Motors

a. ½ HP, 480 volts, three phase, 60 cycle, AC, 1750 RPM, TEFC motors.

4. Controls

a. Four (4) mercury float switches suspended from cable holder integral to the cover, each with a minimum 20 ft cord.

b. One (1) NEMA I duplex control cabinet with:

1) (2) magnetic starters
2) (2) fusible disconnect switches
3) (1) automatic alternator
4) (2) TOA selector switches
5) (2) running lights
6) (2) control circuit transformers
7) (1) 4” alarm bell with silencer (120V).)Electrician to provide separate source of power for alarm)
8) (1) set of isolated contacts for remote alarm

5. Cover

a. Provide gas tight square steel cover with all necessary openings for pumps, inspection opening and frame for casting into concrete. Cover shall be sized to fit 36”x36” cast in place concrete sump. All openings shall be caulked.

2.5 SEWAGE EJECTORS

A. Furnish and install where shown on plans, one duplex set of Flygt sewage ejector Model No. FP-3102-429LT, Peerless or Zoeller, 4" discharge. Each pump has a capacity of 165 GPM against a TDH of 30 ft.

B. General:

1. Non-overloading characteristics so as not to exceed nominal rating of motor at any point on curve.

2. Pumps capable of macerating sewage solids and fibrous wastes into a fine slurry and designed to pump air and liquid in combination without becoming air bound.
3. Mechanical Seal: Independent, tandem, double mechanical pressure compensating seals, running in an oil reservoir. Seals composed of two separate tungsten-carbide lapped face rings. Lower compression spring protected against exposure to sewage.
4. Galvanized lifting chain and guide rails.

C. Pump:

1. Automatic non-clog submersible cutter type, cast iron casing, bronze, non-clog type impeller. The impeller shall be dynamically balanced, open type hardened cutter with extended spiral blade to capture long fibers and cut (shear) them between the hardened white-alloyed iron edges of the mating cutter plate.
2. Discharge: galvanized steel flanged.
3. Provide automatic flush valve device on one pump: cast iron body, polyurethane ball, and adjustable flush time. Flygt 4901.

D. Motor:

1. 5 HP, 460 V, 3-phase motor shall have a dry air filled shell with Class H insulation, designed for 180 ^{o}C maximum and voltage tolerance shall be +10% and -14%. The motor shall be capable of 22 equal starts per hour and shall be non-overloading of the complete pump curve. Pump and motor shall be capable of running continuously in a totally dry condition. The motor shall be inverter duty rated in accordance with NEMA MG1, Part 31. The stator shall be insulated by the trickle impregnation method using Class H monomer-free polyester resin resulting in a winding fill factor of at least 95%. The stator shall be heat-shrink fitted into the cast iron stator housing, secured without the use of bolts, pins or other fastening devices that require penetration of the stator housing. Motors shall have, protective thermal switches embedded in the windings of each phase and wired to the control panel.
   The junction chamber with terminal board shall have a watertight sealing gland between chamber and motor housing. Motor/pump shaft shall be the same continuous unit, with no coupling required, constructed of ASTM A479 S43100-T stainless steel. It shall rotate on two permanently grease lubricated bearings. The upper bearing shall be a single deep groove ball bearing. The lower bearing shall be a two row angular contact bearing to compensate for axial thrust and radial forces. The motor cable shall be non-wicking with strain relief at the junction chamber, strain relief and water sealing shall function separately. Cable sealing shall be accomplished by means of an elastomer grommet compression fitting, facilitating field cable service without the need for Epoxies, silicones, or other secondary sealants. The motor and pump shall be designed and produced by the same manufacturer.

E. Control:

1. Magnetic inductance type:

   a. Flygt “Multitrode”.

b. Level sensor: Solid multi-sensored probe type liquid level sensor for suplex pump operation, high and low water level alarms. Premium quality uPVC extruded tube with stainless steel sensors epoxy encapsulated in a rigid unit and suitable for up to 212° F, suspended by a single multicolored cable from a stainless steel combination mounting bracket and cleaning squeegee by a stainless steel hook. One differential level sensor installed as a redundant level control device.

c. Control module: Liquid level display, set point adjustment, automatic alternator with manual override.

d. Sequence of operation shall be as follows: Upon increasing liquid level the lead pump sensor shall activate, lead pump shall start and pump down to the pump off level sensor. If the lead pump should fail or be unable to handle the load for any reason, the rising level will activate the high water level alarm, if the level continues to rise, the lag pump shall start and pump together with the lead pump down to the pump off level sensor. If the level continues to rise to the lag pump level sensor, lag pump shall start and pump together with the lead pump down to the pump off level sensor. In the event of failure of the pump stop sensor, the low water level alarm sensor shall stop both pumps and activate the alarm system. In the event of a control power failure, an auxiliary alarm contact shall be activated. Pumps shall be automatically alternated on every cycle.

F. Controller:

1. Combination unfused disconnect switch and across-the-line magnetic starter.

a. Overload protection for each phase leg.
b. Undervoltage release.
c. Pump running lights.
d. Elapsed time meter.
e. The controller shall be configured to accept <u>both</u> power feed arrangements: one main power feed, or individual power feeds to each pump, to be determined in the field at the time of installation. The transformer shall have a, flip-flop, automatic transfer circuit on the primary side to insure continuous power under either arrangement.
f. The control panel shall include a GAF Flush-Cleanse Controller to purge the pit of sediment, floating solids and grease. Twice per day the controller shall energize the Flush system and lower the liquid level of the pit below the pump stop float to a pump snore condition. The interval between Flush-Cleanse cycles and the duration of the cycle may be operator selected. During the cycle, the low water level alarm system shall be deactivated.

2. 24 volt control circuit transformer.

3. HOA selector switch.

4. Alarm with silencing push-button and form C auxiliary contacts for remote trouble alarm.

   a. Alarm conditions:

      1) High water level.
      2) Low water level.
      3) Pump failure.
      4) 2-pump over temperature.
      5) 2-motor insulation fault.

5. Prewired in single NEMA-I enclosure of steel construction.

G. Basin:

1. Reinforced, poured in place concrete by CM. Size as noted on drawings.

2. Cover: 1/4" thick epoxy coated checkered steel gasketed with openings for:

   a. Pumps.
   b. Controls.
   c. Alarm tube.
   d. Vent.
   e. 14" x 20" gasketed access manhole cover. The hatch shall have a removable T handle, stainless gas springs for easy opening and adjustable slam latch for a tight seal. Piping penetrations shall be by means of factory installed, heavy rubber, environ seals.

3. Install top of cover flush with finished floor with suitable frame of galvanized steel with welded stops and lugs for anchoring into concrete.

H. Warranty:

1. Prior to shipment the pump manufacturer shall perform quality assurance tests to include: checks for compliance with specifications, operating the pumps submerged in water and verification of the integrity of the motor and cable insulation. The pump manufacturer shall warrant the pumps being supplied for a period of five (5) years from date of shipment under normal operation and service. The warranty shall include parts and labor. The pump manufacturer shall warrant the motors for twenty (20) years from date of shipment. The pump manufacturer or his representative shall provide start-up services. The manufacturer's representative shall include a one (1) year service contract. The service contract period shall commence upon owner acceptance of the equipment.
   The service contract shall include a complete system inspection twice a year including: check running amperage and voltage of all phases, check electrical resistance of motor windings, check condition of submersible cables, check for proper pump sequencing and alarm activation with adjustments, **as** required; and review of instructions for operating personnel, if requested. The contract shall also include an annual change of the seal chamber oil. Any required service

work to be noted in a formal inspection report along with a detailed proposal for the repairs.

2.6 HYDRAULIC ELEVATOR SUMP PUMP

A. Furnish and install where shown on plans, Simplex, submersible oil sensing sump pumps to serve elevator sumps. The units shall be Stancor Model SE-100 with 2" discharge. Each pump shall have a capacity of 50 GPM at a total head of 25'.

1. Construction Features

a. Stainless steel sensor probe

b. Shaft seal

c. Upper and lower ball bearings

d. Semi-open, multi-vane impellor, stainless steel wear plates and steel strainer

e. Check valve

2. Motor

a. 1 HP, 460 V, 3-phase, 60 cycle, AC, 3,600 RPM, 25'-0" power cable to Stancor junction box.

3. Controls

a. Stancor Oil-Minder system with audible and visual alarm and dry contacts for B.A.S. Alarm shall indicate high liquid alarm or oil in pit (pump off).
b. Oil-Minder cable
c. Power cable
d. Probe cable
e. High liquid alarm cable
f. Pump on float cable

2.7 CIRCULATORS (CONTINUOUS RUN)

A. Circulating pumps shall be in-line with flanged connections. It shall be considered a continuous run system. The units shall be all bronze permanently lubricated equal to Taco, Bell & Gossett PL, or approved equal. Pumps shall be provided by water heater manufacturer.

PART 3 – EXECUTION

3.1 CONNECTIONS TO EQUIPMENT

A. Refer to Section 220500.

3.2 IDENTIFICATION OF SYSTEMS

A. Refer to Section 220553.

END OF SECTION 223000

SECTION 224000 - PLUMBING FIXTURES

PART 1 – GENERAL

1.1 WORK INCLUDED

A. The work shall include labor, materials, tools, equipment, transportation, insurance, temporary protection, supervision and incidental items essential for proper installation and operation, even though not specifically mentioned or indicated on the drawings but which are usually provided or are essential for proper installation of systems related to this Section, as indicated on the drawings and specified herein.

B. The specifications and drawings describe the minimum requirements that must be met for the installation of work as shown on the drawings and as specified hereinunder.

C. Shop drawings.

D. Fixtures and equipment shall be supported and fastened in a satisfactory manner. Where wall hung fixtures are secured to masonry walls or partitions, they shall be fastened with 1/4" through bolts provided with nuts and washers at back. Bolt heads and nuts shall be hexagon, and exposed bolts, nuts, washers, and screws shall be chromium plated brass.

1.2 RELATED SECTIONS

A. Examine drawings and criteria sheets and other Sections of the specifications for requirements which affect work under this Section whether or not such work is specifically mentioned in this Section.

1. Section 220500 – Basic Plumbing Materials and Methods
2. Section 221110 – Plumbing Valves
3. Section 221120 – Plumbing Distribution Piping
4. Section 221130 – Drainage and Vent Piping
5. Section 221140 – Plumbing Specialties
6. Section 223000 – Plumbing Equipment
7. Section 226000 – Laboratory Plumbing Systems

1.3 TOILET ACCESSORIES

A. Attention is directed to Section 10800 of the General Specifications. Toilet room accessories, including grab bars, shall be furnished under Section 10800 of the Specifications. The labor for installing toilet room accessories and all back-up material of wood, fasteners, hangers, brackets, etc. shall be by the Contractor. Reference shall be made to Architectural Specifications and drawings for exact quantity, type and locations of toilet accessories. Accessories must be properly fastened with special attention given handicapped persons grab bars which must be anchored in accordance with manufacturers instructions. Store accessories until required on job.

1.4 ALTERNATES

A. Refer to Section 01230 – ALTERNATES.

1.5 SUBMITTALS

A. Refer to Section 220500.

B. Submittals – The following documents shall be provided:

1. Plumbing fixtures and trim.

1.6 QUALITY ASSURANCE

A. Refer to Section 001400 – QUALITY REQUIREMENTS.

PART 2 – PRODUCTS

2.1 FIXTURES AND TRIM

A. Acceptable Manufacturers: Submit manufacturers not listed below for review and approval as specified for substitutions in Section "Quality Assurance" in this specification.

B. All fixtures used with domestic water systems shall have lead free wetted surfaces and shall be listed under NSF/ANSI 372.

C. Fixture Trim and Accessories: Provide fixtures complete with fixture carrier, faucet, drain outlet, tailpiece, P-trap, and stops and supplies.

1. Finish: All trim exposed to view shall be polished chrome plated.

2. P-Traps: Cast brass adjustable P-trap with cleanout plug, ground joint and 17 gauge minimum weight extension with escutcheon. Provide Chicago or McGuire #8090 1 1/4" by 1 1/2" on lavatories with overflow and ½” x 2” without overflow and #8098 1 1/2" by 1 1/2" on sinks.

3. Drain Outlets: Provide drain outlet of the same manufacturer as the fixture or faucet trim with chrome plated cast brass plug with 17 gauge minimum weight tailpiece. Provide 1 1/4" tailpiece on lavatories and 1 1/2" on sinks.

4. Stops and Supplies: Chrome plated, brass with stop, Chicago or McGuire #170-LK, escutcheon flexible riser. Refer to other Sections herein for information on transition between materials.

5. Joints between wall mounted fixtures and wall shall be sealed with caulk to match fixture color.

6. All faucets, water coolers and drinking fountains shall be constructed of a lead free brass alloy and where applicable, shall be certified to comply with NSF 61 Section 9 Drinking Water Standard.

D. Water Conservation: Provide water conserving fixtures and trim compliance with the following maximum water use requirements. Provide variable pressure flow controls on showers, sinks and lavatory faucets.

1.	Public Lavatories:	0.5 gpm
2.	Sinks:	1.5 gpm
3.	Water Closets	1.28 gpf
4.	Urinals:	0.125 gpf

E. Fixture Supports

1. Acceptable Manufacturers: J.R. Smith, Zurn, Wade, or Josam

2. Provide floor mounted fixture support carriers for wall mounted fixtures including, but not limited to, water closets, lavatories, scrub sinks and clinical sinks. Fixture support shall support at least 250 lbs. for (5) minutes. Furnish complete with foot piece, all necessary bolts, nuts, washers and gaskets. The adjustable nipple for the water closets between the cast iron fitting and closet bowl shall be threaded cast iron. Secure all foot pieces to floor slab using four bolts per foot.

3. Close coordination is required between the plumber and tile subcontractor in closet installation. Maintain 1/16" clearance between finished wall and back of closet and follow manufacturer's details in installing couplings to ensure tight seal at closet outlet. Closet hanging templates must be used.

a.	Water Closets:	Zurn ZR-1204, J.R. Smith 230
b.	Lavatories:	Zurn ZR-1231, J.R. Smith 700
c.	Urinals:	Zurn Z-1222, J.R. Smith 637

F. Fixtures

1. Refer to schedule on drawings for fixture types and model numbers.

   a. Water closets shall be elongated, wall hung vitreous china, 1.28 gpf siphon jet with 1-1/2" top spud equal to Kohler, American Standard or Eljer or Crane.

   b. Flushometer valve shall be exposed chrome plated, 1" I.P.S. screwdriver angle stop, protective cap with set screw, adjustable tailpiece, vacuum breaker and spud coupling, set screw escutcheon at wall equal to Sloan, Zurn or Delany.

c. Seats shall be heavy duty, institutional, solid plastic seat for elongated bowl, open front less cover with self-sustaining check hinge equal to Kohler, Bemis or Olsonite.

d. Fixtures designated for handicapped use shall be installed in accordance with the Americans with Disabilities Act as well as state and local codes.

PART 3 – EXECUTION

3.1 EXAMINATION / PREPARATION

A. Inspect existing site conditions in areas where piping and fixtures will be installed and verify existing systems and the impact of the proposed modifications before fabricating systems to be installed.

B. Notify the Architect immediately regarding any substantially different conditions than those shown in the Contract Documents.

3.2 CONNECTIONS TO EQUIPMENT

A. Refer to Section 220500.

3.4 FIXTURE ROUGHINGS

A. Install rough plumbing, including fixture carriers and supports, valves and water hammer arrestors within chase tolerances. Supply roughing through finish walls and at hose bibbs and shower heads shall be secure and free of movement. Locate valves and water hammer arrestors within 12" of approved access panel location.

B. Align exposed waste and supply pipe roughings with fixture connections within 1" tolerance. Provide flush valves in alignment with the fixture, without vertical or horizontal offsets. Obtain fixture manufacturer roughing data sheets for recommended roughing dimensions.

C. Provide fixture templates for casework Contractor for counter mounted sinks and lavatories.

D. Secure fixture supports to floor slab construction with lag bolts and metal expansion shields to support at least 250 lbs. for (5) minutes.

E. Provide fixture rough-in piping connection sizes in accordance with the drawing schedule.

END OF SECTION 224000

SECTION 226000 - LABORATORY PLUMBING SYSTEMS

PART 1 – GENERAL

1.1 RELATED DOCUMENTS

A. Drawings and general provisions of the Contract, including General and Supplementary Conditions, Section 220500 and other Division 1 Specification sections, apply to this section.

1.2 WORK INCLUDED

A. The work shall include labor, materials, tools, equipment, transportation, insurance, temporary protection, supervision and incidental items essential for proper installation and operation, even though not specifically mentioned or indicated on the drawings but which are usually provided or are essential for proper installation of systems related to this Section, as indicated on the drawings and specified herein.

B. The specifications and drawings describe the minimum requirements that must be met for the installation of all work as shown on the drawings and as specified hereinunder.

C. Shop drawings.

D. Field acceptance testing.

E. Installation of Laboratory trim furnished by others.

F. Piping valves and fittings for laboratory services.

G. Compressed air system including compressor and all associated piping and valves.

H. Vacuum system including vacuum pump and all associated piping and valves.

I. Pure water system.

J. Manifolds for laboratory gases.

1.3 RELATED SECTIONS

A. Examine drawings and criteria sheets and other Sections of the Specifications for requirements which affect work under this Section whether or not such work is specifically mentioned in this Section.

1. Section 220500 – Basic Plumbing Materials and Methods
2. Section 220553 – Plumbing Identification
3. Section 221110 – Plumbing Valves
4. Section 221120 – Plumbing Distribution Piping
5. Section 221130 – Drainage and Vent Piping
6. Section 221140 – Plumbing Specialties

7. Section 223000 – Plumbing Equipment

1.4 REFERENCES

A. Applicable provisions of the following Codes and Trade Standard Publications shall apply to the work of this Section, and are hereby incorporated into, and made a part of the Contract Documents.

B. Material standards shall be as specified or detailed hereinafter and as following:

1.	ANSI	American National Standards Institute
2.	ASME	American Society of Mechanical Engineers
3.	ASTM	American Society of Testing Materials ASTM B88-78: Wrought Copper Fittings
4.	AWS	American Welding Society
5.	CS	Commercial Standards, U.S. Department of Commerce
6.	FM	Factory Mutual
7.	FS	Federal Specification, U.S. Government
8.	MSS Industry	Manufacturer's Standardization Society of the Valve and Fittings
9.	UL	Underwriters Laboratories, Inc.
10.	OSHA	Occupational Safety and Health Act

1.5 SUBMITTALS

A. Refer to Section 220500.

B. Submittals: The following documents shall be provided;

1. Vacuum system.
2. Laboratory system pipe materials and valves.
3. Compressed air system.
4. Laboratory fixtures and trim.
5. Manifold gas system.
6. Air filters.
7. Valve box.
8. Pure water system.

1.6 QUALITY ASSURANCE

A. Manufacturer: Company specializing in manufacturing the type of products specified in this section, with minimum ten (10) years of documented experience.

B. Installer-company specializing in performing work of the type specified in this section with documented experience.

C. All equipment requiring electrical power connections including pumps, control panels and packaged skids shall be UL or ETL Listed as a complete assembly.

PART 2 – PRODUCTS

2.1 FIXTURES AND TRIM

A. Lab Outlets

1. Refer to schedules on architectural drawings for fitting types and model numbers.

2.2 PIPING, FITTINGS AND JOINTS

A. Polypropylene Piping

1. RODI Water System

a. Piping shall be SDR11 Series wall thickness conforming to ASTM-2837 with butt fusion joints rated for 150 psi at 68°F as manufactured by George Fischer, Asahi or SimTech.

b. If alternate manufacturer is submitted, it shall be the Contractor's responsibility to verify pipe sizes, pressure losses and velocities within the system. The Contractor will be required to submit his design prior to installation for review and approval.

B. Polyvinylidene Fluoride Piping

1. RODI Water System

a. High purity, natural, unpigmented, virgin, non-compounded PVDF, SDR rated piping system with butt fusion joints, ASTM D638. Piping shall be cleaned and capped, fittings shall be cleaned and bagged from factory. System as manufactured by George Fischer Signet, Inc., Asahi or SimTech.

C. Specialty Gas Pipe and Fittings

1. Use for Carbon Dioxide Only

a. All piping shall be seamless copper tubing, Type L hard temper, ASTM Designation B88 for assembly with braze joint fittings.

b. Fittings for connecting copper tubing shall be standard weight, wrought copper, brass or bronze type. Fittings for copper tubing shall be wrought copper fittings, deep socket, designed expressly for brazing at temperature greater than 1000°F or may be brass or bronze.

c. Brazing Alloy: For assembling braze-joint fittings shall be Aircoils 45 or other silver brazing alloy of equivalent melting point and physical properties and shall conform to ANSI/AWS A5.8.

d. All pipe shall be prewashed expressly for oxygen use and delivered washed and capped. Piping shall be installed with a constant nitrogen purge.

D. Specialty Gas Pipe and Fittings

1. All lab air (LA) and specialty gas piping GX shall be welded, drawn and annealed type 304L stainless steel, tube 16 GA. thickness; polished I. Min 25RA grade finish, mill finish OD.

2. Fittings shall be type 316 stainless steel, socket weld ends conforming to ANSI B31.1 and B31.2 or swage-lock, gyrolock, or Parter tube fittings. Fittings and pipe to be one manufacturer to assure proper fit and system conformance.

3. Joints shall be field fabricated by Orbital welding method, socket welded, either flanged or swage connections to valves, equipment and where indicated on the contract drawings. Swage style fittings are to be fabricated per manufacturer's instructions.

4. All pipe shall be prewashed expressly for oxygen use and delivered washed and capped. Piping shall be installed with a constant nitrogen purge.

E. Copper Tubing and Fittings

1. Vacuum Piping, Compressed Air Intake and Vacuum Exhaust

a. Tubing to be Type L hard temper with wrought copper fittings conforming to ASTM B88 and ASME B16.22. All joints shall be soldered with ASME AWS/A5.8 lead free solder.

2.3 VALVES

A. General:

1. All systems under this Section shall be provided with valves to permit complete and/or sectional control of the system. They shall be located to permit easy operation, replacement and repair. They shall be installed where shown on the drawings, at the base of all risers, at each branch takeoff from the riser or as herein specified. They shall be the product of the specified manufacturer.

2. All equipment shall be installed with isolation valves for service shut off. Equipment shut off valves shall be screwed ends or flanged. If screwed ends are provided, a union between equipment and valve shall be provided.

B. RODI Water Valves (Polypropylene)

1. Diaphragm Valves: 1/2" to 2", polypropylene, allowable working pressure of 150 psi at 68°F water, spigot ends, EPDM diaphragm, position indicator, George Fischer Type 315PP, Asahi or SimTech.

2. Diaphragm Valves: 2-1/2" and larger, polypropylene, allowable working pressure of 150 psi at 68°F water, flanged ends, ANSI Class 150, EPDM diaphragm, position indicator, George Fischer Type 317PP, Asahi or SimTech.

C. RODI Valves (PVDF)

1. Diaphragm Valves: 1/2" to 2", PVDF, allowable working pressure of 150 psi at 68°F water, spigot ends, EPDM diaphragm, position indicator, George Fischer Type 315PVDF, Asahi or SimTech.

2. Diaphragm Valves: 2-1/2" and larger, PVDF, allowable working pressure of 150 psi at 68°F water, flanged ends, ANSI Class 150, EPDM diaphragm, position indicator, George Fischer Type 317PVDF, Asahi or SimTech.

D. Specialty Gas Shutoff Valves (Air, Vacuum, Carbon Dioxide and all inert/specialty)

1. Ball valves shall be three piece bronze or brass body with chrome plated bronze or brass ball, Teflon seats and stem seal, full port designed with extension ends for brazing.

2. All valves except for vacuum shall be prepared for oxygen service. Valves to be rated for 400 psi and activated by 90 degree turn to full-on to full-off position, Watts B-6801or Apollo.

E. RODI Pressure Regulator

1. Pressure regulator shall be polypropylene with NPT threads. The valve shall be one piece body housing containing the inlet port, outlet port, valve seat and pressure orifice. The regulator shall have a piston with a fabric reinforced EPDM rolling diaphragm sensing the downstream pressure and providing for maximum sensitivity and control accuracy. The shaft connecting the piston and the valve seat assembly shall have a double U-cup seal for safety. The valve shall be as manufactured by Plast-O-Matic or George Fischer. Refer to the drawings for model numbers and pressure settings.

F. RODI Backpressure Regulator

1. Backpressure regulator shall be polypropylene with NPT threads. The valve shall be of the inline porting design with a solid diaphragm backed by an elastomeric supporting diaphragm. The pressure adjusting bolt and lock nut shall be plastic. The valve shall have fail-dry safety design with a vented chamber between the Teflon diaphragm and the secondary U-cup seal. The valve shall be 100% individually factory tested and shall be as manufactured by Plast-O-Matic or George Fischer. Refer to the drawings for model numbers and pressure settings.

G. Compressed Air Pressure Regulating Valve

1. High capacity diaphragm operated regulator with zinc body, aluminum spring cage, adjustment mechanism capable of maintaining a constant outlet pressure with wide variation in flow similar to Watts Model R-119

H. Specialty Gas Valves

1. All stainless steel with extended stems, Swagelok or compatible style ends equal to Whitey Series 40.

2.4 LABORATORY AIR COMPRESSOR SYSTEM

A. Furnish and install per plans and specs one (1) BeaconMedaes Model ZTM-125-AM-DUPL Gardner Denver or Hitachi Duplex package complete with controls, receiver and duplex dryers. Each compressor module is a fully enclosed, two-stage, air cooled, rotary lobe compressor driven by a 20 HP motor and delivering 100% oil-free air. The package includes the compressor, drive motor, oil system, regulation system and control module. Each compressor will be rated for 74 CFM @ 125 psig. Provide laboratory system controls with lead/lag program and alternator.

B. Compressor Performance Specs:

1.	Max. Working Pressure:	125 psig
2.	Capacity Free Air Delivery CFM:	74
3.	Installed Motor Power:	20 HP
4.	Noise Level[(2)]:	71 dB(A)
5.	System Capacity CFM	140
6.	Electric Power	460 v./ 3 phase AC

a. Unit performance measured according to ISO 1217, Ed. 3, Annex C-1996. Reference conditions: absolute inlet pressure 1 bar (14.5 psi); intake air temperature 20°C (68°F). At the following working pressures: 8 bar for working condition for max. pressure 8.6 bar..

b. Noise level measured according to Pneurop/Cagi PN8NTC2 tolerance: 3 dB(A)

C. The compressor shall be a two-stage, oil-free compressor block, consisting of separate low and high pressure rotary tooth compressor elements flanged to a common step-up gearbox. The compressor elements are air cooled. The high and low compressor elements are supplied with safety relief valves. The first stage air is cooled by an intercooler with moisture trap and automatic drain valve. The second stage air is cooled by an aftercooler with moisture trap and manual and automatic drain valve. The gearbox oil system includes an oil sump, pump, oil filter, bypass valve, drain connection, sight glass and cooler.

1. The compressor intake is equipped with an air intake filter and integral shutoff/unloading valve. Loading or unloading of the unit is controlled by a pressure transducer which will actuate the loading solenoid valve.
2. The compressor shall be direct driven. Torque is transmitted from the motor to the compressor through a flexible shaft coupling.
3. The air discharge for the compressor module has a pulsation damper, check valve and manual isolation valve.
4. Ventilation for the module is supplied by a radial fan with a separate motor.

5. The compressor control system will display the runtime hours, temperature readouts, pressure readouts, service indicators, safety warnings and safety shutdowns for the compressor module.
6. The compressor shall be TÜV certified ISO 8573-1 Class 0.
7. Compressor modules are fully enclosed with sound attenuated steel panels with full access doors for maintenance and inspection.

D. The compressor modules and motors shall be fully isolated from the main compressor module base by means of a heavy-duty isolation system for a minimum of 95% isolation efficiency.

E. Provide redundant air treatment systems including desiccant dryers, filters, and regulators sized for peak calculated demand. Include dew point monitoring. System shall include:

1. Desiccant dryers producing a -40°F (-40°C) pressure dew point. Refrigerant dryers are not acceptable.
2. Dryer purge flow control through an integral dew point based purge control system. Purge controllers using desiccant temperature are not acceptable.
3. The inlet to each dryer shall include a 1 micron coalescing filter and a 0.01 micron high efficiency coalescing filter with automatic drain and element change indicator.
4. Duplexed final line filters consist of a 1 micron particulate filter and one active carbon filter, each with element change indicators.
5. Duplexed final line regulators, duplexed safety relief valves, oil indicator, and air sampling port shall be factory mounted and piped.
6. Valving included to allow complete air receiver bypass.
7. Dew point transmitter mounted, pre-piped, and wired with dew point conditions displayed on the central control system. The dew point transmitter probe shall be the ceramic type sensor with system accuracy of minimum $\pm$ 2°C for dew point. High dew point condition shall be indicated with visual and audible alarms.

F. The central control system is NEMA 12, UL labeled, and rated for 115V single phase. The control system shall control multiple compressors and a duplexed desiccant drying system with dew point transmitter. Provide in the control system:

1. Automatic lead/lag sequencing and alternation.
2. Visual and audible reserve unit alarm with isolated contacts for remote alarm.
3. Automatic alternation of all compressors based on a first-on/first-off principle with provisions for simultaneous operation if required, automatic activation of reserve unit if required.
4. Visual and audible alarm indication for high discharge air temperature shutdown with isolated contacts for remote alarm.
5. Automatic restart after voltage failure with simultaneous start prevention.

G. Provide corrosion resistant, ASME Coded, National Board Certified galvanized receiver rated for a minimum 150 PSIG design pressure. Capacity to be 240 gallons. Include a liquid level glass, pressure gauge, safety relief valve, manual drain valve, and an automatic solenoid drain valve. During normal operation the flow of air will

travel through the tank to allow water vapor to condense in tank.

2.5 LABORATORY VACUUM PUMP SYSTEM

A. Provide a complete factory assembled and pretested duplex laboratory vacuum source, BeaconMedaes model VHS10D-200V-DV-SPLLAB, Busch or approved equal. System shall be rated for 174 SCFM at 19" HgV. Provide alternator with lead/lag controls.

1. Hp EACH PUMP 10
2. System HP 20
3. System Voltage 480V, 60Hz, 3 phase

B. All components shall be at least duplexed and valved to permit service to any component without interrupting vacuum supply to the facility during any maintenance operation or any condition of single fault failure. Each pump exhaust shall be isolated by a ball valve for service isolation.

C. Furnish complete plant consisting of pumps, receiver and controls capable of providing the scheduled capacity with one pump out of service.

1. Receiver is ASME code stomped and rated for minimum 150 psig design pressure.

D. System is entirely on a single base or a base which can be separated in the field for rigging. If separable, bases are prepared for separation from the factory. System or system sections fit through a standard 36 inch door frame.

E. System piping shall use o-ring sealed flanges and SAE O ring or flare fittings for minimum leaks and easy repair. Valves are butterfly or ball type, positive seal with three piece disassembly.

F. System is completely factory assembled. Field connections are (1) inlet line (from facility), (1) outlet, and (1) electrical conduit and power. Systems requiring site assembly are not acceptable (except reattachment of sections separated on site at contractor's convenience).

G. System base, frames, control cabinet, piping and receiver are powder coated for durable and attractive finish.

H. Each pump will include corrugated metal inlet and outlet flex connectors factory installed by the manufacturer. Systems employing plastic or rubber hoses for flex connectors are not acceptable.

I. Provide non contacting claw style rotary pumps. Internal construction is friction free and rotors are non-contacting. Air end is oil free and requires no sealants. Each pump is air cooled and continuous duty rated. Pump is provided with a single lubricated gearbox requiring oil change not more often than annually. manufacturer offers a testing service for pump oil to allow less frequent changes. Pump shall be provided with

exhaust silencer. Pumps shall be equipped with high vacuum shutdown and high temperature shutdown. Provide in the control system a single Variable Speed Drive Inverter and separate across the line motor contactors. One pump normally runs on the variable speed and other as required will run across the line.

J. Each pump will be direct or close coupled to a NEMA rated Premium Efficiency TEFC motor with a service factor of 1.15.

K. Control system shall be contained in a cabinet factory prepunched for conduit connections. Provide three punches: for power in sized per NFPA 70 Article 310 and based on total system amperes and for communications and for master alarm wiring, each sized at ½".

1. 16 bit, full color, VGA resolution touch screen display for system functions and system level control.
2. Separate 16 bit, full color half VGA resolution touch screens for display of pump functions and pump control. These controls provide selector control of Automatic, Manual (continuous run) or Off for each pump.
3. A separate disconnect handle with door interlock for each pump (note for systems greater than triplex, only two disconnect handles shall be required).
4. Audio sounder capable of 80 dB at 3 feet with mute function provided by the controls.
5. Power on lamp illuminated whenever any disconnect is On.

L. Provide in the control cabinet interior:

1. Full voltage motor starters with overload protection, one per pump.
2. Circuit breaker disconnects, one for each pump (note: for multiplex units greater than triplex, only two circuit breakers are required) operated by the through the door disconnect handle.
3. Redundant 24 Volt DC control circuit transformers including power seeking function in the event one power supply fails.
4. Power distribution terminal block convenient for main power entry.
5. All internal circuit boards and components needed for operation of the control system as described below.
6. Volt free contacts for connection to master alarms.
7. Controls circuitry shall be 24 Volts DC for worker safety. No system component other than the drive motors shall require greater than 24V for operation.

M. The control system shall provide for the following functionality:

1. Display of vacuum and VSD speed on a single display for at a glance checking.
2. Automatic lead/lag sequencing and alternation. Display clearly shows status of each pump including running unit, next-unit-in-sequence, and units unavailable to run.
3. Runtime hour-meters for each pump.
4. In the event of control failure the system shall activate all alarms and operate on a simple on/off basis until repaired.
5. When H-O-M selectors are in Manual mode, system will operate on vacuum switch and pump will not run if lead switch is satisfied.

6. Controls provide visual and audible alarm indication and isolated contacts for remote alarm for at least Lag Pump in Use, and High Temperature (for each pump unit alone or system together).
7. Controls provide automatic indication of major maintenance intervals and details of required maintenance kits.
8. Controls provide distinct separate indication on the control screens of alarms which shutdown the pump vs. alarms which do not shut down the pump vs. maintenance notifications.
9. Controls provide isolated contacts for remote alarms which can distinguish between a condition which shuts down the unit, A condition which does not shut down the system and A maintenance alert.
10. Control system permits individual test of lag in use, high temperature and controls fault alarm points from the touchscreen. System shall include low level testing of controls, local and connected master (source) alarms.
11. Controls permit automatic "bumping" of the pumps to test rotation.
12. Control system logs and allows review of all alarm and shutdown events.
13. Controls include an integral webserver using standard Ethernet allowing observation of system operating parameters from any remote location on the same network with any standard web browser. Systems requiring special software are not acceptable.

N. The complete vacuum system and all electrical components shall be factory pre-tested prior to shipment by the manufacturer. System manufacturer shall provide startup supervision by a qualified technician.

2.6 MANIFOLD GAS SYSTEMS

A. Provide specialty gas manifolds as indicated on the drawings. Manifolds shall be as manufactured by Square One gas + cryo equipment, Spectra Gases or Western Enterprise. Manifolds shall provide continuous supply of gas from multiple sources, the manifolds shall be provided with automatic changeover with stainless steel dual in-line regulators and a line regulator to control the delivery pressure. An alarm switch shall be provided within the manifold case and shall be capable of remote alarms. Manifolds shall be provided with flexible stainless steel braided pigtails with check valves, shut-off valves, individual header valves with handle grips at each cylinder.

B. The manifold for the CO_2 system shall be the same except provided with cryogenic pigtails.

2.7 VALVE BOXES

A. Emergency master gas control valve (MGCV) shall be Isimet Model LSP-1-211-3, 120 volt power.

B. Provide remote pushbutton with cover where shown on plans, wired to control valve. Isimet Model IPO-K-C.

2.8 PURIFIED WATER SYSTEM

A. Water Purification Equipment

1. Provide a central pure water system capable of generating 2,650 gallons of product in 8 hours (7,950 gallons per day), based upon cold municipal potable feed water with no tempering, with 2,400 gallons of storage by using two (2) 1200 gallon storage tanks. The system shall be factory wired. All skids shall have local disconnects at pumps and devices requiring starters for 460 VAC power. 110 VAC or 24 V signals from the central monitoring and control panel located on the distribution pump skid shall signal local stagers, starters, and VFDs. This Contractor shall be responsible for all required interconnecting wiring and piping between the skids. System shall be by Hydro or Siemens or Ipure $H_2O$and shall consist of, but not limited to, the following major components as required to provide the level of water quality specified. The specification is provided with references to U.S. Filter Equipment. The panel is to be wired to provide a single point connection for service from Section 260510. The contract shall include all components as required to provide a completely operational system as outlined by these documents and verified by the vendors detailed P, & I, D drawings.

2. Major Equipment

   a. (2) Multimedia filters
   b. (1) Duplex Water softener with brine tank
   c. (2) Carbon filters
   d. (1) Pre-RO UV sterilizer and carbon filter recirculation systems
   e. (1) Reverse osmosis system units
   f. Makeup mixed bed deionizers
   g. (2) 1,200 gallon conical bottom RO product storage tanks with stands, with accessories
   h. (1) Duplex Distribution pump skid, with UV and 0.2 micron filters
   i. (1) PLC control Panel
   j. Instrumentation

3. Performance requirements: The system shall generate water equal to the following, measured at the effluent of the distribution skid outlet:

   a. Silicate (SiO_2): $\leq$ 0.1 mg/l
   b. Resistivity: greater than 1.0 Megohm-cm at effluent of system
   c. Bacteria Content: less than 1000 CFU/ml

4. Complete documentation shall be provided with the pure water equipment. Documentation shall include but not limited to the following:

5. Detailed P&ID Drawing

   a. Valves tag numbers
   b. Instruments tag numbers
   c. Alarms
   d. Pipe sizing and material of construction
   e. Skid limitations
   f. Plan of component layout

g. Written sequence of operation

6. Mechanical Assemblies of all Skids

a. Dimensions
b. Major components highlighted
c. Bill of materials

7. Control Panel Layout

a. Lights, switches and instrument plaques
b. Back panel layout

8. Manufacture Catalog Data Sheets

a. Major components

9. Testing

a. Hydrostatic of all equipment
b. Control panel checkout

B. The following is a general description of the components:

1. R.O. Makeup System: The makeup system shall include duplex automatic multimedia filter; duplex automatic water softener; duplex automatic carbon filter, one single pass reverse osmosis unit, and mixed bed deionizers.

2. The multimedia filter, carbon filter and water softener shall be arranged in a series configuration. During standby (RO not consuming pretreated water) mode, the carbon filter and pre-RO ultraviolet sterilizer shall recirculate. Recirculation shall be controlled by the RO system central control and monitoring panel. A pressure switch shall be included to shut down the recirculation system based upon low pressure of incoming water supply.

C. Duplex Multimedia Filter

1. Automatic commercial multimedia filter

2. General Description

a. The duplex multimedia filter shall include FRP vessels, internal distributors, top mounted multiport valve, pressure gauges, sample valves, media and a control panel. Media shall be shipped separately.

3. Operation Parameters

Normal flow rate:	5.6 gpm
Peak flow rate:	15 gpm

Backwash flow rate:	20 gpm
Rinse flow rate:	20 gpm
Pressure rating:	100 psi maximum

4. Mechanical Description

   a. A top mounted, motorized control valve shall provide for quiet, efficient and dependable automatic operation of the unit.

5. Control Description

   a. The control panel shall allow the operator section of automatic initiation of backwash at any selected time. The operator shall be able to manually initiate backwash at any time. During backwash, the multimedia filter shall automatically bypass to allow uninterrupted operation of downstream equipment.

6. Pressure Vessel Construction

Material:	FRP lined with polyethylene
Diameter:	16"
Shell Straightside:	65"
Hydrostatic test pressure:	150 psi
ASME code stamped:	No
Internal Distributors	
Inlet distributor (top):	Basket diffuser
Underdrain distributor:	PVC basket strainer

7. Face Piping

   Pipe Material: PVC Sch 80 - solvent welded (by contractor if not factory skid mounted)

   Connections (on control valve):

Inlet:	1.5" female pipe thread
Outlet:	1.5" female pipe thread
Drain:	1" female pipe thread

8. Valves

   Isolation Valves:

Quantity:	Two (2), by others
Type:	Ball
Material:	PVC

   Sample Valves:

Quantity:	Two (2), by others
Type:	1/4" ball valve
Locations	Inlet, outlet

9. Instrumentation

Pressure gauges

Type:	316SST, liquid filled, 2½" face,
Locations:	Inlet, outlet

10. Control Enclosure

Enclosure rating:	NEMA 1
Enclosure material:	Steel
Enclosure finish:	Epoxy paint
Electrical:	120V/1ph/60hz, 10 watts

11. Media

	Lbs.	ft^3
Multimedia:	396	4

12. Utilities

Electrical: 120 V, 1 Ph, 60 Hz, 10 watts

D. Duplex Water Softener

1. Automatic commercial grade water softeners

2. General Description: The Duplex Water Softener shall include two FRP vessels, internal distributors, brine maker, top mounted multiport valve, pressure gauges, sample valves, media and a control panel. Media shall be shipped separately. The unit shall have down flow re-generation and downflow service.

3. Operation Parameters

Normal flow rate	5.6 gpm
Peak flow rate:	15 gpm
Backwash flow rate:	7 gpm
Rinse flow rate:	7 gpm
Pressure:	100 maximum

4. Mechanical Description

a. A top mounted, motorized control valve shall provide for quiet, efficient and dependable automatic operation of the units. One softener shall be on line while the other is in standby. The units shall alternate automatically.

5. Electrical Description

a. Water meter shall initiate flow based on volume. The operator shall be able to manually initiate re-generation at any time.

6. Pressure Vessel Construction (Each)

Material:	FRP lined with Polyethylene
Diameter:	16"
Shell Straightside:	65"
Hydrostatic test pressure:	150 psi
ASME code stamped:	No
Internal Distributors	
Influent distributor (top):	Basket diffuser
Underdrain distributor:	PVC basket strainer.

7. Face Piping

Pipe material: Schedule 80 PVC Connections PVC Sch 80 - solvent welded (by Contractor if not factory skid mounted):

Connections (on control valve):

Feed water:	1.5" female pipe thread
Product:	1.5" female pipe thread
Waste:	3/4" female pipe thread

8. Valves (Per Vessel)

Isolation Valves:

Quantity:	Two (2), by others
Type:	Ball
Material:	PVC

Sample Valves:

Quantity:	Two (2), by others
Type:	1/4" ball valve
Locations:	Influent, effluent

9. Media

Cation resin in sodium form – 5 cubic feet per vessel.

10. Regeneration dosage

Minimum: 12 lbs. of brine per 1 ft^3

11. Salt Usage per regeneration

Minimum: 48 lbs.

12. Total Unit Capacity per vessel

Minimum: 120,000 grains

13. Instrumentation

Pressure gauges	
Type:	316SS, liquid filled, 2½" face psi.
Locations:	Feed water, product
Flow Meter:	Fleck or equal

14. Brine Maker

Construction:	Polyethylene
Size:	24" dia. x 60" ht.

15. Electrical and Controls

Enclosure rating:	NEMA Type 1
Enclosure material:	Steel
Enclosure finish:	Epoxy paint

16. Utilities

Electrical: 120 V, 1 Ph, 60 Hz, 10 watts

E. Duplex Carbon Filter

1. Automatic commercial activated carbon filter

2. General Description

a. The duplex activated carbon filter shall include an FRP vessel, internal distributors, top mounted multiport valve, pressure gauges, sample valves, media and a control panel. Media shall be shipped separately.

3. Operation Parameters

Normal flow rate:	5.6 gpm
Peak flow rate:	5.6 gpm
Backwash flow rate:	15 gpm
Rinse flow rate:	15 gpm
Pressure rating:	100 psi maximum

4. Mechanical Description

a. A top mounted, motorized control valve shall provide for quiet, efficient and dependable automatic operation of the unit.

5. Control Description

a. The control panel shall allow the operator section of automatic initiation of backwash at any selected time. The operator shall be able to manually initiate backwash at any time.

6. Pressure Vessel Construction

Material:	FRP lined with polyethylene
Diameter:	16"
Shell Straightside:	65"
Hydrostatic test pressure:	150 psi
ASME code stamped:	No
Internal Distributors	
Inlet distributor (top):	Basket diffuser
Underdrain distributor:	PVC basket strainer

7. Face Piping

Pipe Material: PVC Sch 80 - solvent welded (by contractor if not factory skid mounted)

Connections (on control valve):

Inlet:	1.5" female pipe thread
Outlet:	1.5" female pipe thread
Drain:	1" female pipe thread

8. Valves

Isolation Valves:

Quantity:	Two (2), by others
Type:	Ball
Material:	PVC

Sample Valves:

Quantity:	Two (2), by others
Type:	1/4" ball valve
Locations	Inlet, outlet

9. Instrumentation

Pressure gauges

Type:	316SST, liquid filled, 2½" face,
Locations:	Inlet, outlet

10. Control Enclosure

Enclosure rating:	NEMA 1
Enclosure material:	Steel
Enclosure finish:	Epoxy paint

11. Media

	Lbs.	ft^3
Activated Carbon:	112	4

12. Utilities

Electrical: 120 V, 1 Ph, 60 Hz, 10 watts

F. Pre R.O. Ultraviolet Sterilizer and R.O. Carbon Filter Recirculation System

1. Recirculation system controls shall continuously recirculate the following equipment to prevent stagnant water conditions in the pretreatment devices. All recirculation equipment shall be factory pre-plumbed, pre-wired, and skid mounted.

Recirculated components:

a. Carbon filter
b. Ultraviolet sterilizer (1) (to be located on inlet to RO system)

2. Electrical Controls

Switching..... HOA with indicator lamps
High temperature dump.....Included
Pump low feed pressure protection .....Included
HOA with indicator lamp for carbon recirculation shall be included

3. Mechanical Description

Pump .....Single impeller centrifugal

Instruments
Flow.....Mechanical rotameter (0-20 gpm)
Pressure gauges .....2½" face stainless steel
Piping valves ..... Schedule 80 PVC

4. Ultraviolet Sterilizer

a. Provide a UV sterilizer to flow up to 10 GPM of clear water. UV lamps shall be housed in recessed, fused quartz sleeves. Water shall enter the UV unit through helical baffles and travel tangentially through the chamber and around the quartz sleeve. Provide stainless steel elbows at the inlet and outlet to the unit. The UV shall provide in excess of 30,000 unit of UV energy and shall conform to the following criteria:

Maximum capacity clear water .....10 gpm
Maximum capacity pure water.....12 gpm
Electrical requirements..... 120V, 1 ph, 60 Hz
Number of UV lamps ..... (1) one

Bulb replacement/frequency ..... 7,500 hours (1 year)
Watts 61
Amps 0.51
Inlet/outlet size ..... 1" flange
Overall dimensions..... 38"H x 14"W x 7"D
Wetted parts material ..... Quartz and 316 stainless steel
Shipping weight .....41 lbs
Manufacturer .....Aquafine SL-1 or equal
Optical intensity sensor .....Included
Controls ..... On/Off, HOA switch
No flow lamp protection shall be included.

G. Simplex Reverse Osmosis Unit

1. Vertical R.O. system of low pressure design (< 400 psi)

a. The reverse osmosis system shall be mounted on a welded steel frame with all welds ground flush where noticeable. Frame shall be constructed of 1-1/2 inch angle iron. Bolt holes, mounting holes, etc., will be drilled prior to painting where possible. The base frame shall be sandblasted prior to painting. The complete frame shall be given a primer coat, followed by a finish coat of polyurethane or epoxy based enamel. The reverse osmosis system shall include a control panel assembly to mount or house all electrical and fluidic controls. The control cabinet shall be constructed of at least a NEMA 4X plastic, for corrosion resistance.

2. Membrane Type - Cartridges that utilize adhesive tapes in their construction shall not be allowed.

a. The reverse osmosis system shall utilize 4 membranes of thin film composite polyamide construction wrapped in a spiral configuration. Membranes shall be (5) FilmTec TFC full fit pharmaceutical style. The membranes shall produce 4,500 gallons per day (3 gpm) product at 38°F minimum (no tempering allowed) and ≤ 15 GSFD (gallons per square foot per day) maximum average flux. The membranes shall utilize a sanitary polypropylene cage design to provide positive flush of disinfectant and cleaning solutions and eliminate areas of reduced flow. Chevron seals and/or membrane cartridges which incorporate "brine seals" will not be accepted. The cartridges shall be industry standard 4" x 40" size and replaceable by multiple vendors. The RO membrane must be compatible with hydrogen peroxide based sanitants. System shall be Seimens Series 43-240 or approved equal.

3. Recovery

a. The reverse osmosis system shall be designed to have a minimum recovery of 75% (product flow divided by feed flow). This recovery is based on a pre-treated water with a silt density index ≤ 5.0. Higher recoveries shall be realized by utilizing reject recirculation providing that scaling limitations

are not exceeded. The high recovery feature or (concentrate recycle option) shall be included to provide adequate membrane cross flow. Overall system recovery shall be a maximum of 75%.

4. Piping

   a. Product Water Plumbing: Polyethylene and PVC
   b. Feed Water Plumbing: PVC
   c. Reject Water Plumbing: PVC
   d. High pressure piping: Brass and SS braided hose

5. Controller

   a. The reverse osmosis controller shall be controlled by a means of solid state programmable controller housed in a NEMA 4X splash proof housing. The controller shall be capable of operating all solenoid valve motors and safety interlocks associated with the system as listed below:

      1) Inlet Solenoid Valve
      2) Flush Solenoid Valve
      3) High Pressure Pump Relay

   b. Pretreatment Interlock
   c. Low Feed Pressure
   d. High Feed Pressure
   e. Tank Level Switch

   f. Standard input voltage shall be 120 volts AC single phase. Output voltage shall be 24 volts AC for safety.

   g. All P.C. boards must be "slide rack" and mounted and quickly replaceable with the use of common hand tools to facilitate quick emergency replacement.

   h. The controller shall be supplied with a time and duration automatic flush cycle field adjustable timing of automatic flush cycle(s). The RO system reject and autoflush valves shall be compatible with peroxide based sanitants. Automated flush cycles shall occur when the RO system is in full tank shutdown mode and/or system standby modes to prevent stagnant water conditions. Flush flow rate shall be controlled to provide a flow rate during flush mode equivalent to that of normal system operation. System flush mode shall also be indicated by a visual indicator L.E.D. lamp on the RO control display.

   i. The controller shall be equipped with a conductivity monitor. A percent rejection reading shall be calculated by the controller and displayed on a digital light emitting diode display module. The controller shall have the capability of providing and alarm output for the following conditions:

      1) High Feed Temperature with Indicator Lamp

2) Low Feed Pressure with Indicator Lamp Percent Rejection Below Setpoint with Indicator Lamp
3) Pretreatment in Regeneration (Standby Status Light)
4) These conditions shall also initiate a visual alarm or indicator on the controller module. Also, the controller shall have a 12 VDC general RO alarm output terminal.

6. Flow Meters

a. The reverse osmosis system shall be equipped with rotameters that are panel mounted no higher than 48" from floor level. These flow meters shall be mounted on the instrumentation panel and constructed of acrylic plastic. The flow meters shall monitor the product, reject to drain and reject recirculation flows.

7. Gauges

a. All gauges on the RO system shall be minimum 2-1/2".

8. Performance Specification

a. Production Capacity

b. SDI 3-5.....7,950 GPD

c. Maximum Operating Pressure .....400 psig

d. System Projected Rejection Rates .....>90%

e. Internal Recovery Rate (conversion) ..... 25% (maximum) per .....RO Cartridge

f. System Overall Feed water Recovery Rate..... Up to 75% adjustable. System shall be equipped with a concentrate recycle feature

9. Feed Water Requirements

a. Maximum Fouling Index (Silt Density Index).....5
b. Maximum Langelier Saturation Index ....Negative by a factor of at least 1.00
c. (Reject Scaling Index)
d. Maximum Free Chlorine.....0.02 ppm
e. Operating Temperature Range.....38°-77°F
f. Operating pH Range 4-11

10. System Dimensions (Approximate)

a. Height.....72"
b. Width .....34"

c. Depth ..... 38"

11. Electrical Requirements

a. Potential ..... 460 VAC
b. Phase ..... 3 Phase
c. Current (Full Load) ..... 6.0 amps

12. Pumps

a. Pump Type ..... Centrifugal Vertical
b. Manufacturer ..... Grundfos
c. Horsepower ..... 10 HP minimum, submersible type
d. Voltage 460V
e. Phases ..... 3 Phase
f. Materials of Construction (Wetted Surfaces) ..... Stainless steel

13. Plumbing Requirements

a. Inlet Pipe Size ..... 1.5"
b. Inlet Pipe Materials ..... PVC
c. Inlet Required Flow Rates ..... 8 gpm (max)
d. Inlet Required Pressure ..... 20-100 psig (20 min.)
e. Drain Pipe Size ..... 3/4"
f. Drain Pipe Materials ..... CPVC
g. Drain Flow Capacity ..... 5 gpm
h. Product Pipe Size ..... 3/4"
i. Product Pipe Material ..... PVC
j. Model Number ..... Vantage VC03

H. Mixed Bed Deionization

1. System design shall accept two (2) 3.6 cu. ft. FRP mixed bed deionizers (include first batch of resin). Mixed bed DI's shall be connected in series installation. Include hoses, duplex resin traps, duplex 0.2 micron filters and conductivity analyzer.

I. RO Product Storage Tanks

1. Provide two (2) 1,200 gallons vertical, conical bottom, cylindrical tanks with a total capacity of 2,400 gallons.

<u>Specifications</u> (Per tank)

Dimensions 69" diameter x 84" height (w/o stand) approx.
Provide all nozzles. Provide spray ball, conservation vent, level switch, and vent filters on each tank. Each tank shall be fully drainable while the other tank is in use.

Access:

Top Manway or 12" minimum access port
Material of construction .....Polyethylene

Auxiliary Equipment

Level switches
High Level - shutdown RO
Low level - fill tank
Low level – shut down distribution pumps

a. Provide one (1) three-way valve (or (2) two-way valves) located on each RO tank. The divert valve shall be mounted directly on the side of each tank to avoid dead leg between the RO and the storage tanks. The purpose of this valve shall be to divert RO product to drain on system startup and allow for periodic flushing on a timer to drain during RO standby or full tank mode. The divert valve will divert to fill the RO storage tank when water is needed. The valve shall be of polypropylene or stainless steel construction and be electrically actuated.

b. Each 1200 gallon RO storage tank shall be equipped with 0.2 micron vent filters to assure that airborne particulate matter and/or bacteria are not drawn into the tank during tank drawdown. Filter housing(s) shall be self draining to reduce the potential hazard(s) of cartridge wet out which could result in tank implosions.

c. Each storage tank shall be provided pre-plumbed with all valves necessary.

At the return of each polishing loop, back pressure regulating valve shall be “close mounted” to the storage tank(s).

Valve Type:	Spring Loaded
Relief Setting:	15-35 psi adjustable above working pressure
Instruments:	0-100 psi pressure gauge to be mounted immediately upstream of valve.

NOTE: All figures are "per tank".

Filter housing/type:..... Polypropylene
Quantity: Two (2) per tank

# of cartridges per housing one (1) 20" pleated elements per housing
Cartridge type: Hydrophobic asymmetric polysulphone membrane

Cartridges and vent filter housings shall be shipped separately with appropriate mounting hardware and supports for "above tank" mounting.

Manufacturer: ..... Filterite or Equal

Tanks and tank accessories will be shipped loose for field installation.

J. Distribution Pump Skid

1. General Description:

a. To recirculate the water that has been treated by RO and stored, a 100GPM duplex pump skid is to be provided to provide 30 psi at the system effluent. Two (2) 100% capacity pumps shall be provided. The pump skid shall be shipped completely pre-piped. One VFD (with pressure transmitter and PID loop control) per each pump shall be provided, with a disconnect in its own dedicated NEMA 12 enclosure to allow servicing of any pump without interrupting service flow. Deliver 85 psig at final skid discharge. The pump skid shall be built with flanged inlet and outlet connections to mate directly to adjoining tanks and other supplied equipment. One pump shall operate as a backup. Provisions shall be made to alternate the back-up pump on a time basis, in accordance with manufacturer's recommendations for best performance and longest life.

b. Pump quantity .....Two (2)
Pump type..... Multistage centrifugal
Design flow ..... 100 GPM (per pump)
Design pressure .....30 PSI (system effluent)
Manufacturer ..... Grundfos CRE 15-2 or Approved Equal

Materials of construction.... 316L stainless steel (wetted surfaces)

Horsepower .....5 HP
Phases.....3 phase
Voltage ..... 460 VAC
Components.....316 stainless steel

2. Skid, Valves, and Piping

Frame.....Carbon steel
Paint.....Epoxy, polyurethane, or powder coated
Valves (≥ 2”) .....Diaphragm (PP) or butterfly (EPDM/316SS internals)
Valves (< 2”) ..... Diaphragm, PP
Valves (filter vent/drain) .....Ball, SS or PP
Valves (sample).....Plug or ball, SS
Piping .....Pigmented PP, socket or butt fusion

K. UV Sterilizer, Filters and Instruments (skid mounted)

1. Ultraviolet Sterilizer

a. Unit shall be Aquafine Model HX04-CDL or equal, 254 nm, 120 psig rating. Unit shall be rated for 300 GPM service and constructed of 316L stainless steel. Include intensity monitor and stainless steel elbows.

2. 0.2 Micron Absolute Filters (skid mounted)

Quantity.....Two (2)
Housing type ..... 316L stainless steel
Connections inlet/outlet.....Flanged
Vent/Drain valves.....One each per housing
Cartridge length.....30"
Minimum # of cartridges.....Seven (7) per housing
Maximum flow per element ..... < 5.0 GPM per 10" cart. length
Cartridge manufacturer ..... U.S. Filter type, 30"/ea. or Equal
Housing manufacturer..... Pall, Filterite or Equal
Pressure Rating..... 150 psig
ASME Code Stamped .....no

3. Instrumentation

Pressure indicators (type)..... 316SS, 2.5" face, liquid filled, 1-160 psig
Pressure indicators (locations).....before and after each unit process
Flow meter (1)..... Electronic, Signet or equal
Conductivity analyzer (1)..... Thornton 200CR with (1) Probe
Sample valves.....before and after each unit process

L. Warranty

1. System manufacturer shall warrant all equipment against defects in materials and workmanship, including part and labor, for a period of 12 months from date of startup or 18 months from delivery, whichever occurs first, for all equipment above.

M. Field Services

1. System manufacturer shall provide a trained factory field service engineer or technician, as required, for installation supervision, media loading, system startup, loop balancing, loop sanitization, and operator training.

PART 3 – EXECUTION

3.1 EXAMINATION / PREPARATION

A. Inspect site conditions in areas where piping and equipment will be installed and verify systems and the impact of the proposed equipment before fabricating systems to be installed.

B. Notify the Architect immediately regarding any substantially different conditions than those shown in the Contract Documents.

3.2 TESTING OF PURIFIED WATER PIPING SYSTEMS

A. General

1. All piping systems shall be subjected to testing with water, gas or air as noted and shall hold tight at the pressure head stated for the time interval required without adding air or water. While any system is being tested, required head or pressure shall be maintained until all joints are inspected. All systems tested in the existing building shall be tested with air before water.

2. All tests shall be witnessed by the CM having jurisdiction and the Architect/Engineer, with 48 hour notice given these authorities.

3. All equipment, material and labor required for testing any of the various systems or any part thereof shall be furnished by this Contractor.

B. High Purity Water Piping Systems: Upon completion of these piping systems, including cooling for a minimum of (1) hour and the system empty of water, a test using compressed nitrogen gas N.F. or clean dry air can be done with the pressures not to exceed 5 psi to determine any obvious leaks. A hydrostatic test shall be done by filling the system with product water and opening valves and vents to purge the system of any air. Begin pressurizing the system in 10 psi increments up to 100 psi and holding the pressure for a minimum of 2 hours and up to a recommended 12 hours. Due to the natural creep effects of plastic pipe, the pressure should be checked after 1 hour. If the drop is less than 10 psi, pump the pressure back up. At this time, the system may be pressurized to the system pressure. If the pressure decreases more than 10% and ambient temperatures have been maintained, consider the test a failure. If the pressure drops less than 10 psi after 1 hour, pump the pressure back up to system pressure. After 2 or 3 hours the pressure holds, the test will be considered a success. Refer to manufacturer's recommendations and procedures for additional information.

C. Defective Work: If inspection or tests show defects, such defective work or material shall be replaced and inspection and tests shall be repeated. All repairs to piping shall be made with new materials. No caulking of screwed joints or holes will be acceptable.

3.3 IDENTIFICATION OF SYSTEMS

A. Refer to Section 220500.

3.4 LABORATORY PLUMBING EQUIPMENT CONNECTIONS

A. Furnish and install domestic and laboratory waste and vents, non-potable hot and cold water, domestic cold and hot water, vacuum, compressed air, CO_2, inert/specialty and RO/DI water piping as required including pipe stands and trim and all final connections to laboratory sinks, cup sinks, fume hoods and equipment. Roughing for this equipment shall be as indicated on the drawings.

B. Furnish and install shutoff valves at each piece of equipment. Obtain exact roughing in dimensions from manufacturers of all service locations before connecting to or roughing for equipment.

C. Laboratory equipment shall be furnished and set under another Section of the Specifications. Roughing for and final connections to including piping shall be provided by this Contractor.

D. Fume hood plumbing trim furnished by Others shall be unpackaged and installed by this Contractor.

E. Coordinate casework and sink units with Casework Contractor.

F. Extreme care must be taken in the sealing of all pipe penetrations through the walls, floors and ceilings in the laboratory areas.

3.5 SPECIALTY GAS AND COMPRESSED AIR SYSTEMS

A. Cleaning: Before erection, all interior pipe, tubing, valves and fittings (except those expressly cleaned for carbon dioxide, compressed air, vacuum, inert/specialty and mixed gas services by manufacturers) shall be thoroughly cleaned of all oil, grease, or other combustible materials by washing in hot solution of sodium carbonate or trisodium phosphate mixed in equal proportions of one pound to three gallons of water. Pipe and fittings to be capped at all times to prevent contamination. Scrubbing and continuous agitation of the parts shall be employed where necessary to remove all deposits and insure complete cleansing. After washing, all materials shall be rinsed thoroughly in clean hot water. After cleansing, great care must be exercised in the storage and handling of all materials and in the condition of tools used in cutting or reaming to prevent oil or grease being introduced into the tubing. Where such contamination is known to have occurred, the materials affected must be rewashed and then rinsed.

B. Pipe and Tubing Joints: All joints in the pipe and tubing, except those at equipment requiring screwed connections, shall be made with braze joint type wrought fittings. Suitable adapters shall be employed for the installation of equipment provided with threaded connections. All brazed connections shall be made with the type of brazing alloy and flux specified in "Piping Materials". The joining process shall be those recommended by the manufacturer of the pipe and tubing and the fittings. Brush flux back over entire end of the fitting all around. This prevents oxidation of the end. Wash joints with hot water after assembly to crack and wash off flux. Use a wire brush, if necessary.

C. Furnish and install any and all valves including purge valves, required to isolate sections of the piping systems extending into areas for construction at a later date. Provide all valves to properly test each system with respect to the construction phasing and as essentially indicated on the drawings. Remove all main and branch line valve handles at completion of work and as directed by the Owner. Provide all required adapters, valves, and interconnecting tubing required to perform the specialty gas testing as required by the Owner. Identify all isolation and phasing valves as such and indicate on tag or plastic sign that valve is to remain open and that facilities department is to be notified if closed.

D. Bends: All changes in direction requiring turns or offsets or radiuses less than five times the pipe or tubing outside diameter shall be made by Walseal or braze-type wrought fittings.

3.6 TESTING OF LABORATORY GASES, COMPRESSED AIR AND VACUUM SYSTEMS

A. General

1. This Contractor shall provide testing of the complete installation of all laboratory gases, compressed air and vacuum systems from their cylinders, compressors, pumps or points of new pipe line connections to new and existing equipment and outlets.

2. This Contractor is to provide purge valves and isolation valves at all dead ends and points of connections to piping systems or at all phasing break points for the proper execution of the testing, blowing out and purging. Purge valves to consist of 3/8-inch ball valves with a threaded end capped adapter.

3. All tests shall be observed by a representative of the Owner. This Contractor shall be responsible for supplying the bottled gas, gauges, adapters, analyzer and all other necessary equipment to conduct these tests. Final testing, outlet flow analysis, outlet concentrations, pressure verification and overall system operation shall be performed and certified by an independent approved gas testing laboratory. This Contractor to submit test report and results to Architect/Engineer or his representative for verification. Also, this Contractor is to submit to the Architect for approval, the testing laboratory he intends to use for the gas certification. The submission is to include a complete listing and sequence of the proposed testing procedure to be used including which standards are to be followed, which order the outlets are to be tested, the parameters of the flow tests, and the equipment to be used to perform the tests.

B. Blowdown

1. After installation of the piping, but before installation of the outlet valves and gauges, the line for each installed gas system shall be blown clear of particulate contamination by means of oil free dry Nitrogen.

C. Pressure Test

1. Before attachment of system components, such as pressure actuating switches for alarms, manifolds, pressure gauges, relief valves, etc., but after installation of the laboratory gas, terminations and compressed air and vacuum outlets, with rest caps in place, and before closing of the walls and ceilings, each piping system shall be subjected to a minimum test pressure of 150 psig with oil free dry air or nitrogen. This test shall be maintained until each joint has been examined for leakage by means of soapy water or other equally effective means of leak detection safe for use with oxygen.

2. Leaks, if any, shall be repaired and the section retested.

D. Final Pressure Test

1. After testing of each individual system as specified above, the assembled station outlet valves and all other system components such as pressure actuating switches for alarms, manifolds, pressure gauges, relief valves, shall be installed

and all laboratory gas piping systems shall be subjected to a 24-hour standing pressure test at 20% above normal line pressure.

E. Final Tests

1. The following tests shall be performed after installation of all gas systems is complete and shall provide final testing and certification of the systems.

F. Labeling

1. All gas outlets and gauges shall be verified to incorporate proper labeling for gas and vacuum service, function and room or area control.

3.7 RO/DI WATER DECONTAMINATION

A. This Contractor shall be responsible for final decontamination of the complete RO/DI system including existing loop piping. Decontamination method shall be in accordance with Owner's requirements.

B. The chemical disinfectant "Minncare" or equal shall be used. The dilution dosage shall be 0.5% minimum to 3.0% maximum. The dilution must be calculated and recorded on log sheets. The contact time shall be 24 hours.

C. Contractor shall perform microbiological testing prior to decontamination.

D. The mixed bed deionizers shall be bypassed or disconnected.

E. The ultra-violet sterilizers shall be turned off.

F. Contractor shall change filters and clean housing.

G. Add the appropriate amount of disinfectant to the storage tank to circulate the disinfectant through the loop. All use points shall be opened briefly to expose decontamination solution. Minncare shall be verified at each point of use by using a test strip.

H. Shut down the distribution pump and isolate the loop to maintain solution contact time.

I. After 24 hours, the tank shall be drained and rinsed. The loop return shall be diverted to drain and the rinse water shall be checked for positive oxidant response.

J. Tank shall be filled with RO water and the mixed beds connections shall be flushed with clean RO water.

K. The mixed beds shall be recommended to the system only after no decontamination solution is detected.

L. The pumps and the UV sterilizers shall be turned on and the loop shall be slowly pressurized.

M. All use points shall be flushed clean.

N. The loop return diverted to drain shall be run until it is free of decontamination solution and then reconnected to the tank. After the system is running for one hour, all use points shall be flushed.

3.8 FINAL ADJUSTMENTS AND BALANCING

A. Upon completion of installation and equipment start-up, adjust systems to within operation parameters, temperatures, pressures and flows. Include adjustments to pressure relief valves, pressure regulating valves, temperature control valves for water systems, and verify normally closed/open valve positions.

B. The RODI distribution system control valves (pressure regulating and back pressure regulating) shall be adjusted to assure that all design pressures and flows are met. Multiple points of use shall be open simultaneously on each floor to assure that adequate pressure and flow are met at each system point of use. The distribution pump pressure shall also be adjusted to meet the total building flow and pressure demands.

END OF SECTION 226000

SECTION 230500 – BASIC MECHANICAL MATERIALS AND METHODS

PART 1 – GENERAL

1.1 PROVISIONS INCLUDED:

A. Include General Conditions.

B. Supplementary General Conditions

C. Division 0 “Procurement and contracting Requirements”.

D. Division 01 “General Requirements”.

E. Division 02 “Existing Conditions”.

F. See Division 21 for Fire Protection

G. See Division 22 for Plumbing.

H. See Divisions 26, 27 and 28 for Electrical.

I. Division 50 Commissioning and requirements which may affect the work of this Section.

J. Examine all other Sections of the specifications for requirements which affect work under this Section whether or not such work is specifically mentioned in this Section.

K. Coordinate work with that of all other Trades affecting, or affected by work of this Section. Cooperate with such Trades to ensure the steady progress of all work under the Contract.

1.2 DEFINITIONS

A. Words in the singular shall also mean and include the plural, wherever the context so indicates and words in the plural shall mean the singular, wherever the context so indicates.

B. Wherever the terms "shown on drawings" are used in the specifications, they shall mean "noted", "indicated", "scheduled", "detailed", or any other diagrammatic or written reference made on the drawings.

C. Wherever the term "provide" is used in the specifications it will mean "furnish" and "install", "connect", "apply", "erect", "construct", or similar terms, unless otherwise indicated in the specifications.

D. Wherever the term "material" is used in the specifications it will mean any product", "equipment", "device", "assembly", or "item" required under the Contract, as indicated

by trade or brand name, manufacturer's name, standard specification reference or other description.

E. The terms "approved", or "approval" shall mean the written approval of the Architect.

F. The term "specification" shall mean all information contained in the bound or unbound volume, including all "Contract Documents" defined therein, except for the drawings.

G. The terms "directed", "required", "permitted", "ordered", "designated", "prescribed" and similar words shall mean the direction, requirement, permission, order, designation or prescription of the Architect. The terms "approved", "acceptable", "satisfactory" and similar words shall mean approved by, acceptable or satisfactory to the Architect. The terms "necessary", "reasonable", "proper", "correct" and similar words shall mean necessary, reasonable, proper or correct in the judgment of the Architect.

H. "Piping" includes in addition to pipe or mains, all fittings, flanges, unions, valves, strainers, drains, hangers and other accessories relative to such piping.

I. "Concealed" means hidden from sight in chases, furred spaces, shafts, hung ceilings, embedded in construction or in crawl spaces.

J. "Exposed" means not installed underground or "concealed" as defined above.

K. "Invert Elevation" means the elevation of the inside bottom of the pipe.

L. "HVAC, Plumbing, and/or Fire Protection Contractor" shall refer to the Contractor or his Subcontractors responsible for furnishing and installation of all work indicated on the HVAC, Plumbing, and/or Fire Protection drawings and specifications, as applicable and or referenced to each Trade in the Architectural and/or Structural documents.

M. "Mechanical Contractor" shall refer to the Fire Protection, Plumbing, HVAC and ATC Contractors, as applicable.

N. "Architect" shall refer to the Architect "Mitchell/Giurgola Architects" and/or Engineer "Bard, Rao + Athanas Consulting Engineers, PC" and/or Owner.

O. "Owner" shall refer to the designated representatives of the Project Owner.

P. "General Contractor" shall refer to the Contractor(s) performing work under other sections of the Contract Specifications.

Q. "Construction Manager" shall refer to the Construction Manager (CM) "Fusco" for this project.

R. “Commissioning Agent (CA)” shall refer to the party employed by the Owner to witness the demonstration of all systems according to the commissioning plan. Refer to Division 50.

1.3 CODES, STANDARDS AND REFERENCES

A. LEED Building General Requirements: The Owner requires the Contractor to implement practices and procedures to meet the project's environmental performance goals, which include achieving LEED Certification. Specific project goals that may impact this area of work include: Use of recycled-content materials; use of locally-manufactured materials; use of low-emitting materials; construction waste recycling; and the implementation of a construction indoor air quality management plan. The Contractor shall ensure that the requirements related to these goals, as defined in the sections below, are implemented to the fullest extent. Substitutions, or other changes to the work proposed by the Contractor or their Subcontractors, shall not be allowed if such changes compromise the stated LEED Building Performance Criteria.

1. Comply with LEED (Leadership in Energy and Environmental Design) Green Building Rating System BD+C, Version 3.

B. Section 017419 "Construction Waste Management and Disposal" for requirements related to construction waste management and disposal at the project site.

C. Section 018113 "VOC Limits for Adhesives, Sealants, Paints and Coatings" for restrictions of VOC in adhesives, sealants, paints and coatings.

D. Section 018119 "Construction Indoor Air Quality (IAQ) Management" for requirements during construction for indoor-air-quality management.

E. All materials and workmanship shall comply with all applicable Codes, Specifications, Local and State Ordinances, Industry Standards and Utility Company Regulations, latest editions.

F. In case of difference between Building Codes, State Laws, Local Ordinances, Industry Standards and Utility Company Regulations and the Contract Documents, the Mechanical Contractor, as applicable, shall promptly notify the Architect in writing of any such difference.

G. In case of conflict between the Contract Documents and the requirements of any Code or Authorities having jurisdiction, the most stringent requirements of the aforementioned shall govern for budgetary purposes. However, no work will proceed until the Architect determines the correct method of installation.

H. Should any Contractor, as applicable, perform any work that does not comply with the requirements of the applicable Building Codes, State Laws, Local Ordinances, Industry Standards and Utility Company Regulations, he shall bear all costs arising in correcting the deficiencies, as approved by the Architect.

I. Applicable Codes and Standards shall include all State Laws, Local Ordinances, Utility Company Regulations and the applicable requirements of the following accepted Codes and Standards, without limiting the number, as follows:

1. National Electrical Code (NEC)

2. Environmental Protection Agency (EPA)

3. Connecticut Environmental Air Quality Protection Agency

4. Connecticut Energy Code

5. Connecticut Building Code (Latest Adopted Edition), including all adopted Supplements

6. Connecticut Fire Prevention Regulations and Elevator Regulations

7. Local Ordinances, Regulations of the Local Building Department and Fire Department

8. Recommendations of the National Fire Protection Association (NFPA), latest applicable edition adopted, in general and in particular:

    a. Life Safety, NFPA 101

    b. HVAC, NFPA 90A, 90B

    c. Removal of Smoke and Grease Laden Vapors from Commercial Cooking Equipment, NFPA 96

9. Recommendations of ASHRAE (American Society of Heating, Refrigeration and Air Conditioning Engineers), including:

    a. ASHRAE 90.1

    b. ANSI/ASHRAE 62-Ventilation for Acceptable Indoor Air Quality

    c. ANSI/ASHRAE 15-Safety Code for Mechanical Refrigeration

    d. ANSI/ASHRAE 110-Method of Testing Performance of Laboratory Fume Hoods

    e. ANSI/ASHRAE 55-Thermal Environmental Conditions for Human Occupancy

10. In addition to the above Codes and Standards, the research laboratory systems will also be based on the specific requirements and/or recommendations of the following as they relate to laboratory systems:

    a. Occupational Safety and Health Administration (OSHA) S29 CFR Part 1910, Health and Safety Standards; Occupational Exposures to Toxic Substances in Laboratories; Proposed Rule. Federal Register July 24, 1986

    b. ANSI/AIHA Z9.5 American National Standard for Laboratory Ventilation

    c. NFPA 45 - Standard on Fire Protection for Laboratories Using Chemicals, Chapters, 9-2.8, 9-2.9

d. NFPA 56 - Safety Standard for Laboratories in Health-Related Institutions, Chapter 3-3.5

e. Scientific Apparatus Makers Association (SAMA)

f. National Cancer Institute - Safety Standards for Research Involving Chemical Carcinogens

g. National Research Council - Prudent Practices of Handling Hazardous Chemicals in Laboratories

h. National Safety Council - Fundamentals of Industrial Hygiene

i. National Institute of Health

J. In these specifications, references made to the following Industry Standards and Code Bodies are intended to indicate the accepted volume or publication of the Standard. All equipment, materials and details of installation shall comply with the requirements and latest revisions of the following Bodies, as applicable:

1.	AMCA	Air Moving and Conditioning Association
2.	ANSI	American National Standards Institute
3.	ARI	American Refrigeration Institute
4.	ASHRAE	American Society of Heating, Refrigeration and Air Conditioning Engineers
5.	ASME	American Society of Mechanical Engineers
6.	ASTM	American Society of Testing Materials
7.	AWS	American Welding Society
8.	CS	Commercial Standards, U.S. Department of Commerce
9.	FM	Factory Mutual
10.	FS	Federal Specification, U.S. Government
11.	MSS Industry	Manufacturers Standardization Society of the Valve and Fittings
12.	NEMA	National Electrical Manufacturers Association
13.	SMACNA Association	Sheet Metal and Air Conditioning Contractor's National
14.	UL	Underwriters' Laboratories, Inc.

K. Each Contractor for the work under his charge, shall give all necessary notices, obtain and pay for all permits, pay all governmental taxes, fees and other costs in connection with his work; file for necessary approvals with the jurisdiction under which the work is to be performed. Each Contractor shall obtain all required Certificates of Inspection for his work and deliver same to the Architect before request for acceptance of his portion of work and before final payment is made.

L. All equipment shall be installed per manufacturer's recommendations and requirements. The Contractor shall notify the Engineer in writing when they intend to deviate from manufacturer's installation guidelines. The Engineer shall advise if the installation is acceptable prior to installation.

1.4 SUBMITTALS

A. Submit detailed shop drawings or brochures for approval of equipment and material proposed to be used on this project. Furnish the number of copies required by General Conditions.

B. Documents submitted shall show the following:

1. Principal dimensions and details of construction.

2. Operating and maintenance clearances.

3. Weights of principal parts and total weights with information required for the design of supports and foundations.

4. Sizes and location of piping and connections.

5. Performance data, including pump and fan curves; sound data including sound power dB levels in 1/3 octave bands.

6. Data on electric motors, including brake horsepower of driven equipment, nameplate ratings and classes, sound data, starting and running full load currents, required starter size and recommended overload heater ratings.

7. Approval stamp of Underwriters' and other authorities having jurisdiction of Contract Drawings requiring such approval.

8. Certified performance guarantees.

9. Calculations and details for refrigeration for field assembled systems including description of specialties and pressure drops, layout of piping with lengths fittings, and refrigerant specialties, and capacity curves for evaporator and compressor showing balance points.

10. Minimum scale for sheet metal plans and piping plans shall be ¼ inch equal 1 foot.

C. Submit brochures that contain only that information which is relative to the particular equipment or materials to be furnished. Do not submit catalogs that describe several different items other than those items to be used unless irrelevant information is marked out and relevant material is clearly marked.

D. Specifications Compliance Statement

1. The manufacturer shall submit a point by point statement of compliance with the specifications.

2. The statement of compliance shall consist of a complete copy of the project specifications with a line by line compliance statement.

3. Where the proposed system complies fully, such shall be indicated by placing the word "comply" opposite the line or paragraph number.

4. Where the proposed system does not comply, or accomplishes the stated function in a manner different from that described, a full description of the deviation shall be provided.

5. Where a full description of a deviation is not provided, it shall be assumed that the proposed system does not comply with the paragraph in question.

6. Submissions which do not include a point by point statement of compliance as specified shall be disqualified.

1.5 GUARANTEE

A. Attention is directed to provisions of the General Conditions and Supplementary General Conditions regarding guarantees and warranties for work under this Contract.

B. Manufacturers shall provide their standard guarantees for work under this Contract, unless specified otherwise. However, such guarantees shall be in addition to and not in lieu of all other liabilities which the manufacturer and CM may have by Law or by other provisions of the Contract Documents. In any case, such guarantees and warranties shall commence when the Owner accepts the various systems, as applicable and as determined by the Architect. The guarantees and warranties will remain in effect for a minimum period of (1) year thereafter except where longer periods are specifically stated and specified.

C. All materials, items of equipment and workmanship furnished under HVAC, shall carry the warranty against all defects in material and workmanship. Any fault due to defective or improper material, equipment, workmanship or design which may develop shall be made good, forthwith, by and at the expense of the Contractor responsible, including all other damage done to areas, materials and other systems resulting from this failure.

D. Each Contractor shall guarantee that all elements of the systems provided under his Contract, are of sufficient capacity to meet the specified performance requirements as set forth herein or as indicated on the drawings.

E. Upon receipt of notice from the Owner of failure of any part of the systems or equipment during the guarantee period, the affected part or parts shall be replaced by the responsible Contractor.

F. Each Contractor shall furnish, before the final payment is made, a written guarantee covering the above requirements.

1.6 COMMISSIONING

A. The TBA Contractor must also include sufficient man-hours within their bids, for their participation with the Commissioning Team and the rebalancing/readjusting/resetting all device setpoints, as required. For additional work, refer to Division 50.

1.7 THE CONTRACTOR

A. Each Contractor shall study all Contract Documents (HVAC, Plumbing, Fire Protection, Electrical, Communications, Architectural, Structural), etc., included under each Contract, to determine exactly the extent of work to be provided under each Section, and in installing new equipment and systems and coordinating the work with the other Trades and existing conditions.

B. Each Contractor shall faithfully execute his work according to the terms and conditions of the Contract and specifications and shall take all responsibility for and bear all losses resulting to him in the execution of his work.

C. Each Contractor shall be responsible for the location and performance of work provided under his Contract as indicated on the Contract Documents. All parties employed directly or indirectly by each Contractor shall perform their work according to all the conditions as set forth in these specifications.

D. Each Contractor shall furnish all materials and perform all work in accordance with the project specifications and any supplementary documents provided by the Architect. The work shall include every item shown on the drawings and/or required by the specifications as interpreted by the Architect. All work and materials furnished and installed shall be new and of the best quality and workmanship. Each Contractor shall cooperate with the Architect so that no error or discrepancy in the Contract Documents shall cause defective materials to be used or poor workmanship to be performed.

1.8 COORDINATION OF WORK

A. Each Contractor shall compare his drawings and specifications with those of other Trades and report any discrepancies between them to the Architect and obtain from the Architect written instructions for changes necessary in the mechanical or electrical work, to ensure that all work is installed in coordination and cooperation with other Trades installing interrelated work. Before installation, each Contractor shall make

proper provisions to avoid interferences in a manner approved by the Architect. All changes required in the work of each Contractor caused by his negligence, shall be corrected by him at his own expense, to the Architect's satisfaction.

B. Locations of piping, ductwork, conduits and equipment shall be adjusted to accommodate the new work with interferences anticipated and encountered during installation. Each Contractor shall determine the exact routing and location of his systems prior to fabrication or installation of any system component. Accurate measurements and coordination drawings will have to be completed to verify dimensions and characteristics of the various systems' installations.

C. Lines which pitch shall have the right-of-way over those which do not pitch. For example, waste piping shall normally have the right-of-way. Lines whose elevations cannot be changed shall have the right-of-way over lines whose elevations can be changed.

D. Offsets, transitions and changes of direction in all systems shall be made as required to maintain proper headroom and pitch of sloping lines whether or not indicated on the drawings. Each Contractor shall provide manual air vents and drains as required for his work to affect these offsets, transitions and changes in direction, as applicable.

E. All work shall be installed in a way to permit removal (without damage to other parts) of coils, filters, control appurtenances, fan shafts and wheels, filters, belt guards, sheaves and drives and all other system components provided under this Contract requiring periodic replacement or maintenance. All piping shall be arranged in a manner to clear the openings of swinging overhead access doors, ceiling tiles and cleaning access doors in ductwork.

1. Access to any and all components requiring servicing, adjustment, calibration, maintenance or periodic replacement shall be provided so that the Owner's operations personnel can freely gain access without removal of any materials other than the access panel or ceiling tile. Access shall be understood to mean free, clear and unobstructed from the floor up to the device and/or component being serviced. Access panels for VAV/CV boxes shall be 24" x 24" minimum.

2. Fire rated access doors with closers shall be provided for all rated assemblies.

F. The Contract Drawings are diagrammatic only intending to show general runs and locations of piping, ductwork, equipment, terminals and specialties and not necessarily showing all required offsets, details and accessories and equipment to be connected. All work shall be accurately laid out with other Trades to avoid conflicts and to obtain a neat and workmanlike installation which will afford maximum accessibility for operation, maintenance and headroom.

G. Where discrepancies in scope of work as to what Trade provides items, such as starters, disconnects, flow switches, electric control components, etc., exist, such conflicts shall be reported to the Architect prior to signing of the Contract. If such action is not taken, each Contractor, as applicable, shall furnish such items as part of his work, for complete and operable systems and equipment, as determined by the Architect.

H. Where drawing details, plans and/or specification requirements are in conflict and where pipe or duct sizes of same pipe or duct run are shown to be different between plans and/or between plans and sections or details, the most stringent requirement will be included in the Contract. HVAC systems and equipment called for in the specification and/or shown on the drawings shall be provided under this Contract as if it were required by both the drawings and specifications. However, prior to ordering or installation of any portion of work which appears to be in conflict, such work shall be brought to Architect's attention for direction as to what is to be provided.

I. Final location of all air distribution devices, thermostats, heaters, control devices, sprinkler heads, etc., shall be coordinated with the Architectural reflected ceiling plans and/or other Architectural details, as applicable. (**Note**: Sprinkler head locations shall provide the specified coverage rating and water flow density, and shall be in accordance with all applicable Codes and in full compliance with the requirements of the Owner's insurance carrier.) Offsets of ductwork, added sheet metal, fittings, elbows, flexible connections, etc., shall be provided as required to comply with the Architectural reflected ceiling plans and/or installation details. Obtain approval of locations of all devices from Architect in the field, prior to installation.

J. Hoods, dishwashers, etc., or other type of equipment shown on the Plumbing, Fire Protection, HVAC and/or Architectural drawings to be provided with services, such as exhaust ductwork, piping, traps, drains, valves, etc., shall be included under this Contract as applicable, including all piping or ductwork connections to systems, to make equipment completely operable. Additional sheet metal, flexible fittings, etc., shall be provided to accomplish the above requirement, as required, all as part of this Contract, at no additional cost to the Owner.

1.9 COORDINATION DRAWINGS

A. Before materials are purchased, fabricated or work is begun, each Contractor shall prepare coordination drawings for all floors/areas, including buried systems/services (all-Trade-composite at ¼" scale), showing the size and location of his equipment and lines, in the manner described herein under General Requirements.

B. Coordination drawings are for the CM and Architect's use during construction and shall not be construed as shop drawings or as replacing any shop drawings. The coordination drawings, when corrected for actual "as-built" conditions, will be reviewed by the Architect, corrected and become the Record Drawings to be submitted to the Owner for his use.

C. The cost of producing and reproducing the drawings will be included under the Contract of each Trade, including the cost or preparation of the Architectural building outlines. This process may include multiple revisions to these drawings which will be included in the cost. The intent is to provide a fully coordinated set of documents between trades no matter how many times they may have to be redone. The HVAC Contractor shall take the lead to produce the Architectural backgrounds, show all ductwork, piping, etc., and circulate the drawings to any of his Subcontractors and the other Trades (Plumbing, Fire Protection, Electrical), so that they can indicate all their

work as directed by the CM and Architect as required, to result in a fully coordinated installation.

D. In addition to the regular coordination drawing review, the mechanical work will also be reviewed by the Architect/Engineer to ensure that the system and equipment arrangements are suitable to provide maintenance access and service as follows:

1. Valves and instrumentation should be grouped where possible and positioned in accessible locations.

2. Valves on pipes of 6" and larger, positioned above 7'-0" in height from the operating level, will be provided with chain operated valve wheels and be located where chains will not interfere with primary access through the mechanical room.

3. Location of control/diagnostic panels shall be shown and identified on the mechanical room coordination drawings.

E. Prepare a complete set of computer based drawings:

1. Format shall be:

a. REVIT (Latest Version)

2. Scale not less than ¼" scale equals 1'-0", showing basic layout for the structure and other information as needed for preparation of Coordination Drawings.

3. The drawings shall indicate the layout of all specialty tradework as indicated herein and shall be designated as Coordination Drawings.

4. Any drawing provide to assist the contractor will require:

a. A signed liability release form will be required from the Contractor prior to the release of the disk from the Engineer.

5. For 3-D projects see Section 230510 “3D Building information” for additional information

F. Highlight all fire rated partitions on the Coordination Drawings for appropriate coordination.

G. The main paths for the installation or removal of equipment from mechanical and electrical rooms shall be clearly indicated on the Coordination Drawings.

H. Each of the specialty trades shall add its work to the base drawings with appropriate elevations and grid dimensions. Specialty trade information shall be required for fan rooms and mechanical rooms, horizontal exits from duct shafts, crossovers and for spaces it the above ceilings where congestion of work may occur such as corridors and, where required, entire floors. Drawings shall indicate horizontal and vertical

dimensions to avoid interference with structural framing, ceilings, partitions and other services. Indicate elevations relative to finish floor for bottom of ductwork and piping and conduit 6" greater in diameter.

1. Specialty Trade shall include:

    a. Plumbing system.

    b. HVAC piping and associated control systems.

    c. Electrical.

    d. Sheet Metal Work.

    e. Fire Protection system.

    f. Automatic Temperature Control

    g. Fire Alarm

    h. Security

    i. Telecommunications

    j. Pneumatic Tube

    k. Commissioning

I. Upon completing their portion of the Coordination Drawings, each specialty trade shall sign, date and return Coordination Drawings to the Contractor.

J. Where conflicts occur with placement of materials of various trades, the General Contractor shall be responsible to coordinate the available space to accommodate all trades. Any resulting adjustments shall be initialed and dated by the affected specialty trade Subcontractor. The General Contractor shall then final date and sign each drawing.

K. Fabrication shall not start until Coordination Drawings have been distributed to all parties as indicated herein.

L. Distribution of Coordination Drawings:

1. The General Contractor shall provide one print of each Coordination Drawing to:

    a. Each specialty trade Subcontractor.

    b. Owner.

    c. General Contractor.

d. Architect (for record purposes).

M. After distribution:

1. Resolve all interference's not previously identified.

N. Coordination Drawings include but are not necessarily limited to:

1. Structure.

2. Partition/room layout, including indication of smoke and fire resistance rated partitions.

3. Ceiling layout and heights.

4. Light fixtures.

5. Access panels.

6. Sheet metal, heating coils, heat pumps, grilles, diffusers, etc.

7. All heating piping and valves.

8. Smoke and fire dampers.

9. Soil, waste and vent piping.

10. Major water and gases.

11. Major electrical conduit runs, panelboards, feeder conduit and racks of branch conduit. Motor control centers, starters and disconnects.

12. Sprinkler piping and heads.

13. All equipment, including items in the Contract as well as O.F.C.I. and O.F.I. items.

14. Equipment located above finished ceiling requiring access for maintenance and service. In locations where acoustical lay-in ceilings occur indicate areas in which the required access area may be greater than the suspected grid systems.

15. Rainwater Piping.

16. Existing conditions, including, but not limited to, Mechanical, Plumbing, Fire Protection and Electrical items.

17. ATC panels.

O. The Architect's response to all requests for information (RFI's) generated by the trade contractors shall be distributed to all other affected trades as if this information was

contained in the original contract documents. In other words, the party that issues an RFI is responsible for distributing the information to all affected parties.

1.10 RECORD DRAWINGS

A. Each Contractor shall maintain, current at the site, a set of Contract Drawings for his portion of the work on which he shall accurately show the actual installation of all work provided under his Contract indicating any variation from the Contract Drawings, in accordance with the General Conditions and Supplementary General Conditions. Changes whether resulting from formal change orders, requests for information, or other instructions issued by the Architect shall be recorded. Include changes in sizes, location and dimensions of piping, ducts, equipment, etc.

B. Each Contractor shall indicate progress by coloring-in various pipes, ducts and associated appurtenances exactly as they are erected. This process shall incorporate both the changes noted above and all other deviations from the original drawings whether resulting from job conditions encountered or from any other causes.

C. The marked-up and colored-up prints will be used as a guide for determining the progress of the work installed. They shall be inspected periodically by the Architect and Owner's representatives and they shall be corrected if found either inaccurate or incomplete. This procedure is mandatory. Marked up drawings shall include all flow diagrams, schedules, details and control diagrams.

D. Each Contractor shall meet at a minimum on a monthly basis, with the Owner's representative to transfer the information from his HVAC, Plumbing, Fire Protection, etc., marked-up and colored-up prints to a set which will become the basis for preparation of as-built drawings.

E. Upon completion of the project, each Contractor shall submit his marked-up drawings to the Architect for review and comment. After the Architect reviews and comments on this set of documents, each Contractor shall prepare as-built drawings on CAD using the format specified for coordination drawings. When the work is completed, each Contractor shall provide 2 hard copies to the Architect for submittal to the Owner and disks with all documentation and a set of reproducible drawing plots marked "As-Built" drawings. The Contractor shall bear all costs of producing the CAD "As-Built" drawings, providing all necessary drawing changes and printing the reproducible drawings for the work under his charge.

1.11 GIVING INFORMATION

A. Each Contractor shall keep himself fully informed as to the shape, size and position of all openings required for his apparatus and shall give information to the Architect and other Contractors **[or Subcontractors]** sufficiently in advance of the work so that all openings may be built in advance.

B. The manufacturers listed within this specification have been preselected for use on this project. No submittal will be accepted from a manufacturer other than those specified. Should any Contractor wish to propose a substitution during the bid period, such

request shall be made in writing to the Architect, at least (15) working days, prior to bid date. If substitutions are deemed acceptable, such items shall be issued as an Addendum, prior to bid due date. The above requirement is mandatory.

1.12 EQUIPMENT AND MATERIALS

A. Equipment and materials shall be delivered to the site and stored in original sealed containers, suitably sheltered from the elements, but readily accessible for inspection by the Architect until installed. All items subject to moisture damage such as controls, filters, etc., shall be stored in dry, heated spaces.

B. Each Contractor shall have his equipment tightly covered and protected against dirt, water and chemical or mechanical injury and theft. At the completion of the work, equipment and materials shall be cleaned, polished thoroughly and turned over the Owner in a condition satisfactory to the Architect. Damage or defects developing before acceptance of the work shall be made good at each Contractor's [or Subcontractor's] expense as applicable.

C. Each Contractor shall make necessary field measurements to ascertain space requirements, for equipment and connections to be provided under his Trade and shall furnish and install such sizes and shapes of equipment to allow for the final installation to conform to the drawings and specifications.

D. Manufacturers' directions shall be followed completely in the delivery, storage, protection and installation of any equipment. Promptly notify the Architect in writing of any conflict between any requirements of the Contract Documents and the manufacturer's directions and obtain the Architect's written instructions before proceeding with the work. Should any Contractor perform any work that does not comply with the manufacturer's directions or written instructions from the Architect, he shall bear all costs arising in correcting any deficiencies that should arise.

E. Each Contractor shall furnish and install all equipment, accessories, connections and incidental items necessary to fully complete the work under his Contract for use, occupancy and operation by the Owner.

F. Where equipment of the acceptable manufacturers requires different arrangement or connections from those shown, it shall be the responsibility of each Contractor to install the equipment to operate properly and in harmony with the original intent of the drawings and specifications. When directed by the Architect, each Contractor shall submit drawings showing the proposed installation. If the proposed installation is approved, each Contractor shall make all necessary changes in all effected related work provided under other Sections including location of roughing-in connections by other Trades, electrical requirements, piping, supports, insulation, etc. All changes shall be made at no increase in the Contract amount or additional cost to the other Trades and/or Owner.

G. Testing Agency Labeling Requirements

1. All equipment and materials required for installation under these specifications shall be new and without blemish or defect.

2. Equipment and materials shall be products which will meet with the acceptance of the Authorities Having Jurisdiction over the work and as specified hereinbefore.

3. Where such acceptance is contingent upon having the FM Global, it shall be provided with FM Global label. Factory manufactured and assembled packaged equipment, such as the examples of equipment listed below, shall have the entire assembled package inspected and Labeled by Factory Mutual.

4. All equipment shall meet OSHA standards.

5. All products shall be listed and labeled by UL or other national testing laboratories such as ETL and the products shall be so labeled.

    a. Label of Underwriter's Laboratories, ETL or other nationally recognized testing agency acceptable to the Authorities Having Jurisdiction.

    b. This Labeling shall include not just the control panel and/or motor but all wiring and devices included in the package as a complete package. Note: Providing a series of individually labeled electrical devices that are then assembled into a package does not meet this requirement, the whole assembly must be labeled as an assembly. The manufacturers have the option of having the equipment inspected and Labeled at the factory or at the site after installation. This requirement shall supersede any other specification language hereinbefore or hereinafter that requires only portions of the equipment to be labeled.

    c. Some examples of packaged equipment requiring Labeling:

        1) Sump pumpsets
        2) Ejector pumpsets
        3) Laboratory waste ejector pumpsets
        4) Fuel oil transfer pump skids
        5) Steam condensate pumpsets
        6) Duplex air compressor system
        7) Air handling units (packaged and custom built-up)
        8) Cooling towers
        9) Chillers
        10) Feed water equipment
        11) pH Neutralization system skids
        12) High purity water system skids (such as RODI units)
        13) Laboratory and/or Medical Air compressor skids
        14) Vacuum pumpsets
        15) Water pressure booster systems
        16) Animal watering system skids
        17) Cooling tower water filtration system

6. HVAC/Smoke Control System Operation

a. On/Auto/Off switches and status indicators (LEDS) shall be provided for monitoring and manual control of each fan, damper, HVAC control unit, stairwell pressurization fan, space pressurization and smoke exhaust fan. To ensure compliance, the units supplied shall meet the following **UL categories: UUKL, PAZX, UDTZ, QVAX** as well as the requirements of NFPA 90A, HVAC, and NFPA 92A & 92B, Smoke Control. The control system shall be field programmable for either 90A operation or 92A/B operation to allow for future use and system expansion.

b. All devices shall be UUKL listed.

H. All equipment of one type (such as valves, fans, air handling units [custom built], air terminals, heat pumps, plumbing fixtures, etc.), shall be the product of one manufacturer.

I. Equipment pre-purchased on behalf of the Owner or by the Owner himself, if assigned to any of the Contractors, shall be received, inspected, installed, etc., as if it was purchased by the Contractors as applicable. All guarantees, service contracts, etc., shall be the same as for all other equipment provided under this Contract.

1.13 CUTTING AND PATCHING

A. Each Contractor shall be responsible for all core drilling, as required for work under his Contract, but in no case shall he cut into any structural elements without the written approval of the Architect.

B. All cutting, rough patching and finish patching, shall be provided under this Contract.

C. All concrete and masonry equipment bases shall be provided under this Contract.

1.14 USE OF PREMISES

A. Each Contractor shall confine all of his apparatus, storage of materials and construction to the limits indicated on the drawings and directed by the Architect and he shall not encumber the premises with his materials.

B. In storing materials within areas (structure or ground), or when used as a shop, each Contractor shall consult with the Construction Manager and shall restrict his storage to space designated for such purposes. Each Contractor will be held responsible for repairs, patching or cleaning arising from any unauthorized use of premises.

C. Notwithstanding any approvals or instructions which must be obtained by each Contractor from the Architect in connection with use of premises, the responsibility for the safe working conditions at the site shall remain each Contractor's. The Architect or Owner shall not be deemed to have any responsibility or liability in connection therewith.

D. Air handling unit or cooling tower sections shall not be used for storage of materials. The HVAC Contractor will be responsible for securing, and maintaining the equipment clean. The above requirement is mandatory.

1.15 PROTECTION/CLEANLINESS

A. All materials such as valves, fittings, piping, ductwork, plenums, grilles, registers, diffusers, etc., shall be properly protected from the accumulation of dirt, dust, debris or any other contaminants. All ductwork and piping openings shall be temporarily closed by each Contractor **[or Subcontractor]** installing same, so to prevent obstruction and damage, as a minimum at the end of each working day or more often if required by job conditions. Each Contractor shall take precautions to protect his materials from damage and theft.

B. Each Contractor shall furnish, place and maintain proper safety guards for the prevention of accidents that might be caused by the workmanship, materials, equipment or electrical systems provided under his Contract.

1.16 DAMAGE CORRECTION AND EXTRA WORK

A. Each Contractor shall be held responsible and shall pay for all damages caused by his work to the new and existing building structures and new and existing equipment, piping, duct systems, etc., and all work and finishes installed under this Contract in the new or in existing building. Repair of such damage shall be done as herein before specified, at the expense of each Contractor and to the Architect's satisfaction.

B. Each Contractor shall promptly correct all work provided under his Contract and rejected by the Architect as defective or as failing to conform to the Contract Documents whether observed before or after completion of work and whether or not fabricated, installed or completed. Each Contractor shall bear all costs of correcting such rejected work.

C. No claim for extra work will be allowed unless it is authorized by the Architect in writing before commencement of the extra said work.

1.17 TOUCH-UP PAINTING

A. Each Contractor shall thoroughly clean all equipment and systems provided under this Contract from rust, splatters and other foreign matter or discoloration, leaving every part of each system in an acceptable prime condition. Each Contractor, for the work under his Contract, shall refinish and restore to the original condition all equipment and piping which has sustained damage to the manufacturer's prime and finish coats of paint and/or enamel.

1.18 HOUSEKEEPING PADS

A. Coordinate housekeeping pads for:

1. All equipment indoors or outdoors

2. All floor supports or braces

B. Pads shall be a minimum of 4" above the finished floor. Coordinate curb height with equipment drains.

C. Each pad shall be a minimum of 6" larger then the equipment, support or isolation base in all directions.

D. Pads shall be formed, poured with concrete, and tooled by the General Contractor.

1.19 DUCT AND PIPE SLEEVES, PLATES AND ESCUTCHEONS, FIRESTOPPING AND SMOKEPROOFING

A. Where piping and/or ductwork pass through masonry or concrete walls or drywall partitions or floors, each Contractor shall provide and set individual sleeves for each pipe or duct and all other work under his charge, as necessary for passage of all pipes and/or ducts. Sleeves shall be of sufficient size to provide 1/2" air space around the pipe or duct passing through (including insulation where pipes or ducts are externally insulated). All openings shall be sealed, smokeproofed and made tight. Each Contractor shall be responsible for the exact location of sleeves provided under his Contract and shall coordinate all requirements for piping and ductwork sleeves.

B. Each Contractor, for work under his charge, shall determine the required inside diameter of each individual wall opening or sleeve before ordering, fabrication or installation.

C. Sleeves and inserts shall not be used in any portions of the building, where their use would impair the strength or construction features of the building. Elimination of sleeves must be approved by the Architect.

D. Provide chrome plated brass escutcheons with set screw for exposed piping, in all areas except in mechanical rooms. In this area use plain brass or cast iron escutcheons suitable for painting. All escutcheons shall be sized to fit the bare pipe or insulation in a snug and neat manner. They shall be of sufficient size to cover sleeved openings for the pipes and of sufficient depth to cover sleeves projecting above floors. Escutcheons shall be as manufactured by Beaton & Caldwell, Dearborn Brass, or Grinnell.

E. Pipe or duct sleeves shall be made of Schedule 40 pipe, 20 gauge galvanized steel or 16 gauge steel as follows:

1. Sleeves on pipes passing through masonry or concrete construction shall be Schedule 40 pipe.

2. Sleeves on ducts passing through concrete construction shall be 20 gauge steel unless required otherwise by item 4. below.

3. Sleeves on pipes or ducts passing through fire rated partitions shall be 16 gauge steel.

4. Sleeves on pipes or ducts passing through non-rated drywall construction shall be 20 gauge galvanized steel.

F. Pipe or duct sleeves shall be set as follows:

1. Set sleeves 1" above finish floor, (except set sleeves, 6" above finish floor at penthouses or mechanical rooms and 6” above finished roof) and flush on each side of walls. Coordinate roof penetrations with roof Subcontractor.

2. Sleeves shall be set securely in place before concrete is poured when placed in concrete construction.

3. Provide sheet metal sleeves for all duct penetrations and cover with sheet metal plates all penetrations after ductwork has been installed through walls/floors.

G. Each Contractor shall fire stop, smoke stop, and/or acoustically seal the space between the sleeves provided under his Contract and piping or ductwork as applicable, as follows:

1. See Specification Section 230584 Through Penetration Firestopping System

H. Except as otherwise specified, underground piping passing through exterior walls or foundation slabs on grade, shall have penetration closures of the modular mechanical type, consisting of interlocking synthetic rubber links shaped to continuously fill the annular space between the pipe and wall opening. Links shall be loosely assembled with bolts to form a continuous belt around the pipe and with a pressure plate under each bolt head and nut. After the seal assembly is positioned in the sleeve, tightening of the bolts shall cause the rubber sealing elements to expand and provide an absolutely watertight seal between the pipe and wall, reducing chances of cathodic reaction between these members. Each Contractor for work under his charge shall determine the required inside diameter of each individual wall opening or sleeve before ordering, fabrication or installation. The inside diameter of the wall opening shall be sized to fit the pipe and ensure a watertight joint. Where applicable, when installing seals, take into account the pipe O.D. if non-standard due to coating or jacketing.

1.20 MISCELLANEOUS IRON AND STEEL

A. Each trade shall provide all primary and secondary steel supports and hangers as shown on the drawings and/or as required to support equipment, ductwork, piping, exhaust fans, or any other materials provided under the work of this Section.

B. The work of this Section of designing, furnishing and installing all miscellaneous metal work associated with the system, and related items as indicated on the drawings and/or as specified herein, and includes, but is not limited to the items listed herein below.

C. The scope of work shall include:

1. Exhaust fan support platforms including ship ladders, steel grating for decking, cross-bracing and floor stands.

2. Intermediate beams to hang ductwork and piping from the roof. All piping and ductwork must be hung from beam or supported from the floor. Provide supplemental steel for support of equipment.

3. Support of ductwork and piping in shafts in addition to support provided by structure.

4. Support of ductwork via floor stands as required.

5. Heat exchanger support racks.

6. Piping support in underground concrete trench and manholes.

7. Pipe anchors in the building.

8. Hangers, brackets, angel irons or rods required for the support and protection of HVAC, plumbing and fire protection equipment.

9. Field prime painting of galvanized steel and field finish painting.

D. Shop Drawings for General Miscellaneous Items

1. Submit Shop Drawings of all miscellaneous metal items to Architect for approval, showing sizes and thickness of all members, types of materials, methods of connection and assembly, complete dimensions, clearances, anchorage, relationship to surrounding work by other Trades, shop paint, and other pertinent details of fabrication and installation.

E. The Subcontractor shall engage the services of a Professional Engineer registered within the state wherein the project is located to prepare complete Design Drawings and structural design computations based on, and closely following, the design and details on the Drawings. The Design Drawings and structural design computations, with the Engineer's seal affixed thereto, shall be submitted to the Architect for review. The structural design computations shall provide a complete structural analysis, including anchors and fastening devices, and shall certify as to conformation to governing laws and codes. These submittals, upon review, must be sufficient, when taken in conjunction with this Specification to provide the complete basis of the fabrication and erection.

F. Samples

1. Submit duplicate samples of all materials to be furnished under this Section if, and in size and form, requested by Architect.

G. Do not order materials or begin fabrication until Architect's approval of submittals has been obtained.

H. In addition to the governing laws and codes, the following Specifications and Codes form a part of this Specification:

1. American Iron and Steel Institute applicable standards.

2. American Institute of Steel Construction "Code of Standard Practice for Steel Buildings and Bridges" and "Specifications for the Design, Fabrication and Erection of Structural Steel for Buildings".

3. American Welding Society Code: Standard Code for Arc and Gas Welding in Building Construction.

I. All materials shall be new stock, free from defects impairing strength, durability or appearance and of best commercial quality for each intended purpose.

1. Unless other wise specifically called for, work of this Section shall be fabricated of structural steel conforming to ASTM Specification A36.

2. Steel pipe shall be seamless steel pipe conforming to ASTM Specification A53, Schedule 40.

3. Steel tubing shall be seamless steel tubing conforming to ASTM Specifications A500 to A501.

4. Construction specialties such as slotted inserts, wedge inserts, etc., shall be as manufactured by Hohmann and Barnard, Gateway Erectors, Inc., Richmond Screw Anchor Co. or equal approved by Architect.

5. Non-ferrous metals shall be as specified under descriptions of specific items, herein below.

J. Provide all anchors, bolts, sockets, sleeves, and other parts required for securing each item of work of this Section to the construction, including furnishing to concrete workers all required insets and sleeves for use at concrete.

1. All exposed fastenings shall be of the same material and finish as the metal to which applied, unless otherwise noted.

2. Welding rods shall conform to AWS Standards and the recommendation of the welding rod manufacturer.

3. Shop primer for other ferrous surfaces shall be a high-quality, lead-free, rust-inhibitive primer, Tnemec No. 10-99 Metal Primer or equivalent by Devoe and Raynolds Co., Carboline or equal.

K. Metal surfaces shall be clean and free from mill scale, flake, rust and rust pitting. Metal work shall be well formed and finished to required shape and size, true to details, with straight, sharp lines and angles and smooth surfaces. Curved work shall be true radii. Exposed sheared edges shall be eased.

L. Weld all permanent connections. Welds shall be continuous on all exposed surfaces and where required for strength on concealed surfaces. Exposed welds shall be ground

flush and smooth, with voids filled with metallic filling compound (metallic filling compound not permitted on surfaces to receive hot-dip galvanizing). Tack-welding will not be permitted unless specifically called for. Do not use screws or bolts where they can be avoided. Where used, heads shall be countersunk, screwed up tight, and threads nicked to prevent loosening.

M. Fastenings shall be concealed where practicable. Thickness of metal and details of assembly and supports shall give ample strength and stiffness. Joints exposed to weather shall be formed to exclude water.

N. Do all cutting, punching, drilling and tapping required for attachment of anchor bolts and other hardware and for attachment of work by other Trades. All such cutting, punching, drilling, etc., shall be done prior to hot-dip galvanizing of the various components.

O. Live loads shall be not less than the minimum required by law. Where specific live load are not set forth in the laws and codes applicable to this work, and are not given on the Drawings or in this Specification, designs shall be such as to support the live loads which may normally be imposed without failure, without deflection of more than 1/360 of length of any member, and without permanent deformation, all with a factor of safety of not less than 2 1/2 to 1.

P. Shop Painting

1. All ungalvanized ferrous metals under this Section shall be given a shop coat of rust inhibitive primer of type specified above.

   a. Immediately before shop painting, remove all rust, loose mill scale, dirt, weld flux, weld spatter, and other foreign material with wire brushes and/or steel scrapers. Power tool clean in accordance with SSPC SP-3 (Power Tool Cleaning). Remove all grease with oil by use of solvent recommended by paint manufacturer. Sandpaper exposed surfaces as required to produce smooth, even finishes.

   b. Apply paint by spray process in strict accordance with manufacturer's printed instructions to uniform thickness(es) recommended by manufacturer. Apply thoroughly and evenly and work well into corners and joints taking care to avoid sags and runs.

   c. Do not paint surfaces to be embedded in concrete, or to be welded in the field. After field welds are complete, grind smooth and flush, thoroughly clean and then apply specified primer over all unprimed in the field by brush roller.

   d. After erection, sand smooth and retouch all portions of the shop coats chipped or damaged during erection, and coat all field welds and connections with primer equivalent to that used for the shop coat.

Q. Installation

1. All materials shall be carefully handled and stored under cover in manner to prevent deformation and damage to the materials and to shop finishes, and to prevent rusting and the accumulation of foreign matter on the metal work. All such work shall be repaired and cleaned prior to erection.

2. Work shall be erected square, plumb and true, accurately fitted, and with the tight joints and intersections. All anchors, inserts and other members to be set in concrete or masonry shall be furnished loose by this Trade to be built-into concrete and masonry and by those Trades as the work progresses. Later cutting or drilling shall be avoided wherever possible.

3. All metal work shall be rigidly braced and secured to surrounding construction, and shall be tight and free of rattle, vibration, or noticeable deflection after installed.

4. Where members, other than expansion bolts or inserts, are fastened into concrete, set such members in holes formed as specified below, and secure permanently in place by installation of proprietary-type expanding grout manufactured specifically for such purpose, used strictly in accordance with manufacturer's directions. Holes to receive members shall be formed with galvanized sheetmetal sleeves, expanded polystyrene foam, or other approved method to provide at least 1/2 inch clearance around entire perimeter. At exposed applications, hold expanding grout back 1/2 inch from finish surface and fill voids with Portland cement grout to match color and texture of surrounding concrete surface.

5. Electrolytic Isolation

   a. Where dissimilar metals are to come into contact with one another, isolate by application of a heavy coating of bituminous paint on contact surfaces in addition to shop coat specified above. Do not permit the bituminous paint in any way to remain on surfaces to be exposed or to receive sealant.

R. Description of Major Items

1. The items described below constitute the major part of the work of this Section, but are not intended or implied to cover each and every item that may be required to properly complete the work. Carefully review the Drawings to determine the full extent of the miscellaneous metal work required.

S. Steel Ladders/Platforms

1. Fabricate and install interior steel ladder at fans, air handling units, filter racks and all equipment requiring service. Ladders shall have a safety cage as required by OSHA regulations.

2. Except as may be otherwise indicated on the Drawings, ladder shall be minimum 16 inches wide, fabricated of minimum 3/8 inch by 2 1/2 inches hot rolled steel rails and minimum 3/4 inches outside diameter steel pipe rungs. Rungs shall be

spaced 12 inches on center and shall be continuously welded to the rails. Provide a pair of steel clip angles or wall brackets at bottom and steel anchor plates or wall brackets at top, welded to the rails, as indicated.

3. Exterior steel ladders shall be hot dip galvanized after fabrication as specified hereinbefore. Rungs are to have non-slip surfaces.

4. All shall be OSHA and ANSI compliant.

T. Gratings and Frames

1. Fabricated and install steel gratings and frames at fan platforms.

2. Steel grating frames shall consist of a steel angle perimeter frame constructed of steel angles, at least 4 inches by 4 inches by 3/8 inches carried around perimeter with coped or mitered, full-welded corners. Perimeter frames shall be anchored with 7/16 inch minimum diameter expansion bolts or other suitable devices of adequate capacity, at corners, two (2) per beam end and spaced not more than 2 feet on center around full perimeter.

3. Steel Gratings shall be pressure-locked type, with bearing bars spaced 1 3/16 inch on center and cross-bars spaced 4 inches on center. Sizes of bars shall be as required by manufacturer's loading tables to limit deflection of any member across any span to 1/240th of the span at live load of 100 pounds per square foot. Gratings shall be as manufactured by Borden Metal Products, Co., Irving Subway Grating Co., Reliance Steel Products Co., approved by Architect.

4. All (gratings and) frames shall be hot-dip galvanized after fabrication as specified hereinbefore (aluminum).

U. Miscellaneous Items

1. Carefully review all Drawings for miscellaneous metal items required but not specifically listed above, such as miscellaneous steel clip angles, miscellaneous steel bracketing, and other miscellaneous metal items as indicated on the Drawings, reasonably implied therefrom, or reasonably necessary for the thorough completion of the work.

2. Provide rigid and secure anchorage of all components whether or not specifically described in complete detail on the Drawings.

V. Piping supports shall be coordinated with the building structure and shall span between roof beams as required.

1.21 WATERPROOFING, FLASHING AND COUNTERFLASHING

A. (Edit as applicable) Unless specifically indicated otherwise on the drawings, each Contractor shall provide all counterflashing and waterproofing of all piping, ductwork

and equipment provided by him, which pierce roofs, walls and other weatherbarrier surfaces. All work under this paragraph shall be coordinated with the CM.

B. All work shall be performed in a workmanlike manner to ensure weatherproof installation. Any leaks developed due to each Contractor's work shall be repaired at his expense, to the Architect's satisfaction.

C. Pipes passing through slabs shall have the sleeve extended above floors as hereinbefore specified to retain any water and the space between the pipe and sleeve caulked waterproof fire stopping. The top and the bottom shall be sealed with monolastic caulking compound.

D. All flashing required for ductwork and piping penetrations shall be provided by the CM.

1.22 ELECTRICAL WORK, MOTORS, MOTOR CONTROLLERS

A. See Section 230513 MOTORS AND CONTROLLERS.

B. See Divisions 26, 27 and 28 for Electrical.

1.23 IDENTIFICATION OF MATERIALS

A. See Section 230553.

1.24 VALVE TAGS, NAMEPLATES AND CHARTS

A. See Section 230553.

1.25 PARTS LIST AND INSTRUCTIONS FOR OPERATION AND MAINTENANCE

A. Each Contractor shall thoroughly instruct the representative(s) of the Owner, to the complete satisfaction of the Architect, in the proper operation of all systems and equipment provided by him. Each Contractor shall make arrangements, via the CM as to whom the instructions are to be given in the operation of the basic and auxiliary systems and the periods of time in which they are to be given. The Architect shall be completely satisfied that the representative of the Owner has been thoroughly and completely instructed in the proper operation of all systems and equipment before final payment is made. If the Architect determines that complete and thorough instructions have not been given by each Contractor to the Owner's representative, then each Contractor shall be directed by the Architect to provide whatever instructions are necessary until the intent of this paragraph of the specification has been complied with. All time required for Owner's instruction to satisfy the above requirements shall be included in this Contract. No extra compensation for such instructions will be allowed.

B. Each Contractor, including but not limited to, the HVAC Contractor, shall submit to the Architect for approval, a total of (6) typed sets, bound neatly in loose-leaf binders, of all maintenance and operating instructions for the installation, operation, care and maintenance of all equipment and systems. All data and literature furnished shall be

specific for the make and model of the equipment furnished. General non-specific catalog data will not be acceptable. Information shall indicate possible problems with equipment and suggested corrective action. The manuals shall be indexed for each type of equipment. Each section such as fans, valves, plumbing fixtures, hot water heaters, boilers, air handling units, etc., shall be clearly divided from the other sections. A sub-index for each section shall also be provided. The methodology of setting-up the manuals shall be submitted to the Architect and Owner through the General Contractor for approval prior to final submission of manuals.

C. The instructions shall contain information deemed necessary by the Architect and shall include, but not be limited to, the following:

1. Instructional classes on equipment and systems operation for Owner's representative and maintenance personnel, by engineering staff of each Contractor. Minimum of 48 hours of instruction for minimum of (6) people. Instruction shall include:

    a. Explanation of manual and its use.

    b. Summary description of the HVAC systems.

    c. Purpose of systems.

2. System

    a. Detailed description of all systems.

    b. Illustrations, schematics, block diagrams, catalog cuts and other exhibits.

3. Operations

    a. Complete detailed, step-by-step, sequential description of all phases of operation for all portions of the systems, including start-up, shutdown, adjusting and balancing. Include all posted instruction charts.

4. Maintenance

    a. Parts list and part numbers.

    b. Maintenance, lubrication and replacement charts and manufacturer's recommendations for preventive maintenance, as applicable to his work.

    c. Troubleshooting charts for systems and components.

    d. Instructions for testing each type of part.

    e. Recommended list of on-hand spare parts.

    f. Complete calibration instructions for all parts and entire systems.

g. Instruction for charging, filling, draining and purging, as applicable.

h. General or miscellaneous maintenance notes.

5. Manufacturer's Literature

a. Furnish complete listing for all parts required for models actually furnished.

b. Names, addresses and telephone numbers of manufacturers and suppliers.

c. Describe and operation of all models actually furnished.

d. Furnish all and only pertinent brochures, illustrations, drawings, cuts, bulletins, technical data, certified performance charts and other literature with the model actually furnished to be clearly and conspicuously identified.

e. Internal wiring diagrams and engineering data sheets for all items and/or equipment furnished under each Contract.

f. Guarantee and warranty data.

6. Each Contractor shall furnish instructions for lubricating each piece of equipment installed by him. Instructions shall state type of lubricant, where and how frequently lubrication is required. Frame instructions under glass and hang in a location as directed by Architect.

1.26 MANUFACTURER'S REPRESENTATIVE AND COMMISSIONING OF SYSTEMS

A. Each Contractor shall provide, at appropriate time or as directed by the Architect, the on-site services of a competent factory trained Engineer or authorized representative of particular manufacturer of equipment provided under his Contract, such as for the air handling units, automatic temperature controls, building automation system (BAS), fire pump, domestic hot water heaters, boilers, etc., provided under this Contract, to instruct the Owner, inspect, adjust and place in proper operating condition any item provided by him, as applicable.

B. The HVAC Contractor, as applicable, shall commission and set in operating condition all major equipment and systems, such as the condenser water, hot water and all air handling systems, etc., in the presence of the applicable equipment manufacturer's representatives, and the Owner and Architect's representatives. In no case will major systems and equipment be commissioned by any of the Contractor's forces alone, without the assistance or presence of the equipment manufacturers.

C. A written report shall be issued by the particular equipment manufacturer and the Mechanical Contractor summarizing the results of the commissioning and performance of each system for the Architect's record. No additional compensation will be allowed for any Contractor for such services.

D. The Contractor shall prepare and submit to the Architect for acceptance, a schedule of anticipated system commissioning. No system shall be commissioned without prior acceptance of the schedule by the Architect and Owner. No systems shall be commissioned prior to submittal and acceptance of Operation and Maintenance Manuals.

1.27 CONNECTIONS TO EQUIPMENT

A. Each Contractor shall provide all duct and/or pipe connections, condensate traps, drains, overflows, relief valves and vents, power connections, etc., to make equipment operable, as provided under other Sections of the specifications, as shown on the Architectural and/or each Trade's drawings and herein specified, including final connections to equipment to result in a complete system, fully operational. Coordinate location of all equipment with Architect. Obtain installation diagrams and methods of installation of all equipment from manufacturers. Follow instructions strictly. If additional information is required, obtain same from Architect. If equipment is indicated on the Architectural drawings, it shall also be construed and understood by the Mechanical Contractor to be constructed as shown on the HVAC drawings and shall be fully serviced and connected at no extra cost to the Owner.

1.28 SMOKE DETECTION AND FIRE SAFETY SYSTEMS

A. All duct or unit mounted smoke detectors shall be furnished and wired to the building fire alarm system by the Electrical Contractor. All smoke detectors required in units and ducts and for smoke barrier dampers shall be installed in the field by the HVAC Contractor. Refer to the Contractor Coordination Matrix contained under item 1.30 of this section.

B. All smoke dampers, except in built-up air handling units, shall be furnished by the ATC Contractor with electric actuators field wired by the ATC Contractor. Dampers shall be field installed by the HVAC Contractor, except dampers in the air handling units.

C. The Electrical Contractor, when providing smoke detectors, shall include additional contacts, as required and coordinated with the ATC Contractor, to allow for other control functions, as specified hereinafter. Close coordination must be exercised to allow for the provision of contacts.

D. All smoke detectors shall be installed as recommended by the smoke detection system manufacturer in sheet metal ducts or plenums to ensure that the sensing elements are effective and shall coordinate installation of smoke detectors with the Electrical Contractor and detector manufacturer.

E. The HVAC Contractor shall provide access doors to make all such detection heads accessible, and shall provide bracing for smoke detection sampling tubes, as recommended by the detector manufacturer, to properly and securely support such tubes.

F. If duct smoke detectors are required to be installed in ducts that are exposed to outside ambient conditions, they shall be installed in ventilated accessible weatherproof enclosures. See details on HVAC Drawings.

1.29 ELECTRICAL ROOM REQUIREMENTS

A. The HVAC Contractor [or Subcontractors] shall not install any piping, ductwork or equipment in or through electrical rooms, transformer rooms, electrical closets, telephone rooms or elevator machine rooms, unless piping, ductwork or equipment is intended to serve these rooms. If any Contractor violates this requirement, he shall remove and/or relocate all items as required at his expense and to the satisfaction of the Architect.

1.30 HOISTING EQUIPMENT AND MACHINERY

A. All hoisting equipment and machinery required for the proper and expeditious prosecution and progress of the work under this Contract shall be furnished, installed, operated and maintained in safe condition by each Contractor for his material and/or equipment delivered to the designated hoisting area. All costs for hoisting operating services shall be borne by the Mechanical Contractor for all equipment and work under his charge.

1.31 STAGING

A. All staging, exterior and interior, required to be over 8'-0" in height, shall be furnished and erected by each Contractor for work under his charge and maintained in safe condition by him for proper execution of his work.

1.32 CONTROL WIRING

A. The ATC Contractor shall provide all control and interlock wiring for all systems provided under the HVAC, plumbing and ATC Contracts.

B. All control wiring shall be installed in conduit and in accordance with the respective equipment manufacturer's requirements, and all connections shall be provided by the Mechanical and/or the ATC Contractor. All conduit and wiring provided by these Contractors shall be installed in accordance with the requirements of Section 26 of the specifications.

1.33 COMPONENT COORDINATION

A. The HVAC, ATC and Electrical Contractors Scope of Work shall be implements in accordance with the following matrix:

Device	Furnished By	Installed By	Power Wiring	Control Wiring	Fire Alarm Wiring
Smoke Detectors	26	23	26	25	26
Smoke Dampers in or at AHUs	23	23	N/A	N/A	N/A

Device	Furnished By	Installed By	Power Wiring	Control Wiring	Fire Alarm Wiring
Smoke Damper Actuators in or at AHUs	Damper Mfr	23	26	26	N/A
Smoke Dampers	23	23	N/A	N/A	N/A
Smoke Dampers Actuators	Damper Mfr	23	26	25	N/A
Fire Dampers	23	23	25	25	N/A
Supply and Exhaust Boxes	23	23	25	25	N/A
Box Flow Pick-Up	Box Mfr	Box Mfr	N/A	Box Mfr	N/A
Box Damper Actuator	25	Box Mfr	25	25	N/A
Box DDC Controller	25	Box Mfr	25	25	N/A
Box Coil Valve	25	23	N/A	25	N/A
Supply/Exh. & Hood Valves	25	23	N/A	25	N/A
Valve Actuator	25	25	N/A	25	N/A
Supply Valve Reheat Coil	23	23	N/A	N/A	N/A
Reheat Coil Valve	25	23	N/A	25	
Laboratory Control Panel	25	25	26	25	N/A
Controls at Fume Hood	25	25	25	25	N/A
Sheet Metal Damper	23	23	N/A	N/A	N/A
Sheet Metal Damper Actuators	25	25	25	25	
Energy Meters	25	23	26	25	N/A
Flow Measuring Stations	25	23	N/A	25	N/A
DDC Panels	25	25	26	25	N/A
Air Compressor	25	25	26	25	N/A
Air Dryer	25	25	26	25	N/A
Fuel Oil System	23	23	26	25	N/A
Control Valves	25	23	25	25	N/A
Humidifiers	23	23	N/A	25	N/A
Humidifier Valve	23	23	N/A	25	N/A
Humidifier Airflow Switch	25	25	N/A	25	N/A
VSDs at EAHU	23	23	26	25	N/A

PART 2 – PRODUCTS

2.1 NOT USED

PART 3 – EXECUTION

3.1 NOT USED

END OF SECTION

SECTION 23 0510 – 3D BUILDING INFORMATION MODELING

1.1 OVERVIEW

A. Building Information Modeling (BIM) is the development and use of a 3-dimensional computer model to represent a virtual model of the facility and the process for constructing the facility. Once the model is developed, it can be used to simulate the construction process and to manage the operations of the facility. The Building Information Model can be created by combining many different 3D models from the designers and contractors into a composite model. From this composite model, views and data appropriate to various users' needs can be extracted and analyzed to generate information, to make decisions and to improve the process of delivering the building.

1.2 OUTCOME

A. The purpose of BIM is to create a model that may be used for coordination of all trades throughout the construction process, with the final product being an as-built model of the Project which contains all of the major elements of construction that could be used by the Owner for future operation and maintenance of the building.

1.3 CODES, STANDARDS AND REFERENCES

A. LEED Building General Requirements: The Owner requires the Contractor to implement practices and procedures to meet the project's environmental performance goals, which include achieving LEED Certification. Specific project goals that may impact this area of work include: Use of recycled-content materials; use of locally-manufactured materials; use of low-emitting materials; construction waste recycling; and the implementation of a construction indoor air quality management plan. The Contractor shall ensure that the requirements related to these goals, as defined in the sections below, are implemented to the fullest extent. Substitutions, or other changes to the work proposed by the Contractor or their Subcontractors, shall not be allowed if such changes compromise the stated LEED Building Performance Criteria.

1. Comply with LEED (Leadership in Energy and Environmental Design) Green Building Rating System BD+C, Version 3.

B. Section 017419 "Construction Waste Management and Disposal" for requirements related to construction waste management and disposal at the project site.

C. Section 018113 "VOC Limits for Adhesives, Sealants, Paints and Coatings" for restrictions of VOC in adhesives, sealants, paints and coatings.

D. Section 018119 "Construction Indoor Air Quality (IAQ) Management" for requirements during construction for indoor-air-quality management.

1.4 REQUIRED DISCLAIMER

A. All users shall be required to sign a disclaimer as follows:

TERMS OF USE OF 3D COMPUTER MODEL FOR THE NYU COLLEGE OF NURSING, DENTISTRY AND BIOENGINEERING INSTITUTE PROJECT

*This 3D Computer Model for the Project is provided by EYP Architecture & Engineering (**Architect)** to user (individually, a "User", or collectively, "Users") at the User's request subject to the terms and conditions stated below (the "Terms of Use"):*

The 3D Model is made available to User solely for his convenience and for informational purposes only. The User is not to rely upon the 3D Computer Model and the data and/or information contained therein in preparing any of the coordination documents for the Project. The User acknowledges that the 3D Computer Model is not a part of the Construction or Contract Documents for the Project and that the Architect makes no representations or warranties, express or implied, regarding the 3D Computer Model's, accuracy or completeness or the data and/or information contained therein.

By opening the files provided, the User agrees that these terms apply to the 3D Model in its entirety, together with all of its component parts and data The User acknowledges that the requirements of these Terms of Use apply to all of User's principals, employees and agents.

The User agrees that the use of the 3D Computer Model is solely at the User's risk and that the User assumes full responsibility and liability in connection with the User's use of the 3D Computer Model and the information and/or data contained therein. The User agrees that the Architect has no responsibility for any deficiencies, inaccuracies, errors and/or omissions contained in the 3D Computer Model or the data and/or information contained therein. The Architect has no responsibility for any deficiencies or defects in the User's documents, work and/or services resulting from the User's use of the 3D Computer Model in lieu of the Construction and/or Contract Documents for the Project.

The User acknowledges and agrees a) that the use of the 3D Computer Model is not a substitute for professional judgment; b) that the use of the 3D Computer Model does not relieve the User from applying the appropriate standard of care and skill relevant to the use of the 3D Computer Model and its contents; c) that the 3D Computer Model is only to be used as a tool to assist the User in connection with the Project; d) that the User is solely responsible for verifying the accuracy of all results created with the use of the 3D Computer Model; and (e) the Architect is not responsible or liable for the means and methods of construction and the User's use of the 3D Computer Model shall in no way give rise to such responsible or liable by the Architect or its consultants.

THE ARCHITECT AND ITS CONSULTANTS SPECIFICALLY DISCLAIM ALL WARRANTIES WHETHER EXPRESSED, IMPLIED OR STATUTORY, INCLUDING, WITHOUT LIMITATION, ALL WARRANTIES OF MERCHANTABILITY, TITLE, FITNESS FOR A PARTICULAR PURPOSE, CONSTRUCTABILITY, NON-INFRINGEMENT, COMPATIBILITY,

SECURITY OR ACCURACY AND USERS' USE OF THE 3D COMPUTER MODEL IS AT ITS OWN RISK. USER ASSUMES FULL RESPONSIBILITY AND RISK OF LOSS RESULTING FROM USE OR INABILITY TO USE THE 3D COMPUTER MODEL OR ITS CONTENT.

The User further agrees that the 3D Computer Model contains information that is confidential and proprietary to the Architect, and that the Architect retains the copyright and all other reserved rights in the work product reflected in the 3D Computer Model that was prepared by the Architect or its consultants for the Project. The Architect grants the User a non-exclusive, non-transferable royalty-free license to use the 3D Computer Model for informational purposes only in connection with the Project in strict accordance with these Terms of Use. The User agrees that the 3D Computer Model will be used solely and exclusively for the Project and that it will not use the 3D Computer Model and the data and/or information contained therein, in whole or in part, for any purpose or project other than the Project. The User further agrees that the 3D Computer Model will continue to be kept confidential by the User, and that it shall not be disclosed in any manner, transferred or exchanged to any third parties by the User without the express written consent of the Architect.

Upon completion of the User's involvement with the Project or at any time upon written request of the Architect, the User shall promptly deliver to the Architect the 3D Computer Model and any other material containing or reflecting any information or data in the 3D Computer Model (whether prepared by the Architect, the User or otherwise) and will not retain copies, extracts or other reproductions, tangible or intangible, in whole or in part of the 3D Computer Model. The User's non-disclosure and non-use obligations set forth herein shall survive the return, destruction or deletion of the 3D Computer Model. If the User becomes legally compelled, by subpoena or court order, to disclose the 3D Model, or any information contained therein, the User shall provide the Architect with prompt notice so that a protective order or other appropriate remedy may be sought by and at the expense of the Architect and/or compliance with the provisions of this Terms of Use may be waived.

User hereby agrees that the Architect shall be entitled to equitable relief, including injunction, in the event of any breach of the Terms of Use, including without limitation its obligations to maintain the confidentiality of the 3D Model, that the granting of such relief will not be opposed and that such relief shall not be the exclusive remedy for such breach. The Architect's failure to insist upon strict adherence to any term of these Terms of Use shall not be considered a waiver thereof or deprive the Architect of the right subsequently to insist upon strict adherence to that term or any other term of this Terms of Use.

The User hereby agrees, to the fullest extent permitted by law, that in no event shall the Architect be liable to User for any damages or losses of any kind including, but not limited to, damages for death or bodily injury to persons, injury to property, and direct, indirect, consequential, special, or incidental damages, resulting from any error, omission, inaccuracy, deficiency or defect in or problem with, the 3D Computer Model or the data and/or information contained therein.

Without limiting the foregoing, the User acknowledges that the 3D Computer Model and the data and/or information contained therein may be inaccurate and/or incomplete and that the Architect will have no obligation to update or modify the 3D Computer Model or any of the data and/or information contained in it because the 3D Computer Model was prepared solely for informational purposes and is not part of the Construction or Contract Documents for the Project.

The User agrees that in the event the User, its officers, directors, shareholders, partners, agents, employees, consultants or independent contractors use the 3D Computer Model or the information and/or data contained therein, it shall, to the fullest extent permitted by law, defend, indemnify and hold the Architect and its officers, directors, shareholders, partners, principals, consultants, agents and employees harmless from and against any and all actions, damages, demands, claims, suits, losses, liability, judgments, recoveries, costs and expenses, including, but not limited to, reasonable attorney's fees which any of them may incur in connection with, arising from, resulting from or related to any use of the 3D Computer Model or the data and/or the information contained therein by the User or any third party who receives the 3D Computer Model from the User. Such claims include, without limitation, any claim which may arise due to deletions, omissions or variations of data due to mechanical or technical failure in connection with the transmission of the 3D Computer Model.

The User acknowledges and agrees that it is not in privity of contract with the Architect as of result of these Terms of Use with respect to any claims or causes of action related to or arising out of the Project. The User further agrees to obligate any contractor, consultant or other party who uses the 3D Computer Model to be bound by the terms and conditions contained herein. Any User's use of the 3D Computer Model and the information and/or data contained therein constitutes such User's acceptance of all the terms here specified.

ACCEPTED & AGREED:

Name: _____

Title: _____

Date: _____

1.5 SCOPE OF WORK

A. General Scope Requirements

1. In general, the BIM scope of work for the Project is to create a technically accurate and detailed 3D computer model of the architectural, structural, mechanical, plumbing and electrical systems.

2. The computer model (in plan view) shall extend to five feet beyond the exterior walls of the building. Vertically, the model shall extend from the lowest extent

of the foundations up through and including the roof of the top-most floor. To the extent that the scope includes building systems, those systems will be included to the full horizontal and vertical extents of the model including underground utilities and roof mounted items.

3. The level of detail defined in the Specific Scope Requirements is the minimum level of detail required in the model. Greater detail than the minimum should be incorporated into the model where important details are necessary for communicating information about a system.

4. Each Trade Contractor shall provide shop drawings in both 2D and 3D model format.

5. The 3D model shall be located and oriented to the pre-determined world coordinates for the project to allow easy integration into the BIM for the project.

6. The 3D model shall include the project control grid. This grid should be visible when viewing the model in a true view along the X, Y or Z axis.

7. The 3D model shall be layered and constructed in a manner such that all elements of the model can be converted into a 2D dimensioned drawing for use in the field.

8. The 2d shop drawing scale should be 1'-0" = 3/8" unless specified otherwise or as required for full comprehensible and reviewable details.

9. Each drawing should include a key map referencing the location in the building.

10. In addition to the native file format, the Trade Contractor shall provide translation of the 3D model into a .DWG, CIS/2 or other agreed upon file format that can be viewed using NavisWorks Manager.

11. The following changes shall be promptly incorporated into the drawings and model, on a regular basis:

    a. RFIs, Bulletins and Owner changes
    b. Changes in the sequence of work
    c. Field modifications
    d. Shop drawing review comments
    e. Changes requested by the Construction Manager

12. All revised 3d model or 2D drawing submittals shall have a written narrative to define changes from previous submittals. Typical drafting techniques such as 'clouds' or 'bubbles' are acceptable means of tracking changes on the 2D drawings. [Layer control shall be used to define changes in the 3D model. All revisions shall be shown in both 2D and 3D formats].

13. The working 3D model will be shared with the Trade Contractors and design team at least once every two weeks. This will be performed by posting the model

to the project FTP site or PrologWeb. The Trade Contractor will post the native file format and an agreed upon file format as defined in Item J above.

14. Pre-detailing meeting:

    a. Shall determine the lead trade.

    b. The order that coordination work will be added to the model.

15. The 3D modeling and layering conventions will be established at a pre-detailing meeting to be attended by:

    a. Concrete Contractor and detailer
    b. Steel Fabricator and detailer
    c. Mechanical Contractors and detailers
    d. Electrical Contractors and detailers
    e. Plumbing Contractors and detailers
    f. Fire protection Contractors and detailers
    g. Other trades.

16. Each Trade Contractor will submit its 3D modeling software and proposed file format(s) for approval prior to proceeding with detailing. The Trade Contractor will also provide a 3D mock-up of a specific portion of the project, to be agreed upon at a future time, in full detail in order to verify the compatibility of the file formats.

17. Each Trade Contractor shall provide viewer licenses only for its specific 3D software to the following:

    a. Owner
    b. Construction Manager
    c. Architect
    d. Engineer of Record

18. Each Trade Contractor and detailers shall have the capability to host and attend web meeting using Microsoft Live Meeting software.

19. Each Trade Contractor shall complete the drawings and model in a time frame capable of meeting the Project Schedule.

20. Each Trade Contractors are advised that the model shall be shared among all trades and shall be the basis of coordination and fabrication. Costs incurred for post-coordination changes caused by unauthorized deviations from the model shall be borne by the Trade Contractor that initially deviated from the model. This determination is at the sole discretion of the Construction Manager.

21. The base architectural BIM will be created using AutoDesk's Revit Building.

22. The 3D modeling effort is intended to augment and assist in the MEP coordination process. Before first submission shop drawings, the elements shall

be first pass coordinated in the 3D model. The model is intended to find conflicts before shop drawings are reviewed and approved.

23. In addition to the requirements set forth in the contract documents, final models shall be submitted reflecting true “as-built” conditions.

B. Plumbing Technical Scope Requirements

1. All plumbing piping will be modeled. All plumbing equipment will be modeled to its overall height, width and depth. Pipes will be modeled to the outside diameter of the pipe or the pipe insulation, whichever is greater. Pipe slope will be incorporated in the model.

2. Pipe fittings and connections will not be modeled. All valves, clean outs and accessories will be modeled.

3. Each Trade Contractor to provide a list of minimum typical clearances for all model components and coordinate necessary clearances within the model. The 3D model is to include clearances for equipment – included as a modeled volume such that clash detection and coordination can be accommodated relating to necessary clearances.

4. Each Trade Contractor shall be prepared to attend weekly coordination meetings to resolve conflicts within the model.

5. The 3D models submitted by the Trade Contractor for overall coordination are required to be checked and coordinated with the structure and the Trade Contractor’s own work prior to submittal.

6. The 3D model is to include access areas for equipment – included as a modeled element such that clash detection and coordination can be accommodated relating to access.

7. Coordinated model data is to be distributed weekly and 1 day prior to coordination meetings.

8. Penetrations through building systems shall be identified in the 3D model by means of a modeled sleeve.

9. All items modeled shall have a level of intelligence associated with them, including, at a minimum, material type, size, insulation, etc.

10. All items located within mechanical rooms shall have a level of intelligence associated with them that includes, at a minimum, material type, size, insulation, manufacturer, product numbers, serial numbers, maintenance schedules, operation and maintenance data, etc.

11. All conduits shall be modeled.

C. Electrical Technical Scope Requirements

1. All electrical equipment including switchgear, transformers and panelboards will be modeled to its overall size. All necessary clearances for electrical equipment will be modeled as a separate volume. All conduit 1-1/2" and larger shall be modeled.

2. All light fixtures will be modeled as an overall volume require for that fixture.

3. Each Trade Contractor shall provide a list of minimum typical clearances for all model components and coordinate necessary clearances within the model. The 3D model is to include clearances for equipment – included as a modeled volume such that clash detection and coordination can be accommodated relating to necessary clearances.

4. Each Trade Contractor shall be prepared to attend weekly coordination meetings to resolve conflicts within the model.

5. The 3D models submitted by the Trade Contractor for overall coordination are required to be checked and coordinated with the structure and the Trade Contractor's own work prior to submittal.

6. The 3D model is to include access areas for equipment – included as a modeled element such that clash detection and coordination can be accommodated relating to access.

7. Coordinated model data is to be distributed weekly and 1 day prior to coordination meetings.

8. Penetrations through building systems shall be identified in the 3D model by means of a modeled sleeve.

9. All panelboards modeled shall have a level of intelligence associated with them that accurately identifies at a minimum the panel schedule.

10. All items located within electrical rooms and closets shall have a level of intelligence associated with them that includes, at a minimum, material type, size, manufacturer, product numbers, serial numbers, maintenance schedules, operation and maintenance data, etc.

D. Fire Protection Technical Scope Requirements

1. All fire protection equipment including pipe, valves, heads, risers and drains will be modeled.

2. All light fixtures will be modeled as an overall volume require for that fixture.

3. Each Trade Contractor to provide a list of minimum typical clearances for all model components and coordinate necessary clearances within the model. The 3D model is to include clearances for equipment – included as a modeled volume such that clash detection and coordination can be accommodated relating to necessary clearances.

4. This Trade Contractor shall be prepared to attend weekly coordination meetings to resolve conflicts within the model.

5. The 3D models submitted by the Trade Contractor for overall coordination are required to be checked and coordinated with the structure and the Trade Contractor's own work prior to submittal.

6. Coordinated model data is to be distributed weekly and 1 day prior to coordination meetings.

7. Penetrations through building systems shall be identified in the 3D model by means of a modeled sleeve.

8. All items modeled shall have a level of intelligence associated with them that accurately identifies at a minimum the material type, rating, model number, etc.

9. All conduits shall be modeled

E. Mechanical / Sheetmetal Technical Scope Requirements

1. All ducts and air handling equipment will be modeled. Ducts will be modeled to the outside face dimension. Equipment will be modeled to its overall height, width and depth. All piping associated with the mechanical system will be modeled. Pipes will be modeled to the outside diameter of the pipe or pipe insulation (whichever is greater).

2. Pipe hangers and hanger assemblies and dunnage will be modeled for clash detection and coordination. Fittings and connections will not be modeled. The intent of this model is to show the ductwork and piping, etc. in a true representation of the actual condition at construction completion.

3. Pipe fittings and connections will not be modeled. All valves, clean outs and accessories will be modeled.

4. Each Trade Contractor to provide a list of minimum typical clearances for all model components and coordinate necessary clearances within the model. The 3D model is to include clearances for equipment – included as a modeled volume such that clash detection and coordination can be accommodated relating to necessary clearances.

5. Each Trade Contractor shall be prepared to attend weekly coordination meetings to resolve conflicts within the model.

6. The 3D models submitted by the Trade Contractor for overall coordination are required to be checked and coordinated with the structure and the Trade Contractor's own work prior to submittal.

7. The 3D model is to include access areas for equipment – included as a modeled element such that clash detection and coordination can be accommodated relating to access.

8. Coordinated model data is to be distributed weekly and 1 day prior to coordination meetings.

9. Penetrations through building systems shall be identified in the 3D model by means of a modeled sleeve.

10. All items modeled shall have a level of intelligence associated with them including, at a minimum, the material type, size, insulation, etc.

11. The Basement Level and Level 5 Mechanical Rooms shall have a level of intelligence associated with them that includes at a minimum material type, size, insulation, manufacturer, product numbers, serial numbers, maintenance schedules, operation and maintenance data, etc.

12. Each Trade Contractor shall include in their base bid BIM/Coordination facilities on site. The Construction Manager shall provide a Coordination Trailer for the Construction Team's use throughout the duration of the project. The HVAC Trade Contractor must provide a CAD workstation capable of running the Trade Contractor's CAD software as well as the following BIM software:

    a. NavisWorks Manager (current version)
    b. AutoCAD Revit Architecture Suite (current version)
    c. AutoCAD Revit MEP Suite (current version)

13. Each Trade Contractor shall turn over the above software complete with Licenses at Final Completion for the Owner's use.

14. All conduits shall be modeled.

F. Fire Alarm Technical Scope Requirements

1. All fire Alarm equipment including Fire Alarm conduit sizes/routing and Fire Alarm Panels and associated panels will be modeled.

2. Each Trade Contractor to provide a list of minimum typical clearances for all model components and coordinate necessary clearances within the model. The 3D model is to include clearances for equipment – included as a modeled volume such that clash detection and coordination can be accommodated relating to necessary clearances.

3. This Trade Contractor shall be prepared to attend weekly coordination meeting to resolve conflicts within the model.

4. The 3D models submitted by the Trade Contractor for overall coordination are required to be checked and coordinated with the structure and the Trade Contractor's own work prior to submittal.

5. Coordinated model data is to be distributed weekly and 1 day prior to coordination meetings.

6. Penetrations through building systems shall be identified in the 3D model by means of a modeled sleeve.

7. All items modeled shall have a level of intelligence associated with them that accurately identifies at a minimum the material type, rating, model number, etc.

8. All conduits shall be modeled.

G. ATC Technical Scope Requirements

1. The ATC equipment including conduit and panels will be modeled.

2. Each Trade Contractor to provide a list of minimum typical clearances for all model components and coordinate necessary clearances within the model. The 3D model is to include clearances for equipment – included as a modeled volume such that clash detection and coordination can be accommodated relating to necessary clearances.

3. This Trade Contractor shall be prepared to attend weekly coordination meeting to resolve conflicts within the model.

4. The 3D models submitted by the Trade Contractor for overall coordination are required to be checked and coordinated with the structure and the Trade Contractor's own work prior to submittal.

5. Coordinated model data is to be distributed weekly and 1 day prior to coordination meetings.

6. Penetrations through building systems shall be identified in the 3D model by means of a modeled sleeve.

7. All items modeled shall have a level of intelligence associated with them that accurately identifies at a minimum the material type, rating, model number, etc.

8. All conduits shall be modeled.

END OF SECTION

SECTION 23 0513 – MOTORS AND CONTROLLERS

PART 1 - GENERAL

1.1 RELATED DOCUMENTS

A. Drawings and general provisions of the Contract, including General and Supplementary Conditions, Section 230500, Division 25 and other Division 1 Specification Sections, apply to this Section.

B. LEED Building General Requirements: The Owner requires the Contractor to implement practices and procedures to meet the project's environmental performance goals, which include achieving LEED Certification. Specific project goals that may impact this area of work include: Use of recycled-content materials; use of locally-manufactured materials; use of low-emitting materials; construction waste recycling; and the implementation of a construction indoor air quality management plan. The Contractor shall ensure that the requirements related to these goals, as defined in the sections below, are implemented to the fullest extent. Substitutions, or other changes to the work proposed by the Contractor or their Subcontractors, shall not be allowed if such changes compromise the stated LEED Building Performance Criteria.

1. Comply with LEED (Leadership in Energy and Environmental Design) Green Building Rating System BD+C, Version 3.

1.2 WORK INCLUDED

A. Furnish and install all motors required for all mechanical equipment specified under this Division.

B. Furnish and install all individual motor controllers, starters and disconnect switches not provided under Divisions 26, 27 and 28 – Electrical Work.

C. All motors shall be premium efficiency suitable for the duty and voltage service available and as indicated on the contract drawings.

D. Provide all necessary control transformers so all motors, starters, disconnect switches, etc. are compatible with the control and operating sequences specified.

1.3 RELATED SECTIONS

A. Examine all drawings and criteria sheets and all other Sections of the Specifications for requirements which affect work under this Section whether or not such work is specifically mentioned in this Section.

B. Section 017419 "Construction Waste Management and Disposal" for requirements related to construction waste management and disposal at the project site.

C. Section 018113 “VOC Limits for Adhesives, Sealants, Paints and Coatings” for restrictions of VOC in adhesives, sealants, paints and coatings.

D. Section 018119 “Construction Indoor Air Quality (IAQ) Management” for requirements during construction for indoor-air-quality management.

1.4 REFERENCES

A. Applicable provisions of the following Codes and Trade Standard Publications shall apply to the work of this Section, and are hereby incorporated into, and made a part of the Contract Documents.

B. Material standards shall be as specified or detailed hereinafter and as follows:

1. AFBMA: Anti-Friction Bearing Manufacturers Association.

a. 1-84 – Terminology for Anti Friction Ball and Roller Bearings and Parts.

b. 9-84 – Load Ratings and Fatigue Life for Ball Bearings.

c. 11-78 – Load Ratings and Fatigue Life for Roller Bearings.

d. 20-77 – Metric Ball and Roller Bearings Conforming to Basic Boundary Plans

2. ANSI: American National Standards Institute.

a. 50-84 – Mechanical Vibration of Rotating and Reciprocating Machinery.

3. ASTM: American Society for Testing and Materials.

a. A48-83 – Gray Iron Castings.

b. B117-85 – Method of Salt Spray (Fog) Testing.

4. IEEE: Institute of Electrical and Electronic Engineers.

a. 1-86 – General Principals for Temperature Limits in the Rating of Electrical Equipment.

b. 85-73 – Test Procedures for Airborne Sound Measurements on Rotating Electric Machinery.

c. 112-84 – Standard Test Procedures for Polyphase Induction Motors and Generators.

d. 114-82 – Test Procedures for Single-Phase Induction Motors.

e. 117-74 – Test Procedures for Evaluation of Systems of Insulating Materials for Random-Wound AC Electric Machinery. Single-Phase Induction Motors.

5. NEMA: National Electrical Manufacturer's Association.

a. MG 1-78 – Motors and Generators.

6. NFPA: National Fire Protection Association.

7. National Electrical Code.

8. SAE: Society of Automotive Engineers.

9. SAE Grade 5.

1.5 SYSTEM DESCRIPTION

A. Furnish an install all premium efficiency motors for all systems and equipment.

B. Motor Controllers: Provide individual motor controllers not provided under Division 26. Coordinate with the Division 26 Contractor to determine the location, size and number of individual motor controllers to be provided under this Division.

C. Mounting and installing of motors and drives.

D. Installation of motor controllers supplied under this Division.

E. Work shall be done in accordance with requirements of Division 26 "Electrical Work". Wiring shall be done under Divisions 26, 27 and 28.

F. Disconnect switches; Provide combination motor controller and disconnect switch where required under Division 23 as specified in Division 26. If not specified under individual product sections, then disconnect switches shall be furnished and installed under Division 26.

1.6 SUBMITTALS

A. See Section 230500 and General Conditions for Additional Requirements.

B. Product Data: Provide product description and list of materials including all motor efficiency ratings.

C. Manufacturer's Instructions: Indicate installation procedures that ensure acceptable workmanship and installation standards will be achieved.

1.7 QUALITY ASSURANCE

A. Manufacturer regularly engaged in the design, testing and manufacturing of specified products and issuing complete catalog data on such products.

B. Manufacturers must prove expertise in the design, testing and production of specified or similar to specified products for at least ten (10) years prior to date of bid.

C. Manufacturer must provide written certification that the products provided meet or exceed the specification requirements. An executive officer of the company must sign the written certification.

1.8 PRODUCT DELIVERY, STORAGE AND HANDLING

A. Delivery of materials shall be made to the project by the materials supplier in accordance with the instructions of the Contractor.

B. The Contractor shall provide adequate storage space for the materials, shall be responsible for all items of materials after receipt from the supplier, and shall replace all materials lost or damaged after delivery and receipt.

C. The Contractor shall furnish the materials supplier with receipts for all materials and accessory items received, and shall send copies of these receipts to the Architect.

PART 2 - PRODUCTS

2.1 ACCEPTABLE MANUFACTURER CONTINGENT ON COMPLIANCE WITH SPECIFICATIONS

A. Motors:

1. Toshiba

2. General Electric Company

3. Reliance Electric Company

4. US motor

5. Baldor

B. Motor controllers:

1. General Electric

2. Square D.

3. Allen Bradley

4. Westinghouse/Cutler-Hammer

5. Cerus

2.2 GENERAL

A. All control wiring shall be installed in conduits and in accordance with the respective equipment manufacturer requirements. All connections shall be provided by the HVAC Contractor. All conduit and wiring provided by the Mechanical Contractor shall be installed in accordance with the requirements of Division 26 of these Specifications.

B. Motors shall be built in accordance with latest Standards of NEMA and as specified. Motors shall be specifically and expressly wound for voltage required.

C. Motors shall be tested in accordance with ANSI 50 and conform thereto for insulation resistance and dielectric strength.

D. Motors shall be provided with adequate starting and protective equipment as specified or required and with conduit terminal box of size adequate to accommodate conduits and wires.

E. Capacity shall be sufficient to operate motors under job conditions of operation and load, without overload and shall be at least the horsepower size indicated or specified.

F. All motors shall be suitable for continuous duty at rated horsepower, with temperature rise not to exceed 90°C above a 40º (with a 1.15 SF (before rise). All motors shall be capable of 15% overload without overheating. All motors shall be rated and certified for use with VFD's per NEMA MG1 section 31.

G. All motors shall be properly grounded.

H. Motors”

1. ¾ to 75 MHP shall be provided with one of the following:

   a. Shaft grounding rings (drive end)

   b. Insulated sleeve bearings (Both ends)

   c. Insulated bearings (Both ends).

2. 100 MHP and larger shall be provided with shaft grounding rings and one of the following:

   a. Insulated sleeve bearings both ends.

   b. Insulated bearings both ends.

I. All motors shall be rated and certified for inverter duty, and stamped as such.

1. All motors shall have Class F insulation or higher temperatures.

2. Manufactured to maximize Corona Inception Voltage (CIV) rating.

   a. The minimum acceptable shall be 2500 Volts at 155°C.

3. Windings shall be in-slot wound type.

J. Direct connected motors shall be furnished with adjustable base. Motors connected to driven equipment by belt or shaft shall be furnished with adjustable sliding bases, except for fractional motors which shall be furnished with slotted mounting holes.

K. Motors shall have nameplates giving manufacturer's name, serial number, horsepower, speed and current characteristics.

L. Motors smaller than 1/2 HP shall be capacitor, starter or split-phase type. Motors 1/2 HP and larger shall be squirrel cage, induction type. Motors 1 HP and larger shall have grease lubricated ball bearings and approved grease fittings. Motors provided shall have voltage, phase and hertz characteristics, as scheduled on the drawings.

M. Except for electrical apparatus specifically called for to be provided under this Contract, all motor starters, disconnect switches, controllers and other electrical appurtenances required under the HVAC, Plumbing, Fire Protection, etc. work, shall be provided under Division 26. Study the Electrical drawings and coordinate requirements and quantities with the Electrical Contractor.

N. All electrical apparatus and controls furnished as a part of the HVAC, Plumbing, Fire Protection, etc. work shall conform to applicable requirements under Electrical Section.

O. Each Contractor shall provide the Electrical Contractor with all motor size and wiring requirements within (30) days from date of Contract to allow proper coordination of Trades by the General Contractor.

P. Each Contractor shall verify with the Electrical Contractor available electrical characteristics before ordering any equipment or motors.

Q. Equipment which includes a number of correlated electrical control devices mounted in a single enclosure or on a common base with equipment, shall be supplied for installation completely wired internally with terminal strip ready for external wiring. Unless specifically directed otherwise in the Contract Documents, if these control devices are separately mounted they shall be furnished by the HVAC Contractor and wired by ATC Contractor or Electrical Contractor in accordance with the manufacturer's wiring diagram, as shown on the drawings and as specified hereinafter.

R. All motors shall meet NEMA vibration requirements and shall be less than 0.15 in./sec.

2.3 SHAFT GROUNDING RINGS

1. Shall be maintenance-free, circumferential, conductive micro fiber shaft grounding ring

2. Shall be installed on the AC motor to discharge shaft currents to ground.

3. Similar to AEGIS shaft grounding rings (SGRs).

2.4 MOTORS

A. In accordance with NEMA, IEEE and ANSI 50 Standards.

B. Capacity: Minimum of indicated horsepower and to operate driven devices under all conditions without overload.

C. Provide all of the same manufacturer, except those provided integrally with equipment.

D. Motor type and application (1/2 hp and above):

1. Conditioned areas and heated ventilated areas protected from weather:

a. Squirrel-cage induction type, open drip-proof, NEMA B design, rated for 90 degree C rise over 40 degree C ambient, Class B insulation up to 1 hp and class f insulation above 1 hp, 1.15 service factor, continuous rating per NEMA MG1-1.40.

b. Unless otherwise noted on the mechanical contract drawings or specified.

2. Motors installed outdoors, on roofs and out of building airstreams:

a. Squirrel-cage induction type, totally enclosed fan cooled, NEMA B design, class B insulation, up to 1 hp and Class F insulation above 1 hp 1.15 service factor, continuous duty unless otherwise noted on the contract drawings or specified.

E. Motor shall be 1800 rpm single speed motors unless otherwise noted on the contract drawings.

F. Motor type and application (less than ½ hp).

1. Built in overload protection.

2. Rewinding tap, permanent split capacitor type, unless otherwise noted on the contract drawings or specified.

3. Suitable for service and location.

4. Motor shall be 1800 rpm single speed motors, unless otherwise noted on the contract drawings.

G. Motor voltages:

1. Motors less than ½ hp: Single phase, 60 hertz, 120 volt, AC, unless otherwise indicated on the contract drawings.

2. Motors ½ hp and up. Suitable for 3 phase, 60 hertz, 480 volt, AC power source, unless otherwise indicated on the contract drawings.

H. Motor Efficiency Ratings And Construction

1. Motors 1.0 hp up to 250 hp: Suitable for 3 phase, 60 hertz, 480 volt, AC power source, premium-efficient type, unless otherwise noted on the contract drawings as specified.

2. Guaranteed minimum power factor at full load and rated voltage and guaranteed minimum efficiency at full load and rated voltage when tested in accordance with IEEE Test Procedure 112A, Method B.

3. Premium-efficient type motors shall conform to the following efficiencies:

Nominal Efficiencies For NEMA Premium Efficiency
Motors Rated at 600 Volts or Less

	Open Drip Proof			Totally Enclosed Fan-cooled		
HP	6 pole	4 pole	2 pole	6 pole	4 pole	2 pole
1	82.5	85.5	77.0	82.5	85.5	77.0
1.5	86.5	86.5	84.0	87.5	86.5	84.0
2	87.5	86.5	85.5	88.5	86.5	85.5
3	88.5	89.5	85.5	89.5	89.5	86.5
5	89.5	89.5	86.5	89.5	89.5	88.5
7.5	90.2	91.0	88.5	91.0	91.7	89.5
10	91.7	91.7	89.5	91.0	91.7	90.2
15	91.7	93.0	90.2	91.7	92.4	91.0
20	92.4	93.0	91.0	91.7	93.0	91.0
25	93.0	93.6	91.7	93.0	93.6	91.7
30	93.6	94.1	91.7	93.0	93.6	91.7
40	94.1	94.1	92.4	94.1	94.1	92.4
50	94.1	94.5	93.0	94.1	94.5	93.0
60	94.5	95.0	93.6	94.5	95.0	93.6
75	94.5	95.0	93.6	94.5	95.4	93.6
100	95.0	95.4	93.6	95.0	95.4	94.1
125	95.0	95.4	94.1	95.0	95.4	95.0
150	95.4	95.8	94.1	95.8	95.8	95.0
200	95.4	95.8	95.0	95.8	96.2	95.4
250	95.4	95.8	95.0	95.8	96.2	95.8
300	95.4	95.8	95.4	95.8	96.2	95.8
350	95.4	95.8	95.4	95.8	96.2	95.8
400	95.8	95.8	95.8	95.8	96.2	95.8
450	96.2	96.2	95.8	95.8	96.2	95.8
500	96.2	96.2	95.8	95.8	96.2	95.8

Nominal Efficiencies For NEMA Premium Efficiency
Motors Rated at 5kV or Less

	Open Drip Proof			Totally Enclosed Fan cooled		
HP	6 pole	4 pole	2 pole	6 pole	4 pole	2 pole
250	95.0	95.0	94.5	95.0	95.0	95.0

Nominal Efficiencies For NEMA Premium Efficiency
Motors Rated at 5kV or Less

	Open Drip Proof			Totally Enclosed Fan cooled		
HP	6 pole	4 pole	2 pole	6 pole	4 pole	2 pole
300	95.0	95.0	94.5	95.0	95.0	95.0
350	95.0	95.0	94.5	95.0	95.0	95.0
400	95.0	95.0	94.5	95.0	95.0	95.0
450	95.0	95.0	94.5	95.0	95.0	95.0
500	95.0	95.0	94.5	95.0	95.0	95.0

4. Motors less than 1 hp shall be manufacturer's standard premium efficiency design.

5. Motor nameplate shall be specially marked "energy efficient motor" or similar nomenclature.

6. Motors built in accordance with current NEMA Standard MG-1 except as noted.

   a. Motors NEMA Design B, NEMA T-frame sizes.

   b. Insulation tested by manufacturer, Class F or better. Test per NEMA MG1-12.03.

   c. Temperature rise limits in accordance with NEMA limits for insulation class, service factor and enclosure specified.

I. Materials and Construction:

1. Motors up to 5 hp

   a. Steel motor frames, cast aluminum end brackets, steel terminal box, copper windings.

2. Motors 5 hp and larger:

   a. Cast iron motor frames, cast iron end brackets, cast iron terminal box, copper windings.

3. TEFC Motors

   a. Cast iron motor frames, cast iron end brackets, cast iron terminal box, copper windings, corrosion resistant fan internals, epoxy varnish coated for corrosion protection, cadmium plated hardware.

   b. Severe duty motors:

      1) Cast iron construction (frame, end brackets and terminal box). External hardware, fan and fan cover coated or plated to prevent corrosion or corrosion-resistant material. Air gap surfaces coated

with epoxy or zinc chromate. Shafts with rotating shaft mounted slingers or seals to prevent entry of contaminants at each end. Epoxy insulation system where used in high-moisture and corrosive atmospheres.

4. Explosion proof motors:

   a. UL listed for application or duty.

   b. Motors shall conform to requirements defined in Article 500, 501, 502, 503 of the National Electric Code.

   c. Motor nameplate shall be specifically marked “explosion proof” or similar such nomenclature.

5. Sound-power levels no greater than recommendations of NEMA (MG1-12-49).

J. Motors 1/2 hp and above, conform to following:

1. Bearings: Antifriction type with bearing housings equipped with easily accessible plugged provisions for relubrication. Minimum L-10 life of 100,000 hours based on direct drive equipment. Bearing housings shall be equipped with grease openings for simultaneously adding new grease and purging the old grease. Provide corrosion resistant plugs or caps on grease openings.

2. Belt-connected motors: NEMA foundation slide base and shaft as required for aligning pulleys. Minimum L-10 life based on belt drive shall be 40,000 hrs.

3. Motor enclosure: Suitable for service and location.

2.5 MOTOR DISCONNECT

A. Provide only devices of Specification Grade, UL listed and labeled, manufacturer’s certification to meet applicable Federal Specifications, and to meet NEMA performance standards.

B. Disconnects shall be “Heavy Duty Type”.

C. Single phase disconnect switches: Two pole toggle operated AC manual motor starting switch without overload protection for single phase motors.

D. Three phase disconnect switches: 3 pole fusible or unfusible as required; 250 or 600 volt as required in NEMA 4 enclosures.

E. The operating handle for three phase disconnect switches shall be of the box-mounted type that directly drives the switch mechanism.

F. Three phase disconnect switches shall have a defeatable, front accessible, interlock to prevent the opening of the cover when the switch is in the “ON” position and prevent turning the switch “ON” when the door is open.

G. Solid neutral: Provide as required.

H. Provide ground lug for ground wire termination.

I. All disconnects shall be lockable.

J. Operating handle: Lockable in either open or closed position.

K. All motor disconnects shall be horsepower rated.

L. Feed through or double lugged: UL approved for the purpose.

M. Installation:

1. All switches shall have a nameplate indicating the circuit number feeding the switch. Nameplate shall be laminated black with white letters engraved.

2. Install a motor disconnect switch with every motor unless noted otherwise on mechanical equipment schedules.

2.6 MOTOR CONTROLLERS

A. Manual motor controller:

1. For single phase motors, provide H-O-A switches with thermal overload.

2. 2-speed: Fast-slow-off selector switch with overload protection for each speed, with pilot lights for slow and fast speed.

B. Magnetic motor controller:

1. Provide magnetic contactors with three overload relays, for motor running overload protection, per NEC.

2. 120 Volt holding coil.

3. Provide status pilot light in cover, red for energized. Pilot light shall be operated by an extra interlock (not placed across holding coil). Pilot light shall be long life (130 volt) type 6S6 incandescent lamps.

4. Provide reset button, and Hand-Off-Automatic switch in cover, field convertible to Off-Auto or Start/Stop pushbutton.

5. Provide one set of convertible auxiliary contacts in addition to standard auxiliary holding contacts supplied with each contactor.

6. Provide control transformer 120 volt secondary of sufficient capacity to handle operating coil and associated controls plus 75 volt amps.

7. Provide surface mounted starters in NEMA Type 1 enclosure for indoor applications and NEMA Type 4 enclosure for outdoor applications.

8. Contacts shall be solid-silver cadmium oxide alloy which will not require any filing, dressing or cleaning throughout the life of the control equipment. Bare copper or silver flashed contacts shall not be permitted.

9. Operating coils shall be pressure molded. When a coil fails under over-voltage condition, the motor controller shall drop out.

10. Overload relays shall be of the hand-reset, trip-free variety so that blocking the reset mechanism in the reset position will not prevent the starter from dropping out if the motor is overloaded. This specifically excludes those overload relays which change to automatic reset from hand-reset when the reset mechanism is blocked unless the automatic reset feature can be removed or voided. Accidentally depressing the reset button or mechanism shall not shut off the motor. Overload relays shall not be field convertible from hand to automatic reset type.

11. Disconnect switch shall be provided under Division 26 unless otherwise noted.

12. Where specified, motor hp rated disconnect switches shall be provided in NEMA 1 enclosure for indoor applications and NEMA 4 enclosures for outdoor applications.

13. Provide full coordination between settings or ratings of protective devices in accordance with the NEC.

C. Combination motor controller (only where indicated on the contract drawings or specified).

1. Provide molded case circuit breakers with rotary operating handle and lock-off facility.

2. Restrict opening of switch enclosure by the use of a defeater screw unless switch is in the OFF position.

3. Provide contactors with three overlay relays.

a. 120 Volt holding coil.

b. Provide status pilot light in cover, red for energized. Pilot light shall be operated by an extra interlock (not placed across holding coil) Pilot lights shall be long life (130 volt) type 6S6 incandescent lamps.

4. Provide reset button, and Hand-Off-Automatic switch in cover, field convertible to Off/Auto or Start/Stop pushbutton.

5. Provide one set of auxiliary contacts in addition to standard auxiliary hold contacts supplied with each contactor.

6. Provide control transformer 120 volt secondary of sufficient capacity to handle operating coil and associated controls plus additional 75 volt amps.

7. Time-delay relays shall be adjustable, pneumatic type, 2 to 60 seconds and operate on 120 volts, 60 hertz. They shall have at least one normally open and one normally closed timed contact. The type of operation is as indicated or required.

PART 3 – INSTALLATION

3.1 MOTORS

A. Coordinate with appropriate trades.

1. Motor and base mounting requirements.

2. Motor electrical requirements.

B. Motors shall be installed in accordance with manufacturer's installation instructions.

C. Motors shall be installed in accordance with all applicable codes.

D. Mechanical Contractor shall assist the ATC Contractor in the calibration process of all motor current transformers as detailed in Division 25.

3.2 CONTROLLER

A. Provide all controllers not indicated on Electrical drawings.

END OF SECTION 230513

SECTION 23 0514 – VARIABLE FREQUENCY DRIVES

PART 1 – GENERAL

1.1 RELATED DOCUMENTS

A. Drawings and general provisions of the Contract, including General and Supplementary Conditions, Section 230500 and other Division 1 Specification Sections, apply to this Section.

B. LEED Building General Requirements: The Owner requires the Contractor to implement practices and procedures to meet the project's environmental performance goals, which include achieving LEED Certification. Specific project goals that may impact this area of work include: Use of recycled-content materials; use of locally-manufactured materials; use of low-emitting materials; construction waste recycling; and the implementation of a construction indoor air quality management plan. The Contractor shall ensure that the requirements related to these goals, as defined in the sections below, are implemented to the fullest extent. Substitutions, or other changes to the work proposed by the Contractor or their Subcontractors, shall not be allowed if such changes compromise the stated LEED Building Performance Criteria.

1. Comply with LEED (Leadership in Energy and Environmental Design) Green Building Rating System BD+C, Version 3.

1.2 WORK INCLUDED

A. Furnish and install variable frequency drives (VFDs) for mechanical equipment as scheduled on the drawings and specified herein. The term VFD shall refer to the entire assembly including but not limited to the by-pass.

B. The VFD's shall comply with the latest applicable standards of ANSI, IEEE, NEMA, NEC, UL and City Test Lab. The controllers shall be rated as indicated. As a minimum, the full load output current of the drive shall be equal to the equivalent motor horsepower as listed by NEC Table 430-150.

C. Drive horsepowers shall be minimum size as indicated. Coordinate size with driven equipment manufacturer.

D. Provide UL listed, accessory reactors to be UL listed. Bypass panels shall be constructed of UL recognized components assembled in a UL listed enclosure in strict accordance with the NEC for electrical safety. In addition the assembly shall be UL listed.

1.3 RELATED SECTIONS

A. Examine all drawings and criteria sheets and all other Sections of the Specifications for requirements which affect work under this Section whether or not such work is specifically mentioned in this Section.

B. Section 017419 “Construction Waste Management and Disposal” for requirements related to construction waste management and disposal at the project site.

C. Section 018113 “VOC Limits for Adhesives, Sealants, Paints and Coatings” for restrictions of VOC in adhesives, sealants, paints and coatings.

D. Section 018119 “Construction Indoor Air Quality (IAQ) Management” for requirements during construction for indoor-air-quality management.

1.4 REFERENCES

A. Applicable provisions of the following Codes and Trade Standard Publications shall apply to the work of this Section, and are hereby incorporated into, and made a part of the Contract Documents.

B. Material standards shall be as specified or detailed hereinafter and as follows:

1. IEEE: Institute of Electrical and Electronic Engineers
2. NEMA: National electrical Manufacture’s Association
3. MG 1-78: Motors and Generators
4. NEC: National Electrical Code
5. ANSI: American National Standards Institute
6. UL: Underwriter’s Laboratories

1.5 SUBMITTALS

A. See Section 230500 and General Conditions for additional requirements.

B. Product Data: Provide product description and list of materials, including the following:

1. Harmonic calculations

a. List of all drives.

b. Simplified one line diagram indicating linear as well as drives, transformers and PCC.

c. Technical description of the program used for the calculations.

d. Description of all inputs and outputs from the program.

2. Complete drawings furnished and approved before proceeding with manufacture. Drawings shall consist of a specific bill of materials, connection diagrams and suitable outline drawings showing details necessary to locate conduit stub-ups and field wiring.

a. Details including all labeling.

b. Assembled panel short circuit rating and how it will be labeled.

c. Heat release of the drive.

3. Description of field testing.

a. Proposed schedule of testing indications coordination with occupancy.

4. Manufacturer's Instructions: Indicate installation procedures that ensure acceptable workmanship and installation standards will be achieved.

1.6 QUALITY ASSURANCE

A. Manufacturers must have more than ten (10) years of documents experience in the design, testing and manufacturing of specified or similar products.

B. Manufacturer must provide written certification that the products provided meet or exceed the specification requirements. An executive officer of the company must sign the written certification.

1.7 WARRANTY

A. Attention is directed to provisions of the General Conditions and Supplementary General Conditions regarding guarantees and warranties for work under this Contract.

B. Manufacturers shall provide guarantees for work under this Contract. However, such guarantees shall be in addition to and not in lieu of all other liabilities which the manufacturer and the Contractor may have by Law or by other provisions of the Contract Documents.

C. All materials, items of equipment and workmanship furnished under each Section shall carry the standard warranty against all defects in material and workmanship. Any fault due to defective or improper material, equipment, workmanship or design which may develop shall be made good, forthwith, by and at the expense of the Contractor including all other damage done to areas, materials and other systems resulting from this failure.

D. The Contractor shall guarantee that all elements of the systems provided under his Contract, are of sufficient capacity to meet the specified performance requirements as set forth herein or as indicated.

E. Upon receipt of notice from the Owner's representative of failure of any part of the systems or equipment during the warranty period, the affected part or parts shall be replaced by the Contractor, within three (3) working days, at no cost to the Owner.

F. The Contractor shall furnish a written guarantee covering the above requirements before the final payment is made.

PART 2 – PRODUCTS

2.1 VARIABLE FREQUENCY DRIVES

A. General

1. Provide a complete variable frequency drive (VFD) (in a single enclosure) of capacity, quantity and characteristics as described in this specification and as shown and scheduled on the drawings. Acceptable manufacturers contingent on compliance with specifications are:

   a. 60 HP and Larger **(18-Pulse or Greater Units Only)**

      1) ABB
      2) Yaskawa

      <u>Note</u>: 6-pulse units will be rejected.

   b. 50 HP and Less **(6 Pulse or Greater)**

      1) ABB

      2) Yaskawa

2. All VFDs (6 & 18 pulse) shall be of the same manufacturer.

3. Each drive and assembly (with or without bypasses) shall be U.L. listed and labeled.

   a. Label shall include the AIC rating for the assembly (SSCR) which shall not be less then 100,000 AIC.

   b. Any unit shipped without such label shall be removed from the job with NO EXCEPTIONS. This also includes six pulse drives with or without bypasses.

4. Each drive shall be mounted with it's accessories in a single cabinet.

5. Installation and start-up services for the equipment shall be covered by this specification.

6. Input control signal shall be compatible with automatic controls and/or building automation control system. Submit written, signed off coordination with submittal.

7. Complete drawings shall be furnished and approved before proceeding with manufacture. Drawings shall consist of a specific bill of materials, connection diagrams and suitable outline drawings showing details necessary to locate conduit stub-ups and field wiring.

8. The VFD shall comply with the latest applicable standards of ANSI, IEEE and NEMA. The controllers shall be rated as shown in the drawings. As a minimum, the full load output current of the drive shall be equal to the equivalent motor horsepower as listed by NEC Table 430-150.

9. Drive horsepowers shall be minimum size as indicated. Coordinate size with driven equipment manufacturer.

10. The VFD manufacturer shall supply with submittal information, harmonic calculations made in accordance with IEEE 519-1992 Standards showing the specified THVD, line notching and the specified THCD limits are met. Calculations shall assume worst case system conditions. System 1-line, 480V transformer data, standby generator data, and primary fault current data required to make these calculations are provided in the system short circuit study and can be obtained from the Electrical Contractor. The submittal shall include, as a minimum, the following information:

    a. All input data and assumptions.

    b. Explanation of method used to perform the analysis.

    c. All calculations and computer printouts used in the analysis, including input documentation.

        1) List all drives and accessories.
        2) Explanation of all inputs
        3) Explanation of all outputs.

    d. A system impedance diagram based on the Electrical one-line diagrams. It shall be the drive manufactures responsibility to obtain all information required.

    e. All calculations shall be in accordance with IEEE 519 with all drives at 100% speed. The point of common coupling shall be the secondary connection of the transformer supplying that group of devices. These calculations shall be done with the transformer loaded to no more than 70% of its nominal capacity (without fans). These calculations shall also be done with all 18-pulse or greater drives running as well as the smaller drives running.

    f. Each point of common coupling shall be defined as the secondary side of the transformer that feeds that group of drives. At the point of common coupling, the following numbers shall meet with the maximum load on the transformer no greater than 70% of its nominal capacity.

        1) **Total harmonic voltage distortion is less than 3%**

        2) **Total harmonic current distortion is less than 5% and harmonic table requirements I_{SC} / I_L <20**

3) **<u>Note</u>: 6-pulse drives will not be accepted on 60 HP drives or larger, even if this calculation is met.**

g. A detailed description of the tests, procedures and supporting calculations required to substantiate the installed systems compliance with the specified THD limits.

1) The description shall include information on the proposed test equipment and test conditions.

2) Include the name and qualifications of the firm which will conduct the field tests.

h. **Submittals without calculations will not be reviewed**.

11. Drives shall be capable of the full rated motor horsepower at all carrier frequencies of that drive.

B. Construction

1. VFDs 60 HP and Larger

a. VFDs 60 HP and larger shall be 18-pulse (or greater) input. Provide data and calculations showing the drive harmonics do not exceed the following numbers <u>at the power connection to the drive.</u>

1) Total harmonic voltage distortion: Less than 3%

2) Total harmonic current distortion: Less than 5% and harmonic table requirements for $I_{SC}/I_L < 20$.

<u>Note</u>: These are the maximum harmonics that can be generated by each of these drives.

b. The use of the following devices is permitted:

1) A.C. Line reactors
2) DC chokes
3) KMP Transformers
4) KMP + XFMR Filter Transformers

c. The use of the following devices is <u>not permitted</u>:

1) Passive filters.
2) Broad band filters.

2. VFDs 50 HP and Less

a. VFDs 50 HP and less shall be 6-pulse (or greater) input. Provide data and calculations showing the drive harmonics.

b. 5% line reactors shall be provided on each drive as a minimum.

c. The use of the following devices is not permitted:

1) Passive filters.
2) Broad band filters.

d. The use of the following devices is permitted:

1) Changing additional drives to 18 pulse or greater.

3. Harmonic Table

I_{SC} / I_L	Harmonic Order (Odd Harmonics)					THD
	H<11	11<h17	17<h23	23<h35	35<h	
<20	4.0	2.0	1.5	0.6	0.3	5.0
20-50	7.0	3.5	2.5	1.0	0.5	8.0
50-100	10.0	4.5	4.0	1.5	0.7	12.0
100-1000	12.0	5.5	5.0	2.0	1.0	15.0
>1000	15.0	7.0	6.0	2.5	1.4	20.0

4. 18 Pulse Transformer

a. Auto transformer

1) Voltage 208.
2) Input variation less than 3%.
3) Insulation Class 220°C
4) Temperature rise 150°C
5) With 7.5% AC input line reactors for proper current balance.
6) Output Voltage unbalance less than 2% for each bridge
7) Output current shall be 1/3 of rated input

b. Isolation Transformer.

1) Voltage 208.
2) Input variation less than 3%.
3) Output Voltage unbalance less than 2% for each bridge
4) Output current shall be 1/3 of rated input

5. All Drives

a. The VFD shall be of the pulse width modulated (PWM) design converting the fixed utility voltage and frequency to a variable voltage and frequency

output via a 2-step operation. VFDs utilizing a 3rd power section are not acceptable. Efficiency shall exceed 96% at 100% speed and load. Line side displacement power factor shall exceed (0.95) regardless of speed and load. The VFD shall be rated for 110% current for (1) minute for variable torque loads and 150% current for (1) minute for constant torque loads.

b. VFDs located indoors shall be housed in a signal NEMA 1 metal enclosure (including 18-pulse transformer, filters, line reactor, and other required accessories.

c. Drives located outside shall be provided with a single NEMA 3R enclosure and an independent heating and cooling system to maintain manufacturer's ambient operating conditions.

d. Drives located other than outside (submit list of all drives individually indicating):

1) Space drive is located.

2) Space ventilation is adequate, space air conditioning is adequate or the size of the cooling provided in the drive.

3) Space heating is adequate or the size of the heater provided in the drive.

e. Standard operating conditions shall be:

1) Incoming 3-phase 208 VAC power, +5% or -10%, 60 Hz.

2) Humidity 0 to 95% (non-condensing and non-corrosive).

3) Altitude 0'-0" to 3,300'-0" above sea level.

4) Ambient temperature 0° to 40°C.

f. VFDs shall include the following system interfaces:

1) Speed reference interface with a differential amplifier or isolated input 0-10 VDC or 4-20 mADC signal.

2) Run relay with an isolated set of Form C contacts.

3) Minimum of 2 programmable contacts.

4) Trip contacts (Form C).

5) VFD will accept an external trip contact and indicate so on the display.

6) Dedicated terminal blocks for interface with maintained remote start contacts.

7) Output signal proportional to output frequency (0-10 VDC or 4-20 mADC).

8) Output signal proportional to output current (0-10 VDC or 4-20 mADC).

9) Provided with communications chip to provide complete interface with the ATC control and automation system.

g. The VFD shall include the following protective features:

1) Lockable Fused disconnect (or breaker) rated for 100,000 AIC.

2) Electronic instantaneous overcurrent protection.

3) DC bus undervoltage protection.

4) DC bus overvoltage protection.

5) Ability to withstand output line-to-line short circuits without component failure.

6) Status indication via an LED display of the following protective functions:

a) DC Bus Undervoltage
b) Overcurrent
c) DC Bus Overvoltage
d) Controller Overtemperature
e) Overload
f) Overload Warning
g) Overfrequency and Phase Loss
h) A single light to indicate a VFD trip is not acceptable.

7) Overload capability shall be 110% of the inverter rating for (1) minute.

8) Selectable auto restart.

9) VFD will catch a motor spinning in the forward or reverse direction upon starting.

10) Upon loss of the input signal (4-20 mA), the drive will stop or go to preset speed.

h. Standard adjustments shall include:

1) Minimum frequency (4-60 Hz)

2) Maximum frequency (40-120 Hz)

3) Minimum of three (3) preset speeds (4-120 Hz) initiated by contact closures

4) Minimum of three (3) acceleration times (2-300 seconds)

5) Minimum of three (3) deceleration times (2-300 seconds)

6) Minimum speed dwell(stall speed) time (0-18 seconds)

7) Minimum stall speed (fraction of rpm)

8) Voltage boost (0-40V) for starting torque control

9) Adjustable Carrier frequency 700-8,000 Hz for motor noise reduction or flexible switching technology. This adjustment shall be without derating the drive or motor.

10) Current limit (70-120%)

11) Critical frequency avoidance ([2] bands with 10 Hz adjustable widths)

i. Door mounted operator controls and status indication from the LED display shall include:

1) Run/stop selection and LED indication (keypad or remote)
2) Speed control selection and LED indication
3) Forward/Reverse selection
4) Manual speed adjustment
5) Frequency meter
6) Motor RPM
7) Ammeter
8) Output voltage
9) Elapsed time meter

j. The keypad shall have an LED display. The reverse button and the programming functions may be locked out if desired.

6. The following list of options shall be included:

a. Input lockable disconnect rated 100,000 AIC.

b. Thermal motor overcurrent relay.

c. Bypass which includes an output contactor electrically and mechanically interlocked with a bypass contactor, run relay including control logic, status lights and a thermal motor overcurrent relay. The complete bypass system and Inverter/Off/Bypass selector switch shall be packaged in a single VFD enclosure. The bypass shall include a starter.

d. Drives may be provided without bypass only when

1) The drawing states that the specific drive shall not have bypass.

2) When the fan is part of a redundant configuration.

3) When the pump is part of a redundant configuration.

e. Cooling tower fans shall always have a bypass.

f. Electronics shall allow VFD to follow discrete increase speed and discrete decrease speed contact closures from a photohelic or similar device.

g. 120V control transformer and circuitry.

h. Output line reactors or output filters when the drive location and the motor are more then 100 feet apart.

i. Interior heaters shall be provided to maintain the minimum drive temperature when the drive is off.

j. A Customer Interlock Terminal Strip – provide a separate terminal strip for connection of fire, smoke, freeze contacts and external start command. All external interlocks and start/stop contacts shall function with drive in hand, auto or bypass.

1) Damper control circuit shall be operable in the hand, auto and bypass.

7. Service

a. The VFD manufacturer shall provide a start-up service package for all VFDs provided. Service shall include inspector for final adjustment, operational checks, and a final report for record purposes. The service package shall include a (1) year parts and labor warranty and 2 year parts warranty each from date of written acceptance and be performed by local factory trained service engineers. The service center must be permanently located within (200) miles of the job site and able to provide 24-hour service.

8. Protection

a. The VFD shall be protected against damage at all times. The drive shall be stored in a clean, dry environment with temperature and humidity within the range as specified by the drive manufacturer. Space heaters shall be energized controlled storage as recommended by the manufacturer. Storage space shall be environmentally controlled.

9. Factory Tests and Checks

a. VFD power semiconductors and diodes shall be 100% inspected and tested, including load testing.

b. Small signal semiconductors, resistors, capacitors and diodes shall be lot sampled. Testing shall include parameter, as well as functional characteristics.

c. All printed circuit boards shall be tested under a temperature cycling (0°C to +65°C) 24-hour load test and then functionally tested via fault finder bench equipment prior to unit installation.

d. All final assemblies shall be tested at full load with application of line-to-line and line-to-ground bolted faults. The VFD shall trip electronically without device failure.

e. After all tests have been performed, each VFD shall undergo a 24-hour burn-in test. The drive shall be burned-in at 100% inductive or motor load for (24) hours without an unscheduled shutdown.

10. A (1) day training course for Owner's personnel shall be presented by representatives of the manufacturer at the jobsite.

PART 3 – EXECUTION

3.1 VFD INSTALLATION

A. Install in accordance with manufacturer recommendations, Contract Drawings, and reviewed submittals.

B. Install to meet the Local and State Electrical Code and so as to ensure easy accessibility for service, removal, or replacement of all components.

C. Provide supplemental steel, support, rods and hangers necessary to hang or mount VFDs.

D. Receive and inspect VFDs to ensure they are without defect. Defective or damaged VFDs shall be returned to the manufacturer.

E. Protect equipment to prevent damage from water, dirt, or accident. Protection shall include, but not be limited to, temporary plastic wrap to maintain equipment in original factory condition.

F. Wiring installation and handling shall be in accordance with manufacturer's recommendations.

G. Provide field testing (as described in Paragraph F, of this above Section).

3.2 FIELD TESTS AND CHECKS

A. Testing, checkout and start-up of the VFD equipment shall be performed under the technical direction of the manufacturer's service engineer. Under no circumstances are any portions of the drive system to be energized without authorization from the manufacturer's representative.

B. The Contractor shall provide independent harmonic testing by an independent testing company. Provide readings with printouts of the harmonic current at each harmonic as well as the total voltage distortion. The following readings shall be provided:

1. At each point of common coupling:

   a. With all drives running with load
   b. With all drives off

2. At the power connection to each drive:

   a. With the drive running loaded
   b. With drive off

3. All the above data shall be submitted to the Architect for review. If these tests shown that the drives are not in compliance with the Specifications, the drive manufacturer shall make all changes required to comply with the Specifications at no cost to the Owner. If required, this could mean replacing the drives that are not in compliance.

4. A copy of all tests and checks performed in the field, complete with meter readings and recordings, where applicable, shall be submitted to the Owner for this record.

END OF SECTION 230514

SECTION 23 0516 – PIPE EXPANSION

PART 1 - GENERAL

1.1 RELATED DOCUMENTS

A. Drawings and general provisions of the Contract, including General and Supplementary Conditions, Section 230500 and other Division 1 Specification Sections, apply to this Section.

B. LEED Building General Requirements: The Owner requires the Contractor to implement practices and procedures to meet the project's environmental performance goals, which include achieving LEED Certification. Specific project goals that may impact this area of work include: Use of recycled-content materials; use of locally-manufactured materials; use of low-emitting materials; construction waste recycling; and the implementation of a construction indoor air quality management plan. The Contractor shall ensure that the requirements related to these goals, as defined in the sections below, are implemented to the fullest extent. Substitutions, or other changes to the work proposed by the Contractor or their Subcontractors, shall not be allowed if such changes compromise the stated LEED Building Performance Criteria.

1. Comply with LEED (Leadership in Energy and Environmental Design) Green Building Rating System BD+C, Version 3.

1.2 WORK INCLUDED

A. Furnish and install all necessary offsets, joints, expansion loops, compensators, anchors and guides so that no stress is placed on the piping systems or equipment due to thermal expansion.

B. Make proper provision for expansion and contraction in all parts of piping systems wherever possible by means of pipe bends, pipe offsets, swing connections or changes in direction of piping. Where piping network cannot be employed to absorb expansion and contraction in the piping systems, provide expansion joint compensators.

C. Expansion compensator elements shall be as specified herein and shall be selected by the manufacturer to withstand system pressure and temperature conditions and to absorb thermal expansion of the piping. Use of expansion compensators in non-accessible locations shall not be permitted.

1.3 RELATED SECTIONS

A. Examine all drawings and criteria sheets and all other Sections of the Specifications for requirements which affect work under this Section whether or not such work is specifically mentioned in this Section.

B. Refer to Section 230548 – Mechanical Vibration Controls and Seismic Restraints for specific information related to and affecting this Section.

C. Refer to Section 230527 – Hangers and Supports.

D. Section 017419 “Construction Waste Management and Disposal” for requirements related to construction waste management and disposal at the project site.

E. Section 018113 “VOC Limits for Adhesives, Sealants, Paints and Coatings” for restrictions of VOC in adhesives, sealants, paints and coatings.

F. Section 018119 “Construction Indoor Air Quality (IAQ) Management” for requirements during construction for indoor-air-quality management.

1.4 REFERENCES

A. Applicable provisions of the following Codes and Trade Standard Publications shall apply to the work of this Section, and are hereby incorporated into, and made a part of the Contract Documents.

B. Material standards shall be as specified or detailed hereinafter and as follows:

1. ASME B31.1 – Power Piping.

2. ASME B16.5 – Pipe Flanges and Flanged Fittings.

3. ASTM A 269 – Standard specification for Seamless and Welded Austenitic Stainless Steel Tubing for General Service.

4. EJMA (STDS) – Standards; Expansion Joint Manufacturers Association; 1993.

5. MIL-E-17814 – Expansion Joints, Pipe, Slip-Type, Packed

1.5 SUBMITTALS

A. See Section 230500 and General Conditions for additional information.

B. Product Data:

1. Flexible Pipe Connectors: Indicate maximum temperature and pressure rating, face-to-face length, live length, hose wall thickness, hose convolutions per foot and per assembly, fundamental frequency of assembly, braid structure and total number of wires in braid.

2. Expansion Joints: Indicate maximum temperature and pressure rating and maximum expansion compensation.

C. Design Data: Indicate selection calculations.

D. Constant force hangers shall include the installed load, actual travel and total travel as a minimum.

E. Complete expansion, stress, and seismic calculations.

F. Manufacturer's Instructions: Indicate manufacturer's installation instructions, special procedures and external controls.

G. Project Record Documents: Record installed locations of flexible pipe connectors, expansion joints, anchors and guides.

H. Maintenance Data: Include adjustment instructions.

1.6 QUALITY ASSURANCE

A. Manufacturer: Company specializing in manufacturing products of the type specified in Part 2 – Products.

B. Installer: Company specializing in performing work of the type specified in this section, with documented experience.

C. Welders: Certify in accordance with ASME.

1.7 REGULATORY REQUIREMENTS

A. Conform to ASME B31.9 code for installation of piping system and ASTM F708 for design and installation of pipe supports.

B. Welding Materials and Procedures: Conform to ASME (BPV IX) and applicable state labor regulations.

1. Provide certificate of compliance from authority having jurisdiction, Indicating approval of welders.

1.8 DELIVERY, STORAGE AND HANDLING

A. All expansion compensators shall be delivered in containers and shall be kept in a dry and protected area.

B. All anchors and guides, where exposed, shall be given 2 coats of rust resistant paint of a color selected by the Architect prior to installation.

1.9 ENVIRONMENTAL

A. Do not paint or install expansion compensators, anchors or guides when:

1. Environmental conditions are outside the specific limitations of the referenced codes and/or manufacturer's recommendations.

PART 2 – PRODUCTS

2.1 ENGINEERING SERVICES

A. The Contractor shall retain a registered Professional Engineer licensed to practice in the project state to review all loads imposed on the building structure and piping system to assure that no points are overstressed.

B. The maximum allowable stress shall be 15,000 psi for cold water, hot water, condensate, and steam and the maximum allowable stress shall be 2500 psi for generator exhaust piping if pipe material is low carbon steel A53 B or A106 B (Marks' Standard Handbook for Mechanical Engineers, Tenth Edition).

C. The Contractor shall submit shop drawings with calculations (with P.E. stamp) detailing the proposed anchor locations for review.

D. All anchor details and forces shall be submitted to the project structural engineer for review prior to any installation.

2.2 GENERAL

A. Make proper provision for expansion and contraction in all parts of piping systems:

1. Steam and condensate (all pressures)
2. Hot water
3. All under ground piping
4. Emergency Generator exhaust.
5. Relief vents
6. Other piping

B. Wherever possible, provide expansion and contraction by means of pipe bends, pipe offsets, swing connections or changes in direction of piping.

C. Where piping network cannot be employed to absorb expansion and contraction in the piping systems, provide expansion joint compensators. Securely anchor all piping utilizing expansion loops and joints to the building structure with steel angles, properly braced and welded to the pipe.

D. Furnish and install expansion compensators for hot water piping, for all steam and condensate piping, steam vents and for all emergency generator engine exhaust.

E. Acceptable manufacturers subject to compliance with the specifications shall be as follows:

1. Expansion compensators larger than 4".

   a. American Boa, Inc.
   b. Metraflex
   c. Adsco Manufacturing
   d. Senior Flexonics Pathway

2. Expansion compensators 4" and smaller.

a. American Boa, Inc.
b. Metraflex
c. Keflex Quadra-Side high pressure
d. Senior Flexonics Pathway
e. Robertshaw-Fulton
f. PHD Manufacturing, Co.

3. Guides

a. Keflex, Inc.
b. Metraflex
c. Robertshaw-Fulton
d. Senior Flexonics Pathway
e. PHD Manufacturing, Co.

4. Constant Force Hangers

a. ANVIL International, Inc.
b. Piping Technology & Products Inc.
c. Piping Accessories, Inc.
d. Rilco Manufacturing Co.

F. Use of expansion compensators in non-accessible locations shall not be permitted.

G. Temperature and pressure suitable for the service.

2.3 ANCHORS, GUIDES AND EXPANSION COMPENSATION

A. Expansion compensators: water and steam larger than 4"

1. Water: Expansion joints shall be of the corrugated multi-ply bellows type formed hydraulically from metallic tubes with longitudinal welded seams. The middle plies shall be spiral wound and act as a labyrinth seal, and shall be of packless, leakproof, all-welded construction and maintenance free. Bellows shall be minimum 20 gauge up to 6" and 18 gauge for pipes larger than 6". If joint will be exposed to salt (e.g., in manhole, direct buried, marine), material shall be Inconel 625, otherwise material shall be 321 stainless steel. End fittings shall match pipe schedule as specified. Compensators shall be equipped with setscrew and drain holes and shall have steel casing.

2. Steam: Expansion joints shall be of the corrugated multi-ply bellows type formed hydraulically from metallic tubes with longitudinal welded seams, and shall have telescopic shrouds to snugly fit around the bellows. The middle plies shall be spiral wound and act as a labyrinth seal, and shall be of packless, leakproof, all-welded construction and maintenance free. Bellows shall be minimum 20 gauge up to 6" and 18 gauge for pipes larger than 6". If joint will be exposed to salt (e.g., in manhole, direct buried, marine), material shall be Inconel 625, otherwise material shall be 321 stainless steel. End fittings shall

match pipe schedule as specified. Compensators shall be equipped with setscrew and drain holes and shall have steel casing.

3. Steam (100 psi or more): Expansion joints shall be of the corrugated multi-ply bellows type formed hydraulically from metallic tubes with longitudinal welded seams, and shall have telescopic shrouds to snugly fit around bellows. The middle plies shall be spiral wound and act as a labyrinth seal, and shall be of packless, leakproof, all-welded construction and maintenance free. Bellows shall be minimum 20 gauge up to 6" and 18 gauge for pipes larger than 6". End fittings shall match pipe schedule as specified. Compensators shall be equipped with setscrew and drain holes and shall have steel casing. For steam systems at 100 psi or more, expansion joints shall be externally pressurized multi-ply type bellows and shall be Inconel 625 unless specifically noted otherwise.

4. Compensators shall be fitted with lightweight reinforcing rings to reinforce bellows. Compensators shall be suitable for pressures and temperatures indicated under pipe specifications.

B. Expansion compensators: water and steam 4" and smaller.

1. Water: Expansion joints shall be of the corrugated multi-ply bellows type formed hydraulically from metallic tubes with longitudinal welded seams. The middle plies shall be spiral wound and act as a labyrinth seal, and shall be of packless, leakproof, all-welded construction and maintenance free. Bellows shall be minimum 20 gauge up to 6" and 18 gauge for pipes larger than 6". If joint will be exposed to salt (e.g., in manhole, direct buried, marine), material shall be Inconel 625, otherwise material shall be 321 stainless steel. End fittings shall match pipe schedule as specified. Compensators shall be equipped with setscrew and drain holes and shall have steel casing.

2. Steam: Expansion joints shall be of the corrugated multi-ply bellows type formed hydraulically from metallic tubes with longitudinal welded seams, and shall have telescopic shrouds to snugly fit around the bellows. The middle plies shall be spiral wound and act as a labyrinth seal, and shall be of packless, leakproof, all-welded construction and maintenance free. Bellows shall be minimum 20 gauge up to 6" and 18 gauge for pipes larger than 6". If joint will be exposed to salt (e.g., in manhole, direct buried, marine), material shall be Inconel 625, otherwise material shall be 321 stainless steel. End fittings shall match pipe schedule as specified. Compensators shall be equipped with setscrew and drain holes and shall have steel casing.

3. Steam (100 psi or more): Expansion joints shall be of the corrugated multi-ply bellows type formed hydraulically from metallic tubes with longitudinal welded seams, and shall have telescopic shrouds to snugly fit around the bellows. The middle plies shall be spiral wound and act as a labyrinth seal, and shall be of packless, leakproof, all-welded construction and maintenance free. Bellows shall be minimum 20 gauge up to 6" and 18 gauge for pipes larger than 6". End fittings shall match pipe schedule as specified. Compensators shall be equipped with setscrew and drain holes and shall have steel casing. For steam systems at

100 psi or more, expansion joints shall be externally pressurized multi-ply type bellows and shall be Inconel 625 unless specifically noted otherwise.

C. Expansion Compensators: Emergency Generator Exhaust

1. Expansion joints for emergency generator exhaust piping shall be of the corrugated multi-ply bellows type formed hydraulically from metallic tubes with longitudinally welded seams. The middle plies shall be spiral wound and act as a labyrinth seal, and shall be of packless, leakproof, all-welded construction and maintenance free. The wall thickness and material shall be suitable for applicable pressures and temperatures. Provide an inner liner to protect the bellows from vibration due to high velocity gas. End fittings shall match pipe schedule as specified. Compensators shall be equipped with setscrew and drain holes and shall have steel casing.

D. Constant Force Hangers

1. Constant force support hangers shall be provided for the emergency generator exhaust piping as determined by the stress and seismic analysis. Constant force hangers shall be pre-engineered to meet the loads and expansion for the vertical risers and off sets if any.

2. The total travel for constant support hangers will be equal to actual travel plus 20%. In no case will the difference between actual and total travel be less than 1 inch. The constant support hanger will have travel scales on both sides of the support frame to accommodate inspections.

3. Constant support hangers should be individually calibrated before shipment to support the exact load specified. The calibration record of constant support shall be maintained for a period of 20 years to assist the customer in any redesign of the piping system. Witness marks shall be stamped on the Load Adjustment Scale to establish factory calibration reference point.

4. No less than 10% of the adjustment should be provided either side of the calibrated load for plus or minus field adjustment. A load adjustment scale shall be provided to aid the field in accurate adjustment of loads. Additionally, the constant support should be designed so that load adjustments can be made without use of special tools and not have an impact on the travel capabilities of the supports.

5. Constant supports shall be furnished with travel stops which shall prevent upward and downward movement of the hanger. The travel stops will be factory installed so that the hanger lever is at the “cold” position. The travel stops will be of such design as to permit future re-engagement, even in the event the lever is at a position other than “cold”, without having to make hanger adjustments.

6. Protection saddles shall be manufactured from alloy steel with weld-in center plate for use on the insulated high temperature piping similar to ANVIL International, Inc. Fig. 165A.

E. Guides

1. Pipe guides shall be of spider and sleeve type to insure multiplanar guiding and to allow complete insulation of the piping and shall be covered inside and outside with protective coating. Top half shall be removable.

2. Guides shall be installed in accordance with "Standards of the Expansion Compensators Mfrs. Assn.", latest edition.

PART 3 - EXECUTION

3.1 INSTALLATION

A. All mains and risers having expansion offsets or compensators shall be securely anchored to the building construction in such a manner as to throw all expansion towards the offsets or joints.

B. All anchors shall be constructed from heavy steel and connected to the building construction. Anchors shall be furnished with turnbuckles or other suitable means for adjustment.

C. Contractor shall be responsible for any additional structural members that may be required for proper installation of hangers, anchors, guides and supports.

D. The method of securing the anchors to the building construction must be approved by the Architect prior to installation.

END OF SECTION 230516

SECTION 23 0519.10 – METERS

PART 1 – GENERAL

1.1 RELATED DOCUMENTS

A. Drawings and general provisions of the Contract, including General and Supplementary Conditions, Section 230500 and other Division 1 Specification Sections, apply to this Section.

B. LEED Building General Requirements: The Owner requires the Contractor to implement practices and procedures to meet the project's environmental performance goals, which include achieving LEED Certification. Specific project goals that may impact this area of work include: Use of recycled-content materials; use of locally-manufactured materials; use of low-emitting materials; construction waste recycling; and the implementation of a construction indoor air quality management plan. The Contractor shall ensure that the requirements related to these goals, as defined in the sections below, are implemented to the fullest extent. Substitutions, or other changes to the work proposed by the Contractor or their Subcontractors, shall not be allowed if such changes compromise the stated LEED Building Performance Criteria.

1. Comply with LEED (Leadership in Energy and Environmental Design) Green Building Rating System BD+C, Version 3.

1.2 WORK INCLUDED

A. All meters and flow elements.

B. Secure all permits and local/state approvals for the installation of all components included under this Section.

1.3 RELATED SECTIONS

A. Examine all drawings and criteria sheets and all other Sections of the Specifications for requirements which affect work under this Section whether or not such work is specifically mentioned in this Section.

B. Section 017419 "Construction Waste Management and Disposal" for requirements related to construction waste management and disposal at the project site.

C. Section 018113 "VOC Limits for Adhesives, Sealants, Paints and Coatings" for restrictions of VOC in adhesives, sealants, paints and coatings.

D. Section 018119 "Construction Indoor Air Quality (IAQ) Management" for requirements during construction for indoor-air-quality management.

1.4 REFERENCES

A. Applicable provisions of the following Codes and Trade Standard Publications shall apply to the work of this Section, and are hereby incorporated into, and made a part of the Contract Documents.

B. ASME: American Society of Mechanical Engineers

C. ANSI: American National Standards Institute

1. B16.1: Cast Iron Pipe Flanges and Flanged Fittings
2. B16.3: Malleable Iron Threaded Fittings
3. B16.4: Cast Iron Threaded Fittings
4. B16.5: Pipe Flanges and Flanged Fittings
5. B16.22: Wrought Copper and Copper Alloy Solder Joint Pressure Fittings
6. B31.1: Power Piping

1.5 SUBMITTALS

A. See Section 230500 and General Conditions for additional requirements.

B. Product Data: Include steam/condensate specialties, pipe fittings and accessories. Provide manufacturers catalogue information.

C. Manufacturer's Installation Instructions: Indicate hanging and support methods, joining procedures.

D. Maintenance Data: Include installation instructions, spare parts lists, exploded assembly views.

1.6 QUALITY ASSURANCE

A. Installer: Company specializing in performing work of the type specified in this section, with documented experience.

1.7 REGULATORY REQUIREMENTS

A. Conform to ASME B31.9 code for installation piping systems.

B. Welding Materials and Procedures: Conform to ASME (BPV IX) and applicable state labor regulations.

1.8 DELIVERY, STORAGE AND HANDLING

A. Provide temporary end caps and closures piping and fittings. Maintain in place until installation.

B. Protect piping systems and specialties from entry of foreign materials by temporary covers, completing sections of the work, and isolating parts of completed system.

1.9 ENVIRONMENTAL

A. Do not install equipment when environmental conditions are outside the specific limitations of the referenced codes and manufacturer's recommendations.

PART 2 – PRODUCTS

2.1 GENERAL

A. Provide flow elements and meters as indicated and or specified.

2.2 WATER TREATMENT END BLEED METERS

A. See water treatment section of the specification.

2.3 FLOW ELEMENTS (Flow Indicating Assemblies)

A. Acceptable manufacturers subject to compliance with the specifications.

1. Preso
2. Ellison Instrument Div.
3. Dieterich Standard Corp.
4. Barco
5. Onicon
6. Foxboro

B. Sensing system components

1. Provide self-averaging annular sensor flow metering stations

a. At each pump
b. At each chiller
c. At each cooling tower
d. At each air handling unit coil
e. At mains
f. All major piping distribution branches.
g. Where shown on drawings

h. Exceptions:

1) Hydronic Locations with flow control balancing valves with meter taps.

2. Flow metering systems shall include annular sensors with self-averaging interpolating tube design at each flow station and a portable meter set supplied by one manufacturer.

3. Each annular measuring station shall be complete with safety shutoff valves, quick coupling connections, and a tag showing designed flow rates, meter readings for designed flow rates, metered fluid, line size and tag, and station or location number.

4. Annular measuring sensor shall be made of 304 stainless steel.

5. Stations shall be either nipple suction or weld insert type, rated to 300 psi at 400°F. Annular measuring stations shall be rotable sensing elements so that all pressure sensing ports can be pointed downstream when station is not in use.

6. Permanent pressure loss to the system shall not exceed 5" of water column (0.42 foot) of head on sizes over 1 1/2". Accuracy of the flow measuring elements shall be ±2.3%, as verified by independent laboratory reports.

C. Furnish portable differential pressure meter sets compatible with the primary elements capable of measuring direct differential pressure which shall then be converted to flow rate from a master chart.

1. Differential pressure meter sets shall be as follows:

a. Meter sets shall be of the single diaphragm type not requiring a fill fluid, shall have a 6" dial pointer indicator, and shall have wetted metal parts of only 304 stainless steel.

b. Meter set shall include a variable pulsation dampening control, an integral equalizing valve, and (2) bleed valves.

1) Each meter set shall be supplied complete with a master chart for direct conversion of meter readings to GPM, rustproof carrying case, and (2) 10'-0" rubber test hoses with brass valves for quick connections to annular sensors.

2) Meter shall become property of the Owner immediately after balancing and completion of work under this Contract is completed.

3) Submit a signed receipt of delivery of meter to the Architect for his records.

2.4 BTU MEASUREMENT SYSTEM

A. Acceptable manufacturers subject to compliance with the specifications.

1. Onicon

B. The entire BTU Measurement System shall be similar to , ONICON Incorporated, and shall consist of:

1. A turbine flow meter
2. Two solid state temperature sensors
3. A BTU meter
4. Thermowells
5. All required mechanical installation hardware
6. Color-coded interconnecting cable.

C. The entire system shall be serialized and include a factory calibration of the complete system.

D. All equipment shall be covered by manufacturer's two-year warranty.

E. BTU Meter

1. Provide a system similar to Onicon System-10 BTU Meter.

2. The BTU meter electronics shall be housed in a steel 8"x10"x4" NEMA-13 enclosure and shall include a front panel mounted two-line LCD display for indication of BTU total, BTU rate, flow rate, and supply / return temperatures.

3. An internal 120 VAC or 24 VAC power supply shall be included to provide power to the BTU meter electronics and the turbine flow meter.

4. The BTU meter shall be compatible with Johnson Controls N2 protocol, Siemens' P1, LonWorks and BACNET MSTP Communications and shall provide the following information via the N2 bus:

   a. Total thermal energy transfer
   b. Thermal energy rate
   c. Supply temperature
   d. Return temperature
   e. Liquid flow rate
   f. Liquid flow total.

F. Temperature Sensors

1. Temperature sensors shall be calibrated and matched for the specific temperature range for each application.

2. The calculated differential temperature used in the energy calculation shall be accurate to within + 0.150F (including the error from individual temperature sensors, sensor matching, input offsets, and calculations).

G. Flow Meter

1. The turbine flow meter shall sense the turbine rotation by means of electronic impedance sensing (magnetic sensing not acceptable).

2. Each flow meter shall be individually wet calibrated and tagged against a volumetric standard accurate to within 0.1% and traceable to the U.S. National Institute of Standards and Technology (NIST).

3. Flow meter accuracy shall be within + 0.5% at calibrated typical flow rate and shall be within + 2% of reading over a 50:1 range from 0.4 ft/s through 20.0 ft/s velocity

a. 1-1/4" and larger with 30 diameters of straight run pipe available for installation

1) Similar to ONICON Model F-1100 Single Turbine Insertion Flow Meter, Frequency Output

b. For line sizes 2-1/2" and larger with less than 30 diameters of straight run pipe available for installation

1) Similar to ONICON Model F-1200 Dual Turbine Insertion Flow Meter, Frequency Output

4. Insertion style flow meters shall be provided with all installation hardware necessary to enable installation and removal of flow meter without system shutdown. No special tools shall be required for insertion or removal of the meter.

5. Flow meter shall be rated for line pressure up to 400 PSI.

2.5 STEAM METERS

A. Acceptable manufacturers subject to compliance with the specifications.

1. EMCo
2. Yokagawa
3. Onicon

B. Steam Meter

1. Provide steam meters with integral transmitter where shown or as scheduled.

2. Meter shall be independent from the utility meters.

3. Furnish and install a flanged inline vortex shedding flow meter similar to Onicon F-2000 series Vortex Mass Flow Meter complete with integral density compensation to provide direct mass steam flow output.

4. The flow meter shall be sized by the manufacturer for each specific application and installed according to manufacturer's recommendations.

5. Install meter in accordance with manufacturer's recommended straight pipe run requirements (including a flow straightener, if required). Provide lateral and horizontal supports as required to minimize vibration at the meter location.

6. The meter shall be constructed of stainless steel and suitable for installation into 300 psig rated steam system including ANSI Class 300 flanges.

7. For saturated steam applications, the flow meter shall calculate mass flow corrected for density with real time calculations based on temperature measured by an integral 1000 ohm platinum RTD (similar to Onicon model F-2200).

8. For superheated steam applications, the flow meter shall calculate mass flow corrected for density with real time calculations based on temperature measured by an integral 1000 ohm platinum RTD and pressure measured by an integral pressure sensor (similar to Onicon model F-2300).

9. Each flow meter shall be individually flow calibrated at five points from 0-250 ft/s against the manufacturer's flow standards. The manufacturer shall provide a certificate of calibration for each meter.

10. Mass flow accuracy shall be within ± 1.5% of actual reading over the range of the meter, including all errors associated with velocity measurement, temperature and/or pressure measurement, and density compensation.

11. The flow meter shall be programmed by the manufacturer for each specific application and shall be ready to use upon delivery.

12. The meter shall display steam mass flow rate and mass flow total with an integral LCD display and support field programming of all parameters. All flow totalization and programming data shall be saved to EEPROM to prevent data loss in the event of power failure.

13. The meter shall have integral diagnostics to promote on-site verification of installation conditions and the proper operation of the meter.

14. The meter shall provide a loop-powered 4-20 mA output signal for steam mass flow rate and a pulse output for steam mass flow totalization for connection to the BAS. All outputs shall be linear with mass flow rate.

2.6 ULTRASONIC FLOW METERS

A. Chilled Water Meter

1. Acceptable manufacturers subject to compliance with the specifications.

a. Controlotron

2. Provide Controlotron 990E Uniflow Ultrasonic meter with chilled water supply and return temperature sensors with BTU metering head and remote readout. Interface with the CBAS system. Unit shall meter the main campus chilled water service to the Building.

PART 3 – EXECUTION

3.1 FLOW ELEMENTS INSTALLATION

A. Shall be installed in accordance with manufacturer recommendations, Contract Drawings and reviewed submittals.

B. Shall be provided with a chained cap.

C. Each location shall be labeled.

D. Gauges and thermometers subject to vibration or physical damage shall be adequately supported and protected.

3.2 METERS

A. Install in accordance with manufacturer's instructions.

END OF SECTION 230519.10

SECTION 23 0519.20 – HYDRONIC PIPING SPECIALTIES

PART 1 - GENERAL

1.1 RELATED DOCUMENTS

A. Drawings and general provisions of the Contract, including General and Supplementary Conditions, Section 230500 and other Division 1 Specification Sections, apply to this Section.

B. LEED Building General Requirements: The Owner requires the Contractor to implement practices and procedures to meet the project's environmental performance goals, which include achieving LEED Certification. Specific project goals that may impact this area of work include: Use of recycled-content materials; use of locally-manufactured materials; use of low-emitting materials; construction waste recycling; and the implementation of a construction indoor air quality management plan. The Contractor shall ensure that the requirements related to these goals, as defined in the sections below, are implemented to the fullest extent. Substitutions, or other changes to the work proposed by the Contractor or their Subcontractors, shall not be allowed if such changes compromise the stated LEED Building Performance Criteria.

1. Comply with LEED (Leadership in Energy and Environmental Design) Green Building Rating System BD+C, Version 3.

1.2 WORK INCLUDED

A. Secure all permits and local/state approvals for the installation of all components included under this Section.

1.3 RELATED SECTIONS

A. Examine all drawings and criteria sheets and all other Sections of the Specifications for requirements which affect work under this Section whether or not such work is specifically mentioned in this Section.

B. Section 017419 "Construction Waste Management and Disposal" for requirements related to construction waste management and disposal at the project site.

C. Section 018113 "VOC Limits for Adhesives, Sealants, Paints and Coatings" for restrictions of VOC in adhesives, sealants, paints and coatings.

D. Section 018119 "Construction Indoor Air Quality (IAQ) Management" for requirements during construction for indoor-air-quality management.

1.4 REFERENCES

A. Applicable provisions of the following Codes and Trade Standard Publications shall apply to the work of this Section, and are hereby incorporated into, and made a part of the Contract Documents.

B. ASME: American Society of Mechanical Engineers

C. ANSI: American National Standards Institute

1. B16.1: Cast Iron Pipe Flanges and Flanged Fittings
2. B16.3: Malleable Iron Threaded Fittings
3. B16.4: Cast Iron Threaded Fittings
4. B16.5: Pipe Flanges and Flanged Fittings
5. B16.22: Wrought Copper and Copper Alloy Solder Joint Pressure Fittings
6. B31.1: Power Piping

1.5 SUBMITTALS

A. See Section 230500 and General Conditions for additional requirements.

B. Product Data: Include steam/condensate specialties, pipe fittings and accessories. Provide manufacturers catalogue information.

C. Manufacturer's Installation Instructions: Indicate hanging and support methods, joining procedures.

D. Maintenance Data: Include installation instructions, spare parts lists, exploded assembly views.

1.6 QUALITY ASSURANCE

A. Installer: Company specializing in performing work of the type specified in this section, with documented experience.

1.7 REGULATORY REQUIREMENTS

A. Conform to ASME B31.9 code for installation of steam and condensate piping systems including specialties.

B. Welding Materials and Procedures: Conform to ASME (BPV IX) and applicable state labor regulations.

1.8 DELIVERY, STORAGE AND HANDLING

A. Provide temporary end caps and closures piping and fittings. Maintain in place until installation.

B. Protect piping systems and specialties from entry of foreign materials by temporary covers, completing sections of the work, and isolating parts of completed system.

1.9 ENVIRONMENTAL

A. Do not install equipment when environmental conditions are outside the specific limitations of the referenced codes and manufacturer's recommendations.

PART 2 - PRODUCTS

2.1 GENERAL

A. Provide thermometers and gauges:

1. At each inlet and outlet of each air handling unit coil
2. At each pump
3. At each heat exchanger
4. At each PRV station
5. At each chiller
6. At each cooling towers cell
7. At each flow meter station
8. As shown on the drawings
9. As required

B. Thermometers and pressure gauges shall be provided for the above described equipment regardless of pipe size. If pipe size is such that the installation of wells or taps is not feasible, then oversized pipe to accommodate the above installation requirements.

C. No products containing mercury will be acceptable.

2.2 THERMOMETERS

A. Acceptable manufacturers subject to compliance with the specifications.

1. Weksler
2. Moeller
3. Taylor
4. Dresser
5. WIKA Instrument Corp.
6. Miljoco

B. All thermometers in liquids shall have separable sockets.

C. Thermometers shall be with glass fronts, aluminum or phenol cases, and adjustable as required for ready reading from the floor.

D. All thermometers shall use non-toxic liquid filled magnifying lens front tubes.

E. All thermometers shall have 9" scales and 12" cases.

F. All thermometers shall be accurate to ±1% of scale range.

G. Thermometer ranges shall be selected so that the normal operating range of each will occur in the middle half of the total range and so that under minimum and maximum conditions thermometers will not be harmed.

2.3 THERMOMETER WELL

A. 304 or 316 stainless steel tapered shank.

B. Where installed in insulated systems provide extended neck.

C. 3/4 inch NPT process connection; 1/2 inch NPT instrument connection and nominal 1/4 inch bore.

2.4 GAUGES

A. Acceptable manufacturers subject to compliance with the specifications.

1. Weksler
2. Dresser
3. Fisher & Porter
4. WIKA Instrument Corp.
5. Miljoco

B. Except for the automatic temperature control system, gauges shall be constructed with bourdon type bronze tubes, stainless steel movements, white dials, black micrometer adjustable points, aluminum or phenol surface mounted beaded cases, matching aluminum or phenol screwed rings and bottom connections. All gauges shall have 4 1/2" diameter cases. All gauges shall be accurate to 1% of scale range.

C. Gauge ranges shall be selected such that the normal operating range of each will occur in the center of the total range and under minimum and maximum conditions no gauge will be harmed.

D. All gauges shall be provided with needle valves

1. Barstock needle Valves shall be equal to:

a. Crane
b. Edward
c. Dresser.
d. WIKA Instrument Corp.

E. Gauges installed in pump discharge piping shall be provided with snubbers and steam with siphons equal to Ray.

2.5 PRESSURE DIFFERENTIAL GAUGE

A. Acceptable manufacturers subject to compliance with the specifications.

1. Similar to ITT Barton Instruments Company.

2.6 RELIEF VALVES, PRESSURE REDUCING VALVES

A. Acceptable manufacturers subject to compliance with the specifications.

1. Bell and Gossett, ITT.
2. Amtrol.
3. Watts Regulator Company.
4. Kunkle Valve Company.

2.7 PRESSURE/TEMPERATURE TAPS

A. Acceptable manufacturers subject to compliance with the specifications.

1. Sisco P/T Plugs.
2. Peterson Equipment Company.
3. Fairfax Company
4. WIKA Instrument Corp.

B. All pressure/temperature taps shall have a solid brass 1/4" or 1/2" NPT fitting (test plug).

C. Test plug shall be capable of receiving either a pressure or temperature probe 1/8" o.d. Valve core shall be neoprene for temperatures 60°F to 200°F, nordel to 350°F, and shall be rated zero leakage from vacuum to 1000 psig.

D. The Contractor shall also furnish the following:

1. Pressure gauge adapters with 1/16" and 1/8" o.d. probe
2. 5" stem pocket testing thermometers for 25° to 125°F (chilled water)
3. 5" stem pocket testing thermometers 0° to 220°F (hot water)
4. 5" stem pocket testing thermometers 50° to 500°F (temperatures above 220°F).

5. A Master test kit which shall contain

a. A 2 1/2" test gauge of suitable range
b. A gauge adapter with 1/16" and 1/8" o.d. probe
c. A 5" stem pocket testing thermometers 0° to 220°F
d. A 5" stem pocket testing thermometers 50° to 550°F).

2.8 PRESSURE DIFFERENTIAL GAUGE

A. Dual rupture proof liquid filled bellows having integral temperature compensation.

B. Designed to withstand repeated overranges equal to the working pressure of the instrument housing without causing a calibration change. Gauge and components shall be suitable for a working pressure of 200 psig and a water temperature of 200 degrees F.

C. Motion transmission is by a hermetically sealed torque tube, no lubrication required.

D. Dial shall be a minimum of 6 inches round. Indicator case shall be fabricated from die-cast aluminum and finished in black epoxy paint. The indicating scale shall be graduated uniformly for measurement of differential pressure.

E. Scale shall be calibrated in 1 psig increments. Full scale range shall be from 0 to 25 psig.

F. The indicating mechanism shall consist of a precision-made, jeweled, rotary movement. It multiplies rotation of the torque tube through a gear and pinion to the indicating pointer. The indicating pointer shall traverse a 270 degree arc. The movement shall have micrometer screws for convenient zero and range adjustments. Zero and range adjustments shall be made without removing the scale plate or the pointer. The rotary movement and the pointer should be fully protected from overrange in either direction.

G. Accuracy shall be within 2 percent of the full scale differential pressure range when operating at or below 200 psig.

H. A three-valve manifold shall be used. The manifold shall provide two block valves and a bypass valve for installation and zero check. Valves shall also be provided on the instrument housings for bleeding or venting.

I. Two 10 foot neoprene hoses shall be included with the differential pressure gauge. Hoses shall be equipped with 1/4 inch NPT male fittings for connecting to the manifold. The other end of the hoses shall have an adaptor to mate with the pressure temperature tap.

J. The differential pressure gauge, valve manifold, bleed valves, hoses and instruction booklet shall all be placed in a plastic carrying case. The gauge indicator and manifold shall be permanently mounted on the base of the case. The case cover shall be equipped with a handle fastened to the base with toggle type latches.

K. Differential pressure gauge shall be similar to ITT Barton Model 247A.

2.9 RELIEF VALVES

A. Relief valve body shall be of iron or bronze construction.

B. ASME rated direct spring loaded type, level operated, non-adjustable factory set discharge pressure.

C. For expansion tank application, select system relief valve pressure setting and equipment relief valve pressure setting as indicated on mechanical contract drawings.

D. Pressure relief valve shall be suitable for maximum system operating pressure and temperature.

2.10 PRESSURE REDUCING VALVE

A. Pressure reducing valve shall be bronze or iron body construction, with renewable stainless steel seat, and high temperature resisting diaphragm, direct acting, spring loaded, suitable for inlet pressure of 150 psi.

B. Built in stops shall protect diaphragm against sudden shock waves that could stretch or tear the diaphragm.

C. Provide a cartridge seat assembly with a seat washer and monel strainer for quick cleaning and replacement.

2.11 AIR VENTING AND DRAINAGE

A. Manual air vent.

1. Provide hose end ball valves, (minimum size 1/2" with chains and caps), or larger where shown or required by the service.

2. See HVAC Valve specification

B. Automatic air vent.

1. Acceptable manufactures subject to compliance with the specifications:

a. Armstrong
b. Bell and Gossett

2. Float type with isolating valve, cast iron body, stainless steel float, stainless steel valve, and valve seat. Suitable for 300 psig operating pressure and 300 degrees F system temperature.

3. Vents shall be designed to eliminate air from the system automatically without permitting the passage of water.

4. Minimum size shall be ¾” or as indicated or required.

5. Similar to Armstrong Model 1-AV.

C. Drains

1. Provide ball valves with caped hose connections, (minimum size 3/4"), or larger where shown or required by the service.

2. See HVAC Valve specification

PART 3 – EXECUTION

3.1 THERMOMETER INSTALLATION

A. Shall be installed in accordance with manufacturer recommendations, Contract Drawings and reviewed submittals.

B. Shall be turned as such to be readily visible from the operating floor.

C. Thermometers subject to vibration or physical damage shall be adequately supported and protected.

3.2 THERMOMETER WELL

A. Shall be installed in accordance with manufacturer recommendations, Contract Drawings and reviewed submittals.

3.3 PRESSURE RELIEF VALVE

A. Shall be installed in accordance with manufacturer recommendations, Contract Drawings and reviewed submittals.

3.4 PRESSURE REDUCING VALVE

A. Shall be installed in accordance with manufacturer recommendations, Contract Drawings and reviewed submittals.

3.5 PRESSURE DIFFERENTIAL GAUGE

A. Shall be installed in accordance with manufacturer recommendations, Contract Drawings and reviewed submittals.

B. Provide differential pressure gauge package to user after system balancing.

3.6 GAUGE INSTALLATION

A. Shall be installed in accordance with manufacturer recommendations, Contract Drawings and reviewed submittals.

B. Shall be turned as such to be readily visible from the operating floor.

C. If the gauge is more than 8'-0" above the floor or cannot otherwise be made readily readable, extended pipe connections gauge to a readable location.

D. Gauges subject to vibration or physical damage shall be adequately supported and protected.

3.7 PRESSURE/TEMPERATURE TAPS INSTALLATION

A. Shall be installed in accordance with manufacturer recommendations, Contract Drawings and reviewed submittals.

B. Provide pressure taps wells for all in-duct or in-box water coils.

3.8 AIR VENTING INSTALLATION

A. Manual air vent

1. Provide all high points in closed water piping systems shall be relieved of air through accessible manual vents on the high points of the pipe lines and at the equipment. Vent valves on piping and equipment shall be 1/2" ball valves with

chains and caps and with discharge pipes to convenient points for catching discharge.

2. Provide access doors to all vents.

B. Automatic air vent

1. Provide as indicates and at expansion tank connection to main pipe.
2. Pipe to spill over floor drain or sink.

3.9 DRAINAGE

A. Grade all piping for drainage through equipment or through accessible drain valves so that system can be conveniently freed of water by gravity flow.

B. Provide drains from air handling units and from air intake and other intake and exhaust plenums with traps. Traps shall be a minimum of 4", unless the static pressure requires additional trap depth. Discharge drains to nearest floor drain.

END OF SECTION 230519.20

SECTION 23 0523 –HVAC VALVES AND STRAINERS

PART 1 – GENERAL

1.1 RELATED DOCUMENTS

A. Drawings and general provisions of the Contract, including General and Supplementary Conditions, Section 230500 and other Divisions Specification Sections, apply to this Section.

B. LEED Building General Requirements: The Owner requires the Contractor to implement practices and procedures to meet the project's environmental performance goals, which include achieving LEED Certification. Specific project goals that may impact this area of work include: Use of recycled-content materials; use of locally-manufactured materials; use of low-emitting materials; construction waste recycling; and the implementation of a construction indoor air quality management plan. The Contractor shall ensure that the requirements related to these goals, as defined in the sections below, are implemented to the fullest extent. Substitutions, or other changes to the work proposed by the Contractor or their Subcontractors, shall not be allowed if such changes compromise the stated LEED Building Performance Criteria.

1. Comply with LEED (Leadership in Energy and Environmental Design) Green Building Rating System BD+C, Version 3.

1.2 WORK INCLUDED

A. Furnish and install all shut-off, gate, globe, check, ball, strainers, balancing and other type valves as shown and as required to make a complete and operational system.

B. Provide isolation valves at all drains, piping mains and branches at all piping systems, equipment, risers and before and after all control valves.

C. Secure all permits and local/state approval for the installation of all components included under this Section.

1.3 RELATED SECTIONS

A. Examine all drawings and criteria sheets and all other Sections of the Specifications for requirements which affect work under this Section whether or not such work is specifically mentioned in this Section.

B. Section 017419 "Construction Waste Management and Disposal" for requirements related to construction waste management and disposal at the project site.

C. Section 018113 "VOC Limits for Adhesives, Sealants, Paints and Coatings" for restrictions of VOC in adhesives, sealants, paints and coatings.

D. Section 018119 “Construction Indoor Air Quality (IAQ) Management” for requirements during construction for indoor-air-quality management.

1.4 REFERENCES

A. Applicable provisions of the following Codes and Trade Standard Publications shall apply to the work of this Section, and are hereby incorporated into, and made a part of the Contract Documents.

B. All valves to be designed, manufactured and tested to the following standards and/or reference societies. Material standards shall be as specified or detailed hereinafter and as follows:

1. MSS SP-67 – Butterfly Valves (Lug and Wafer); Manufacturers Standardization Society of the Valve and Fittings Industry.

2. MSS SP-68 – Butterfly Valves: High Performance (High Pressure Butterfly Valves with Offset Disc design); Manufacturers Standardization Society of the Valve and Fittings Industry.

3. MSS SP-69 – Pipe Hangers and Supports – Selection and Application; Manufacturers Standardization Society of the Valve and Fittings Industry.

4. MSS SP –70 - Iron Gate Valves, Flanged and Threaded Ends; Manufacturers Standardization Society of the Valve and Fittings Industry.

5. MSS SP-71 - Cast Iron Swing Check Valves, Flanged and Threaded Ends; Manufacturers Standardization Society of the Valve and Fittings Industry.

6. MSS SP-72 Ball Valves with Flanged or Butt Weld Ends; Manufacturers Standardization Society of the Valve and Fittings Industry.

7. MSS SP-78 - Cast Iron Plug Valves, Flanged and Threaded Ends; Manufacturers Standardization Society of the Valve and Fittings Industry.

8. MSS SP-80 – Bronze Gate, Globe, Angle and Check Valves; Manufacturers Standardization Society of the Valve and Fittings Industry.

9. MSS SP-85 – Iron Globe & Angles Valves, Flanged and Threaded Ends; Manufacturers Standardization Society of the Valve and Fittings Industry.

10. MSS SP-89 – Pipe Hangers and Supports – Fabrication and Installation Practices; Manufacturers Standardization Society of the Valve and Fittings Industry.

11. MSS SP-110- Ball Valves Threaded, Socket-Weld, Solder Joint, Grooved and Flared Ends; Manufacturers Standardization Society of the Valve and Fittings Industry.

12. MSS SP-25-Standard Marking system for Valves, Fittings, Flanges and Unions; Manufacturers Standardization Society of the Valve and Fittings Industry.

13. MSS SP-45 Bypasses and Drain connections; Manufacturers Standardization Society of the Valve and Fittings Industry.

14. MSS SP-45 Table II Series A, to be utilized for Steam Service Valves requiring By-Passes with built up bypasses to be performed only at plant of manufacture by Valve manufacturer; By-Pass valves shall be same manufacturer as in line valve; Manufacturers Standardization Society of the Valve and Fittings Industry.

15. Threads, Flanges, Fittings shall conform to ANSI Standards: B1.1; B1.20.1; B2.4; B16.1; B16.10; B16.34; B16.5; B16.34A.

16. NFPA54 – National Fuel Gas Code; National Fire Protection Association.

17. NFPA 58 – Standard for the Storage and Handling of Liquefied Petroleum Gases; National Fire Protection Association.

18. NFPA 99 and CGA G-4-1; Medical Gas Services cleaning procedures and standards for Valves.

19. UL 1479 – Standard for Fire Tests of Through-Penetration Firestops; Underwriters Laboratories Inc.

1.5 SUBMITTALS

A. See Section 230500 and General Conditions for additional requirements.

B. Product Data: Include data on valve materials, pressure class, construction, dimensions and ratings. Provide manufacturers catalogue information. All valves of one type shall be by same manufacturer.

C. Grooved joint couplings and fittings shall be shown on drawings and product submittals and shall be specifically identified with the applicable designation.

D. Manufacturer's Installation Instructions: Indicate hanging and support methods, joining procedures.

E. Project Record Documents: Record actual locations of all valves and valve tag numbers.

F. Maintenance Data: Include spare parts list and exploded valve assembly views.

1.6 QUALITY ASSURANCE

A. Manufacturer: Company specializing in manufacturing valve and strainer products specified in this section, with documented experience.

B. Installer: Company specializing in performing work of the type specified in this section, with documented experience.

C. All grooved joint couplings, fittings and specialties shall be the products of a single manufacturer. Grooving tools shall be of the same manufacturer as the grooved components.

D. All valves and strainers shall contain manufacturer's name and pressure class marked on the valve body.

E. In order to prevent dezincification, all bronze body gate, globe, angle, check and ball valves shall contain body, end pieces, and stems with no more than 15% zinc content. Manufacturers other than those specified by part number shall provide material list containing ASTM number containing percentage of zinc content for all valve materials and wetted part components.

1.7 REGULATORY REQUIREMENTS

A. Perform Work in accordance with all State and Local codes.

B. Conform to all State and Local code for installation of boiler safety valves and backflow prevention devices.

C. Provide certificate of compliance from the authority having jurisdiction indicating approval of installation of all boilers, gas piping, vents and backflow prevention devices.

1.8 DELIVERY, STORAGE AND HANDLING

A. Accept valves on site in shipping containers with labeling in place. Inspect for damage.

B. Provide temporary protective coating on cast iron and steel valves.

C. Weld end preparations shall be coated with 2 mil minimum thickness of "Deoxaluminate", "Bloxide" or equal to preserve the surface during storage.

PART 2 – PRODUCTS

2.1 GENERAL

A. Manufacturer's figure numbers are listed; based on the following catalog data and catalog year: (Please also note that if a valve changes in a later catalog the specified figure number may not be acceptable. The submitted valve shall be compared to the figure number based in the specified catalog.)

1. NIBCO INC:

a. Gate, Globe, Angle and Check Valves: (C-BIV-0207)

b. Ball Valves: (C-BV-0607)
c. Butterfly Valves: (C-BFV-1007).

2. Vogt: Catalog VVACT0000-01, 2004
3. Neles-Jamesbury: 2007
4. Apollo: 2006 Combraco Ind. Inc.
5. Jenkins: 2007
6. Bray: 2003 Bray international
7. Victaulic: 2007 Victaulic company
8. Crane: 2007
9. Nordstrom: Flowserve 2007
10. Edwards: 2003
11. Mueller Steam Specialty 2007
12. William E. Williams: 2007

B. The following is a listing of representative figure numbers desired by service, valve design, style and materials of construction indicative of the product quality required. Substitutions to be accompanied by manufacturer catalog cuts, submittal drawings and material certifications containing properties of all valve materials. Valves from other manufacturers listed in the list of acceptable manufacturers will be accepted provided they meet the specifications, materials of construction, and provide manufacturer catalog cut, certificate of compliance with specifications. If the specified manufactures figure number changes or the design of the valve no longer meets the specified figure number based on the year listed above it is not an acceptable valve.

C. Provide all shutoff, gate, globe, check, ball, strainers, balancing and other types of valves as shown on the drawings and required for proper operation, maintenance, isolation and safety of all piping systems.

D. Provide isolation valves at all drains and piping mains and branches for all water, steam and condensate piping, at all equipment connections and before and after automatic control valves.

E. Provide 1" diameter integral bypass with globe valve at all globe and gate valves 10” and larger; and ¾” diameter integral bypass with globe valve at all globe and gate valves 6” and 8”; for high pressure steam, medium pressure steam and condensate feedwater. All bypasses shall conform to MSS-SP-45 Table II, Series A and be performed at plant of manufacture. If high performance butterfly valves are used 1" bypass with globe valve shall be field-piped for valves 6” or larger.

F. All gate and globe valves 2 1/2" and above shall have a bolted gland follower.

G. The pressure-temperature rating of valves shall not be less than 120% of the design criteria applicable to all components of the system.

H. All 2 ½” and larger gate and globe valves shall be OS&Y type unless specifically noted otherwise.

I. Face-to-face and end-to-end dimensions of flanged iron body valve shall conform to ANSI B16.10. Design workmanship, materials and testing shall conform to MSS-SP-70 (gates), MSS-SP-71 (swing checks) and MSS-SP-85 (globe and angle).

J. Face-to-face and end-to-end dimensions of flanged steel body valves shall conform to ANSI B16.34.

K. End-to-end dimensions of grooved ductile iron body valves shall conform to the latest published dimensions.

L. All steel valves shall be tested in accordance with ANSI B16.34 standards at 1.5 times design pressure (hydrostatic test). Provide a certified test reports.

M. All valves and/or strainers of the same type shall be of the same manufacturer. Before purchasing any valve, the Contractor shall submit for approval the name of the manufacturer, the figure number which he proposes to furnish and engineering data on each figure number. For acceptable manufacturers, see schedules herein.

N. Valves/Strainers in grooved piping systems may be grooved or installed between grooved flange adapters. All valves used for isolation of equipment shall be threaded, flanged.

O. All valves used for balancing purposes, shall have memory stops; lever lock handle operators that may be locked via locking hole designed into the handle and lever; or gear operated with position indicators.

P. All Butterfly valves shall have stainless steel discs and bodies shall be constructed of Ductile Iron, Stainless Steel or Carbon Steel.

Q. All Butterfly valves shall, at minimum, be suitable for bi-directional dead end service at full pressure rating of the valve with no downstream flanges required.

R. Provide handwheels for all manually operated gate and globe valves and for all valves equipped with gear operators. Handwheels shall accept bolt-on chain operators.

S. Provide chain operators for all valves located 7'-0" above floor or higher.

T. Size valve handwheels for not more than 80 lbs. pull on one side of the handwheel to effect tight closure. Where the manufacturer's standard handwheel size is not large enough to accomplish this, provide a gear operator.

U. All handwheels on bronze body gate, globe and angle valves shall be constructed of malleable iron ASTM A 47.

V. Weld end preparations shall be coated with 2 mil minimum thickness of "Deoxaluminate", "Bloxide" or equal to preserve the surface during storage.

W. Valve bonnets and gear operators shall be designed to withstand all forces which may be applied to the handwheels, including those from chain operators.

X. Valves and strainers shall be rated in accordance with or greater then the "Spec. Class No." Specified for that system.

2.2 ACCEPTABLE MANUFACTURERS CONTINGENT ON COMPLIANCE WITH THE SPECIFICATIONS. Note that unless a manufacturer is listed here the manufacturer is not acceptable even if the manufacturer is the specified manufacturer with the figure number for comparison called out else where in the specification:

A. Gate, Globe, Angle and Drain

1. Bronze, Cast Iron, and Ductile Iron Valves

a. NIBCO INC.
b. Crane
c. Jenkins
d. Stockham
e. Milwaukee
f. Vogt

2. Cast Steel and Forged Steel Valves

a. Pacific
b. Powell
c. Vogt
d. Milwaukee
e. Kitz
f. Crane
g. Velan
h. Flowserve (Edwards)

3. Butterfly Valves

a. High Performance

1) Jamesbury (Metso automation)
2) Dezurik
3) Bray

b. Soft Seated

1) Bray
2) NIBCO INC.
3) Jamesbury
4) Victaulic… (Masterseal 300 or AGS Vic-300 only)

4. Lubricated Plug Valves

a. Flowserve (Nordstrom)
b. Walworth

c. Milliken
d. Resun

5. Flow Control Balancing Valves

a. Tour & Anderson / TA Hydronics
b. Armstrong
c. Macon Balancing

6. Constant Flow Valve

a. Griswold
b. Hays
c. Auto-Flow / Flow Design, Inc.

7. Check Valves

a. Swing

1) Walworth
2) William E. Williams
3) Vogt
4) Powell
5) NIBCO INC.
6) Flowserve (Edwards)
7) Victaulic (for grooved systems only)

b. Silent

1) NIBCO INC.
2) Mueller Steam Specialty
3) Williams Hager
4) Victaulic

8. Vacuum Breakers

a. Hoffman specialties
b. Johnson
c. Bell & Gossett

9. Ball Valves

a. Apollo
b. NIBCO INC.

10. Strainers

a. Y Type

1) Elliot
2) Armstrong
3) Mueller Steam Specialty
4) Sarco
5) Victaulic

b. Basket

1) Mueller Steam Specialty

c. Duplex

1) Water

a) Mueller Steam Specialty
b) Zurn
c) Elliot
d) Kraissl

2) Oil

a) Preferred utilities MFG Corp.
b) Elliot

2.3 VALVE CHART

Service	Minimum Class and Material			Joints	
	2" and Less	**2½" to 12"**	**14" & Up**	**2" and Less**	**2½" & Up**
Chilled water supply and return	MSS Class 150 Bronze	MSS Class 150 Ductile iron or steel	ANSI Class 150 Cast Steel	Threaded	Flanged or Grooved*
Secondary chilled water system	MSS Class 150 Bronze	MSS Class 150 Ductile iron or steel	ANSI Class 150 Cast Steel	Threaded	Flanged or Grooved*
Condenser water supply and return	MSS Class 150 Bronze	MSS Class 150 Ductile iron or steel	ANSI Class 150 Cast Steel	Threaded	Flanged or Grooved*
Hot water supply and return	MSS Class 150 Bronze	MSS Class 150 Ductile iron or steel	ANSI Class 150 Cast Steel	Threaded	Flanged or Grooved*
Secondary hot water system	MSS Class 150 Bronze	MSS Class 150 Ductile iron or steel	ANSI Class 150 Cast Steel	Threaded	Flanged or Grooved*
Low pressure steam (0 to 15 psig)	MSS Class 150 Bronze	MSS Class 150 Ductile iron or steel	ANSI Class 150 Cast Steel	Threaded	Flanged

Service	Minimum Class and Material			Joints	
	2" and Less	2½" to 12"	14" & Up	2" and Less	2½" & Up
Medium pressure steam (16 psig to 99 psig)	MSS Class 150 Bronze	MSS Class 150 Ductile iron or steel	ANSI Class 150 Cast Steel	Threaded	Flanged
High pressure steam (225 psi max.) (100 psig to 225 psig)	ANSI Class 300 Cast Steel	ANSI Class 300 Cast Steel	ANSI Class 300 Cast Steel	Threaded	Flanged
High pressure condensate return	MSS Class 250 Cast Iron	ANSI Class 300 Cast Steel	ANSI Class 300 Cast Steel	Threaded	Flanged
Hot well steam condensate and pump discharge to 2½" and up	MSS Class 300 Bronze	MSS Class 250 Cast Iron	ANSI Class 300 Cast Steel		Flanged
Hot well steam condensate and pump discharge to 2"	MSS Class 300 Bronze	MSS Class 250 Cast Iron	ANSI Class 200 Cast Steel	Threaded	
Low pressure condensate return	MSS Class 150 Bronze	MSS Class 150 Ductile iron or steel	ANSI Class 150 Cast Steel	Threaded	Flanged
Medium pressure condensate return	MSS Class 150 Bronze	MSS Class 150 Ductile iron or steel	ANSI Class 150 Cast Steel	Threaded	Flanged
Pumped condensate	MSS Class 150 Bronze	MSS Class 150 Ductile iron or steel	ANSI Class 150 Cast Steel	Threaded	Flanged
Makeup and fill	MSS Class 150 Bronze	MSS Class 150 Ductile iron or steel	ANSI Class 150 Cast Steel	Threaded	Flanged or Grooved*
Miscellaneous drains 2½" and up		Match system			Flanged or Grooved*
Miscellaneous drains to 2"	Match system			Threaded	
Refrigerant system	MSS Class 150 Bronze			Silver Brazed	Flanged
Fuel oil	MSS Class 300 Bronze UL Listed	ANSI Class 150 Cast Steel UL Listed	ANSI Class 150 Cast Steel UL Listed	Threaded	Butt Weld
Fuel oil supply and return (boiler room)	ANSI Class 150 Cast Steel UL Listed	ANSI Class 150 Cast Steel UL Listed	ANSI Class 150 Cast Steel UL Listed	Socket Weld	Butt Weld

Service	Minimum Class and Material			Joints	
	2" and Less	**2½" to 12"**	**14" & Up**	**2" and Less**	**2½" & Up**
Fuel oil supply and return below grade	ANSI Class 150 Cast Steel UL Listed	ANSI Class 150 Cast Steel UL Listed	ANSI Class 150 Cast Steel UL Listed	Socket Weld	Butt Weld
Other piping	MSS Class 150 Bronze	MSS Class 150 Ductile iron or steel	ANSI Class 150 Cast Steel	Threaded	Flanged or Grooved*

* Grooved piping systems of standard wall shall be **roll** grooved or cut grooved according to Victaulic groove specification standards. On piping heavier than standard wall, cut grooving required per Victaulic **cut** groove specification standards. All grooved valves shall be a minimum class of 300.

2.4 GATE VALVES

A. Up to 2"

1. Valves shall be:

   a. Threaded
   b. Rising stem
   c. Union bonnet
   d. Solid wedge and manufactured in accordance with MSS-SP 80.
   e. Body, bonnet and wedge are to be of cast bronze ASTM B-62 (Class 150) or ASTM B-61 (Class 200 & 300).
   f. Stems shall be of dezincification-resistant silicon bronze ASTM B-371 or low-zinc alloy ASTM B-99.
   g. Non-asbestos packing

   h. Malleable or ductile iron handwheel

      1) Class 150: Similar to NIBCO Fig. T-134
      2) Class 200: Similar to NIBCO Fig. T-154-A
      3) Class 300: Similar to NIBCO Fig. T-174-A

2. Bronze Body and bonnet, socket weld ends, solid wedge, inside screw, non-rising steam, screw-in bonnet, for copper pipe

   a. Class 150: Similar to Kitz Fig. C150E (Code64)

3. Forged steel, bolted bonnet, solid wedge, OS&Y, rising stem

   a. Class 800

      1) Threaded: Similar to Vogt Fig. 11103
      2) Socket Weld: Similar to Vogt Fig.SW-11103

B. 2 1/2" & Up

1. For chilled water, condenser water, hot water services

   a. Manufactured in accordance with MSS-SP 70
   b. Raised face flanged ends
   c. Bolted bonnet
   d. OS&Y
   e. Rising stem
   f. Solid wedge
   g. Bronze trim
   h. Body and bonnets conforming to ASTM A395 Ductile Iron.

   i. Packing and gaskets to be non-asbestos.

      1) Class 150: Similar to NIBCO Fig. F-637-31

2. For steam, high temperature hot water, and water treatment services

   a. Same as 1 above except:

      1) Stainless Steel trim

      2) Body and bonnet conforming to ASTM A395 Ductile Iron Or cast steel

         a) Class 150: Flanged Ends: Similar to NIBCO Fig F-637-33

         b) Class 300: Cast Steel

            (1) Weld Ends: Similar to Crane Fig. 33½
            (2) Flange Ends: Similar to Crane Fig. 33.

         c) Class 600: Cast Steel

            (1) Weld Ends: Similar to Crane Fig.76½.
            (2) Flange Ends: Similar to Crane Fig. 76

2.5 GLOBE AND ANGLE VALVES

A. Up to 2"

1. Class 150: Valves shall be ASTM B-62

   a. Bronze body and trim
   b. Rising stem

c. Union bonnet

d. Integral seat with renewable seat and Teflon disc with screwed ends, conforming to MSS SP-80.

1) Class 150

a) Angle: Similar to NIBCO Fig. T-335-Y
b) Globe: Similar to NIBCO Fig. T-235-Y

2. Class 200 and Class 300:

a. Valves shall be ASTM B-61
b. Bronze body
c. Regrinding/renewable stainless steel plug disc and seat ring
d. Threaded ends

e. Union bonnet.

1) Class 200

a) Angle: Similar to NIBCO T-376-AP
b) Globe: Similar to NIBCO Fig. T-256-AP

2) Class 300

a) Angle: Similar to NIBCO Fig. T-376-AP
b) Globe: Similar to NIBCO Fig. T-276-AP

3. Forged steel, bolted bonnet, plug type disc of 500 Brinnel stainless steel, with stellited seat, OS&Y

a. Minimum Class 800:

1) Threaded: Similar to Vogt Fig. 801
2) Socket weld: Similar to Vogt Fig. SW801

B. 2 1/2" & Up

1. For chilled water, condenser water, hot water services.

a. Raised face flanged ends
b. Bolted bonnet
c. OS&Y, rising stem
d. B-584 seat and seat ring, with body and bonnet conforming to ASTM A395 Ductile Iron.

e. Packing and gaskets to be non-asbestos

1) Class 150 in accordance with MSS-SP 85

a) Angle: Similar to NIBCO Fig. F-838-31
b) Globe: Similar to NIBCO Fig. F-738-31

2. For steam, high temperature hot water and water treatment services:

a. Cast steel
b. Stainless steel trim and plug
c. OS&Y, rising steam

d. Flanged or butt weld ends.

1) Class 150

a) Welded Ends: Similar to Crane Fig. 143½
b) Flanged Ends: Similar to Crane Fig. 143

2) Class 300

a) Welded Ends: Similar to Crane Fig. 151½
b) Flanged Ends: Similar to Crane Fig. 151

3) Class 600

a) Welded Ends: Similar to Crane Fig. 171½
b) Flanged Ends: Similar to Crane Fig. 171

2.6 BALL VALVES

A. Up to 2 1/2" (for water below 200°F and below)

1. Full port
2. All stainless steel ball and stem
3. Extended stem for insulation
4. Two piece bronze body
5. 600 PSIG WOG
6. 250 PSIG steam trim

7. Threaded

a. Similar to Apollo Fig. 77-140-64

8. Soldered

a. Similar to Apollo Fig. 77-240-64

B. Up to 2-1/2" (for steam and water 200ºF and above)

1. Full port

2. All stainless steel ball and stem
3. Two piece steel body
4. 600 PSIG WOG 250 PSIG steam
5. Extended stem for insulation
6. 250 PSIG steam trim

7. Threaded

    a. Similar to Apollo Fig. Apollo 92-140-64

8. Socket Welded:

    a. Three piece steel body
    b. Similar to Apollo Fig. Apollo 83R-240-64

C. Fuel Oil (up to 2-1/2")

1. Bronze ASTM-B584 bodies and end pieces, CSA certified to ANSI B16.33 and CGA 3.16
2. 300 PSIG WOG

3. UL Listed; CUL Listed; UL842 Listed

    a. YRPV
    b. YQNZ
    c. YRBX

4. Similar to Apollo 90-100

D. 3” and larger

1. Flanged body

2. Stainless Steel body, Ball and Stem.

    a. 316 Stainless Steel trim.

3. Fire Safe, conforming to ANSI 16.34, 16.35, MSS-SP-72, American Petroleum Institute 607 4th Edition and MSS SP 25.

4. Class 300

    a. 720 PSI CWP
    b. Gear operated
    c. Similar to Apollo Fig No. 87A-900-MG

E. Drain Valves

1. Ball valves or gate valve.

a. All drains shall be provided with a brass hose connection with a pressure rated brass cap with a chain.

1) 3/4 hose thread on valve
2) 1” and 2”use brass pipe thread by straight thread hose connection adapter.
3) Each shall be provided with brass pressure rated cap and chain.

2.7 SWING CHECK VALVES

A. Access to Elements

1. Up to 2" except as noted: Screw-in caps
2. 2" to 2-1/2": Bolted or coupled covers

B. Water (Except at Pump Discharge and as Noted)

1. Up to 2":

a. Bronze body check valves shall be, swing type, Y-Pattern with renewable seat and disc, regrinding type with Bronze ASTM B-62 body for Class 150 valves and ASTM B-62 body for Class 200 and Class 300

1) Class 150: Similar to NIBCO Fig. T-433
2) Class 200: Similar to NIBCO Fig. T-453-B
3) Class 300: Similar to NIBCO Fig. T-473

b. Forged steel, screwed ends lift type, bolted cover.

1) Class 800:

a) Threaded: Similar to Vogt Fig. 701
b) Socket welded: Similar to Vogt Fig. SW701

2. 2 1/2" and Up

a. For chilled water, condenser water, hot water services Valves to be Class

1) 150 swing check valves, MSS-SP 71
2) Raised face flanged ends
3) Bolted bonnet
4) Bronze ASTM B-584 disc and seat rings

5) Body and bonnet conforming to ASTM A395 Ductile Iron.

a) Class 150: Similar to NIBCO Fig. F-938-31 (cat. 2007)

6) Iron body, stainless steel disc, grooved.

a) 300 PSIG CWP: Victaulic Series 712

b. For steam, high temperature hot water, and water treatment services

1) Valves to be Class 150 manufactured in accordance with MSS-SP 71
2) Raised face flanged ends
3) Bolted bonnet
4) Stainless Steel disc and seat rings

5) Body and bonnet conforming to ASTM A395 Ductile Iron.

a) Class 150: Similar to NIBCO Fig. F-938-33 (cat. 2007)

6) Body and bonnet Cast steel.

a) Class 150: Similar to William E. Williams Fig# 151F2

c. Class 300, 600 and 900 Same as above except:

1) Valves to be cast steel bodies
2) Stainless steel trim
3) Raised Face Flanged ends

4) Swing type, bolted bonnet.

a) Class 300: Similar to William E. Williams Fig# 301F2
b) Class 600: Similar to William E. Williams Fig# 601F2
c) Class 900: Similar to William E. Williams Fig# 901F2

C. Steam and Condensate Return

1. Up to 2"

a. Bronze body check valves shall be, swing type, Y-Pattern with renewable seat and disc, regrinding type with Bronze ASTM B-62 bodies; Class 200 and Class 300.

1) Class 200: Similar to NIBCO Fig. T-453-B
2) Class 300: Similar to NIBCO Fig. T-473

2. 2 1/2" and Up

a. As specified for water service (low pressure steam only).

1) Class 150: Similar to NIBCO Fig. F-938-31 (cat. 2007)

b. Cast Steel, globe style, Flanged, Stellite seat and disk.

1) ANSI Class 300: Similar to Edwards 394 (cat 2003)

2.8 SILENT CHECK VALVES

A. Spring Loaded, Globe

1. Valves up to 300 psi.

a. Ductile iron body
b. Stainless steel trim

2. Valves class 300 psi. or greater.

a. Cast steel body
b. Stainless steel trim
c. Stainless steel trim for valves.

3. Body Flanged

a. Class 150: Similar to Crane Fig. C15DDMF3
b. Class 300: Similar to Crane Fig. C30STF3
c. Class 600: Similar to Crane Fig. C60STF3

4. Grooved Body: Where approved

a. Conforming to ANSI/AWWA C-606

b. Through 12”.

1) Victaulic Series 716 or 779

c. 14” Through 24”

1) Victaulic Series W715

2.9 VACUUM BREAKERS

A. Adjustable from 1⁄4" - 20" (8-508mm) Hg vacuum

1. Factory set at 2” (51mm) Hg vacuum

B. For use on closed vessels and piping systems to control induced vacuum within safe limits

C. 3⁄4" NPT straight shank

D. Maximum operating temperature 366°F (186°C)

E. Maximum operating pressure 150 psig (10.3 bar)

F. Similar to Hoffman specialties Model 62 (catalog 2007)

2.10 LUBRICATED PLUG VALVES

A. Screwed ends up to 2", flanged ends for 2 1/2" and up.

B. Maximum port opening tapered plug suitable for lubrication under service pressure with plug in any position.

C. Lubricating Guns

1. One (1) for every (10) valves.
2. Extra heavy, lever type, hydraulic hand gun.
3. 15,000 psi gauge and 12" long connection hose.
4. Similar to Rockwell-Nordstrom Model #400-C.

D. Lubricant

1. Similar to Rockwell Sealant #421.
2. One (1) year supply for each valve.

E. Operators

1. Up to 6" (Wrench, Except as Noted)

a. Wrench set for each size valve.

2. 8" & Up (Gear Operated)

a. Permanently installed handwheel.

3. Where noted or required for inaccessible overhead valves:

a. Chain operated handwheel with rustproof chain and chain guide.

F. Motor operated as noted in other Sections of this Specification.

G. Piping systems with maximum temperature under 100 °F

1. Piping less than 100 psi, minimum 200 lbs. WOG Class, cast iron body.

a. Up to 2": Screwed
b. 2 1/2" & Up: Flanged, 125 lbs. ANSI

2. Piping 100 psi TO 250 PSI, minimum 500 lbs. WOG Class, cast iron body.

a. Up to 2": Screwed
b. 2 1/2" & Up: Flanged, 250 lbs. ANSI

3. Piping over 250 PSI use ANSI CLASS carbon steel class 300

H. Piping systems with maximum temperature over 100 °F

1. ANSI CLASS 150, carbon steel body

   a. Up to 2": Screwed
   b. 2 1/2" & Up: Flanged, 150 lbs. ANSI

2. ANSI class 300.carbon steel body.

   a. Up to 2": Screwed
   b. 2 1/2" & Up: Flanged, 300 lbs. ANSI

I. Similar to the following Rockwell-Nordstrom numbers:

1. 200 lbs. WOG Class

   a. Up to 2": Fig. 142 (cat. 2007)
   b. 2 1/2" thru 5": Fig. 143 (cat. 2007)
   c. 6" thru 12": Fig. 149 (cat. 2007)
   d. 14 thru 36 Fig 1169 (cat. 2007) (150 CWP)

2. 500 lbs. WOG Class

   a. Up to 2": Fig. 524 (cat. 2007)
   b. 2 1/2" to 4": Fig. 525 (cat. 2007)
   c. 6" thru 24": Fig. 1589 (cat. 2007) (400 CWP)

3. 150 lbs. ANSI

   a. Up to 2": Fig. 1924 (cat. 2007)
   b. 2 1/2" to 4": Fig. 1925 (cat. 2007)
   c. 6"thru 12” Fig. 2449 (cat. 2007)
   d. 14 thru 30” Fig. 4149 (cat. 2007)

4. 300 lbs. ANSI

   a. Up to 2": Fig. 2024 (cat. 2007)
   b. 2 1/2" to 4": Fig. 2025 (cat. 2007)
   c. 6"thru 24: Fig. 4249 (cat. 2007)

2.11 FLOW CONTROL BALANCING VALVES

A. General

1. Balancing valves shall be installed, as shown on the drawings and as required, to ensure the accurate balancing of all flows in the hydronic heating and cooling systems.

2. The balancing shall meet the specified water flows with a maximum tolerance of ±5%.

3. Valves shall be of the "Y" pattern globe style design and must offer a minimum of (4) full rotations of the handwheel for accurate adjustment and for precise flow control.

4. Valves shall exhibit an accuracy of ±5% within the normal operating range.

5. Valves shall have integral self-sealing metering ports for measuring differential pressure, flow rates and temperature. Ports shall be protected with individual threaded caps.

6. Valves must offer 100% positive, leakproof shutoff against the same fluid pressure as the valve body rating to a nominal value of 300°F (230°F if grooved) at 250 psi.

B. All balancing valves must offer a hidden memory feature to prevent unauthorized adjustment and to ensure a return to the original setting after shutoff.

C. All balancing valves shall comply with international quality standard ISO 9001.

D. Valves sizes 1/2" to 16"

1. This is the only type of valve that can be 1/2”.

2. This valve may be 1/2” with a reducer and increaser to 3/4” pipe as required for balancing.

3. All balancing valves shall be manufactured from pressure diecast dezincification resistant AMETAL copper alloy which does not require dielectric fittings.

4. Valve bodies shall be manufactured from a ductile iron equivalent to ASTM 535B with all wetted, moving parts of dezincification resistant AMETAL copper alloy.

5. Shall have a digital handwheel for positioning accuracy.

   a. Provide a transparent dust/paint cover to prevent destruction of the digits during construction.

6. Valves sizes 1/2" to 2"

   a. Similar to TA (STAD/S)

7. Sizes 2 1/2" through 16"

   a. Shall have a numerical vernier sleeve for position readout.
   b. Similar to TA (STAF/G)

E. Valves larger than 16": use lubricated plug valve with separate flow elements.

2.12 CONSTANT FLOW VALVES

A. General

1. Automatic flow control valves shall automatically control flow rates with Accuracy ±5% over an operating pressure differential range of at least 95% of the control range.

2. Valve internal control mechanism shall consist of:

   a. An accessible passivated stainless steel one-piece cartridge with segmented port design and full travel linear coil spring.

   b. Pressure/temperature test valves for verifying the pressure differential across the cartridge and system temperature shall be provided on each valve

   c. Flow control cartridge assembly shall be precision ground; all AISI type 300 series passivated stainless steel.

   d. Cartridge shall be available in four PSID control ranges with, minimum range capable of being activated by less than 2 PSID and capable of controlling flow within ±5% of rated flow.

   e. Flow control cartridge shall be removable from body of valve for service and/or replacement.

3. Manufacturer shall supply certified independent laboratory tests verifying accuracy of performance of all products.

4. Shall have single or multiple, parallel-installed stainless steel cartridge assemblies to provide rated flow rate; shall include all plated steel studs required for installation shall be available in 3", 4", 6", 8", 10", 12", 14", 20" and 30" sizes, with flow rates from 14.0 GPM to 12,750.0 GPM.

5. Valves shall be permanently marked to indicate:

   a. Show flow rate.
   b. PSID control range.
   c. Direction of flow.

6. Valve

   a. Sizes 1 1/2" and less:

      1) Shall have female NPT end connections
      2) Shall be supplied with pressure/temperature test valves,
      3) Shall be permanently marked to show direction of flow,
      4) Shall have body tag to indicate flow rate, model number and PSID.

5) For steel pipe

a) Threaded iron valves shall consist of ductile iron body and accessible stainless steel flow control cartridge assembly, shall be rated at 450 psi/200°F
b) Similar to Griswold Model 35

6) For copper pipe

a) Threaded valves
b) Removable flow cartridge from the y-pattern
c) Ametal brass copper alloy body
d) Rated at 400 psi/250°F.

e) For brazed pipe.

(1) Shall accept direct soldering to copper tubing.

7) Similar to Griswold Series 35

b. For pipe sizes 1 1/2" and 2 1/2" valves shall consist of

1) Grey iron (ASTM A126-61T, Class 30) body

2) Accessible stainless steel flow control cartridge assembly.

3) Valves shall be rated at 300 psi/275°F

4) Shall have female NPT threaded flange end connections and shall be supplied with plated steel studs and nuts.

5) Valves shall be permanently marked to show direction of flow; shall have body tag to indicate model number, flow rate and PSID control range

6) Similar to Griswold Model 354

c. For steel pipe sizes larger than 2 1/2", valves shall be:

1) Wafer type and shall consist of a grey iron (ASTM A-126-61T, Class 30) body and accessible stainless steel flow control cartridge assemblies

2) Shall be rated at 200 psi,/250°F; shall be mechanically compatible with ANSI B/16.1-1967 125 lb.

3) MSS-SP-44 150 lb. steel flanges.

4) Wafer type consisting of a ductile iron ASTM A536 body, compatible with Class 150 or 300 lb. flanges, extended pressure/temperature ports, stainless steel flow cartridge, rated at 600 psi/250°F.

5) Similar to Griswold Model 3

7. Accessories

a. Meter kit with:

1) Portable

2) Double-hose kit,

3) Pressure gauge with 4 1/2" dial shall have range of -14.7 to 150 psi.

4) End connections for pressure/temperature test valves.

5) Carrying cases, all kits shall include

6) Laminated flow rate chart for determining flow rate.

b. Identification tags (all valves)

1) Tags shall be indelibly marked with flow rate, model number, zone identification, and tags shall be 3" x 3" aluminum.

c. P/T adaptor shall include pressure/temperature test valve for measuring the temperature and/or pressure differential across the terminal unit.

2.13 BUTTERFLY VALVES

A. High Performance (For services above 150°F)

1. Sizes 2 1/2" and larger shall be an **ANSI class valve** equal to or greater than the class specified for the service but in no case be less than ANSI Class 150.

2. Body:

a. Carbon steel

b. Fully lugged body .suitable for bi-directional tight shut off to full rated pressure without a downstream flange.

3. Valve shall have no disk contact with the seat when in the open position or any intermediate position.

4. Seal suitable for the operating service and operating temperature plus 50°F.

5. Bearings shall be constructed of SS/Graphite.

6. Seats shall be Xtreme (X).

7. Valve shall be of the double off-set design.

8. The disk shall be 316 stainless steel.

9. The shaft shall be 17-4 PH stainless steel.

10. The disk pin shall be 316 or 17-4 stainless steel.

11. Seat retainer ring fasteners shall not in contact with system fluid.

12. The disk shall be stainless steel.

    a. Operator

        1) Less than 6" except

            a) Lever Operator except for steam service.

                (1) Infinite Positioner:
                (2) Ductile iron ASTM A536.
                (3) With position indicator which shall also indicate "open" and "closed" position.
                (4) Provide memory stop.

        2) Valve Sizes 6" and Greater and all sizes for steam service.

            a) Gear Operator

                (1) Cast iron ASTM A126
                (2) Housing Class B.
                (3) Shaft bearings: Bronze.
                (4) Worm gear: Steel ASTM A216.
                (5) Segment gear: Ductile iron ASTM A536.

                (6) Handwheel: Ductile iron ASTM A536.

                    (a) Minimum diameter

                        ((1)) 12" for valve sizes through 20".
                        ((2)) 18" for valves larger than 20".

                (7) Position indicator and shall also indicate "open" and "closed" position.
                (8) Provide memory stop.
                (9) All gearing shall be enclosed in a housing.

b. Class 150

1) Similar to Jamesbury series 815 High performance wafer sphere butterfly valve.

c. Class 300

1) Similar to Jamesbury series 830 High performance wafer sphere butterfly valve.

B. Soft Seated (For services below 150°F):

1. Sizes 2 1/2" and Larger: Suitable for bi-directional dead end service (full pressure rating of valve) with downstream flange removed.

2. Minimum 250 psig bubble tight shut-off with flow in either direction.

3. Valve shall comply with MSS-SP67, or MSS SP-68, unless more stringent requirements are specified.

4. Each valve shall be hydrostatically tested at the factory to 110% of pressure rating and proven bubble tight for a minimum of (1) minute.

a. Body:

1) Cast iron ASTM A126 minimum Class B, ductile iron ASTM A536, carbon steel ASTM A515 or A516 minimum grade 70, or cast carbon steel ASTM A216 WCB.

2) Fully lugged body drilled and tapped for ANSI B16.5 Class 150 flanges.

3) Ductile iron ASTM A536. Grooved end body. (Sizes 14” through 24” supplied with AGS grooved ends.)

5. Disc:

a. Streamline design for low pressure drop and resistance to cavitation.

b. Electroless nickel coated ductile iron ASTM A536, aluminum bronze ASTM B1011/1011M, or 316 stainless steel ASTM A351 CF8M.

c. Machined and polished to minimize seating torque and extend seat life.

d. Attached to shaft by stainless steel screws, pins or integral key.

6. Disc flutter is not acceptable.

7. Shaft:

a. One-piece through shaft or 2-piece shaft design

b. Blowout proof:

1) Shall not rely on operator for retention.

c. Shall be 316 stainless steel ASTM A276 type 316 or 17-4 PH stainless steel ASTM A564 Type 630.

1) Seal by valve seat with secondary seal "O" ring or adjustable packing gland with Teflon packing.

8. Shaft Bushings:

a. Shaft bushings at each end of seat.

1) Bushings shall be reinforced Teflon, fiberglass with TFE lining, 316 stainless steel backed TFE, low friction bronze ASTM B438 or stainless steel.

9. Seat:

a. Bonded encapsulating the valve interior or seat with a mechanically attached retaining ring.

b. Ethylene propylene diener monomer (EPDM).

10. Operator

a. Sizes Less Than 6

1) Lever Operator.

a) Infinite positioner:
b) Ductile iron ASTM A536.
c) Position indicator which shall also indicate "open" and "closed" position.
d) Provide memory stop.

b. Sizes 6" and Greater

1) Gear Operator

a) Housing: Cast iron ASTM A126 Class B.
b) Shaft bearings: Bronze.
c) Worm gear: Steel ASTM A216.
d) Segment gear: Ductile iron ASTM A536.

e) Handwheel: Ductile iron ASTM A536.

(1) Minimum diameter

(a) 12" for valve sizes through 20"
(b) 18" for valves larger than 20".

f) Provide operator with position indicator and shall also indicate "open" and "closed" position.
g) Memory stop
h) All gearing shall be enclosed in a housing

c. Valves through 20"

1) Similar to Bray Series 31H.

d. Valves 24” and larger

1) Use high performance Full ANSI rated valve.

C. Grooved End Soft Seated: Butterfly Valves: (When approved for services below 150°F.)

1. Ductile iron grooved end body.

2. Bubble-tight shutoff, bi-directional.

3. Dead-end service at full rated pressure without down stream flange.

4. Disc

a. Electroless nickel-plated ductile iron
b. Offset from the stem centerline to provide continuous 360 degree seating.

5. Stem: Blowout-proof 416 stainless steel

6. Bearings: TFE lined fiberglass.

7. EPDM seat and seal material,

8. lever handle or gear operator with handwheel

9. memory stop,

10. Sizes 2” through 12

a. Rated at 300 psi, 250°F.

b. Similar to Victaulic Vic-300 MasterSeal,

11. Sizes 14” through 24”

a. Rated at 300 psi, 230°F.

b. Similar to Victaulic Vic-AGS-300.

12. Sizes above 24”

a. Use High performance valve.

2.14 STRAINERS

A. General

1. Screwed ends to 2", flanged or grooved ends 2 1/2" and up.

2. Body

a. Class 150 lbs.

1) Ductile iron or carbon steel Note cast brass may be used for copper piping systems.

b. Class 300

1) Ductile iron or carbon steel.

c. Over Class 300

1) Forged steel or cast steel.

3. Screen

a. 316 Stainless steel or Monel.

b. Free area not less than 2.5 times inlet area.

c. Perforations (unless noted otherwise)

1) Water

a) Up to 4": 1/16"
b) 6" & 8": 1/8"
c) 10" & Up: 5/32"

2) Steam and Condensate

a) Up to 2": 1/64"
b) 2 1/2 to 4": 1/32"
c) 5" & Up: 3/64"

d. Construction

1) Screen wire gauge to suit size and service.
2) Reinforced.

e. Magnets (Except for Handwheel Operated Type)

1) Water Strainers

a) All 8" and larger.
b) Each pump suction.

2) Provide continuous magnetic field around entire circumference of screen.

3) Removable cast Alnico #5 channel magnets or approved baskets constructed of magnetic alloy.

4) Secure magnets with stainless steel retaining lugs and threaded rods.

B. Y Type

1. Up to 2 1/2""

a. Threaded and gasket.

b. Class 300

1) Similar to Mueller Steam Specialty Fig. #251DI.

c. Socket welded

1) Class 600 Similar to Mueller Steam Specialty 582.

d. Grooved

1) Carbon steel or Ductile Iron

2) Class 150

a) Similar to Mueller Steam Specialty Fig. #781.

3) Class 300

a) Similar to Mueller Steam Specialty Fig. #782.

2. 2 1/2" and larger

a. Flanged or Grooved

b. Carbon steel or Ductile Iron

c. Bolted cover

d. Class 150

1) Similar to Mueller Steam Specialty 781M.

e. Class 300

1) Similar to Mueller Steam Specialty 782.

C. Basket Type

1. Carbon steel body.

2. Suitable for service

3. Screen size: See Y type strainers

4. Bolted cover, bottom drain connection.

5. Class 150

a. Similar to Mueller Steam Specialty Fig. #185

6. Class 300

a. Similar to Mueller Steam Specialty Fig. #186

D. Duplex Type

1. Fuel Oil

a. Carbon steel body.

b. Suitable for oil service

c. Screen size shall be 40 MESH note for #4 or #6 use 3/64” perforations.

d. Class 150

1) Similar to Mueller Steam Specialty Fig. #792FD

e. Class 300

1) Similar to Mueller Steam Specialty Fig. #794FD

2. Diesel Oil

a. Carbon steel Body.

b. Suitable for oil service

c. Screen size shall be 40 MESH note for #4 or #6 use 3/64” perforations.

d. Class 150

1) Similar to Mueller Steam Specialty Fig. #792FD

e. Class 300

1) Similar to Mueller Steam Specialty Fig. #794FD

3. Condenser Water

a. Up to 6" IPS

1) Carbon steel body.

2) Suitable for oil service

3) Screen size: See Y type strainers

4) Class 150

a) Similar to Mueller Steam Specialty Fig. #792FD

5) Class 300

a) Similar to Mueller Steam Specialty Fig. #794FD

b. 8" & Up

1) Carbon steel body.

2) Monel basket

3) Integral mechanism to permit servicing without interrupting flow.

4) Class 150

a) Similar to Mueller Steam Specialty Fig. #692MFD

PART 3 – INSTALLATION OF VALVES AND STRAINERS

3.1 VALVES

A. Provide valves, check valves, balancing valves and cocks, and lubricated plug as noted and as indicated on drawings.

B. Shutoff Valves

1. Inlets and outlets of equipment.
2. All branch connections to mains.
3. As noted.

C. Check Valves

1. Pump Discharges: Silent check valves
2. Other Locations: Types as noted

D. Valves

1. Accessible, but no valve handles pointing down below horizontal position. Removable without separating or lifting piping in which valves are installed. Provide cap screws on threaded bodies. Where abutting flanged strainers or similar devices, position valve with respect to device so as to permit removal of bolts.

E. Drain valves at low points in water piping and where noted.

1. In Equipment Rooms

a. Up to 3" Pipe: 3/4"gate or ball valve
b. 3" to 4" Pipe: 1 " gate or ball valve
c. 5” Up Pipe: 2 " gate or ball valve

2. 3/4" drain valve gate or ball valve.

3. All drains shall be provided with a brass hose connection with a pressure rated brass cap with a chain.

a. 3/4 hose thread

b. 1” and 2”use brass pipe thread by straight thread hose connection.

c. Each shall be provided with brass pressure rated cap and chain.

d. No dust covers shall be allowed or caps with holes covered by gaskets.

F. Manual air vents at high points and where required to expel air.

1. Up to 3" Pipe

a. Line size air chamber, 12" long, 1/2" gate valve.

2. 4" to 8" Pipe

a. Line size air chamber, 6" long, 1/2" gate valve.

3. 10" & Up

a. Line size pipe cap, 1/2" gate valve.

G. Where possible install gate, globe and ball valves with stems upright and not more than 15° off of vertical, not inverted.

H. Where possible install butterfly valves with stems in horizontal position and with the low point of disc opening with the direction of flow.

I. Provide stem extensions for insulated lines on all valves such that hand wheel or lever extends beyond insulation and is operable.

J. Ball valves (line sizes through 2") and butterfly valves (line sizes 2 1/2 " and larger) may be used interchangeably with gate valves for shut-off and isolating service in all water systems. Note soft seated butterfly valves can only be used in water services below 150°F. All butterfly valves in water services above 150°F shall be of the high performance type.

K. Use Globe valves (line sizes through 2") and flow control-balancing valve (through 12”) lubricated plug valves (line sizes 14" and larger) in water systems for throttling service. Use lubricated plug valves for line sizes smaller than 12" where shown on drawings.

L. Provide spring loaded silent type check valves on discharge of pumps.

M. Install swing check valves in horizontal position only.

N. Provide drain valves at low points between valves, low points of piping system and at equipment.

O. No butterfly valves shall be used in steam systems except high performance type where indicated.

P. All steam service high performance butterfly valves shall be provided with gear operators.

Q. Threaded valves shall be provided with a union adjacent to and downstream of valve.

R. Grooved end valves shall be provided with grooved joint couplings.

S. Butterfly valves shall not be used for balancing.

T. Remove internal cartridges from constant flow valves during flushing and cleaning.

U. Butterfly valves shall be installed between weld neck flanges, grooved joint couplings or grooved flange adapters.

V. Provide chain operated sheaves for valves in exposed areas located more than 7'-0" from floor. Provide chain lever kits for all ball valves in exposed areas located more than 7'-0" from floor. Extend chains to about 5'-0" from above floor and hook to clips arranged to clear walking aisles.

W. Pressure Relief Valves

1. Provide at:

a. Cooling coil side of isolation valve.
b. Sectionalized chilled water mains and submains.
c. Sectionalized chilled water and secondary chilled water mains and submains.

d. Equipment side of isolation valve.

1) Water chillers
2) Heat exchangers
3) Convertors in water piping.

e. Other locations as noted.

2. Pipe to spill over floor drain or slop sink unless otherwise indicated.

3.2 STRAINERS

A. Valved and provided with hose connection chain and pressure rated cap. (See strainer assembly detail.)

B. Line size, except as noted.

C. Locate upstream of:

1. Pumps
2. Automatic control valves, except water valves smaller than 1 1/2”, if a central strainer system is used on each floor up stream of the control valve.
3. Steam condensate drip traps
4. Pressure reducing valves
5. Other equipment as noted
6. At steam pressure reducing valves:
7. As indicated

END OF SECTION

SECTION 23 0529 – HANGERS AND SUPPORTS

PART 1 – GENERAL

1.1 RELATED DOCUMENTS

A. Drawings and general provisions of the Contract, including General and Supplementary Conditions, Section 230500 and other Division 1 Specification Sections, apply to this Section.

B. LEED Building General Requirements: The Owner requires the Contractor to implement practices and procedures to meet the project's environmental performance goals, which include achieving LEED Certification. Specific project goals that may impact this area of work include: Use of recycled-content materials; use of locally-manufactured materials; use of low-emitting materials; construction waste recycling; and the implementation of a construction indoor air quality management plan. The Contractor shall ensure that the requirements related to these goals, as defined in the sections below, are implemented to the fullest extent. Substitutions, or other changes to the work proposed by the Contractor or their Subcontractors, shall not be allowed if such changes compromise the stated LEED Building Performance Criteria.

1. Comply with LEED (Leadership in Energy and Environmental Design) Green Building Rating System BD+C, Version 3.

1.2 WORK INCLUDED

A. Furnish and install all hangers, supports and assemblies for all parts of the mechanical systems. This shall include all piping, ducts and equipment specified in this Division and as shown on the drawings

B. All materials shall be new and manufactured for the specific purpose of supporting systems, equipment, pipes, ducts, conduits and accessories.

C. All system components shall be installed in accordance with local codes including seismic isolation as required and specified under Section 230548.

D. Refer to Section 230516 Pipe Expansion and closely coordinate with this work.

E. Secure all permits and local/state approval for the components as specified and included under this Section.

1.3 RELATED SECTIONS

A. Examine all drawings and criteria sheets and all other Sections of the Specifications for requirements which affect work under this Section whether or not such work is specifically mentioned in this Section.

B. Refer to Section 230548 – Mechanical Vibration Controls and Seismic Restraints for specified information related to and affecting this section.

C. Refer to Section 230516 – Pipe Expansion.

D. Section 017419 "Construction Waste Management and Disposal" for requirements related to construction waste management and disposal at the project site.

E. Section 018113 "VOC Limits for Adhesives, Sealants, Paints and Coatings" for restrictions of VOC in adhesives, sealants, paints and coatings.

F. Section 018119 "Construction Indoor Air Quality (IAQ) Management" for requirements during construction for indoor-air-quality management.

1.4 REFERENCES

A. Applicable provisions of the following Codes and Trade Standard Publications shall apply to the work of this Section, and are hereby incorporated into, and made a part of the Contract Documents.

1. Material standards shall be as specified or detailed hereinafter and as following:

a. ASME B31.9 – Building Services Piping, The American Society of Mechanical Engineers.

b. ASME B31.1 – power piping.

c. ASHRAE Systems and Equipment Handbook.

d. ASTM F 708 – Standard Practice for Design and Installation of Rigid Pipe Hangers.

e. MSS SP-58 – Pipe Hangers and Supports – Materials, Design and Manufacture; Manufacturers Standardization Society of the Valve and Fittings Industry.

f. MSS SP-69 – Pipe Hangers and Supports – Selection and Application; Manufacturers Standardization Society of the Valve Fittings Industry.

g. MSS SP-89 – Pipe Hangers and Supports – Fabrication and Installation Practices; Manufacturers Standardization Society of the Valve and Fittings Industry.

h. NFPA-13 – Installation of Sprinkler Systems

i. MSS-SP-127-2001 – Bracing for Piping Systems.

1.5 SYSTEM DESCRIPTION

A. In addition to special hangers and supports specified elsewhere in this Section and shown on the drawings for ducts, piping and equipment, furnish and install safe and substantial means of support for all parts of the mechanical systems. Shop drawings shall be submitted for review and approval for all supports. All piping, ductwork, exhaust pipe and breeching hangers and supports in all mechanical rooms, penthouses and energy plant shall be installed with vibration isolators and Seismic restraints. This requirement is mandatory and shall be strictly enforced.

B. All piping shall be hung to true alignment, using appropriate and substantial hanger arrangements. Wire and strap hangers will not be permitted. Hangers shall be located so that piping and hangers will be clear of other piping, hangers, conduits, lighting and other obstructions.

C. The hanging and supporting of piping and equipment shall conform to recommendations of the manufacturers of same and American National Standard, ANSI/MSS SP-58 and SP-69 latest edition, except where requirements of this specification exceed the above referenced Standards.

1.6 SUBMITTALS

A. See Section 230500 and General Conditions for additional requirements.

B. All brackets and hangers shall be submitted for review. Include the method of hanging and supporting all piping, ductwork and equipment.

C. The Architect is to be notified when the first bracket is assembled so that the installation can be reviewed in the field.

D. Provide location of all inserts to be used for hanging ductwork, piping and equipment and the weight of all components (including water weight).

1.7 QUALITY ASSURANCE

A. Manufacturer: Company specializing in manufacturing products of the type specified in Part 2 – Products.

B. Installer: Company specializing in performing work of the type specified in this section, with documented experience.

C. Welders: Certify in accordance with ASME.

1.8 REGULATORY REQUIREMENTS

A. Conform to ASME B31.9 code for installation of piping system and supports.

B. Conform to ASME B31.1 code for power piping.

C. All applicable seismic codes.

D. ASTM F708 for design and installation of pipe hangers.

E. Welding Materials and Procedures: Conform to ASME (BPV IX) and applicable state labor regulations

1. Provide certificate of compliance from authority having jurisdiction, indicating approval of welders.

1.9 DELIVERY, STORAGE AND HANDLING

A. All hangers and supports shall be delivered in containers and shall be kept in a dry and protected area.

B. All exposed hangers, supports, etc. shall be given 2 coats of rust resistant paint of a color selected by the Architect prior to installation.

1.10 ENVIRONMENTAL

A. Do not paint or install inserts, hangers and/or supports when environmental conditions are outside the specific limitations of the referenced codes and manufacturer's recommendations.

PART 2 – PRODUCTS

2.1 GENERAL

A. Pipe supports shall be of type and figure number as specified.

B. Acceptable manufacturers subject to compliance with the specifications shall be as follows:

1. Pipe Hangers

a. Carpenter & Patterson
b. B-Line
c. Grinnell
d. National Pipe Hanger Corp.
e. Piping Technology & Products Inc.
f. PHD Manufacturing, Inc.

2. Constant Force Hangers.

a. Anvill International, Inc.
b. Piping Technology & Products Inc.
c. Piping Accessories, Inc.
d. Rilco Manufacturing Co.
e. PHD Manufacturing, Inc.

3. Channel Support Systems

   a. B-Line Systems, Inc.
   b. Grinnell Corp. Power-Strut Unit
   c. GS Metals Corp.
   d. Michigan Hanger Co., Inc. O-Strut Div.
   e. National Pipe Hanger Corp.
   f. Thomas & Betts Corp.
   g. Unistrut Corp.
   h. Wesanco, Inc.

4. Thermal-Hanger Shield Inserts

   a. Carpenter & Patterson, Inc.
   b. Michigan Hanger Co., Inc.
   c. PHS Industries, Inc.
   d. Pipe Shields, Inc.
   e. Rilco Manufacturing Co., Inc.
   f. Value Engineered Products, Inc.

2.2 PIPE HANGERS

A. Bracket assemblies for supporting piping are to be fabricated by welding and all irregular surfaces are to be smoothed up by grinding. Shop drawings shall be submitted for review for each type bracket. The Architect is to be notified when the first bracket is assembled so that installation can be reviewed in the field. Exposed hangers, supports and brackets are to be given (2) coats of rust resistant paint of the color as selected by the Architect. Additionally, provide for Architect's review, the following:

   1. Location of all inserts to be used for hanging ductwork and piping where applicable and the weight of such pipe or equipment to be hung, including the weight of water, valves and insulation.

   2. Method of hanging and support of all piping, ducts and other equipment.

B. All pipe supports shall be of type and arrangement as hereinafter specified. They shall be so arranged as to prevent excessive bending stresses between supports.

C. All bracket clamp and rod sizes indicated in this specification are minimum sizes only. This Section shall be responsible for structural integrity of all supports. All structural hanging materials shall have a safety factor of (5) built in. Beam clamps shall be 2-sided steel clamps designed to firmly attach to the flange of the beam with the load directed downward on the centerline of the beam web. Beam clamps shall be similar to B-Line #B3055, or approved equal.

D. Other forms of hangers and supports shall be used to accommodate special or unusual job conditions or conditions not covered herein, subject to the approval of the Architect. When special conditions require the use of concrete inserts which are not "built in", such inserts may be used in locations approved by the Architect and shall be

Phillips "Red Head" or approved equal. Explosive powder studs or detonator assisted studs or anchors will not be permitted.

E. All pipes shall be hung free of dependence on pipe sleeves for support.

F. All auxiliary steel required for pipe, duct and equipment supports shall be furnished and installed by the Mechanical Contractor.

G. Threaded pipe, chains, wire and perforated straps will not be accepted. No piping shall be supported from ductwork, conduit or other piping. All system components and equipment shall be independently supported. Distribute hangers on parallel piping to avoid overloading of structure.

H. Roller type supports shall be used for pipes subject to axial movement (all hot water steam, condensate and any emergency generator exhaust). They shall be braced so that movement occurs in roller rather than support rods. This requirement shall apply to piping 2 1/2" and up.

I. Constant force support hangers shall be provided for the emergency generator exhaust piping as determined by the stress and seismic analysis. Constant force hangers shall be similar to Anvil International, Inc. and they shall be pre-engineered to meet the loads and expansion for the vertical risers and off sets if any.

J. Hangers and supports used for systems exposed to weather shall be hot dipped galvanized in accordance with ASTM A153-73 or A123. Rods and nuts shall be electro-galvanized.

K. All horizontal water, drain, waste, vent and rainwater piping shall be hung with clevis steel hangers similar to B-Line #B3100. Groups of pipes in the same horizontal plane and with the same pitch may be supported on B-Line #3160 gang hangers. Wall brackets similar to shall be B-Line #B3066 and #B3077.

L. All pipes which are hung so that the centerline of the pipe is less than 10" below the point of suspension of the hanger rod and all hydronic hot water piping shall be supported on roller hangers similar to B-Line #B3110.

M. Unless otherwise noted, maximum hydronic pipe hanger spacing shall not exceed the recommendations of the pipe manufacturer and the following:

1. For 1/2" copper and steel pipe: 5'-0" o.c.

2. For pipe 3/4" to 1 1/2": 8'-0" o.c.

3. For pipe 2" to 8": 10'-0" o.c.

4. For pipes 10" and up: 15'-0" o.c.

5. In addition, hangers shall be installed within 2'-0" of each change in direction and on each side of valves 3" in size and up.

N. Hanger rods shall be of steel and not less in diameter than:

1.	For pipe 2" and under:	3/8"
2.	For pipe 2 1/2" and 3":	1/2"
3.	For pipe 4" and 5":	5/8"
4.	For pipe 6":	3/4"
5.	For pipe 8", 10" and 12":	7/8"
6.	For pipe 14" and 16":	1"
7.	For pipe 18" and up:	1 1/4"

O. Insulated steel piping 2 1/2" and up, except chilled water, shall be fitted with steel pipe covering protection saddles similar to B-Line #B3163 and of the same depth as the specified insulation. Saddles shall be tack welded to the pipe and filled with loose insulation. Standard length saddles may be cut in (2) equal sections for attachment to pipes 6” diameter and under.

P. Insulated piping 2" and under, except chilled water, shall be fitted with 16 gauge steel covering protectors at each hanger location similar to B-Line #B3151.

Q. Chilled water piping shall be insulated with high density hydrous calcium silicate shields where hangers occur similar to #B3380CW. Special care shall be exercised to assure a continuous vapor barrier installation to protect the system and prevent sweating.

R. All vertical piping shall be supported with steel riser clamps similar to B-Line #B3773. Such clamps on copper tubing shall be applied over couplings only.

S. All pipes suspended at an elbow shall be hung using plate lugs similar to Grinnell #HS.53 with forged steel clevis similar to B-Line #B3201.

T. Spring hanger locations shall be provided as specified herein, under vibration isolation, and shall be Grinnell, pre-engineered to meet loads and movements in accordance with ANSI B.31.1.10, where applicable.

U. Drop rods for hangers may be used wherever possible and shall be installed prior to slabs being poured. Drop rod details shall be submitted to the Architect and Engineer for review.

2.3 DUCT HANGERS

A. See Specification 233100 Sheet Metal.

2.4 MISCELLANEOUS MATERIALS

A. Mechanical-Anchor Fasteners: Insert-type attachments with pull-out and shear capacities appropriate for supported loads and building materials where used.

B. Structural Steel: ASTM A 36M, steel plates, shapes, and bars, black and galvanized.

C. Grout: ASTM C 1107, Grade B, factory-mixed and packaged, non-shrink and nonmetallic, dry, hydraulic-cement grout.

1. Characteristics: Post hardening and volume adjusting recommended for both interior and exterior applications.

2. Properties: Non-staining, non-corrosive and nongaseous

3. Design Mix: 5000-psi, 28-day compressive strength.

PART 3 – EXECUTION

3.1 PREPARATION

A. All hangers, rod and supports shall receive two (2) coats of rust inhibitive paint.

B. Provide inserts for placement in concrete formwork.

C. Provide inserts for suspending hangers from reinforced concrete slabs and sides of reinforced concrete beams.

D. Provide hooked rod to concrete reinforcement section for inserts carrying pipe over 4 inches.

E. Where concrete slabs form finished ceiling, locate inserts flush with slab surface.

3.2 INSTALLATION

A. Pipe Hangers and Supports.

1. Install in accordance with ASME B31.9, ASTM F 708, or MSS SP-89 or NFPA-13.

2. Support piping, ductwork and equipment as specified under Part 2.

3. Install hangers to provide minimum ½ inch space between finished covering and adjacent work.

4. Place hangers with 24 inches of each horizontal elbow and on each side of valves 3” in size and up.

5. Use hangers with 1-1/2 inch minimum vertical adjustment. Design hangers for pipe movement without disengagement of supported pipe.

6. Support vertical piping at every floor. Support riser piping independently of connected horizontal piping.

7. Where several pipes can be installed in parallel and at same elevation, provide multiple or trapeze hangers.

8. Provide copper plated hangers and supports for copper piping or between hanger support and piping.

9. Prime coat (2 coats rust inhibitive paint) exposed steel hangers and supports. Hangers and supports located in crawl spaces, pipe shafts, and suspended ceiling spaces are not considered exposed.

10. Provide clearance in hangers and from structure and other equipment for installation of insulation and access to valves and fittings.

B. Where pipe support members are welded to structural building framing, scrape, brush clean and apply two coats of zinc rich primer to welds.

3.3 INSERTS

A. Use inserts for suspending hangers from reinforced concrete slabs and sides of reinforced concrete beams.

B. Set inserts in position in advance of concrete work. Provide reinforcement rod in concrete for inserts carrying pipe over 4 inch or ducts over 60 inches wide.

C. Finish inserts, flush with slab surface.

D. Inserts: Steel, slotted type, factory-painted.

1. Single rod: Similar to Grinnell Figure 281.

2. Multi-rod: Similar to Carpenter and Paterson 1480 Type 1.

3. Clip form nails flush with inserts.

4. Maximum load 75 percent of rating.

3.4 SUPPORTS FROM BUILDING CONSTRUCTION

A. Inserts, Beam Clamps, Steel Fishplates (in concrete fill only), Cantilever Brackets or Other Means.

B. Submit for Review.

C. Grouped Lines and Services

1. Trapeze Hangers fabricated of Bolted Angles or Channels.

D. Where Building Construction is Inadequate

1. Provide Additional Framing.

2. Submit for Review.

3.5 EXPANSION DEVICES

A. Expansion anchors: Similar to Hilti "Drop-In Anchor HDI" flush type.

B. Drill concrete to receive required expansion cases on concrete fasteners.

C. Install in shear only, not in tension.

3.6 EQUIPMENT BASES AND SUPPORTS

A. Provide rigid anchors for ducts and pipes immediately after vibration connections to equipment.

B. Refer to Specification Sections 230500 and 230548 for additional information.

C. Fabricate structural-steel stands to suspend equipment from structure above or to support equipment above floor.

D. Grouting: Place grout under supports for equipment and make smooth bearing surface.

3.7 METAL FABRICATION

A. Cut, drill, and fit miscellaneous metal fabrications for heavy-duty steel trapezes and equipment supports.

B. Fit exposed connections together to form hairline joints. Field-weld connections that cannot be shop-welded because of shipping size limitations.

C. Field Welding: Comply with AWS D1.1 procedures for shielded metal arc welding appearance and quality of welds, and methods used in correcting welding work, and with the following:

1. Use materials and methods that minimize distortion and develop strength and corrosion resistance of base-metals.

2. Obtain fusion without undercut or overlap.

3. Remove welding flux immediately.

4. Finish welds at exposed connections so no roughness shows after finishing and contours of welded surfaces match adjacent contours.

3.8 ADJUSTING

A. Hanger Adjustment: Adjust hangers to distribute loads equally on attachments and to achieve indicated slope of pipe.

3.9 PAINTING

A. **Touchup**: Clean field welds and abraded areas of shop paint. Paint exposed areas immediately after erecting hangers and supports. Use same materials as used for shop painting. Comply with SSPC-PA 1 requirements for touching up field-painted surfaces.

1. Apply paint by brush or spray to provide a minimum dry film thickness of 2.0 mils.

B. Galvanized Surfaces: Clean welds, bolted connections, and abraded areas and apply galvanizing-repair paint to comply with ASTM A 780.

END OF SECTION

SECTION 23 0533 – ELECTRIC HEAT TRACING

PART 1 - GENERAL

1.1 RELATED DOCUMENTS

A. Drawings and general provisions of the Contract, including General and Supplementary Conditions, Section 230500 and other Division 1 Specification Sections, apply to this Section.

B. LEED Building General Requirements: The Owner requires the Contractor to implement practices and procedures to meet the project's environmental performance goals, which include achieving LEED Certification. Specific project goals that may impact this area of work include: Use of recycled-content materials; use of locally-manufactured materials; use of low-emitting materials; construction waste recycling; and the implementation of a construction indoor air quality management plan. The Contractor shall ensure that the requirements related to these goals, as defined in the sections below, are implemented to the fullest extent. Substitutions, or other changes to the work proposed by the Contractor or their Subcontractors, shall not be allowed if such changes compromise the stated LEED Building Performance Criteria.

1. Comply with LEED (Leadership in Energy and Environmental Design) Green Building Rating System BD+C, Version 3.

1.2 WORK INCLUDED

A. Acceptable manufacturers contingent upon compliance with the specifications.

1. Raychem
2. Pyrotenax
3. Thermon
4. Nelson
5. Dekoron

B. This specification covers the requirements for the design, installation, and testing of an electrical heat tracing system for insulated pipes and vessels.

C. The design, drawings, equipment and materials supplied shall be in conformance to this specification and the terms listed in the purchase order. It is the seller's responsibility to comply with this requirement.

D. All heat tracing materials, components, and accessories shall be new, unused, undamaged and of a grade and quality specified in the manufacturer's literature.

E. Design and installation shall be in strict compliance with the manufacturer's published recommendations and specifications.

1.3 RELATED SECTIONS

A. Examine all drawings and criteria sheets and all other Sections of the Specifications for requirements which affect work under this Section whether or not such work is specifically mentioned in this Section.

B. Section 017419 “Construction Waste Management and Disposal” for requirements related to construction waste management and disposal at the project site.

C. Section 018113 “VOC Limits for Adhesives, Sealants, Paints and Coatings” for restrictions of VOC in adhesives, sealants, paints and coatings.

D. Section 018119 “Construction Indoor Air Quality (IAQ) Management” for requirements during construction for indoor-air-quality management.

1.4 REFERENCES

A. The electric heat-tracing system shall conform to this specification. It shall be designed, manufactured, and tested in accordance with the applicable requirements of the latest edition of the following codes and standards.

1. ANSI American National Standards Institute
2. NEC National Electrical Code
3. CEC Canadian Electrical Code
4. CSA CSA International
5. FM FM Approvals
6. IEC 216 International Electro-Mechanical Commission
7. IEEE 515 Institute Of Electrical and Electronics Engineers
8. ITS Intertek Testing Services (ETL)
9. BS6351 British Standard for Electrical Surface Heating
10. NEMA National Electrical Manufacturers Association
11. NESC National Electrical Safety Code
12. UL 746B, UL 508 Underwriters’ Laboratories, Inc.
13. Local codes and requirements

1.5 SUBMITTALS

A. See Section 230500 and General Conditions for additional requirements.

B. Product Data: Provide data for each system component.

C. Shop Drawings.

1. Include all calculations.

2. Show system configuration with peripheral devices, batteries, power supplies, diagrams and interconnections.

3. Indicate description and sequence of operation of operating, user and application software

D. Manufacturer's Installation Instructions: Indicate manufacturer's installation instructions for all manufactured components.

E. Operations and Maintenance Data:

1. Include interconnection wiring diagrams for complete field installed systems with identified and numbered, system components and devices.

2. Include inspection period, cleaning methods, recommended cleaning materials and tolerances.

F. Warranty: Submit manufacturer's warranty and ensure forms have been filled out in Owner's name and registered with manufacturer.

1.6 QUALITY ASSURANCE

A. Perform work in accordance with NFPA 70.

PART 2 - PRODUCT

2.1 GENERAL

A. Heat loss calculations shall conform to the guidelines stated in IEEE Publication 515-1989.

B. A 10% safety factor shall be used for all heat loss calculations.

C. The following worst-case ambient conditions shall be used in the heat loss determination.

1. Minimum Ambient Temperature = 0 °F
2. Maximum Wind Speed = 20 MPH

2.2 THERMAL INSULATION

A. All heat traced pipes and vessels shall be insulated.

B. See Specification Section 230719 – Piping Insulation and 230716 – Equipment Insulation.

2.3 ELECTRICAL CONDUIT

A. Electrical conduit shall comply with project electrical specifications as well as referenced codes.

1. Conduit shall be installed in a manner to prevent moisture entry or accumulation due to condensation. This should include bottom entry into enclosures where possible, low point conduit drains and drip loops on entry/exit wiring.

2. Equipment enclosures, conduit fittings, connection boxes, etc. should be closed or temporarily protected from moisture (rain, snow, hosing) at the end of each day.

3. Heater cable power connection points shall not be the low point in a conduit run. If at the end of a run, a low point drain should be installed below the power connection box and the conduit teed over and up to the power connection box.

2.4 ELECTRICAL HEAT TRACING SELECTION

A. The selection of the appropriate heat tracing family shall be based on the maximum maintain temperature and maximum exposure temperature. Selection of specific heaters within a family will be based on the heater power output being equal to or greater than the worst-case heat loss as calculated in Section 4.0. Additional factors such as required maintain temperature and maximum system design temperatures, i.e. maximum and minimum allowable product temperature and maximum allowable material temperature, must also be considered.

B. All heat-tracing applications with continuous exposure (maintain) temperatures from 150°F (65°C) to 250°F (121°C) or intermittent exposure temperatures from 185°F (85°C) to 420°F (215°C) shall use self-regulating cables.

C. Where heat tracing is required on lines that exceed the maximum exposure temperature of self-regulating cables, mineral insulated electric heat tracing shall be installed.

2.5 LOW TEMPERATURE, FREEZE PROTECTION

A. General

1. Maximum Maintain Temperature = 150°F
2. Maximum Exposure Temperature = 185°F

B. The electric heating cable shall be a parallel, self-regulating heater such that it can be cut to length in the field without effecting power output per unit length. Initial design shall not exceed 75% of maximum rated circuit length, allowing for added field changes.

C. Self-regulating heating cable shall vary its power output relative to the temperature of the surface of the pipe or the vessel. The cable shall be designed such that it can be crossed over itself and cut to length in the field.

D. Self-regulating heating cable shall be designed for a useful life of 20 years or more with “power on” continuously, based on the following useful life criteria:

1. Retention of at least 75 percent of rated power after 20 years of operation at the maximum published continuous exposure (maintain) temperature.

2. Retention of at least 90 percent of rated power after 1000 hours of operation at the maximum published intermittent exposure temperature. The testing shall conform to UL 7468, IEC 216-1 Part 1.

E. A warranty against manufacturing defects for a period of 10 years shall be available.

F. All Self Regulating cables shall be capable of passing a 2500 VDC dielectric test for one minute (ASTM 2633) after undergoing a 0.5 kg-m impact (BS 6351, Part 1, 8.1.10).

2.6 VESSEL HEATING PANELS

A. The tank wall, to which the panel is to be fixed, shall be prepared according to panel manufacturer's instructions.

B. Panels shall be flexible so that they are easily fastened to the surface of the tank to be heated.

C. Panels shall be suitable for maintaining the tank wall temperature at specified temperature continuously without degrading or changing output characteristics of the panel.

D. Resistance heating elements shall be between flexible insulating layers, with a continuous operating rating of at least 200°F (93°C) and a short-term withstand rating of at least 366°F (186°C), to insulate electrically and provide mechanical protection for the heating elements. Elements shall be constant resistance.

E. Panels shall have an integrated thermostat to be used for over-temperature protection, but an additional primary control thermostat must be used.

F. All heater circuits are required to be protected with a 30 mA ground-fault protection device (GFPD).

G. For metallic tanks, supplied watt density (at 240 volts) shall be 1.9 watts/sq inch with a T-rating of T2C.

H. For plastic tanks, supplied watt density (at 240 volts) shall be 0.6 watts/sq inch with a T-rating of T4A.

I. A stainless steel ground plain on the external surface of the panel shall be supplied to provide a ground path as required by the National Electrical Code section 427-22.

J. Vendor shall supply a stainless steel junction box. Cold leads shall be Teflon-coated 14 AWG copper leads contained within liquid-tight, flexible conduit for added protection.

K. Mounting instructions and all required materials for fastening panels to the tank wall are to be furnished. Means other than thermal insulation are to be provided to hold panels in position. In addition to the specified tank heater the following materials are required: Raychem RHS Installation Kit (P/N 844869), DigiTrace 910 controller or equivalent, BCK-35 clamp kit (P/N C77215) or equivalent, Thomas and Betts 5232 conduit fitting, and 5302 sealing ring or agency approved equivalent.

L. Non-hazardous and hazardous location approvals for Class I, Division 2 Groups B, C, D, Class II Division 1 and 2 Groups E, F, G and Class III shall be existing on all heating elements.

M. Installation and operation instructions shall be provided in hard copy and available on a 24-hour accessible Internet site.

N. A Megger test at 2500 Vdc shall be performed on installation and once a year.

2.7 DISTRIBUTION PANEL

A. Provide power distribution panel.

B. The power distribution panels shall be located close to the physical location of the heat trace cables as the branch circuit breakers shall serve as local disconnect means for each heat trace circuit. Wherever practical the panels shall be located in unclassified, non-corrosive areas.

C. Critical process circuits shall be protected by a separate branch circuit breaker. No more than 2 circuits shall be grouped on a single branch circuit breaker for other circuits.

D. Heat tracing circuit control shall be provided in accordance with the following guidelines.

1. Freeze Protection, Group Control

a. For freeze protection or group control process-temperature maintenance systems, distribution panels shall consist of an enclosure, including a panelboard with ground-fault protection devices (30 mA trip level). The panels shall provide ground-fault alarm capabilities. If more than one circuit is required, a main contactor shall be used. The panels shall operate with ambient-sensing or proportional ambient-sensing controllers. The panel shall be the Tracer HTPG heat tracing panel as manufactured by Tyco Thermal Controls.

2. Individual/Process Control/Power Distribution Panel

a. For individual control process temperature maintenance systems, distribution panels shall consist of an enclosure, including a panelboard with ground-fault protection devices (30 mA trip level). The panels shall provide ground-fault alarm capabilities. Circuits shall be switched by individual contactors operated by line-sensing controllers. The panel shall be the Tracer HTPI heat tracing panel as manufactured by Tyco Thermal Controls.

E. Breakers shall be properly sized in accordance with manufacturer's recommendation.

2.8 TEMPERATURE CONTROL

A. Freeze Protection

1. Freeze protection circuits with maximum exposure temperatures 150°F or less shall be controlled with an ambient sensing thermostat and properly sized

contactor for each power distribution panel. Circuits shall be energized when ambient temperature drops to 40°F.

B. Temperature Maintenance

1. Heat tracing circuits for pipes and vessels having maintained temperatures above 40°F and/or exposure temperatures above 150°F shall be individually controlled.

2. Local temperature control shall be provided by mechanical, bulb and capillary thermostats or electronic controller approved for the area classification. Each heat tracing circuit shall be energized when pipe or vessel temperature drops below the desired maintain temperature as specified on the line list or vessel schedule. Thermostats shall be selected in accordance with electrical switching requirements provided in the heat tracing manufacturer's technical documentation.

3. Control of critical heat tracing circuits shall be accomplished with the use of a single or dual circuit digital controller. The controller shall conform to the following criteria:

a. The system shall be field-mounted and shall have FM or CSA approval for Class I, Division 2, Groups A, B, C, D when using a solid-state switching device.

b. The system shall provide the user with the option of line-sensing control with a user-selectable dead band, ambient sensing, proportional ambient sensing (PASC), and power limiting control modes.

c. The system shall provide an isolated triac alarm relay or a dry contact relay for alarm annunciation back to a Distributed Control System (DCS).

d. Electrical code-approved ground-fault detection equipment shall be integral to the controller to simplify installation and reduce total cost.

e. Enclosure type shall be NEMA 4X fiberglass reinforced plastic (FRP) or stainless steel for corrosion resistance and protection from moisture.

f. DigiTrace units may be network-ready to provide communication to a host PC running Windows™-based Supervisor software for central programming, status review, and alarm annunciation. DigiTrace units shall support the Modbus™ RTU or ASCII/HTCBus communications protocol and be supplied complete with RS-485 communications interface capability.

g. The system shall be DigiTrace 910 or DigiTrace 920 heat-tracing control systems, as manufactured by Tyco Thermal Controls.

PART 3 - EXECUTION

3.1 INSTALLATION

A. Heater installation and electrical design shall conform to the manufacturer's published specifications and guidelines.

B. All electrical heat tracing components, power connections, splices, tees and end seals shall be by the same manufacturer as the heat tracing cable and shall be approved by a Certifying Agency for installation in the designated areas.

C. Heating cable shall be installed to allow easy removal in maintenance items such as pumps, valves, strainers and filters.

D. Heater cables shall not be installed before completion of hydro tests and any piping rework to avert possible physical damage to the cables.

E. All terminations and electrical connections shall be waterproofed to prevent moisture tracking electrical faults.

F. Self-regulating heaters shall be attached to metal pipe with adhesive backed glass fiber tape at 1-foot intervals. Self-regulating heaters shall be attached to non-metallic pipe with adhesive backed aluminum tape applied linearly over the heating cable.

G. MI cable shall be attached to the pipe with stainless steel tie wire at 1-foot intervals.

H. Vessel heating panels shall be attached to the vessel wall with adhesive backed aluminum tape.

I. NO HEAT TRANSFER CEMENT of any type shall be permitted.

J. Caution signs shall be installed at 10-foot intervals along the pipe or around the vessel

3.2 START UP/CHECK OUT

A. Upon completion of thermal insulation installation the heater cable shall be meggered to verify no damage has occurred. Tests on Polymer heating cables should use at least a 2,500 VDC megger and 500 VDC on mineral insulated cables. Do not use a megger with an excess of 2500 VDC for polymer heater cables and 1000 VDC for mineral insulated heater cables. Minimum acceptable readings should be 20 megohms per circuit, regardless of length.

B. Each circuit shall be energized and voltage and current measured and documented to verify the installation is properly functioning.

C. Temperature controls should be operated to verify functioning.

3.3 DOCUMENTATION

A. The installed system documentation shall include cables/controls/accessories installed on each circuit, electrical parameters and panelboard (breaker, control, alarm) circuit assignments.

B. Test documentation shall be maintained of installation and start up test values and turned over to plant maintenance upon completion of the project to assist in future maintenance.

END OF SECTION

SECTION 230548 – MECHANICAL VIBRATION CONTROLS AND SEISMIC RESTRAINTS

PART 1 – GENERAL

1.1 RELATED DOCUMENTS

A. Drawings and general provisions of the Contract, including General and Supplementary Conditions, Section 230500 and other Division 1 Specification Sections, apply to this Section.

B. LEED Building General Requirements: The Owner requires the Contractor to implement practices and procedures to meet the project's environmental performance goals, which include achieving LEED Certification. Specific project goals that may impact this area of work include: Use of recycled-content materials; use of locally-manufactured materials; use of low-emitting materials; construction waste recycling; and the implementation of a construction indoor air quality management plan. The Contractor shall ensure that the requirements related to these goals, as defined in the sections below, are implemented to the fullest extent. Substitutions, or other changes to the work proposed by the Contractor or their Subcontractors, shall not be allowed if such changes compromise the stated LEED Building Performance Criteria.

1. Comply with LEED (Leadership in Energy and Environmental Design) Green Building Rating System BD+C, Version 3.

1.2 WORK INCLUDED

A. Furnish and install all necessary vibration isolation materials to eliminate excessive noise and vibration from all building mechanical systems.

B. Seismic restraints for all systems shall be installed in accordance with:

1.	Connecticut Building Code	IBC 2006
2.	Seismic design category	See Structural Drawings
3.	Building I_p (Importance Factor)	See Structural Drawings
4.	All Life safety systems	Importance Factor = 1.5
5.	Emergency electrical	Importance Factor = 1.5
6.	Hazardous systems	Importance Factor = 1.5
a.	Oil piping	Importance Factor = 1.5
b.	Gas piping	Importance Factor = 1.5
c.	Gas Vents	Importance Factor = 1.5
7.	HVAC	
a.	All smoke exhaust systems	Importance Factor = 1.5
b.	All stair pressurization systems	Importance Factor = 1.5
c.	Steam system	Importance Factor = 1.5

d.	Condensate system	Importance Factor = 1.5
e.	Snow melting piping system	Importance Factor = 1.0
f.	Heat recovery piping system	Importance Factor = 1.0
g.	Hospital ductwork	Importance Factor = 1.5

8. Plumbing systems

a.	Medical gas	Importance Factor = 1.5
b.	Laboratory gases	Importance Factor = 1.5
c.	Nitrogen piping system	Importance Factor = 1.5
d.	Compressed air system	Importance Factor = 1.5
e.	High Purity water system	Importance Factor = 1.5
f.	Pneumatic gases	Importance Factor = 1.5
g.	Domestic water system	Importance Factor = 1.5
h.	Non Potable water system	Importance Factor = 1.0
i.	Gray water system	Importance Factor = 1.0
j.	Waste and vent system	Importance Factor = 1.0
k.	Laboratory waste and vent	Importance Factor = 1.5
l.	Acid waste and vent	Importance Factor = 1.5
m.	Storm Drain system	Importance Factor = 1.0

9. Other systems

a.	All other ductwork systems	Importance Factor = 1.5
b.	All other piping systems	Importance Factor = 1.5
c.	All other electrical systems	Importance Factor = 1.5
d.	All other plumbing systems	Importance Factor = 1.5
e.	Control conduits	Importance Factor = 1.5

C. Piping Types

1. High deformability piping:

   a. Welded steel
   b. Welded stainless steel
   c. Socket welded steel
   d. Grooved steel that is ASME B31.1
   e. Braised copper
   f. Grooved copper

2. Limited-deformability

   a. Threaded Steel
   b. Grooved steel that is not ASME B31.1
   c. Soldered copper

3. Low-deformability

   a. PVC

b. Cast iron
c. Glass
d. Non-ductile plastic

D. All trapeze supported Items weighing 10 Lbs per foot or greater shall be braced. This weight shall include all pipes and conduits filled with water.

E. Secure all permits and local/state approval for the installation of all components included under this Section.

F. The work in this Section shall include the following:

1. Vibration isolation elements for equipment.
2. Equipment isolation bases.
3. Piping flexible connectors.
4. Seismic restraints for isolated equipment.
5. Seismic restraints for non-isolated equipment.
6. Seismic restraints for ductwork
7. Seismic restraints for piping
8. Certification of seismic restraint designs and installation supervision.
9. Certification of seismic attachment of housekeeping pads.

G. Coordinate closely with Hangers and Supports, Pipe Expansion and Structural documents.

1.3 RELATED SECTIONS

A. Examine all drawings and criteria sheets and all other Sections of the Specifications for requirements which affect work under this Section whether or not such work is specifically mentioned in this Section.

B. Refer to Section 230516 – Pipe Expansion.

C. Refer to Section 230529 – Hangers and Supports.

D. Section 017419 "Construction Waste Management and Disposal" for requirements related to construction waste management and disposal at the project site.

E. Section 018113 "VOC Limits for Adhesives, Sealants, Paints and Coatings" for restrictions of VOC in adhesives, sealants, paints and coatings.

F. Section 018119 "Construction Indoor Air Quality (IAQ) Management" for requirements during construction for indoor-air-quality management.

1.4 REFERENCES

A. Applicable provisions of the following Codes and Trade Standard Publications shall apply to the work of this Section, and are hereby incorporated into, and made a part of the Contract Documents.

B. Material standards shall be as specified or detailed hereinafter and as follows:

1. NEBB– Procedural Standards for Measuring Sound and Vibration; National Environmental Balancing Bureau.
2. NEBB– Sound and Vibration in Environmental Systems; National Environmental Balancing Bureau.
3. SMACNA – Guidelines for Seismic Restraint of Mechanical Systems.
4. ASHRAE Guidelines – HVAC Applications; Chapter– Sound and Vibration Control, Chapter – Seismic Restraint Design, Latest Edition.
5. ASCE Standard 7 Minimum Design Loads for Buildings and Other Structures

1.5 SUBMITTALS

A. See Section 230500 and General Conditions for additional requirements.

B. The Vibration Isolation Submittal shall include descriptive data for all products and materials including the following:

1. Product Descriptions

a. A complete description of products to be supplied, including product data, dimensions, specifications and installation instructions.

b. An itemized list of isolated and non-isolated equipment. Detailed schedule and selection data for each vibration isolator and seismic restraint supporting equipment, including:

1) Equipment identification mark
2) Isolator type
3) Actual load
4) Static deflection expected under actual load
5) Specified minimum static deflection
6) Additional deflection-to-solid under load
7) Ratio of spring height under load to spring diameter
8) Base type
9) Seismic restraint type

c. Steel rails, steel base frames, and concrete inertia bases showing all steel work, reinforcing, vibration isolator mounting attachment method, and location of equipment attachment bolts.

2. Show equipment base construction for all equipment, including dimensions, structural member sizes and support point locations.

3. Indicate isolation devices selected with complete dimensional and deflection data.

4. Show all methods of suspension and support for ceiling hung equipment.

5. Detail methods of isolation for ducts and pipes piercing walls and slabs.

6. Provide specific details of seismic restraints and anchors, including number, size and locations for each piece of equipment.

7. Provide special details necessary to convey complete understanding of the work to be performed.

C. Seismic Analysis and Certification submittals shall include the following:

1. Seismic restraint calculations must be provided for all connections of equipment to the structure.

2. Calculations to support seismic restraint designs shall be stamped by a registered Professional Engineer.

3. Analysis must indicate calculated dead loads, derived loads, and materials utilized for connections to equipment and structure. Analysis must detail anchoring methods, bolt diameter, embedment and weld length.

4. A seismic design liability insurance certificate must accompany all submittals.

5. Coordinate all hangers and supports.

6. Provide Approved Agencies Certificate of Compliance meeting Seismic Category D for all components. Tests shall include anchorage, structural and on line capability from analytical or shaker test method.

a. Where the requirements of this specification cannot be met by any vendor, the contractor will submit a written summary indicating the lack of resources.

D. Submission of samples may be requested for each type of vibration isolation and seismic device. After approval, samples will be returned for installation at the job if requested. All costs associated with submission of samples shall be borne by the Contractor.

E. Provide seismic certifications for all equipment including, but not limited to:

1. Chiller
2. Air handling equipment
3. Fan coil units
4. Fans
5. VFDs
6. Motor control centers
7. Cooling towers
8. Pumps
9. Heat exchangers
10. Seismic joints

1.6 QUALITY ASSURANCE

A. All vibration isolators shall have calibration markings or some method to determine the actual deflection under the imposed load after installation and adjustment.

B. All isolators shall operate within the linear portion of their load versus deflection curves. Load versus deflection curves shall be furnished by the manufacturer and must be linear over a deflection range of at least 50% above the design deflection.

C. The theoretical vertical natural frequency for each support point, based upon load per isolator and isolator stiffness, shall not differ from the design objectives for the equipment as a whole by more than ±10%, and shall be non-resonant with equipment forcing frequencies or support structure natural frequencies.

D. All neoprene components shall have a shore hardness of 30 to 50 ±5%, after minimum aging of (20) days or equal oven aging.

E. Substitution of internally isolated and restrained equipment in lieu of the isolation and restraints specified in this Section is acceptable provided all conditions of this Section are met. The equipment manufacturer shall provide a letter of guarantee stating that the specified noise and vibration levels will be obtained and that the seismic restraints shall be in compliance with these specifications. All costs for converting to the specified external vibration isolation and/or restraints shall be borne by the equipment manufacturer/installing contractor should submissions or installations be found to be unacceptable pursuant to the intent of this specifications.

F. Should any rotating equipment cause excessive noise or vibration, the Contractor shall be responsible for rebalancing, realignment, or other remedial work required to reduce noise and vibration levels. Excessive is defined as exceeding the manufacturer's specifications for the unit in question.

G. Upon completion of the work, the Architect or Architect's representative shall inspect the installation and shall inform the Installing Contractor of any further work that must be completed. Make all adjustments as directed by the Architect that result from the final inspection. This work shall be done before vibration isolation systems are accepted.

H. Manufacturer Responsibility

1. Manufacturer of vibration and seismic control equipment shall have the following responsibilities:

a. Determine vibration isolation and seismic restraint sizes and locations.

b. Provide equipment vibration isolation and seismic restraints as scheduled or specified.

c. Guarantee specified isolation system deflections.

d. Provide installation instructions, drawings and field supervision to ensure proper installation and performance of systems.

e. Provide certification by a licensed engineer that all mounts and restraints meet the project requirements for seismic loading.

2. Substitution of internally isolated mechanical equipment in lieu of the specified isolation of this Section must be approved for individual equipment units and is acceptable only if above acceleration loads are certified in writing by the equipment manufacturer and stamped and sealed by a licensed Civil or Structural Engineer.

3. Licensed Engineers shall be licensed in the project state.

I. Contractor Responsibilities

1. The Contractor performing the work on equipment in the section shall have the following responsibilities.

a. Identify the components that are part of the Quality Assurance Plan.

1) All flammable, combustible and highly toxic piping and their associated mechanical systems.
2) All ductwork containing hazardous materials.
3) All equipment using combustible or toxic energy sources.

b. Identify all Special inspection and Testing.

c. List control procedures within the contractor's organization including methods and frequency of reporting and their distribution.

d. List personnel and their qualifications exercising control over the seismic aspects of the project.

2. Purchased and/or fabricated equipment must be designed to safely accept external forces of 1.8 g load in any direction for all rigidly supported equipment, piping and ductwork without failure and permanent displacement of the equipment. Resiliently supported equipment, piping and ductwork and Life safety equipment such as fire pumps, smoke exhaust fans, emergency generators and other life safety designated equipment must be capable of accepting external forces of up to 3.6 g in any direction without permanent displacement or failure of the equipment.

1.7 REGULATORY REQUIREMENTS

A. Conform to ASME B31.9 code for installation of piping system and ASTM F708 for design and installation of pipe hangers.

B. Welding Materials and Procedures: Conform to ASME (BPV IX) and applicable state labor regulations.

C. Provide certificate of compliance from authority having jurisdiction, indicating approval of welders.

1.8 DELIVERY, STORAGE AND HANDLING

A. All vibration control and SEISMIC restraint equipment shall be delivered in containers and shall be kept in a dry and protected area.

B. All exposed hangers, supports, etc. shall be given 2 coats of rust resistant paint of a color selected by the Architect prior to installation.

PART 2 – PRODUCTS

2.1 ISOLATORS AND RESTRAINTS – GENERAL

A. Acceptable Manufacturers subject to compliance to specifications.

1. Mason Industries (MI)
2. Amber/Booth (AB)
3. Kinetics Noise Control (KNC)
4. Vibration Eliminator Co. (VEC)
5. Vibration Mountings & Controls (VMC)

B. The Mechanical Contractor shall provide necessary vibration isolation materials to eliminate excessive noise and vibration from being transmitted from HVAC equipment to the occupied areas of the structure, and to serve as the basis for seismic restraint design for the entire HVAC system within the building. This includes all non-structural components such as, but not limited to, air handlers, fans, pumps, tanks, ductwork, piping, etc. (hereinafter called equipment).

C. Seismic restraints and vibration isolation types shall be capable of accepting, without failure, seismic forces determined in accordance with:

1. International Building Code
2. State/Country Codes
3. Local codes enforced at the specified project location.

D. Isolators and supports shall maintain the equipment in a captive position and not short circuit isolation during normal operating conditions. Isolators shall have provisions for bolting and/or welding to the structure.

E. All metal parts of vibration isolation units installed out-of-doors shall be cold dip galvanized, cadmium plated, or neoprene or PVC coated after fabrication. Galvanizing shall meet ASTM Salt Spray Test Standards and Federal Test Standard #14.

F. All base supported isolators shall have base plates with bolt holes for fastening the isolators to the support members.

G. Isolator types are scheduled to establish minimum standards. At the Contractor's option, laborsaving accessories can be an integral part of isolators supplied to provide initial lift of equipment to operating height, hold piping at fixed elevations during installation and initial system filling operations, and similar installation advantages. Accessories must not degrade the vibration isolation system.

H. Static deflection of isolators shall be as scheduled in this Section and as shown on the drawings. All static deflections stated are the minimum acceptable deflection under actual load. Isolators shall be selected for no less than 50% reserve deflection beyond actual operating conditions.

I. Attachment plates to be cast into housekeeping pads, concrete inserts, beam clamps, etc. that may be required for seismic compliance shall be provided by this Section.

J. Coordinate the size, location and special requirements of vibration isolation equipment and systems with other Trades. Coordinate plan dimensions with size of housekeeping pads.

2.2 SEISMIC RESTRAINT TYPES

A. Type I

1. Type I shall comply with general characteristics of spring isolator Type A with snubbing restraint in all directions capable of supporting equipment at fixed elevations during installation. Cast or aluminum housings, except ductile iron are not acceptable.

2. Type I seismic restraint shall be similar to Mason Industries Type SLRS.

B. Type II

1. Each corner or side of equipment base shall incorporate a seismic restraint snubber having a minimum of 5/8" thick resilient pad limit stop. Seismic snubbers shall be in accordance with manufacturer's recommendations.

2. Type II seismic restraints shall be similar to Mason Industries Type Z-1011 or Z-1225.

C. Type III

1. Type III shall be multiple metal cable or strut type with approved fastening devices to equipment and structure. System to be field bolted to deck or to overhead structural members using 2-sided beam clamps or appropriately designed inserts for concrete. All parts of the system including cables, excluding fasteners, are to be of a single supplier to ensure seismic compliance.

D. Type IV

1. Type IV shall have double deflection neoprene isolator (minimum 0.3") encased in ductile iron or steel casing.

2. Type IV seismic restraints shall be similar to Mason Industries Type BR, RBA or RCA.

E. Type V

1. Non-isolated equipment shall be field bolted or welded (powder shots not acceptable) to the structure as required to meet seismic forces. Bolt diameter, imbedment data and/or weld length must be shown in certified calculations.

2.3 VIBRATION ISOLATOR TYPES

A. Type A (Floor Spring and Neoprene)

1. The Type A spring isolator shall:

a. Have a minimum outside diameter to overall height of 0.8:1.

b. Have corrosion resistance where exposed to corrosive environment with:

1) Springs cadmium plated or electro-galvanized.
2) Hardware cadmium plated.
3) All other metal parts hot dip galvanized.

c. Have reserve deflection (from loaded to solid height) of 50% of rated deflection.

d. Have minimum 1/4" thick neoprene acoustical base pad on underside, unless designed otherwise.

e. Be designed and installed so that ends of springs remain parallel.

2. Type A isolator shall be similar to Mason Industries Type SLF.

Note: Must be used with Seismic Restraint II.

B. Type B (Floor Spring and Neoprene Travel Limited)

1. The Type B spring isolator shall be the same as Type A with the following additional features.

a. Built-in vertical limit stops with minimum 1/4" clearance under normal operation.

b. Tapped holes in top plate for bolting to equipment.

c. Capable of supporting equipment at fixed elevation during equipment installation. Installed and operating heights shall be identical.

d. Adjustable and removable spring pack with separate neoprene isolation pad.

2. Type B isolator shall be similar to Mason Industries Type SLR.

Note: This isolator must be bolted or welded to the structure.

C. Type C (Spring Hanger Rod Isolator)

1. Spring isolator (Type A) seated on a steel washer within a neoprene cup incorporating a rod isolation bushing.

2. Spring diameters and hanger box shall allow 30° of hanger rod movement.

3. When used on ductwork, provide eyebolts for attachment to duct straps.

4. Type C isolator shall be similar to Mason Industries Type 30 or W30.

Note: Must be used with Seismic Restraint III.

D. Type D

1. Same as Seismic Restraint Type IV.

E. Type E (Elastomer Hanger Rod Isolator)

1. Molded (minimum 1 3/4" thick) neoprene element with projecting bushing lining the rod clearance hole. Static deflection at rated load shall be minimum 0.035".

2. Steel retainer box encasing neoprene mounting capable of supporting equipment up to (4) times the rated capacity of the element.

3. Type E isolator shall be similar to Mason Industries Type HD.

Note: Must be used with Seismic Restraint III.

F. Type F (Combination Spring/Elastomer Hanger Rod Isolator)

1. Spring and neoprene elements in a steel retainer box with the features as described for Type C and Type E isolators.

2. Type F isolator shall be similar to Mason Industries Type 30N.

Note: Must be used with Seismic Restraint III.

G. Type G (Pad Type Elastomer Isolator)

1. 0.75" minimum thickness, 50 psi maximum loading, ribbed or waffled design.

2. Minimum 0.1" deflection.

3. 1/16" galvanized steel plate between multiple pad layers.

4. Provide load distribution plate where attachment to equipment bearing surface is less than 75% of the pad area.

5. Type G isolators shall be similar to Mason Industries Type Super W.

   Note: Bolting required for seismic compliance. Neoprene and duck washers and bushings shall be provided to prevent short circuiting.

H. Type H (Pad Type Elastomer Isolator)

1. Laminated cotton duck and neoprene, maximum loading 1000 psi, minimum 1/2" thick.

2. Provide load distribution plate where attachment to equipment bearing surface is less than 75% of the pad area.

3. Type H isolator shall be similar to Mason Industries Type HL.

   Note: Bolting required for seismic compliance. Neoprene and duck washers and bushings shall be provided to prevent short circuiting.

I. Type I (Thrust Restraints)

1. A spring element similar to Type A isolator shall be combined with steel angles, back-up plates, threaded rod, washers and nuts to produce a pair of devices capable of limiting movement of air handling equipment to 1/4".

2. Restraint shall be easily converted in the field from a compression type to tension type.

3. Unit shall be factory pre-compressed.

4. Thrust restraints shall be installed on all cabinet fan heads, axial or centrifugal fans and other equipment as scheduled.

5. Type I restraint shall be similar to Mason Industries Type WB.

J. Type J (Steel Rails)

1. Steel members of sufficient strength to prevent equipment flexure during operation.

2. Height saving brackets as required to reduce operating height.

3. Type J isolator shall be similar to Mason Industries Type ICS.

K. Type K (Pipe Anchors and Guides)

1. Acoustical pipe anchor or guide, consisting of a telescopic arrangement of (2) sizes of steel tubing separated by a minimum 1/2" thickness of Type H pad.

2. Vertical restraints shall be provided by a similar material arranged to prevent vertical travel in either direction (anchors only).

3. Allowable loads on isolation materials shall not exceed 500 psi, and the design shall be balanced for equal resistance in any direction.

4. Anchors and guides must be bolted or welded to meet seismic criteria.

5. Type K anchor shall be similar to Mason Industries Type ADA.

L. Type L (Isolated Clevis Hanger)

1. Combination clevis or rod roller hanger and a Type C, E, or F, isolation hanger.

2. System shall be pre-compressed to allow for rod insertion and standard leveling.

3. Type L hanger shall include Mason Industries Type CCB clevis brace.

2.4 EQUIPMENT BASES

A. All curbs and roof rails are to be bolted or welded to the building steel or concrete deck to attain acceleration criteria and shall be wind restrained for 110 mph wind loads.

B. Type B-1 (Integral Structural Steel Base)

1. The integral structural steel base shall be reinforced as required to prevent base flexure at equipment start-up and misalignment of driver and driven units. Centrifugal fan bases shall be complete with motor slide rails and shall be drilled for driver and driven units.

2. Height saving brackets shall be provided, as required, to reduce operating height and maintain 1" operating clearance under base.

3. Member depth shall be a minimum of 1/10 of the longest unsupported span.

4. Type B-1 equipment base shall be similar to Mason Industries Type M or WF.

Note: Must be used with Restraint I, II or IV.

C. Type B-2 (Concrete Inertia Base)

1. Concrete inertia base shall have rectangular structural concrete forms for floating foundations. Base for split-case pumps shall be large enough to support elbows.

The base depth shall be a minimum of 1/12 the longest span, but not less than 6" or greater than 14". Forms shall include concrete reinforcement consisting of 1/2" bars or angles welded in place on 6" centers both ways in a layer 1 1/2" above the bottom. Provide an additional top layer of reinforcing for all bases exceeding 10'-0" in one direction.

2. Isolators shall be set into pocket housings which are an integral part of the base construction and set at the proper height to maintain 1" clearance below the base. Base shall be furnished with templates for equipment attachment and anchor bolt sleeves.

3. Type B-2 equipment base shall be similar to Mason Industries Type K or KIPWF.

Note: Must be used with Restraint I, II or IV.

D. Type B-3 (Spring Roof Curb)

1. Curb mounted rooftop equipment shall be mounted on structural spring isolation curbs that bear directly on the roof support structure, and are flashed and waterproofed into the roof's membrane waterproofing system. Equipment manufacturer's curb shall not be used.

2. All spring locations shall have removable waterproof covers to allow for spring adjustment and/or removal. Springs shall be Type A.

3. Curbs shall be thermal and sound attenuating type utilizing standard 2" roof insulation supplied and installed by the Roofing Contractor.

4. Unit shall be provided with wood nailer and flashing.

5. Curbs shall meet all NRCA Standards.

6. Curbs shall include a means of incorporating a sound barrier package, Type SBC-3 consisting of (2) layers of waterproof sheetrock furnished and installed by others.

7. Curbs installed on pitched roofs shall be factory built to compensate for elevation changes.

8. Curbs shall be similar to Mason Industries Type RSC having a minimum 3" rated static deflection.

E. Type B-4 (Flashable Roof Rail System)

1. Rooftop fans, condensing units, air handlers, etc. shall be mounted on continuous support piers that combines equipment support and isolation into (1) assembly.

2. Rails shall incorporate Type A isolators which are adjustable, removable and interchangeable after equipment has been installed.

3. The system shall maintain the same installed and operating height with or without the equipment load.

4. The system shall have full plywood nailers on all (4) sides, designed to accept membrane waterproofing and shall be dry galvanized or plastic coated.

5. Unit to be supplied with flashing.

6. Roof rail shall be similar to Mason Industries Type R-7000 having a minimum 3" rated static deflection.

F. Type B-5 (Roof Rail Base)

1. Rails shall be constructed from structural steel angles sized as required to prevent flexure and misalignment under load.

2. Each rail shall be the full length of the supported equipment and be welded to a series of Type B isolators. Bolt-on angle cross ties at the ends and center shall form (1) rigid platform.

3. Roof rail shall be similar to Mason Industries Type TRSLR.

G. Type B-6 (Non-Isolated Roof Curb)

1. Non-isolated, curb mounted rooftop equipment shall be mounted on structural curbs that meet the acceleration criteria hereinbefore defined.
2. Curbs shall accept standard 2" roof insulation furnished and installed by the Roofing Contractor.

3. Non-isolated curbs shall be similar to Mason Industries Type RRC.

2.5 FLEXIBLE PIPE CONNECTOR

A. All flexible connectors shall be:

1. Installed on the equipment side of the shutoff valves, horizontal and parallel to equipment shafts whenever possible. All piping between the flexible connector and the equipment shall be independently supported off the equipment base.

2. Provided wherever rigidity supported piping is connected to equipment.

B. Type FC-1 (Elastomer Connector)

1. Manufactured of nylon tire cord and EPDM, both molded and cured in hydraulic presses. Neoprene used in lieu of EPDM is not acceptable.

2. Straight connectors to have (2) spheres reinforced with a molded in external ductile iron ring between the spheres.

3. Rated at 250 psig/170°F, dropping in a straight line to 170 psig/250°F for sizes 1 1/2" to 12".

4. All sizes shall employ control cables with neoprene end fittings isolated from anchor plates by means of 1/2" bridge bearing neoprene bushings.

5. Connectors shall be installed pre-extended per manufacturer's recommendations to prevent elongation under pressure.

6. Minimum safety factory of 3.6:1 at maximum pressure ratings shall be certified by test reports. Submittals shall also include (2) test reports by independent consultants showing minimum reduction of 20 dB in vibration accelerations and 10 dB in sound pressure levels at typical blade passage frequencies.

7. Connectors bolted to Victaulic type coupling or gage, butterfly or check valves to have a minimum 5/8" flange spacer installed between the connector and the coupling flange.

8. Connectors for pipe size 2" and smaller shall have threaded female union couplings on each end. Larger pipe sizes shall be fitted with flange couplings.

9. Type FC-1 flexible connector shall be similar to Mason Industries Super-Flex Type MFTNC or MFTFU.

C. Type FC-2 (Flexible Stainless Steel Hose)

1. Stainless steel hose and braid rated with 3:1 safety factor.

2. 2" and smaller with male nipples, 2 1/2" and larger with fixed steel flanges.

3. Lengths as follows:

Size		Length	Size		Length	Size		Length
1/2	x	9	2	x	14	8	x	22
3/4	x	10	2 1/2	x	13	10	x	26
1	x	11	3	x	14	12	x	28
1 1/4	x	12	4	x	15	14	x	30
1 1/2	x	13	5	x	19	16	x	32
			6	x	20			

4. Type FC-2 flexible connector shall be similar to Mason Industries Type BSS.

5. 250 PSIG working pressure.

D. Type FC-3 (Unbraided Exhaust Hose)

1. Low pressure stainless steel annularly corrugated with flanged ends.

2. Maximum temperature of 1500°F.

3. Lengths (in inches) as follows:

Size		Length	Size		Length
2 1/2	x	15	8	x	22
3	x	16	10	x	26
4	x	17	12	x	28
5	x	18	14	x	30
6	x	19	16	x	32

4. Type FC-3 flexible connector shall be Mason Industries Type SDL-RF or equal by approved manufacturer.

E. Type FC-4 (Bronze Braided Flexible Hose)

1. Bronze hose and braid rated with a minimum 3:1 safety factor (minimum 150 psi).

2. Copper tube ends.

3. Minimum lengths (in inches) as follows:

Size		Length	Size		Length	Size		Length
1/8	x	7 1/2	3/4	x	11 1/2	3	x	27
1/4	x	8 1/4	1	x	13	3 1/2	x	32
3/8	x	9	1 1/4	x	14 3/4	4	x	33
1/2	x	9 3/4	1 1/2	x	17	5	x	41
5/8	x	10	2	x	20	6	x	48
			2 1/2	x	24			

4. Type FC-4 flexible connector shall be similar to Mason Industries Type BFF.

5. 250 PSIG working pressure.

F. Seismic Expansion Joints

1. Provide seismic expansion joints on all ducts, piping, conduits or other systems crossing building expansion seismic joints. Provide these joints to allow for the movement in the XY&Z direction as indicated on the structural documents.

2. Pressure rated for 250 PSIG at maximum service temperature.

2.6 VIBRATION ISOLATION SCHEDULE

Equipment	HP	Mtng	On Grade ****	Above Grade

			Isol	Defl	Base	Restr	Isol	Defl	Base	Restr
Base Mounted Pumps	to 15 >15	Flr Flr	A A	1.0 1.5	B-2 B-2	II II	A A	1.5 2.0	B-2 B-2	I,II I,II
Axial Fans		Flr Clg	A&I	.75	B-1	II	A** F&I	See Guide	B-2	
In Line Pump		Clg	---	---	---	---	F	.30	---	III
Cabinet Type Fans & Packaged AHUs	To 1	Flr Clg	D ---	.50 ---	--- ---	IV ---	D	See Guide	--- ---	IV
Cabinet Type Fans & Packaged AHUs	>1	Flr Clg	A ---	1.0 ---	--- ---	II ---	A ** F	See Guide	--- ---	I,II III
Centrifugal Fans		Flr Clg	A ---	1.0 ---	B-1 ***	II ---	A** F	See Guide	B-2 ***	I,II III
Plenum Fan		Flr Clg	A ---	1.0 ---	B-1 ***	II ---	A** F	See Guide	B-2 ***	I,II III
Centrifugal Fans Arrangement 9 and 10		Flr Clg	A ---	1.0 ---	B-1 ---	II ---	A** F	See Guide	B-2	I,II III
Curb Mounted Equipment Other than AHU*****		Roof	---	---	---	---	---	---	B-6	V
Rooftop AHU >10 Ton		Roof	---	---	---	---	A	2.50	B-3	V
Unit/Cab. Heaters		Clg	---	---	--	--	E	.30	---	III
Cooling Towers			B	.75	B-1	II	B	4.5	B-1	II
Centrifugal Chiller			D	.5	---	IV	A	2"	---	II

* Used on vertically arranged units. Rails shall be 1.5 times the unit height.
** Substitute Type B isolator for Outdoor installations.
*** Substitute Type B-2 base for floor mounted Class 2 and 3 fans.
**** "On Grade" shall mean slab on grade only.
***** Fans in all units shall be isolated in accordance with chart.

Notes:

1. "Isol", "Base" and "Restr" columns indicate letter type as appears in the specs.

2. "Mtng" refers to method of support of equipment from the structure.

3. "See Guide" indicates isolator deflection selection to be taken from Deflection Guide below.

Deflection Guide	
RPM	MW Deflection
<400	3.5"
<600	2.5"
>600	1.5"

PART 3 – EXECUTION

3.1 GENERAL

A. Isolation and seismic restraint systems must be installed in strict accordance with the manufacturer's written instructions and submittal data. Vibration isolators shall not cause any change of position of equipment resulting in stress on equipment connections.

B. Design Criteria

1. All mechanical equipment such as pumps, heat pumps, fans, air handling units, etc. shall be isolated from the building structure by means of noise and vibration isolators.

2. All piping ductwork in mechanical equipment rooms and penthouses shall be isolated from the building structure by means of noise and vibration isolation hangers and provided with seismic restraints.

3. Piping and/or ductwork penetrations through floors and walls shall not be rigidly connected to the building structure. Provide sleeves with clearances around the outside, as recommended by the vibration materials manufacturer. All such penetrations shall be smokeproofed and firestopped in an approved manner as hereinbefore specified.

4. Generally, isolation facilities shall be designed to limit equipment room floor or roof loading to a maximum of 50 lbs./sq.ft. and vibration isolators shall be carefully and specifically selected for each piece of equipment.

5. Flexible duct connections at fans and air handling units shall have a minimum clear gap of 3" between metal collars. Flexible connectors exposed to the weather shall be weatherproofed by the Mechanical Contractor. Refer to the Sheet Metal Section of this specification for requirements of flexible duct connections.

6. Piping found to have water hammer or other objectionable vibration or noise which cannot be eliminated by proper grading or other natural means shall be braced, trapped, hung with vibration isolation hangers, equipped with air chambers or mechanical shock absorbers, flexible pipe connectors, or otherwise silenced using means as approved by the Architect.

7. Motor driven equipment which is to be isolated shall have motor mounted on the isolated equipment or shall have motor, equipment and drive mounted on a common base.

8. The Contractor shall not install any equipment, piping or conduit which makes rigid contact with the "building" unless permitted in this Specification. Building includes, but is not limited to, slabs, beams, columns, studs and walls.

9. Isolation mounting deflection shall be (minimum) as specified or scheduled on drawings.

10. Coordinate work with other trades to avoid rigid contact with the building.

Inform other trades following work, such as plastering or electrical, to avoid any contact which would reduce the vibration isolation.

11. Bring to the Architect's attention, prior to installation, any conflicts with other trades that will result in unavoidable rigid contact with equipment or piping as described herein, due to inadequate space or other unforeseen conditions. Corrective work necessitated by conflicts after installation shall be at the responsible contractor's expense.

12. Bring to the Architect's attention any discrepancies between the specifications and field conditions or changes required due to specific equipment selection, prior to installation. Corrective work necessitated by discrepancies after installation shall be at the contractor's expense.

13. Obtain inspection and approval of any installation to be covered or enclosed, prior to such closure.

14. Correct, at no additional cost, all installations which are deemed defective in workmanship or materials.

3.2 SPRING RISER SUPPORT SYSTEM

A. All vertical riser subjected to thermal expansion and/or construction as noted herein or on the documents, shall be supported by spring isolators and central anchors designed to insure loading within design limits at structural support points. The riser design must include the initial load, initial deflection, change in deflection, final load and change in load at all spring support locations. In order to minimize load changes, the initial spring deflection must be at least 4 times the thermal movement. The submittal must also include anchor loads when installed, cold filled, and at operating temperature. Include calculated pipe stress at end conditions and branch off locations as well as installation instruction. The submittals must be stamped and signed by a licensed Professional Engineer in the employ of the vibration vendor for at least five years.

B. Neutral resilient anchors close to the center of the run shall direct movement up and down. The anchors shall be capable of holding an upward force equal to the water weight when the system is drained. If one level cannot accommodate this force, anchors can be located on 2 or 3 adjacent floors. Resilient guides shall be spaced and sized properly depending on the pipe diameter.

C. Proper provision shall be made for seismic protection in seismic zones, as required.

D. The support spring mounts shall be specification Type A, anchors Type ADA, telescoping guides Type VSG, all similar to as manufactured by Mason Industries, Inc.

E. The isolation vendor shall provide and design all brackets at riser spring and anchor locations where standard clamps lack capacity or do not fit. The contractor must install and adjust all isolators under the supervision of the designing isolation vendor or his representative.

3.3 EQUIPMENT ISOLATION INSTALLATION

A. Equipment shall be isolated and restrained as per the vibration isolation schedule at the end of this Section.

B. Place floor mounted equipment on 4" high concrete housekeeping pads (unless detailed otherwise) properly doweled or expansion shielded to the deck to meet acceleration criteria. Anchor isolators and/or bases to housekeeping pads. Housekeeping pad concrete work shall be by Division 3. Housekeeping pads shall be sized to have a minimum of 6” of clearance all around the equipment or 12 bolt diameters, whichever is greater.

C. Additional Requirements

1. The minimum operating clearance under inertia bases shall be 2".

2. The minimum operating clearance under other bases shall be 1".

3. All bases shall be placed in position and supported temporarily by blocks or shims, as appropriate, prior to the installation of the equipment, isolators and restraints.

4. The isolators shall be installed without raising the equipment.

5. After the entire installation is complete, and under full operational load, the isolators shall be adjusted so that the load is transferred from the blocks to the isolators. The blocks shall be barely free and shall be removed. Remove all debris from beneath the equipment and verify that there are not short circuits of the isolation. The equipment shall be free in all directions.

6. Install equipment with flexibility in wiring.

3.4 PIPING AND DUCTWORK ISOLATION INSTALLATION

A. Isolate piping and ductwork outside shafts connected to rotating or reciprocating equipment and pressure reducing stations as follows:

1. All water piping in mechanical rooms.

2. Water piping within 50'-0" or 100 pipe diameters (whichever is greater) from connected isolated equipment.

B. The isolators shall be installed with the hanger box hung as closely as possible (without direct contact) to the structure.

C. The isolators shall be suspended from substantial structural members sized for a maximum deflection of L/360 at mid span, not from slab diaphragm, unless specifically permitted by the structural engineer.

D. Hanger rods shall not short circuit the hanger box.

E. Horizontal suspended water piping 1 1/4" to 2" shall be suspended by Type E isolators with a minimum 3/8" deflection. Water pipe larger than 2" shall be supported by Type F isolators with a minimum 0.75" deflection or same deflection as equipment for the first (3) locations nearest equipment, whichever is greater.

1. Type L isolators may be substituted for the above.

2. Horizontal floor and roof supported pipe shall be the same as above except use isolators Type D and Type A, respectively.

F. Ductwork shall be supported by Type C isolators with a minimum 0.75" deflection.

G. Vertical riser pipe supports, where required, under 2" diameter shall utilize Type H isolation.

H. Vertical riser guides, where required, shall avoid direct contact of piping with the building.

I. Pipe anchors or guides, where required, shall utilize Type K isolators.

J. Riser sway supports, where required, shall utilize (2) neoprene elements (Type G or H) to accommodate tension and compression forces.

K. Install Type FC-1 (FC-4 for refrigerant piping) flexible connectors at all connections of pipe to isolated equipment such as pumps, as shown on the drawings.

L. Install FC-2, FC-3 or FC-4 type connectors only at locations which exceed temperature or service (such as gas, fuel oil, or refrigerant) limitations of FC-1.

M. Emergency generator exhaust shall be provided with Type R isolators with a minimum deflection of 1" (larger deflections may be required). These isolators shall be closely coordinated with expansion and stress calculations and seismic restraints and movements.

3.5 SEISMIC RESTRAINTS INSTALLATION

A. All floor mounted equipment, whether isolated or not, shall be bolted or welded to the structure to allow for required acceleration. Bolt points, diameter of inserts, imbedment depth and weld length as shown on approved submittal drawings shall be followed in all respects.

B. All suspended equipment shall be 2-point or 4-point independently braced with Type III restraints, installed taut for non-isolated equipment, such as piping or ductwork and slack with 1/2" cable deflection for isolated equipment. Note: Stiffeners for support rods may be required, certifications shall clearly delineate when such stiffening is required or not.

1. Piping Bracing: Schedule 10 thru 40 welded, screwed, flanged or grooved; 40'-0" maximum transversely, 80'-0" maximum longitudinally, and within 4'-0" each change of direction. No- hub piping shall be at 10’-0” intervals or 40’-0” if 1.0 g couplings are used.

2. Ductwork Bracing: 30'-0" maximum, transversely, 60'-0" maximum longitudinally, and within 4'-0" of each change of direction.

C. Seismic restraints are not required:

1. Only when explicitly permitted by the code. These permitted exceptions shall be detailed clearly on the first page of the seismic submittal.

D. Seismic restraints are not required on the following (there are no exceptions for piping containing flammable or hazardous material or connected to life/safety equipment):

1. Piping in mechanical equipment rooms less than 1 1/4".

2. Other piping less than 2 1/2".

3. All rectangular ducts less than 6 sq.ft. in cross sectional areas.

4. All round ducts less than 28" diameter.

5. All pipe suspended by individual hangers 12" in length or less from the top of the pipe support to the bottom of the support for the hanger.

6. All top supported ducts suspended by hangers 12" or less in length from the top of the duct to the bottom of the support for the hanger.

E. Where base anchoring of equipment is insufficient to resist seismic forces, restraints such as Type III shall be located above the unit's center of gravity to resist "G" forces.

Note: Vertically mounted tanks and upblast tubular centrifugal fans may require this additional restraint.

F. For overhead supported equipment, overstress of the building structure must not occur. Bracing may occur from:

1. Upper flanges of structural beams.

2. Upper truss chords in bar joists.

3. Cast-in-place inserts or drilled and shielded inserts in concrete structures.

G. Chimneys and stacks passing through floors are to be bolted at each floor level or secured above and below each floor with riser clamps or approved vibration isolation systems with seismic restraints.

H. Chimneys and stacks running horizontally to be braced every 30 ft (9 m) with Type III restraining system.

I. Inspection

1. On completion of installation of all vibration isolation and seismic restraint devices herein specified, the local representative of the isolation materials manufacturer shall inspect the completed system and report in writing any installation errors, improperly selected isolation or restraint devices, or other faults that could affect the performance of the system. Contractor shall submit a report to the Architect, including the manufacturer's representative's final report, indicating all isolation reported as properly installed or requiring correction, and include a report by the Contractor on steps taken to properly complete the isolation work.

2. Provide all special inspections in accordance with IBC and as specified herein.

a. Continuous inspection: The full-time observation of work by an approved special inspector pursuant to IBC. The following pieces of equipment require these inspections:

1) All equipment using combustible or toxic energy sources.
2) All electric motors and motor control centers.
3) Reciprocating and rotating type machinery.
4) Pipe.
5) Tanks, heat exchangers & pressure vessels.
6) Ductwork.

b. Periodic inspection: Provide intermittent observation of work by an approved special inspector of the following pieces of equipment in compliance with IBC.

1) All smoke control systems during construction & prior to concealment for leakage testing.

2) Isolator units for seismic isolation system.

3) All flammable, combustible and highly toxic piping and their associated mechanical systems.

4) All ductwork containing hazardous materials.

c. After all inspections a written report shall be provided.

3.6 INSTALLATION INSTRUCTIONS

A. Adjust all base and piping isolators as required to prevent stress transfer to equipment.

B. Set steel bases for 1" clearance between housekeeping pad and base. Set concrete inertia bases for 2" clearance. Adjust equipment level.

C. Position equipment, structural base and concrete base on blocks or wedges at proper operating height.

D. Provide all equipment and provide operating load conditions before transferring base isolation loads to springs and removing wedges.

E. Install inertia bases of type and thickness, with isolators of type and static deflection indicated.

F. Provide isolators as specified and install in accordance with the manufacturers recommendations. Seismic restraints shall not be installed until isolators are adjusted and equipment height is finalized.

G. Provide forms for 4" high housekeeping pads under all floor mounted equipment, including those with inertia blocks. Provide necessary reinforcing.

H. Install equipment with flexibility in wiring connection.

I. Verify all installed isolators and mounting system permit equipment motion in all directions.

J. Adjust or provide additional resilient restraints to flexibly limit lateral motion to 1/4" during start-up of equipment.

K. Before start-up, clean out all foreign matter between bases and equipment to prevent short circuit.

L. Install flexible pipe connectors on pipe connected to equipment supported by vibration isolation. Hook up piping to equipment and mains with spool pieces. After completion of pressure testing but prior to start-up, remove spool pieces and install flexible pipe connectors. Identify spool pieces as to equipment served and either entering or leaving.

M. Provide seismic displacement joints for all piping, ductwork and conduits crossing building expansion joints or building seismic joints.

3.7 CERTIFICATION

A. Upon completion of installation of all vibration isolation devices and seismic restraints, the Mechanical Contractor shall hire an independent Seismic Professional Engineer to visit the site, inspect the completed project and certify in writing to the Architect that all systems are installed properly, or require correction.

END OF SECTION

SECTION 23 0553 – MECHANICAL IDENTIFICATION

PART 1 – GENERAL

1.1 RELATED DOCUMENTS

A. Drawings and general provisions of the Contract, including General and Supplementary Conditions, Section 230500 and other Division 1 Specification Sections, apply to this Section.

B. LEED Building General Requirements: The Owner requires the Contractor to implement practices and procedures to meet the project's environmental performance goals, which include achieving LEED Certification. Specific project goals that may impact this area of work include: Use of recycled-content materials; use of locally-manufactured materials; use of low-emitting materials; construction waste recycling; and the implementation of a construction indoor air quality management plan. The Contractor shall ensure that the requirements related to these goals, as defined in the sections below, are implemented to the fullest extent. Substitutions, or other changes to the work proposed by the Contractor or their Subcontractors, shall not be allowed if such changes compromise the stated LEED Building Performance Criteria.

1. Comply with LEED (Leadership in Energy and Environmental Design) Green Building Rating System BD+C, Version 3.

1.2 WORK INCLUDED

A. Furnish and install nameplates, valve tags, valve charts, stencils and pipe markers on all Mechanical equipment, piping and ductwork.

B. Provide nameplates with the unit number and service designation on all mechanical equipment.

C. Indicate all valve tag numbers on Record Drawings and submit framed under glass valve tag charts including valve service and location.

D. Install color coded ceiling tacks in acoustical tile ceilings or color coded tape on ceiling grid to identify location of equipment, valves and dampers that require regular maintenance or are part of a life safety system (fire dampers, smoke dampers, sprinkler valves or main isolation valves).

E. Provide underground plastic pipe markers 6 to 8 inches below finish grade, directly above buried pipes.

F. Provide manufactured pipe and ductwork identification stencils with flow arrows and service indicated. All backgrounds of the stencils shall be color coded with specific service designation

G. Prepare valve charts and frame under glass. All valves and the tag numbers shall be shown on the Record As-Built Drawings.

H. Provide valve computer data base to match chart.

I. Prepare and install exterior protected brass plaques indicating underground service entrances.

1.3 RELATED SECTIONS

A. Examine all drawings and criteria sheets and all other Sections of the Specifications for requirements which affect work under this Section whether or not such work is specifically mentioned in this Section.

B. Section 017419 "Construction Waste Management and Disposal" for requirements related to construction waste management and disposal at the project site.

C. Section 018113 "VOC Limits for Adhesives, Sealants, Paints and Coatings" for restrictions of VOC in adhesives, sealants, paints and coatings.

D. Section 018119 "Construction Indoor Air Quality (IAQ) Management" for requirements during construction for indoor-air-quality management.

1.4 REFERENCES

A. Applicable provisions of the following Codes and Trade Standard Publications shall apply to the work of this Section, and are hereby incorporated into, and made a part of the Contract Documents.

B. Material standards shall be as specified or detailed hereinafter and as follows:

1. ASME A 13.1 – Scheme for Identification of Piping Systems; The American Society of Mechanical Engineers.

1.5 SUBMITTALS

A. See Section 230500 and General Conditions for additional requirements.

B. Product Data: Submit product description including materials, attachment methods, color coding and lettering sizes.

1.6 QUALITY ASSURANCE

A. All materials, lettering and individual system color coding schemes shall be uniform and of one single manufacturer.

B. No identification shall be installed until all systems are complete and insulated.

C. All surfaces shall be cleaned.

D. No nametag or identification shall break or penetrate a surface used as a vapor barrier.

1.7 REGULATORY REQUIREMENTS

A. Conform to all local/state and NFPA requirements for color-coding or painting of systems, piping or equipment related to Life Safety or Fire Protection.

1.8 DELIVERY, STORAGE AND HANDLING

A. All identification systems shall be stored in sealed containers in suitable locations to keep the containers and contents dry and clean.

1.9 ENVIRONMENTAL REQUIREMENTS

A. All surfaces shall be cleaned and dry before applying any form of identification or tagging.

B. Consult with the manufacturer prior to installation for the proper tagging and identification procedure and materials to be used on exterior outdoor equipment.

PART 2 – PRODUCTS

2.1 GENERAL

A. Acceptable manufactures contingent on compliance with the specification.

1. Seton
2. Brady Corporation
3. Marning Services Incorporated

2.2 PIPE IDENTIFICATION AND VALVE TAGS

A. All piping, except that piping which is within inaccessible chases, shall be identified with semi-rigid plastic identification markers equal to Seton Setmark pipe markers.

1. Direction of flow arrows is to be included on each marker.

2. Each marker background shall be appropriately color coded with a clearly printed legend to identify the contents of the pipe in conformance with the "Scheme for the Identification of Piping Systems" (ASME A13.1-1981).

3. Setmark snap-around markers shall be used for overall diameters up to 6" and strap-around markers shall be used above 6" overall diameters.

4. Markers shall be located:

a. Adjacent to each valve
b. At each branch

c. At each cap for future
d. At each riser takeoff,
e. At each pipe passage through wall (each side)
f. At each pipe passage at 20’ – 0” intervals maximum.

5. Under ground pipe markers:

a. Provide detectable tape on all underground piping:
b. Labels shall be color coded and labeled the same as indoors.

B. Valve tags

1. All valves shall be designated by distinguishing numbers and letters carefully coordinated with a valve chart.

2. Valve tags shall be color coded 0.032” anodized aluminum tags, with engraved letters similar to Seton S Type 250-BL or approved equal.

a. HVAC tags shall be round 2” diameter, similar to Seton 15426.

b. Plumbing tags shall be square 2” x 2” similar to Seton 42769.

c. Fire Protection tags shall be square 2” x 2” similar to Seton 42769 RED.

d. Lettering shall be ¼” high for type service and ½” for valve number. Tag shall indicate service and valve number.

e. Each service shall be a different color.

3. Tag shall be attached to valves with chain similar to Seton No. 16 stainless steel jack chain.

4. Whenever a valve is above a hung ceiling, the valve tag shall be located immediately above the hung ceiling.

5. Provide a tag for every valve except:

a. Perimeter radiation shut-off valves that are located at the finned tube radiation element within the accessible (from the space) heating enclosure

C. Furnish a minimum of two (2) typed valve lists

1. Each framed under glass or Plexiglas. Each chart shall be enclosed in an approved 0.015” thick plastic closure for permanent protection.

2. Valve numbers shall correspond to those indicated on the Record Drawings and on the printed valve lists.

3. The printed list shall include the valve number, location and purpose of each valve.

4. It shall state other necessary information such as the required opening or closing of another valve when one valve is to be opened or closed.

5. Printed framed valve lists shall be displayed in each Mechanical Room or in a location designated by the Owner.

D. Valve data base.

1. Provide a valve data base for all valves to operate on the building computer.

2. Every valve shall include:

a. Tag Number
b. Service (Hot water, Chilled water, Sprinkler, etc.)
c. Size
d. Operation
e. Location
f. Manufacture
g. Model number
h. Submittal reference

2.3 DUCTWORK IDENTIFICATION

A. All ductwork (supply, return, exhaust, etc.) serving multiple spaces or floors shall be identified with directional flow arrows and unit identification numbers (AHU-1, EX-1, etc.) on the side of each duct (or bottom if abutting other systems or obstructions).

B. All flow arrows and labels shall be similar to Seton Name Plate Company vinyl labels or stencil painted.

C. The kitchen hood exhaust system shall also have identified access doors with numbers of specific doors identified on the Record As-Built Drawings.

D. All duct access doors.

2.4 EQUIPMENT NAMEPLATES

A. Equipment nameplates shall be 3” x 6” long, 0.02” aluminum with a black enamel background with engraved natural aluminum letters similar to Seton Style 2065-20. Nameplate shall have pressure sensitive taped backing.

B. The nameplate shall contain the unit or equipment designation (“AHU” for air handling unit, “HP” for heat pump, “P” for circulating pump, etc.), unit number and area or system served.

C. Nameplates for exterior equipment shall be applied with waterproof adhesive.

2.5 UTILITY ENTRANCE DESIGNATIONS

A. Provide a brass wall plaque, minimum 0.020" thickness, secured to the exterior wall just above the grade line for all buried service entrances or exits. Samples are: Water Service Below; Gas Service Below; Sanitary Sewer Below; Storm Sewer Below; Irrigation Water Below; etc.

2.6 CEILING TACKS OR TAPE

A. Provide steel color coded ¾ inch diameter ceiling tacks in acoustical tile ceilings or color coded tape applied to ceiling grid to locate equipment, valves or dampers that require regular maintenance or are part of a Life Safety System.

B. The tacks or tapes shall be color codes as follows (coordinate with Owner):

1. Yellow – HVAC
2. Red – Life Safety (fire dampers, sprinkler valves, etc.)
3. Green - Plumbing Valves.
4. Blue – Heating/Cooling Valves.

PART 3 – EXECUTION

3.1 PREPARATION

A. All surfaces shall be cleaned and insulated (if applicable) prior to installing any identification.

B. Exterior surfaces of outdoor equipment shall be dry and prepared to accept the specified identification.

3.2 INSTALLATION

A. Install nameplates with corrosive-resistant mechanical fasteners, or adhesive. Apply with sufficient adhesive to ensure permanent adhesion. Seal with clear lacquer.

B. Install valve tags with chain.

C. Install duct markers in accordance with manufacturer's instructions.

D. Install plastic pipe markers in accordance with manufacturer's Instructions.

E. Install plastic tape markers complete around pipe in accordance with manufacturer's instructions.

F. Install underground plastic pipe markers 6 to 8 inches below finished grade, directly above buried pipe.

G. Identify air handling units, pumps, boilers, domestic hot water heaters, fire pumps, heat transfer equipment tanks, water treatment devices, etc. with plastic nameplates. Small devices, such as in-line pumps, may be identified with tags.

H. Identify control panels and major control components outside panels with plastic nameplates.

I. Install detector tape on all under ground services in accordance with the manufactures recommendations.

J. Identify thermostats relating to air handling equipment serving multiple spaces.

K. Identify valves in main and branch piping with valve tags.

L. Tag automatic controls, instruments and relays. Key to control schematic.

M. Identify piping, concealed or exposed, with pipe markers or where buried using plastic tape pipe markers. Use tags on piping 3/4 inch diameter and smaller. Identify service, flow direction and pressure. Install in clear view and align with axis of piping. Locate identification not to exceed 20 feet on straight runs including risers and drops, adjacent to each valve and Tee, at each side of penetration of structure or enclosure, and at each obstruction.

N. Identify ductwork with plastic nameplates and flow arrows. Identify with air handling unit or fan identification number and area served. Locate identification at air handling unit or fan, at each side of penetration of structure or enclosure, and at each obstruction.

END OF SECTION 230553

SECTION 23 0584 – THROUGH-PENETRATION FIRESTOP SYSTEMS

PART 1 – GENERAL

1.1 RELATED DOCUMENTS

A. Drawings and general provisions of the Contract, including General and Supplementary Conditions, Section 230500 and Division 1 Specification Sections, apply to this Section.

B. LEED Building General Requirements: The Owner requires the Contractor to implement practices and procedures to meet the project's environmental performance goals, which include achieving LEED Certification. Specific project goals that may impact this area of work include: Use of recycled-content materials; use of locally-manufactured materials; use of low-emitting materials; construction waste recycling; and the implementation of a construction indoor air quality management plan. The Contractor shall ensure that the requirements related to these goals, as defined in the sections below, are implemented to the fullest extent. Substitutions, or other changes to the work proposed by the Contractor or their Subcontractors, shall not be allowed if such changes compromise the stated LEED Building Performance Criteria.

1. Comply with LEED (Leadership in Energy and Environmental Design) Green Building Rating System BD+C, Version 3.

1.2 WORK INCLUDED

A. Through-penetration firestop systems for penetrations through the following fire-resistance-rated assemblies, including both empty openings and openings containing penetrating items:

1. Floors
2. Roofs
3. Walls and partitions
4. Smoke barriers
5. Construction enclosing compartmentalized areas.
6. Other rated assemblies.

1.3 RELATED SECTIONS

A. Examine all drawings and criteria sheets and all other Sections of the Specifications for requirements which affect work under this Section whether or not such work is specifically mentioned in this Section.

B. Section 017419 "Construction Waste Management and Disposal" for requirements related to construction waste management and disposal at the project site.

C. Section 018113 "VOC Limits for Adhesives, Sealants, Paints and Coatings" for restrictions of VOC in adhesives, sealants, paints and coatings.

D. Section 018119 “Construction Indoor Air Quality (IAQ) Management” for requirements during construction for indoor-air-quality management.

1.4 REFERENCES

A. American Society for Testing and Materials Standards (ASTM):

1. ASTM E84: Standard Test Method for Surface Burning Characteristics of Building Materials

2. ASTM E814: Standard Test Methods for Fire Tests of Through-Penetration Firestops

3. ASTM E119: Standard Test Methods for Fire Tests of Building Construction Materials

4. ASTM E1399: Standard Test Methods for Cyclic Movement and Measuring of Joint Systems

5. ASTM E1725: Standard Test Methods for Fire Tests of Fire-Resistive Barrier Systems of Electrical Systems Components

6. ASTM E1966: Standard Test Methods for Fire Tests of Joints

B. Underwriters Laboratories, Inc. (UL):

1. UL 723 Surface Burning Characteristics of Building Materials

2. UL 1479 Fire Tests of Through-Penetration Firestops, including optional air leak test

3. UL 2079 Fire Test of Building Joint Firestop systems

4. UL Fire Resistance Directory (Component Listing Test Criterion)

C. National Fire Protection Agency (NFPA)

1. NFPA 80 Standard Fire Door and Window Assembly Tolerances

2. NFPA 252 Standard Fire Test for Fire Rated Doors (not specified for positive or negative furnace test pressure)

3. NFPA 257 Standard Fire Test for Fire Rated Windows (not specified for positive or negative furnace test pressure)

4. NFPA 101 Life Safety Code

5. NEC 70 National Electrical Code

1.5 PERFORMANCE REQUIREMENTS

A. General: For the following constructions, provide through-penetration firestop systems that are produced and installed to resist spread of fire according to requirements indicated, resist passage of smoke and other gases, and maintain original fire-resistance rating of assembly penetrated.

1. Fire-resistance-rated load-bearing walls, including partitions, with fire-protection-rated openings.

2. Fire-resistance-rated non-load-bearing walls, including partitions, with fire-protection-rated openings.

3. Fire-resistance-rated floor assemblies.

4. Fire-resistance-rated roof assemblies.

B. F-Rated Systems: Provide through-penetration firestop systems with F-ratings indicated, as determined per ASTM E 814, but not less than that equaling or exceeding fire-resistance rating of constructions penetrated.

C. T-Rated Systems: For the following conditions, provide through-penetration firestop systems with T-ratings indicated, as well as F-ratings, as determined per ASTM E 814, where systems protect penetrating items exposed to potential contact with adjacent materials in occupiable floor areas.

1. Penetrations located outside wall cavities.

2. Penetrations located outside fire-resistive shaft enclosures.

3. Penetrations located in construction containing fire-protection rated openings.

4. Penetrating items larger than 4-inch diameter normal pipe or 16 sq. in. in overall cross-sectional area.

D. For through-penetration firestop systems exposed to view, traffic, moisture, and physical damage, provide product that after curing do not deteriorate when exposed to these conditions both during and after construction.

1. For piping penetrations for plumbing and wet pipe sprinkler systems, provide moisture-resistant through-penetration firestop systems.

2. For floor penetrations with annular spaces exceeding 4 inches in width and exposed to possible loading and traffic, provide firestop systems capable of supporting floor loads involved either by installing floor plates or by other means.

3. For penetrations involving insulated piping, provide through-penetration firestop systems not requiring removal of insulation.

E. For through-penetration firestop systems exposed to view, provide products with flame-spread ratings of less than 25 and smoke-development ratings of less than 50, as determined per ASTM E 84.

1.6 SUBMITTALS

A. See Section 230500 and General Conditions for additional requirements.

B. Product Data: For each type through-penetration firestop system product indicated.

C. Shop Drawings: For each through-penetration firestop system show each kind of construction condition penetrated, relationships to adjoining construction, and kind of penetrating items. Include firestop design designation of testing and inspecting agency acceptable to authorities having, jurisdiction that evidences compliance with requirements for each condition indicated.

1. Submit documentation, including illustrations, from a qualified testing and inspecting agency that is applicable to each through-penetration firestop system configuration for construction and penetrating items.

2. Where Project conditions require modification of qualified testing and inspecting agency's illustration to suit a particular through-penetration firestop condition, submit illustration, with modifications marked, approved by through-penetration firestop system manufacturer's fire-protection engineer.

D. Submit complete plans indicating clearly where all seals are located and the type of seal to be used at that location

E. Qualification Data: For firms and persons specified to demonstrate their capabilities and experience. Include lists of completed projects with project names and addresses, names and addresses of architects and owners, and other information specified.

F. Product Certificates: Signed by manufacturers of through-penetration firestop system products certifying that products furnished comply with requirements.

G. Product Test Reports: From a qualified testing agency indicating through-penetration firestop system complies with requirements, based on comprehensive testing of current products.

1.7 QUALITY ASSURANCE

A. Installer Qualifications: An experienced installer who has completed through-penetration firestop systems similar in material, design, and extent to that indicated for this Project and whose work has resulted in construction with a record of successful in-service performance.

B. Source Limitations: Obtain through-penetration firestop systems, for each kind of penetration and construction condition indicated, from a single manufacturer.

C. Fire-Test-Response Characteristics: Provide through-penetration firestop systems that comply with the following requirements and those specified in "Performance Requirements" Article:

1. Through-Penetration Firestop Systems tests are performed by a qualified testing and inspecting agency. A qualified testing and inspecting agency is UL, ITS, or another agency performing testing and follow-up inspection services for firestop systems acceptable to authorities having jurisdiction.

2. Through-penetration firestop systems are identical to those tested per ASTM E 814. Provide rated systems complying with the following requirements:

a. Through-penetration firestop system products hear classification marking of qualified testing and inspecting agency.

b. Through-penetration firestop systems correspond to those indicated by reference to through-penetration firestop system designations listed by the following:

1) UL in "Fire Resistance Directory."
2) ITS in "Directory of Listed Products."

1.8 DELIVERY, STORAGE, AND HANDLING

A. Deliver through-penetration firestop system products to Project site in original, unopened containers or packages with intact and legible manufacturers' labels identifying product and manufacturer, date of manufacture; lot number; shelf life, if applicable, qualified testing and inspecting agency's classification marking applicable to Project; curing time; and mixing instructions for multi-component materials.

B. Store and handle materials for through-penetration firestop systems to prevent their deterioration or damage due to moisture, temperature changes, contaminants, or other causes.

1.9 PROJECT CONDITIONS

A. Environmental Limitations: Do not install through-penetration fires top systems when ambient or substrate temperatures are outside limits permitted by through penetration firestop system manufacturers or when substrates are wet due to rain, frost, condensation, or other causes.

B. Ventilate through-penetration firestop systems per manufacturer's written instructions by natural means or, where this is inadequate, forced-air circulation.

1.10 COORDINATION

A. Coordinate construction of openings and penetrating items to ensure that through-penetration firestop systems are installed according to specified requirements.

B. Coordinate sizing of sleeves, openings, core-drilled holes, or cut openings to accommodate through-penetration firestop systems.

C. Notify Owner's inspecting agency at least seven days in advance of through-penetration firestop system installations; confirm dates and times on days preceding each series of installations.

D. Do not cover up through-penetration firestop system installations that will become concealed behind other construction until Owner's inspecting agency and building inspector, if required by authorities having jurisdiction, have examined each installation.

PART 2 – PRODUCTS

2.1 MANUFACTURERS

A. Acceptable manufacturers subject to compliance with the specifications shall be one of following:

1. A/D Fire Protection Systems, Inc.
2. Hilti Construction Chemicals, Inc.
3. Nelson Firestop Products
4. RectorSeal Corporation (The)
5. Specified Technologies Inc.
6. 3M Fire Protection Products
7. Tremco
8. United Stated Gypsum Company

2.2 FIRESTOPPING GENERAL

A. Compatibility: Provide through-penetration firestop systems that are compatible with one another, with the substrates forming openings, and with the items, if any, penetrating through-penetration firestop systems, under conditions of service and application, as demonstrated by through-penetration firestop system manufacturer based on testing and fired experience.

B. Accessories: Provide components for each through-penetration firestop system that are needed to install fill materials and to comply with "Performance Requirements" Article. Use only components specified by through-penetration firestop system manufacturer and approved by the qualified testing and inspecting agency for firestop systems indicated. Accessories include, but are not limited to, the following items:

1. Permanent forming/damming/backing materials, including the following:

   a. Slag-/rock-wool-fire insulation.

   b. Sealants used in combination with other forming/damming/backing materials to prevent leakage of fill materials in liquid state.

c. Fire-rated form board

2. Temporary forming materials

3. Substrate primers

4. Collars

5. Steel sleeves

2.3 MIXING

A. For those products requiring mixing before application, comply with through-penetration firestop system manufacturer's written instructions for accurate proportioning of materials, water (if required), type of mixing equipment, selection of mixer speeds mixing containers, mixing time, and other items or procedures needed to produce products of uniform quality with optimum performance characteristics for application indicated.

PART 3 – EXECUTION

3.1 EXAMINATION

A. Examine substrates and conditions, with Installer present, for compliance with requirements for opening configurations, penetrating items, substrates, and other conditions affecting performance.

B. Proceed with installation only after unsatisfactory conditions have been corrected.

3.2 PREPARATION

A. Surface Cleaning: Clean out openings immediately before installing through-penetration firestop systems to comply with written recommendations of firestop systems manufacturer and the following requirements:

1. Remove from surfaces of openings substrates and from penetrating items foreign materials that could interfere with adhesion of through-penetration firestop systems.

2. Clean opening substrates and penetrating items to produce clean, sound surfaces capable of developing optimum bond with through-penetration firestop systems. Remove loose particles remaining from cleaning operation.

3. Remove laitance and form-release agents from concrete.

B. Priming: Prime substrates where recommended in writing by through-penetration firestop system manufacturer using that manufacturer's recommended products and methods. Confine primers to areas of bond; do not allow spillage and migration onto exposed surfaces.

C. Masking Tape: Use masking tape to prevent through-penetration firestop systems from contacting adjoining surfaces that will remain exposed on completion of Work and that would otherwise be permanently stained or damaged by such contactor by cleaning methods used to remove smears from firestop systems materials. Remove tape as soon as possible without disturbing firestop system's seal with substrates.

3.3 THROUGH-PENETRATION FIRESTOP SYSTEM INSTALLATION

A. General: Install through-penetration firestop systems to comply with "Performance Requirements" Article and firestop system manufacturer's written installation instructions and published drawings for products and applications indicated.

B. Install forming/damming/backing materials and other accessories of types required to support fill materials during their application and in the position needed to produce cross-sectional shapes and depths required to achieve fire ratings indicated.

1. After installing fill materials, remove combustible forming materials and other accessories not indicated as permanent components of firestop systems.

C. Install fill materials for firestop systems by proven techniques to produce the following results:

1. Fill voids and cavities formed by openings, forming materials, accessories, and penetrating items as required to achieve fire-resistance ratings indicated.

2. Apply materials so they contact and adhere to substrates formed by openings and penetrating items.

3. For fill materials that will remain exposed after completing Work, finish to produce smooth, uniform surfaces that are flush with adjoining finishes.

3.4 FIELD-QUALITY CONTROL

A. Inspecting Agency: Owner will engage a qualified independent inspecting agency to inspect through-penetration firestop systems and to prepare test reports.

1. Inspecting agency will state in each report whether inspected through-penetration firestop systems comply with or deviate from requirements.

B. Proceed with enclosing through-penetration firestop systems with other construction only after inspection reports are issued.

C. Where deficiencies are found, repair or replace through-penetration firestop systems so they comply with requirements.

3.5 IDENTIFICATION

A. Identify through-penetration firestop systems with pressure-sensitive, self-adhesive, preprinted vinyl labels. Attach labels permanently to surfaces of penetrated construction on both sides of each firestop system installation where labels will be

visible to anyone seeking to remove penetrating items or firestop systems. Include the following information on labels.

1. The words: "Warning-Through-Penetration Firestop System-Do Not Disturb. Notify Building Management of Any Damage."
2. Contractor's name, address, and phone number.
3. Through-penetration firestop systems designation of applicable testing and inspecting agency.
4. Date of installation.
5. Through-penetration firestop systems manufacturer's name.
6. Installer's name.

3.6 CLEANING AND PROTECTION

A. Clean off excess fill materials adjacent to openings as Work progresses by methods and with cleaning materials that are approved in writing by through-penetration firestop system manufacturers and that do not damage materials in which openings occur.

B. Provide final protection and maintain conditions during and after installation that ensure through-penetration firestop systems are without damage or deterioration at time of Substantial Completion. If despite such protection, damage or deterioration occurs, cut out and remove damaged or deteriorated through-penetration firestop systems immediately and install new materials to produce through-penetration firestop systems complying with specified requirements.

END OF SECTION

SECTION 23 0593 – TESTING, ADJUSTING AND BALANCING

PART 1 - GENERAL

1.1 RELATED DOCUMENTS

A. Drawings and general provisions of the Contract, including General and Supplementary Conditions and other Division 1 Specification Sections, apply to this Section.

B. LEED Building General Requirements: The Owner requires the Contractor to implement practices and procedures to meet the project's environmental performance goals, which include achieving LEED Certification. Specific project goals that may impact this area of work include: Use of recycled-content materials; use of locally-manufactured materials; use of low-emitting materials; construction waste recycling; and the implementation of a construction indoor air quality management plan. The Contractor shall ensure that the requirements related to these goals, as defined in the sections below, are implemented to the fullest extent. Substitutions, or other changes to the work proposed by the Contractor or their Subcontractors, shall not be allowed if such changes compromise the stated LEED Building Performance Criteria.

1. Comply with LEED (Leadership in Energy and Environmental Design) Green Building Rating System BD+C, Version 3.

1.2 WORK INCLUDED

A. Provide all labor, instruments and materials necessary to completely test, adjust and balance all HVAC systems and equipment installed under this contract.

B. All instruments shall be newly calibrated for this specific project.

1.3 RELATED SECTIONS

A. Examine all drawings and criteria sheets and all other Sections of the Specifications for requirements which affect work under this Section whether or not such work is specifically mentioned in this Section.

B. Section 017419 "Construction Waste Management and Disposal" for requirements related to construction waste management and disposal at the project site.

C. Section 018113 "VOC Limits for Adhesives, Sealants, Paints and Coatings" for restrictions of VOC in adhesives, sealants, paints and coatings.

D. Section 018119 "Construction Indoor Air Quality (IAQ) Management" for requirements during construction for indoor-air-quality management.

1.4 REFERENCES

A. Applicable provisions of the following Codes and Trade Standard Publications shall apply to the work of this Section, and are hereby incorporated into, and made a part of the Contract Documents.

B. Material standards shall be as specified or detailed hereinafter and as follows:

1. AABC MN-1 – National Standard for Testing and Balancing Heating, Ventilating and Air Conditioning Systems.

2. ASHRAE 111 – Practices for Measurement, Testing, Adjusting and Balancing of Building Heating, Ventilation, Air-Conditioning and Refrigeration Systems.

1.5 SYSTEM DESCRIPTION

A. Provide under this contract the services of an independent test and balance firm that specializes in testing and balancing of HVAC systems. The following services shall be provided:

1. Balance Plan Check and Review: Review the design documents prior to commencing balancing. Submit any noted questions or discrepancies in writing to the Architect.

2. On-going job site inspections of equipment, controls and metering devices during construction to verify conformance with design specifications, manufacturer's installation instructions.

3. Air System Balance

4. Hydronic System Balance

5. Control Systems Verification

6. Special System Testing and Verification

a. Duct leakage testing
b. Sound and vibration testing
c. Cooling tower testing

7. System Performance Verification

8. Opposite Season Test

1.6 SUBMITTALS

A. See Section 230500 – Submittals, for submittal procedures.

B. Submit name of testing, adjusting and balancing contractor for approval within 30 days after award of Contract.

C. Field Reports: Indicate deficiencies in systems that would prevent proper testing, adjusting and balancing of systems and equipment to achieve specified performance.

1. Submit under provisions of Section 014000 – Quality Control.

2. Prior to commencing work, submit report forms or outlines indicating adjusting, balancing and equipment data required.

3. Submit draft copies of report for review prior to final acceptance of Project. Provide final copies for inclusion in operating and maintenance manuals.

4. Provide reports in letter size, 3 ring binder manual, complete with index page and indexing tabs with cover identification at front and side. Include set of reduced drawings with air outlets and equipment identified to correspond with data sheets and indicating thermostat locations.

5. Include detailed procedures, agenda, sample reports forms and copy of AABC National Project Performance Guaranty prior to commencing system balance.

6. Test Reports: Indicate data on AABC MN-1 forms, forms prepared following ASHRAE 111, NEBB forms, or forms containing information indicated in Schedules.

7. Include the following on the title page of each report.

   a. Name of Testing, Adjusting and Balancing Agency.
   b. Address of Testing, Adjusting and Balancing Agency.
   c. Telephone number of Testing, Adjusting and Balancing Agency.
   d. Project name.
   e. Project location.
   f. Project Architect.
   g. Project Engineer.
   h. Project Contractor.
   i. Report date.

D. Project Record Documents: Record actual locations of all water systems balancing valves and rough setting.

1.7 DEFINITIONS

A. AABC: The Associated Air Balance Council is a non-profit association of independent, certified agencies specializing in testing and balancing HVAC systems.

B. ASHRAE: American Society of Heating, Refrigerating and Air Conditioning Engineers.

C. HVAC: Heating, Ventilating and Air Conditioning.

D. TAB: Testing, Adjusting and Balancing of HVAC Systems to meet design objectives and obtain optimum system performance.

E. NEBB: National Environmental Balancing Bureau

F. TBE: Test and Balance Engineer is an individual certified by AABC as having a degree in Engineering and (3) years of test and balance experience, or (5) years of background in the air conditioning field and (5) years continuous field experience in testing and balancing work. The TBE must also pass the AABC Test and Balance Engineer Certification Examination.

1.8 AGENCY QUALIFICATIONS

A. Testing and balancing agency shall be a member of AABC or NEBB with a minimum of five (5) years of documented experience.

B. An AABC certified NEBB certified testing and balancing person shall be responsible for certification of the total work of this section.

C. All work shall be performed in accordance with AABC National Standards. If these specifications set forth more stringent requirements than the AABC National Standards, the more stringent specifications shall prevail.

1.9 QUALIFICATION SUBMITTALS

A. Testing and Balancing Agency shall submit a company resume listing personnel and project experience in the field of air and hydronic system balancing.

B. Testing and balancing agency shall submit an inventory and calibration data of all instruments and devices in possession of the balancing agency to enable the Owner or his representative to evaluate the balancing agency's performance capability.

C. The testing and balancing agency shall submit to the Owner or the Owner's representative, upon acceptance of the contract, an AABC or NEBB "Quality Assurance Guaranty."

D. Within (30) days after acceptance of the contract, the testing and balancing agency shall submit to the Design Engineer a working agenda which will include procedures for testing and balancing each type of air and water flow system. The Test and Balance Report format will also be submitted indicating data to be recorded.

1.10 CONTRACT DOCUMENTS

A. Within (30) days after selection of the test and balance agency, the Construction Manager shall provide the agency with the following:

1. Construction Drawings
2. Equipment Specifications
3. Equipment Submittals

B. The testing and balancing agency shall be provided the following as issued or received:

1. Change Orders/Current Updated Construction Mechanical Drawings incorporating all revisions

2. Equipment Manufacturer's Submittal Data

3. Mechanical/Air Conditioning Contractor's Shop Drawings

4. Temperature Control Drawings

5. Project Schedule

1.11 NOTIFICATION AND SCHEDULING

A. A prebalance conference shall be held prior to job start as scheduled by the Owner or Owner's representative. Attendees at the meeting shall include representatives of the test and balance agency, General Contractor, Mechanical Contractor, Control Contractor, Owner and Mechanical Engineer.

B. The schedule for testing and balancing the HVAC system shall be established by the Owner or Owner's representative, in coordination with the testing and balancing agency on a critical path network.

C. The testing and balancing agency is responsible for initiating this continuing coordination to determine schedule for final testing and balancing services.

D. It will be necessary for the testing and balancing agency to perform its services in close coordination with the Mechanical Contractor, with all scheduling and deficiencies reported through the Owner or Owner's representative.

E. Before testing and balancing commences, the testing and balancing agency shall receive notification, in writing, from the Mechanical Contractor that the system is operational, complete, and ready for balancing.

F. A completed system exceeds physical installation: the Mechanical Contractor shall certify that all prime movers, fans, pumps, cooling towers, boilers, etc., are installed in good working order, and that full load performance has been preliminary tested.

G. The Mechanical Contractor shall certify in writing, that all equipment has been checked, started, adjusted by the manufacturer, and operated for the specified period of time.

1.12 COORDINATION WITH OTHER TRADES

A. To bring the HVAC system into a state of readiness for testing, adjusting and balancing, the Mechanical Contractor shall perform the following:

1. Air Distribution Systems

a. Ensure that all splitters, extractors, volume, smoke and fire dampers are properly located and functional. Dampers serving requirements of smoke, minimum and maximum outside, return, relief, and exhaust air shall provide tight closure and full opening, with a smooth and free operation.

b. Verify that all supply, return, exhaust, and transfer grilles, registers and diffusers are installed and operational.

c. Ensure that air handling systems, units, heat pumps, makeup air units and associated apparatus, such as heating and cooling coils, filter sections, access doors, etc. are blanked and/or sealed to eliminate excessive bypass or leakage of air.

d. Ensure that all fans (supply, return, relief, and exhaust) are operating and free of vibration. All fans and drives shall be checked for proper fan rotation and belt tension. Overload protection shall be of proper size and rating. A record of motor current and voltage shall be made to verify that the motors do not exceed nameplate rating.

e. Make any necessary changes to the sheaves, belts, and dampers, as required by the testing and balancing agency, at no additional cost to Owner.

f. Install clean filters prior to testing.

2. Water Circulating Systems

a. Check all pumps to verify pump alignment and rotation.

b. Ensure that systems are clean, with the proper strainer screens installed for normal operation.

c. Check all pump motors for current and voltage, to ensure that motors do not exceed nameplate rating.

d. Provide overload protection of proper size and rating.

e. Ensure that all water circulating systems shall be clean, full and free of air, that expansion tanks are set for proper water level, and that all air vents are installed at high points of systems and are operating.

f. Check and set operating temperature of heat exchangers to design requirements.

B. The Temperature Control Contractor shall perform the following:

1. Verify that all control components are installed in accordance with project requirements and are functional, including all electrical interlocks, damper sequences, air and water resets, and fire and freeze stats.

2. Verify that all controlling instruments are calibrated and set for design operating conditions.

3. Calibrate room thermostats after installation and before the thermostat control verification tests are performed. The test and balance agency shall verify the accuracy of final settings by taking temperature readings. The readings shall be in a typical conditioned space for each separately controlled zone.

4. The Control Contractor shall allow sufficient time in the project to provide assistance and instruction to the testing and balancing agency in the proper use and setting of control components such as, but not limited to, computers, static pressure controllers or any other device that may need setpoints changed so that the testing and balancing work can be performed.

C. The Mechanical Contractor, Temperature Control Contractor, and the suppliers of the HVAC equipment shall all cooperate with the testing and balancing agency to provide all necessary data on the design and proper application of the system components. In addition, they shall furnish all labor and materials required to eliminate any system deficiencies.

D. In coordination with the General Contractor, the testing and balancing agency shall arrange for an area of ample size and convenient location for storage of tools, equipment, and other items as required.

PART 2 - PRODUCTS

2.1 GENERAL

A. The Construction Manager shall procure the services of an independent Balancing and Testing Contractor who specializes in the balancing and testing of heating, ventilating and air conditioning systems to balance and adjust, all moving equipment and air distribution and exhaust systems and test all water systems and equipment, as herein specified. All work by the Balancing Contractor shall be done under direct supervision of a qualified heating and ventilating Engineer employed by the Balancing Contractor. Balancing Contractor shall submit credentials and be approved prior to any contract award.

B. Balance and testing shall not begin until all HVAC systems have been completed and are in full working order, as determined by the Architect. Where construction is phased, the Testing and Balancing Contractor shall submit a plan of action which outlines how each phase will be balanced and how, when completed, the entire system will be verified to be tested and balanced. The Balancing Contractor shall coordinate his work with the HVAC and ATC Contractors, shall place all heating, ventilating and air conditioning systems and equipment into full operation, and continue the operation of same during each working day of adjusting and balancing.

C. The Balancing Contractor shall perform all tests as hereinafter specified, compile the test data, and submit five (5) copies of the complete test data to the General Contractor for forwarding to the Architect for evaluation and approval.

D. The Construction Manager shall award the test and balance contract to the approved agency at the beginning of construction of the project to allow the Balancing Contractor to schedule this work in cooperation with the HVAC Contractor, ATC Contractor and other Trades involved and comply with completion data and requirements, as well as provide a list of areas where special requirements for balancing devices (dampers, valves) might occur.

E. The Balancing Contractor shall provide all testing instruments used for balancing air and water systems. Testing instruments shall have been calibrated within a period of six (6) months prior to balancing. Types, serial numbers and dates of calibration of all instruments shall be listed in the final air and water balance reports herein specified.

F. The Architect's, Engineer's and Owner's designated representatives shall be notified minimum five (5) days in advance of proceeding with balancing work to allow time for the witnessing of the testing, balancing and adjusting.

G. The Balancing Contractor shall provide all manpower, instruments, temporary connections and all other materials required to accomplish the balancing and testing as hereinafter specified. In the case of phased construction, the action plan shall include an explanation of all temporary facilities and their effect on the overall system.

H. The Balancing Contractor shall balance cooling systems in the air conditioning season and heating systems in the heating season. **This requirement is mandatory.**

I. In the event it becomes necessary for the Owner to balance the HVAC systems correctly, after the balancing is complete, the cost of this work will be back charged to the Balancing Contractor.

2.2 SCHEMATIC SYSTEM DRAWINGS

A. Piping Systems

1. The Balancing Contractor shall prepare schematic diagrammatic drawings for the following systems:

   a. Chilled Water
   b. Hot Water
   c. Process Chilled Water
   d. Condenser Water

2. The drawings will be 1-line schematic representation of the systems as they are installed, indicating all major automatic control valves, strainers, pressure reducing valves, etc., as well as all water flow and energy meters.

3. The diagrams shall indicate, in addition to the graphic representation requirements outlined above, all pressure drops (design conditions and actual conditions) of each valve, strainer, meter, etc., as well as all flows at each meter.

4. The use of the Engineer's construction drawing diagrams can be utilized by the Balancing Contractor as the base of the diagrams required. However, the drawings will have to be updated by the Balancing Contractor for field modifications which may have occurred during construction.

B. Ductwork Systems

1. The Balancing Contractor shall prepare schematic diagrammatic drawings for the following:

   a. Supply air systems (all units)
   b. Return air systems (all units)
   c. All exhaust air systems including specialized exhaust systems

2. The drawings will be 1-line airflow schematics emanating from the air handling equipment, through shafts, to the first major split of duct branches on each floor. The drawings will indicate the air quantities measured at these major branches, pressure drop and any other pertinent information deemed necessary by the Architect.

3. In addition to the duct schematic drawings, the Balancing Contractor shall prepare individual schematic drawings for each air handling unit indicating the pressure drop of each component of the unit, including the discharge plenum and unit duct discharge and shall prepare composite schematic drawing of all "special pressure" rooms or spaces which shall show on one drawing, the supply, return and/or exhaust systems, flow rates (design and actual) and final offset pressure/CFM.

4. Balance “special pressure” spaces to the minimum differential pressure as scheduled:

a.	Pressurized Elevator Shafts	+0.05” Water Gauge
b.	Pressurized stairs shaft	+0.10” Water Gauge
c.	Others Positive	+0.025” Water Gauge
d.	Others Negative	-0.025” Water Gauge
e.	Building Pressurization	+0.01” to +0.05” Water Gauge

C. The intent of the required documentation would be to clearly indicate the balancing and performance of the systems as they are installed. Furthermore, the above-required information will be utilized by the Owner for future renovation and/or alterations of the various systems. Therefore, the drawing content and presentation will be submitted to the Architect for review prior to actual commencement of the work. In the case of phased construction, the schematics shall indicate the limit of each phase and any temporary measures taken to obtain system performance.

D. The drawings shall be produced on AutoCAD latest, and a disc and one (1) set of reproducible vellums shall be submitted to the Owner through the Architect, for his use. All costs associated with the production of the documents shall be included under the Balancing Contractor's contract.

E. Test Code Drawings

1. Each report shall contain a single line drawing or drawings of the air distribution system with the fan system, applicable zoning, etc., indicated. Each and every outlet supply and return shall be indicated on this drawing by a number corresponding to the number of the outlet test sheet.

2.3 TEST FORMS USED BY BALANCING ENGINEERS AND TECHNICIANS SHALL BE SET UP TO INCLUDE THE FOLLOWING INFORMATION:

A. Each sheet shall have the job name and address, the name of the Balancing Contractor, Owner, Architect and Engineer, the instruments used to perform the test, and the name of the test Technician, date and time of test, outside db/wb temperatures.

B. All forms shall be submitted on a standard 8 1/2" by 11" good quality paper, bound together to form a complete report. All forms shall be submitted in typewritten form; handwritten forms are not acceptable. Cover of first sheet shall list the name of the job and the location of same. Copies of all forms shall be submitted to the Architect for review and acceptance prior to the work beginning.

C. Diffuser, Grille, Register, Fume Hoods, and All Types of Air Terminal Test Sheets

1. Each sheet shall be arranged in columns and all final sheets shall show the following data:

a. Fan system.

b. Room number or area designation.

c. Outlet code number which shall correspond to code number.

d. Size of outlet - manufacturer's listed data.

e. Type of outlet per manufacturer's model designation.

f. Manufacturer of outlet.

g. Manufacturer's effective area for each size.

h. Schedule FPM and required CFM of each outlet, individually for heating and cooling.

i. Test resultant FPM and CFM of each outlet, individually for heating and cooling.

j. Testing, setting and report of CFM settings for each terminal box, including pressure drop at each setting (heating and cooling).

k. All rooms/spaces with ducted supply and return/exhaust are to have supply, return/exhaust quantities shown on the same sheet. All rooms are to have air quantities for supply, return/exhaust listed per individual room. Supply, return/exhaust readings shall be listed sequentially, with final CFM offset, or room pressure clearly identified.

2. Each exhaust hood that is exhausted by ductwork shall be tested, adjusted and balanced in coordination with the hood manufacturer, ATC Contractor, HVAC Contractor and fume hood controls manufacturer. Verify manufacturer's procedures and schedule testing with the required contractors prior to proceeding. Submit and coordinate the proposed testing procedure with the Owner's representatives and engineer prior to proceeding. Testing of face velocity shall be performed using a multipoint thermal anemometer device that is professionally calibrated prior to testing. Face velocity shall be measured at a minimum of one (1) reading per each square foot of open sash. Readings shall be recorded individually and averaged over the entire openings.

a. Constant Volume Fume Hoods

1) Set exhaust valve to desired exhaust rate (CFM).

2) Set sash in full open (or normal operating) position.

3) Measure airflow CFM and face velocity across open sash per ASHRAE 10 and ANSI Z9.5.

4) Adjust exhaust valve setting to achieve desired CFM exhaust.

5) Calibrate exhaust flow transducer reading to match measured exhaust CFM.

b. VAV Fume Hoods (With Individual Fan)

1) Test exhaust fan as described in paragraph 5. at full flow and at minimum sash height.

2) Set sash in full open, normal operating and minimum positions. (Normal operating position as selected by institution or designated by engineer.)

3) Measure exhaust airflow CFM and face velocity across open sash per ASHRAE 110 and ANSI Z9.5 at all positions.

4) Resheave fan as required at full capacity on VFD (60 Hz) to match full open exhaust flow rate.

5) Verify and adjust fume hood controls in coordination with fume hood control manufacturer to maintain 100 FPM (adj.)

face velocity at full open normal operating and minimum positions.

c. VAV Fume Hoods (With Individual Fan)

d. Test exhaust fan as described in paragraph 5. at full flow and at minimum sash height.

e. Set sash in full open, normal operating and minimum positions. (Normal operating position as selected by institution or designated by engineer.)

f. Measure exhaust airflow CFM and face velocity across open sash per ASHRAE 110 and ANSI Z9.5 at all positions.

g. Resheave fan as required at full capacity on VFD (60 Hz) to match full open exhaust flow rate.

~~5)~~**h. Verify and adjust fume hood controls in coordination with fume hood control manufacturer to maintain 100 FPM (adj.) face velocity at full open normal operating and minimum positions.**

D. Air Handling Equipment Test Sheets

1. Each sheet shall contain two (2) columns, one (1) for specified conditions and one (1) for test conditions obtained. When units tested are variable air volume (VAV) data shall be submitted for maximum and minimum air flows.

2. All final sheets shall list the following data:

   a. System fan number.
   b. Fan manufacturer and model number.
   c. Fan curve.
   d. Total CFM.
   e. Return air, CFM.
   f. Outside air, CFM.
   g. Total static pressure.
   h. Suction static pressure.
   i. Discharge static pressure.
   j. Motor manufacturer.
   k. Motor size, voltage, phase and RPM.
   l. Amperage nameplate rating.
   m. Final operating amperage.
   n. Fan RPM (supply).
   o. Fan RPM (return).
   p. Component pressure drop.

E. Exhaust and Ventilating Fan Test Sheets

1. Each sheet shall contain in two (2) columns, one (1) for specified conditions and one (1) for test conditions obtained. Variable volume systems data is to be submitted for both maximum and minimum air flows.

2. All final sheets shall list the following data:

   a. Exhaust fan system and exhaust fan number.
   b. Fan manufacturer.
   c. Fan curve.
   d. Size and model.
   e. Motor HP, voltage and phase.
   f. Changes made or recommended.
   g. Amperage nameplate rating.
   h. Final operating amperage.
   i. Fan RPM.
   j. Total CFM.
   k. Suction static, discharge static, total static.

F. Temperature Test Sheets (As Applicable For Each Air Handling Unit)

1. The temperature test sheets shall list both the specified conditions and the actual operating conditions in opposite columns. Items listed on this sheet shall be as follows:

   a. Cooling Cycle: Chilled Water

      1) Entering air db and wb temperature.
      2) Leaving air db and wb temperature.
      3) Outside air db and wb temperature.
      4) Chilled water supply temperature.
      5) Chilled water return temperature.
      6) Unit discharge temperature.

   b. Heating Cycle: Hot Water/Steam

      1) Entering air db temperature.
      2) Leaving air db temperature.
      3) Entering and leaving coil water temperatures/entering steam pressure.
      4) Outside air db and wb temperatures.
      5) Unit discharge temperature.

G. Pump Test Sheets

1. For each pump the following data shall be listed:

   a. Pump number and system name.
   b. Pump manufacturer and model number.
   c. Pump curve.

d. Motor HP and RPM.
e. Voltage - Nameplate, test.
f. Amperage - Nameplate, test.
g. GPM, rated, tested.
h. Pressure rise rated, test.
i. Inlet pressure, outlet pressure.
j. Inlet temperature.
k. Shut-off pressure.

H. Coil and All Other Heating Element Test Sheets (Unit Heaters, Reheat Coils, Reheat Boxes, Cabinet Unit Heaters, Fan Coil Unit)

1. For each element both the specified and test conditions shall be listed:
2. Inlet water temperature (hot/chilled water).
3. Inlet air temperature.
4. Outlet water temperature (hot/chilled water).
5. Outlet air temperature.
6. Pressure drop through unit.

I. Velocity and Pressure Test Sheets for Main and Branch Ducts

1. Duct location or designation.
2. Duct size.
3. Number of velocity readings.
4. Duct average velocity.
5. Total CFM.
6. Duct average static pressure.

J. Calibration of air flow measurement stations in cooperation and in conjunction with ATC contractor, provide all necessary pitot tube traverses and/or other air measurements necessary to field verify the accuracy of all installed air flow measurement stations at all air handling units, exhaust air handling units, return fans and cuts. Calibration reading s shall be taken at 100%, 75%, 50% of rated flow and a curve shall be prepared that indicates any deviation between air flow station readings and field readings at these floors.

PART 3 - EXECUTION

3.1 AIR SYSTEM BALANCING AND TESTING PROCEDURES

A. The Balancing Contractor shall perform the following tests, and balance all systems in accordance with the following requirements after clean filters are installed in all filter banks before tests are performed:

1. Test and adjust blower RPM or blade pitch angle on vane axial fans to achieve design requirements.

a. Test and record motor full load ampere.

b. Make pitot tube transverse of main supply, return and exhaust air ducts to obtain design CFM at fans.

c. Test and report system static pressure, suction and discharge.

d. Test and adjust system for design CFM recirculated air.

e. Test and adjust system for design CFM outside air.

f. Test and record entering and leaving air temperatures (db-wb cooling and db heating).

g. Adjust all main supply, return and exhaust air ducts to proper design CFM.

h. Adjust all zones and branches to proper design CFM, supply, return and exhaust systems.

i. Test and adjust each diffuser, grille, register, and constant volume box to within ±5% of design requirements.

j. Identify and list size, type and manufacturer of diffusers, grilles, registers, and terminal volume boxes. Include information regarding coils where applicable.

k. Measure air quantities in main and branch ducts by traversing entire cross sectional area of duct with pitot tube. Ducts having velocities of 1000 feet per minute or more shall be measured with inclined manometers (draft gauge) or magnehelic gauges; ducts having velocities of less than 1000 per feet per minute shall be measured with micromanometers, hook gauges, or similar low pressure instruments. Openings in ducts for pitot tube insertion shall be sealed with snap-in plugs and covered with duct tape after air balance is complete. Diffuser, grille and register air quantities shall be determined by direct reading velocity meters in accordance with the manufacturer's recommendations.

l. Identify, adjust, balance and measure air quantities in all types of hoods or exhaust "trunks", where applicable. Identify systems by fan designation and room name.

m. Obtain design air quantities in main ducts by adjusting fans. Branch duct air quantities shall be adjusted by volume dampers. Dampers shall be permanently marked after air balance is complete to enable them to be restored to their correct position if disturbed at any time.

n. As part of this Contract, the Balancing Contractor shall change the pulleys, belts, and fixed sheaves to provide for permanent sheaves, pulleys and belts, based on the final balancing, in order to ensure proper air delivery of the various systems. The Balancing Contractor shall also make

all necessary adjustments to vane axial fan blade pitch angle to achieve required airflow.

o. In cooperation with the ATC Contractor, determine the proper setpoint for all automatically operated dampers, air valves, static pressure sensors, inlet vane actuators, or other variable or controllable devices requiring coordination between Balancing Contractor and ATC Contractor. The Balancing Contractor shall determine the lowest system static setpoint possible that will deliver the proper air quantities to all outlets at the maximum cooling condition, and will adjust the fan system to operate at its most economical setting to achieve this static setpoint. Fans will be adjusted to the most economical setting by adjusting the fan speed (or blade pitch angle) with any variable volume devices in their maximum or wide-open position. Final static pressure setpoints are to be recorded in the test and balance report and listed for each unit.

p. Any dampers, safing of baffles required for final balancing, as determined by the Balancing Contractor the Architect, will be provided by the Sheet Metal Contractor to ensure proper performance, at no extra cost to the Owner.

3.2 WATER SYSTEM BALANCING AND TESTING PROCEDURES

A. Preparation of the System for Water Testing and Balancing

1. The Balancing Engineer or Technician must prepare the water system for balancing in the following manner:

a. Open all valves to full position, including coil stop valves, return line balancing cocks and close all bypass valves, including system differential pressure bypass valve if applicable.

b. Remove, clean and/or replace all strainers.

c. Examine water in system to determine if it has been treated and is clean.

d. Check pump rotation, correct if necessary.

e. Check expansion tank to make sure it is not air bound and that the system is full of water.

f. Check all air vents at high points of water systems to make sure they are installed properly and are operating freely.

g. Make certain all air is removed from circulating system.

h. Check operation of differential automatic bypass valves, set valve in closed position.

i. Check and set operating temperature of systems to design requirements.

j. Complete air balancing must have been accomplished before water balance is begun.

k. Set all temperature controls so that all cooling coils are calling for full cooling and heating coils are calling for full heating.

l. Set hot and chilled water systems to proper GPM delivery.

m. Check leaving water temperature, return water temperature and pressure drop through all coils. Reset to correct design temperatures.

n. Balance each hot water coil, chilled water coil and all other heating elements.

o. After making adjustments to coils and other waterflow elements, reset settings at pumps, as required to obtain proper flows.

p. Determine system operating differential pressure and, in conjunction with the ATC Contractor, set any differential pressure valves for proper operation.

q. Upon completion of flow readings and coil adjustments, and after water balance is complete, permanently mark all balancing valves, cocks and flow meters so that they can be restored to their correct position if disturbed. Properly set memory stops on all balancing valves so equipped.

r. After the Balancing Contractor sets all waterflow balancing devices to proper design GPM, he shall mark the GPM flows on the piping schematic drawings.

s. The Balancing Contractor shall determine the lowest possible differential pressure control point possible for all variable speed pumping systems and for all differential pressure bypass control valves. In systems that have both variable speed pumping controlled by differential pressure and a differential pressure bypass valve, the Balancing Contractor shall assure, in conjunction with the ATC Contractor, that a minimum of 3 psig difference in setpoints is maintained between the two control settings with the differential pressure setpoint for the variable speed pumping system being the lower of the two settings.

3.3 INSTALLED ELEMENT TEST PROCEDURES

A. Element identification (location or number designation).

B. Required temperature drop corrected for actual entering air and water conditions.

C. Element adjusted until the required drop is obtained.

3.4 CONTROL SYSTEMS VERIFICATION

A. Verify all control devices are properly connected.

B. Verify all dampers, valves and other controlled devices are operated by the intended controller.

C. Verify all dampers and valves are in the position indicated by the controller (open, closed, modulating).

D. Verify the integrity of valves and dampers in terms of tightness of close off and full open positions.

E. Check all valves are properly installed in the piping system in relation to direction of flow and location.

F. Check calibration of all controllers.

G. Verify the proper application of all normally open and normally closed valves.

H. Check the location of all thermostats and humidstats for potential erratic operation from outside influences such as sunlight, drafts or cold walls.

I. Check the locations of all sensors to determine whether their position will allow them to sense only the intended temperatures or pressures of the media. Control Contractor will relocate as deemed necessary by the testing and balancing agency.

J. Check the sequence of operation that any control mode is in accordance with approved shop drawings. Verify that only minimum simultaneous heating and cooling occurs. Observe that the control valves at the boiler/heat pump loop are properly sequenced.

K. Verify all controller setpoints meet the design intent.

L. Check all dampers for free travel.

M. Verify the operation of all interlock systems.

N. Perform all systems verification to ensure the safety of the system and its components.

3.5 SPECIAL SYSTEMS TESTING

A. Duct Leakage Testing

1. Testing shall be conducted before external insulation is applied and before ducts are connected.

2. Mechanical Contractor to close off and seal all openings in the duct section to be tested.

3. Each section shall be tested by the Mechanical Contractor in accordance to the leakage class as specified under Section 233100 and SMACNA Standards. All tests shall be witnessed and documented by the TAB Contractor.

B. Sound and Vibration Testing

1. Sound

a. Sound level readings shall be taken in at least (10) locations in the building with an octave band analyzer.

b. The test data for each area will be recorded on noise criteria curves indicating the decibel level read in each frequency band, the NC level required, and the NC level measured.

c. Readings shall be taken at night in order to reduce the ambient noise level.

d. The testing and balancing agency will submit the test data and test equipment data to the Architect and Engineer for their review and include the approved forms in the testing and balancing report.

2. Vibration

a. Vibration field measurements shall be taken as required for each circulating water pump, cooling towers, air handling unit, and fan driven by a motor over 10 HP.

b. Readings shall include shaft alignment, equipment vibration, bearing housing vibration, foundation vibration, and building structure vibration.

c. Readings shall be made using portable equipment capable of filtering out unwanted frequencies.

d. Maximum vibration at any point listed above shall not exceed criteria listed in the ASHRAE Handbook, HVAC Systems and Application, Chapter 52 "Sound and Vibration Control", Table 26 "Equipment Vibration Criteria", unless otherwise specified. Readings shall be taken with vibration isolation blocked solid to the foundation.

C. Cooling Tower Testing

1. Test temperature of cold water leaving the cooling tower (LWT).

2. Test temperature of hot water entering the cooling tower (EWT).

3. Test wet bulb temperature of air entering the cooling tower (EWB).

4. Test dry bulb temperature of air entering the cooling tower (EDB).

5. Test temperature of the make up water entering the tower (Tmu) if not shut off during testing.

6. Test flow rate of the make-up water entering the tower (GPMct).

7. Test flow rate of water recirculating through the cooling tower (GPMct).

8. Test flow rate of the blowdown (bleed) discharged from the tower (GPMb) if not shut off during testing.

9. Test power input to the fan motor(s) (kW).

10. Test pump discharge pressure (P).

11. Test Barometer pressure (Pb).

3.6 SYSTEM PERFORMANCE VERIFICATION

A. At the time of final inspection, the test and balance agency shall recheck, in the presence of the Owner's representative, specific and random selections of data, air quantities, and air motion recorded in the Certified Report.

B. Points and areas for recheck shall be selected by the Owner's representative.

C. Measurement and test procedures shall be the same as approved for work forming basis of Certified Report.

D. Selections for recheck, specific plus random, will not normally exceed 25% of the total number tabulated in the report, except that special air systems may require a complete recheck for safety reasons.

E. If random tests elicit a measured flow deviation of 10% or more from that recorded in the Certified Report listings, by 10% or more of the selected recheck stations, the report is rejected, all systems shall be readjusted and tested, new data recorded, new Certified Report submitted, and new inspection tests made, all at no additional cost to Owner.

F. Following system verification of the Certified Report by the Owner's representative, the settings of all valves, splitters, dampers, and other adjustment devices shall be permanently marked by the testing and balancing agency so that adjustment can be restored if disturbed at any time. Devices shall not be marked until after system verification.

3.7 OPPOSITE SEASON TEST

A. The testing and balancing agency shall perform an inspection of the HVAC system during the opposite season from that in which the initial adjustments were made. The testing and balancing agency shall make any necessary modifications to the initial adjustments to produce optimum system operation.

3.8 RECORD AND REPORT DATA

A. The test and balance report shall be complete with logs, data and records as required herein. All logs, data and records shall be typed on white bond paper and bound. The report shall be certified accurate and complete by the testing and balancing agency's certified balancing engineer.

B. Six (6) copies of the test and balance report are required and shall be submitted to the Owner or the Owner's representative.

C. The report shall contain the following general data in a format selected by the testing and balancing agency.

1. Project number.
2. Contract number.
3. Project title.
4. Project location.
5. Project Architect.
6. Project Mechanical Engineer.
7. Test and Balance Agency.
8. Balancing Engineer.
9. General Contractor.
10. Mechanical Contractor.
11. Date tests were performed.
12. Certification.

D. The test and balance report shall be recorded on report forms conforming to the recommended forms in AABC National Standards. At a minimum, the report shall include:

1. Preface: A general discussion of the system, any abnormalities and problems encountered.

2. Instrumentation List: The list of instruments including type, model, manufacturer, serial number, and calibration dates.

3. System Identification: In each report the supply, return and exhaust openings and traverse points shall be numbered and/or lettered to correspond to the numbers and letters used on the report data sheets.

4. Air Handling Equipment (Heat Pumps, Makeup Air, Roof Top Units, etc.)

a. Manufacturer, model number, and serial number.

b. All design and manufacturer related data.

c. Total actual CFM by traverse if practical; if not practical, the sum of the outlets may be used, or a combination of each of these procedures. For

specific systems, such as ones with diversity, see the AABC National Standards.

d. Suction and discharge static pressure of each fan, as applicable.

e. Outside air and return air total CFM.

f. Actual operating current, voltage, and brake horsepower of each fan motor.

g. Final RPM of each fan.

h. Fan and motor sheave manufacturer, model, size, number of grooves, and center distance.

i. Belt size and quantity.

j. Static pressure controls final operating setpoints.

5. Pumps

a. Manufacturer, size, and serial number.

b. All design and manufacturer's related data.

c. Pump operating suction and discharge pressure and final total dynamic head.

d. No flow (pump discharge valve closed) suction and discharge pressure and corresponding total dynamic head. This procedure is to determine actual impeller size.

e. Rated and actual operating current, voltage, and brake horsepower of each pump motor.

f. Submit pump curve showing design, operating, and no-flow points of operation.

6. Heat Exchangers

a. Manufacturer and model number.
b. All design and manufacturer's related data.
c. Service and location.
d. Actual pressure drop and related GPM – condenser water side.
e. Actual pressure drop and related GPM – heat pump side.
f. Entering and leaving temperatures condenser water and heat pump water.
g. Temperature control setting.

7. Cooling Tower

a. A copy of the Cooling Tower Test Data Summary sheet.

b. A sketch of the cooling tower installation showing tower orientation, principal dimensions, location of temperature and flow rate measurement points, and notation of any building obstructions or other equipment in the immediate vicinity of the tower.

c. Copies of completed test data sheets.

d. A copy of test calculations, including performance curves and cross plots.

e. Observations on compliance with test code limitations and uniformity of test conditions. Include comments on any suggested changes to the tower such as increasing fan speed or blade pitch to obtain rated brake horsepower.

END OF SECTION

SECTION 23 0713 – DUCT INSULATION

PART 1 – GENERAL

1.1 RELATED DOCUMENTS

A. Drawings and general provisions of the Contract, including General and Supplementary Conditions, Section 230500 and other Division 1 Specification Section, apply to this Section.

B. LEED Building General Requirements: The Owner requires the Contractor to implement practices and procedures to meet the project's environmental performance goals, which include achieving LEED Certification. Specific project goals that may impact this area of work include: Use of recycled-content materials; use of locally-manufactured materials; use of low-emitting materials; construction waste recycling; and the implementation of a construction indoor air quality management plan. The Contractor shall ensure that the requirements related to these goals, as defined in the sections below, are implemented to the fullest extent. Substitutions, or other changes to the work proposed by the Contractor or their Subcontractors, shall not be allowed if such changes compromise the stated LEED Building Performance Criteria.

1. Comply with LEED (Leadership in Energy and Environmental Design) Green Building Rating System BD+C, Version 3.

1.2 WORK INCLUDED

A. Furnish and install all duct insulation, vapor barriers, jackets, finishes, adhesives, cements and accessories to make a complete and insulated system of all ductwork, fittings, joints, offsets and accessories specified herein.

B. All insulation system materials shall conform to the maximum flame spread/smoke developed ratings specified herein.

C. All kitchen hood exhaust ductwork and accessories shall be insulated with a rated fireproof insulation system with zero clearance allowed. The system shall extend continuously from the hood connections to the fan intake connection.

1.3 RELATED SECTIONS

A. Examine all drawings and criteria sheets and all other Sections of the Specifications for requirements which affect work under this Section whether or not such work is specifically mentioned in this Section.

B. Section 017419 "Construction Waste Management and Disposal" for requirements related to construction waste management and disposal at the project site.

C. Section 018113 "VOC Limits for Adhesives, Sealants, Paints and Coatings" for restrictions of VOC in adhesives, sealants, paints and coatings.

D. Section 018119 “Construction Indoor Air Quality (IAQ) Management” for requirements during construction for indoor-air-quality management.

1.4 REFERENCES

A. Applicable provisions of the following Codes and Trade Standard Publications shall apply to the work of this Section, and are hereby incorporated into, and made a part of the Contract Documents.

B. Material standards shall be as specified or detailed hereinafter and as follows:

1. ASTM B 209 – Standard Specification for Aluminum and Aluminum-Alloy Steel and Plate.

2. ASTM B 209M – Standard Specification for Aluminum and Aluminum-Alloy Sheet and plate (Metric).

3. ASTM C 518 – Standard Test method for Steady-State Heat Flux Measurements and Thermal Insulating and Finishing Cement.

4. ASTM C 553 – Standard Specification for Mineral Fiber Blanket Thermal Insulation for Commercial and Industrial Applications.

5. ASTM C 612 – Standard Specification for Mineral Fiber Block and Board Thermal Insulation.

6. ASTM C 921 – Standard Practice for Determining the Properties of Jacketing Materials for Thermal Insulation.

7. ASTM C 1071 – Standard Specification for Thermal and Acoustical Insulation (Glass, Fiber, Duct Lining Material).

8. ASTM E 84 – Standard Test Method for Surface Burning Characteristics of Building Materials.

9. ASTM E 96 – Standard Test Methods for Water Vapor Transmission of Materials.

10. ASTM E 162 – Standard Test Method for Surface flammability of Materials Using a Radiant Heat Energy Source.

11. ASTM G 21 – Standard Practice for Determining Resistance of Synthetic Polymeric Materials to Fungi.

12. NFPA 96 – Ventilation Control and Fire Protection of Commercial Cooking Operations.

13. NFPA 255 – Standard Method of Test of Surface Burning Characteristics of Building Materials.

14. SMACNA (DCS) – HVAC Duct Construction Standards – Metal and Flexible.

15. UL 723 – Standard for Test for Surface Burning Characteristics of Building Materials.

16. ANSI/ASHRAE 90.1 - Energy Conservation in New Building Design.

1.5 SUBMITTALS

A. See Section 230500 and General Conditions for additional requirements.

B. Product Data: Provide product description, thermal characteristics, list of materials and thickness for each service, and locations.

C. Manufacturer's Instructions: Indicate installation procedures that ensure acceptable workmanship and installation standards will be achieved.

1.6 QUALITY ASSURANCE

A. All insulation materials, finishes, coatings, cements, tapes, jackets and other insulation accessories shall have minimum composite or individual fire hazard ratings as well as thickness and "C" values conforming to State Building Codes which control building construction materials that may be used on this project. Where specification requirements exceed the Code requirements, the specification shall govern.

B. Insulation for the various duct systems and associated equipment shall be composed of materials which are non-combustible and/or provide a fire resistive system of insulation which complies with the applicable Code having jurisdiction. Generally, it is required that fire hazard ratings shall not exceed the following, except as noted:

1. Flame Spread Rating: 25 (No Exceptions)
2. Smoke Developed Rating: 50

C. All fire hazard ratings shall be as determined by NFPA 255 "Method of Test of Surface Burning Characteristics of Building Materials", ASTM E84 or UL 723.

D. All insulation materials herein specified shall be used subject to the manufacturer's temperature limitations and their compatibility with other materials.

E. Installation of all insulation work shall be executed by a qualified Insulation Contractor who is thoroughly experienced in this particular type of work and who has adequate facilities and equipment for installation of all insulation work herein specified and who is familiar with the requirements of the Code enforcing Authorities as to fire hazard rating.

F. The finished installation shall present a neat and workmanlike appearance with all jackets smooth, with all vapor barriers sealed and intact.

G. Where insulation is specified for ductwork, insulate similarly all collars, dampers, edges, joints, etc. connected to system subject to heat loss or gain. Do not cover damper actuators or other maintenance points on equipment unless identified on the insulation with removable access panels or covers.

1.7 REGULATORY REQUIREMENTS

A. Conform to maximum flame spread/smoke developed rating of 25/50 in accordance with ASTM E 84, NFPA 255, or UL 723.

B. Kitchen hood exhaust ducts shall be insulated with an insulation system complying with NFPA 96.

1.8 DELIVERY, STORAGE AND PROTECTION

A. Accept materials on site, labeled with manufacturer's identification, product density and thickness.

B. All materials shall be stored in a dry area free from moisture and debris.

1.9 ENVIRONMENTAL REQUIREMENTS

A. Maintain ambient conditions required by manufacturers of each product.

B. Maintain temperature before, during and after installation for minimum of 24 hours.

PART 2 – PRODUCTS

2.1 MANUFACTURERS ACCEPTABLE FOR PRODUCT TYPES INDICATED CONTINGENT UPON PRODUCTS' COMPLIANCE WITH THE SPECIFICATIONS

A. Insulation:

1. Manville Corporation.
2. Owens-Corning Fiberglass Corporation.
3. Armstrong World Industries, Incorporated.
4. Certainteed Corporation.
5. Knauf

B. Mastics and adhesives:

1. Childers Products Company.
2. H. B. Fuller Company, Foster Products Division.
3. 3M Company Adhesives, Coatings and Sealers.
4. Armstrong World Industries, Incorporated.
5. Ruston Plant.
6. Chicago-Mastic
7. Insul-Coustic

8. St. Clair Rubber
9. Vimasco
10. Baldwin-Ehret-Hill

C. PVC fitting covers:

1. Manville, Corporation.
2. Ceel-Co.
3. Certainteed, Corp.
4. Cell Co. Plastics

2.2 FACED FLEXIBLE FIBER GLASS INSULATION

A. Faced flexible fiber glass duct insulation shall be equal and equivalent to Certainteeed Fiberglas Faced Duct Wrap, Type 75 having an approximate density of 0.75 lb./cu.ft. and an approximate thermal conductivity of 0.30 at 75° F.

B. Insulation shall be tightly wrapped on the duct work with all circumferential joints butted and longitudinal joints laped 2 inches and stapled. All joints shall be sealed with approved adhesive. Adhere insulation to ducts with 4 inch wide strips of an approved bonding adhesive, at 18 inches on center. Additionally, secure insulation to bottom of rectangular ducts over 24 inches wide with weld pins or stickclips at no more than 18 inches on center. Alternative means of securing insulation to ducts will be permitted, subject to the manufacturer's recommendations and the Architect's written approval.

C. Insulation shall be butted with facing overlapping all joints at least 2 inches and sealed with approved fire retardant vapor barrier adhesive. All breaks, punctures and pin penetration in facing, shall be sealed with vapor barrier tape per the manufacturer’s published installation instructions.

2.3 RIGID FIBERGLASS BOARD INSULATION

A. Rigid fiberglass board insulation shall be equal to Owens-Corning Fiberglas 25 with ASJ having an approximate density of 3 lbs./cu.ft. and an approximate thermal conductivity of 0.25 at 75°F.

B. The insulation shall be applied by use of weld pins or stick clips. Such fasteners shall be spaced 3 inches from each corner of the board with intermediate pins spaced no more than 12 inches on center. Pin caps shall be covered with a round vapor seal patch that matches the jacket on the ASJ board.

C. Ducts, plenums and equipment having sharp bend shall have the insulation scored as required to conform to the curved surfaces to provide a neat and workmanlike appearance when finished.

D. All insulation edges and joints shall be sealed with a fire retardant vapor barrier adhesive, reinforced with a vapor barrier tape similar to that of the board facing. Tape shall be 3 to 5 inches wide as recommended by the particular manufacturer.

E. The above specified insulation will be used in all areas, and it is intended that the finish present a neat and uniform appearance as to color and workmanship.

2.4 INSULATION FACING

A. Code ASJ: All service jacket composed of high intensity white chemically treated Kraft paper reinforced with fiberglass yarn and mesh and laminated to aluminum foil with a fire retardant adhesive. Longitudinal laps and butt strips shall be a minimum of 3 inches.

B. Code FSKL: 0.35 mil aluminum foil reinforced with fiberglass yarn reinforcing scrim and laminated to chemically treated fire resistive Kraft paper having a minimum 35 pound per inch width tensile strength when tested in accordance with ASTM D 828. Water vapor permeability 0.04 perms. Longitudinal laps and butt strips shall be a minimum of 3 inches.

2.5 ADHESIVES

A. Code ADH-2: Fast-drying vinyl base coating and lagging adhesive. Similar to Childers CP-50A HV2.

B. Code ADH-3: Fast-drying neoprene base adhesive for lap joints of foil-faced facing applied insulation. Similar to Childers CP-82.

C. Code ADH-4: Adhesive for use in adhering fiberglass board or blanket insulation to equipment. 3M Company Insulation Adhesive No. 35 or 38 non-flammable adhesive.

2.6 CAULKING COMPONENTS

A. Code CC-1: For use with foam glass and/or joint sealant applications. Flexible elastomeric vapor barrier sealant.

2.7 MASTICS

A. Code MAS-1: Vapor barrier mastic made with an elastomeric resin. For indoor use.

B. Code MAS-2: A non-water vapor barrier asphaltic emulsion coating, breathing type, for above ground installations. Similar to Childers CP-10.

C. Code MAS-3: Vapor barrier mastic made with an elastomeric resin. For outdoor use.

2.8 TIE WIRE

A. Tie wire for securing insulation in place shall be type 304 stainless steel annealed steel wire of gauge and proper spacing as recommended by the insulation manufacturer. Wire shall be drawn up tightly enough to become embedded in the insulation and the ends of the loop twisted, bent over, and pressed into the insulation so as to leave no ends protruding.

2.9 BANDING

A. 3/8 inch x 0.02 inch type 304 stainless steel for pipe insulation.

B. 3/4 inch x 0.02 inch type 304 stainless steel for additional insulation jackets.

2.10 WIRE MESH

A. Wire mesh shall be one inch by No. 20 BGW hexagonal mesh galvanized.

B. Expanded metal: Expanded metal shall be 1/2 inch Hi-Rib metal lath of copper bearing steel.

2.11 TAPE

A. Lead foil tape, where specified, shall be 3M Company Lead Foil Tape No. 422, 4 mil thick, acrylic adhesive, 2 inch wide.

B. Vinyl plastic tape, silver gray, flame resistant, vapor barrier sealant tape on rigid and flexible insulation material for warm or cold air ducts. Similar to 3M Company Duct Sealing Tape No. 474.

C. Aluminum foil tape, dead soft aluminum foil, point seal on stick pin, metal patching, moisture barrier, heat reflecting and general sealing on aluminum facing foil. Similar to 3M Company Aluminum Foil Tape No. 425.

2.12 STAPLES

A. Staples shall be galvanized clad outward clinching insulation staples.

2.13 INSULATING CEMENT

A. Insulating cement shall be a mineral-fiber (wool) ASTM C 195 base material having essentially the same insulating characteristics as the adjacent insulation. Similar to PABCO High Temperature Insulating Cement. Insulating cement shall be applied in layers to a maximum thickness of 1/2 inch. Each layer shall be allowed to dry thoroughly before subsequent layers are applied.

2.14 FINISHING CEMENT

A. Finishing cement ASTM C 449 shall be diatomaceous silica thermal insulating materials with a suitable proportion of heat resistant binder, hydraulic setting insulating cement capable of withstanding maximum temperature of 700 degrees Fahrenheit. When mixed with water it shall be a plastic mix suitable for trowel applications and shall present a hard, smooth and durable surface after drying. Similar to PABCO No. 127.

B. Combination insulating and finishing cement:

1. Similar to Ryder One Coat or equal.

C. Welding studs:

1. Welding studs shall be capacitor type split pin or TCP tipped insulation pins with speed clips. Similar to Nelson Stud Welding Spec. 28.

D. Corner angles on insulation of ducts, plenums and equipment in finished areas shall be formed of 28 gauge, 1 inch by 1 inch aluminum adhered to heavy Kraft paper having 2 inch by 2 inch by 2 inch wings to protect external corners under glass cloth jackets.

1. Corner beads shall be 26 gauge galvanized steel with 2 ½ inch wings (exposed ducts on roof).

PART 3 – EXECUTION

3.1 INSTALLATION OF INSULATION

A. All insulation shall be applied by experienced insulating contractors in accordance with best Trade practice.

B. Test, inspect and clean all surfaces of ductwork to be insulated before applying insulation.

C. Take all possible precautions to protect work of other Trades. Provide protective covering as required to accomplish this end. This Trade shall be responsible for returning all equipment and material to its original new condition and appearance where damage occurs due to his neglect.

D. All ductwork shall have been tested and approved prior to installation of insulation.

E. All ductwork and plenum or surfaces, where subject to condensation on the outside, shall be insulated including vapor seal finish.

F. All surfaces to be insulated shall be clean, dry and free from dirt and scale when insulation is being applied. Insulation shall be dry at the time of installation and before and during the process of finished application.

G. Butt ends will not be allowed. However, where required and approved by Architect, jacket material shall be pasted over exposed ends and banded to give a neat and finished appearance. Exposed fiberglass material will not be permitted.

H. Surfaces of insulation shall be smooth, even and true to line with jackets drawn tight and smoothly secured. Scrap pieces of insulation shall not be used where a full length section will fit.

I. The methods of application of insulation, finishes, adhesives, cements, accessories are generally specified under the material headings of these specifications. Where not

specifically detailed, it is intended that they are equal or exceed the manufacturer's published recommendations, existing at time of bid openings, subject to the approval of the Architect.

J. Butt covering neatly to walls, floors, ceiling. Apply band at end and position so band covers gap between surface and insulation where exposed.

K. All kitchen hood exhaust duct insulation shall have no gaps, voids or interferences. Provide supports 4'-0" o.c. for horizontal installation and 10'-0" o.c. for vertical installation. The system shall be continuous and installed in accordance with specific manufacturer's instructions and NFPA 96. The entire system shall be 2 hour UL rated. All joints shall be sealed using Super Calstik Glue. Maintain internal air space using Super Firetemp spacers.

L. Fastenings: Provide where required to securely hold insulation. Apply adhesive and weld pins and/or stick clips on exposed risers to prevent slipping and turning of insulation.

M. Thickness of insulation shall not be compromised due to piping interferences, improper installation or any other reason.

3.2 DUCTWORK EXPOSED TO WEATHER

A. When duct installation, sealing and testing is completed by the Mechanical Contractor, the Insulation Contractor shall cover all ducts exposed to weather with insulation in accordance with the insulation specification but in no case shall this be less than 2 inch thick fiber glass rigid board insulation with vapor barrier for ductwork. Insulation shall be installed in one piece and where applicable shall have mitered corners to fit tightly over the sheet metal. When insulation application is completed, the entire installation shall be covered with EPDM roofing material with the joints overlapping minimum of 6 inches. All joints shall be staggered and shall be covered with mastic to ensure a weatherproof system.

1. EPDM roofing shall be 60-mil. Ductwork to be tested to assure 0% leakage prior to installing EPDM material

2. Ductwork shall be 100% watertight.

PART 4 – SCHEDULES

4.1 DUCTWORK INSULATION SCHEDULE:

Service	Type Insulation and Thickness (Inches)	Facing	Additional Jacket
Outside Air Intake Ducts & Relief Plenums, Supply/Return Air Ductwork (Exposed)	Rigid Fiberglass Board Insulation 2" **See Note 1**	FSKL	

Service	Type Insulation and Thickness (Inches)	Facing	Additional Jacket
Boxes, sound attenuators, Plenums, Diffuser Plenums, Diffusers, all parts of the supply system (except in conditioned spaces)	Flexible Fiberglass w/Vapor Barrier 3” **See Note 1**	FSKL	
All Supply Air Ductwork except in conditioned spaces.	Flexible Fiberglass w/Vapor Barrier 3” **See Note 1**	FSKL	
Louver Blank-off Panels	Rigid Fiberglass Board Insulation 3”	FSKL	
Exhaust within 15'-0" of the outside	Rigid Fiberglass Board Insulation 2”	FSKL	
Outside Ductwork supply, exhaust, return and other	Rigid Fiberglass Board Insulation 2 times scheduled but not less than 2”	FSKL	EPDM roofing
Others not scheduled with system temperatures below 60°F or above 90°F	Flexible Fiberglass w/Vapor Barrier 1-1/2”	FSKL	

NOTES:

1. The installed R shall be R-8 or higher without considering any air films.

A. HVAC Insulation Schedule Notes

1. Provide vapor barrier on all ductwork insulation.

2. Ductwork exposed to weather shall be insulated with external insulation using double the thicknesses scheduled hereinbefore, up to 24 inches beyond the point where ducts (supply and return) enter the building. Provide weatherproof jacket as hereinafter specified.

END OF SECTION

SECTION 23 0716 – EQUIPMENT INSULATION

PART 1 - GENERAL

1.1 RELATED DOCUMENTS

A. Drawings and general provisions of the Contract, including General and Supplementary Conditions, Section 230500 and other Division 1 Specification Sections, apply to this Section.

B. LEED Building General Requirements: The Owner requires the Contractor to implement practices and procedures to meet the project's environmental performance goals, which include achieving LEED Certification. Specific project goals that may impact this area of work include: Use of recycled-content materials; use of locally-manufactured materials; use of low-emitting materials; construction waste recycling; and the implementation of a construction indoor air quality management plan. The Contractor shall ensure that the requirements related to these goals, as defined in the sections below, are implemented to the fullest extent. Substitutions, or other changes to the work proposed by the Contractor or their Subcontractors, shall not be allowed if such changes compromise the stated LEED Building Performance Criteria.

1. Comply with LEED (Leadership in Energy and Environmental Design) Green Building Rating System BD+C, Version 3.

1.2 WORK INCLUDED

A. Furnish and install all equipment insulation, vapor barriers, jackets, finishes, adhesives, cements and accessories to make a complete and insulated system of all equipment, flanges and accessories as specified herein.

B. All insulation system materials shall conform to the maximum flame spread/smoke developed ratings specified herein.

C. Where equipment has removable heads, then insulation shall have removable insulated covers. Do not cover any equipment nameplates.

D. Insulate the following

1. All equipment and accessories shall be insulated as herein specified.

2. Heat exchangers, expansion and compression tanks, air separators; emergency generator piping in its entirety.

3. Flash tanks. Boiler breeching(s).

4. Condensate pump receivers. Deaerator and surge tanks. Blowdown tank.

5. Pressure reducing valves.

1.3 RELATED SECTIONS

A. Examine all drawings and criteria sheets and all other Sections of the Specifications for requirements which affect work under this Section whether or not such work is specifically mentioned in this Section.

B. Section 017419 “Construction Waste Management and Disposal” for requirements related to construction waste management and disposal at the project site.

C. Section 018113 “VOC Limits for Adhesives, Sealants, Paints and Coatings” for restrictions of VOC in adhesives, sealants, paints and coatings.

D. Section 018119 “Construction Indoor Air Quality (IAQ) Management” for requirements during construction for indoor-air-quality management.

1.4 REFERENCES

A. Applicable provisions of the following Codes and Trade Standard Publications shall apply to the work of this Section, and are hereby incorporated into, and made a part of the Contract Documents.

B. Material standards shall be as specified or detailed hereinafter and as follows:

1. ASTM A 666 – Standard Specification for Austenitic Stainless Steel Sheet, Strip, Plate and Flat Bar.

2. ASTM B 209 – Standard Specification for Aluminum and Aluminum-Alloy Steel and Plate.

3. ASTM B 209M – Standard Specification for Aluminum and Aluminum-Alloy Sheet and plate (Metric).

4. ASTM C 177 – Standard Test Method for Steady-State Heat Flux Measurements and Thermal Transmission Properties by

5. Means of the Guarded Hot Plate Apparatus

6. ASTM C 195 – Standard Specification for Mineral Fiber Thermal Insulating Cement.

7. ASTM C 240 – Standard Test Methods of Testing Cellular Glass Insulation Block.

8. ASTM C 449/C 449M – Standard Specification for Mineral Fiber Hydraulic-Setting Thermal Insulating and Finishing Cement.

9. ASTM C 518 – Standard Test method for Steady-State Heat Flux Measurements and Thermal Insulating and Finishing Cement.

10. ASTM C 533 – Standard Specification for Calcium Silicate Block and Pipe Terminal Insulation.

11. ASTM C 534 – Standard Specification for Preformed Flexible Elastomeric Cellular Thermal Insulation in Sheet and Tubular Form.

12. ASTM C 552 – Standard Specification for Cellular Glass Thermal Insulation.

13. ASTM C 553 – Standard Specification for Mineral Fiber Blanket Thermal Insulation for Commercial and Industrial Applications.

14. ASTM C 592 – Standard Specification for Mineral Fiber Blanket Insulation and Blanket-Type Pipe Insulation (Metal-Mesh Covered) (Industrial Type).

15. ASTM C 612 – Standard Specification for Mineral Fiber Block and Board Thermal Insulation.

16. ASTM C 921 – Standard Practice for Determining the Properties of Jacketing Materials for Thermal Insulation.

17. ASTM D 1056 – Standard Specification for Flexible Cellular Materials – Sponge ore Expanded Rubber.

18. ASTM E 84 – Standard Test Method for Surface Burning Characteristics of Building Materials.

19. ASTM E 96 – Standard Test Methods for Water Vapor Transmission Materials.

20. NFPA 225 – Standard Method of Test of Surface Burning Characteristics of Building Materials.

21. UL 723 – Standard for Test for Surface Burning Characteristics of Building Materials.

22. ANSI/ASHRAE 90.1 - Energy Conservation in New Building Design

1.5 SUBMITTALS

A. See Section 230500 and General Conditions for additional requirements.

B. Product Data: Provide product description, thermal characteristics, list of materials and thickness for each service, and locations.

C. Manufacturer's Instructions: Indicate installation procedures that ensure acceptable workmanship and installation standards will be achieved.

D. Contractor's Installation Details

1. Submit job specific details and/or drawings indicating methods of insulating specific pieces of equipment such as but not limited to, chilled water pumps, steam turbines, condensate receivers, exposed roof-top piping, etc.

1.6 QUALITY ASSURANCE

A. All insulation materials, finishes, coatings, cements, jackets and other insulation accessories shall have minimum composite or individual fire hazard ratings as well as thickness and "C" values conforming to State Building Codes which control building construction materials that may be used on this project. Where specification requirements exceed the Code requirements, the specification shall govern.

B. Insulation for the equipment shall be composed of materials which are non-combustible and/or provide a fire resistive system of insulation which complies with the applicable Code having jurisdiction. Generally, it is required that fire hazard ratings shall not exceed the following, except as noted:

1.	Flame Spread Rating:	25 (No Exceptions)
2.	Smoke Developed Rating:	50

C. All fire hazard ratings shall be as determined by NFPA 255 "Method of Test of Surface Burning Characteristics of Building Materials", ASTM E84 or UL 723.

D. All insulation materials herein specified shall be used subject to the manufacturer's temperature limitations and their compatibility with other materials.

E. Installation of all insulation work shall be executed by a qualified Insulation Contractor who is thoroughly experienced in this particular type of work and who has adequate facilities and equipment for installation of all insulation work herein specified and who is familiar with the requirements of the Code enforcing Authorities as to fire hazard rating.

F. The finished installation shall present a neat and workmanlike appearance with all jackets smooth, with all vapor barriers sealed and intact.

1.7 REGULATORY REQUIREMENTS

A. Conform to maximum flame spread/smoke developed rating of 25/50 in accordance with ASTM E 84, NFPA 255, or UL 723.

B. Conform to local Energy code.

1.8 DELIVERY, STORAGE AND PROTECTION

A. Accept materials on site, labeled with manufacturer’s identification, product density and thickness.

B. All materials shall be stored in a dry area free from moisture and debris.

1.9 ENVIRONMENTAL REQUIREMENTS

A. Maintain ambient conditions required by manufacturers of each product.

B. Maintain temperature before, during and after installation for minimum of 24 hours.

PART 2 – PRODUCTS

2.1 GENERAL

A. MANUFACTURERS ACCEPTABLE FOR PRODUCT TYPES INDICATED CONTINGENT UPON PRODUCTS' COMPLIANCE WITH THE SPECIFICATIONS

1. Insulation:

a. Manville Corporation.
b. Owens-Corning Fiberglass Corporation.
c. Armstrong World Industries, Incorporated.
d. Certainteed Corporation.
e. Knauf

2. Mastics and adhesives:

a. Childers Products Company.
b. H. B. Fuller Company, Foster Products Division.
c. 3M Company Adhesives, Coatings and Sealers.
d. Armstrong World Industries, Incorporated.
e. Ruston Plant.
f. Chicago-Mastic
g. Insul-Coustic
h. St. Clair Rubber
i. Vimasco
j. Baldwin-Ehret-Hill

3. PVC fitting covers:

a. Manville, Corporation.
b. Ceel-Co.
c. Certainteed, Corp.
d. Cell Co. Plastics

4. Reusable covers

a. Insulation Technology, Inc

2.2 MATERIALS AND COMPONENTS

A. Calcium Silicate Block Insulation

1. Calcium silicate block insulation shall be Owens-Corning, Kaylor or Manville Thermo-12. Insulation shall have a density of 11 lbs./cu.ft., a thermal conductivity of 0.37 at 200°F mean temperature, and shall be suitable for application on surfaces which reach 1200°F.

2. All block insulation shall be applied in layers not exceeding 1 1/2 inches thick. Insulation shall be secured with wire and covered with 1/2 inch thick finishing cement. All corners of insulation shall be protected by metal corner beads.

3. Nameplates and inspection stamps shall not be covered. 26 gauge galvanized metal collars shall be provided at manhole and openings for controls and nameplates and stamps and the covering shall be neatly finished thereto.

B. Insulkote

1. Insulkote ST as manufactured by Manville, shall be applied on dry cement (no primer is required). Hexagonal wire mesh reinforcement shall be used. Troweling should be done firmly to make sure the coating is thoroughly forced through the mesh. Material shall not be applied in thicknesses greater than 1/8 inch. Application to a greater thickness may cause slumping while there is still solvent in the coating.

2. Wire mesh reinforcement shall be provided.

3. Insulation material and application shall be in strict accordance with the manufacturer's procedures and recommendations.

C. Rigid Fiberglass Board Insulation

1. Rigid fiberglass board insulation shall be equal to Owens-Corning Fiberglas 25 with ASJ having an approximate density of 6 lbs./cu.ft. and an approximate thermal conductivity of 0.25 at 75°F.

2. Equipment having sharp bend shall have the insulation scored as required to conform to the curved surfaces to provide a neat and workmanlike appearance when finished.

3. All insulation edges and joints shall be sealed with a fire retardant vapor barrier adhesive, reinforced with a vapor barrier tape similar to that of the board facing. Tape shall be 3 to 5 inches wide as recommended by the particular manufacturer.

2.3 INSULATION FACING

A. Code ASJ: All service jacket composed of high intensity white chemically treated Kraft paper reinforced with fiberglass yarn and mesh and laminated to aluminum foil with a fire retardant adhesive. Longitudinal laps and butt strips shall be a minimum of 3 inches.

B. Code FSKL: 0.35 mil aluminum foil reinforced with fiberglass yarn reinforcing scrim and laminated to chemically treated fire resistive Kraft paper having a minimum 35 pound per inch width tensile strength when tested in accordance with ASTM D 828. Water vapor permeability 0.04 perms. Longitudinal laps and butt strips shall be a minimum of 3 inches.

2.4 ADDITIONAL INSULATION JACKET

A. ADJ-1: Approximately 6 ounce per square yard glass cloth jacket with thread count of 5 strands per square inch.

B. ADJ-2: Approximately 2 ounce per square yard glass cloth jacket with thread count of 10 strands by 10 strands per square inch. Jacket shall be used for covering pipe and pipe fittings.

C. ADJ-3a: 0.016 inch thick embossed aluminum jacket conforming to ASTM B-209 with a 1 mil factory applied polykraft moisture barrier. Longitudinal joints shall be placed at the side of the pipe facing downward at either the 4 o'clock or 8 o'clock position so as to shed water. Aluminum fitting covers, two piece elbows, tees, valve and flange covers, etc., with a 1 mil polykraft or acrylic vapor barrier.

D. ADJ-3b: 0.020 inch thick embossed aluminum jacket confirming to ASTM B-209 with a 1 mil factory applied polykraft moisture barrier. Longitudinal joints shall be placed at the side of the pipe facing downward at either the 4 o'clock or 8 o'clock position so as to shed water. Aluminum fitting covers, two piece elbows, tees, valve and flange covers, etc., with a 1 mil polykraft or acrylic vapor barrier.

E. ADJ-4: 20 mil PVC jacket suitable for all types of paint. Similar to Manville Zeston 25/50.

F. ADJ-5: shall be a Cell-Co plastic jacket with the following color coded pattern:

1.	Steam (HP/LP):	White	
2.	Condensate (Pump/Gravity):		White
3.	Hot Water System:		Orange
4.	Chilled Water System:	Blue	
5.	Condenser Water System:		Green
6.	Vent:		Black
7.	City Water:		Gray
8.	Fuel Oil:		Yellow
9.	Engine Exhaust & Breeching:		Brown
10.	Glycol Heat Recovery Water:		Orange
11.	Process Cooling Water:	Green	
12.	Other		Yellow-green

G. ADJ-6 A finish jacket of an Asbestos-free and woven as high temperature, heat-resistant fabric. Lagging Cloth having a treated weight of 24 oz./sq.yd. Material shall be suitable for a sustained operation at 1100°F.

H. ADJ-7 0.16-inch thick type T-316 stainless steel jackets. Alloys shall form to ASTM A-240. System shall have a 3-mil polycraft barrier.

2.5 ADHESIVES

A. Code ADH-1: Fibrous adhesive, non-flammable, quick setting adhesive for calcium silicate. Similar to Childers CP-97, 98.

B. Code ADH-2: Fast-drying vinyl base coating and lagging adhesive. Similar to Childers CP-50A HV2.

C. Code ADH-3: Fast-drying neoprene base adhesive for lap joints of foil-faced facing applied over pipe insulation. Similar to Childers CP-82.

D. Code ADH-4: Adhesive for use in adhering fiberglass board or blanket insulation to pipe and equipment. 3M Company Insulation Adhesive No. 35 or 38 non-flammable adhesive.

2.6 CAULKING COMPONENTS

A. Code CC-1: For use with foam glass and/or joint sealant applications. Flexible elastomeric vapor barrier sealant.

2.7 MASTICS

A. Code MAS-1: Vapor barrier mastic made with an elastomeric resin. For indoor use.

B. Code MAS-2: A non-water vapor barrier asphaltic emulsion coating, breathing type, for above ground installations. Similar to Childers CP-10.

C. Code MAS-3: Vapor barrier mastic made with an elastomeric resin. For outdoor use.

2.8 TIE WIRE

A. Tie wire for securing insulation in place shall be type 304 stainless steel annealed steel wire of gauge and proper spacing as recommended by the insulation manufacturer. Wire shall be drawn up tightly enough to become embedded in the insulation and the ends of the loop twisted, bent over, and pressed into the insulation so as to leave no ends protruding.

2.9 BANDING

A. 3/8 inch x 0.02 inch type 304 stainless steel for pipe insulation.

B. 3/4 inch x 0.02 inch type 304 stainless steel for additional insulation jackets.

2.10 WIRE MESH

A. Wire mesh shall be one inch by No. 20 BGW hexagonal mesh galvanized.

B. Expanded metal: Expanded metal shall be 1/2 inch Hi-Rib metal lath of copper bearing steel.

2.11 TAPE

A. Lead foil tape, where specified, shall be 3M Company Lead Foil Tape No. 422, 4 mil thick, acrylic adhesive, 2 inch wide.

B. Vinyl plastic tape, silver gray, flame resistant, vapor barrier sealant tape on rigid and flexible insulation material for warm or cold air ducts. Similar to 3M Company Duct Sealing Tape No. 474.

C. Aluminum foil tape, dead soft aluminum foil, point seal on stick pin, metal patching, moisture barrier, heat reflecting and general sealing on aluminum facing foil. Similar to 3M Company Aluminum Foil Tape No. 425.

2.12 STAPLES

A. Staples shall be galvanized clad outward clinching insulation staples.

2.13 INSULATING CEMENT

A. Insulating cement shall be a mineral-fiber (wool) ASTM C 195 base material having essentially the same insulating characteristics as the adjacent insulation. Similar to PABCO High Temperature Insulating Cement. Insulating cement shall be applied in layers to a maximum thickness of 1/2 inch at one time. Each layer shall be allowed to dry thoroughly before subsequent layers are applied.

2.14 FINISHING CEMENT

A. Finishing cement ASTM C 449 shall be diatomaceous silica thermal insulating materials with a suitable proportion of heat resistant binder, hydraulic setting insulating cement capable of withstanding maximum temperature of 700 degrees Fahrenheit. When mixed with water it shall be a plastic mix suitable for trowel applications and shall present a hard, smooth and durable surface after drying. Similar to PABCO No. 127.

B. Combination insulating and finishing cement:

C. Similar to Ryder One Coat or equal.

2.15 WELDING STUDS

A. Welding studs shall be capacitor type split pin or TCP tipped insulation pins with speed clips. Similar to Nelson Stud Welding Spec. 28.

2.16 ACCESSORIES AND FASTENING MATERIALS

A. Corner angles on insulation of equipment in finished areas shall be formed of 28 gauge, 1 inch by 1 inch aluminum adhered to heavy Kraft paper having 2 inch by 2 inch by 2 inch wings to protect external corners under cloth jackets.

2.17 REMOVABLE/REUSABLE INSULATION COVERS

A. Pressure reducing valves operating above 200°F shall be insulated with reusable insulation covers as described in this specification.

B. The materials, construction techniques and methods of application described in this specification are for conservation of heat, ease of maintenance and personnel protection.

C. Reusable insulation covers shall be custom built and shall conform to the shape of the fitting or valve being insulated.

D. Identification of reusable covers shall be by means of a permanently attached, stainless steel tag secured to the outer surface of the cover. The identification legend, which shall be mechanically embossed on the tag, shall locate the fitting the cover was designed for. It shall also contain information adequate to reorder the cover from the manufacturer.

E. Reusable covers shall be similar to Insulation Technology, Inc., Heat Holder LD-1000, 2 inch thick fiber glass mat insulation. LD-1000 shall be an off-white color, have non-combustible wool with long, resilient, inorganic glass fibers, and shall be bonded with a thermosetting resin. Insulation shall be encased in an inner and outer jacket of 550T Teflon impregnated fiberglass fabric suitable for temperatures up to 500°F. Fabric shall weigh a minimum of 14 oz./sq.yd. and have a nominal thickness of 0.013 inch. Fabric shall also pass UL 214 Flammability Test. Fabric color shall be gray.

F. Covers shall be sewn simultaneously with (2) parallel rows of double sewn seams of (10) stitches per inch. Stainless steel quilting pins and hooks shall be included on each cover.

G. Covers shall be installed after adjacent pipe and fitting insulation and jacketing is in place. Covers shall be overlapped a minimum of 2 inches on pipe insulation. Once in place, covers shall be tightened by Velcro straps sewn into each cover.

PART 3 – EXECUTION

3.1 INSTALLATION OF INSULATION

A. All insulation shall be applied by experienced Insulating Contractors in accordance with best Trade practice.

B. Do not cover vent petcocks, grease fittings or other maintenance points on equipment unless identified on the insulation with removable access panels or covers.

C. No equipment nameplates shall be covered. The insulation shall be cut back and a 26 galvanized "picture frame" installed to accept the abutting edges of the insulation to leave the nameplate data exposed to view.

D. Test, inspect and clean all surfaces to be insulated before applying insulation.

E. Take all possible precautions to protect work of other Trades. Provide protective covering as required to accomplish this end. This Trade shall be responsible for returning all equipment and material to its original new condition and appearance where damage occurs due to his neglect.

F. All equipment and accessories shall have been tested and approved prior to installation of insulation.

G. All equipment surfaces, where subject to condensation or heat loss on the outside, shall be insulated.

H. All surfaces to be insulated shall be clean, dry and free from rust and scale when insulation is being applied. Insulation shall be dry at the time of installation and before and during the process of finished application.

I. Butt ends will not be allowed. However, where required and approved by Architect, jacket material shall be pasted over exposed ends and banded to give a neat and finished appearance. Exposed insulation material will not be permitted.

J. Surfaces or insulation shall be smooth, even and true to line with jackets drawn tight and smoothly secured. Scrap pieces of insulation shall not be used as filler pieces.

K. The methods of application of insulation, finishes, adhesives, cements, accessories are generally specified under the material headings of these specifications. Where not specifically detailed, it is intended that they are equal or exceed the manufacturer's published recommendations, existing at time of bid openings, subject to the approval of the Architect.

L. Butt covering neatly to walls, floors, ceiling. Apply band at end and position so band covers gap between surface and insulation where exposed.

M. Fastenings: Provide where required to securely hold insulation.

N. Thickness of insulation shall not be compromised due to interferences, improper installation or any other reason.

PART 4 – SCHEDULES

4.1 EQUIPMENT INSULATION SCHEDULE

Service	Type Insulation and Thickness (Inches)	Facing	Additional Jacket

Service	Type Insulation and Thickness (Inches)	Facing	Additional Jacket
All Expansion, Compression Tanks and Air Separators	Calcium Silicate Block 1		ADJ-6
Flash Tanks and Condensate Tanks,	Calcium Silicate Block 3		ADJ-6
Hot water pumps	Fiberglass 3		Same as piping
Emergency Generator Mufflers	Calcium Silicate Block 3		ADJ-3b
Emergency Generator exhaust	Calcium Silicate Block 3		ADJ-3b
Tanks	Calcium Silicate Block 3		ADJ-6
Chilled Water Pumps	Armaflex 3	Formed Covers w/Velcro Fastening	Same as piping
Pressure Reducing Valves	Custom Cover Fiberglass Mat 2	Heat-Holder LD-1000	
Other	Fiberglass 3	FSKL	Same as piping

A. HVAC Insulation Schedule Notes

1. Refer to jacket specifications for finish covering to be installed on calcium silicate insulation in finished areas.

2. Where "Finishing Cement" finishes are scheduled, refer to specifications for Cement herein for materials, method of application, thickness, etc.

END OF SECTION

SECTION 23 0719 – HVAC PIPING INSULATION

PART 1 – GENERAL

1.1 RELATED DOCUMENTS

A. Drawings and general provisions of the Contract, including General and Supplementary Conditions, Section 230500 and other Division 1 Specification Sections, apply to this Section.

B. LEED Building General Requirements: The Owner requires the Contractor to implement practices and procedures to meet the project's environmental performance goals, which include achieving LEED Certification. Specific project goals that may impact this area of work include: Use of recycled-content materials; use of locally-manufactured materials; use of low-emitting materials; construction waste recycling; and the implementation of a construction indoor air quality management plan. The Contractor shall ensure that the requirements related to these goals, as defined in the sections below, are implemented to the fullest extent. Substitutions, or other changes to the work proposed by the Contractor or their Subcontractors, shall not be allowed if such changes compromise the stated LEED Building Performance Criteria.

1. Comply with LEED (Leadership in Energy and Environmental Design) Green Building Rating System BD+C, Version 3.

1.2 WORK INCLUDED

A. Furnish and install all piping insulation, vapor barriers, jackets, finishes, adhesives, cements and accessories to make a complete insulated system for all piping, valves, fittings, joints, offsets and flanges specified herein.

B. All insulation system materials shall conform to the maximum flame spread/smoke developed ratings specified herein.

C. Hard insulation material shall be provided at all hangers.

D. Insulate the following:

1. All scheduled piping, all valves, fittings, elbows, flanges and accessories.

2. All piping exposed to weather including provision of additional weatherproof jacket.

3. All cold water make-up piping and valves. All drain and overflow piping receiving cold water. Piping to/from expansion/compression tanks.

4. All vents and blow-offs in mechanical rooms and elsewhere within reach of personnel.

5. Emergency generator piping and entire exhaust systems.

6. Piping jacket covers.

7. All heat traced piping.

1.3 RELATED SECTIONS

A. Examine all drawings and criteria sheets and all other Section of the Specifications for requirements which affect work under this Section whether or not such work is specifically mentioned in this Section.

B. Section 017419 "Construction Waste Management and Disposal" for requirements related to construction waste management and disposal at the project site.

C. Section 018113 "VOC Limits for Adhesives, Sealants, Paints and Coatings" for restrictions of VOC in adhesives, sealants, paints and coatings.

D. Section 018119 "Construction Indoor Air Quality (IAQ) Management" for requirements during construction for indoor-air-quality management.

1.4 REFERENCES

A. Applicable provisions of the following Codes and Trade Standard Publications shall apply to the work of this Section, and are hereby incorporated into, and made a part of the Contract Documents.

B. Material standards shall be as specified or detailed hereinafter and as follows:

1. ASTM A 666 – Standard Specification for Austenitic Stainless Steel Sheet, Strip, Plate and Flat Bar.

2. ASTM B 209 – Standard Specification for Aluminum and Aluminum-Alloy Steel and Plate.

3. ASTM B 209M – Standard Specification for Aluminum and Aluminum-Alloy Sheet and plate (Metric).

4. ASTM C 177 – Standard Test Method for Steady-State Heat Flux Measurements and Thermal Transmission Properties by Means of the Guarded Hot Plate Apparatus.

5. ASTM C 195 – Standard Specification for Mineral Fiber Thermal Insulating Cement.

6. ASTM C 240 – Standard Test Methods of Testing Cellular Glass Insulation Block.

7. ASTM C 449/C 449M – Standard Specification for Mineral Fiber Hydraulic-Setting Thermal Insulating and Finishing Cement.

8. ASTM C 518 – Standard Test method for Steady-State Heat Flux Measurements and Thermal Insulating and Finishing Cement.

9. ASTM C 533 – Standard Specification for Calcium Silicate Block and Pipe Terminal Insulation.

10. ASTM C 534 – Standard Specification for Preformed Flexible Elastomeric Cellular Thermal Insulation in Sheet and Tubular Form.

11. ASTM C 547 – Standard Specification for Mineral Fiber Pipe Insulation.

12. ASTM C 552 – Standard Specification for Cellular Glass Thermal Insulation.

13. ASTM C 578 – Standard Specification for Preformed, Cellular Polystyrene Thermal Insulation.

14. ASTM C 591 – Standard Specification for Unfaced Preformed Rigid Cellular Polyisocyanurate Thermal Insulation.

15. ASTM C 610 – Standard Specification for Molded Expanded Perlite Block and Pipe Thermal Insulation.

16. ASTM C 795 – Standard Specification for Thermal Insulation for Use in Contact with Austenitic Stainless Steel.

17. ASTM C 921 – Standard Practice for Determining the Properties of Jacketing Materials for Thermal Insulation.

18. ASTM D 1056 – Standard Specification for Flexible Cellular Materials – Sponge ore Expanded Rubber.

19. ASTM D 1667 – Standard Specification for Flexible Cellular Materials – vinyl Chloride Polymers and Copolymers (Closed-Cell Foam).

20. ASTM D 1784 – Standard Specification for Rigid Poly (Vinyl Chloride) (PVC) Compounds and Chlorinated Poly (Vinyl Chloride) (CPVC) Compounds.

21. ASTM D 2842 – Standard Test Method for Water Absorption of Rigid Cellular Plastics.

22. ASTM E 84 – Standard Test Method for Surface Burning Characteristics of Building Materials.

23. ASTM E 96 – Standard Test Methods for Water Vapor Transmission Materials.

24. NFPA 225 – Standard Method of Test of Surface Burning Characteristics of Building Materials.

25. UL 723 – Standard for Test for Surface Burning Characteristics of Building Materials.

26. ANSI/ASHRAE 90.1 – Energy Conservation in New Buildings.

1.5 SUBMITTALS

A. See Section 230500 and General Conditions for additional requirements.

B. Product Data: Provide product description, thermal characteristics, list of materials and thickness for each service, and locations.

C. Manufacturer's Instructions: Indicate installation procedures that ensure acceptable workmanship and installation standards will be achieved.

D. Installation Graphic Details.

1.6 QUALITY ASSURANCE

A. All insulation materials, finishes, coatings, cements, jackets and other insulation accessories shall have minimum composite or individual fire hazard ratings as well as thickness and "C" values conforming to State Building Codes which control building construction materials that may be used on this project. Where specification requirements exceed the Code requirements, the specification shall govern.

B. Piping insulation for the various piping systems and associated equipment shall be composed of materials which are non-combustible and/or provide a fire resistive system of insulation which complies with the applicable Code having jurisdiction. Generally, it is required that fire hazard ratings shall not exceed the following, except as noted:

1. Flame Spread Rating 25 (No Exceptions)
2. Smoke Developed Rating: 50

C. All fire hazard ratings shall be as determined by NFPA 255 "Method of Test of Surface Burning Characteristics of Building Materials", ASTM E84 or UL 723.

D. All insulation materials herein specified shall be used subject to the manufacturer's temperature limitations and their compatibility with other materials.

E. Installation of all insulation work shall be executed by a qualified Insulation Contractor who is thoroughly experienced in this particular type of work and who has adequate facilities and equipment for installation of all insulation work herein specified and who is familiar with the requirements of the Code enforcing Authorities as to fire hazard rating.

F. The finished installation shall present a neat and workmanlike appearance with all jackets smooth, with all vapor barriers sealed and intact.

G. Where insulation is specified for piping, insulate similarly all connections, vents, drains and any piping connected to system subject to heat loss or gain. Do not cover vent petcocks, cleanouts or other maintenance points on equipment unless identified on the insulation with removable access panels or covers.

H. All chilled water system piping, components and accessories are to be insulated in a manner so as to provide a complete, uninterrupted vapor barrier.

1.7 REGULATORY REQUIREMENTS

A. Conform to maximum flame spread/smoke developed rating of 25/50 in accordance with ASTM E 84, NFPA 255, or UL 723.

1.8 DELIVERY, STORAGE AND PROTECTION

A. Accept materials on site, labeled with manufacturer's identification, product density and thickness.

B. All materials shall be stored in a dry area free from moisture and debris.

1.9 ENVIRONMENTAL REQUIREMENTS

A. Maintain ambient conditions required by manufacturers of each product.

B. Maintain temperature before, during and after installation for minimum of 24 hours.

PART 2 – PRODUCTS

2.1 MANUFACTURERS ACCEPTABLE FOR PRODUCT TYPES INDICATED CONTINGENT UPON PRODUCTS' COMPLIANCE WITH THE SPECIFICATIONS

A. Insulation:

1. Manville Corporation.
2. Owens-Corning Fiberglass Corporation.
3. Armstrong World Industries, Incorporated.
4. Certainteed Corporation.
5. Knauf

B. Elastomeric insulation

1. Armacell

C. Mastics and adhesives:

1. Childers Products Company.
2. H. B. Fuller Company, Foster Products Division.
3. 3M Company Adhesives, Coatings and Sealers.
4. Armstrong World Industries, Incorporated.
5. Ruston Plant.
6. Chicago-Mastic
7. Insul-Coustic
8. St. Clair Rubber
9. Vimasco
10. Baldwin-Ehret-Hill

D. Pipe insulation of hanger and support:

1. Pipe Shields, Inc.
2. Rilco Manufacturing Company.
3. Elcen Metal Products Company.
4. Power Piping Company.
5. NPS Industries.

E. PVC fitting covers:

1. Manville, Corporation.
2. Ceel-Co.
3. Certainteed, Corp.
4. Cell Co. Plastics

2.2 GENERAL

A. Adhesives and insulation materials: Composite fire and smoke hazard ratings maximum 25 for flame spread and 50 for smoke developed for pipe insulation. Adhesives to be waterproof when cured.

B. The installation of thermal insulating materials coverings and coatings containing asbestos fibers is forbidden.

C. Insulation shall not be chemically reactive to the metal over which it is applied. Insulation installed on steel shall be neutral or slightly alkaline. Insulation installed on aluminum shall be neutral or slightly acidic.

2.3 MATERIALS AND COMPONENTS

A. Fiberglass insulation:

1. Premolded pipe fiberglass: Recommended temperature to 850 degrees Fahrenheit with facing. Molded in one piece split or hinged circular sections in three foot lengths for piping and tubing. Insulation shall be made from long, fine, glass fibers bonded together with a thermosetting resin. Insulation shall have a minimum density of 4.0 pounds per cubic foot and a K value of 0.23 at 75 degrees Fahrenheit mean temperature. Insulation furnished with facing as

specified below and as indicated in insulation schedule. Insulation similar to Owens-Corning Type SSL-II. Pressure sensitive tapes using rubber based or acrylic based adhesives are not permitted.

2. Pipe and tank fiberglass: Recommended temperature to 450 degrees F with facing. Insulation shall be made from long, fine, glass fibers bonded together with a thermosetting resin. Insulation shall have a minimum density of 3 pounds per cubic foot and a k-valve of 0.27 btu in/(Hr sq.ft. degree F) at 75 degrees F main temperature. Insulation furnished with facing as specified below and as indicated in insulation schedule. Insulation similar to Manville pipe and tank insulation. Pressure sensitive tapes using rubber based or acrylic based adhesives are not permitted.

3. Flexible fiberglass: Recommended temperature to 250 degrees Fahrenheit. Glass fibrous flexible blanket insulation having density of 0.75 pounds per cubic foot and a K value of 0.30 at 75 degrees mean temperature. Insulation furnished with facing as specified below and indicated in insulation schedule. Insulation and jacket similar to Owens-Corning Type SSL-II.

4. Use pipe and tank fiberglass only when premolded pipe fiberglass is not available. Pipe and tank insulation shall not be used on pipe sizes 24 inches and smaller.

B. Hydrous Calcium Silicate Pipe Insulation

1. Molded, rigid, asbestos free, hydrous calcium silicate water resistant pipe insulation shall be Owens-Corning Fiberglas Kaylo 10 or Manville Thermo-12, molded to dimensional standards conforming to the pipe. Insulation shall have an approximate density of 11 lbs./cu.ft., an approximate thermal conductivity of 0.41 at 200°F mean temperature and shall be suitable for application on surfaces which reach 1200°F. Additional jacket, as hereinafter specified, shall be applied in the field. This material shall be used in finished and concealed areas. In all areas, insulation shall have all joints made with an approved insulation cement to prevent heat leakage through joints. Insulation shall be secured by wire on 9 inch centers.

2. Valves, flanges and fittings occurring in lines insulated with calcium silicate insulation shall be covered with fabricated, mitered segments of molded calcium silicate of thickness equal to insulation on adjacent pipe, wired in place and made smooth with a thin coat of insulating cement. Fittings on pipes 2 inches and smaller may be insulated with insulating cement to a thickness equal to that of adjacent pipe insulation. All fittings shall be finished with glass fabric embedded in fire retardant adhesive

C. Equipment insulation:

1. Rigid fiberglass: Recommended temperature to 450 degrees F. Fiberglass rigid board having a density of 3.0 pounds per cubic foot and a K value of 0.23 at 75 degrees F mean temperature. See schedule for facing type.

2. Flexible fiberglass: Recommended temperature to 250 degrees F with facing. Glass fibrous flexible blanket insulation having a density of 0.75 pounds per cubic foot and a K value of 0.30 at 75 degrees F mean temperature.

3. Rigid fiberglass high temperature: Recommended temperature to 850 degrees Fahrenheit. Fiberglass high temperature board having a density of 3 pounds per cubic foot and a K value of 0.30 at 200 degrees Fahrenheit mean temperature.

D. Closed-Cell Elastomeric

1. Insulation material shall be a flexible, closed-cell elastomeric insulation.

2. This product meets the requirements as defined in ASTM C 534.

3. Insulation materials shall have a closed-cell structure to prevent moisture from wicking which makes it an efficient insulation.

4. Insulation material shall be manufactured without the use of CFC's, HFC's or HCFC's.

5. Insulation material shall be formaldehyde free, low VOC's, fiber free, dust free and resists mold and mildew.

6. Materials shall have a flame spread index of less than 25 and a smoke-developed index of less than 50 when tested in accordance with ASTM E 84, latest revision.

7. In addition, the product, when tested, shall not melt or drip flaming particles, the flame shall not be progressive and all materials shall pass simulated end-use fire tests.

8. Materials shall have a maximum thermal conductivity of 0.27 Btu-in./h-ft2- °F at a 75°F mean temperature when tested in accordance with ASTM C 177 or ASTM C 518, latest revisions. F. Materials shall have a maximum water vapor transmission of 0.08 perm-inches when tested in accordance with ASTM E 96, Procedure A, latest revision.

E. Insulation facing:

1. Code ASJ: All service jacket composed of high intensity white chemically treated Kraft paper reinforced with fiberglass yarn and mesh and laminated to aluminum foil with a fire retardant adhesive. Longitudinal laps and butt strips shall be a minimum of 3 inches.

2. Code FSKL: 0.35 mil aluminum foil reinforced with fiberglass yarn reinforcing scrim and laminated to chemically treated fire resistive Kraft paper having a minimum 35 pound per inch width tensile strength when tested in accordance with ASTM D 828. Water vapor permeability 0.04 perms. Longitudinal laps and butt strips shall be a minimum of 3 inches.

F. Additional insulation jacket:

1. ADJ-1: Approximately 6 ounce per square yard glass cloth jacket with thread count of 5 strands per square inch.

2. ADJ-2: Approximately 2 ounce per square yard glass cloth jacket with a thread count of 10 strands by 10 strands per square inch. Jacket shall be used for covering pipe and pipe fittings.

3. ADJ-3a: 0.016 inch thick aluminum jacket conforming to ASTM B-209 with a 1 mil factory applied polykraft moisture barrier. Longitudinal joints shall be placed at the side of the pipe facing downward at either the 4 o'clock or 8 o'clock position so as to shed water. Aluminum fitting covers, two piece elbows, tees, valve and flange covers, etc., with a 1 mil polykraft or acrylic vapor barrier.

4. ADJ-3b: 0.020 inch thick aluminum jacket conforming to ASTM B-209 with a 3 mil factory applied polykraft moisture barrier. Longitudinal joints shall be placed at the side of the pipe facing downward at either the 4 o'clock or 8 o'clock position so as to shed water. Aluminum fitting covers, two piece elbows, tees, valve and flange covers, etc., with a 3 mil polykraft or acrylic vapor barrier.

5. ADJ-4: 20 mil PVC jacket suitable for all types of paint. Similar to Manville Zeston 25/50.

6. ADJ-5: shall be a Cell-Co plastic jacket with the following color coded pattern:

a.	Steam (HP/LP):	White
b.	Condensate (Pump/Gravity):	White
c.	Hot Water:	Orange
d.	Chilled Water:	Blue
e.	Condenser Water:	Green
f.	Vent:	Black
g.	City Water:	Gray
h.	Fuel Oil:	Yellow
i.	Engine Exhaust & Breeching:	Brown
j.	Glycol Heat Recovery Water:	Orange
k.	Process Cooling Water: Green	
l.	Other	Yellow-green

7. ADJ-6 A finish jacket of an Asbestos-free and woven as high temperature, heat-resistant fabric. Lagging Cloth having a treated weight of 24 oz./sq.yd. Material shall be suitable for a sustained operation at 1100°F. Calcium silicate piping for generator exhaust piping shall also be jacketed with corrugated aluminum.

8. ADJ-7: 0.16-inch thick type T-316 stainless steel jacket. Alloys conforming to ASTM A-240. System shall have a 3-mil polykraft vapor barrier.

G. Adhesives:

1. Code ADH-1: Fibrous adhesive, non-flammable, quick setting adhesive for calcium silicate. Similar to Childers CP-97, 98.

2. Code ADH-2: Fast-drying vinyl base coating and lagging adhesive. Similar to Childers CP-50A HV2.

3. Code ADH-3: Fast-drying neoprene base adhesive for lap joints of foil-faced facing applied over pipe insulation. Similar to Childers CP-82.

4. Code ADH-4: Adhesive for use in adhering fiberglass board or blanket insulation to pipe and equipment. 3M Company Insulation Adhesive No. 35 or 38 non-flammable adhesive.

H. Caulking components:

1. Code CC-1: For use with foam glass and/or joint sealant applications. Flexible elastomeric vapor barrier sealant.

I. Mastics:

1. Code MAS-1: Vapor barrier mastic made with an elastomeric resin. For indoor use.

2. Code MAS-2: A non-water vapor barrier asphaltic emulsion coating, breathing type, for above ground installations. Similar to Childers CP-10.

3. Code MAS-3: Vapor barrier mastic made with an elastomeric resin. For outdoor use.

J. Tie wire:

1. Tie wire for securing insulation in place shall be type 304 stainless steel annealed steel wire of gauge and proper spacing as recommended by the insulation manufacturer. Wire shall be drawn up tightly enough to become embedded in the insulation and the ends of the loop twisted, bent over, and pressed into the insulation so as to leave no ends protruding.

K. Banding:

1. 3/8 inch x 0.02 inch type 304 stainless steel for pipe insulation.

2. 3/4 inch x 0.02 inch type 304 stainless steel for additional insulation jackets.

L. Wire mesh:

1. Wire mesh shall be one inch by No. 20 BGW hexagonal mesh galvanized.

2. Expanded metal: Expanded metal shall be 1/2 inch Hi-Rib metal lath of copper bearing steel.

M. Tape:

1. Lead foil tape shall be 3M Company Lead Foil Tape No. 422, 4 mil thick, acrylic adhesive, 2 inch wide.

2. Vinyl plastic tape, silver gray, flame resistant, vapor barrier sealant tape on rigid and flexible insulation material for warm or cold air ducts. Similar to 3M Company Duct Sealing Tape No. 474.

3. Aluminum foil tape, dead soft aluminum foil, point seal on stick pin, metal patching, moisture barrier, heat reflecting and general sealing on aluminum facing foil. Similar to 3M Company Aluminum Foil Tape No. 425.

N. Staples:

1. Staples shall be galvanized clad outward clinching insulation staples.

O. Insulating cement:

1. Insulating cement shall be a mineral-fiber (wool) ASTM C 195 base material having essentially the same insulating characteristics as the adjacent insulation. Similar to PABCO High Temperature Insulating Cement. Insulating cement shall be applied in layers to a maximum thickness of 1/2 inch at one time. Each layer shall be allowed to dry thoroughly before subsequent layers are applied.

P. Finishing cement:

1. Finishing cement ASTM C 449 shall be diatomaceous silica thermal insulating materials with a suitable proportion of heat resistant binder, hydraulic setting insulating cement capable of withstanding maximum temperature of 700 degrees Fahrenheit. When mixed with water it shall be a plastic mix suitable for trowel applications and shall present a hard, smooth and durable surface after drying. Similar to PABCO No. 127.

Q. Combination insulating and finishing cement:

1. Similar to Ryder One Coat or equal.

R. Welding studs:

1. Welding studs shall be capacitor type split pin or TCP tipped insulation pins with speed clips. Similar to Nelson Stud Welding Spec. 28.

PART 3 – EXECUTION

3.1 PREPARATION

A. No insulation shall be applied until the surfaces of the equipment to be insulated are thoroughly cleaned and until pipes and equipment to be insulated have been leak tested and proven tight and accepted by THE ENGINEER.

B. Insulation shall not be applied to piping or equipment until authorization is given to the Contractor by THE ENGINEER. Contractor shall submit a request for authorization. If any insulation is applied without first obtaining authorization, it will be the Contractor's responsibility to remove the insulation and apply it again if so directed.

C. Ensure surface is clean and dry prior to installation. Ensure insulation is dry before and during application. Finish with systems at operating conditions.

D. The execution of the insulation work shall be in strict accordance with the best practices of the trade and with the specifications.

E. The insulation shall be handled and applied in a manner that will not adversely affect its structural or insulating properties.

F. The installation instructions provided by the insulation material manufacturer of all materials specified in this Section shall be followed when installing these materials. Where the specifications are in conflict with manufacturers' instructions, such conflicts shall be brought to the attention of the ENGINEER for a decision.

G. Welding operations will not be permitted on certain specific items of equipment, piping and components for the application of studs, pins, support rings, angles, etc. Contractor shall obtain permission in writing from THE ENGINEER to perform any welding.

H. Coat to seal all insulating cement and calcium silicate surfaces with primer similar to Childers CP-53 or equal before applying any mastic coating.

3.2 PIPING INSULATION INSTALLATION

A. Ensure insulation is continuous through interior walls. Pack around pipes with fire proof self-supporting insulation material, fully sealed. Insulation on all cold surfaces where vapor barrier jackets are specified must be applied with a continuous, unbroken vapor seal. Hangers, supports, anchors, and other heat conductive parts that are secured directly to cold surfaces must be adequately insulated and vapor sealed to prevent condensation.

B. Insulate fittings, valves, unions, flanges, and strainers. Do not insulate flexible connections and expansion joints. Terminate insulation neatly with PVC or aluminum end caps.

C. Pre-molded fiberglass insulation for straight pipes shall be applied, neatly fitted around piping and sealed with adhesive ADH-3. Adhesive shall be applied to only one side of each joint and shall not be applied to the pipe surface.

D. Where two sections of pipe insulation butt together provide a 3 inch wide butt strip of same facing material as adjacent insulation facing. Adhere neatly in place using adhesive ADH-3.

E. All pipe elbows shall be insulated with short radial and mitered pieces of board or block insulation or pre-molded pieces of pipe insulation. Each piece shall be butted tightly against the adjoining piece and all joints, seams, voids and irregular surfaces shall be filled with insulating cement finished to a smooth, hard and uniform contour. Coat with MAS-1 mastic and reinforce with ADJ-2 additional jacket. In addition, place a fitted PVC cover (ADJ-4) over insulated elbow exception. Tape elbow to adjoining insulation.

F. All valves and fittings shall be insulated with pre-molded fittings, sectional pipe insulation, or blocks of the same material and thickness as used for the adjacent pipe. Flange insulation shall overlap the adjoining pipe insulation by not less than the thickness of the pipe insulation. Sectional pipe covering or block insulation shall be cut to fit, and each section butted closely to the next and held in place with tie wire.

G. Fittings on pipe lines in finished and concealed areas shall be covered with pre-molded fiberglass pipe fitting insulators Insul-Coustic or equal, where sizes are available, otherwise, use mitercut segments of molded pipe insulation, wire in place with joints and raw edges sealed with adhesive and smoothed out with a coat of insulating cement.

H. On cold pipes the fittings shall be finished with (2) coats of an approved vapor barrier mastic, reinforced with glass cloth extending 2 inches onto adjacent pipe insulation. Hot pipes shall be finished in a similar manner except the mastic need not be of the vapor barrier type.

I. Insulation shall cover the entire surface of the fittings and bodies of the valves up to and including the bonnets, and to the valve stuffing box studs, bolts, or nuts. All joints, seams, and irregular surfaces shall be filled with insulating cement. The insulated surfaces shall be covered with a 1/4 inch thick layer of finishing cement and heavily coated with vapor barrier mastic MAS-1 for cold services and mastic MAS-2 for hot services and reinforced with ADJ-2 additional jacket. Mastic shall be trowelled to a smooth and well-shaped contour compatible with adjoining pipe insulation jackets as specified.

J. Use ADJ-4 covers over fittings and flanges everywhere except when ADJ-3a, ADJ-3b, or ADJ-5 is specified.

K. Repair separation of joints or cracking of insulation due to thermal movement or poor workmanship on all joints of all piping.

L. All instrument connections for thermometers, thermocouples, gauges, test connections, flow meters, etc., on insulated pipes, vessels, or equipment shall be insulated. The insulation shall be shaped at these connections by tapering it to and around the connection with insulating cement and finishing with finishing cement, vapor barrier adhesive, applicable mastic, or caulking compound.

M. Where removable flange and valve insulation is required or specified, installation shall conform to the following:

1. Removable flange insulation shall be made from sectional pipe insulation of the same thickness as that on the adjoining pipe or from block insulation 1/2 inch thinner than the pipe insulation and finished with insulating cement. Insulation jackets shall be the same as adjoining pipe insulation unless indicated otherwise.

2. When flange covers are made from sectional pipe insulation, they shall enclose the flanges and be long enough to extend at least 2 inches over the adjacent pipe insulation on each side of the flange. The space between the flange cover and the pipe insulation shall be filled with insulating cement. Secure the flange cover in place with stainless steel banding.

3. When flange covers are made from block insulation, they shall be made in two halves. Each half shall consist of mitered blocks wired to 1/2 inch galvanized hardware cloth mesh. This wire frame, with its attached insulation, shall then be secured to the flanges with tie wire. The insulation cover shall be long enough to extend at least 2 inches over the adjacent pipe insulation on each side of the flange. The space between the flange cover and the pipe insulation shall be filled with insulating cement. The whole flange cover assembly shall be finished with 1/2 inch of insulating cement applied in two coats. After the first coat is dry, the second coat shall be trowelled to a smooth hard finish. All surfaces shall then be finished with jackets as specified in the schedule.

4. Removable valve insulation covers shall be constructed in the same manner as for flanges with the following exception; the two part section shall be divided on the vertical center line of the valve body, bonnet, flange or joint.

5. When specified to insulate the complete valve, the hand wheel or lug wrench shall be removed to accommodate the valve bonnet box. The valve bonnet box shall be constructed in a one piece closure, one end closed, one end opened to fit up to the valve body insulation. Securing the valve and bonnet box sections, sealing and pointing of the insulation shall be done in same manner as specified for flange covers.

6. Unless indicated as removable, a permanent installation as previously specified shall be used.

7. Protect insulation on piping 2 ½” and up where supported in hangers by means of calcium silicate rigid pipe insulation or jackets. Saddles or shaped galvanized steel pieces approximately 10” long by half the circumferences of insulated pipe.

8. All piping shall have been tested and approved prior to installation of insulation.

9. All piping or surfaces where subject to condensation on the outside shall be insulated including vaporseal finish.

PART 4 – SCHEDULES

4.1 PIPING INSULATION SCHEDULE: (ASJ = "All-Service-Jacket")

Service	Type Insulation and Thickness (Inches)	Facing	Additional Jacket*
MPS & HPS Steam Up to 1-1/4” 1-1/4” to 4” 5” to 16” 18” & Up	Hydrous Calcium Silicate 3 3-1/2 4 5		ADJ-6 ADJ-6 ADJ-6 ADJ-6
LPS Steam Up to 1-1/2” 1-1/2” to 6” 6” & Up	Molded Fiber Glass 1 1/2 2 3 1/2	 ASJ ASJ ASJ	
Hot Water Heating, Glycol Systems & Condensate Water Up to 2” 2 1/2” & Up	Molded Fiber Glass 1 1/2 2	 ASJ ASJ	
All Chilled Water Up to 2” 2 1/2” & Up	Molded Fiber Glass 1 1/2 2	 ASJ ASJ	
Condenser Water Up to 12” 14” & Up	Molded Fiber Glass 1 2	ASJ ASJ ASJ	
Condensation Drains & Vents, Cold Water Make-up	Molded Fiber Glass 1	 ASJ	
Blowdowns and Condensate (All Pressures) 1/2” to 2” 2 1/2” & Up	Molded Fiber Glass 1 1 1/2	 ASJ ASJ	
Emergency Generator Exhaust Piping	Hydrous Calcium Silicate 3 1/2	ADJ-6	ADJ-3b
Piping with Heat Trace	Molded Fiber Glass 3”	ASJ	ADJ-3b
All outdoor piping	Two times thickness scheduled except heat traced		ADJ-3b
All pipe within equipment room with chillers or boilers plant	As scheduled		ADJ-5
Others not scheduled	Molded Fiber Glass 1	ASJ	

*Including elbows, fittings, valves, complete system.

A. Refer to jacket specifications for finish covering to be installed on calcium silicate insulation in finished areas.

B. Where "Finishing Cement" finishes are scheduled, refer to specifications for Cement herein for materials, method of application, thickness, etc.

C. Provide vapor barrier on all cold water and rainwater piping.

D. Piping exposed to weather shall be insulated with pipe insulation using double the thicknesses scheduled hereinbefore, up to 24 inches beyond the point where pipes enter the building. Provide weatherproof jacket as hereinafter specified.

E. Equipment drains and floor drains from cooling coils as well as drinking fountain waste shall be insulated 6 feet downstream from connection point.

END OF SECTION

SECTION 23 2000 – HVAC PIPING AND JOINTS

PART 1 – GENERAL

1.1 RELATED DOCUMENTS

A. Drawings and general provisions of the Contract, including General and Supplementary Conditions, Section 230500 and other Division 1 Specification Sections, apply to this Section.

B. LEED Building General Requirements: The Owner requires the Contractor to implement practices and procedures to meet the project's environmental performance goals, which include achieving LEED Certification. Specific project goals that may impact this area of work include: Use of recycled-content materials; use of locally-manufactured materials; use of low-emitting materials; construction waste recycling; and the implementation of a construction indoor air quality management plan. The Contractor shall ensure that the requirements related to these goals, as defined in the sections below, are implemented to the fullest extent. Substitutions, or other changes to the work proposed by the Contractor or their Subcontractors, shall not be allowed if such changes compromise the stated LEED Building Performance Criteria.

1. Comply with LEED (Leadership in Energy and Environmental Design) Green Building Rating System BD+C, Version 3.

1.2 WORK INCLUDED

A. Furnish and install all steam and condensate piping, fittings, flanges, unions, bolting, gaskets, welding, and threading for all main piping network, branches and connections to all fuel fired HVAC and electrical equipment and systems to make complete and operations systems.

B. All systems shall be installed in accordance with local code including vent piping and relief discharge termination points.

C. Secure all permits and local/state approvals for the installation of all components included under this Section.

1.3 RELATED SECTIONS

A. Examine all drawings and criteria sheets and all other Sections of the Specifications for requirements which affect work under this Section whether or not such work is specifically mentioned in this Section.

B. Section 017419 "Construction Waste Management and Disposal" for requirements related to construction waste management and disposal at the project site.

C. Section 018113 "VOC Limits for Adhesives, Sealants, Paints and Coatings" for restrictions of VOC in adhesives, sealants, paints and coatings.

D. Section 018119 “Construction Indoor Air Quality (IAQ) Management” for requirements during construction for indoor-air-quality management.

1.4 REFERENCES

A. Applicable provisions of the following Codes and Trade Standard Publications shall apply to the work of this Section, and are hereby incorporated into, and made a part of the Contract Documents.

B. ASME: American Society of Mechanical Engineers

C. NFPA: National Fire Protection Association

1. NFPA 54: National Fuel Gas Code

D. ANSI: American National Standards Institute

1. A13.1: Scheme for Identification of Piping Systems

2. B16.1: Cast Iron Pipe Flanges and Flanged Fittings

3. B16.3: Malleable Iron Threaded Fittings

4. B16.4: Cast Iron Threaded Fittings

5. B16.5: Pipe Flanges and Flanged Fittings

6. B16.9: Factory Made Wrought Steel Butt Weld Fittings

7. B16.11: Forged Steel Fittings, Socket Weld and Threaded

8. B16.15: Cast Bronze Threaded Fittings

9. B16.18: Cast Copper Alloy Solder Joint Pressure Fittings

10. B16.20: Metallic Gaskets for Pipe Flanges

11. B16.21: Now Metallic Flat Gaskets for Pipe Flanges

12. B16.22: Wrought Copper and Copper Alloy Solder Joint Pressure Fittings

13. B16.24: Cast Copper Alloy Pipe Flanges and Flanged Fittings Class 150, 300, 400, 600, 800, 1500 and 2500

14. B182.1 Square and hex bolts and screws

15. B182.2 Square and hex nuts

16. B16.39: Malleable Iron Threaded Pipe Unions

17. B16.42: Ductile Iron Pipe Flanges and Flanged Fittings

18. B31.1: Power Piping

19. B36.10: Welded and Seamless Wrought Steel Pipe

20. Z49.1: Safety in Welding and Cutting

E. AWWA: American Waterworks Association

1. C104/A21.4: Cement Mortar Lining for Ductile Iron Pipe and Fittings for Water

2. C110/A21.10: Ductile Iron and Gray Iron Fittings for Water

3. C111/A21.11: Rubber Gasket Joints for Ductile Iron Pipe and Threaded Flanged

4. C151/A21.51: Ductile Iron Pipe, Centrifugally Cast in Metal Molds or Sand Lined Molds, for Water or Other Liquids

5. C153/A21.53: Ductile Iron Compact Fittings, 3" thru 6", for Water and Other Liquids

6. C200: Steel Water Pipe 6" and Larger

7. C205: Cement Mortar Protective Lining and Coating for Steel Water Pipe

8. C206: Field Welding of Steel Water Pipe

9. C207: Steel Pipe Flanges for Waterworks

10. C208: Dimensions For Fabricated Steel Water Pipe Fittings

11. C600: Standard for Installation of Ductile Iron Water Mains and Their Appurtenances

12. C606: Standard for Grooved and Shouldered Joints

13. C210: Liquid Epoxy Coating System for the Interior and Exterior of Steel Water Pipes

F. CISPI: Cast-Iron Soil Pipe Institute

1. 301: Hubless Cast Iron Sanitary System: With No-Hub Pipe and Fittings

G. ASTM: American Society for Testing and Materials

1. A 47: Ferritic Malleable Iron Castings

2. A 53: Pipe, Steel, Black and Hot-Dipped, Zinc-Coated Welded and Seamless

3. A 74: Cast Iron Soil Pipe and Fittings

4. A 105/A105M: Forgings, Carbon Steel, for Piping Components

5. A 106: Seamless Carbon Steel Pipe for High-Temperature Service

6. A 135: Electric-Resistance-Welded Steel Pipe

7. A 153: Zinc Coating (Hot Dip) on Iron and Steel Hardware

8. A 183: Carbon Steel Track Bolts and Nuts

9. A193: Alloy-Steel and Stainless Steel Bolting Materials for High-Temperature Service

10. A194: Carbon and Alloy Steel Nuts for Bolts for High-Pressure and High-Temperature Service

11. A197: Cupola Malleable Iron

12. A 234/A23AM: Pipe Fittings of Wrought Carbon Steel and Alloy / Rev A: Steel for Moderate and Elevated Temperature

13. A 307: Carbon Steel Bolts and Studs, 60000 PSI Tensile Strength

14. A 312: Standard for Seamless and Welded Austenitic Stainless Steel Pipe.

15. A 536: Ductile Iron Castings

16. A 568: Steel, Sheet Carbon and High-Strength Low-Alloy / Rev A: Hot-Rolled and Cold-Rolled, General Requirements

17. A 795: Black and Hot-Dipped Zinc-Coated (Galvanized) Welded and Seamless Steel Pipe for Fire Protection Use

18. B 32: Solder Metal

19. B 43: Seamless Red Brass Pipe, Standard Sizes

20. B 75: Seamless Copper Tube

21. B 88: Seamless Copper Water Tube

22. C 564: Rubber Gaskets for Cast Iron Soil Pipe and Fittings

23. D 2000: Standard Classification System for Rubber Products in Automotive Application

24. F 36: Compressibility and Recovery of Gasket Materials

25. F 37: Sealability of Gasket Material

26. F 38: Creep Relaxation of a Gasket Material

27. F 146: Fluid Resistance of Gasket Materials

28. F 104: Non-metallic Gasket Materials

29. F 152: Tension Testing of Nonmetallic Gasket Materials

30. C 33: Standard Specification for Concrete Aggregates

31. D-2122: Standard Test Method for Determining Dimensions of Thermoplastic Pipe and Fittings

32. D-2513: Standard Specification for Thermoplastic Gas Pressure / Rev. B: Pipe, Tubing and Fittings

33. D-1248: Standard Specification for Polyethylene Plastic Molding and Extrusion Materials

34. D-3350: Polyethylene Plastic Pipe and Fittings Materials

H. Copper Development Association

1.5 SUBMITTALS

A. See Section 232000 and General Conditions for additional information.

B. Product Data: Include date on pipe materials, steam/condensate specialties, pipe fittings and accessories. Provide manufacturers catalogue information and mill certificates.

C. Welders Certificate: Include welder's certification of compliance with ASME (BPV IX).

D. Manufacturer's Installation Instructions: Indicate hanging and support methods, joining procedures.

E. Project Record Documents: Record actual locations of all piping, valves, traps and valve tag numbers.

F. Grooved joint couplings and fittings shall be shown on drawings and product submittals and shall be specifically identified with the applicable designation.

G. Maintenance Data: Include installation instructions, spare parts lists, exploded assembly views.

H. Provide piping plans to a minimum scale of 1/4" - 1'-0".

1.6 QUALITY ASSURANCE

A. Installer: Company specializing in performing work of the type specified in this section, with documented experience.

B. All grooved joint

1. Couplings, fittings, valves, and specialties shall be the products of a single manufacturer.
2. Grooving tools shall be of the same manufacturer as the grooved components.

C. Welders: Certify in accordance with ASME (BPV IX).

1.7 REGULATORY REQUIREMENTS

A. Conform to ASME B31.9 code for installation of steam and condensate piping systems including specialties.

B. Welding Materials and Procedures: Conform to ASME (BPV IX) and applicable state labor regulations.

C. Provide certificate of compliance from authority having jurisdiction, indicating approval of welders.

1.8 DELIVERY, STORAGE AND HANDLING

A. Protect piping systems and specialties from entry of foreign materials by temporary covers, completing sections of the work, and isolating parts of completed system.

1.9 ENVIRONMENTAL

A. Do not install piping when environmental conditions are outside the specific limitations of the referenced codes and manufacturer's recommendations.

PART 2 – PRODUCTS

2.1 GENERAL

A. Provide all piping, fittings, flanges, couplings, unions, bolting, gaskets, welding, threading and soldering for main piping network, branches and connections to equipment as shown on the drawings and as required to provide complete systems. All piping, fittings and accessories shall conform to the appropriate Service Pipe Schedule as specified hereinafter.

1. Acceptable manufacturers contingent on compliance with the specifications.

a. Pipe

1) Steel

a) U.S. Steel
b) AK Steel

2) Ductile Iron

a) U.S. Pipe
b) Atlantic Pipe

3) Copper

a) Cambridge Lee
b) Cerro

b. Fittings

1) Welded Fittings

a) Anvil
b) Weld Bend
c) Hackney

2) Iron Fittings

a) Anvil
b) Flagg
c) Ward

3) Steel

a) Vogt
b) Velan

4) Grooved Piping

a) Victaulic Company of America

B. General

1. All pipe and fitting shall be new, first quality material suitable for continuous operation under the conditions specified. All material shall be in conformance with ANSI Standards.

2. All pipe shall be a product of the United States of America. Mill certificate shall be provided as required.

3. All piping shall be clearly marked with material specification.

4. All pipe and material shall comply with the requirements and recommended practices of ASME B31.1 Power Piping Code (latest Edition and Addenda).

5. Elbows shall be long radius ANSI B16.9 unless otherwise specified.

6. Fittings shall be used at all branch connections from headers.

7. Acceptable fittings shall be tees. "Weldolets", "Threadolets" and "Sockolets" will also be allowed as specified. Fishmouth or shaped nipples will not be allowed.

8. Provide drains at low points and vents at high points of all piping systems and between pumps and check valves.

9. Steam pipes shall be provided with drip legs and traps at all low points and as otherwise specified.

10. Steam service as specified herein shall include steam trap piping to and including shut-off valve on trap discharge and relief valve discharge.

11. Condensate service shall start at the connection to the main valve where the branch to the steam trap starts.

12. Lubricants used for the installation of grooved couplings shall be approved in writing by the coupling manufacturer.

13. All pipe and fittings with threaded ends shall have IPS threads cut clean and true and in conformance with the ANSI B1.20.1.

14. Threaded pipe and fittings shall be made up with special care to avoid marring or damaging pipe and fitting surfaces.

15. All threaded joints in steel and iron pipe shall be made up with pipe thread compound or other compound suitable for design temperature and pressure of piping. All threaded joints in copper pipe shall be made up with Teflon pipe tape, petroleum gas grade, wound on male threads, clockwise as viewed from end of pipe.

16. Provide high temperature brass, bronze steel or cast ductile iron (as appropriate) dielectric unions or flanges between dissimilar pipe materials to prevent galvanic action, as required. Gaskets shall be suitable for operation up to design temperature of the piping.

17. No joints shall be "backed-off" to align pipe and fittings.

18. Gauge lines shall be stainless steel with compression fittings.

19. Piping for compressed air for controls shall be copper.

20. Use "Never-Freeze" Copper Anti-Seize by Frederickseal or similar on all flange bolts. Torque all bolts to suitable values using torque wrenches.

21. All condensate piping and steam piping in inaccessible shafts, trenches, or tunnels shall be socket weld 2" and below.

2.2 SERVICE PIPE SCHEDULE

Service	Type	Grade	Wall		Joints (Minimum Sch. Shall match Wall)		Test Pressure
			to 10"	12" & Up	2" and Less	2½" & Up	PSIG
Chilled water supply and return	A106 or A53 Seamless or ERW	A or B	Sch.40	Standard 0.375"	Threaded	Butt Welded or Grooved Note 3	225
Secondary chilled water system	A106 or A53 Seamless or ERW	A or B	Sch.40	Standard 0.375"	Threaded	Butt Welded or Grooved Note 3	225
Condenser water supply and return	A106 or A53 Seamless or ERW	A or B	Sch.40	Standard 0.375"	Threaded	Butt Welded or Grooved Note 3	225
Hot water supply and return	A106 or A53 Seamless or ERW	A or B	Sch.40	Standard 0.375"	Threaded	Butt Welded or Grooved Note 3	225
Pumped condensate	A106 or A53 Seamless or ERW	A or B	Sch.80	Extra Strong 0.5"	Threaded	Butt Welded	225
Secondary hot water system	A106 or A53 Seamless or ERW	A or B	Sch.40	Standard 0.375"	Threaded	Butt Welded	225
Low pressure steam (0 to 15 psig)	A106 or A53 Seamless or ERW	A or B	Sch.40	Standard 0.375"	Threaded Malleable	Butt Welded	225
Medium pressure steam (16 psig to 99 psig)	A106 or A53 Seamless or ERW	A or B	Sch.40	Standard 0.375"	Threaded Malleable	Butt Welded	225
High pressure steam (100 psig to 225 psig)	A106 or A53 Seamless or ERW	A or B	Sch.80	Extra Strong 0.5"	Threaded Malleable	Butt Welded	325
High pressure condensate return	A106 or A53 Seamless or ERW	A or B	Sch.80	Extra Strong 0.5"	Threaded Malleable	Butt Welded	225
Hot well steam condensate and pump discharge to 2½" & up	A106 or A53 Seamless or ERW	B	Sch.80	Extra Strong 0.5		Butt Welded	325
Hot well steam condensate and pump discharge to 2"	A106 or A53 Seamless or ERW	B	Sch.80	Extra Strong 0.5"	Threaded Malleable		325

Service	Type	Grade	Wall		Joints (Minimum Sch. Shall match Wall)		Test Pressure
			to 10"	12" & Up	2" and Less	2½" & Up	PSIG
Low pressure condensate return	A106 or A53 Seamless or ERW	A or B	Sch.80	Extra Strong 0.5"	Threaded Note 1	Butt Welded	225
Medium pressure condensate return	A106 or A53 Seamless or ERW	A or B	Sch.80	Extra Strong 0.5"	Threaded Note 1	Butt Welded	225
Make-up and fill (up to 200F on grooved)	Hard Drawn Copper	ASTM B88	Type L		95-5 Solder	Silver Brazed or Grooved Note 3	225
Miscellaneous atmospheric vents (up to 200F on grooved)	A53	A or B	Sch.40	Standard 0.375"	Threaded Note 2	Butt Welded or Grooved Note 3	225 (with air)
Miscellaneous drains 2½" & up (up to 200F on grooved)	A53	A or B	Sch.40	Standard 0.375"		Butt Welded or Grooved Note 2, 3	225
Miscellaneous drains to 2"	Hard Drawn Copper	ASTM B88	Type L		DWV 95-5 Solder		225
Emergency generator exhaust	A106 or A53 Seamless or ERW	B	Sch.40	Standard 0.375"	Butt Welded	Butt Welded	225 (with air)
Refrigerant relief for all other units	Hard Drawn Copper	ASTM B88	Type L		Silver Brazed	Silver Brazed	---
Refrigerant relief for centrifugal chillers	A106 or A53 Seamless or ERW	A or B	Sch.40	Standard 0.375"	Threaded Malleable	Butt Welded	---
Refrigerant system	Hard Drawn Copper	ASTM B280	Type L		Silver Brazed	Silver Brazed	---
Fuel oil supply and return	See Fuel System Specification Section						See Spec
Fuel oil supply and return below grade	See Fuel System Specification Section						See Spec
Contractor option Chilled water 2” or Less	Hard Drawn Copper	ASTM B280	Type L	None	Mechanical Press Fitting		225
Contractor option Hot water 2” or Less	Hard Drawn Copper	ASTM B280	Type L	None	Mechanical Press Fitting		225

Service	Type	Grade	Wall		Joints (Minimum Sch. Shall match Wall)		Test Pressure
			to 10"	12" & Up	2" and Less	2½" & Up	PSIG
Contractor option Condenser water 2” or Less	Hard Drawn Copper	ASTM B280	Type L	None	Silver Brazed		225
Contractor option Secondary water 2” or Less	Hard Drawn Copper	ASTM B280	Type L	None	Mechanical Press Fitting		225
Other piping (up to 200F on grooved)	A106 or A53 Seamless or ERW	A or B	Sch.80	Extra Strong 0.5"	Threaded Malleable	Butt Welded or Grooved Note 3	325

Note 1: In concealed inaccessible location provide socket welded.

Note 2: Outdoor portion of piping shall be painted with a high temperature rust inhibiting primer and two coats of high temperature enamel paint (color shall be black unless otherwise selected by the architect).

Note 3: Grooved piping systems of standard wall or lighter shall be roll grooved according to Victaulic roll groove specification standards. On piping heavier than standard wall, cut grooving required per the manufactures cut groove specification standard. Gasket must be selected for intended service.

2.3 FITTINGS

A. For Steel Pipe

1. 2 1/2" and Larger, Butt Welded

a. Butt weld, same weight as piping.

b. ANSI A234 WPB

c. ANSI B16.9

d. Branch Connections:

1) Equal to main and to (2) pipe sizes smaller shall be welded tees.

2) Three (3) pipe sizes and smaller than main:

a) 2 1/2" and larger: weldolets or Tee

b) To 2": Thread-O-Lets, sock-o-let or Tee.

2. 2" and Smaller Screwed

a. Cast Iron: A126 ANSI B16.1, B16.4

1) 125 lb., wsp

2) 250 lb., wsp where noted

b. Malleable Iron: A47, A197, ANSI B16.3

1) 150 lb., wsp. Galvanized for fill and make-up water galvanized piping.

2) 150 lb. wsp.

3) 300 lb. wsp where noted

c. Carbon Steel: A105, ANSI B16.11

d. Cast iron drainage: ANSI B16.12

e. Galvanized for galvanized piping.

f. Ductile Iron: ASTM A395. Contractor has option to furnish 300 lb. ductile iron in lieu of 250 lb. cast iron or 300 lb. malleable iron.

3. Mechanical Couplings and Fittings: Contractor's option to provide mechanical couplings and fittings in lieu of welded fittings and joints for water service not exceeding 200°F.

a. Mechanical Couplings: Ductile iron, ASTM A536, Grade 65-45-12, for following working pressures with standard wall pipe:

Note: With the use of these coupling and fittings, the contractor shall include molded insulation similar to Pro-Tec-T-Kotes, Dallas, Texas.

1) Up To 6" IPS: 585 psi

2) 8" to 12" IPS: 400 psi

3) 14" to 24" IPS: 350 psi

a) Grooved type or steel shoulder ends.

(1) Bolts: Oval Neck Track Type, ASTM A449

b) Gaskets: EPDM, ASTM D2000,

(1) Similar to Victaulic Flushseal® Grade "E" EPDM

c) Lubricant:

(1) Suitable for service and submitted for approval with written approval from coupling manufacturer stating it is acceptable and does not affect guarantee.

4) Rigid Type:

a) Up to 12”: Housings cast with offsetting, angle-pattern bolt pads to provide rigidity and system support and hanging in accordance with ANSI B31.1 and B31.9.

(1) 21/2” through 8”

(a) Similar to: Victaulic Style 107.

(2) 10”” through 12””

(a) Similar to: Victaulic Style 07.

b) 14” to 24”:

(1) Wide profile housings with lead-in chamfer on key.

(2) Key shall fill the wedge shaped groove to provide rigidity and system support and hanging in accordance with ANSI B31.1 and B31.9.

(3) Similar to: Victaulic AGS Style W07.

5) Flexible Type Couplings:

a) Up to 12”: Use in locations where vibration attenuation and stress relief are required.

(1) 21/2” through 8”

(a) Similar to: Victaulic Style 177.

(2) 10”” through 12””

(a) Similar to: Victaulic Style 77.

b) 14” to 24”: Wide profile housings with lead-in chamfer on key. Key designed to fit into the AGS groove and allow for linear and angular movement, vibration attenuation, and stress relief. Victaulic AGS Style W77.

6) Flange Adapters:

a) Up to 12”: Flat face, for direct connection to ANSI

(1) Class 150

(a) Similar to: Victaulic Style 741

(2) Class 300

(a) Similar to: Victaulic Style 743

b) 14” to 24”: Flat face, AGS Adapter Nipple, for direct connection to ANSI Class 150 flanged components.

(1) Similar to: Victaulic Style W45.

(2) Similar to: Victaulic Style 741

b. Fittings:

1) Grooved type, ductile iron ASTM A536 or malleable iron as specified for couplings to 12". For 12" to 24", steel ASTM A234, rated 300 psi working pressure.

2) Up to 12”: Grooved type, ductile iron ASTM A536 as specified for couplings; steel ASTM A234; or factory fabricated from carbon steel pipe conforming to ASTM A53; rated working pressure equal to adjoining couplings.

3) 14” to 24”: AGS grooved type, ductile iron ASTM A536 as specified for couplings; steel ASTM A234; or factory fabricated from carbon steel pipe conforming to ASTM A53; rated working pressure equal to adjoining couplings, grooved ends.

c. Companion Pipe Grooving: As per coupling and fitting manufacturer's recommendations.

1) Grooves shall be applied using approved grooving tools fitted with coordinated roll sets.

d. If any other lubricant or other manufacturers gaskets are used at the site, all gaskets at all joints shall be replaced.

e. If access doors are used at each joint in shafts, door shall clearly access joints.

1) The Mechanical Contractor shall furnish doors, coordinate each location, and obtain written approval for each location from the Architect.

f. All steel elbows shall be long radius or greater.

g. The following **are not** acceptable:

1) Products similar to Victaulic Fit products.
2) Products similar to reducing coupling.
3) Press fit products.

h. Valves shall meet the valve specification and may be grooved.

B. For Copper Tubing

1. Solder Joint: Wrought Copper, ANSI B16.22 or Cast Bronze B16.18.

a. 2" and less

1) Silver brazing alloy.

b. 2½" and larger

1) Silver brazing alloy.

a) For refrigerant piping and where noted: Silver brazing alloy, similar to Handy and Harman Easy-Flo.

2. Compression and Flared Fittings: Cast brass, ANSI B16.26.

3. Grooved Joint Couplings and Fittings 2-1/2” and Larger:

a. Couplings

1) Shall consist of two ASTM A536 ductile iron housing segments cast with offsetting, angle-pattern bolt pads to provide system rigidity, coated with copper-colored alkyd enamel.

b. Gaskets:

1) Shall be pressure-responsive, synthetic rubber EPDM, Rated for 250°F,

2) Similar To Victaulic FlushSeal® Grade-E EPDM

3) Secured together with plated steel bolts and nuts, ASTM A183 or A449. Couplings shall be manufactured to connect copper tubing sized tube and fittings. Victaulic Style 607.

c. Grooved end fittings

1) Shall be wrought copper conforming to ASTM B75 or B152 per ANSI B16.22, or bronze castings conforming to ASTM B584 per ANSI B16.18. Fittings shall be manufactured to copper tubing sizes

with grooves designed to accept Victaulic Style 607 couplings. Flaring of tube and fitting ends to IPS dimensions is not permitted.

4. Mechanical press fittings are acceptable for systems up to 150 psi WWP and sizes up to 4”. Fittings shall be UL/CSA, NSF61G, wrought copper conforming to ASTM B 75 with EPDM seals, rated for -20°F to +250°F temperature and continuous pressure duty to 200 psi per ICC LC1002. Fittings shall be installed with manufacturer approved tools. Nibco Press System, Viega ProPress.

C. For Red Brass Pipe: Standard cast bronze, banded, threaded, ANSI B16.15.

2.4 FLANGES

A. For Steel Pipe

1. Welded: Weld neck, ANSI B16.5.

a. 150 lb. Wsp
b. 300 lb. Wsp
c. 400 lb. Wsp

2. Screwed

a. Standard Cast Iron: ANSI B16.1
b. Extra Heavy Cast Iron: ANSI B16.1

3. Match connecting flange class and facing.

4. Grooved Joint Flange Adapters

a. Ductile iron, flat face, for direct connection to ANSI 150 flanges. Victaulic Style 741 or W741.

b. Ductile iron, flat face for direct connection to ANSI Class 300 flanges. Victaulic Style 743.

B. For Copper Tube

1. Grooved Joint Flange Adapters

a. Ductile iron coated with copper-colored alkyd enamel, flat face, for direct connection to ANSI Class 150 flanges. Victaulic Style 641.

2.5 FLANGE GASKETS

A. One-piece ring type 1/16" thick, except as noted.

B. Suitable for temperature, pressure and service of system.

C. Compressed compound fiber type for the following:

1. Low pressure steam and condensate return and pumped discharge.
2. Hot water.
3. Cold water.

D. Spiral wound Type 304 stainless steel with flexible graphite fill for:

1. Media and High Pressure Steam systems.
2. Condensate systems.

E. For Joints of Dissimilar Metals

1. Isolating gaskets, sleeves, and washers between flanges, bolts and nuts.
2. Gaskets, similar to DuPont Teflon.

2.6 UNIONS

A. For Steel Pipe

1. Malleable iron 300 lb. wsp

a. Ground Jacket Seat: Brass-to-iron, black or galvanized to match piping.

2. Forged steel, 2000, 3000 lb. WOG class, bronze-to-steel or steel-to-steel seats, where noted or required for service.

3. Unions are not required on installations using grooved connections. The couplings shall serve as unions.

B. For Red Brass Pipe

1. All bronze, 150 lb. wsp, ground joint seat.

PART 3 – INSTALLATION

3.1 PIPING INSTALLATION

A. General

1. Provide all piping systems as shown on the drawings and otherwise required to make a complete, workable and neat job, installing all valves, appurtenances, grooved joint couplings, unions and gaskets.

2. The Contractor shall use care arranging all piping as shown on the drawings and shall carefully examine the arrangements where offsets are indicated and shall follow details as shown.

3. All piping shall be run to true alignment generally parallel or perpendicular to adjacent building walls, floors and ceilings and with uniform grades and spacing so as to present a neat and workmanlike appearance.

4. Care shall be paid to the exact locations for all piping and equipment with respect to equipment, ducts, conduits, slabs, beams and lighting fixtures, so as to provide maximum access to all mechanical and electrical equipment in the buildings.

5. Close coordination and cooperation shall be exercised with other Trades in locating the piping and equipment in the best interests of the Owner.

6. The drawings and specifications covering other work to be done in the buildings shall be carefully studied and arrangements made to avoid conflict.

7. The drawings shall be followed where they are definite and provided such procedure causes no objectionable conditions or does not conflict with other Trades, Laws, Regulations or recommendations of equipment manufacturers.

8. The drawings are intended to indicate the sizes of piping connections and if certain sizes are omitted, or unclear, obtain additional information before proceeding.

9. The minimum pipe size shall be 3/4" with the exception of a few areas that are specifically documented to be smaller.

10. Rough in for all equipment requiring connections to the Mechanical work. Obtain all necessary data on exact locations, sizes, connections, fittings and arrangements and exact routings as may be required for proper installation.

11. Bushings shall not be used for reducers. Reducing fittings shall be used for all changes in pipe size and shall be as follows:

    a. Horizontal water piping: Eccentric flat on top for venting.

    b. Horizontal steam and condensate piping: Eccentric flat on bottom for drainage.

    c. Vertical water or steam: Concentric.

12. Unions, grooved joint couplings or flanges shall be provided in conjunction with all equipment, coils, control valves and specialties in all pipe lines and at all points necessary to provide reasonable access to the piping systems.

13. Ends of all pipes shall be reamed clean and all pipes shall be straightened before erection and measures shall be taken to preserve this cleanliness after erection.

14. Support piping independently at all equipment so that the equipment is not stressed by piping weight or expansion.

15. Arrange piping for maximum accessibility for maintenance and repair, locate valves for easy access and operation.

16. Provide dielectric unions, waterway fittings or flanges between dissimilar pipe materials to prevent galvanic action as required.

17. Provide proper provision for expansion and contraction in all portions of pipe work, to prevent undue strains on piping or apparatus connected.

18. Provide double swings at riser transfers and other offsets to take up expansion. Arrange riser branches to take up motion of riser.

19. Branch runouts to equipment shall have a minimum of (3) elbows, adequately spaced.

20. Copper tubing and galvanized steel shall not be mixed in any one run of piping, except as otherwise specified herein.

21. During construction, temporarily close open ends of pipes with sheet metal caps or duct tape to prevent debris from entering piping systems.

22. Provide extra heavy pipe for nipples where unthreaded portion of pipe is less than 1 1/2" long.

23. Use of close nipples is not permitted.

B. Joints in piping systems

1. For all services, shall be made tight and leakproof against test pressures.

2. Leaks in screwed or flanged joints which cannot be eliminated by normal wrench tightening methods shall be repaired at the joint.

3. Under no circumstances shall caulking be allowed.

4. No joints shall be backed off to align pipe fittings.

C. All piping connections to equipment shall be:

1. Made with offsets.

2. Provided with unions, grooved joint couplings and/or flanges so arranged that the equipment can be serviced or removed without dismantling the piping.

3. If equipment, becomes air bound or stratified:

a. All necessary modifications to the piping system required to rectify the condition permanently shall be made to piping and equipment, furring, floors, walls, etc., at the Contractor's expense.

D. Pipe pitch, unless otherwise indicated on the drawings, shall be as follows:

1. Steam and condensate: 1" in 40'-0", down in direction of flow.

2. Steam riser branches and undripped connections: 1" in 10'-0", up in direction of steam flow.

3. Water Piping:

   a. Up to 1" pipe: 1" in 40'-0", up in direction of flow.
   b. 1 1/4" larger: 1" in 100'-0", up in direction of flow.

4. Condensation Drainage:

   a. Preferred: 1/4 in./ft., down in direction of flow.
   b. Minimum: 1/8 in./ft., down in direction of flow.

E. Drain connections at low points in water piping and where noted:

1. In equipment rooms:

   a. To 3" pipe: 3/4" ball valve.
   b. 4" to 8": 1 1/2" ball valve.
   c. 10" and larger: 2 1/2" ball valve.

2. Other areas:

   a. 1/2" ball valve with pressure rated capped hose connection unless clearly documented to be larger such as strainer assemblies.

F. Manual air vents at high points and where required to expel air:

1. To 3" pipe: line size air chamber, 12" long, 1/2" ball valve.

2. 4" to 8": line size air chamber, 6" long, 1/2" ball valve.

3. 10" and larger: line size pipe cap, 1/2" ball valve.

G. Steam

1. At low points of steam lines provide traps adequately sized to collect condensate.

2. All supply mains shall be dripped and trapped on any vertical lift.

3. Provide capped full sized dirt pockets at all traps, riser heels, and wherever dirt and scale may accumulate.

4. To meet job conditions, mains shall be set up (with drip connections to return line) to maintain headroom and clear other pipes as hereinbefore specified.

System is to be arranged to secure venting of air to the return line at all low points in steam mains, without permitting ingress of air.

5. All apparatus subject to high temperature differentials and high steam demand loads such as steam-water heat exchangers shall have vacuum breakers installed.

6. Where condensate piping, to meet job conditions, may have to set down under stoops, doors, etc., and again rise after passing these, the sets shall be made with 45° fittings and with Y-laterals at each end, with brass plugs to permit easy cleaning of trapped portions of pipe.

7. At any points where return mains have to rise again, after being depressed, provide overhead "air lines" (not smaller than 1" in size) and connect the (2) high sides.

8. Any turns in water sealed lines shall be made with crosses, with brass plugs in unused outlets to facilitate cleaning.

H. Grooved joints

1. Shall be installed in accordance with the manufacturer's latest installation instructions.

   a. When a torque is stamped on the joint or listed in the installation instructions for that type of joint. The joint shall be tightened to that minimum torque with a torque wrench.

   b. A torque wrench shall be available to test any such joint at the Engineer's request.

2. All fittings and joints shall be of the same Manufacture.

3. Grooved ends shall be clean and free from indentations, projections, and roll marks in the area from pipe end to groove.

4. Gaskets shall be verified as suitable for the intended service prior to installation.

5. Gaskets shall be molded and produced by the coupling manufacturer.

6. Gaskets lubricant shall be produced by the coupling manufacturer.

7. The grooved coupling manufacturer's factory trained representative shall provide on-site training for contractor's field personnel in the use of grooving tools, application of groove, and installation of grooved joint products.

8. The manufacturer's representative shall periodically visit the jobsite and review installation.

9. Contractor shall remove and replace any joints deemed improperly installed.

I. Refrigerant Piping and Connections

1. Provide all refrigeration piping, including thermal expansion valves, driers, moisture indicator sight glasses, shutoff valves, controls, gauges, insulation and other appurtenances, as required to complete the refrigeration system.

2. Piping connections to the units shall be fitted with flexible pipe fittings and renewable unions.

3. The HVAC Contractor shall triple evacuate and field charge entire refrigeration system.

4. All labor and materials required for evacuation, charging, as well as commissioning of the refrigerant systems, shall be provided by the HVAC Contractor.

5. The refrigerant piping arrangement shall be in strict accordance with manufacturer's recommendations.

6. Provide shop drawings indicating sizes and all required components and accessories for Architect's review prior to ordering equipment or installation.

7. All refrigerant piping exposed to weather outside the building shall be properly supported in a manner to allow expansion and contraction.

8. All sleepers provided shall be secured and their installation shall be as directed and approved by the Architect.

9. Refrigerant piping joints:

   a. Shall be made with cadmium free 45% silver brazing filler metal having a melting point of 1225°F.

   b. Joint flux, if used, shall be compatible with materials.

   c. The outside surface at end of pipe and inside surface of fittings shall be thoroughly cleaned with steel wool or emery cloth, and cut pipe ends shall be reamed and all burrs shall be removed.

   d. Care shall be taken to ensure the entry of foreign particles into the system does not occur.

   e. While brazing, purge piping with low pressure nitrogen to prevent interior oxidation and to dry the system.

   f. Caution must be taken to continuously ventilate the work area and to avoid allowing nitrogen to concentrate in an enclosed area thereby expelling all of the oxygen and causing asphyxiation.

10. Traps shall be factory fabricated one-piece fittings or field assembled 45°-90°-45° elbows. Do not use 90°-90°-90° elbows.

3.2 WELDING

A. All welding done under this Contract:

1. Shall be performed by experienced welders in a neat and workmanlike manner.

2. All welding done shall be in accordance with ASME B31.1 Power Piping Code (latest Edition and Addenda).

3. The Contractor shall furnish to the Owner for approval and record the following:

a. Welding Procedure Specifications (WPS) for each procedure to be used

b. Procedure Qualification Record (PQR)

c. Welding Operator Qualification Tests (WPQ) for each welder to be employed.

4. Welders

a. Documents shall be on forms similar to the forms referenced in the ASME Boiler & Pressure Vessel Code, Section IX, latest edition.

b. These records shall be furnished to the Owner for this project not less than (2) weeks, prior to any welding.

c. All welders to be employed by the Contractor on this work shall be certified in accordance with the above.

d. The Mechanical Contractor shall test welders to these procedures within (3) months of the work beginning to certify them for this work.

e. The above forms shall be clearly marked specifically for the Contractor's use and certified by the appropriate personnel.

f. Documents prepared for other's use are not allowed.

g. Failure to provide these forms to the satisfaction of the Owner, or his representative, will result in the replacement of the Mechanical Contractor with one who can meet these requirements, at no additional cost to the Owner.

h. No delays or cost increases to the overall project schedule will be accepted due to non-compliance with the above by the Mechanical Contractor.

B. Mitered elbows are not permitted. Odd angle elbows shall be cut from long radius elbows.

C. The weld reinforcement shall be not less than 1/16" nor more than 1/8" above the normal surface of the joined sections.

D. The reinforcement shall be crowned at the center and shall taper on each side to the surface being joined.

E. The exposed surface of the weld shall present a workmanlike appearance and shall be free of depressions below the surface of the joined members.

F. No welding of any kind shall be done when the temperature of the base metal is lower than 50°F.

G. Material to be welded during freezing temperatures shall be made warm and dry before welding is started.

H. Temperature of metal shall be "warm to the hand", or approximately 60°F.

I. Inspection:

1. Welds will be inspected visually by supervisory representatives of the Architect and the Contractor.

2. Any weld judged defective by the Architect from a visual inspection shall be cut out and tested in the presence of the Owner or his representative. In the event any welder consistently produces a high percentage of unsatisfactory production welds, he shall be discharged at the request of the Owner, even though he is able to produce satisfactory welds when especially tested.

3. Removal and replacement of test coupons and samplings shall be done at the expense of the Contractor.

4. The Owner reserves the right to ultrasonically or radio-graphically test any welds for full penetration.

J. Paint all external surfaces of welds with a high temperature paint prior to insulation being applied.

K. Store all 7018 electrodes in rod oven once original container is opened.

L. Welds in all high pressure steam and high temperature hot water (350°F or greater)

1. Shall be X-ray tested.

2. This X-ray shall be performed by an independent testing company.

3. Testing company shall employ certified weld inspectors.

4. The welds shall meet the X-ray requirements in ANSI B31.1.

5. The independent inspection services shall be provided by the Mechanical Contractor.

3.3 CLEANING AND BLOWING OUT

A. The equipment and piping installed under this Section shall be blown out under pressure and cleaned of foreign matter

1. Provide temporary connections where necessary

2. All cleaning shall be complete before the system is placed in service.

3. Super heated high pressure steam piping shall be blown out following ASME procedures.

4. Precautions shall be used to prevent foreign matter from getting into equipment and piping during construction.

5. The supplier of water treatment equipment and chemicals shall recommend and furnish chemicals for the purpose of cleaning and blowing out of all systems.

6. All chemicals, materials, instruments and labor shall be provided by the Contractor.

B. The surfaces of all equipment and piping shall be clean upon completion of the work.

C. All pipe line strainers shall be cleaned immediately before being turned over to the Owner for acceptance.

D. During cleaning process, hammer welds to remove scale, weld slag and other debris.

3.4 TESTING

A. Furnish all labor, material, instruments, supplies and services and bear all costs for the accomplishment of the tests herein specified.

B. Correct all defects appearing under test and repeat the tests until no defects are disclosed; leave the equipment clean and ready for use.

C. Perform all tests other than herein specified which may be required by Legal Authorities or by Agencies to whose requirements this work is to conform.

D. Furnish all necessary testing apparatus, make all temporary connections and perform all testing operations required, at no additional cost to the Owner.

E. All equipment and piping installed under this Contract shall be tested and found tight. Insulated or otherwise concealed piping shall be tested before being closed in. All leaking joints shall be corrected, retested and found tight.

F. Tests shall conform to the requirements of Local Codes but shall not be less than the equivalent of the tests called for herein.

G. Threaded joints that leak shall not be seal-welded to correct leakage.

H. Tests performed shall not relieve the Contractor of his responsibility for leaks which may develop after the tests are made.

I. All piping systems shall be subjected to a hydrostatic test at the scheduled test pressure for a period of (4) hours without drop in pressure.

J. All oil piping shall be subject to a test with oil at 225 PSIG for a period of (4) hours without drop in pressure.

K. Tests of piping systems shall be conducted before connections to equipment are made and before piping is covered, buried or otherwise concealed.

L. Systems found to have leaks shall be subjected to further tests when faulty joints have been repaired or replaced.

M. Welded joints shall be subjected to a hammer test while under pressure.

END OF SECTION

SECTION 23 2113.13 – HVAC UNDERGROUND PIPING

PART 1 – GENERAL

1.1 RELATED DOCUMENTS

A. Drawings and general provisions of the Contract, including General and Supplementary Conditions, Section 230500 and other Division 1 Specification Sections, apply to this Section.

B. LEED Building General Requirements: The Owner requires the Contractor to implement practices and procedures to meet the project's environmental performance goals, which include achieving LEED Certification. Specific project goals that may impact this area of work include: Use of recycled-content materials; use of locally-manufactured materials; use of low-emitting materials; construction waste recycling; and the implementation of a construction indoor air quality management plan. The Contractor shall ensure that the requirements related to these goals, as defined in the sections below, are implemented to the fullest extent. Substitutions, or other changes to the work proposed by the Contractor or their Subcontractors, shall not be allowed if such changes compromise the stated LEED Building Performance Criteria.

1. Comply with LEED (Leadership in Energy and Environmental Design) Green Building Rating System BD+C, Version 3.

1.2 WORK INCLUDED

A. Furnish and install all Underground, fittings, and piping and accessories to make complete and operations systems.

B. All systems shall be installed in accordance with local codes including vent piping and relief discharge termination points.

C. Provide stress calculations and forces at all anchors, guides and supports

D. Secure all permits and local/state approvals for the installation of all components included under this Section.

1.3 RELATED SECTIONS

A. Examine all drawings and criteria sheets and all other Sections of the Specifications for requirements which affect work under this Section whether or not such work is specifically mentioned in this Section.

B. Section 017419 "Construction Waste Management and Disposal" for requirements related to construction waste management and disposal at the project site.

C. Section 018113 "VOC Limits for Adhesives, Sealants, Paints and Coatings" for restrictions of VOC in adhesives, sealants, paints and coatings.

D. Section 018119 “Construction Indoor Air Quality (IAQ) Management” for requirements during construction for indoor-air-quality management.

1.4 REFERENCES

A. Applicable provisions of the following Codes and Trade Standard Publications shall apply to the work of this Section, and are hereby incorporated into, and made a part of the Contract Documents.

B. ASME: American Society of Mechanical Engineers

C. NFPA: National Fire Protection Association

1. NFPA 54: National Fuel Gas Code

D. ANSI: American National Standards Institute

1. A13.1: Scheme for Identification of Piping Systems

2. B16.3: Malleable Iron Threaded Fittings

3. B16.5: Pipe Flanges and Flanged Fittings

4. B16.9: Factory Made Wrought Steel Butt Weld Fittings

5. B16.11: Forged Steel Fittings, Socket Weld and Threaded

6. B16.39: Malleable Iron Threaded Pipe Unions

7. B31.1: Power Piping

8. B36.10: Welded and Seamless Wrought Steel Pipe

9. Z49.1: Safety in Welding and Cutting

E. ASTM: American Society for Testing and Materials

1. A 53: Pipe, Steel, Black and Hot-Dipped, Zinc-Coated Welded and Seamless

2. A 74: Cast Iron Soil Pipe and Fittings

3. A 105/A105M: Forgings, Carbon Steel, for Piping Components

4. A 106: Seamless Carbon Steel Pipe for High-Temperature Service

5. A 135: Electric-Resistance-Welded Steel Pipe

6. A193: Alloy-Steel and Stainless Steel Bolting Materials for High-Temperature Service

7. A 234/A23AM: Pipe Fittings of Wrought Carbon Steel and Alloy / Rev A: Steel for Moderate and Elevated Temperature

8. A 307: Carbon Steel Bolts and Studs, 60000 PSI Tensile Strength

9. A 568: Steel, Sheet Carbon and High-Strength Low-Alloy / Rev A: Hot-Rolled and Cold-Rolled, General Requirements

10. D-3350: Polyethylene Plastic Pipe and Fittings Materials

1.5 SUBMITTALS

A. See Section 230500 and General Conditions for additional information.

B. Product Data: Include date on pipe materials, pipe fittings and accessories. Provide manufacturers catalogue information and mill certificates.

C. Welders Certificate: Include welder's certification of compliance with ASME (BPV IX).

D. Manufacturer's Installation Instructions: Indicate hanging and support methods, joining procedures.

E. Project Record Documents: Record actual locations of all piping, valves, traps and valve tag numbers.

F. Maintenance Data: Include installation instructions, spare parts lists, exploded assembly views.

G. Provide piping plans to a minimum scale of ¼" - 1'-0".

1.6 QUALITY ASSURANCE

A. Installer: Company specializing in performing work of the type specified in this section, with documented experience.

B. Welders: Certify in accordance with ASME (BPV IX).

1.7 REGULATORY REQUIREMENTS

A. Conform to ASME B31.9 code for installation of steam and condensate piping systems including specialties.

B. Welding Materials and Procedures: Conform to ASME (BPV IX) and applicable state labor regulations.

C. Provide certificate of compliance from authority having jurisdiction, indicating approval of welders.

1.8 DELIVERY, STORAGE AND HANDLING

A. Protect piping systems and specialties from entry of foreign materials by temporary covers, completing sections of the work, and isolating parts of completed system.

1.9 ENVIRONMENTAL

A. Do not install piping when environmental conditions are outside the specific limitations of the referenced codes and manufacturer's recommendations.

PART 2 – PRODUCTS

2.1 UNDERGROUND SYSTEM FOR HOT SERVICES

A. General

1. Permanent piping acceptable manufacturers contingent on compliance with the specifications:

a. Perma Pipe
b. Insul Tek
c. Thermacore Process, Inc.
d. Roanco Piping Systems

2. Temporary piping manufacturers and methods shall be submitted for approval separately. All temporary piping locations shall be highlighted and submitted for approval.

3. All underground heating distribution conduits as shown on the contract drawings shall be fiberglass or High Density Polyethylene (HDPE) jacketed steel.

a. All straight sections, fittings, anchors and other accessories shall be factory prefabricated to job dimensions, and designed to minimize the number of field welds.

b. Each system layout shall be computer analyzed by the piping system manufacturer to determine stresses and movements of the service pipe.

1) The system design shall be in strict conformance with ANSI B31.1 latest edition, and stamped by a registered professional engineer.

c. Factory trained field technical assistance shall be provided for the critical periods of the installation; i.e., unloading, field joint instruction and testing.

d. Conduit shall be similar to MULTI-THERM 500 as manufactured by PERMA-PIPE.

B. Service Pipe

1. Internal piping shall be:

   a. Steam shall be standard weight carbon steel A-53 or A-106 seamless or ERW Grade B.

   b. Condensate piping which shall be Extra Extra strong (XX) carbon steel A-53 or A-106 Grade A or B.

2. All joints shall be butt welded for sizes 2.5 inches and larger, and socket welded for 2 inches and below.

3. Where possible, straight sections shall be supplied in 40 foot random length with 6 inches of piping exposed at each end for field joint fabrication.

C. Subassemblies

1. End seals, gland seals and anchors shall be designed and factory prefabricated to prevent the ingress of moisture into the system.

2. All subassemblies shall be designed to allow for complete draining and drying of the conduit system.

D. Service Pipe Insulation

1. Service pipe insulation shall be mineral wool. Split insulation shall be held in place by stainless steel bands installed not more than 18" apart. The insulation shall have passed the boiling test requirements specified in the Federal Agency Guidelines. The insulation shall be applied to a thickness of 3 ½ inches.

E. Outer Conduit

1. The steel conduit casing shall be smooth wall, welded steel conduit of the thicknesses specified below:

	Conduit Size	Conduit Thickness
a.	6" - 26"	10 Gauge

2. Changes in casing size, as required at oversized casing to allow for carrier pipe expansion, shall be accomplished by eccentric and/or concentric fittings and shall provide for continuous drainage.

F. Pipe Supports

1. All pipes within the outer casing shall be supported at not more than 10 foot intervals.

2. These supports shall be designed to allow for continuous airflow and drainage of the conduit in place.

3. The straight supports shall be designed to occupy not more than 10% of the annular air space.

4. Supports shall be of the type where insulation thermally isolates the carrier pipe from the outer conduit.

5. The surface of the insulation shall be protected at the support by a sleeve not less than 12 inches long, fitted with traverse and, where required, rotational arresters.

G. Outer Conduit Insulation And Jacket

1. Conduit insulation

a. Shall be spray applied polyurethane foam, having a nominal 2 pound per cubic foot density for all straight lengths and fittings.

b. The insulation thickness shall be 1 inch. Quality assurance procedures for the insulation shall include either a visual check prior to jacketing or infrared, or x-ray of the entire length, to insure there are no insulation voids.

c. The urethane foam shall meet ASTM C591 and have the minimum characteristics of .14 K-factor, density of 2 pcf and a closed cell content of 90 to 95%.

2. The outer jacket shall be filament wound fiberglass or HDPE, directly on to the urethane foam insulation or High Density Polyethylene of a minimum thickness of 125-mils.

a. All straights and fittings shall be factory jacketed.

2.2 CATHODIC PROTECTION OF UNDERGROUND PIPING SYSTEMS

A. Sacrificial Anode Type

1. General

a. Cathodic protection against galvanic corrosion shall be provided for the underground piping.

b. The cathodic protection system shall be designed and furnished by the underground piping system manufacturer.

c. Cathodic protection materials, including anodes, wire and test stations, shall be supplied by the cathodic protection system supplier.

d. Testing of the system as outlined in the NACE Recommended Practice RP-01-69 (Latest Revision) shall be made under the direction of a NACE Accredited Corrosion Specialist.

e. The cathodic protection system shall be tested within six months of completion of backfilling.

f. Cathodic protection system shall be designed for a minimum anode life of twenty years. System shall be designed based upon an earth resistivity test performed by the manufacturer.

g. A soil survey shall be conducted along the route of the proposed piping system to determine the corrosivity of the soil.

h. The firm conducting the survey shall be regularly engaged in corrosion-related work and shall be under the direction of a Corrosion Specialist accredited by the National Association of Corrosion Engineers.

2. Materials

a. ANODES: 17# Magnesium anodes shall be used having the following chemical compositions:

1)	Aluminum	5.3 – 6.7%
2)	Manganese	0.15% Minimum
3)	Zinc	2.5 – 3.5%
4)	Silicon	0.3% Maximum
5)	Copper	0.05% Maximum
6)	Nickel	0.003% Maximum
7)	Iron	0.003% Maximum
8)	Other	0.3% Maximum
9)	Magnesium	Remainder

b. All anodes shall be cast with a perforated galvanized steel strap core. The anode lead wire shall be #12-type THWN solid copper wire. The anode lead wire shall be connected to the strap core with silver solder. The anode shall be packaged in a permeable cloth bag containing a backfill of the following composition:

1)	Hydrated Gypsum	75%
2)	Powdered Bentonite	20%
3)	Sodium Sulfate	5%

c. Provide granular backfill with 100 percent passing though a 100 mesh screen. Provide prepackaged anode in a bag containing the anode and backfill. Center the anode in the firmly packaged backfill. Anodes should be buried in natural earth.

3. Cable:

a. Cable shall be UL 83, Type THWN, THHN or HMWPE, solid or stranded conductor, color-coded and sized.

4. Electrical Isolation:

   a. Piping must be electrically isolated from internal building piping at the point of connection inside the building and manhole entries.

   b. Dielectric flanges must be installed on each pipe and the pipe must be isolated from the building wall with wall sleeves and link-type seals.

   c. Contractor shall install the underground piping to prevent shorting of the system to building steel, reinforcing steel in buildings, manhole walls, foundations and other buried metallic structures.

   d. Electrical isolation flanges or dielectric unions shall be installed on all piping at all building entries and wherever else required to electrically isolate the piping system.

   e. Electrical isolation materials must be suitable for the temperatures and pressures of the piping system.

5. Test Stations:

   a. Test Stations shall be located at maximum 300 foot intervals for the purpose of testing the performance of the cathodic protection system.

   b. Test leads shall be housed in electrical conduit and terminate in waterproof junction boxes.

6. Testing

   a. After complete backfill of the site by the installing Contractor, the cathodic protection system shall be tested to provide conformance to NACE criteria. Criteria for determining the adequacy of protection shall be per NACE Standards.

PART 3 – INSTALLATION

3.1 PIPING INSTALLATION

A. General

1. Provide all piping systems as shown on the drawings and otherwise required to make a complete, workable and neat job, installing all valves, appurtenances, unions and gaskets. The Contractor shall use care arranging all piping as shown on the drawings and shall carefully examine the arrangements where offsets are indicated and shall follow details as shown.

2. All piping shall be run to true alignment parallel to building walls, and with uniform grades and spacing so as to present a neat and workmanlike appearance.

3. The drawings shall be followed where they are definite and provided such procedure causes no objectionable conditions or does not conflict with other Trades, Laws, Regulations or recommendations of equipment manufacturers.

4. The drawings are intended to indicate the sizes of piping connections and if certain sizes are omitted, or unclear, obtain additional information before proceeding.

5. Bushings shall not be used for reducers. Reducing fittings shall be used for all changes in pipe size and shall be as follows:

   a. Horizontal water piping: Eccentric flat on top for venting.

   b. Horizontal steam and condensate piping: Eccentric flat on bottom for drainage.

   c. Vertical water or steam: Concentric.

6. Ends of all pipes shall be reamed clean and all pipes shall be straightened before erection and measures shall be taken to preserve this cleanliness after erection.

7. Arrange piping for maximum accessibility for maintenance and repair, locate valves for easy access and operation.

8. Provide proper provision for expansion and contraction in all portions of pipe work, to prevent undue strains on piping or apparatus connected.

9. Pipe pitch, unless otherwise indicated on the drawings, shall be as follows:

   a. Steam and condensate: 1" in 40'-0", down in direction of flow.

   b. Steam riser branches and undripped connections: 1" in 10'-0", up in direction of steam flow.

   c. Condensation Drainage:

      1) 1/4 in./ft., down in direction of flow.

10. Drain connections at low points in water piping and where noted:

11. Manual air vents at high points and where required to expel air:

    a. To 3" pipe: line size air chamber, 12" long, 1/2" ball valve.
    b. 4" to 8": line size air chamber, 6" long, 1/2" ball valve.
    c. 10" and larger: line size pipe cap, 1/2" ball valve.

12. During construction, temporarily close open ends of pipes with sheet metal caps or duct tape to prevent debris from entering piping systems.

B. Underground system for hot services.

1. The installing contractor shall handle the system in accordance with the directions furnished by the manufacturer and as approved by the architect and engineer.

2. The casing shall be air tested at 15 PSIG.

3. The service piping shall be hydrostatically tested to 150 PSIG or 1 ½ times the operating pressure, or as specified in the contract documents.

4. The test pressure shall be held for not less than one hour.

5. Backfill

a. A 4 inch layer of sand shall be placed and tamped in the trench to provide uniform bedding for the system.

b. The entire trench shall be evenly backfilled with a similar material as the bedding in 6 inch compacted layers to a minimum height of 6 inches above the top of the insulated piping system.

c. The remaining trench shall be evenly and continuously backfilled in uniform layers with suitable excavated soil to the manufacturers Specification

C. Cathodic Protection of Underground Piping Systems

1. The installing Contractor shall handle the materials in accordance with the directions furnished by the cathodic protection supplier, and as approved by the Engineer.

3.2 WELDING

A. All welding done under this Contract shall be performed by experienced welders in a neat and workmanlike manner. All welding done shall be in accordance with ASME B31.1 Power Piping Code (latest Edition and Addenda). The Contractor shall furnish to the Owner for approval and record the following:

1. Welding Procedure Specifications (WPS) for each procedure to be used
2. Procedure Qualification Record (PQR)
3. Welding Operator Qualification Tests (WPQ) for each welder to be employed.

B. Documents shall be on forms similar to the forms referenced in the ASME Boiler & Pressure Vessel Code, Section IX, latest edition. These records shall be furnished to the Owner for this project not less than (2) weeks, prior to any welding. All welders to be employed by the Contractor on this work shall be certified in accordance with the above. The Mechanical Contractor shall test welders to these procedures within (3) months of the work beginning to certify them for this work. The above forms shall be

clearly marked specifically for the Contractor's use and certified by the appropriate personnel. Documents prepared for other's use are not allowed. Failure to provide these forms to the satisfaction of the Owner, or his representative, will result in the replacement of the Mechanical Contractor with one who can meet these requirements, at no additional cost to the Owner. No delays or cost increases to the overall project schedule will be accepted due to non-compliance with the above by the Mechanical Contractor.

C. Mitered elbows are not permitted. Odd angle elbows shall be cut from long radius elbows.

D. The weld reinforcement shall be not less than 1/16" nor more than 1/8" above the normal surface of the joined sections. The reinforcement shall be crowned at the center and shall taper on each side to the surface being joined. The exposed surface of the weld shall present a workmanlike appearance and shall be free of depressions below the surface of the joined members.

E. No welding of any kind shall be done when the temperature of the base metal is lower than 50°F. Material to be welded during freezing temperatures shall be made warm and dry before welding is started. Temperature of metal shall be "warm to the hand", or approximately 60°F.

F. Welds will be inspected visually by supervisory representatives of the Architect and the Contractor. Any weld judged defective by the Architect from a visual inspection shall be cut out and tested in the presence of the Owner or his representative. In the event any welder consistently produces a high percentage of unsatisfactory production welds, he shall be discharged at the request of the Owner, even though he is able to produce satisfactory welds when especially tested. Removal and replacement of test coupons and samplings shall be done at the expense of the Contractor. The Owner reserves the right to ultrasonically or radiographically test any welds for full penetration.

G. Paint all external surfaces of welds with a high temperature paint prior to insulation being applied.

H. Store all 7018 electrodes in rod oven once original container is opened.

3.3 X-RAY TESTING

A. Welds on all underground steam and underground high temperature hot water (350°F or greater) shall be X-ray tested.

B. This X-ray shall be performed by an independent testing company. Testing company shall employ certified weld inspectors.

C. The welds shall meet the X-ray requirements in ANSI B31.1.

D. The independent inspection services shall be provided by the Mechanical Contractor.

3.4 CLEANING AND BLOWING OUT

A. The equipment and piping installed under this Section shall be blown out under pressure and cleaned of foreign matter, through temporary connections where necessary, before the system is placed in service. Super heated high pressure steam piping shall be blown out following ASME procedures. Precautions shall be used to prevent foreign matter from getting into equipment and piping during construction. The supplier of water treatment equipment and chemicals shall recommend and furnish chemicals for the purpose of cleaning and blowing out of all systems. All chemicals, materials, instruments and labor shall be provided by the Contractor.

B. The surfaces of all equipment and piping shall be clean upon completion of the work.

C. All pipe line strainers shall be cleaned immediately before being turned over to the Owner for acceptance.

D. During cleaning process, hammer welds to remove scale, weld slag and other debris.

3.5 TESTING

A. Furnish all labor, material, instruments, supplies and services and bear all costs for the accomplishment of the tests herein specified. Correct all defects appearing under test and repeat the tests until no defects are disclosed; leave the equipment clean and ready for use.

B. Perform all tests other than herein specified which may be required by Legal Authorities or by Agencies to whose requirements this work is to conform.

C. Furnish all necessary testing apparatus, make all temporary connections and perform all testing operations required, at no additional cost to the Owner.

D. All equipment and piping installed under this Contract shall be tested and found tight. Insulated or otherwise concealed piping shall be tested before being closed in. All leaking joints shall be corrected, retested and found tight. Such tests shall conform to the requirements of Local Codes but shall not be less than the equivalent of the tests called for herein. Threaded joints that leak shall not be seal-welded to correct leakage.

E. Tests performed shall not relieve the Contractor of his responsibility for leaks which may develop after the tests are made.

F. All piping systems shall be subjected to a hydrostatic test at 150 PSIG or 1 ½ times operating pressure whichever is greater, for a period of (4) hours without drop in pressure.

G. Tests of piping systems shall be conducted before connections to equipment are made and before piping is covered, buried or otherwise concealed.

H. Systems found to have leaks shall be subjected to further tests when faulty joints have been repaired or replaced.

I. Welded joints shall be subjected to a hammer test while under pressure.

END OF SECTION

SECTION 23 2123 – HVAC HYDRONIC PUMPS AND ACCESSORIES

PART 1 - GENERAL

1.1 RELATED DOCUMENTS

A. Drawings and general provisions of the Contract, including General and Supplementary Conditions, Section 230500 and other Division 1 Specification Sections, apply to this Section.

B. LEED Building General Requirements: The Owner requires the Contractor to implement practices and procedures to meet the project's environmental performance goals, which include achieving LEED Certification. Specific project goals that may impact this area of work include: Use of recycled-content materials; use of locally-manufactured materials; use of low-emitting materials; construction waste recycling; and the implementation of a construction indoor air quality management plan. The Contractor shall ensure that the requirements related to these goals, as defined in the sections below, are implemented to the fullest extent. Substitutions, or other changes to the work proposed by the Contractor or their Subcontractors, shall not be allowed if such changes compromise the stated LEED Building Performance Criteria.

1. Comply with LEED (Leadership in Energy and Environmental Design) Green Building Rating System BD+C, Version 3.

1.2 WORK INCLUDED

A. Furnish and install all pumps for all systems which are part of the building HVAC systems. This shall include all accessories specified in this Division and as shown on the drawings.

B. All pumps shall be new and manufactured for the specific purpose of circulating chemically treated water to the building HVAC systems.

C. All pumps, circulators and system components shall be installed in accordance with state and local codes.

D. Secure all permits and local/state approval for the components as specified and included under this Section.

1.3 RELATED SECTIONS

A. Examine all drawings and criteria sheets and all other Sections of the Specifications for requirements which affect work under this Section whether or not such work is specifically mentioned in this Section.

B. Section 017419 "Construction Waste Management and Disposal" for requirements related to construction waste management and disposal at the project site.

C. Section 018113 “VOC Limits for Adhesives, Sealants, Paints and Coatings” for restrictions of VOC in adhesives, sealants, paints and coatings.

D. Section 018119 “Construction Indoor Air Quality (IAQ) Management” for requirements during construction for indoor-air-quality management.

1.4 REFERENCES

A. Applicable provisions of the following Codes and Trade Standard Publications shall apply to the work of this Section, and are hereby incorporated into, and made a part of the Contract Documents.

B. Material standards shall be as specified or detailed hereinafter and as follows:

1. NEMA MG1 – Motors and Generators; National Electrical Manufacturers Association.

2. NEMA OS1 – Sheet-Steel Outlet Boxes, Device Boxes, Covers and Box Supports; National Electrical Manufacturers Association; 1989.

3. NFPA 70 – National Electrical Code.

4. UL 778 – Standard for Motor-Operated Water Pumps.

5. ASME – Section VIII, Unfired Pressure Vessels.

C. Reference Standards

1. AFBMA: Anti-Friction Bearing Manufacturers Association.

a. 1-84 - Terminology for Anti-Friction Ball and Roller Bearings and Parts.

b. 9-84 - Load Ratings and Fatigue Life for Ball Bearings.

c. 11-78 -Load Ratings and Fatigue Life for Roller Bearings.

d. 20-77 -Metric Ball and Roller Bearings Conforming to Basic Boundary Plans.

2. ASTM: American Society for Testing and Materials.

a. A 48-Gray Iron Castings.

b. B 62-Standard Specification for Composition Bronze or Ounce Metal Castings.

c. B 584-Standard Specification for Copper Alloy Sand Castings for General Applications.

3. HI: Hydraulics Institute.

a. Hydraulic Institute Standards.

4. ANSI B15.1

5. OSHA: Occupational Safety and Health Administration, U.S. Department of Labor.

1.5 SYSTEM DESCRIPTION

A. Provide base mounted, horizontal axial split-case, or vertical mounted split-case, double-suction, single-stage centrifugal pumps, or base mounted, single-stage end suction radial pumps, as shown on the drawings. Capacity, RPM, head and electrical motor characteristics shall be as scheduled on the drawings.

1.6 SUBMITTALS

A. See Section 230500 and General Conditions for additional information.

B. Product Data: Provide certified pump curves showing performance characteristics with pump and system operating point plotted. Include NPSH curve when applicable. Include electrical characteristics, connection requirements and all dimensional data including operating weights.

C. Manufacturer's Installation Instructions: Indicate hanging and/or support requirements and recommendations.

D. Millwright's Certificate: Certify that base mounted pumps have been aligned.

E. Operation and Maintenance Data: Include installation instructions, assembly views, lubrication instructions and replacement parts list.

F. In addition to items specified elsewhere provide:

1. Large scale certified pump curves indicating operating points.
2. Detailed motor data.
3. Detailed coupling data
4. Detailed seal data.
5. All pump construction data.
6. Detailed bearing data.
7. Base details
8. Dimensioned pump and motor drawing.

1.7 QUALITY ASSURANCE

A. Manufacturer Qualifications: Company specializing in manufacturing, assembly and field performance of pumps, with minimum three (3) years of documented experience.

B. Alignment: Base mounted pumps shall be aligned by qualified millwright.

1.8 REGULATORY REQUIREMENTS

A. Products Requiring Electrical Connection: Listed and classified by UL 778 testing firm acceptable to the authority having jurisdiction as suitable for the purpose specified and indicated.

B. Provide certificate of compliance from authority having jurisdiction, indicating approval of welders.

1.9 DELIVERY, STORAGE AND HANDLING

A. All pumps shall be delivered in containers and shall be kept in a dry and protected area.

B. All pumps shall be given 2 coats of rust-resistant paint at the factory prior to installation.

1.10 ENVIRONMENTAL

A. Do not paint or install pumps when environmental conditions are outside the specific limitations of the referenced codes and manufacturer's recommendations.

PART 2 - PRODUCTS

2.1 MANUFACTURERS ACCEPTABLE FOR PRODUCT TYPES INDICATED CONTINGENT UPON PRODUCTS' COMPLIANCE WITH THE SPECIFICATIONS

A. Base mounted pumps:

1. Bell and Gossett.
2. Aurora Pump Division.
3. Peerless Pump.
4. Weinman.
5. PACO
6. Taco

B. In-line circulators:

1. Bell and Gossett.
2. Aurora Pump Division.
3. Thrush Products, Inc.
4. Weinman
5. Armstrong
6. Taco

C. Expansion Tanks

1. Bell and Gossett
2. Amtrol
3. Wessel

4. Armstrong
5. Taco

D. Air Separators

1. Bell and Gossett
2. Amtrol
3. Spirotherm
4. Wessel
5. Taco

2.2 PUMPS GENERAL

A. Statically and dynamically balance rotating parts.

B. Construction shall permit complete servicing without breaking pipe or motor connections.

C. Pumps to operate at 1750 rpm unless scheduled or specified otherwise.

D. Pumps of the same type shall be from one pump manufacturer.

E. Motors shall be in accordance with Section Motors, unless otherwise specified.

F. Provide guards around shafts and couplings in accordance with OSHA and ANSI recommendations.

G. All parts shall be suitable for variable frequency drives; including but not limited to motor, pump, all pump components, coupling, and base.

H. Design and performance requirements:

1. Scheduled design flow, design head, pump efficiency, and motor horsepower are minimum acceptable.

2. Scheduled design brake horsepower and speed are maximum acceptable.

3. Pump curve shall rise continuously from maximum flow to cut off.

4. Shut-off head shall be approximately 20 percent greater than design head, unless otherwise indicated in pump schedules.

5. Pump brake horsepower not to exceed motor horsepower rating over entire operating range (from shut-off to run-out). Motor shall not operate in service factor

6. Suitable for parallel operation.

7. Pumps shall operate within the preferred operation region as defined by the Hydraulics Institute.

8. Select pump for operation at or near peak efficiency.

9. Cavitation-free at all points on curve.

10. Impeller diameter shall not exceed 90 percent of the maximum cutwater diameter.

11. Vibration levels of pump shall be within the vibration limits established by hydraulic institute.

2.3 BASE MOUNTED PUMPS

A. Type: Centrifugal, single or multi-stage where noted, base mounted flexible coupled, single or double suction as noted.

1. Casing:

a. Casing shall be constructed of cast iron ASTM A 48 Class 30A or better.

b. Casing shall be rated for 1.25 times the scheduled working pressure with a minimum rating of 150 psig.

c. Cast iron castings shall be sound and free of shrink holes, blow holes, cracks, scale, blisters and other defects.

d. Casing shall have flanged suction and discharge per ANSI B16.1 for sizes 2-1/2 inch and larger. Smaller sizes shall be threaded connections.

e. Casing shall have a tapped and threaded plug for an air vent.

f. Casing shall be provided with a threaded drain plug at the lowest point.

g. Casing shall be provided with a seal flush connection.

h. Casing wearing rings shall be replaceable and constructed of bronze ASTM B 584 or ASTM B 62.

i. Casing shall be base supported.

j. Casing shall be vertically or horizontally split as indicated.

2. Impeller:

a. Impeller shall be constructed of one piece bronze ASTM B 584 or ASTM B 62.

b. Fully enclosed design.

c. Impeller shall be keyed to the shaft and secured with a stainless steel, 300 series washer and bolt. Bolt to tighten in direction opposite rotation of impeller.

d. Dynamically balanced for smooth, low vibration operation over the operating range from shut-off to run out.

e. Impeller shall be provided with replaceable wear rings.

3. Shaft:

a. Shaft shall be solid stainless steel AISI 316 turned, ground and polished and ring gauged for accuracy.

b. Shafts shall be polished to a minimum 16 microinch finish.

c. Shaft deflection shall not exceed 0.002 inches in the round.

4. Shaft sleeve:

a. Design such that there is no contact between the pump shaft and the pumped liquid.

b. Shaft sleeve shall be stainless steel, AISI 316.

c. Provide O-ring or gasket to prevent leakage of pumped liquid.

5. Shaft seals:

a. Mechanical type.

1) Stainless steel hardware and spring.

2) EPT rings, carbon rotating face against a tungsten carbide nickel binder seat.

3) Seals shall be balanced type for all pumps with 100 psig or greater suction pressure.

4) API 610 seal number: USTFM. Similar to John Crane Type 1 or 2 material code $\mathbf{0_{(28)}\text{-}P_{(66)}\text{-}1\text{-}\ 0_{(15)}\text{-}1}$.

5) Provide a bypass line from the discharge side of the pump casing to the seal faces. Design to ensure adequate flushing and proper lubrication.

b. Provide Doxie or equal cyclone separator on seal flushing lines on all pumps with a head of 25 PSIG or greater.

6. Bearings:

a. Grease lubricated ball bearings.
b. L-10 life minimum 100,000 hours.

7. Motor:

a. Refer to Section 230513 – Motors and Controllers for requirements.

8. Drive coupling:

a. Flexible coupling with OSHA and ANSI type coupling guard.
b. Suitable for variable speed drive.
c. Suitable for system duty, fluid, and service temperature.

9. Similar to T.B. Woods (the coupling service factor shall not be less then 2).

a. Base:

1) Cast iron or fabricated steel base with drip rim and tapped NPT connection for drain.

2) Common base for pump and motor.

10. Painting:

a. Pump components shall be thoroughly degreased, deburred and sandblasted as required before the application of any primers or paint.

b. Prime coat components before assembly; finish coat after assembly.

11. Nameplate:

a. Provide pump with a nameplate constructed of 18-8 stainless steel securely fastened to pump casing by stainless steel pins.

b. Locate nameplate for easy visibility.

12. The rating conditions and other data below, as a minimum, shall be clearly stamped on the nameplate.

a. Manufacturer, address, telephone number.
b. Pump model number.
c. Pump serial number.
d. Size (including impeller diameter scheduled in inches).
e. Type.
f. Equipment designation as listed on the pump schedule.
g. Flow scheduled (gallons per minute).
h. Dynamic head scheduled (feet of water).
i. Efficiency (percent).
j. Shut-off head (feet of water).

k. Speed (RPM).

2.4 IN-LINE CIRCULATOR

A. Casing: Bronze cast iron rated for 125 psi working pressure.

B. Impeller: Bronze.

C. Shaft: Hardened alloy steel with integral thrust collar and oil lubricated bronze sleeve bearings.

D. Seal: Carbon rotating against a stationary ceramic seat.

E. Provide additional pipe supports to support weight of pump, motor, fittings and accessories.

2.5 EXPANSION AND COMPRESSIONS TANKS

A. Provide expansion and compression tanks, air separator and other pump hydronic accessories, as shown and as scheduled on the drawings.

B. Tanks shall be the pressurized captive air bladder type.

C. Provide replaceable elastomeric bladder suitable for a maximum operating temperature of 240°F

D. Provide integral steel base ring for vertical mounting.

E. Tanks shall be constructed and certified to ASME Section VIII

1. Pressure rating150 psig
2. Temperature of 240°F

F. Provided with charging valve enclosure, remote air connector coupling, system connection and lifting rings.

G. Tanks shall be provided with factory applied rustproof coat of paint to the exterior of tanks.

2.6 AIR SEPARATORS

A. Provide air separator with flanged inlet and outlet connections.

1. Provided with drain connection with valve.
2. Shall be tangential type.
3. Bottom blow down.
4. Full size removable strainer.

B. Pressure drop shaft be 1 foot of water and maximum velocity shall be 4 fps.

2.7 MAKEUP AND RELIEF VALVES

A. See Specification Section 230519.20.

~~2.8 PRE-FABRICATED PUMP SKIDS~~

~~A. Pumps skid are to be factory fabricated and tested by a manufacturer regularly engaged in factory fabricated mechanical system construction. All equipment and pipe describe below and noted on plans as part of skids are to be furnished and installed by skid manufacturer.~~

~~B. Pump skids to be manufactured by Epsilon Industries.~~

~~C. Skids are to be mounted on welded HSS steel base frames with 3/4" check plate steel floors. Base frame and floor are to be primed and epoxy coated at factory.~~

~~D. All equipment and components are to be factory installed. No components are to ship loose for field installation. All supports and brackets are to be primed and epoxy coated at factory.~~

~~E. All pump are to have liquid filled pressure gauges installed with stainless steel tubing.~~

~~F. All supply and return lines are to have visual thermometers.~~

~~G. Starters and/or variable frequency drives are to be factory supplied, mounted, and wired to motors.~~

~~H. Description Pump skid one – Chilled Water/Condenser Water:~~

~~1. Qty (3) condenser pumps. Complete with suction diffusers, triple duty valves, and motor wired to factory provided and installed disconnect.~~

~~2. Qty (3) chilled water pumps. Complete with suction diffusers, triple duty valves, and wired to factory provided and installed 6-pulse VFD.~~

~~3. Qty (8) 6" butterfly manual isolation valves.~~

~~4. Qty (8) 8" butterfly manual isolation valves.~~

~~5. All pumps installed with flex connections.~~

~~6. All pumps with liquid filled pressure gauges with stainless steel tubing and thermometers.~~

~~7. Qty (1) lot of a gauges and thermometers as shown on piping one line.~~

~~I. Description Pump skid two – Hot Water:~~

~~1. Qty (2) perimeter heating pumps. Complete with suction diffusers, triple duty valves, and motor wired to factory provided and installed disconnect.~~

2. ~~Qty (2) reheat pumps. Complete with suction diffusers, triple duty valves, and motor wired to factory provided and installed 6-pulse VFDs.~~

3. ~~Qty (2) shell and tube heat exchangers (see schedule for performance.~~

4. ~~Qty (1) make-up water system with back-flow preventer and PRV.~~

5. ~~Qty (1) expansion tank.~~

6. ~~Qty (1) air separator.~~

7. ~~Qty (1) pot feeder.~~

8. ~~Qty (10) 6" butterfly manual valves.~~

9. ~~Qty (4) 3" butterfly manual valves.~~

10. ~~Qty (1) 2 way 2.5" globe valve.~~

11. ~~Qty (1) 3 way 3" mixing globe valve.~~

12. ~~All pumps with liquid filled pressure gauges with stainless steel tubing and thermometers.~~

13. ~~Qty (1) lot of a gauges and thermometers as shown on piping one line.~~

~~J. See detail section in plan for size and layout requirements.~~

~~K. See detail section in plans for complete piping one lines.~~

~~L. Refer to pipe and hydronic specification sections.~~

PART 3 – EXECUTION

3.1 PUMP INSTALLATION

A. Pumps shall be installed so as to ensure easy accessibility for service or removal and replacement of all components such as, but not limited to, impellers, motors, drive couplings, bearings, strainers, other pump appurtenances and isolators.

B. The Contractor shall receive and inspect all pumps and motors to ensure they are received without defect.

C. All defective or damaged pumps shall be returned to the manufacturer by the Contractor for replacement.

D. The Contractor shall properly protect all equipment to prevent damage from water, dirt, etc. Protection shall include temporary plastic wrap to keep equipment in original factory condition.

E. Set pump on concrete base, anchor, level and grout according to manufacturer's instructions. Where specified or where indicated in the equipment schedule on the mechanical drawings provide vibration isolators under pump base.

F. Provide line sized shutoff valve and strainer on suction and line sized silent check valve and flow control balancing valve on discharge unless otherwise noted on mechanical drawings.

G. Decrease from line size, with long radius reducing elbows or reducers. Support piping adjacent to pump such that no weight is carried on pump casings. Provide supports under elbows on pump suction and discharge line sizes 4 inches and over.

H. Ensure pumps operate at specified system fluid temperatures without vapor binding and cavitation, are non-overloading in parallel or individual operation and operate within 25 percent of midpoint of published maximum efficiency curve.

I. Refer to pump detail on mechanical drawings for other accessories to be provided.

J. Provide drains for bases and stuffing boxes piped to and discharging over floor drain. Provide air cock and drain connection on horizontal pump casings.

K. Manufacturer representative shall check, laser align, and certify base mounted pumps 25 motor horsepower and over, before start-up. Pump and drive shall be aligned in accordance with Hydraulic Institute Standards.

L. Pumps shall be installed so as to ensure easy accessibility for service or removal and replacement of all components such as, but not limited to, impellers, motors, drive couplings, bearings, strainers, other pump appurtenances, isolators, and flex connections.

M. The Contractor shall receive and inspect all pumps and motors to ensure they are received without defect. All defective or damaged pumps shall be replaced.

N. The Contractor shall properly protect all equipment to prevent damage from water, dirt, etc.

3.2 EXPANSION TANK

A. Provide where indicated in the drawings.

B. Install in accordance with manufacturer’s installation instructions.

C. Change with air to the specified pressure prior to the system fill.

3.3 AIR SEPARATOR

A. Provide where indicated on the drawings.

B. Install in accordance with manufacturer's instructions.

END OF SECTION

SECTION 23 2223 – STEAM AND CONDENSATE SPECIALTIES

PART 1 – GENERAL

1.1 RELATED DOCUMENTS

A. Drawings and general provisions of the Contract, including General and Supplementary Conditions, Section 230500 and other Division 1 Specification Sections, apply to this Section.

B. LEED Building General Requirements: The Owner requires the Contractor to implement practices and procedures to meet the project's environmental performance goals, which include achieving LEED Certification. Specific project goals that may impact this area of work include: Use of recycled-content materials; use of locally-manufactured materials; use of low-emitting materials; construction waste recycling; and the implementation of a construction indoor air quality management plan. The Contractor shall ensure that the requirements related to these goals, as defined in the sections below, are implemented to the fullest extent. Substitutions, or other changes to the work proposed by the Contractor or their Subcontractors, shall not be allowed if such changes compromise the stated LEED Building Performance Criteria.

1. Comply with LEED (Leadership in Energy and Environmental Design) Green Building Rating System BD+C, Version 3.

1.2 WORK INCLUDED

A. Furnish and install all steam and condensate specialties and equipment to make complete and operations systems.

B. All systems shall be installed in accordance with local code including vent piping and relief discharge termination points.

C. Secure all permits and local/state approvals for the installation of all components included under this Section.

1.3 RELATED SECTIONS

A. Examine all drawings and criteria sheets and all other Sections of the Specifications for requirements which affect work under this Section whether or not such work is specifically mentioned in this Section.

B. Section 017419 "Construction Waste Management and Disposal" for requirements related to construction waste management and disposal at the project site.

C. Section 018113 "VOC Limits for Adhesives, Sealants, Paints and Coatings" for restrictions of VOC in adhesives, sealants, paints and coatings.

D. Section 018119 “Construction Indoor Air Quality (IAQ) Management” for requirements during construction for indoor-air-quality management.

1.4 REFERENCES

A. Applicable provisions of the following Codes and Trade Standard Publications shall apply to the work of this Section, and are hereby incorporated into, and made a part of the Contract Documents.

B. Material standards shall be as specified or detailed hereinafter and as follows:

1. ANSI: American National Standards Institute
2. A13.1: Scheme for Identification of Piping Systems
3. B16.1: Cast Iron Pipe Flanges and Flanged Fittings
4. B16.3: Malleable Iron Threaded Fittings
5. B16.4: Cast Iron Threaded Fittings
6. B31.1: Power Piping
7. B36.10: Welded and Seamless Wrought Steel Pipe

8. ASTM: American Society for Testing and Materials

a. A 234/A23AM: Pipe Fittings of Wrought Carbon Steel and Alloy / Rev A: Steel for Moderate and Elevated Temperature

b. A 395 – Standard Specification for Ferric Ductile Iron Pressure-Retaining Castings for Use at Elevated Temperatures

c. F 36: Compressibility and Recovery of Gasket Materials

d. F 37: Sealability of Gasket Material

9. ASME

a. ASME (BPV IX) – Boiler and Pressure Vessel Code, Section IX – Welding and Brazing Qualification

b. ASME B16.3 – Malleable Iron Threaded Fittings Class 150 and 300

c. ASME B16.18 – Cast Copper Alloy Solder Joint Pressure Fittings

d. ASME B16.22 – Wrought Copper and Copper Alloy Solder Joint Pressure Fittings

e. ASME B31.1 – Code for Power Piping

f. ASME B31.9 – Building Services Piping; (with Addenda)

1.5 DESCRIPTION

A. All specialties shall be a product of the United States of America. Mill certificate shall be provided as required.

1.6 SUBMITTALS

A. See Section 230500 and General Conditions for additional requirements.

B. Manufacturer's Installation Instructions: Indicate hanging and support methods, joining procedures.

C. Maintenance Data: Include installation instructions, spare parts lists, exploded assembly views.

1.7 QUALITY ASSURANCE

A. Installer: Company specializing in performing work of the type specified in this section, with documented experience.

1.8 REGULATORY REQUIREMENTS

A. Conform to ASME B31.9 code for installation of steam and condensate piping systems including specialties.

B. Welding Materials and Procedures: Conform to ASME (BPV IX) and applicable state labor regulations.

1.9 DELIVERY, STORAGE AND HANDLING

A. Provide temporary end caps and closures piping and fittings. Maintain in place until installation.

B. Protect piping systems and specialties from entry of foreign materials by temporary covers, completing sections of the work, and isolating parts of completed system.

1.10 ENVIRONMENTAL

A. Do not install piping when environmental conditions are outside the specific limitations of the referenced codes and manufacturer's recommendations.

PART 2 – P RODUCTS

2.1 PRESSURE REDUCING VALVES.

A. Acceptable manufactures subject to compliance with the specifications:

1. Spence
2. Leslie
3. Copes Vulcan

4. Spirax Sarco
5. Hoffman Specialty

B. Furnish and install, as shown and scheduled on the drawings, steam pressure reducing valves of the self-operated, external pilot type, single seated, normally closed, metal diaphragm actuated, similar to Spence Type ED.

C. Valves shall regulate an accurate delivery pressure within ±1 lb. throughout the range of pressure and flow conditions scheduled, regardless of deviation of the inlet steam pressure. Valves shall function quietly and shut tight on deadend shutoff. Regulators shall respond quickly and accurately without pressure deviation when installed on a 2-stage reduction.

D. Bodies 2" and under shall have screwed ends, cast iron body, 250 lb. working pressure construction, size 2 1/2" and up shall have flanged ends. Seats and discs shall be guaranteed by the manufacturer against the wire drawing action of steam. Stems shall be stainless steel.

E. Main valve spring shall be installed in the general area of the diaphragm pressure plate to minimize stem guiding surface and to keep the spring out of the patch of the steam. Stuffing boxes will not be permitted. All parts must be accessible and replaceable without removal of the valve from the line.

F. The pressure pilot shall be separate from the main valve and connected to it by unions. A strainer screen shall be built into the pilot inlet. Pilot shall be interchangeable with all sizes of main valves and connected to the main valve by unions. Bleedports and other orifice fittings shall be externally connected to facilitate troubleshooting and cleaning. Internal bleedports will not be permitted.

G. Base bypasses or internal pressure relieving port, when used, shall be located away from the jetting action of the flow through the seat and disc.

H. The maximum or end point capacity of the regulator shall not pass more than 20% in excess of the required capacity. (Safety valve to be sized to pass 100% of the maximum or end point capacity.)

I. Valves shall be sized so that the valve body inlet velocity does not exceed 8000 fpm and the valve body outlet velocity does not exceed 20,000 fpm or the combined inlet and outlet velocity does not exceed 28,000 fpm.

J. Provide inlet gate valve, steam strainer, outlet gate valve, bypass and safety valve as shown on the drawings.

K. Provide noise suppressors and muffling orifice plates downstream of each PRV valve as shown on the drawings. Suppressors similar to Spence Model "B".

1. Each suppressor shall have its inlet the size of the reducing valve and be expanded to the outlet side equal to the final pipe size as shown on the plans. Suppressor shall be deceptive-reactive type, straight through design with no

diverting baffles on its interior. All internal acoustical packing shall be of corrosion resistant material. Unit shall be capable of reducing the noise emanating from the downstream piping by at least 20 dB. Submit laboratory test data to support performance capabilities.

2.2 SAFETY VALVES

A. Acceptable manufactures subject to compliance with the specifications:

1. Kunkle
2. Spence
3. Dresser Inc.

B. Safety valves shall be of size and setpoint as required by PRV manufacturer.

C. Valves shall be cast iron body, lead seal, asbestos free packing and gasket and brass shaft. All internal parts made of cold rolled steel shall be cadmium plated. Provide drain pipe and valve to nearest floor drain and flexible connectors at pipe discharge as shown on the drawings.

2.3 STEAM TRAPS

A. Acceptable manufactures subject to compliance with the specifications:

1. Armstrong
2. Sarco
3. Velan
4. Strong

B. Provide steam traps at all low points of the low pressure medium pressure and high pressure steam systems, at equipment and as shown on the drawings and required by job conditions. Steam traps used for equipment using low pressure steam (LPS) shall be the closed float and thermostatic type.

C. Traps used for medium (MPS) or high pressure steam (HPS) shall be Class 300 inverted bucket type.

D. Float and thermostatic type traps shall have cast iron body, ASTM A278, Class 30. Pipe connections shall be in the body and the entire trap mechanism attached to the cap. Float and mechanism shall be stainless steel with heat treated chrome steel valve. The float shall be Heliarc welded to avoid introduction of dissimilar metals. The thermostatic air vent shall be a balanced pressure phosphor bronze disc diaphragm type with stainless steel valve and seat.

E. Traps shall be sized by SHEMA ratings with applicable safety factor applied. See execution section.

F. Inverted bucket traps for high pressure service, Class 300, shall be fused steel with cap and body forgings made of 1030 carbon steel, inlet tube of alloy steel pipe, gasket bolts

of high temperature low alloy steel, nuts of semi-finish hex, heat treated, stainless steel valve retainer, lever and guide pin assembly, chrome steel, heat treated valve and valve seat. Bucket shall be stainless steel cap and tube, cast iron weight.

G. The HVAC Contractor shall submit orifice size/capacity characteristic for each trap furnished, dimensional and sectional drawings, and list of materials of construction.

H. A suitable strainer with blow-off valve shall be installed ahead of each steam or drain trap.

I. Monovalve float and thermostatic traps shall have a built-in strainer and check valve, stainless steel float, trim and pivots, cast iron body and stainless steel highly sensitive, bi-metal element with stellited seat made of hard stainless steel with mirror finish and ball bearing precision.

J. Drip points shall be provided at the ends of mains and at points where a rise in elevation is required, whether such traps are shown on the drawings or not, to suit the job installation conditions. Provide a dirt pocket of suitable size and length as detailed on the drawings fit with a cap. Drip traps shall be 3/4" size unless otherwise indicated.

2.4 CONDENSATE PUMP SETS (ELECTRIC)

A. Acceptable manufactures subject to compliance with the specifications:

1. Flotronics
2. Shipco
3. Skidmore
4. Domestic

B. Furnish and install according to details and schedule on the drawings and manufacturer's instructions, duplex condensate pump sets.

C. All controls for the pump operation shall be prewired and unit shall need a single electrical connection to be fully operational.

D. Unit shall consist of cast iron receiver, inlet strainer, (2) pumps (maximum 2'-0" NPSH each), float switches, electrical controls and accessories, as follows:

1. Receiver shall be manufactured of close grained cast iron. The receiver shall be equipped with externally adjustable 2-pole float switch, water level gauge and eye bolts. Pressure gauges shall be provided in the field by the Contractor.

2. A cast iron inlet strainer with vertical self-cleaning bronze screen and large dirt pocket and (1) dial thermometer with well shall be mounted on the receiver. The screen shall be easily removable for cleaning, requiring no additional floor space for servicing.

3. The centrifugal condensate pumps shall be flanged mounted on the receiver. Provide bronze isolation valves between each pump and the receiver. The

isolation valves shall be of the design that allows the entire pump and motor assembly to be removed for service, including the lower half of the pump case for wear ring replacement without draining the receiver. Pumps shall be close coupled vertical design, permanently aligned, bronze fitted and shall be equipped with stainless steel shaft, enclosed bronze impeller, renewable bronze case ring and mechanical shaft seal. Each pump shall be close coupled to a vertical dripproof motor. Pump capacities, motor HP and RPM, electrical characteristics and receiver size shall be as scheduled on the drawings. The unit manufacturer shall furnish, mount on the pump unit and wire a NEMA 4X control cabinet with piano hinged door and grounding lug, containing the following:

E. Disconnect switch and cover interlock to ensure complete electrical deactivation of the entire condensate handling system.

F. Magnetic starters (each having [3] overload relays) with fused line protection for each pump. Magnetic starters shall be designed to NEMA Standards and shall be as manufactured by General Electric, Westinghouse or Square D.

G. (2) Auto-Off-Test (A-O-T) selector switches.

H. Control circuit transformer having fused and grounded secondary when motor voltage exceeds 120V.

I. Numbered terminal strip.

J. Pump running lights.

K. Hour meters.

L. High level alarm and switch with auxiliary contacts for tie-in to BMS.

M. Condensate return system controls shall be provided by the unit manufacturer, as follows:

1. When the level in the unit receiver rises to a preset high level, a mechanical alternator shall be provided to alternately activate the condensate pumps when the H-O-A selector switch is placed in the automatic position.

2. When the pump has discharged the water and the condensate level in the receiver recedes to a preset low level the alternator will deactivate and stop the pump.

3. If the condensate level in the receiver should continue to rise, with the lead pump running, to a second high level, the alternator will activate the second pump and will continue to operate both pumps until the water level recedes to the preset low level at which point the pumps will be deactivated.

4. The operation of each pump may be tested by moving the A-O-T selector switch to "test". When test is complete the selector switch shall be placed in "automatic" position.

N. Unit shall have factory installed wiring which shall be numbered for easy identification and the numbers shall coincide with those shown on the wiring diagrams.

O. The unit shall be factory tested as a complete unit. The pump manufacturer shall furnish complete elementary and connection wiring diagrams, piping diagrams, installation and operation instructions.

2.5 PRESSURE POWERED CONDENSATE PUMP SETS

A. Provide steam operated duplex mechanical condensate pumping system as specified herein and detailed on the drawings

1. Acceptable manufactures subject to compliance with the specifications:

a. Armstrong International Inc.
b. Spirax-Sarco

B. Motive force to remove condensate from the receiving vessel.

1. Steam.

C. The use of the following shall not be permitted:

1. Electricity.
2. Seals.
3. Packing.

D. The system shall be a complete pre-piped factory package consisting of, but not limited to:

1. Receiver tank.
2. Pump traps.
3. Interconnecting piping.
4. Valves.
5. Fittings.

E. All components shall be pre-piped at the factory and mounted on a steel frame and base.

F. Construction

1. Pump trap vessel body and receiver vessel shall be constructed of:

a. Carbon steel.
b. Maximum height of pump trap package shall not exceed 96”.
c. Pump internals shall consist of an all stainless steel.

d. Float operated mechanism with actuating springs constructed of:

1) Inconel X-750 material.

e. Motive and vent valve/seats shall be replaceable.

2. Liquid flow pipe connections shall be NPT.

3. Provide armored gauge glasses on receiver and pump traps to observe operation.

4. Each pump shall be equipped with:

a. Inlet shut off valve

b. Inlet check valve

1) Inlet check valve shall be swing type for maximum flow at 0” fill head.

c. Unions

d. Outlet check valves.

e. Discharge check

1) Valve shall be spring-loaded, non-slam design constructed of stainless steel material.

5. All internal valve components shall be stainless steel.

6. Discharge of each pump is to be independent (i.e. not piped to a common outlet) for separate field connections.

7. Provide custom design removable and reusable insulation jacket.

8. Each pump shall be equipped with a digital cycle counter with auxiliary contacts to monitor the amount of condensate being returned.

9. Steel receiver tank shall be:

a. Vented type, with a minimum 50 gallon capacity
b. Shall be 150 PSIG ASME coded vessel.

10. Vent connection size shall be 3 inch, npt connection type.

11. Inlet condensate connection shall be 4 inches, npt connection type.

G. The packaged condensate removal system shall be factory tested.

H. Stated capacities shall be tested and verified utilizing a minimum of 200 F hot condensate (water) and steam as the motive source.

1. Testing with Air as the motive source and cold water SHALL NOT be accepted.

I. Manufacturer shall supply certification of testing to ensure compliance.

J. The system manufacturer shall provide:

1. Complete installation instructions
2. Operation instructions
3. Piping diagrams
4. Wiring diagrams.
5. Anything else required for a complete and operable system.

2.6 FLASH TANKS

A. Acceptable manufactures subject to compliance with the specifications:

1. Modern welding.
2. Armstrong
3. Wessel

B. Provide flash tanks as indicated on the drawings. Each tank shall be ASME rated. All seams shall be continuously welded.

C. The minimum ASME rating shall be 125 PSIG unless scheduled greater.

D. The minimum vent size shall be 6”.

E. Tanks shall have (1) shop and (1) field coat of iron oxide primer. Provide tappings and supports as required and shown on the drawings. Tank shall have minimum 1/4" thick walls and shall be fully insulated.

F. Provide trap arrangement, relief valve and vent (pipe to atmosphere) and connections to low pressure steam, as shown on the drawings.

2.7 STEAM SEPARATOR

A. Acceptable manufactures subject to compliance with the specifications:

1. Spence
2. Wright Austin
3. Penn Separator Corp.
4. Sarco
5. Boylston Steam Specialty Co.

B. Pressure rating ANSI class to match the service.

C. Provided with drip assembly.

D. Unit shall be a minimum of 99.0% efficient removing particulate and liquid 10 microns or larger in size.

2.8 EXHAUST HEAD

A. Acceptable manufactures subject to compliance with the specifications:

1. Penn Separator Corp.
2. Boylston Steam Specialty Co.
3. Sarco

B. Pressure rating suitable for the service.

C. Sized to pass the rated discharge.

D. Self draining and self cleaning.

E. Similar to Penn Separator Corp. Cyclone Exhaust Head.

PART 3 - EXECUTION

3.1 GENERAL

A. Install in accordance with manufacturers recommendations.

B. Install in accordance with all applicable codes.

3.2 PRESSURE REDUCING VALVES

A. Provide inlet gate valve, line size steam strainer, outlet gate valve, bypass and safety valve as shown on the drawings.

3.3 SAFETY VALVES

A. Provide as indicate, required by code, and as recommended by manufacturer.

3.4 STEAM TRAPS

A. General

1. Provide drip trap assemblies as follows:

a. Steam piping

1) Maximum of 75 feet intervals.
2) At rising points in piping
3) At the bottom of all vertical pipes.
4) At all steam entrance points at building wall.

B. Traps

1. Provide dirt pockets at all traps.

   a. Dirt pockets shall be a minimum of 12 inches long.

2. Provide union on both sides.

3. Provide inlet with strainer

4. Provide discharge check valve.

5. Provide discharge shut off valve.

6. Locate traps.

   a. So all traps can be accessed for replacement and maintenance.

   b. At steam equipment.

   c. Verify size, number, and locations.

   d. Locate so as not to be subject to freezing.

   e. For domestic hot water heaters coordinate with plumbing and install temperature regulators provided by plumbing.

7. Connect to the appropriate condensate return system.

C. Sizing

STEAM TRAP SIZING					
SYSTEM	**SERVICE**	**QUANTITY**	**TYPE**	**SAFETY FACTOR (EA. Trap)**	**MAXIMUM PRESSURE DROP**
LPS	Modulating Equipment	1	F&T	300%	1 psi
LPS	Convection Heating	1	F&T	200%	1 psi
LPS	Preheat coil	2	F&T	300%	1/2 psi
LPS	Absorber	2	F&T	400%	1 psi
LPS	End of main drips	1	F&T	300%	1 psi
LPS	Drips on Main to 6"	1	F&T	300%	1 psi
LPS	Drips on Main 8" & up	2	F&T	300%	1 psi
MPS	Modulating Equipment	1	Inverted Buckett	300%	1 psi

STEAM TRAP SIZING					
SYSTEM	**SERVICE**	**QUANTITY**	**TYPE**	**SAFETY FACTOR (EA. Trap)**	**MAXIMUM PRESSURE DROP**
MPS	Convection Heating	1	Inverted Buckett	200%	1 psi
MPS	Preheat coil	2	Inverted Buckett	300%	1/2 psi
MPS	End of main drips	1	Inverted Buckett	300%	1 psi
MPS	Drips on Main to 6"	1	Inverted Buckett	300%	1 psi
MPS	Drips on Main 8" & up	2	Inverted Buckett	300%	1 psi
HPS	Modulating Equipment	1	Inverted Buckett	300%	1 psi
HPS	Convection Heating	1	Inverted Buckett	200%	1 psi
HPS	Preheat coil	2	Inverted Buckett	300%	1/2 psi
HPS	End of main drips	1	Inverted Buckett	300%	15% of system psi
HPS	Drips on Main to 6"	1	Inverted Buckett	300%	15% of system psi
HPS	Drips on Main 8" & up	2	Inverted Buckett	300%	15% of system psi

1. Minimum trap size shall be ¾”.

3.5 FLASH TANKS

A. Provide as indicated and as required by field installation.

B. Provide a minimum of 6” vent unless indicated on the documents to be larger.

3.6 CONDENSATE PUMPS (ELECTRIC)

A. Install per manufacturer’s instructions.

B. Test control and operation.

3.7 PRESSURE POWERED CONDENSATE PUMP

A. Install per manufacturer’s instructions and project specific drawings and test for proper operation and control.

3.8 TESTING

A. Furnish all labor, material, instruments, supplies and services and bear all costs for the accomplishment of the tests herein specified. Correct all defects appearing under test and repeat the tests until no defects are disclosed; leave the equipment clean and ready for use.

B. Perform all tests other than herein specified which may be required by Legal Authorities or by Agencies to whose requirements this work is to conform.

C. Furnish all necessary testing apparatus, make all temporary connections and perform all testing operations required, at no additional cost to the Owner.

D. All equipment and piping installed under this Contract shall be tested and found tight. Insulated or otherwise concealed piping shall be tested before being closed in. All leaking joints shall be corrected, retested and found tight. Such tests shall conform to the requirements of Local Codes but shall not be less than the equivalent of the tests called for herein. Threaded joints that leak shall not be seal-welded to correct leakage.

E. Tests performed shall not relieve the Contractor of his responsibility for leaks which may develop after the tests are made.

F. All piping systems shall be subjected to a hydrostatic test at 1 1/2 times operating pressure measured at the highest point in the system, for a period of (4) hours without drop in pressure.

G. Tests of piping systems shall be conducted before connections to equipment are made and before piping is covered, buried or otherwise concealed.

H. Systems found to have leaks shall be subjected to further tests when faulty joints have been repaired or replaced.

I. Welded joints shall be subjected to a hammer test while under pressure.

3.9 STEAM SEPARATOR

A. Install in accordance with manufactures recommendations in the locations specified. Shown on plans and/or detailed.

B. Pipe drip assembly.

3.10 EXHAUST HEAD

A. Install as indicated and in accordance with manufactures recommendations.

B. Increase pipe size to match exhaust head.

C. Pipe drain full size to nearest drain or to the location indicated.

END OF SECTION 232223

SECTION 23 2500 – CHEMICAL WATER TREATMENT

PART 1 - GENERAL

1.1 RELATED DOCUMENTS

A. Drawings and general provisions of the Contract, including General and Supplementary Conditions, Section 230500 and other Division 1 Specification Sections, apply to this Section.

B. LEED Building General Requirements: The Owner requires the Contractor to implement practices and procedures to meet the project's environmental performance goals, which include achieving LEED Certification. Specific project goals that may impact this area of work include: Use of recycled-content materials; use of locally-manufactured materials; use of low-emitting materials; construction waste recycling; and the implementation of a construction indoor air quality management plan. The Contractor shall ensure that the requirements related to these goals, as defined in the sections below, are implemented to the fullest extent. Substitutions, or other changes to the work proposed by the Contractor or their Subcontractors, shall not be allowed if such changes compromise the stated LEED Building Performance Criteria.

1. Comply with LEED (Leadership in Energy and Environmental Design) Green Building Rating System BD+C, Version 3.

1.2 WORK INCLUDED

A. Furnish and install all equipment, controls, chemicals, labor and accessories to make a complete system for chemically treating the HVAC hydronic systems specified herein.

B. All chemicals shall be environmentally safe and compatible.

C. The Mechanical Contractor shall engage the services of a nationally recognized water treatment manufacturer with local representative of such manufacturer to provide a complete water treatment service, designed to minimize corrosion and scale formation in all water systems. This service shall include providing the equipment, controls, chemical feed pumps, shot feeders, all chemicals and consulting analysis service for the initial start-up of each system.

D. The Mechanical Contractor shall provide complete electrical control interlocking wiring for all chemical feeding and control equipment, for a complete system. All electrically driven equipment, such as pumps, shall be provided with starters and disconnect switches under this Contract.

1.3 RELATED SECTIONS

A. Examine all drawings and criteria sheets and all other Sections of the Specifications for requirements which affect work under this Section whether or not such work is specifically mentioned in this Section.

B. Section 017419 “Construction Waste Management and Disposal” for requirements related to construction waste management and disposal at the project site.

C. Section 018113 “VOC Limits for Adhesives, Sealants, Paints and Coatings” for restrictions of VOC in adhesives, sealants, paints and coatings.

D. Section 018119 “Construction Indoor Air Quality (IAQ) Management” for requirements during construction for indoor-air-quality management.

1.4 REFERENCES

A. EPA Regulation.

B. FDA Requirements.

C. ASTM: American Society for Testing and Materials.

1. D596-83 - Standard Methods of Reporting Results of Analysis of Water.

D. NEMA: National Electric Manufacturers Association.

E. NFPA: National Fire Protection Association.

F. UL: Underwriters Laboratory Inc.

1.5 SUBMITTALS

A. See Section 230500 and General Conditions for additional requirements.

B. Shall be in accordance with all other specified requirements as well as those following.

C. Product Data: Submit manufacturer’s technical product data, indicating chemical treatment materials, chemicals and equipment. This shall include MSDS and technical data sheets as well as all EPA, FDA, and or other environmental approvals.

D. Shop Drawings: Submit the initial manufacturer of all components and drawings indicating system schematics, equipment locations, and control schematics. In addition a clear concise written sequence of operation shall be provided.

E. Water analysis.

F. A complete scale drawing of the equipment installation

G. Submit manufacturer’s installation instructions.

H. Submit reports indicating pre-cleaning completed and submit analysis of system water after cleaning and after treatment.

I. Submit reports indicating start-up of system is completed and is operating properly.

J. Submit an Operations Manual providing equipment manuals, product MSDS and technical data sheets, treatment log sheets, testing program, and description of operating parameters.

K. Product Data: Provide chemical treatment materials, chemicals and equipment including electrical characteristics and connection requirements.

L. Shop Drawings: Indicate system schematic, equipment locations, control schematics, electrical characteristics and connection requirements.

M. Manufacturer's Installation Instructions: Indicate placement of equipment in systems, piping configuration and connection requirements.

N. Manufacturer's Field Reports: Indicate start-up of treatment systems when completed and operating properly. Indicate analysis of system water after cleaning and after treatment.

O. Certificate: Submit certificate of compliance for authority have jurisdiction indicating approval of chemicals and their proposed disposal.

P. Project Record Documents: Record actual locations of equipment and piping, including sampling points and location of chemical injectors.

Q. Operations and Maintenance Data: Include data on chemical feed pumps, agitators and other equipment including spare parts lists, procedures and treatment programs. Include step-by-step instructions on test procedures including target concentrations.

1.6 QUALITY ASSURANCE

A. The water treatment company shall have at least (5) years experience in the treating and servicing of systems as outlined above. All service must be supervised by a chemist or a chemical engineer. The water treatment company shall have full time service located within the trading area of the job site. Manufacturers shall be insured for not less than $10,000,000.

B. Installer Qualifications: Company specializing in performing the type of work specified in this section with minimum five (5) years of documented experience and approved by manufacturer.

1.7 REGULATORY REQUIREMENTS

A. Conform to applicable code for addition of non-potable chemicals to building mechanical systems and to public sewage systems.

B. Products Requiring Electrical Connection: Listed and classified by UL testing firm and acceptable to the authority having jurisdiction as suitable for the purpose specified and indicated.

1.8 MAINTENANCE SERVICE

A. Service Period: Provide chemicals and service program for a period of one (1) year from start-up date of condensing equipment, including the following:

1. Initial water analysis of water supply and recommendations.
2. Systems start-up assistance.
3. Training of operating personnel.
4. Periodic field service and consultation.
5. Customer reports and log sheets.
6. Laboratory technical assistance.

B. Provide monthly technical service visits to perform field inspections and make water analysis on site. Detail findings in writing on proper practices, chemical treating requirements and corrective actions needed. Submit two copies of field service report after each visit.

C. Provide laboratory and technical assistance services during this maintenance period.

D. Include two (2) hour training course for operating personnel, instructing them on installation, care, maintenance, testing and operation of water treatment systems. Arrange course at start up of systems.

E. Provide on site inspections of equipment during scheduled or emergency shutdown to properly evaluate success of water treatment program and make recommendations in writing based upon these inspections.

1.9 MAINTENANCE MATERIALS

A. Supply sufficient chemicals for treatment and testing during warranty period.

PART 2 - PRODUCTS

2.1 GENERAL

A. Acceptable manufacturers contingent upon compliance with the specifications.

1. Diversey Corp.
2. Nalco Chemical Company
3. Betz Laboratory
4. Barclay Chemical, Inc.

B. Description of Work

1. The HVAC Contractor shall engage the services of a nationally recognized water treatment manufacturer or local representative of such manufacturer to provide a complete water treatment service, designed to minimize corrosion and scale formation in all water systems. This service shall include providing the equipment, controls, chemical feed pumps, bypass feeders, all chemicals and

consulting analysis service for the initial clean out and start-up period of each system.

2. Service Period: Provide chemicals and service program for period of (1) year from start-up date of condensing equipment, including the following:

   a. Initial water analysis of water supply and recommendations.
   b. Systems start-up assistance.
   c. Training of operating personnel.
   d. Periodic field service and consultation.
   e. Customer reports and log sheets.
   f. Laboratory technical assistance.

3. Refer to Division 26 for the following work:

   a. Power supply wiring from power source to power connection on water treatment equipment. Include starters, disconnects, and required electrical devices, except as specified as furnished, or factory installed, by manufacturer.

   b. Interlock wiring between electrically operated equipment units; and between equipment and field installed control devices.

      1) Interlock wiring specified as factory installed is work of this section.

4. Provide the following electrical work as work of this section, complying with requirements of Division 26.

   a. Control wiring between field-installed controls, indicating devices, and unit control panels.

C. Quality Assurance

1. The water treatment company shall have at least (5) years experience in the treating and servicing of systems as outlined above. All service must be supervised by a Chemist or a Chemical Engineer. The water treatment company shall have full time service located within the trading area of the job site. Manufacturers shall be insured for not less than $10,000,000.

2. Codes and Standards

   a. UL and NEMA Compliance: Provide electrical components required as part of condenser water treatment equipment, which are UL listed and labeled and comply with NEMA standards.

   b. NEC Compliance: Comply with National Electrical Code as applicable to installation, electrical connections, and ancillary electrical components of condenser water treatment equipment.

c. Chemical Standards: Provide only chemical products which are acceptable under state and local pollution control regulations.

d. Provide any and all necessary safety and government approval literature on recommended products and assure compliance with federal, state and local regulations.

2.2 PRE-CLEANING

A. The HVAC Contractor shall closely coordinate with the water treatment company to insure that each piping system is properly cleaned prior to placing in use and that no system is filled with water without proper water treatment chemicals being added.

1. Pre-cleaning chemical shall be TSP based and shall contain a flash rusting protection package. Disposal shall be to an approved waste treatment system.

2. Procedures

a. Flush all systems and then install pre-cleaning chemicals to remove construction deposits such as pipe dope, oils, loose mill scale, and other extraneous materials.

b. Add recommended dosages and circulate for 6 to 8 hours.

c. Drain and flush until total alkalinity of rinse water is equal to make-up water.

d. Remove, clean, and replace strainer screens.

e. Refill with clean water to start treatment procedures.

2.3 HOT WATER AND CHILLED WATER SYSTEMS (CLOSED LOOP)

A. Equipment

1. Provide a 5 gallon capacity, bypass feeder with the wide mouth opening and quick disconnect cap for each hot water and chilled water system. Pressure rating of shot feeders shall be at least 125 psi. Provide all piping, valves, and accessories as detailed on the drawings.

a. Feeder shall be steel
b. ASME rated for 125 psig

B. Chemicals

1. Hot Water (for loops operating at temperatures exceeding 120°F)

a. Provide a nitrite based program designed to provide metal corrosion and scale protection. Program must be designed to provide corrosion rates of not more than 5 mpy for mild steel and 1 mpy for copper.

2. Chilled Water (for loops operating at temperatures below 120°F)

a. Provide a molybdenum based program designed to provide multi-metal corrosion and scale protection. Program must be designed to provide corrosion rates of not more than 5 mpy for mild steel and 1 mpy for copper.

2.4 CONDENSER WATER (COOLING TOWERS)

A. Equipment

1. Provide an automatic prefabricated analyzing control and chemical feed system consisting of continuous monitoring of system water with the following features.

a. Programmable temperature compensated bleed control for TDS with Hi-Lo and bleed time alarm.

b. Programmable inhibitor feed with water meter control.

c. Programmable multi-event dual biocide control with pre-bleed and lock-out functions.

d. Low chemical and no flow alarms.

e. Keypad selectable controls and digital readouts.

f. Flow Sensor - Manifold Assembly: Conductivity

1) Maximum Sampling Pressure: 100 psi.
2) Integrally mounted within control panel.
3) Components made of ABS plastics.

2. Automatic Solenoid Bleed Valve

a. Provide a solenoid bleed valve (sized for system), that is initiated by the conductivity control module. Valve shall be rated for 120V.

3. Water Meters

a. Provide (1) electric contacting water meter (sized for system) for make up, similar to Carlon, Badger or equal. Meter shall be flanged connection, bronzed bodied turbine type.

1) Meter shall be of a type approved by the local water authority.

b. Provide (1) water meter (sized for system) for bleed, similar to Carlon, Badger or equal. Meter shall be flanged connection, bronzed bodied turbine type.

1) Meter shall be of a type approved by the local water authority.

4. Chemical Feed Pumps

a. Provide (3) chemical feed pumps for inhibitor feed and biocide feed ([2] pumps for biocide, [1] for inhibitor).

b. Pumps shall be diaphragm type having adjustable stroke length and frequency controls. Liquid handling trim shall be polypropylene with Teflon seals and diaphragm. Output shall be at least 30 gallons/day, rated 100 psi at 120 volts. Pumps shall be installed including all wiring and a shelf assembly mounted integrally with the control panel.

c. Discharge shall be separately connected to header, as shown on the drawings.

d. Pumps shall be manufactured by LMI, Pulsatron or approved equal.

5. Corrosion Coupon Test Rack

a. The Contractor shall provide ASTM corrosion coupon test racks in accordance with the chemical treatment service organization requirements. Test coupons shall be mild steel and copper and shall be provided by the Water Treatment Contractor and removed every (90) days for laboratory evaluation. A report of corrosion rates shall be submitted to the Owner with subsequent recommendations for corrective action to obtain corrosion rates of less than 5 mpy for mild steel and 1 mpy for copper.

b. Constructed of schedule 40; 316 stainless steel.

B. Chemicals

1. Provide an organic sequestrant, polymer scale and corrosion inhibitor as determined by make-up water and system conditions. Maintain control limits of product as specified by manufacturer and pH of not less than 7.5.

2. Provide (2) EPA registered non-oxidizing brocades for algae, slime and bacteria control.

3. Provide pH correction chemical (if necessary) as determined by water analysis.

2.5 PROPYLENE GLYCOL SYSTEMS

A. Provide complete initial fill of 30% propylene glycol/70% water for all glycol systems. Propylene glycol solution shall be Dowfrost as manufactured by Dow Chemical Co. or

Union Carbide UCAR-17. Top off, test and adjust system solution after all piping systems have been tested and received. Refer to details on the drawings for automatic glycol fill system schematic.

B. Tank shall be 50 gallon H.D., self-supporting natural polyethylene having vertical embossed graduations, stainless steel cover divided at midpoint with full diameter stainless steel piano hinge and drilled for pump mounting, suction line, fresh water fill, agitator and liquid level monitor. Tank shall be CCS, CB50 or equal.

C. Chemical injection pump shall be 110 volt, minimum 1/3 HP drive, 3/8" positive displacement, to be used for charging of glycol and future additional inhibitor. Pump is to have a bronze housing with stainless or bronze liquid drivers and internal, discharge pressure gauge, and adjustable internal relief valve set so as not to exceed normal system operating pressures. Output is to be at least 5.0 gallons per minute at 100 psi. The pump discharge line is to be fitted with a ball or swing check valve to prevent system backflow (zero flow leakage) when valves are open to main headers. Unless otherwise specified, pump operation shall be initiated by a switch controlled 110 volt circuit. Pumps shall be CCS P283A series. Provide an electric transfer pump system to transfer concentrated propylene glycol to the moving tank. Provide a pre-pressurized diaphragm tank, pressure tank at least 15 gallons in size to maintain pressure on the main fluid system.

D. Accessory Switch: Provide adjustable pressure switch to prevent operation of glycol chemical pump above system PRV settings, as manufactured by Mercoid DA-31, United or approved equal.

PART 3 - EXECUTION

3.1 EQUIPMENT START-UP, FOLLOW-UP AND TRAINING

A. The Water Treatment Contractor shall provide:

1. Recommendations in writing for all chemical types to be used in each system depending on local water quality and suitability. Chemicals shall be listed in generic terms.

2. Recommendation in writing on procedures, logs book entry and correct chemical applications.

3. Complete training of maintenance and operating personnel.

4. Start-up consisting of at least (3) days with weekly visits for the first month of operation.

5. After start-up, monthly visits at least every (30) days for a period of (1) year to analyze all water systems. Each analysis to be submitted in writing containing all results and recommendations to the Owner for corrective action.

6. A microbiological dip slide culture kit shall be provided and testing, including incubation, shall be performed.

7. Monthly Service

   a. Provide weekly service checks during initial start-up month and bi-weekly service during the 2nd month.

   b. Run control tests and submit a written service report covering all aspects of chemical treatment.

   c. Recommended changes in chemical feed rate or blowdown/bleed schedule as indicated by control tests.

3.2 OTHER SERVICE

A. Provide in-service training of operating Engineers on product testing and chemical performance.

   1. Operator Training: Train operating personnel in use, operation, and maintenance of all water treatment systems.

   2. A program administration manual shall be furnished encompassing all systems covered in this Section.

   3. Three days of training for operating personnel shall be priced including all expenses. Document in bid tabulation form.

B. Provide all laboratory reports on corrosion or deposit analysis as needed.

C. Make available all test kits and testing reagents to assure accurate test results.

D. Provide all log books for all equipment rooms so test results may be recorded. Log Books should contain:

   1. Product technical data sheets
   2. Product Material Safety Data Sheets
   3. Equipment Literature
   4. Program Operating & Testing Parameters
   5. Chemical Testing and Blowdown/Bleed Log Sheets

E. System Testing and Follow Up

   1. Chemical treatment representative shall visit the site once every month during the guarantee period. The representative shall check and adjust water treatment system operation during each visit, check efficiency of chemicals and chemical applications, and instruct and advise operating personnel.

2. At each inspection during the guarantee period, samples of the water systems shall be taken by the chemical treatment representative. The samples shall be analyzed by an independent testing laboratory and certified. The analysis made on the water shall be submitted to owner. The analysis report shall include recommendations as to any changes in the water treatment required.

F. Provide any and all necessary safety and government approval literature on recommended products to assure compliance with federal, state and local regulations.

3.3 INSTALLATION

A. Install chemical feeders per manufacturer's instructions. Chemical treatment equipment manufacturer shall supervise installation to ensure proper installation.

B. Install chemical feeders and equipment per manufactures recommendations.

C. Provide 316 stainless steel drip pan under chemical tanks and pumps. Pan shall be a minimum of 10 gauge.

D. Provide relief valve in the discharge of each pump.

E. Provide hose end drain valves at low points in piping.

3.4 PIPING SYSTEMS PREPARATION

A. General: After piping systems are erected and proven free of leaks provide services for piping systems flushing, cleaning, disinfecting, purging, rinsing and treating in accordance with specification.

3.5 CLEANING

A. Each new water system shall have an industrial strength cleaner added and circulated for a minimum of 24 hours when the system is initially filled with water. Cleaner shall be equal to Barclay Flushout.

B. After a complete flushing, each system shall be chemically treated with an inhibitor. The Water Treatment Contractor shall provide the proper amount of cleaner and inhibitor for each system, supervise the cleaning procedure and issue a written report to the Owner and Architect that each system has been properly cleaned, chemically treated and tested. The Mechanical Contractor shall perform the cleaning and flushing procedure under the supervision of the Water Treatment Contractor. The result of the initial tests shall be included in the report. All test apparatus, equipment and labor shall be provided by the Mechanical Contractor under this Section. Tests and cleaning will be witnessed by the Architect and Owner's representatives. Notify all parties 48 hours in advance of commencement of work.

END OF SECTION

SECTION 23 3100 – SHEET METAL WORK AND ACCESSORIES

PART 1 - GENERAL

1.1 RELATED DOCUMENTS

A. Drawings and general provisions of the Contract, including General and Supplementary Conditions, Section 230500 and other Division 1 Specification Sections, apply to this Section.

B. LEED Building General Requirements: The Owner requires the Contractor to implement practices and procedures to meet the project's environmental performance goals, which include achieving LEED Certification. Specific project goals that may impact this area of work include: Use of recycled-content materials; use of locally-manufactured materials; use of low-emitting materials; construction waste recycling; and the implementation of a construction indoor air quality management plan. The Contractor shall ensure that the requirements related to these goals, as defined in the sections below, are implemented to the fullest extent. Substitutions, or other changes to the work proposed by the Contractor or their Subcontractors, shall not be allowed if such changes compromise the stated LEED Building Performance Criteria.

1. Comply with LEED (Leadership in Energy and Environmental Design) Green Building Rating System BD+C, Version 3.

1.2 WORK INCLUDED

A. Furnish and install a complete system of air distribution, including accessories, to all areas indicated on the contract documents.

B. Create, coordinate and submit 1/4" scale Coordination Drawing in accordance with Section 230500 and 230510 3D Building Information Modeling.

C. Provide all ductwork, fittings and accessories to make a complete and operational system in all respects.

1.3 RELATED SECTIONS

A. Examine all drawings and criteria sheets and all other Sections of the Specifications for requirements which affect work under this Section whether or not such work is specifically mentioned in this Section.

B. Section 017419 "Construction Waste Management and Disposal" for requirements related to construction waste management and disposal at the project site.

C. Section 018113 "VOC Limits for Adhesives, Sealants, Paints and Coatings" for restrictions of VOC in adhesives, sealants, paints and coatings.

D. Section 018119 “Construction Indoor Air Quality (IAQ) Management” for requirements during construction for indoor-air-quality management.

1.4 REFERENCES

A. Applicable provisions of the following Codes and Trade Standard Publications shall apply to the work of this Section, and are hereby incorporated into, and made a part of the Contract Documents.

B. Material standards shall be as specified or detailed hereinafter and as follows:

1. ASTM A 36/A 36M – Standard Specification for Carbon Structural Steel.

2. ASTM A 1008/A 1008M – Standard Specification for Steel, Sheet, Carbon, Cold Rolled, Commercial Quality.

3. ASTM A 1011/A 1011M – Standard Specification for Steel, Carbon (0.15 Maximum, Percent), Hot-Rolled Sheet and Strip, Commercial Quality.

4. ASTM A 653/A 653M – Standard Specification for Steel Sheets, Zinc-Coated (Galvanized) or Zinc-Iron Alloy-Coated (Galvannealed) by the Hot Dip Process.

5. ASTM A 666 – Standard Specification for Austenitic Stainless Steel Sheet, Strip, Plate, and Flat Bar.

6. ASTM B 209 – Standard Specification for Aluminum and Aluminum-Alloy Sheet and Plate.

7. ASTM B 209M – Standard Specification for Aluminum and Aluminum-Alloy Sheet and Plate (Metric).

8. ASTM C 443 – Joints for Circular Concrete Sewer and Culvert Pipe, Using Rubber Gaskets.

9. ASTM C 443M – Standard Specification for Joints for Circular Concrete Sewer and Culvert Pipe, Using Rubber Gaskets (Metric).

10. NFPA 90A – Installation of Air Conditioning and Ventilating Systems.

11. NFPA 90B – Installation of Warm Air Heating and Air Conditioning Systems.

12. NFPA 96 – Installation of Equipment for the Removal of Smoke and Grease-laden Vapors from Commercial Cooking Equipment.

13. SMACNA (LEAK) – HVAC Air Duct Leakage Test Manual.

14. SMACNA (DCS) – HVAC Duct Construction Standards – Metal and Flexible.

15. UL 181 – Factory-Made Air Ducts and Connectors.

1.5 SUBMITTALS

A. See Section 230500 and General Conditions for additional requirements.

B. Product Data: Provide data for duct materials, duct connectors and all accessories. Include sound attenuator test data in accordance with ASTM E477.

C. The Sheet Metal Contractor shall submit duct fabrication standards and methods of installation, in compliance with SMACNA and these specifications, for review and approval by the Architect, clearly indicating the combination of metal gauges and reinforcement intended for use for each pressure classification. Duct fabrication shall not be allowed until a satisfactory review of this Standard has been performed and fabrication drawings have been reviewed and coordinated. MERELY SUBMITTING COPIES OF THE SMACNA PRESSURE CLASS TABLES DOES NOT COMPLY WITH THIS REQUIREMENT.

D. Provide scaled ductwork fabrication drawings. Fabrication drawings shall be double line and as a minimum include elevations, dimensions, sizes, all offsets rises and drops, air distribution devices.

E. Provide scaled ductwork coordination drawings for all floors and systems in accordance with Section 230500, Submittals.

F. Test Reports: Indicate pressure tests performed. Include date, section tested, test pressure, and leakage rate, following SMACNA – HVAC Air Duct Leakage Test Manual.

G. Manufacturer's Installation Instructions: Indicate special procedures for glass fiber ducts.

H. Manufacturer's Certificate: Certify that installation of glass fiber ductwork meet or exceed recommended fabrication and installation requirements.

I. Project Record Documents: Record actual locations of ducts, duct fittings and all accessories. Record changes in fitting location and type. Show additional fittings used.

1.6 QUALITY ASSURANCE

A. All ducts and fittings shall be manufactured by a sheet metal fabrication company whose primary business experience is the manufacture of commercial and industrial quality ducts and fittings. Sheet Metal Contractor shall have adequate experience of building ductwork of the types required for this project as well as successful experience with projects of similar scope. Bids from sheet metal shops which do not meet the specified requirements shall not be acceptable.

B. **No Ductmate, Ward, Nixon or similar factory made slip-on connections will be permitted.**

1.7 ENVIRONMENTAL REQUIREMENTS

A. Do not install duct sealants when temperature is less than those recommended by sealant manufacturers.

B. Maintain temperatures within acceptable range during and after installation of duct sealants.

C. Confirm duct sealant materials meet LEED requirements.

PART 2 - PRODUCTS

2.1 SHEET METAL WORK

A. General

1. Acceptable Manufacturers (Provided they are in compliance with these specifications)

a. Sheet Metal

1) All ducts and fittings shall be manufactured by a sheet metal fabrication company whose primary business experience is the manufacture of commercial and industrial quality ducts and fittings. Sheet Metal Contractor shall have adequate experience of building ductwork of the types required for this project as well as successful experience with projects of similar scope. Bids from sheet metal shops which do not meet the specified requirements shall not be acceptable.

2) All branch duct connections shall be made by clinch lock using clinch collars.

b. Sheet Metal Accessories

1) Access Doors

a) Ruskin
b) Air Balance
c) Hart and Cooly
d) Ductmate
e) Elgen

2) Flexible Connectors

a) Ventlock
b) Elgen Manufacturing
c) Duro Dyne

d) Ventglass
e) Elgen

3) Flexible Ductwork

a) Clevepak Corp.
b) Flexible Technologies
c) Unaflex Rubber Corp.
d) Flexmaster

4) Fire Dampers

a) Ruskin
b) Prefco
c) Air Balance
d) Greenheck Fan Corp.
e) Nailor Industries
f) NCA Manufacturing Inc.

5) Fire/Smoke Dampers

a) Ruskin
b) Prefco
c) Air Balance
d) Greenheck Fan Corp.
e) Nailor Industries

6) Smoke Dampers

a) Ruskin
b) Prefco
c) Air Balance
d) Greenheck Fan Corp.
e) Nailor Industries

7) Automatic Dampers Airfoil

a) Ruskin
b) Greenheck Fan Corp.
c) Nailor Industries
d) T.A. Morrison & Co. Inc. (TAMCO)
e) Air Balance
f) NCA Manufacturing Inc.

8) Balancing Dampers (OBD)

a) Ruskin
b) Young Regulator
c) Prefco

d) Greenheck Fan Corp.
e) Air Balance
f) Nailor Industries
g) NCA Manufacturing Inc.

9) Small Balancing Damper less than 48x12

a) Ruskin
b) Young Regulator
c) Ventlock
d) Duro Dyne

2. Unless otherwise noted, all supply, return and exhaust air ductwork of all types shall be constructed of galvanized sheet metal based on the "Pressure Class" indicated in the "Minimum SMACNA Construction Standards" table found hereinafter.

3. The drawings are diagrammatic and indicate the arrangements of the principal apparatus, ductwork and piping and shall be followed as closely as possible. Because of the scale of the drawings, it is not possible to show all offsets, rises, drops, rises, fittings, accessories, etc. The Contractor shall carefully investigate the structure, finish conditions, and the work of other trades affecting the work and arrange ductwork, piping, equipment, accessories, etc. accordingly. Provide the best possible arrangement so as to provide the maximum headroom and access to apparatus while providing the minimum resistance to airflow. This work and any extra fittings and offsets required shall be included in the project without extra charge.

4. In addition to sheet metal ductwork provided under this Contract furnish and/or install accessories and devices furnished by others, including but not limited to smoke detectors. Provide and install miscellaneous sheet metal work including safing, mixing baffles, and blank off panels at unused louver areas.

5. All duct systems specified to be installed under this Contract, shall conform to the drawings, specifications, Standards, details and recommendations of the latest edition of SMACNA "HVAC Duct Construction Standards - Metal and Flexible"; and "Round and Industrial Duct Construction Standards" (hereinafter referred to as Duct Manual). Where the building code references a specific edition of SMACNA "HVAC Duct Construction Standards - Metal and Flexible", then that edition shall be followed. Where the requirements under this Section exceed the requirements of the Duct Manual and/or SMACNA Interpretations of the Duct Manual, the specification shall govern. Wherever the word "should" appears, replace with the word "shall".

6. The Sheet Metal Contractor shall submit duct fabrication standards and methods of installation, in compliance with SMACNA and these specifications, for review and approval by the Architect, clearly indicating the combination of metal gauges and reinforcement intended for use for each pressure classification. Duct fabrication shall not be allowed until a satisfactory review of this Standard

has been performed. MERELY SUBMITTING COPIES OF THE SMACNA PRESSURE CLASS TABLES DOES NOT COMPLY WITH THIS REQUIREMENT.

7. All galvanized steel sheet metal shall conform to ASTM A653/A653M (G-90) having not less than 1.25 oz. of zinc on each side of each square foot of sheet. All other duct materials shall be as hereinafter specified as applicable to this Contract.

8. The Sheet Metal Contractor shall install all duct mounted smoke detectors and provide proper cross trade layout coordination to allow for appropriate service/access requirements.

9. The Sheet Metal Contractor shall furnish and install all plenums with automatic or manual dampers attached to louvers.

10. The Sheet Metal Contractor shall provide enclosures for all structural columns/cross bracing/steel beams penetrating or contained within plenums.

    a. This sheet metal enclosure shall match plenum construction for:

        1) Pressure class.
        2) Leakage class.
        3) Material.

11. The Sheet Metal Contractor shall fabricate and install all Generator intake and relief plenums to be single wall construction. Generator Intake and relief Plenums shall be insulated on the outside of the plenum of the plenum with 2” Rigid Fibergalss Board insulation with FSKL facing as specified in section 230713.

12. The Sheet Metal Contractor shall fabricate and install all canopy hoods, flexible "elephant trunk" exhaust outlets as detailed or noted in the Construction Documents.

13. The Sheet Metal Contractor shall furnish and install exhaust ductwork from emergency generator outlet to exhaust louver including transitions, drains, access doors, flexible connections and baffles to isolate intake from exhaust.

14. There will be <u>no</u> supply and/or return air system ductwork internally lined unless otherwise noted.

15. The Sheet Metal Contractor shall clean and provide temporary caps on all ductwork during installation to prevent dust, dirt and debris from entering ducts during construction, including during shipping, handling and storage in the field.

16. All shop applied fabrication labels shall be applied to the exterior of the ducts. The Sheet Metal Contractor shall remove any material applied to the inside of the ducts before installation.

17. All inline fans shall have companion flanges intake and discharge for removal for servicing.

18. Seal all joints to VAV/VCV/SAV/EV in the field, including reheat coils and sound attenuators.

2.2 DUCT CONSTRUCTION

A. Duct Construction Schedule

Minimum SMACNA Construction Standards						
Ductwork Location	**Pressure Class Inches W.G.**	**Seal Class**	**Leakage Class**	**Material**	**Sound Lining**	**Table Notes**
Supply from Air Handling units to terminal boxes	±6	A	4	G-90	No	
Supply from terminal boxes to outlets	±2	A	4	G-90	No	
Return from Air Handling units to terminal boxes	-6	A	4	G-90	No	
Return from outlets to terminal boxes	-2	A	4	G-90	No	2
Exhaust from Exhaust Air Handling units to terminal boxes	-6	A	4	G-90	No	
Exhaust from outlets to terminal boxes	-2	A	4	G-90	No	2
Exhaust Stacks located on the exterior of the building	-6	A Welded	0.5	316L S.S.	No	
Shower exhaust, MRI room emergency exhaust	-3	A	4	Aluminum	No	
Autoclave exhaust	-4	A	1.5	316L S/S	No	3, 4
Glass washer, Cartwasher, Dishwasher, Sterilizer	-3	A Welded	4	316L S/S	No	3, 4
Toilet exhaust	-3	A	4	G-90	No	2
General exhaust	-3	A	4	G-90	No	2
Hood exhaust/bench slots	-6	A Welded	0.5	316L S.S.	No	
Stair/Elevator pressurization	+3	A	4	G-90	No	2
Other	±3	A	4	G-90	No	2

Table Notes

Table Notes
2 Ductwork in the following locations shall be constructed of aluminum or stainless steel and continuously welded (Joints & Seams) and pitched back to the outlets. · Within 20'-0" of a shower area exhaust. · Within 20'-0" downstream and 5'-0" upstream of a duct humidifier. · Within 20'-0" of a sterilizer area exhaust. · Within 20'-0" of a cartwasher exhaust. · Within 20'-0" of a locker room and within room (exhaust).
3 Pitch horizontal duct back to hood equipment where exhaust originates. 4 Sound lining shall not be provided at exhaust fans serving wet exhausts, isolation exhaust, radioactive exhaust, kitchen hood exhaust, ETO exhaust or biohazard exhaust.

2.3 ADDITIONAL CONSTRUCTION REQUIREMENTS

A. Minimum Requirements

1. The minimum gauge for any steel duct shall be 24 gauge except when specified heavier.

2. The minimum gauge for black steel kitchen exhaust ductwork shall be 16 gauge.

3. The minimum gauge for stainless steel kitchen exhaust ductwork shall be 18 gauge.

4. The minimum thickness of any aluminum duct shall be 0.040".

5. The minimum diameter of any tie rod shall be 1/2".

6. The maximum tie rod spacing shall be 42" unless specifically engineered in accordance with the SMACNA Industrial Rectangular Duct Standard.

7. When tie rods intersect, they shall be welded to each other.

8. No ductwork shall be constructed to less than ±2" w.g. This means nothing is constructed to a standard between –2” w.g. and +2” w.g.

9. **Duct dimensions indicated are clear inside dimensions. The sheet metal dimensions shall be increased to accommodate internal liner where liner is required.**

B. All joints and seams in all ductwork and casings shall be sealed to SMACNA Seal Class “A”. In finished areas, sealing compound shall be neatly applied to exposed ductwork and bands shall be provided over, to cover the sealant.

1. Some SMACNA constructions may not be suitable for the leakage classes specified even though they may meet the pressure class and should not be used.

2. Seal class A Welded means all welded (i.e. transverse joints, longitudinal seams, spiral seams, fire dampers, volume dampers or any accessories) and in addition it means continuously welded.

3. All sealants, adhesives and coatings shall be of approved kinds and qualities for each point of application, complying with recommendations for the use and storage.

4. The method of installation and materials for sealing the ductwork shall be submitted by the Sheet Metal Contractor for review and approval by the Architect, as part of the ductwork construction standards and installation submittal.

5. All screw holes in duct shall be sealed to include, but not limited to, joints, seams, connections, strap hangers, hangers, etc.

C. All longitudinal seams in all ductwork in excess of +2" w.g. or less then -2" w.g pressure class shall be made with formed Pittsburgh locks.

D. Grooved seam/flat lock/pipe lock joining methods is restricted to 2" W.G. pressure class only.

E. Button punch-snap lock seams are not to be used.

F. Concealed stainless steel ductwork shall have an ASTM mill rolled No. 1 or No. 2 D finish. Exposed stainless steel ductwork shall have an ASTM mill rolled No. 2 B finish, or higher grade as required by the Architect, with all welds ground smooth and final brushed with stainless steel wire brushes. All welds on exposed stainless steel ductwork shall be free of stain, burn-through, or discoloration to the satisfaction of the Architect.

G. Tie rods shall not be used in any plenum or large duct requiring internal access or use as an access pathway.

H. All ductwork required to be removable shall be companion flanged SMACNA Type T-22 for ductwork constructed to SMACNA Metal Duct Standard and companion flanged in accordance with Industrial Standards for ductwork required to be constructed to Industrial Standards.

I. Elbows

1. All dust collection ductwork elbows shall be a centerline radius equal to (2) duct widths or diameters. No reduction shall be allowed.

2. Radius elbows shall be used wherever possible. Where it is impossible or impractical to install a 1.5 times width to centerline radius of elbow (full radius elbow) lesser radii configurations shall be used, each with "radius-proportional" splitter vanes permanently installed within. No radius shall be less than 1.0 times the width. Provide square elbows in rectangular ducts with double thickness

vanes with a minimum radius of 4 1/2". Square elbows may only be used when radius elbows will not fit and where specifically approved by the Architect prior to fabrication and/or as required by coordination shop drawings. All offsets shall be of the radium type.

J. Auxiliary Drain Pans

1. Provide 1-1/2" deep auxiliary drain pans under any units with cooling coils located above hung ceilings.
2. Pans shall be 6" larger then equipment in all directions.
3. This includes but not limited to all fan coil units.
4. Drains shall be piped to floor drains or utility sinks.

K. Each duct mounted humidifier shall:

1. Be provided with a stainless steel drain pan

a. The minimum drain pan size when there are no obstructions shall be from 6 inches before leading face of the coil to a distance down stream from the leaving face to 6inches beyond the humidifier manufactures absorption distance.

1) Obstructions:

a) Coils.
b) Turning vanes.
c) Air cleaners.
d) Duct offsets greater then 15°.
e) Tie rods.
f) Anything in the air stream.

b. If obstructions are coils, eliminators, or evaporative media they may be located within the drain pan provided the drain pan extends to there drain pan requirements.

2. Drain pan slope:

a. Pan shall slope at a minimum of 1/8 in. per foot from the horizontal towards the drain outlet.

b. Drain pan outlet shall be at the lowest point or points of the pan with sufficient size to prevent overflow under any normal expected operating condition.

c. Provide a seal trap in accordance with the contract detail and verify the trap will fit.

d. Sheet Metal Contractor shall test all drain pans provided by the Sheet Metal Contractor to ensure pans are sloped towards the drain outlet. Sheet

Metal Contractor shall challenge the performance of the drain pan by pouring water around the perimeter of the entire drain pan to ensure all water flows to the drain pan outlet and no puddles of water are present in the drain pan after testing is complete. This testing shall be mandatory for all drain pans fabricated and/or provided by the Sheet Metal Contractor.

L. Ducts Exposed to Weather

1. For all ducts exposed to weather, after all ducts and joints are sealed and tested as specified herein, apply all over and around the same areas of possible leakage (joints), an approved sealer system, so that ductwork outside the building shall be installed in a manner to result in less then 0.5 leakage class.

2. Exposed ductwork shall be insulated and weather-protected by the Insulation Contractor after the installation is completed and tested.

M. Provide baffles and/or diffusion plates as required in all air handling units, to ensure proper air mixing, coil velocities and air distribution across filters or coils as determined in the field by the Architect, at no additional cost to the Owner.

N. It is the intent of this specification to provide a duct system with minimum resistance to airflow. All take-offs shall be throated and transitions made as gradually as possible. "Bullhead" or sharp take-offs shall not be acceptable.

O. In addition to SMACNA requirements, ductwork in return systems without boxes, ductwork in supply systems without boxes, ductwork in exhaust systems without boxes, ductwork in any Constant Volume System and/or ductwork downstream of VAV, supply, return or exhaust boxes or valves shall be provided with:

1. Volume dampers in all branch takeoffs and in all main branches and ducts of all ductwork systems (supply, return and exhaust) for properly regulating and balancing airflow to all terminal outlets, for all duct sizes, whether shown on the drawings or not. **The above requirement is mandatory.**

a. Dampers and operators shall be similar to as manufactured by Young Regulator.

b. Provide manual adjustable rectangular opposed blade dampers with factory installed locking hand quadrants extended 2" for all dampers installed in externally insulated duct.

c. Dampers shall be manufactured approximately 5/16" smaller in width and 1/8" smaller in height than size of duct in which they are installed; e.g., nominal damper size is 24" x 10", actual size is approximately 23-11/16" x 9-7/8".

d. Damper frame shall be constructed of #6063 extruded aluminum reinforced channel with minimum thickness of .050". Opposed damper blades shall be #6063 extruded aluminum with minimum thickness of .50"

and shall include reinforcing ribs. Each blade shall be supported in the damper frame by individual Teflon axle bearings, and shall be driven by stainless steel connecting slide linkage controlled by 3/8" square steel control shaft. When installed in stainless steel duct systems, the dampers shall be constructed of all stainless steel components.

e. All manual volume dampers handles shall be flagged with brightly colored ribbon tape, extending a minimum of 6” down from the handle, to enhance visibility. Ribbons shall not be installed in areas without ceilings.

2. Volume dampers shall be provided upstream for all Air Terminal Boxes and Exhaust/Supply venture valves where excessive system pressure is greater than exceeds the range of the equipment and/or associated controls operating limits.

3. Provided with a means for remote adjustment

a. All balancing dampers that are:

1) Inaccessible for adjustment, including those isolated by mechanical obstructions (e.g. piping, conduit, cable trays, other ductwork, etc.).
2) Above drywall ceilings
3) Above plaster ceilings
4) Where specified
5) Where noted on the drawings.

4. Remote operators.

a. Cable remote Operators shall be installed within the neck of the air device for access through the removable core of the air device.

1) Provide Young Regulator Bowden Cable Control kit for remote, internally mounted, worm gear operator volume dampers.

a) Provide stainless steel cable and control wire.

b) Acceptable manufacturers subject to compliance with the specifications.

(1) Young Regulator.

b. Wireless remote balancing damper

1) The adjustment mechanism hardware and installation shall in all cases conform to the project governing building codes.

2) The contractor shall provide air balancing dampers in primary and branch zones and serving individual air devices as indicated and/or specified in the contract documents.

a) Balancing dampers shall be located upstream from air outlets a *minimum* of six feet.

(1) In no instance shall any damper be installed:

(a) At supply diffuser necks
(b) At linear diffuser plenum inlets.

b) Ceiling access doors for balancing damper access shall not be allowed at any location without prior written approval of the architect.

c) All balancing dampers that are inaccessible for adjustment, including those isolated by mechanical obstructions (e.g. piping, conduit, cable trays, other ductwork, etc.) shall be provided with a means for remote adjustment.

d) The damper–controller shall have a built–in test mechanism that, prior to installing the ceilings that will quickly and positively verify:

(1) That the installed dampers work correctly.
(2) With a clear visual indication at the controller.

e) The Contractor shall indicate as–built duct drawings:

(1) The final location of all inaccessible air balancing dampers
(2) All remote connector locations.

f) The remote damper adjustment mechanism shall be the wireless controlled.

g) Total enclosure of components and cables

h) All above–ceiling components shall be plenum–rated with a minimum UL94–5VA classification.

(1) Power/signal cables to the actuators shall be easily extendable in “daisy chain” fashion in increments up to 150 feet.

i) When merging several actuators power/signal cables for control from a common location, remote panels shall be provided in the node capacity required, and with each tagged to its respective damper.

(1) Equal to the Zipset “RP Series”

(2) When panels are located in public view, the look and finishes shall be approved by the Architect.

j) Acceptable manufacturers subject to compliance with the specifications.

(1) The Zip Group LLC.

(a) Similar to Zipset “TE Series”

P. All rectangular dampers shall be opposed blade and each shall be controlled by an approved galvanized locking quadrant indicating the damper position, as detailed on the drawings.

1. Volume dampers installed into ductwork that is specified to be externally insulated shall have extended activator/handle rods with extension bracket such that adjustment of the damper handle will not disturb the insulation.

Q. Submit the sheet metal shop drawings to the Balancing Contractor of the project for his review and placement of dampers with the final balancing procedures and requirements in mind.

1. Coordinate the location and areas with the Balancing Contractor, and fabricate the ductwork system accordingly.

2. Provide any and all balancing dampers required by the balancing contractor at no additional cost.

R. In addition to SMACNA requirements, all round ductwork, if used in lieu of rectangular supply and/or return/exhaust systems shall conform to SMACNA.

1. The use of flat oval ductwork shall not be acceptable.

2. Round duct shall be manufactured of spiral lock seam. Ductwork up to 12"ø and 2" w.g. pressure class can be manufactured with longitudinal lock seams. All fittings seams shall be continuously welded.

3. All tees shall be conical.

4. All laterals shall be straight.

5. All taps through 10" diameter in size shall have a machine drawn entrance and all fittings shall have longitudinal seams, continuous-welded. Both sides of all welds shall be primed with zinc chromate.

6. All tap entrances shall be free of weld build-up.

7. Elbows in diameters 3" through 10" shall be 2-section stamped or pleated elbows. Larger elbows shall be gored construction. Elbows shall be fabricated to

a centerline radius of 1.5 times the diameter. All fittings seams (including gore) shall be continuously welded. All gored longitudinal seams shall be staggered. All gored elbows shall be fabricated according to the following schedule:

Elbows	# of Gores
Up to 35°	2
36° to 71°	3
Over 71°	5

8. All field joints in diameters through 48" shall be made with a 2" long slip-fit or sleeve coupling provided assembly is not hindered. Ductwork over 48", and for all sizes where disassembly and removal is required, shall be joined with Vanstone or shop fabricated flanges.

9. All flanges and taps into spiral ducts shall be factory or shop fabricated and installed as hereinbefore specified. Shipment of loose flanges or taps for field installation shall be avoided.

10. All access doors for round duct shall be furnished by the access door manufacturer. Round duct access doors shall be of low leakage sandwich type suitable for systems up to 8” pressure, positive or negative. Round duct access doors shall be insulated and shall be equivalent to Ruskin model ARDD.

11. Unless specifically noted otherwise or required by special constraints, all elbows on ductwork changing direction from vertical to horizontal shall be 1.5 times radius.

2.4 SPECIAL EXHAUST SYSTEMS

A. Canopy hoods shall be fabricated of 18 gauge welded 304 stainless steel with No. 2B finish. Canopy hoods shall have all welds ground and polished with stainless steel wire brushes. Welds shall be free of stains, burns or discoloration. Transition to the duct connection shall be a maximum angle of 45°. Duct work shall extend down to mounting height of hood.

2.5 SHOP APPLIED DUCT LINER

A. Interior supply and return ducts and plenums (other than outside air plenums), as hereinbefore specified to have internal duct insulation shall be lined with 1" thick fiberglass duct liner equal to Manville Permacote Linacoustic R300.

B. Liner shall meet the requirements of UL 181, ASTM C665 Bacteriological Standards, UL 723 Flamespread and NFPA 90A for flamespread and smoke developed ratings as borne out by tests and ratings of UL. Liner shall have an NRC no less than 0.80, based on Type A mounting as tested in accordance with ASTM C423-90 "k" factor not to exceed 0.25 (1") at 75°F mean temperature in accordance with ASTM C-518.

C. Maximum air friction in straight 24" diameter duct conveying 6200 cfm airflow at 2000 fpm velocity shall be 0.36" per 100'-0"

D. No erosion of insulation material shall occur below 5000 fpm duct velocity. Rigid board liner shall be constructed of strong glass fibers bonded with thermosetting resin.

E. All surfaces shall be protected with an acrylic coating.

F. Liner shall be applied with 100% coverage of approved fire resistant adhesive. Ducts over 20" in size in any direction shall be secured with mechanical fasteners ("stick-clips") on 12" centers and within 3" of ends.

G. Leading and exposed edges of liner joints shall be coated with fire resistant adhesive. Permacote-coated surface shall face the airstream.

H. The ductwork system shall be lined/sealed and installed in a manner to allow for low temperature air operation.

I. Care shall be exercised to ensure that no gaps or bare sheet metal exist, which might create condensation.

J. Acoustical liner installed in medium pressure ductwork and wherever lining starts abruptly from unlined ductwork shall be "nosed" with sheet metal flanging at all joints in accordance with SMACNA liner nosing details.

K. Liner shall be coated with a surface coating that does not support the growth of fungus or bacteria as determined by tests in accordance with ASTM C1071 and ASTM G21 and G22. Liner shall be sound absorptive.

L. The smooth black surface of the liner shall face the airstream and top pieces shall support the side pieces.

M. Lining on double wall duct systems may be completely covered with a layer of perforated minimum 24 gauge sheet metal (3/16 sq.in. holes on 7/16" staggered centers). The perforated sheet metal inner liner shall be secured with rivets and washers at intermediary points maximum 12" on center on all spans greater than 12" in width or height. Sheet metal nosing shall be provided to cover all insulation exposed-to-airstream edges, by bending of the sheet metal liner. Other methods of nosing, if different than the one specified, shall be submitted for review by the Architect prior to installation.

2.6 ACCESS DOORS

A. Provide access doors and frames in all supply, exhaust and return ductwork as required, to permit access to:

1. Automatic dampers

2. In-box heating coils

3. Fire dampers

4. In-duct coils

5. All plenums

6. In-duct humidifiers

    a. Provide sight doors

7. Other similar equipment

8. Fan Bearings enclosed in ducts.

9. Duct smoke Detectors

    a. Provide sight doors

10. For cleaning and inspection purposes

11. Where indicated on the drawings

B. Door Size

1. Ductwork

    a. Minimum 16” x 12”

    b. In ducts smaller then 12” they shall be 10” x 6” less then duct width except:

        1) Terminal Box heating coil door may be 10” x 6”

    c. Vacuum cleaning access door shall be 12” round.

2. Plenums

    a. Shall be 20” x 56”

        1) 18” x 45” door may be used only when 20” x 56” will not fit.

    b. Larger door shall be provided if required for equipment removal. Coordinate with equipment.

C. Door Construction

1. Doors shall match material type and gauge of the duct system in which they are installed. This includes hardware such as bolts.

2. Minimum gauge shall be 20.

3. Pressure tested to ±15” wc

a. Leakage shall be zero at ±10” wg

4. Provide a neoprene gasketed around their entire perimeter.

5. Where sight doors are required, a wire reinforced safety glass shall be utilized.

   a. All humidifiers

6. Insulated or lined ductwork shall have insulated door

7. Insulated plenums shall have insulated door

8. Insulated doors shall be double wall.

9. Insulation between the metal panels shall be of the same thickness as the duct or panel adjacent to the access doors.

10. Plenum access doors shall be hung on heavy hinges and shall be secured in the closed position by means of latches.

11. Ductwork access doors shall be clamp type with a retaining chain or cable.

12. Ductwork access doors shall be similar to Ductmate Sandwich access door.

13. All plenum hinge doors shall be submitted with test (provide E leakage) data before approval.

14. All fire damper access doors in all positive pressure supply ductwork of +3" w.g. or greater construction:

    a. Shall be of the pressure relief (negative pressure) spring loaded type. Design shall incorporate self-closing spring latch or be complete with secure retainer chain and "D" handle.

    b. These doors shall be mounted downstream (after shutoff) of fire dampers, fire/smoke dampers or smoke dampers or similar automatic shutting devices.

    c. These doors shall be of the automatic reset type and similar to Ruskin model ADHP-3.

15. Kitchen Exhaust

    a. Access/cleanout doors in kitchen exhaust ductwork shall be bolted, gasketed, smoke and grease tight. Access doors shall be provided at every floor per NFPA-96.

    b. Fabrication shall conform to NFPA 96; International Mechanical Code; and local code in all respects.

c. The door shall be hinged or chained to the ductwork.

2.7 FLEXIBLE CONNECTIONS (AHUS, EMERGENCY GENERATORS, FANS)

A. Provide flexible connections of 4" minimum fabric width

1. Between ductwork and the inlets and outlets of all fans **except**:

a. Hazardous exhausts
b. Lab exhaust fans located indoors.

2. Equipment equipped with fans

3. All ductwork that crosses building expansion joints

B. The connections shall be placed as close to the equipment as practical except at fan suction connections and the clear gap at rest shall be not less than 3". At fan suction connections, locate flexible duct connection at least 3 duct diameters away from fan inlet connection.

C. There shall be no tension of the fabric under static or dynamic loads

D. All fabric for flexible duct connections to equipment shall be a minimum of 22 oz. glass fabric, double coated with neoprene, fire retardant, waterproof, airtight, and approved by UL, similar to Ventfabrics or Ventglass.

E. Exterior flexible connection shall be insulated type similar to Duro Dyne.

F. Flexible connections shall be fabricated from approved flameproofed fabric conforming to NFPA 90A. Asbestos shall not be acceptable.

G. Flexible connections shall be installed further upstream from fan powered equipment (in the main duct size) to prevent obstruction of the fan inlet due to suction of the fabric into the airstream.

H. Ductwork shall be increased in size where the flexible connections are located to prevent fully drawn in connections from blocking any duct area. Submit detail for review.

2.8 BLANK OFF PANELS FOR UNUSED LOUVER AREAS

A. Provide minimum 20 gauge sheet metal blank off panels for all unused louver areas:

1. All louver areas not enjoined or connected to an active plenum.

B. Exterior/visible face of blank off panel shall be cleaned and painted flat black, prior to installation.

C. Panels shall be screwed to louver frames and caulked to provide a weathertight seal.

D. Provide insulation of blank off panels. See specification Section 230713 - Ductwork insulation.

2.9 DAMPERS

A. General

1. The minimum damper requirements shall be as indicated in the following table:

Damper Construction Table					
Type	**Approach Velocity (FPM)**	**Pressure Rating**	**UL555S Leakage Class**	**Blade Type**	**Listing**
Fire dampers in ducts greater than +2" w.g. or less than -2" w.g. (FD)	2,000	4”w.g.	N/A	OBD 3V	UL555 Dynamic
Other fire dampers (FD)	2,000	4"w.g.	N/A	Curtain or OBD	UL555 Dynamic
Fire smoke dampers in ducts greater than +2" w.g. or less than -2" w.g. and at all shafts (FSD)	3,000	4"w.g.	I	Air Foil	UL555, UL555S Dynamic
Other fire smoke dampers (FSD or HFD)	2,000	4"w.g.	I	OBD 3V	UL555, UL555S Dynamic
Smoke dampers (SD)	3,000	4"w.g.	I	Air Foil	UL555S Dynamic
Isolation dampers (at units)	4,500	8"w.g.	I	Air Foil	
Automatic dampers (AD)	4,500	6"w.g.	I	Air Foil	N/A
Balancing dampers in ducts wider than 48" and/or deeper than 12" (VD or as specified)	2,500	4"w.g.	N/A	OBD	N/A
Balancing damper in ducts less than 48" by 12" (VD or as specified)	2,500	2”	N/A	OBD	N/A
Smoke control damper (SCD)	3,000	4"		OBD	UL555S Dynamic

2. Dampers in stainless steel ducts shall be stainless steel.

3. Automatic dampers in aluminum duct shall be aluminum construction.

4. All curtain type fire damper assemblies shall be 100% face area type with the blade package and all frame components out of the air stream.

B. Automatic Dampers

1. See Automatic Temperature Control Specification.

C. Fire Dampers, Ceiling Radiation Dampers, Smoke Dampers, and Combination Smoke/Fire Dampers

1. Fire dampers, smoke dampers and combination smoke/fire dampers shall be provided as shown on the drawings and wherever Architectural drawings indicate fire and/or smoke rated partitions. Devices shall be of the appropriate service for the partition class into which they are installed. Exact requirements and type of partition shall be coordinated with the Architect.

2. All dampers shall meet the requirements of NFPA 90A and further shall be tested, rated and labeled in accordance with UL 555 (7th Edition), UL555S (4th Edition) and UL555C (3rd Edition).

   a. All dampers shall be field tested upon the completion of installation as required per NFPA 90 A, NFPA 80 and NFPA 105 (latest editions).

   b. All damper testing shall be documented as outlined per the above NFPA references and submitted to the Architect/Engineer for review prior to project closeout.

   c. All damper testing documentation shall be submitted as part of the project closeout for Owner record.

3. All dampers shall be tested, rated and labeled as "Dynamic Rated" for closure against airflow in the following configuration:

   a. Vertical mount (horizontal airflow):
      Ducted and unducted.

   b. Horizontal mount (airflow up):
      Ducted and unducted.

   c. Horizontal mount (airflow down):
      Ducted and unducted.

   Note: Static rated dampers shall not be allowed.

4. Each damper shall be rated to close against maximum design airflow at its installed location, with 400 fpm and .5 in wg. safety factors and against 4" w.g. maximum pressure across the closed damper.

5. All dampers shall include the required oversize enclosures which shall be sealed by the damper manufacturer for the appropriate duct pressure class into which they are installed. All such dampers shall have appropriate rectangular, flat oval or round duct collars to facilitate connection of mating ductwork. The Contractor shall be responsible for any additional sealing of duct collars and connections required to maintain the duct seal class requirements but shall not jeopardize the UL breakaway connection when utilized.

6. The Contractor shall indicate the location and rating of all dampers on his shop drawings and shall provide access doors at each location of sufficient size and type to permit access to the damper components. A detailed list of fire dampers,

smoke dampers and fire/smoke dampers shall be included as part of the shop drawing/submittal process for review. The list shall include damper size, damper type, location, material, rating, access door size, velocity, pressure drop, etc. The Contractor shall be solely responsible to coordinate all locations of duct access doors and dampers of all types. All duct access doors for all dampers shall be labeled in accordance with the herewith in NFPA references.

7. Contractor shall include damper manufacturer's installation instructions as part of the damper submittal. These instructions shall describe the applicable requirements for damper sleeve thickness; retaining angles; sealing; duct-to-sleeve connections; preparation of wall, floor or ceiling openings; and all other requirements to provide an installation equivalent to that tested by the damper manufacturer during the UL 555, UL555S and UL555C qualification procedures. Contractor shall detail any proposed installations that deviate from these manufacturer's instructions and explain the needed deviations. All fire, smoke and ceiling radiation damper installations shall comply with the manufacturer's installation instructions. Any submitted deviations must be acceptable to the appropriate authority having jurisdiction.

8. Fire Dampers

   a. Fire dampers shall be provided as shown on the drawings and wherever Architectural drawings indicate fire-rated partitions to the following schedule:

Partition Assembly Fire Rating	**Penetration Type**	**Damper Rating**
1 Hour	Ducted and Sprinklered	No damper; duct sleeved and packed only
1 Hour	Ducted and Non-Sprinklered	1.5 Hour
1 Hour	Open (Transfer)	1.5 Hour
1.5 to 2 Hours	Ducted or Open	1.5 Hour
3 Hour	Ducted *	3.0 Hour
4 Hour	Ducted *	3.0 Hour
*No open transfer will be permitted through these partitions.		

   b. Fire damper sleeves shall be manufactured with a metal sleeve of appropriate length and thickness for the required damper installation as shown in the table below:

Maximum Duct I.D.	Sleeve Gauge (U.S.)
Up to 84”	20 gauge
85” & Up	18 gauge

   c. Heat Release temperature rating for all fire dampers shall be 212°F or 50°F above the highest system temperature, whichever is greater.

d. Dampers in stainless steel ducts shall be stainless steel.

e. Dampers located in welded systems shall be rigidly connected with welded connections (not breakaway). Damper size and metal thickness must be confirmed per the manufacturer to coordinate with the rigid welded connection requirements.

f. Large fire dampers may require motor operator to comply with code if this is required. Mechanical Contractor shall provide power and connections from electrical panel.

9. Smoke Dampers and Combination Fire/Smoke Dampers

a. Smoke dampers and combination fire/smoke dampers shall be provided as shown on the drawings and wherever architectural drawings indicate smoke/fire rated partitions. Combination fire/smoke dampers shall be dynamically rated for 1.5 or 3 hours as determined by the Architect.

b. Smoke dampers and combination fire/smoke dampers and actuators shall meet the requirements of NFPA 92A and NFPA 92B and further shall be tested, rated and labeled as a "Leakage Rated Damper for Use in Smoke Control Systems" in accordance with the 4th edition of UL 555S. All smoke dampers shall be of low leakage design qualified to UL 555S Leakage Class I (8 cfm/sq.ft. at 4" w.g.) and shall have a UL 555S elevated temperature rating of 350°F.

1) Each smoke damper/actuator combination shall be UL 555S rated to operate at maximum design airflow at its installed location with 400 fpm and .5 in wg. safety factors.

2) Each smoke damper and combination assembly shall bare an AMCA certification.

c. Each smoke damper and combination fire/smoke damper shall be supplied with an appropriate damper actuator installed by the damper manufacturer at the time of damper fabrication. Combination fire/smoke dampers shall be manufactured with a metal sleeve of appropriate length and thickness for the required damper installation, and the damper actuator shall be installed on the sleeve exterior. Smoke dampers may be installed in ductwork up to 24” from wall with no openings between the wall and the smoke damper.

1) Damper actuators shall be electric type for 120 volt operation.

2) Power wiring, including interlocking to smoke detectors and fire alarm system, and panels to affect the sequence of operation shall be by the Electrical Contractor.

3) Dampers shall be fail closed as follows:

a) Power to Damper: Open
b) No Power to Damper: Closed

d. Damper frame shall be galvanized steel formed into a structural hat channel shape with reinforced corners. The smoke and combination fire/smoke damper blades shall be airfoil type with Class 1 leakage rating. Bearings shall be stainless steel sleeve turning in an extruded hole in the frame. Blade edge seals shall be silicone rubber designed to withstand 450ºF (232ºC) and jamb seals shall be stainless steel flexible metal compression type.

e. Each damper shall be equipped with a remote open or closed position indication switch. The switch shall be over the shaft type using two independent rotary cams and adjustable switch points indicating open and closed positions. Switch can be factory or field applied to manufacturer's damper.

1) These switches shall be furnished by the damper manufacturer and wired by the Electrical Contractor, in a location approved by the Architect.

2) Spare contacts for each damper shall be provided for additional remote (fire panel) operation.

f. Each combination fire/smoke damper shall also be equipped with a temperature limited re-openable feature equivalent to Greenheck model TOR providing the following operational sequence:

1) Temperature at damper heat release reaches 165°F or 50°F above highest system temperature, whichever is greatest, and primary heat sensing device closes damper. Remote or local override command panel can then re-open damper.

2) If temperature at damper heat release reaches 350°F, secondary heat sensing device will close the damper. Override and re-opening above this secondary temperature is not permitted. Both primary and secondary heat responsive devices shall incorporate a manual reset feature allowing restoration of normal operation after fire emergency has been cleared.

g. If utilizing system operation for smoke control purposes during the early phase of a fire emergency, each combination fire/smoke damper shall be equipped with a 212°F primary heat release and 350°F minimum rated damper actuator.

h. Dampers in stainless steel ducts shall be stainless steel.

i. Dampers located in welded systems shall be rigidly connected with welded connections (not breakaway). Damper size and metal thickness

must be confirmed per the manufacturer to coordinate with the rigid welded connection requirements.

10. Smoke Isolation Dampers at Air Handling Units

a. Provide smoke isolation dampers at air handling units as shown on drawings. Smoke isolation dampers shall comply with NFPA 90A, UL 555S and the aforementioned requirements with a minimum of (1) actuator for every 16 sq.ft. of damper or portion thereof. Pneumatically operated smoke isolation dampers shall be provided as follows:

1) Air to Damper: Open
2) No Air to Damper: Closed

b. The ATC Contractor shall provide all PE and EP switches, relays, etc., for ready wiring to the following schedule:

Device	Furnished By	Installed By	Actuator By	Actuator Type	End Switches	Control Air	Control Wires	Power	UL Assembly
Automatic Damper (AD)	Div 25	Div 23	Div 25	Pneumatic	Div 25	Div 25	N/A	Div 25	No
Automatic Damper (AD) (When noted to be electric)	Div 25	Div 23	Div 25	Electric	Div 25	N/A	Div 25	Div 25	No
Fire Smoke Damper (FSD)	Div 23	Div 23	Damper Manufacturer	Electric	Damper Manufacturer	N/A	ATC	Div 26	Yes
Smoke Damper (SD)	Div 23	Div 23	Damper Manufacturer	Electric	Damper Manufacturer	N/A	ATC	Div 26	Yes
Smoke Isolation Damper (SD)	Div 23	Div 23	Damper Manufacturer	Electric	Damper Manufacturer	N/A	ATC	Div 26	Yes
Fire Damper (FD)	Div 23	Div 23	If Req'd Damper Manufacturer	If Req'd Electric	If Req'd Damper Manufacturer	N/A	N/A	If Req'd Div 23	Yes

11. Smoke Control Dampers shall be the same as specified for smoke dampers.

12. All fire/smoke damper access doors in all positive pressure supply ductwork of +3" w.g. or greater construction:

a. Shall be of the pressure relief (negative pressure) spring loaded type. Design shall incorporate self-closing spring latch or be complete with secure retainer chain and "D" handle.

b. These doors shall be mounted downstream (after shutoff) of fire dampers, fire/smoke dampers or smoke dampers or similar automatic shutting devices.

PART 3 - EXECUTION

3.1 SHEET METAL INSTALLATION

A. All ductwork shall be installed to true alignment, generally parallel or perpendicular to adjacent building walls, floors and ceilings, so as to present a neat and workmanlike appearance. All fabricated, stored and installed ductwork shall be protected with removable caps, plastic or other means to prevent dirt, water and debris from entering duct system. The Sheet Metal Contractor shall be responsible for maintaining a clean duct system and shall clean and/or replace any ductwork identified by the Owner or Architect as being deficient or dirty. The Sheet Metal Contractor shall be responsible for all costs associated with the temporary protection cleaning and/or replacement of ductwork. All fabrication labels shall be applied to the exterior of the duct. The Sheet Metal Contractor shall be responsible for the removal of all internal labels if such labels were incorrectly applied.

B. Care shall be paid to the exact locations of all sheet metal work with respect to equipment, ducts, conduits, piping, slabs, beams, columns, ceiling suspension systems, lighting fixtures and electrical, plumbing and fire protection systems in the building. Close coordination and cooperation shall be exercised with other Trades in locating the piping and equipment in the best interests of the Owner. The drawings and specifications covering other work to be done in the building shall be carefully studied and arrangements shall be made to avoid conflict.

C. The drawings shall be followed where they are definite and provided such procedures do not cause objectionable conditions for equipment provided installed under this Contract. The drawings are intended to indicate the sizes of ductwork and if certain sizes are omitted or unclear, obtain additional information before proceeding.

D. Locate and size all openings for ductwork in the building construction. Provide all sleeves as hereinbefore specified.

E. Provide access doors in ductwork at the following locations:

1. Both sides of all coils
2. Fire dampers
3. Smoke dampers
4. Fire/Smoke dampers
5. Both sides of automatic dampers
6. Humidifiers
7. Both sides of filters
8. At a maximum of 20'-0" and at every change in direction in kitchen exhaust system and/or as required by code.
9. At all exhaust and intake plenums, doors shall allow full body access in all plenums over 4'-0" tall.
10. Otherwise indicated or specified

F. Provide labels with a minimum of 1" high red letters on white background. Each access door shall be labeled as follows (or worded as required by Code):

1. Fire Damper
2. Fire/Smoke Damper
3. Smoke Damper
4. Kitchen Exhaust Cleanout - Keep Access Clear
5. Automatic Damper
6. Humidifier
7. Filter Access
8. Coil Access

G. The installation of special items of equipment in the duct systems, including automatic dampers, thermostats, thermometers, duct airflow measuring devices and other related controls, shall be done by this Contractor under the direct supervision of the manufacturer of such controls.

H. All elbows, tees and branch takeoffs in round ductwork shall be made of the same materials as the ductwork.

I. Duct connections to equipment shall be in no case smaller than the equipment openings.

J. All openings for pitot tube traverses shall be fitted with neat removable plugs or caps. As a minimum, such openings shall be provided at every fan inlet and at such other points as may be required for airflow measuring and balancing. Coordinate the location of plugs and caps with the Balancing Contractor.

K. All internally lined duct sections and joints shall be closely inspected by the contractor before and after each piece is erected. Loose edges, open joints, damaged areas and other defects shall be sealed securely so as to insulate all metal surfaces and so as to endure without falling in the presence of moving air. All liner applications shall comply with SMACNA "Duct Liner Application Standard".

L. Provide other miscellaneous sheet metal work shown on the drawings including blanking off portions of louvers not required for the specific usage and diffusion plates or mixing air scoops to allow for air mixing where job conditions require the provision of same. All above work shall be provided as part of this Contract at no extra cost to the Owner.

M. Where applicable and as approved by the Architect, all exposed ductwork shall be installed in a workmanlike manner to result in a neat appearance with no visible penetrations, screws, or other sheet metal imperfections.

N. Install all UL classified devices in accordance with their UL approved installation sheets.

O. Counterflashing of duct penetrations through roof shall be provided under this Contract.

3.2 DUCT HANGERS AND SUPPORTS

A. Provide suitable angle iron/strap hangers and supports inside the mechanical shafts, mechanical rooms and in ceilings of the buildings, and on the roof(s) as shown on the drawings (Architectural/HVAC). This work shall be performed as required by job conditions and as instructed by the Architect in the field to support all air distribution ductwork and devices in both horizontal and vertical planes.

B. When hanging and supporting the ductwork, the following shall be complied with:

1. Except as otherwise noted, ductwork up to 42" in greatest dimension shall be hung by using sheet metal bands secured as a minimum at (2) locations to the vertical sides of the ductwork and at (1) location under the duct. All support systems shall be compatible with the building structure and roofing system as approved by the Architect.

2. Where ductwork major axis dimension is larger than 42", ductwork shall be hung by using rods of not less than 3/8" soft steel secured to angle iron/unistrut trapeze support frame around ductwork with threaded nuts for securement and adjustment. All rods used on ductwork exposed in finished spaces shall be plain smooth rods threaded only at the ends.

3. Ductwork shall be securely attached to the building construction. The hanger design and spacing shall be governed by the major duct dimension and shall be in accordance with SMACNA Duct Manual, except as modified hereinbefore. Vertical ductwork shall be supported at each floor level in an approved manner using angles or channels attached to the ducts. The installation, when complete and under operating conditions, shall be free from chatter or vibration. If necessary to achieve this, additional supports and/or bracing shall be furnished without extra cost to the Owner. Supports and bars and similar items shall be primed and painted structural steel. Touch up with aluminum paint any surfaces where galvanizing is destroyed on indoor ductwork, zinc primer on exposed ductwork with a final coat of aluminum paint. Provide vibration isolation hangers where specified under Vibration Isolation Section of these specifications. Explosive powder studs or detonator assisted studs or anchors will not be permitted.

4. The Sheet Metal Contractor shall provide all supplemental steel required to support the ductwork in shafts, mechanical rooms or on the floor where structural steel is not properly positioned. Beam clamps shall be double sided.

5. The maximum hanger spacing shall be 10'-0" on centers and additionally on each side of an elbow or change-in-direction fitting.

6. In addition to the above, provide supports on each side of any duct mounted device, fans, coils, flow measuring stations, framed dampers, etc., to permit removal of the device without disconnecting adjacent duct sections.

7. Provide angle sway bracing to the structure wherever lateral loads would be imposed on the ductwork, including but not limited to:

a. Elbows downstream of fan discharges.
b. Ductwork exposed to the weather subject to wind loads.

8. Ductwork mounted on the roof or otherwise exposed to the elements shall be supported with frames constructed of galvanized steel angles and channels regardless of duct size.

   a. Coordinate all roof supports with General Contractor/Construction Manager.

   b. Provide diagonal cross bracing between supports as required to sustain maximum area wind loads as dictated by the Architect.

   c. Refer to Specification Section 230548 for vibration and seismic restraint requirements.

9. The Sheet Metal Contractor shall provide expansion compensators, anchors and guides on all high temperature ductwork (breeching, high temperature supply/exhaust) as required.

3.3 SHEETMETAL TESTING

A. General

1. All ductwork that is required to be tested shall be tested on regular intervals as the job proceeds and shall be completed prior to enclosure in shafts, above ceilings or behind walls.

2. The Sheet Metal Contractor shall keep an up-to-date log of the ductwork tested for review by the Architect. The test records shall include marked drawings showing the system/area tested. The testing system/area shall be designated with unique naming. Testing documentation shall include pressure class, system, dates, calculations, allowable leakage, tested leakage and signatures. Testing results shall be Pass or Fail. The Sheet Metal Contractor shall notify all other Contractors when the testing is completed and accepted to permit enclosure of ducts. All test documentation shall be submitted as part of the project close out documentation package.

3. The Sheet Metal Contractor shall furnish and install all blank off plates, blind flanges, safing, etc., necessary to isolate each section of duct being tested for leakage.

4. The Sheet Metal Contractor shall submit for review all proposed testing procedures, sample report, and equipment to the Engineer prior to proceeding. Additionally, the Sheet Metal Contractor shall notify the Engineer when testing is to occur so that the test can be witnessed at the Engineer's option.

5. All test equipment shall be calibrated per ANSI Standards prior to testing. Certified test reports shall be submitted to the Architect prior to commencement of the testing.

6. Testing Procedure

   a. The testing procedure shall be in accordance with SMACNA "HVAC Air Duct Leakage Test Manual".

   b. The test pressure shall be the specified construction pressure of the duct system.

7. Scope of Testing

   a. All ductwork (regardless of pressure class) that will be in inaccessible areas including, but not limited to, all ducts within shafts, above hard ceilings, and those that will be made inaccessible by the work of other Trades. (This shall include ±2" w.g. construction.)

   b. All ductwork constructed to greater than +2" w.g. or less than -2" w.g.

   c. All other sheet metal in duct systems constructed to ±2" w.g. shall be tested under normal fan pressure and shall not leak sufficiently to cause audible leaks or blowing detectable by hand. **If, in the opinion of the Architect, the ductwork does not appear to be constructed and/or sealed to the approved shop standards, the Architect may request any or all of this ductwork to be tested at the specified construction pressure.**

   d. Allowable Leakage

      1) The total allowable leakage shall be less than specified leakage class with no audible leaks.
      2) If no leakage class is listed elsewhere, the system shall meet leakage Class 4.
      3) All duct risers shall be tested with branch takeoffs, fire dampers and access doors installed. Duct leakage shall be calculated based on duct surface area per SMACNA Test Manual. The duct surface area method shall include all seams, joints and other duct surface connections for take-offs, fire dampers and access doors, etc.

3.4 DUCT CLEANING

A. Clean dust and debris from interior and exterior of all ducts using wet rags and vacuums.

B. Cover open ends of ductwork when installation does not proceed for more than one day. This requirement shall apply to each individual run of duct, such that no duct section shall remain open or unconnected for more than 8 hours.

END OF SECTION

SECTION 23 3319 – SOUND ATTENUATORS

PART 1 - GENERAL

1.1 RELATED DOCUMENTS

A. Drawings and general provisions of the Contract, including General and Supplementary Conditions, Section 230500 and other Division 1 Specification Sections, apply to this Section.

B. LEED Building General Requirements: The Owner requires the Contractor to implement practices and procedures to meet the project's environmental performance goals, which include achieving LEED Certification. Specific project goals that may impact this area of work include: Use of recycled-content materials; use of locally-manufactured materials; use of low-emitting materials; construction waste recycling; and the implementation of a construction indoor air quality management plan. The Contractor shall ensure that the requirements related to these goals, as defined in the sections below, are implemented to the fullest extent. Substitutions, or other changes to the work proposed by the Contractor or their Subcontractors, shall not be allowed if such changes compromise the stated LEED Building Performance Criteria.

1. Comply with LEED (Leadership in Energy and Environmental Design) Green Building Rating System BD+C, Version 3.

1.2 WORK INCLUDED

A. Duct Sound attenuators.

B. Unit Sound attenuators.

C. Space Sound attenuators.

1.3 RELATED SECTIONS

A. Examine all drawings and criteria sheets and all other Sections of the Specifications for requirements which affect work under this Section whether or not such work is specifically mentioned in this Section.

B. Section 017419 "Construction Waste Management and Disposal" for requirements related to construction waste management and disposal at the project site.

C. Section 018113 "VOC Limits for Adhesives, Sealants, Paints and Coatings" for restrictions of VOC in adhesives, sealants, paints and coatings.

D. Section 018119 "Construction Indoor Air Quality (IAQ) Management" for requirements during construction for indoor-air-quality management.

1.4 REFERENCES

A. NFPA 90A - Installation of Air Conditioning and Ventilation Systems.

B. UL 181 - Factory-Made Air Ducts and Connectors.

C. NFPA 70 - Electric Duct Heaters.

D. ASTM A 653/A653M Steel Sheet, Zinc Coated Galvanized.

E. ASTM C 553 Mineral fiber Blanket and felt.

F. ASTM C 612 Mineral fiber Block and Board Thermal insulation.

G. ASTM E 84 Surface Burning Characteristics of Building materials.

H. NFPA 255 Surface Burning Characteristics of Building materials.

I. UL 723 Surface Burning Characteristics of Building materials.

J. ASTM E-477-99

1.5 SUBMITTALS

A. See Section 230500 and General Conditions for additional requirements.

B. Submit shop drawings and product data sheets indicating configuration, general assembly, and materials used in fabrication.

C. Submit product performance data indicating design air flow, minimum static pressure drop at operating condition.

D. Submit sound power and noise criteria (NC) values for radiated and discharge paths.

E. Submit installation, operation and maintenance documentation.

F. The manufacturer shall supply certified test data for each scheduled silencer. The data shall include dynamic insertion loss, generated noise and pressure drop for forward or reverse flow, matching the project's air distribution system requirement. All ratings shall be conducted in the same facility and shall utilize the same silencer.

G. Test facilities and test reports shall be open to inspection upon request from the Engineer. Silencer performance must have been substantiated by laboratory testing according to ASTM E-477-99 and so certified when submitted for approval.

H. Acoustic laboratory must be NVLAP accredited for the ASTM E-477-99 test standard. A copy of the accreditation certificate shall be included with the submittals. **Data from non-NVLAP accredited test facilities will not be accepted**.

1.6 QUALIFICATIONS

A. Manufacturer: The company manufacturing the products specified in this section shall have a minimum of ten years experience producing products of this type.

1.7 WARRANTY

A. Provide manufacturer's parts warranty for one year from unit start-up.

PART 2 - PRODUCTS

2.1 GENERAL

A. Acceptable manufacturers contingent on compliance with the specifications:

1. Vibro Acoustics
2. VAW Systems
3. Dynasonics
4. United McGill
5. Kinetics Noise Control
6. Commercial Acoustics
7. Price

B. Silencers in aluminum systems shall be aluminum with all casing gauges adjusted accordingly.

C. Silencers in stainless steel systems shall be stainless steel.

D. Silencer in galvanized systems shall be galvanized steel.

E. Silencer in welded systems shall be continuously welded. See sheet metal section.

F. All gauges are based on steel. If aluminum is required equivalent strength aluminum gauges shall be used.

2.2 CIRCULAR SILENCERS

A. All circular silencers shall be constructed with a casing of a minimum gauge noted below and minimum 22 gauge galvanized perforated internal liner. All casing seams and joints shall be lockformed and sealed or stitch welded and sealed except welded system shall be continuously welded.

	Casing Diameter	Casing Gauge
1.	Less than 30"	20
2.	30" to 54"	18
3.	Over 54"	16

B. All packless circular silencers shall be constructed with a casing of a minimum gauge noted below and minimum 26 gauge perforated internal liner. All casing seams and

joints shall be lockformed and sealed except welded systems shall be continuously welded.

	Connection Diameter	Casing Gauge
1.	Less than 18"	22
2.	18" to 30"	20
3.	30" to 54"	18
4.	Over 54"	16

C. All welded silencers shall be a minimum of 16 gauge.

2.3 RECTANGULAR SILENCERS

A. All rectangular silencers shall be constructed with a casing of a minimum gauge noted below and minimum 22 gauge perforated internal liner. All casing seams and joints shall be lock-formed and sealed except welded systems shall be continuously welded.

	Connection Dimension	Casing Gauge
1.	Less than 48"	22
2.	Over 54"	Provide Calculations

B. All welded silencers shall be a minimum of 16 gauge.

2.4 ELBOW SILENCERS

A. All elbow silencers shall be constructed with a minimum 18 gauge outer casing and minimum 22 gauge perforated internal liner. All acoustical splitters shall be internally radiused and aerodynamically designed for efficient turning of the air. Half and full splitters are required as necessary to achieve the scheduled insertion loss. All elbow silencers with a turning cross-section dimension greater than 48” shall have at least two half splitters and one full splitter.

B. All welded silencers shall be a minimum of 16 gauge.

2.5 TRANSITIONAL SILENCERS

A. All transitional rectangular silencers shall be constructed with a minimum of 22 gauge outer casing and minimum 22 gauge perforated internal liner. Transitioning shall occur internal to the silencer such that the height of the gap or air passage is uniformly changing with the length of the splitters.

B. All welded silencers shall be a minimum of 16 gauge.

2.6 ACOUSTIC MEDIA:

A. Dissipative and Film Lined silencers:

1. Media shall be of acoustic quality, shot-free glass fiber insulation with long, resilient fibers bonded with a thermosetting resin. Glass fiber density and compression shall be as required to insure conformance with laboratory test data. Glass fiber shall be packed with a minimum of 15% compression during silencer assembly. Media shall be bacteria and fungus resistant, resilient such that it will not crumble or break, and conforming to irregular surfaces. Media shall not cause or accelerate corrosion of aluminum or steel. Mineral wool will not be permitted as a substitute for glass fiber.

B. Packless (No-Media silencers):

1. All No-Media silencers shall not contain absorptive media of any kind. Attenuation shall be achieved with controlled impedance membranes and broadly tuned resonators.

2.7 MEDIA PROTECTION

A. Dissipative silencers:

1. Where indicated on the silencer schedule, media shall be encapsulated in glass fiber cloth to help prevent shedding, erosion and impregnation of the glass fiber. Axial Cone silencers shall have a glass fiber cloth liner.

B. Film Lined silencers:

1. The acoustic media shall be completely wrapped with Tedlar film to help prevent shedding, erosion and impregnation of the glass fiber.

2. The wrapped acoustic media shall be separated from the perforated metal by a factory installed ½" thick acoustically transparent spacer.

a. The spacer shall be flame retardant and erosion resistant.

b. A mesh, screen or corrugated perforated liner will not be acceptable as a substitute for the specified spacer.

2.8 COMBUSTION RATINGS

A. Dissipative silencers:

1. Silencer materials, including glass fiber shall have maximum combustion ratings as noted below when tested in accordance with ASTM E84, NFPA 255 or UL 723.

a. Flamespread Classification: 15
b. Smoke Development Rating: 5

2.9 FILM LINED SILENCERS

A. Silencer materials, including glass fiber, Tedlar film and acoustical spacer shall have maximum combustion ratings as noted below when tested in accordance with ASTM E84, NFPA 255 or UL 723.

1. Flamespread Classification: 20
2. Smoke Development Rating: 45

2.10 HTL CASINGS(HIGH TRANSMISSION LOSS)

A. Where indicated on the silencer schedule, silencers shall have high transmission loss (HTL) walls externally applied and completely sealed to the silencer casing by the silencer manufacturer to assure quality controlled transmission loss. The HTL walls shall consist of media, airspace, mass and outer protective metal skin, as required, to obtain the specified room noise criteria. Standard acoustical panels will not be accepted as HTL walls. If requested by the Engineer, breakout noise calculations for each air handling and fan system shall be provided with the silencer submittal to insure compliance with the room noise criteria. Breakout noise calculations shall be based on the sound power levels of the specified equipment.

PART 3 - EXECUTION

3.1 CONSTRUCTION

A. Silencers shall be constructed in accordance with ASHRAE and SMACNA standards for the pressure and velocity classification specified for the air distribution system in which it is installed. Material gauges noted in “Section B Materials”, are minimums.

1. Material gauges shall be increased as required for the system pressure and velocity classification.

2. The silencers shall not fail structurally when subjected to a differential air pressure of 12 inches water gauge.

B. Casings shall be lock-formed and sealed, except as noted in Section B Materials, to provide leakage-resistant construction. Airtight construction shall be achieved by use of a duct-sealing compound supplied and installed by the contractor at the jobsite.

C. All perforated metal shall be adequately stiffened to insure flatness and form. All spot welds shall be painted.

PART 4 - SCHEDULES

4.1 SEE DRAWINGS FOR SCHEDULES

4.2 ACOUSTIC PERFORMANCE

A. Silencer dynamic insertion loss shall not be less than that listed in the silencer schedule.

B. Silencer generated noise shall not be greater than that listed in the silencer schedule.

C. Acoustic performance shall include dynamic insertion loss and generated noise for forward flow (air and noise in same direction) or reverse flow (air and noise in opposite direction) in accordance with the project's air distribution system requirements.

D. All silencer ratings shall be determined in a duct-to-reverberant room test facility which provides for airflow in both directions through the test silencer in accordance with the ASTM E-477-99 test standard. The test set-up, procedure and facility shall eliminate all effects due to flanking, directivity, end reflection, standing waves and reverberation room absorption.

4.3 AERODYNAMIC PERFORMANCE

A. Silencer pressure drops shall not exceed those listed in the silencer schedule. Silencer pressure drop measurements shall be made in accordance with the ASTM E-477-99 test standard. Tests shall be conducted and reported on the identical units for which acoustical data is presented.

END OF SECTION

SECTION 23 3600 - AIR TERMINAL BOXES

PART 1 - GENERAL

1.1 RELATED DOCUMENTS

A. Drawings and general provisions of the Contract, including General and Supplementary Conditions, Section 230500 and other Division 1 Specification Sections, apply to this Section.

B. LEED Building General Requirements: The Owner requires the Contractor to implement practices and procedures to meet the project's environmental performance goals, which include achieving LEED Certification. Specific project goals that may impact this area of work include: Use of recycled-content materials; use of locally-manufactured materials; use of low-emitting materials; construction waste recycling; and the implementation of a construction indoor air quality management plan. The Contractor shall ensure that the requirements related to these goals, as defined in the sections below, are implemented to the fullest extent. Substitutions, or other changes to the work proposed by the Contractor or their Subcontractors, shall not be allowed if such changes compromise the stated LEED Building Performance Criteria.

1. Comply with LEED (Leadership in Energy and Environmental Design) Green Building Rating System BD+C, Version 3.

1.2 WORK INCLUDED

A. Terminal unit assembly.

B. Heating coils.

1. Electric resistance.
2. Hot water.

C. Sound attenuator.

D. Terminal Unit Controls

1. Direct digital.

a. By ATC

E. Single Duct Terminal Units

1. Exhaust and return terminal units.
2. Variable volume.
3. Constant volume.

1.3 RELATED SECTIONS

A. Examine all drawings and criteria sheets and all other Sections and divisions of the Specifications for requirements which affect work under this Section whether or not such work is specifically mentioned in this Section.

B. Section 017419 “Construction Waste Management and Disposal” for requirements related to construction waste management and disposal at the project site.

C. Section 018113 “VOC Limits for Adhesives, Sealants, Paints and Coatings” for restrictions of VOC in adhesives, sealants, paints and coatings.

D. Section 018119 “Construction Indoor Air Quality (IAQ) Management” for requirements during construction for indoor-air-quality management.

1.4 REFERENCES

A. NFPA 90A - Installation of Air Conditioning and Ventilation Systems.

B. UL 181 - Factory-Made Air Ducts and Connectors.

C. NFPA 70 - Electric Duct Heaters.

D. UL 1995, Heating and Cooling Equipment.

E. CUL C22.2 No. 236, Heating and Cooling Equipment.

F. ARI 880 - Air-Conditioning and Refrigeration Institute Standard Rating Conditions for Air Terminals

G. ASTM A 653/A653M (Steel Sheet, Zinc Coated Galvanized).

H. A-A-1419 or F-F-310 Federal specification (filter element, Air conditioning, Viscous-impingement or Dry type, replaceable), Tested per UL 900.

1.5 SUBMITTALS

A. See Section 230500 and General Conditions for additional requirements.

B. Submit shop drawings and product data sheets indicating configuration, general assembly, and materials used in fabrication.

C. Submit product performance data indicating design air flow, minimum static pressure drop, fan operating condition.

D. Submit sound power and noise criteria (NC) values for radiated and discharge paths.

E. Submit installation, operation and maintenance documentation.

1.6 QUALIFICATIONS

A. Manufacturer: The company manufacturing the products specified in this section shall have a minimum of ten years experience producing products of this type.

1.7 SYSTEM RESPONSIBILITY

A. The Contractor shall be responsible for any and all costs associated with any and all changes resulting from the use of a supplier other than the listed acceptable manufacturers.

1.8 WARRANTY

A. Provide manufacturer's parts warranty for one year from unit start-up.

PART 2 - PRODUCTS

2.1 GENERAL

A. Acceptable manufacturers contingent on compliance with the specifications:

1. Enviro-Tec
2. Price
3. Nailor
4. Anemostat

B. Provide Terminal unit assemblies with:

1. Operating characteristics and other requirements so as to comply with schedules and details on the drawings and as hereinafter specified.

2. The physical sizes of units shall not be larger than the scheduled units.

3. Terminal units shall be UL listed as an entire assembly.

4. Terminal units shall be UL Labeled as an entire assembly.

5. Shall be lined with thermal and acoustic insulation meeting "Hospital Grade".

6. Access doors securely attached to the box upstream of the heating coil.

7. Access doors securely attached to the box downstream of the heating coil.

8. Identification label

a. Identify each terminal unit with clearly marked with:

1) Box Identification number matching the drawings
2) Air flow.
3) Maximum factory-set air flow.
4) Minimum factory-set air flow.

5) Coil type.

b. Direction of air flow

C. Primary Air Valve

1. Minimum 22 gauge cylindrical body

2. Damper Blade

a. Connected to a solid shaft by means of an integral molded sleeve which does not require screw or bolt fasteners.
b. Minimum of 20 gauge.

3. The shaft shall include a damper position indicator visible from the exterior of the unit.

4. The damper shall pivot in self-lubricating bearings.

5. The damper actuator shall be mounted on the exterior of the terminal for ease of service.

6. The valve assembly shall include internal mechanical stops for both full open and closed positions.

7. The damper blade seal shall be secured without use of adhesives.

8. The air valve leakage shall not exceed 1% of maximum inlet rated airflow at 3" w.g. inlet pressure.

9. Damper shall pivot in nylon self-lubricating bearings

10. Damper shall remain unaffected by temperature and humidity.

D. Primary Air Pressure Sensor

1. The primary air valve shall include a differential pressure type sensor upstream of the damper blade.

2. The sensor shall traverse the inlet collar (for total pressure) along (2) axis. A minimum of (12) sensing points shall be utilized.

3. The sensor shall be accessible and removable for easy cleaning.

4. Each sensing point shall be located for accuracy.

5. The sensor shall be designed to average the pressure signals.

6. The average signal of these pressures shall pass to the control device signal through a single port.

7. Brass balancing taps and airflow calibration charts shall be provided for field measurements.

8. The sensor shall be designed to provide an amplified differential pressure signal.

9. Signal shall provide accurate control of the air flow to or below the minimum flows scheduled and to one half the minimum for variable volume units.

10. Documentation shall be submitted which substantiates this requirement.

E. Manufacturer shall participate in the ARI Certification program.

F. Unit performance data shall be rated in accordance with ARI Standard 880.

G. The manufacturer shall display the ARI Symbol on all units.

1. Insulation

a. Minimum thickness of 1.0”
b. Comply with:

1) NFPA-90A.
2) UL 181
3) UL 723
4) ASTM 84
5) Bacteriological standard ASTM C 665.

c. Minimum R-Value shall be 4.6.

d. Hospital Grade

e. All insulation edges shall be metal encased.

f. Adhesive shall comply with NFPA 90A

g. Secured to the terminal casing using mechanical fasteners in addition to adhesive.

2. Type

a. Foil Faced fiberglass

1) Minimum Density 2.0 lb./cu. ft.

2) The interior foil liner shall allow for cleaning of the terminal unit interior surfaces.

H. Testing

1. General

a. All tests shall be preformed in a certified laboratory.

2. Unit leakage

a. Assemble leakage including all devices, box, coil, attenuator, access doors, and fittings:

1) Shall be less then leakage class 6 at ±3 “w.g.

3. Unit performance

a. A assembly shall consist of valve, coil attenuator and transitions as called for on the documents

b. The performance of the assembly shall be tested and certified.

1) Each box size shall be tested with:

a) Coils
b) Sound attenuators
c) Box
d) Each Flow configuration.

2) With an inlet static of 1 ½“w.g. at the system side of the supply box.

3) With an inlet static of -1 ½“w.g. at the system side of the exhaust box.

c. These tests shall include the pressure lose of each component and the sound power levels in each octave band leaving the assembly.

I. Heating Coils

1. All supply terminals scheduled with a heating coils shall be equipped hot water heating:

a. Coils shall be enclosed in a sheet metal casing.

b. Coils casing shall be insulated.

1) Minimum R 6.0

c. The maximum coil air velocity shall be as scheduled.

d. The minimum coil performance shall be as scheduled.

e. The maximum pressure drop scheduled shall not be exceeded at the box maximum CFM.

f. Coils shall be removable.

g. Coils shall have access doors upstream and downstream of coil.

h. Coils shall have left- or right-hand connections to suit job conditions

i. Two (2) rows to meet heating requirements.

j. Coils shall have aluminum plate fins maximum of 6 fins per inch.

k. Tested with 400 psig hydrostatic pressure (underwater).

l. The minimum fin thickness shall be 0.095 inches.

m. All coils shall be performance certified in accordance with ARI 410 (latest Edition).

J. Sound Attenuators

1. Minimum sheet metal gauge 20.

2. Hospital grade lining.

3. Minimum performance to meet scheduled data.

4. Pressure drop of the assembled package as tested shall not exceed the scheduled performance.

K. Unit Controls

1. DDC Controls with:

a. Terminal unit controls.

b. Transformers

c. Actuators shall be DDC.

d. Furnished and shipped to the box manufacturer by the ATC Contractor.

e. The ATC Contractor shall be responsible for all costs associated with shipping the controls to the terminal box manufacturing facility.

f. Box damper actuators, transformers and controller shall be installed by the box manufacturer.

g. The box manufacturer shall factory mount and wire the controller and actuator in accordance with the ATC Contractor's instructions.

h. Controller installation costs shall be borne by the airflow terminal box manufacturer.

i. Box manufacturer shall provide velocity inlet probe and NEMA control cover.

Note: Controller and actuator specified in ATC.

2.2 SINGLE-DUCT TERMINAL UNITS

A. Provide air terminal units (boxes) of the single duct type, with:

1. Heating coils:

2. Sound attenuators, meeting the performance scheduled.

3. Units shall be similar to Enviro-Tec Model SDR -SA-WC or Model SDL -SA-WC

B. Terminal casings shall be :

1. Minimum 22 gauge sheet metal casing and insulation

2. Primary valve: See Products – General

3. Primary Air Pressure Sensor: See Products – General

4. Terminal shall be assembled and sealed for an airtight casing:

a. Meet SMACNA leakage class 3 at 3” w.g.

5. Attenuators See Products – General.

2.3 SINGLE DUCT RETURN OR EXHAUST BOX

A. Similar to single duct terminal units except.

1. Boxes shall be provided with an inlet of the VAV sensing neck to minimize pressure drop.

2. Designed with the sound attenuator on the room side.

B. Single Duct Terminal Unit Controls

1. DDC Controls See Products – General

PART 3 - EXECUTION

3.1 INSTALLATION

A. The air terminal boxes shall be installed in accordance with manufacturer recommendations, Contract Drawings and reviewed submittals.

B. The inlet duct size shall be as noted on the plans and/or the schedule. Air terminal boxes shall be connected to the sheet metal per requirements found herein under "Sheet Metal Work" Section.

C. Terminal boxes shall be installed with adequate service space to access the controller side of the unit and the reheat coil control valve.

D. Provide an access door in ductwork downstream of heating coil in addition to access door on unit upstream of coil. Label all access doors in accordance with labels specified under "Sheet Metal Installation" Section.

E. Support each box adequately and independently without blocking access doors, control instrument access, or any other required access.

END OF SECTION

SECTION 233620 – LABORATORY SYSTEM

PART 1 - GENERAL

1.1 RELATED DOCUMENTS

A. Drawings and general provisions of the Contract, including General and Supplementary Conditions, Section 230500 and other Division 1 Specification Sections, apply to this Section.

B. LEED Building General Requirements: The Owner requires the Contractor to implement practices and procedures to meet the project's environmental performance goals, which include achieving LEED Certification. Specific project goals that may impact this area of work include: Use of recycled-content materials; use of locally-manufactured materials; use of low-emitting materials; construction waste recycling; and the implementation of a construction indoor air quality management plan. The Contractor shall ensure that the requirements related to these goals, as defined in the sections below, are implemented to the fullest extent. Substitutions, or other changes to the work proposed by the Contractor or their Subcontractors, shall not be allowed if such changes compromise the stated LEED Building Performance Criteria.

1. Comply with LEED (Leadership in Energy and Environmental Design) Green Building Rating System BD+C, Version 3

1.2 WORK INCLUDED

A. A laboratory airflow control system shall be furnished and installed to control the airflow into and out of laboratory rooms. The exhaust volume of a laboratory fume hood shall be precisely controlled by an Adaptive Face Velocity controller to maintain a constant average face velocity into the fume hood at either a standard/in-use or standby level based on actual hood usage. The laboratory control unit shall vary the amount of air into the room to maintain temperature control, minimum ventilation, airflow balance, and laboratory pressurization in relation to adjacent spaces (positive or negative). All laboratory airflow control systems devices shall be by a single manufacturer.

1.3 RELATED SECTIONS

A. Examine all drawings and criteria sheets and all other Sections of the Specifications for requirements which affect work under this Section whether or not such work is specifically mentioned in this Section.

B. Section 017419 "Construction Waste Management and Disposal" for requirements related to construction waste management and disposal at the project site.

C. Section 018113 "VOC Limits for Adhesives, Sealants, Paints and Coatings" for restrictions of VOC in adhesives, sealants, paints and coatings.

D. Section 018119 "Construction Indoor Air Quality (IAQ) Management" for requirements during construction for indoor-air-quality management.

1.4 REFERENCES

A. NFPA 90A - Installation of Air Conditioning and Ventilation Systems.

B. UL 181 - Factory-Made Air Ducts and Connectors.

C. NFPA 70 - Electric Duct Heaters.

D. UL 1995, Heating and Cooling Equipment.

E. CUL C22.2 No. 236, Heating and Cooling Equipment.

F. ARI 880 - Air-Conditioning and Refrigeration Institute Standard Rating Conditions for Air Terminals

G. ASTM A 653/A653M (Steel Sheet, Zinc Coated Galvanized).

H. A-A-1419 or F-F-310 Federal specification (filter element, Air conditioning, Viscous-impingement or Dry type, replaceable), Tested per UL 900.

1.5 SUBMITTALS

A. See Section 230500 and General Conditions for additional requirements.

B. Submit shop drawings and product data sheets indicating configuration, general assembly, and materials used in fabrication.

C. Submit product performance data indicating design air flow, minimum static pressure drop, fan operating condition.

D. Submit sound power and noise criteria (NC) values for radiated and discharge paths.

E. Submit installation, operation and maintenance documentation.

F. The manufacturer shall provide a separate concordance schedule which shall include the section, paragraph, and subparagraph of these specifications and direct statement to indicate compliance or non-compliance with the requirements. For all areas of non-compliance the manufacturer shall describe what specific and alternative approach has been taken and document the impact this will have on the sizing of the air delivery systems, the required cooling and heating capacities, energy costs, and diversity of the building.

1.6 QUALIFICATIONS

A. Manufacturer: The company manufacturing the products specified in this section shall have a minimum of ten years experience producing products of this type.

1.7 SYSTEM RESPONSIBILITY

A. The contractor shall be responsible for any and all costs associated with any and all changes resulting from the use of a supplier other than the listed acceptable manufacturers.

1.8 WARRANTY

A. Warranty shall commence upon the date of acceptance and extend for a period of thirty six months whereupon any defects in materials or system performance shall be repaired by the manufacturer at no cost to the owner.

PART 2 - PRODUCT

2.1 ACCEPTABLE MANUFACTURERS

A. Sole Acceptable Manufacturer contingent on compliance with the specifications:

1. Phoenix Controls
2. Accutrol

B. The Engineer shall be the sole judge of quality and performance equivalence of equipment, materials, and methods.

2.2 SYSTEM PERFORMANCE REQUIREMENTS

A. The laboratory airflow control system shall be fully stand-alone for each individual laboratory. The system shall not use or rely on information from controllers in other laboratory areas to control the functions within its laboratory.

B. The laboratory airflow control system shall also maintain intersystem stability within one second of a change in pressure and/or flow to eliminate hunting, system oscillations, and crosstalk between airflow controllers.

C. The laboratory airflow control system shall use volumetric offset control to maintain room pressurization and auxiliary fume hood make-up air tracking. The system shall respond and maintain room pressurization (negative or positive) within one second of a change in room/system conditions.

D. The laboratory airflow control system shall maintain specific airflow (±5% of signal within one second of a change in duct static pressure) regardless of the magnitude of the pressure change airflow change or quantity of airflow control devices on the manifold (within 0.6” to 3.0” wc).

E. The laboratory airflow control system shall use volumetric offset control to maintain room pressurization. The system shall maintain proper room pressurization polarity (negative or positive) regardless of any change in room/system conditions such as rapid changes in duct static pressure.

F. The laboratory airflow control system shall maintain specific airflow (±5% of signal) with a minimum 15 to 1 turndown to insure accurate pressurization at low airflow and guarantee the maximum system diversity and energy efficiency.

G. Experience

1. The laboratory airflow control system supplier shall provide a list of at least three similar laboratory airflow control systems installed in the state or province as part of this proposal.
2. The laboratory airflow control system supplier shall provide the names, addresses, and the telephone numbers of the Consulting Engineer and the Owner's representative for each of these installations. It is understood that these individuals may be contacted regarding timely delivery, the quality of installation, the operation and performance of the equipment and the service requirements for each installation. Unsatisfactory performance or inability to provide references shall be grounds for rejection.

2.3 FUME HOOD MONITOR (WITH LED OR NUMERICAL DISPLAY)

A. Fume hood monitor shall include an LED alert light display or numerical velocity display to indicate a relative measure of hood face velocity, visual indication for normal operation, visual and audible alarm for an unsafe alert and visual and audible alarm to indicate emergency exhaust operation.

B. A push-button switch shall be provided to mute the audible alarm. The mute mode is automatically reset when the alarm condition ceases.

2.4 AIRFLOW CONTROL DEVICE - GENERAL

A. The airflow control device shall be pressure independent over its specified differential static pressure operating range. An integral pressure independent assembly shall respond and maintain specific airflow within one second of a change in duct static pressure irrespective of the magnitude of pressure and/or flow change or quantity of airflow controllers on a manifolded system.

B. The airflow control device shall maintain accuracy within ±5% of signal over an airflow turndown range of no less than 15 to 1.

C. Minimum entrance or exit duct diameters shall be required to ensure accuracy and/or pressure independence.

D. The airflow control device shall be constructed of one of the following two types:

1. Class A-The airflow control device for non-corrosive airstreams such as room/lab supply and general exhaust shall be constructed of 16 gauge aluminum. The device's shaft and shaft support brackets shall be made of 316 stainless steel. The pivot arm and internal mounting link shall be made of aluminum. The pressure independent springs shall be spring-grade stainless steel. All shaft bearing surfaces shall be made of a Teflon, or polyester, or PPS (polyphenylene sulfide) composite.

a. Sound attenuating devices used in conjunction with general exhaust or supply airflow control devices shall be constructed using 24 gauge galvanized steel or other suitable material used in standard duct construction. Refer to project schedule for compliance of external sound attenuator devices.

2. Class B-The airflow control device for corrosive airstreams such as fume hoods and bio-safety cabinets shall have baked-on corrosion resistant phenolic coating. The device's shaft shall be made of 316 stainless steel with a Teflon coating. The shaft support brackets shall be made of 316 stainless steel. The pivot arm and internal mounting link shall be made of 316 or 303 stainless steel. The pressure independent springs shall be a spring grade stainless steel. The internal nuts, bolts and rivets shall be stainless steel. All shaft bearing surfaces shall be made of Teflon or PPS (polyphenylene sulfide) composite.

    a. Sound attenuating devices used in conjunction with fume hood and biosafety cabinet exhaust or supply airflow control devices shall be constructed using minimum 24 gauge stainless steel or other suitable material used in standard duct construction. Refer to project schedule for compliance of external sound attenuator devices.

E. Shut-Off Valve Airflow Control Device

1. The Shut-off Valve airflow control device shall, in all ways, comply with the Airflow Control Device—General and Exhaust and Supply Airflow Control Device sections above. In addition, the Shut-off Valve shall provide low leakage isolation of the HVAC system from the controlled space.
2. The Shut-off Valve airflow control device shall have a normal operating range of 0.6" to 3" WC with a shut-off leakage of less than 0.5% of the maximum rated flow at 3" WC or less than 5 CFM at 4" WC. The shut-off must be driven mechanically by the electric actuator.
3. Actuation Speed of Response

    a. For a high-speed electrically actuated Shut-off Valve operation, the maximum time to modulate from the minimum to maximum flow shall be less than 1 second. A UL or CSA listed electronic actuator shall be factory mounted to the valve. Loss of main power shall cause the valve to position itself in an appropriate failsafe state. Options for these failsafe states include: normally open-maximum position, normally closed-minimum position and last position. This position shall be maintained constantly without external influence, regardless of external conditions on the valve (within product specifications).
    b. For a low-speed electrically actuated Shut-off Valve operation, the maximum time to modulate from the minimum to maximum flow shall be less than 60 seconds. A UL or CSA listed electronic actuator shall be factory mounted to the valve. The actuator shall have sufficient torque to modulate the airflow against the maximum duct static pressure (within product specifications). Loss of main power shall cause the valve to maintain its last airflow position. This position shall be maintained until power is restored.

    c. Fail open is unacceptable in the shut-off mode.

4. Shut-off Mode Initiation

    a. The shut-off sequence can be initiated either locally through a universal input from the building management system (BMS) via a dry contact closure,

BACnet communication command or LON command, or remotely through a Local Display Unit (LDU).

b. The Shut-off Valve airflow control device shall provide a shut-off confirmation through a local digital output (DO) or an integrated point.

F. For two-position or VAV operation, an electric actuator shall be factory mounted to the valve. Loss of control power shall cause normally open valves to fail to maximum position, and normally closed valves to fail to minimum position. Electric actuators that fail in last position are not acceptable when used in fume hood and make-up air control applications.

G. Airflow control valves for bio-safety, canopy hoods or point exhaust shall operate in a two-position or constant volume mode as scheduled on the drawings or noted in the Sequence of Operation. Valves shall have both a pressure switch provided and a potentiometer attached to their shaft which allows the valve to be characterized on an airflow station for future upgrade into electronic EXV/MAV valves and be provided with flow feedback. Mechanical clamps assure precise shaft location at the calibrated airflows. The airflow control device shall use closed loop control to lineary regulate airflow with a 0 to 10 volt control signal. The device shall generate a 0 to 10 volt feedback signal that is lineary proportional to its airflow.

H. The controller for the airflow control devices shall be microprocessor based and operate using a peer-to-peer control architecture. The room level airflow control devices shall function as a stand alone network.

I. The room level control network shall utilize a LonTalk communications protocol.

J. There shall be no reliance on external or building level control devices to perform room level control functions. Each laboratory control system shall have the capability of performing; fume hood control, pressurization control, temperature control, and implement occupancy and emergency mode control schemes.

K. The laboratory airflow control systems shall have the option of digital integration with the BMS.

L. Actuation (Electric)

1. For electrically-actuated VAV operation, a UL 916 listed electronic actuator shall be factory mounted to the valve. Loss of main power shall cause the valve to position itself in an appropriate failsafe state for the application. Options for these failsafe states include: normally open maximum position, normally closed minimum position, or last position. Response time for all conditions shall be equal to the pneumatic actuator and as specified.
2. Performance

a. The high-speed electric actuator shall maintain the same critical features for all laboratory applications with fume hoods. One-second speed of response for all valves associated in a lab space with VAV or two position fume hoods or fit out for future fume hoods.

b. ±5% accuracy not to affect valve calibration or accuracy.

c. Ambient conditions (0-50º C, 10-90% RH non-condensing).

3. Power Source and Consumption

a. For Hi-Speed electric actuation
b. Single Valve Body – 48 VA
c. Dual Valve Body – 48 VA
d. 14 AWG stranded wire required
e. All 24 VAC power wiring for high-speed electric actuation must be a minimum of 14 AWG (American Wire Gage) or the ASTM B8 metric equivalent of 2.08 mm².

1) All 24 VAC power wiring shall be dedicated runs from a transformer (star configuration) to the valve controller card power input. A serial (or bus) configuration is not acceptable.
2) Triple and quad valves will require two electric actuators, one for each valve controller.
3) Power Transformers provided by laboratory control manufacturer.
4) 120/240 single phase to 24 Vac transformers

f. Wiring shall be a NEC Class 2 approved circuit
g. Externally fused-for a slow blow type
h. 100 VA max transformers
i. The valve controller shall be powered by 24 VAC in conjunction with the actuator power and controller interface. Hood applications with monitors and zone presence sensors will still require ±15 VDC power supplies.

4. Failsafe

a. Failsafe operation is achieved through the use of a capacitive storage device. No batteries shall be accepted. When not required, the product can be furnished without the failsafe feature providing the option of fail to last position is achieved.

ACTUATOR TYPE	APPLICATION TYPE	FAIL-SAFE OPTION(S)
Low speed electric	Tracking pair	Last position
High-speed electric	Fume hood lab/future	Open/closed/last position

M. Constant Volume Valves For BIO-Safety Cabinets and/or Snorkel Exhaust shall maintain a constant volume pressure independent, manually adjustable, volume setpoint, all valves shall be provided with a pressure switch for alarm status. It shall be factory calibrated and set for desired airflow rate. It shall also be capable of field adjustment for future changes of desired airflow rate. Valve shall not be equipped with any pneumatic or electronic control actuator requirements. Valve construction shall be as described in previous paragraph.

2.5 AIRFLOW CONTROL SOUND SPECIFICATIONS

A. Unless otherwise specified, the airflow control device shall not exceed the sound power levels in Table 1, Table 2 and Table 3.

B. If the airflow control device cannot meet the sound power level specification, a properly sized silencer or sound attenuator must be used. All silencers must be of a packless or no media design (constructed of at least 18 gauge 316L stainless steel when used with fume hood exhaust) with a maximum pressure drop at the device's maximum rated flow rate not to exceed 0.20 inches of water.

C. All proposed airflow control devices shall include discharge, exhaust and radiated sound power level performance.

Table 1. Exhaust Airflow Control Device Sound Power Level

		Exhaust Sound Power Level in dB (re: 10(-12) watts)					
Octave Band Number		2	3	4	5	6	7
Center Frequency in Hz		125 Hz	50 Hz	500 Hz	1000 Hz	2000 Hz	4000 Hz
1000-50 cfm Device	800 cfm @ 0.6" wc	63	55	52	54	50	49
	200 cfm @ 0.6" wc	46	42	38	37	32	25
	800 cfm @ 3.0" wc	73	70	64	66	65	60
	200 cfm @ 3.0" wc	51	52	51	50	52	51
1500-100 cfm Device	1200 cfm @ 0.6" wc	65	58	53	56	52	52
	400 cfm @ 0.6" wc	50	45	38	39	37	31
	1200 cfm @ 3.0" wc	72	70	62	65	64	60
	400 cfm @ 3.0" wc	55	57	55	53	56	55
3000-200 cfm Device	2400 cfm @ 0.6" wc	63	56	55	58	54	55
	800 cfm @ 0.6" wc	51	45	41	42	39	34
	2400 cfm @ 3.0" wc	75	71	65	68	67	63
	800 cfm @ 3.0" wc	58	58	56	56	59	58

Table 2. Supply Airflow Control Device Sound Power Level (Discharge)

		Discharge Sound Power Level in dB (re: 10(-12) watts)					
Octave Band Number		2	3	4	5	6	7
Center Frequency in Hz		125 Hz	250 Hz	500 Hz	1000 Hz	2000 Hz	4000 Hz
1000-50 cfm Device	800 cfm @ 0.6" wc	62	57	54	58	54	51
	200 cfm @ 0.6" wc	45	46	42	44	40	34
	800 cfm @ 3.0" wc	72	71	67	75	72	68
	200 cfm @ 3.0" wc	53	56	54	58	56	54

		Discharge Sound Power Level in dB (re: 10(-12) watts)					
Octave Band Number		2	3	4	5	6	7
Center Frequency in Hz		125 Hz	250 Hz	500 Hz	1000 Hz	2000 Hz	4000 Hz
1500-100 cfm Device	1200 cfm @ 0.6" wc	63	59	55	60	54	53
	400 cfm @ 0.6" wc	53	49	44	49	45	39
	1200 cfm @ 3.0" wc	72	73	69	77	72	68
	400 cfm @ 3.0" wc	58	63	61	63	60	57
3000-200 cfm Device	2400 cfm @ 0.6" wc	64	60	58	63	56	56
	800 cfm @ 0.6" wc	52	48	47	52	46	41
	2400 cfm @ 3.0" wc	75	75	72	78	73	70
	800 cfm @ 3.0" wc	59	62	62	66	62	60

Table 3. Supply Airflow Control Device Sound Power Level (Radiated)

		Radiated Sound Power Level dB (re: 10-12 watts)					
Octave Band Number		2	3	4	5	6	7
Center Frequency in Hz		125 Hz	250 Hz	500 Hz	1000 Hz	2000 Hz	4000 Hz
1000-50 cfm Device	800 cfm @ 0.6" wc	44	41	45	41	36	34
	200 cfm @ 0.6" wc	33	28	31	29	26	20
	800 cfm @ 3.0" wc	53	53	56	57	55	53
	200 cfm @ 3.0" wc	41	38	41	39	39	37
1500-100 cfm Device	1200 cfm @ 0.6" wc	47	53	40	42	38	36
	400 cfm @ 0.6" wc	35	39	31	34	33	26
	1200 cfm @ 3.0" wc	52	60	54	60	59	53
	400 cfm @ 3.0" wc	42	44	43	46	46	42
3000-200 cfm Device	2400 cfm @ 0.6" wc	58	56	45	47	43	42
	800 cfm @ 0.6" wc	45	43	36	39	37	29
	2400 cfm @ 3.0" wc	69	68	60	65	63	57
	800 cfm @ 3.0" wc	54	53	48	51	50	48

2.6 EXHAUST AND SUPPLY AIRFLOW DIGITAL CONTROLLER

A. The airflow control device shall be a microprocessor-based design and, shall use closed loop control to lineary regulate airflow based on a digital control signal. The device shall generate a digital feedback signal that represents its airflow.

B. The airflow control device shall store its control algorithms in non-volatile, re-writable memory. The device shall be able to stand alone or to be networked with other room level digital airflow control devices using an industry standard protocol.

C. Room-level control functions shall be embedded in and carried out by the airflow device controller using a distributed control architecture. Critical control functions shall be implemented locally, no room level controller shall be required.

D. The airflow control device shall use industry standard 24 VAC power and provided with required step down transformers.

E. The airflow control device shall have provisions to connect a notebook PC commissioning tool and every node on the network shall be accessible from any point in the system.

F. The airflow control device shall have built-integral Input/Output connections address fume hood control, temperature control, occupancy control, emergency control and non-network sensors switches and control devices. At a minimum the airflow controller shall have:

1. Three (3) universal inputs, capable of accepting 0 to 10Vdc, 4 to 20mA, 0 to 65k ohms, or type 2 or type 3 10k ohm @ 25 degree C thermistor temperature sensors.
2. One (1) digital input capable of accepting a dry contact or logic level signal input.
3. Two (2) analog outputs capable of developing either a 0 to 10Vdc, or 4 to 20mA linear control signal.
4. One (1) Form C (SPDT) relay output capable of driving up to 1A @ 24 Vac/Vdc.

G. The airflow control device shall meet FCC part 15 subpart J class A, and be UL916 listed.

2.7 LABORATORY CONTROL UNIT

A. A laboratory control unit shall be supplied to control the airflow balance of the laboratory room and any auxiliary air fume hoods. As a minimum, provided one complete, stand-alone laboratory control unit per fume hood laboratory. The Laboratory control unit shall be the same manufacturer as the exhaust and supply airflow controllers.

1. The control unit shall be of electronic design with (analog/digital) signal inputs and outputs. The inputs shall accept signals proportional to fume hood exhaust general exhaust and supply and/or auxiliary airflows. The output signals shall control supply valves, general exhaust air valves, and fume hood volumes.

2. The control unit shall maintain a constant, adjustable offset between the sum of the room's total exhaust and the make-up/supply air volumes. This offset shall be independent of the exhaust volume magnitude and represent the volume of air that will enter (or exit) the room from the corridor or other room.

3. The control unit shall generate appropriate analog/digital signals linearly proportional to all airflow sources, sash sensors, and flow alarms. The signals shall be available for hard wired connection to the facility's direct digital control (DDC) system, or through an integrated control unit that interfaces directly into the facility's DDC system. As a minimum, the following signals (points), shall be available:

a. Fume hood exhaust flow
b. Fume hood exhaust low flow alarm
c. Supply/make-up airflow

d. General exhaust flow
e. Total lab exhaust flow
f. Total lab supply flow
g. Room offset
h. Emergency override alarm
i. Fume hood set-up mode
j. Stand-by/occupied fume hood status
k. Refer to Matrix schedule in the listed specification or other requirements.

B. All points, whether hard wired or totally integrated via one DDC laboratory control unit, shall be stored in the respective DDC system for the capability of trending, archiving, graphics, alarm notification, and status reports. Laboratory system performance (speed, stability, and accuracy) shall be guaranteed regardless of the quantity of points being monitored, processed, or controlled. Multiple laboratory control units shall be provided to insure at all times the performance of the laboratory is being maintained.

C. An integral or wall-mounted power supply or step down transformers shall be included to power the complete laboratory airflow control system from one dedicated 120 VAC line connection.

2.8 CONTROL ARCHITECTURE:

A. Control Architecture shall control the supply and/or exhaust airflow control devices to maintain proper room pressurization polarity (positive or negative). Each individual laboratory with fume hoods shall have dedicated control.

B. The control shall be a microprocessor based digital controller. It shall control and communicate digitally with up to thirty-one digital fume hood, canopy, snorkel, biosafety cabinet, general exhaust, makeup, and laboratory office airflow control devices within a particular pressurization zone.

C. The control shall maintain a constant design offset between the sum of the room's total exhaust and makeup/supply airflows. This offset shall be field adjustable and represents the volume of air which will enter (or exit) the room from the corridor or adjacent spaces.

D. All points shall be available through the interface to the building management system (BMS) for trending, archiving, graphics, alarm notification, and status reports. Laboratory airflow control system performance (speed, stability, and accuracy) shall be unaffected by the quantity of points being monitored, processed, or controlled.

E. Refer to the BMS specification for the required input/output summary for the necessary points to be monitored and/or controlled.

F. The control shall have the capability for full stand-alone operation; it shall also be capable of communicating digitally, with up 100 sub-nets over the high-speed, building-wide digital laboratory network furnished by the laboratory control system supplier installed by electrical.

G. The control shall provide a port for connecting a notebook computer, desktop computer,

modem, or alarm printer.

H. The control shall accommodate universal modules to address temperature control and non-network sensors.

I. See ATC point Matrix for additional required points reporting and alarming to the ATC system.

2.9 EXHAUST AND SUPPLY AIRFLOW CONTROL DEVICE WITH PEER TO PEER ARCHITECURE

A. The airflow control device shall use closed loop control to linearly regulate airflow based on a digital control signal. The device shall generate a digital feed-back signal that represents its airflow.

B. The airflow control device shall store its control algorithms in non-volatile, re-writable memory. The device shall be able to stand alone or be able to network with other room level digital airflow control devices over a 375k baud network.

C. The airflow control device shall use industry standard 24 vac power with required step down transformers.

1. The airflow control device shall have a local port for connection to a notebook PC commissioning tool.
2. The airflow control device shall accommodate a universal point expansion module to address fume hood control, temperature control, and non-network sensors.
3. The airflow control device shall meet FCC Part 15 Subpart J Class A, and be UL916 listed.

2.10 TWO-POSITION EXHAUST AIRFLOW CONTROL DEVICE

A. The airflow control device shall maintain a factory calibrated fixed maximum and minimum flow setpoint based on an electronic digital signal. Two-position devices requiring feedback shall generate a 0 to 10 volt feedback signal that is linearly proportional to its airflow. All two position devices shall either be networked, or hard-wired into the room level network so as to be considered under pressurization control.

2.11 INTERFACE TO BUILDING MANAGEMENT SYSTEMS

A. The laboratory airflow control system network shall have the capability of digitally interfacing with the BMS. The required software interface drivers shall be developed and housed in a server , a dedicated interface device furnished by the laboratory airflow control system supplier.

B. Any or all room-level points shall be available to the BMS for monitoring or trending. The server shall maintain a cache of all points to be monitored by the BMS. The room-level airflow control devices shall update this cache continually.

PART 3 - EXECUTION

3.1 INSTALLATION

A. The ATC Contractor shall install an appropriately sized and fused 24 Vac transformer with disconnect switch suitable for NEC Class II wiring for all control, network and electrically actuated air valves as required.

B. All cable shall be furnished and installed by the ATC Contractor. The ATC Contractor shall terminate and connect all cables as required.

C. The Mechanical Contractor shall install all airflow control devices in the ductwork and shall connect all airflow control valve linkages.

D. The Mechanical Contractor shall provide and install all reheat coils, duct transitions and piping arrangements.

E. The Mechanical Contractor shall provide and install insulation as required.

3.2 SYSTEM START-UP AND TRAINING

A. System start-up shall be provided by factory authorized representative of the laboratory airflow control system manufacturer. Start-up shall include calibrating the fume hood monitor and any combination sash sensing equipment as required. Start-up shall also provide electronic verification of airflow (fume hood exhaust, supply, make-up, general exhaust, or return), system programming and integration to BMS (when applicable).

B. The balancing contractor shall be responsible for final verification and reporting of all airflows.

C. The laboratory airflow control system supplier shall furnish a minimum of **sixteen** hours of owner training by factory trained and certified personnel. The training will provide an overview of the job specific airflow control components, verification of initial fume hood monitor calibration, general procedures for verifying airflows of air valves, and general troubleshooting procedures.

D. Operation and Maintenance manuals, including as-built wiring diagrams and component lists shall be provided for each training attendee.

END OF SECTION

SECTION 23 3700 – REGISTERS, GRILLES AND DIFFUSERS

PART 1 - GENERAL

1.1 RELATED DOCUMENTS

A. Drawings and general provisions of the Contract, including General and Supplementary Conditions, Section 230500 and other Division 1 Specification Sections, apply to this Section.

B. LEED Building General Requirements: The Owner requires the Contractor to implement practices and procedures to meet the project's environmental performance goals, which include achieving LEED Certification. Specific project goals that may impact this area of work include: Use of recycled-content materials; use of locally-manufactured materials; use of low-emitting materials; construction waste recycling; and the implementation of a construction indoor air quality management plan. The Contractor shall ensure that the requirements related to these goals, as defined in the sections below, are implemented to the fullest extent. Substitutions, or other changes to the work proposed by the Contractor or their Subcontractors, shall not be allowed if such changes compromise the stated LEED Building Performance Criteria.

1. Comply with LEED (Leadership in Energy and Environmental Design) Green Building Rating System BD+C, Version 3.

1.2 WORK INCLUDED

A. Furnish and install all registers, grilles and diffusers including opposed blade dampers, frames and other accessories to make a complete system of air distribution.

B. All materials shall be new and manufactured for the specific purpose of distributing and controlling air flow.

1.3 RELATED SECTIONS

A. Examine all drawings and criteria sheets and all other Sections of the Specifications for requirements which affect work under this Section whether or not such work is specifically mentioned in this Section.

B. Section 017419 "Construction Waste Management and Disposal" for requirements related to construction waste management and disposal at the project site.

C. Section 018113 "VOC Limits for Adhesives, Sealants, Paints and Coatings" for restrictions of VOC in adhesives, sealants, paints and coatings.

D. Section 018119 "Construction Indoor Air Quality (IAQ) Management" for requirements during construction for indoor-air-quality management.

1.4 REFERENCES

A. Applicable provisions of the following Codes and Trade Standard Publications shall apply to the work of this Section, and are hereby incorporated into, and made a part of the Contract Documents.

B. Material standards shall be as specified or detailed hereinafter and as following:

1. ADC 1062: GRD – Test Code for Grilles, Registers and Diffusers; 1984.
2. AMCA 500 – Test Method for Louvers, Dampers and Shutters; 1989.
3. ASHRAE 70 – Method of Testing for Rating the Air Flow Performance of Outlets and Inlets.
4. NFPA 90A – Installation of Air Conditioning and Ventilating Systems; 1993.
5. SMACNA (DCS) – HVAC Duct Construction Standard – metal and Flexible; 1995.

1.5 SUBMITTALS

A. See Section 230500 and General Conditions for additional requirements.

B. Product Data: Provide data for equipment required for this project. Review outlets and inlets as to size, finish and type of mounting prior to submission. Submit schedule of outlets and inlets showing type, size, location, application and noise level.

C. Project Record Documents: Record actual locations of air outlets and inlets.

D. Submit air terminal performance data including static pressure, throw, velocity, airflow and acoustical performance. Data must indicate compliance with referenced Codes and Standards specified herein.

E. Manufacturer shall review requirements of outlets as to size, finish and type of mounting before submitting shop drawings and schedule of outlets.

F. Manufacturer shall check location of outlets and make necessary adjustments in position to conform with architectural features, symmetry and lighting arrangement before submitting shop drawings.

1.6 QUALITY ASSURANCE

A. Manufacturer shall certify cataloged performance and ensure correct application of air outlet types.

B. Manufacturer shall be responsible for examining application of each outlet and shall guarantee that each will provide comfortable space conditions without drafts at noted capacity.

PART 2 - PRODUCTS

2.1 GENERAL

A. Acceptable manufacturers contingent on compliance with specifications.

1. Anemostat
2. Krueger
3. Tuttle & Bailey
4. MetalAire
5. Price
6. Nailor
7. Titus

B. All air distribution devices shall be of steel or aluminum construction unless otherwise specified herein or scheduled on the drawings.

C. Distribution devices, except where such devices are specified or scheduled to be steel extruded aluminum, shall be factory primed and finish painted by the manufacturer in a color as approved by the Architect during shop drawing review, unless otherwise noted.

D. **All diffusers, grilles and registers must be compatible with the designed ceiling/wall type. Refer to architectural drawings for exact details of ceiling/wall construction.**

2.2 DIFFUSERS, REGISTERS AND GRILLES SHALL BE OF TYPE AS HEREIN SPECIFIED

Designation	Service	Air Pattern
A	Supply	1-way
B	Supply	2-way (90°)
C	Supply	2-way (180°)
D	Supply	3-way
E	Supply	4-way
F	Return/Exhaust	---
G	Sidewall Supply	---
H	Low Wall Return/Exhaust	---
K	Linear Supply	---
L	Displacement Supply	---
M	Displacement Supply	---
N	Displacement Supply	---
P	Displacement Supply	---
Q	Linear Slot	---
R	Lab Supply	1-way
S	Lab Supply	2-way (90°)
T	Lab Supply	2-way (180°)
U	Lab Supply	3-way
V	Lab Supply	4-way
W	Lab Return/Exhaust	---
Y	Radial Pattern Supply	Low Velocity

A. Types A, B, C, D and E (Ceiling Supply)

1. Ceiling or sidewall supply air diffusers of the above types shall be of the architectural plaque type, similar to Price SPD.

2. Where louver sections abut core frame, the louver ends shall be welded to core frame. The louver ends shall be rounded and hemmed before welding to core frames.

3. Diffusers shall be square or rectangular, as shown on the drawings. Diffusers shall be assembled in patterns which provide 1-way, 2-way, 3-way or 4-way air discharge with each side delivering a quantity of air proportional to the area served. Diffusers shall be fabricated of steel welded or aluminum construction. The diffusers shall be provided with a removable core permitting easy access to the neck connection.

4. The diffusers shall be constructed with an integral collar extending at least 1" above the core **to accommodate an internal duct connection**. Collar corners shall have welded angles on the outside to prevent leakage and ensure that internal duct connection can be made secure.

B. Type F (Return and Exhaust)

1. General return/exhaust registers shall be similar to Price Model SPD and shall be made of steel or aluminum. Provide with countersunk holes and suitable frame to match ceiling or wall construction.

2. All return and exhaust registers installed in all toilet rooms, laundry rooms, showers and other areas subject to moisture shall be similar to above except constructed of all aluminum, equal to Price Model SPD.

C. Type G (Sidewall Adjustable Supply)

1. Sidewall supply registers shall be similar to Price Model 530 and shall be made of steel or aluminum, with mitered corners, double adjustable deflection core, and horizontal front louvers. Frames shall be suitable for construction adjacent to where registers are to be installed. Registers shall have countersunk screw holes.

D. Type H (Low Wall Return/Exhaust)

1. Low wall return/exhaust registers shall be similar to above except frame and blade shall be manufactured of heavy gauge steel or extruded aluminum (minimum thickness 12 gauge) for rugged use similar to Price Model 530.

E. Type K (Linear Supply and Return)

1. Veined supply and return diffusers shall be similar to Price Model LV.

2. Linear diffusers shall be of the multi-orifice, quick diffusing type. Diffusers shall be so designed that the air will be discharged at a uniform velocity through all orifices. Airstreams shall be discharged at counter angles to create turbulence within the primary airstream and thus achieve rapid mixing of primary and room air. The diffuser efficiency must be such that the initial temperature differential shall be reduced by 50% at a distance 1'-0" from the point of discharge. Slotted elements of the grilled type lacking diffusing elements and mixing characteristics will not be acceptable.

3. Stripline borders and frames shall be of extruded aluminum. Diffusing vane sections shall be of drawn and stamped aluminum shapes.

4. Diffuser shall be equipped with matching extruded frame to suit the adjacent construction where applicable. Means shall be provided for attaching diffuser to plaster frame with safety spring locks. No screwholes shall be visible on plaster frames or stripline.

5. Finish shall be electro-plated off-white enamel or as indicated on the drawings.

F. Type L, M, N (One Way Displacement Supply)

1. The 1-way flat faced recessed displacement diffuser shall be similar to Price model DF1R. Provide sizes and capacities indicated on the drawings.

2. The 1-way flat faced recessed displacement diffuser shall be constructed with an equalization baffle behind the operative diffuser face for uniform, low velocity, distribution of supply air. There shall be no visible fasteners in the front or side panels. The operative face shall be constructed of painted high-gauge steel. The internal baffling elements shall be constructed of aluminum. The paint shall be powder coat polyester. Epoxies and their derivatives are unacceptable. Visible non-metallic elements are unacceptable. The diffuser shall be supplied with a frame that installs in the opening and accepts the diffuser face installation clips for a fully concealed installation.

3. Air shall be delivered to the space at low noise levels and low velocities that are even across the diffuser face, in all ducting configurations.

4. Diffuser Manufacturer shall provide sound and pressure drop data derived from tests in accordance with ASHRAE standard 70-1991.

G. Type P (Lay-In Displacement Supply)

1. Lay-in supply air displacement diffuser shall be similar to Price model DF1L. Provide sizes and capacities indicated on the drawings.

2. The 1-Way flat faced Lay-in displacement diffuser shall be constructed with an equalization baffle behind the operative diffuser face for uniform, low velocity, distribution of supply air. Both the equalization baffle and face shall be securely retained in the diffuser frame. The diffuser frame shall be constructed of rolled

steel for rigidity and protection of the operative face. The operative face shall be constructed of painted high-gauge steel, the wall plenum may be satin coat steel. The internal baffling elements shall be constructed of aluminum. The paint shall be powder coat polyester. Epoxies and their derivatives are unacceptable. Visible non-metallic components are unacceptable.

3. Air shall be delivered to the space at low noise levels and low velocities that are even across the diffuser face, in all ducting configurations.

4. Diffuser manufacturer shall provide sound and pressure drop data derived from tests in accordance with ASHRAE standard 70- 1991.

H. Type Q (Linear Slot)

1. Provide all materials and equipment required for a complete installation of all linear and modular slot air distribution systems as shown on the architectural and mechanical drawings and/or indicated in the architectural or mechanical specifications. The systems shall be complete in every respect and shall include all required appurtenances. Mechanical contractor shall furnish and install all plenums, hoods, blank-offs and associated sheet metal components including all duct connections thereto.

2. Linear slot air devices shall be similar to Titus Flow Bar, Air Factors or Price.

3. Provide all continuous linear slot and modular slot diffusers as shown on the drawings. The slot diffusers shall integrate into the ceiling system. Where curved linear slot diffusers are indicated, they shall be stretched formed to the exact radii required. Rolled or segmented linear slot diffusers will not be accepted.

4. The linear slot diffusers shall have a single slot unless shown otherwise and shall be capable of being used for supply air, return air, exhaust air or any combination thereof.

5. The linear slot diffusers shall be capable of supporting the ceiling system. Linear diffusers supported by screws in the flanges or from air plenums are unacceptable. For lay-in ceiling, provide hanger wire support clips that are integral with the linear slot diffusers allowing the linear slot diffusers to be supported from the building structure with ceiling wire. For hard ceilings, provide clips that are integral with the linear slot diffusers allowing the diffusers to be secured directly to the ceiling framing without the requirement for hanger supports. Provide spline clips to secure joints and ceiling tees to the diffusers.

6. Provide ends and corners as required. Ends shall be butt type, field installed, or mitered picture frame type factory installed, as indicated herein or shown on the drawings. Corners shall be mitered one piece unit.

7. Pattern controllers shall be one piece extruded aluminum, 24 inches long maximum, positioned between spring loaded spacers. Pattern controllers shall allow the airstream to be directed flat against the ceiling in either direction or

downward as well as allowing throw reduction every two feet along the entire length of the linear slot diffusers. The airstream shall be maintained at the ceiling plane and shall not dump when volume is reduced. Only extruded aluminum pattern controllers are acceptable. Where shown or noted pattern controllers shall be designed to allow the airstream to be jetted into the occupied space and be adjustable to vector the airstream as required.

8. Material shall be minimum wall thickness 0.062 inches extruded aluminum. Spring steel retainers shall be used under the spacers to hold the slot diffusers assembly tightly together and allow the slot diffusers to be disassembled easily for field trimming. Materials other than extruded aluminum and spring steel will not be accepted.

9. Flanges exposed to view shall be painted factory standard white. All other surfaces shall be painted flat black. Provide paint samples if requested.

10. Plenums shall be minimum 24-gauge galvanized steel and lined inside with black matte fiberglass insulation. Hoods shall be 51 percent free area and constructed of 24-gauge perforated sheet metal painted flat black.

11. Air test and balance of linear and modular slot diffusers systems shall be by Division 23 and be in accordance with the testing and balancing portion section of the specifications. Position all pattern controllers in their normal operation positions and perform all air testing and balancing of all slot diffuser systems in full accordance with manufacturer's recommendations.

12. All slot diffusers shall be performance tested with air plenums as a composite assembly in full accordance with ASHRAE, and/or ARI standards.

13. Diffusers shall be selected to achieve a throw to room length ratio which meets the requirements of the ASHRAE 2001 Fundamentals Handbook, Chapter 32, Table 4, at both maximum design flow rate, and for VAV systems, at the minimum flow rate expected during partial occupancy. Diffusers shall be selected to achieve a minimum of 70 percent ADPI over the range of expected loads in the space. The diffusers' reported performance shall be based on tests conducted in accordance with ASHRAE Standard 70–2006. ADPI performance on at least one unit size of the selected diffuser shall have been tested in accordance with ASHRAE Standard 113–1990, to validate conformance and applicability to the ASHRAE table.

I. Types R, S, T, U and V (Ceiling Supply)

1. Ceiling or sidewall supply air diffusers of the above types shall be of the restricted multi-orifice jet induction and air mixing type, consisting of louvered sections with built-in diffusing vanes, similar to Price Type SMX.

2. The vanes shall be arranged to discharge air from adjacent channels at a 45° angle in opposite directions to the plane of discharge to ensure rapid mixing of primary and room air. Each individual diffusing vane shall be welded in (2)

places to the adjacent louver sections to make a rigid integral unit. The vanes shall extend to the discharge edges of the louvers.

3. Where louver sections abut core frame, the louver ends shall be welded to core frame. The louver ends shall be rounded and hemmed before welding to core frames.

4. Diffusers shall be square or rectangular, as shown on the drawings. Diffusers shall be assembled in patterns which provide 1-way, 2-way, 3-way or 4-way air discharge with each side delivering a quantity of air proportional to the area served. Diffusers shall be fabricated of steel welded or aluminum construction. The diffusers shall be provided with a removable core permitting easy access to the neck connection.

5. The diffusers shall be constructed with an integral collar extending at least 1" above the core **to accommodate an internal duct connection**. Collar corners shall have welded angles on the outside to prevent leakage and ensure that internal duct connection can be made secure.

J. Type W (Return and Exhaust)

1. General return/exhaust registers shall be similar to Price Model 530 and shall be made of steel or aluminum with (1) set of fixed blades, 42° deflection. Provide with countersunk holes and suitable frame to match ceiling or wall construction.

2. All return and exhaust registers installed in all toilet rooms, laundry rooms, showers and other areas subject to moisture shall be similar to above except constructed of all aluminum, equal to Price Model 630.

K. Type Y (Radial Pattern Supply)

1. High volume ceiling diffusers shall be the perforated, radial type with directional blades equal to Price Model FRFDP.

2. The air diffusers shall provide a non-aspirating, low velocity radial air pattern, projecting air horizontally, vertically, and all directions in between to provide radial displacement of air for optimum ventilation of the space. The unit shall be configured with an (air supply plenum) to provide a uniform discharge velocity over the face of the unit.

3. The diffuser shall be Aluminum or steel with baked on British White paint or stainless steel with brushed finish.

4. The diffuser shall be capable of increasing the space particle removal rate, three (3) times over laminar flow diffusers without increasing the supply air quantity, as determined by tests using Laser Particle Count Technology.

5. The diffuser shall meet the following performance criteria: The air diffuser shall be tested for Sound Generation and Pressure Drop in accordance with the ADC

GRD 1062-84. Room air velocities shall be determined in accordance with ASHRA Std. 113-87.

6. Provide for each diffuser, where required, a distribution plenum with internal spreading means and an inlet collar.

7. The diffuser shall have flow measuring taps for ease of balancing.

8. Diffuser shall be installable side by side while allowing access to release mechanism.

9. Provide flow measuring and balancing data.

10. Provide safety chain or latch.

L. Air Screens/Wire Mesh

1. Mesh shall be 3/4" square pattern, 1/16" galvanized wire, interwoven, welded or secured to frame.

2. Frames shall be 1" by 1" by 1/8" galvanized steel angles for duct sizes through 24"; 1 1/2" x 3/16" for duct sizes between 25" and 48"; and, 2" by 2" by 3/16" for ducts larger than 48", continuous around perimeter of screen.

PART 3 - INSTALLATION

3.1 INSTALLATION

A. Install in accordance with manufacturer's instruction.

B. Check location of outlets and inlets and make necessary adjustments in position to conform with architectural features, symmetry and lighting arrangement.

C. Install diffusers to ductwork with air tight connections.

D. Provide balancing dampers on duct take-off to diffusers, and grilles and registers, despite whether dampers are specified as part of the diffuser, or grille and register assembly.

E. Paint ductwork visible behind air outlets and inlets matte black.

END OF SECTION

SECTION 23 3723 – ROOF ACCESSORIES

PART 1 - GENERAL

1.1 RELATED DOCUMENTS

A. Drawings and general provisions of the Contract, including General and Supplementary Conditions, Section 230500 and other Division 1 Specification Sections, apply to this Section.

B. LEED Building General Requirements: The Owner requires the Contractor to implement practices and procedures to meet the project's environmental performance goals, which include achieving LEED Certification. Specific project goals that may impact this area of work include: Use of recycled-content materials; use of locally-manufactured materials; use of low-emitting materials; construction waste recycling; and the implementation of a construction indoor air quality management plan. The Contractor shall ensure that the requirements related to these goals, as defined in the sections below, are implemented to the fullest extent. Substitutions, or other changes to the work proposed by the Contractor or their Subcontractors, shall not be allowed if such changes compromise the stated LEED Building Performance Criteria.

1. Comply with LEED (Leadership in Energy and Environmental Design) Green Building Rating System BD+C, Version 3.

1.2 WORK INCLUDED

A. Furnish and install a complete system of roof curbs, air intake/exhaust houses, including accessories, at all areas indicated on the contract drawings.

1.3 RELATED SECTIONS

A. Examine all drawings and criteria sheets and all other Sections of the Specifications for requirements which affect work under this Section whether or not such work is specifically mentioned in this Section.

B. Section 017419 "Construction Waste Management and Disposal" for requirements related to construction waste management and disposal at the project site.

C. Section 018113 "VOC Limits for Adhesives, Sealants, Paints and Coatings" for restrictions of VOC in adhesives, sealants, paints and coatings.

D. Section 018119 "Construction Indoor Air Quality (IAQ) Management" for requirements during construction for indoor-air-quality management.

1.4 REFERENCES

A. Applicable provisions of the following Codes and Trade Standard Publications shall apply to the work of this Section, and are hereby incorporated into, and made a part of the Contract Documents.

B. Material standards shall be as specified or detailed hereinafter and as follows:

1. ASTM A 36/A 36M – Standard Specification for Carbon Structural Steel; 1994.

2. ASTM A 366/A 366M – Standard Specification for Steel, Sheet, Carbon, Cold Rolled, Commercial Quality; 1991.

3. ASTM A 569/A 569M – Standard Specification for Steel, Carbon (0.15 Maximum, Percent), Hot-Rolled Sheet and Strip, Commercial Quality.

4. ASTM A 653/A 653M – Standard Specification for Steel Sheets, Zinc-Coated (Galvanized) or Zinc-Iron Alloy-Coated (Galvannealed) by the Hot Dip Process.

5. ASTM A 666 – Standard Specification for Austenitic Stainless Steel Sheet, Strip, Plate, and Flat Bar.

6. ASTM B 209 – Standard Specification for Aluminum and Aluminum-Alloy Sheet and Plate.

7. ASTM B 209M – Standard Specification for Aluminum and Aluminum-Alloy Sheet and Plate (Metric).

8. NFPA 90A – Installation of Air Conditioning and Ventilating Systems.

9. NFPA 90B – Installation of Warm Air Heating and Air Conditioning Systems.

10. NFPA 96 – Installation of Equipment for the Removal of Smoke and Grease-laden Vapors from Commercial Cooking Equipment.

11. SMACNA (DCS) – HVAC Duct Construction Standards – Metal and Flexible.

12. UL 181 – Factory-Made Air Ducts and Connectors.

1.5 SUBMITTALS

A. See Section 230500 and General Conditions for additional requirements.

B. Product Data: Provide data for materials and products.

C. Prepare and submit scaled manufacturer's drawings.

D. Manufacturer's Installation Instructions.

1.6 QUALITY ASSURANCE

A. Manufacturer shall have adequate experience of building products of the types required for this project.

PART 2 - PRODUCTS

2.1 GENERAL

A. Acceptable Manufacturers subject to compliance with the specification:

1. Roof Curbs:

a. Loren Cook Co.
b. Construction Specialties
c. Greenheck

2. Louvered exhaust and supply Houses:

a. Loren Cook Co.
b. Construction Specialties
c. Greenheck

2.2 ROOF CURBS

A. General

1. Provide roof curbs for sheet metal duct penetration roof mounted fans, gravity intake, exhaust and relief hoods of types and sizes as shown on the drawings and as hereinafter specified. Roof curbs shall be as manufactured by the approved fan or hood manufacturer.

2. Refer to other Sections of this specification and Section 230500 for General Requirements and Conditions.

3. Roof curbs shall be suitable for field flashing by the Contractor.

B. Materials

1. Roof Curbs (Other than kitchen cooking hood exhaust)

a. Roof curbs shall be prefabricated, acoustical type, constructed of 16-gauge aluminum, preinsulated with insulation protected from erosion.

2. Kitchen Cooking Hood Exhaust Roof Curbs

a. Roof curbs for kitchen cooking hood exhaust shall be 24" high, constructed of 14 gauge welded galvanized steel, insulated with metal liner, and shall be constructed in accordance with UL 762 and NFPA 96.

2.3 LOUVERED EXHAUST AND SUPPLY ROOF HOUSES.

A. General

1. Provide aluminum intake, exhaust, and/or relief hoods of types and sizes as shown and or scheduled on the drawings.

2. Hoods shall be provided with roof curb by same manufacturer.

B. Materials

1. Each ventilator must be rated for 100 mph wind load and 101.5 lbs./sq.ft. snow load.

2. Unit base to be minimum 0.080 gauge.

3. Furnish 1/2" thick sprayed-on plastic coating to eliminate condensation of underside of roof.

4. Intake ventilator to be 200% free area of connected ductwork or roof opening.

5. Relief vent to be 150% free area of connected ductwork or roof opening.

6. All seams to be continuously welded. Equip all ventilators with aluminum bird screen.

PART 3 - EXECUTION

3.1 INSTALLATION

A. The drawings shall be followed where they are definite and provided such procedures do not cause objectionable conditions for equipment provided installed under this Contract. The drawings are intended to indicate the sizes of curbs, intake/exhaust houses and if certain sizes are omitted or unclear, obtain additional information before proceeding.

B. Locate and size all openings for ductwork in the building construction. Provide all sleeves as hereinbefore specified.

C. The installation shall be done under the direct supervision of the manufacturer.

D. Duct connections to equipment shall be in no case smaller than the equipment openings.

E. Install all UL classified devices in accordance with their UL approved installation sheets.

3.2 ROOF CURB INSTALLATION

A. The roof curbs shall be installed in accordance with the manufacturer recommendations, Contract Drawings, and reviewed submittals.

B. Roof curbs for kitchen cooking hood exhaust shall also be installed in accordance with UL 762 and NFPA 96.

3.3 GRAVITY INTAKE, EXHAUST AND RELIEF ROOF HOUSE INSTALLATION

A. The gravity intake, exhaust and relief hoods shall be installed in accordance with the manufacturer recommendations, Contract Drawings, and reviewed submittals.

END OF SECTION

SECTION 23 3900 – FANS AND ACCESSORIES

PART 1 - GENERAL

1.1 RELATED DOCUMENTS

A. Drawings and general provisions of the Contract, including General and Supplementary Conditions, Section 230500 and other Division 1 Specification Sections, apply to this Section.

B. LEED Building General Requirements: The Owner requires the Contractor to implement practices and procedures to meet the project's environmental performance goals, which include achieving LEED Certification. Specific project goals that may impact this area of work include: Use of recycled-content materials; use of locally-manufactured materials; use of low-emitting materials; construction waste recycling; and the implementation of a construction indoor air quality management plan. The Contractor shall ensure that the requirements related to these goals, as defined in the sections below, are implemented to the fullest extent. Substitutions, or other changes to the work proposed by the Contractor or their Subcontractors, shall not be allowed if such changes compromise the stated LEED Building Performance Criteria.

1. Comply with LEED (Leadership in Energy and Environmental Design) Green Building Rating System BD+C, Version 3.

1.2 WORK INCLUDED

A. Furnish and install all fans of the various types, arrangement and sizes specified herein and as scheduled on the drawings.

B. Fans shall include all motors, drives, curbs, flashing, special coatings and accessories.

C. Furnish and install backdraft dampers with all fans.

D. Furnish and install all roof curbs and automatic dampers.

1.3 RELATED SECTIONS

A. Examine all drawings and criteria sheets and all other Sections of the Specifications for requirements which affect work under this Section whether or not such work is specifically mentioned in this Section.

B. Section 017419 "Construction Waste Management and Disposal" for requirements related to construction waste management and disposal at the project site.

C. Section 018113 "VOC Limits for Adhesives, Sealants, Paints and Coatings" for restrictions of VOC in adhesives, sealants, paints and coatings.

D. Section 018119 “Construction Indoor Air Quality (IAQ) Management” for requirements during construction for indoor-air-quality management.

1.4 REFERENCES

A. Applicable provisions of the following Codes and Trade Standard Publications shall apply to the work of this Section, and are hereby incorporated into, and made a part of the Contract Documents.

B. Material standards shall be as specified or detailed hereinafter and as following:

1. AMCA 99 – Standards Handbook;.

2. AMCA 210 – Laboratory Methods of Testing Fans for Rating Purposes.

3. AMCA 261 – Directory of Products Licensed to Bear the AMCA Certified Ratings Seal;.

4. AMCA 260 – Laboratory Certified ratings for induced flow fans.

5. AMCA 300 – Test Code for Sound Rating Air Moving Devices;.

6. AMCA 301 – Method of Publishing Sound Rating Air Moving Devices;.

7. NEMA MG 1 – Motors and Generators; 1993 (and Revision 1).

8. NFPA 96 – Installation of Equipment for the Removal of Smoke and Grease Vapors from Commercial Cooking Equipment;.

9. UL 705 – Power Ventilators;.

1.5 SUBMITTALS

A. See Section 230500 and General Conditions for additional requirements.

B. Submit certified curves showing fan performance with system operating points plotted on curves.

C. Submit motor data sheets including motor efficiency and power factor at various loadings of nameplate horsepower. Motor efficiency and power factor shall be shown for 100%, 75% and 50% of nameplate horsepower. Submit data on efficiency and power factor required for motors 1 HP and above only. Motors shall have premium efficiency motors with minimum efficiency on motors listed in specification.

D. Submit bearing sizing calculations for each similar size and type of fan. Fan bearing calculations shall be based on fan at maximum operating conditions including belt pull. Calculations shall be done for both fan bearings and motor bearings. Calculations required on centrifugal fans, vent sets in-line fans, wall mounted propeller fans and vane axial fans only.

E. Submit sound power levels for each size and type of fan. Sound levels shall be in all (8) octave bands for discharge of fan, inlet to fan, and radiated noise through casing.

F. Submit certified shop drawings indicating all dimensional data, and operating and maintenance clearances.

1.6 QUALITY ASSURANCE

A. Fans shall conform to most recent AMCA Bulletins regarding construction and testing. Fans shall be tested and rated per AMCA and shall be selected in proper operating range without motor overloading and fan surge.

B. Manufacturers must prove experience in the production of similar products of this type for at least ten (10) years prior.

C. Fans shall be air and sound certified in accordance with AMCA 210 and 300 and shall bear the AMCA seal.

D. Kitchen Range Hood Exhaust Fans: Comply with requirements of NFPA 96.

E. Products Requiring Electrical Connection: Listed and classified by Underwriters Laboratories Inc. and other testing firm acceptable to the authority having jurisdiction and all suitable for the purpose specified and indicated.

1.7 ENVIRONMENTAL REQUIREMENTS

A. Do not operate fans for any purpose, temporary or permanent, until ductwork is clean, filters are in place, bearings have been lubricated and fan has been test run under observation.

PART 2 - PRODUCTS

2.1 GENERAL

A. Manufacturers acceptable contingent upon product's compliance with the specifications are as follows:

1. Centrifugal Fans

a. Loren Cook Co.
b. Buffalo Forge Co.
c. Greenheck Fan Corp.
d. Twin City Fan

2. Plenum Fans

a. Greenheck Fan Corp.
b. Loren Cook Co.

c. Twin City Fan

3. Belted Fan Vent Sets

a. Loren Cook Co.
b. Buffalo Forge Co.
c. Greenheck Fan Corp.
d. Twin City Fan

4. Roof Mounted Centrifugal Fans

a. Greenheck Fan Corp.
b. Loren Cook Co.
c. ACME Fan Co.
d. Twin City Fan

5. Up-Blast Roof Mounted Centrifugal Fans

a. Greenheck Fan Corp.
b. Loren Cook Co.
c. ACME Fan Co.
d. Twin City Fan

6. High Pressure Roof Mounted Centrifugal Fans

a. Loren Cook Co.
b. Pace
c. Greenheck Fan Corp.

7. In-Line Tubular Centrifugal Fans

a. Greenheck Fan Corp.
b. Loren Cook Co.
c. Buffalo Forge Co.
d. New York Blower
e. Twin City Fan

8. Wall Mounted Propeller Fans

a. Buffalo Forge Co.
b. New York Blower
c. Loren Cook Co.
d. Greenheck Fan Corp.
e. Twin City Fan

9. Ceiling Mounted Cabinet Fans

a. Greenheck Fan Corp.
b. Loren Cook Co.

c. Twin City Fan

10. High Plume Dilution Blowers

a. Strobic
b. MK Plastics.
c. Greenheck Fan Corp.
d. Loren Cook Co.
e. Plasticair.

B. Selection and Balancing

1. Provide and install items as listed in equipment schedules, as shown on drawings, and as specified, complete in all respects to the functions intended.

2. Provide fans capable of accommodating static pressure variations of ±10%.

3. Provide balanced variable sheaves for motors 15 HP and under, and fixed sheaves for 20 HP and over.

4. Statically and dynamically balance fans in the field to eliminate vibration or noise transmission to occupied areas of the building. Provide certificate of compliance from manufacturer.

5. Provide OSHA and ANSI approved belt guards on interior mounted belt driven fans. Provide weatherproof ventilated housing for exterior mounted fans.

6. Provide special construction fans such as sparkproof, explosionproof, or coated fans as required by the schedule.

7. Provide safety, bird or insect screen where inlet or outlet is exposed.

8. All fans shall be manufactured in accordance with this specification even where techniques are required which are not considered standard by that manufacturer.

9. Verify fan arrangement with the Contractor including motor location for servicing and discharge arrangements for proper airflow.

10. Where fixed speed sheaves are specified for a particular fan, provide (2) additional sheaves (one motor and one drive) as necessary for final air balancing.

C. Painting

1. Each fan component shall be thoroughly cleaned, degreased and deburred before the application of a rust preventive primer.

2. Two (2) coats of a rust preventive primer shall be applied under a topcoat of air-dried epoxy or enamel. Minimum coating thickness shall be 5 to 6 mils. The final coat shall be applied after final assembly to all surfaces.

3. Special coatings shall be provided for corrosive exhaust systems as specified under the fan specification.

D. Additional Corrosion Protection

1. Fans serving laboratory fume hoods, or as scheduled on the drawings, shall have all components in contact with the airstream provided with a minimum of (2) coats of 5 mil thick air-dried Heresite VR500 coating or approved equal.

E. Inlet Vanes

1. Variable volume inlet vane control with modulating inlet dampers shall be provided as required by control sequence or as scheduled on the drawings. The inlet vanes shall consist of at least (7) blades per slide, each adequately supported with pivot bearings on each blade. Blades shall be center supported or cantilevered. Both sets of inlet vanes shall be operated by (1) lever mounted on the fan housing with connecting shaft between fan inlets. The inlet vane control operating mechanism and linkage may be center located or located inside the fan housing. The inlet vane control must be mounted in the inlet cone. Bolt-on type controls do not provide smooth inlet airflow and are not acceptable. Pneumatic operator shall be provided and installed by others. Fan shall have stable operation over the entire variable inlet vane operating range from shut-off to free delivery.

F. Special Fan Construction

1. Fans serving laboratory fume hoods, paint spray booth, or scheduled on the drawings, shall be constructed in accordance with AMCA 99-0401 Type "A" or "B" spark resistant construction.

2.2 CENTRIFUGAL FANS

A. General

1. Fan selection and ratings shall be based on tests made in accordance with ASHRAE 51 and AMCA 210 and shall be licensed to bear the AMCA seal.

2. Fans shall be Class I construction and labeled UL 705.

3. Fans shall be backwardly inclined, airfoil, or flat blade type with a minimum of (10) blades.

4. Fans shall have sharply rising pressure characteristics at the operating point specified and shall be quiet and stable in operation. Horsepower characteristics shall be self-limiting and at peak value at the specified operating point.

5. The specified fan RPM, outlet velocity, and tip speed are the maximum acceptable. The motor horsepower, CFM, and static pressure are the minimum acceptable.

6. Fan arrangements shall be minimum AMCA pressure class, single-width, single-inlet or double-width, double-inlet, clockwise or counter-clockwise rotation, shall be as scheduled on the drawings and as coordinated by the Contractors in the field.

7. Each fan shall be fully assembled with motor and drive on a structural steel base and run tested at the factory prior to shipment of the unit. Testing shall be conducted at the operating speed or maximum fan class speed. The total fan assembly shall be checked for balance and compared against the acceptable levels on the Rathbone Chart. The amplitude of vibration (displacement in mils) at operating speed measured at each unit fan bearing shall not exceed the values given in the following table:

Fan RPM	Displacement Mils
500	4.2
800	3.0
1100	2.3
1400	1.9
1700	1.6

Note: Displacement shall be peak-to-peak in X, Y and Z directions.

B. Fan Base

1. Fan with motor and drive shall be mounted on a structural steel base having a minimum 6" depth.

2. The base shall be electrically welded, and after welding, the base shall be cleaned, primed and painted to match fan coating.

3. Base steel sizing and construction shall be sufficient to allow the entire assembly to withstand the rigors of shipping and rigging.

4. Base shall be provided with lifting lugs and motor slide rails.

5. Fans with inertia bases as indicated in equipment schedules on mechanical drawings shall have structural bases constructed to accommodate concrete after installation. Bases shall be in accordance with Vibration Isolation Section.

6. All bases shall be constructed with gussetted brackets to accommodate field installed spring isolators as specified under Vibration Isolation Section.

C. Fan Housing

1. Fan housing shall be heavy gauge continuous welded steel construction with fan scroll and bearings supported from a structural steel framework. Minimum gauge construction shall be as indicated in the material construction schedule.

2. Fan housing shall be suitably braced to prevent vibration and pulsation.

3. Fans having wheel diameters 36" and larger shall have horizontally flanged split housings as required for installation.

4. Fan housing and inlet shall be constructed to allow the fan wheel(s) to be removed through the inlet opening when the inlet cone is removed.

5. A quick opening clean out door, shaped to conform with the scroll contour shall be provided with heavy-duty latches.

6. A 1/2" tapped 3/4" diameter pipe coupling drain connection shall be welded to the fan scroll at the lowest point.

7. Fans shall be convertible to a minimum of (8) standard discharge arrangements.

8. All fans shall be provided with a flanged discharge. The Sheet Metal Contractor shall provide the matching companion flange.

9. Fan cut-off shall be provided to deliver good pressure distribution.

10. A weatherproof housing shall be provided with ventilation grilles to cover motor and drive assembly for exterior mounted fans.

11. Exhaust fans serving kitchen hoods shall be so designed to satisfy NFPA 96, UL 762 and any other local codes required for kitchen hood exhaust system with cleanout door and grease drain with grease containment container.

D. Fan Inlet and Wheel Cone

1. Precision die spun or formed, and matched inlet and wheel cones shall be provided for streamlined airflow into the wheel to ensure full loading of the blades.

2. Inlet and wheel cones shall be hyperbolic. Radial side sheets are not acceptable.

3. Inlet cone shall be heavy gauge steel bolted to fan housing to allow for removal.

4. Fans having duct-connected inlets shall be provided with a flanged inlet collar with matching companion flange.

5. Fans which are not duct connected shall be provided with inlet screen(s). Inlet screen(s) shall be a nominal 1" by 1" mesh fabricated 10-gauge steel.

6. Hubs shall be straight bored, keyed and set screwed to shaft for positive attachment. Hubs shall be securely riveted to the backplate or center plate.

7. Bushed hubs are not acceptable.

8. Double width double inlet fans shall be a single wheel of the common center plate design or (2) single-width single-inlet wheels back to back, each keyed and set screwed to a common shaft.

9. Fan blades shall be continuously welded to the inlet hub and the backplate.

10. Wheel center plate or backplate shall be heavy gauge steel construction with a minimum gauge as indicated in material construction schedule.

11. The fan shaft shall be solid AISI C-1018, 1040 or 1045 hot rolled steel, accurately turned, ground and polished, and ring gauged for accuracy.

12. Recommended bearing manufacturer tolerances must be met in the contact area for bearings.

13. All shafts must be dial indicator inspected for straightness after the keyways are cut.

14. Fan shaft shall be coated with a rust inhibitive coating.

15. Fan wheel shall be statically and dynamically balanced prior to fan assembly.

16. The entire rotating assembly shall be designed so the first critical speed is a minimum of 25% greater than the fan design speed.

E. Fan Shaft Bearings

1. Fan bearings shall be foot-mounted type, bolted on a rigid welded steel framework integral with the housing.

2. Bearings shall be sized for a minimum L-10 life of 200,000 hours at maximum fan class operating conditions including belt pull. Bearings shall be selected in accordance with standards set forth by the Anti-Friction Bearing Mfrs. Assn.

3. The bearings shall be double-row spherical, self-aligning, grease lubricated, roller bearings housed in a horizontally split pillow block housing.

4. Bearings shall be SKF-SAF Series 22500 or Linkbelt P-B22400H or approved equal.

5. Extruded copper grease leads shall be provided to an easily accessible location.

F. Fan Drive

1. Fans shall be belt driven unless otherwise specified. The drive shall be a multiple V-belt type sized for 1.65 times the fan motor horsepower. Sheaves shall be fixed or adjustable based on fan motor horsepower as specified hereinbefore. The fan sheave shall have a tapered lock, split and keyed hub.

2. Motors shall meet requirements specified in Special Conditions Section.

3. Motors shall be 1800 rpm for all belt driven fans and 1200 RPM or 900 rpm for all direct driven fans.

4. An OSHA approved type fan drive guard shall be provided with provision for RPM measurement, without removing the guard. The guard shall be made of 1/2" 16 gauge flattened expanded steel, wrapped around a 16 gauge channel frame suitably braced to prevent vibration. Paint guard with coating similar to fan.

5. Fan belts shall be oil resistant 24,000-hour non-static belts.

G. Fan Material Construction Schedule

1. The following schedule indicates minimum allowable steel gauge thicknesses for construction:

Housing				Wheel			
Wheel Size	**AMCA Pressure Class**	**Side Sheet**	**Scroll**	**Blades**	**Wheel Cone**	**Back-Plate**	**Center-Plate (DWDI)**
12	1	12	14	16	10	8	8
thru	2	10	12	16	10	8	8
22	3	10	10	16	10	8	8
24	1	12	14	16	10	8	8
thru	2	12	14	16	10	8	8
33	3	8	10	16	10	8	1/4
36	1	12	14	16	10	8	8
	2	12	14	16	10	8	8
	3	8	10	16	10	8	1/4
40¼	1	12	12	14	10	8	8
thru	2	12	12	14	10	1/4	1/4
44½	3	8	10	14	10	1/4	1/4
49	1	12	12	12	10	8	8
	2	12	12	12	10	1/4	1/4
	3	8	10	12	10	1/4	1/4
54¼	1	12	12	12	8	8	1/4
	2	12	12	12	8	1/4	5/16
	3	8	10	12	8	1/4	3/8
60	1	12	12	12	8	3/16	1/4
	2	12	12	12	8	3/8	3/8
	3	8	10	12	8	3/8	3/8
66	1	8	8	10	1/4	3/16	5/16
	2	8	8	10	1/4	3/8	3/8
	3	8	8	10	1/4	3/8	3/8

Housing				Wheel			
Wheel Size	**AMCA Pressure Class**	**Side Sheet**	**Scroll**	**Blades**	**Wheel Cone**	**Back-Plate**	**Center-Plate (DWDI)**
73	1	8	8	8	1/4	1/4	5/16
	2	8	8	8	1/4	3/8	3/8
	3	8	8	8	1/4	3/8	3/8

2. Manufacturers shall use their standard gauges if heavier than those indicated above. Information on standard construction shall be made known if requested by the Architect/Engineer.

2.3 PLENUM FAN ASSEMBLIES

A. General

1. All fans shall meet the airflow performance specified and shall not exceed the break horsepower or sound power levels specified on the mechanical equipment schedule.

2. Fan performance shall be based on testing and be in accordance with AMCA Standards 210 and 300. All fans shall have a steep pressure/volume curve.

3. Fans shall be AMCA certified for air and sound performance.

4. Fan(s) shall be plenum type, designed for horizontal airflow

5. Fans shall be AMCA arrangement 3 with airfoil backward-inclined blades, AISI C-1045 hot rolled steel turned/ground and polished shaft. Wheel and frame shall be of welded construction

6. Completed isolated assemblies shall be dynamically balanced in all 3 planes to category BV-2 for fan 5 hp or less and category BV-3 for fans greater than 5 hp as required by ANSI/AMCA Standard 204 in the horizontal, vertical and axial planes meeting “Factory Filter In” and “Startup Filter Out” requirements.

7. Fans shall be single width airfoil centrifugal plenum type, designed for rugged industrial duty and suitable for continuous operation. All fans larger than 18” diameter shall have a minimum of 12 blades. Fans shall be selected to operate at a point no higher than 90% of the peak static pressure rating as defined by the fan performance curve at the selected operating speed.

8. Fan shafts shall be solid AISI 1040 or 1045 steel. Shafts shall be turned, ground and polished to a minimum 16-micro-inch finish. Shafts shall be sized to run at a minimum of 20% greater than the maximum AMCA class speed.

9. Inlet cones shall be precision spun or die formed. Inlet cones shall be aerodynamically matched to the wheel side plate to provide streamlined airflow in the wheel and ensure full loading of the blades.

10. All fan section access doors shall have one (1) latch, which requires a tool to open.

11. Fans shall be isolated from bulkhead walls by means a neoprene coated flexible fabric connector.

B. Motor

1. Motor shall be TEFC see Motor specification section.

2. Motors shall have a 1.15 service factor. [Motors shall be suitable for use with variable frequency drives].

C. Drive

1. Provide belt or direct drive as indicated.

2. Belt drive

a. Belt drive shall have fixed pitch sheaves. Drive belts shall have a 1.50 service factor.

b. Drive assembly shall be furnished with a totally enclosed beltguard.

c. Sheaves and Belts: All sheaves shall be selected with a 1.5 service factor. Sheaves shall be machined from a close grain cast iron and statically balanced by the manufacturer. Drive belts shall be a V type. One variable pitched sheave shall be provided on motors from 1 to 15 horsepower. Fixed pitch sheaves shall be provided on motors larger than 15 horsepower. Where fixed sheaves are provided one sheave exchange shall be provided as required FOB the factory. Belts shall be oil and heat resistant.

3. Direct drive

a. Motor shall be 1200 rpm or less.

D. Bearings

1. Fan bearings shall be heavy-duty, pillow block, self-aligning ball or roller type, and grease lubricated. Using AFBMA ratings, bearings shall be selected for a minimum L-10 life of 100,000 hours. Both bearings shall have the same bore, type and manufacturer. At least one bearing shall be fixed. Both bearings being the floating type is not acceptable. Extended flexible lube lines shall be provided and extended to the drive side of the fan.

E. Base

1. Fans shall be supplied with following features: 2” nominal deflection isolators, fan manufacturer's standard paint finish, inlet

2. Fan assemblies shall be designed for heavy-duty industrial applications with no structural resonance occurring within the fan operating speed range when isolated. Fan framing assemblies shall be fabricated from structural steel. Formed members are not acceptable. This structural steel shall be welded together to form a rigid integral base. Fan assemblies shall be independently isolated with spring-type vibration isolators.

F. Fan unloading devices

1. Each variable air volume supply and return fan shall be provided with separate variable frequency drives.

2.4 BELTED VENT SETS

A. May not be used in place of centrifugal fan.

B. Similar to centrifugal fans above except:

1. When scheduled on the drawings, fume hood exhaust fans shall, in lieu of topcoat of enamel, modify paint scheme to provide a more corrosive resistant finished product using epoxies or vinyls. Minimum thickness shall be 5 mils.

2. All fans are single-width single-inlet.

3. Statically and dynamically balance fans and delete vibration run test.

4. When fans are mounted exposed-to-weather, in lieu of OSHA guard specified above, provide a weatherproof cover over entire drive assembly to ensure protection from weather.

5. Fans without inlet vanes unless otherwise specified on drawing schedule.

6. Motors shall be total enclosed fan cooled (TEFC) meeting requirements of the Motor Section of the Special Conditions.

2.5 ROOF MOUNTED CENTRIFUGAL FANS

A. Provide belt driven centrifugal type roof mounted fans with capacities as indicated in the equipment schedules on the mechanical drawings. Fans complete with curb cap suitable for curb mounting. Roof curbs shall be provided by the HVAC Contractor.

B. Fans housing shall be heavy gauge spun aluminum with gauges as listed in the following schedule, mounted to a rigid support network constructed of galvanized or

epoxy coated steel. Fan housing shall have a rigid wire bird screen mounted to the unit discharge.

C. Drive frame, bearing support, and motor support shall be heavy gauge galvanized steel.

D. Fan inlet cone shall have a die spun hyperbolic shape, matched to the wheel cone to ensure full loading of fan blades to maximize efficiency.

E. Fan wheel shall have single thickness backward inclined blades or true hollow airfoil shaped blades. Wheel characteristics shall be non-overloading.

F. Fan inlet cone, wheel cone, blades and backplate shall be constructed of heavy gauge aluminum.

G. Blades shall be welded, riveted or bolted to wheel cone and backplate.

H. Wheel shall be statically and dynamically balanced.

I. Drive shaft shall be ground and polished high grade steel supported by permanently lubricated sealed ball bearings housed in a cast iron flanged mounted housing.

J. Bearings shall be sized for a minimum L-10 life of 100,000 hours at maximum fan operating conditions including belt pull. Bearings shall be selected in accordance with standards set forth by the Anti-Friction Bearing Mfrs. Assn.

K. Drives shall be sized for a minimum of 1.65 times the fan motor horsepower. Sheaves shall be adjustable and have a tapered split and keyed hub. Belts shall be oil resistant 24,000-hour non-static type.

L. Motor and drive assembly shall be mounted on neoprene vibration isolators.

M. Motor, drive, and bearings shall be out of the exhaust airstream and housed to facilitate ease of maintenance. Motor cooling shall be through the fan drive and motor housings.

N. Motor shall be wired to a factory installed disconnect switch. All wiring and electrical components shall comply with the National Electric Code and be UL listed.

O. Motors shall be TEFC in accordance with the Motor Section of the Special Conditions.

P. Provide automatic damper. Damper to open when fan is energized and close when fan is de-energized. See Sheet Metal Section for damper specification.

Q. Damper to be field installed in duct at fan inlet.

R. All fasteners shall be stainless steel.

S. Refer to Roof Curbs Section.

2.6 UP-BLAST ROOF MOUNTED CENTRIFUGAL FANS

A. Fans shall be identical construction to roof mounted centrifugal fans above, except for the following:

1. Fan discharge arranged to discharge the air vertically, away from the roof, using a wind band housing constructed of heavy gauge aluminum.

2. Motor drive compartment shall be ventilated using outside air. A direct connected breather tube shall be used ensuring contaminated air is not induced.

3. A grease trough shall provide single-point drainage of grease or residue for kitchen exhaust applications. Refer to Roof Curb Section herein.

2.7 IN-LINE TUBULAR CENTRIFUGAL FANS

A. Provide belt driven centrifugal type in-line fans with capacities as indicated in the equipment schedules on the mechanical drawings.

B. AMCA pressure Class I or Class II as indicated in the equipment schedule.

C. Fan housing shall be heavy gauge galvanized steel welded to a rigid galvanized structural steel framework or steel coated with an epoxy finish. Minimum thickness of epoxy finish shall be 5 mils. Fan housing shall be provided with mounting brackets at both inlet and discharge suitable for hanger rods or bolting directly to structure.

D. Fan housing shall have inlet and outlet connections flanged.

E. Fan inlet cone shall have a die spun hyperbolic shape and be matched to the wheel cone to ensure full loading of fan blades and to maximize efficiency.

F. Fan wheel shall have single thickness backward inclined blades or true hollow airfoil shaped blades. Wheel characteristics shall be non-overloading.

G. Fan inlet cone, wheel cone, blades and backplate shall be constructed of heavy gauge aluminum or steel. Steel construction shall be coated with an epoxy coating having a minimum thickness of 5 mils.

H. Blades shall be welded to wheel cone and backplate.

I. Wheel shall be statically and dynamically balanced.

J. Drive shaft shall be ground and polished high grade steel supported by permanently lubricated sealed ball bearings housed in a cast iron pillow block housing.

K. Bearings shall be sized for a minimum of L-10 life of 200,000 hours at maximum fan operating conditions including belt pull. Bearings shall be selected in accordance with standards set forth by the Anti-Friction Bearing Mfrs. Assn.

L. Drives shall be sized for a minimum of 1.65 times the fan motor horsepower. Sheaves shall be adjustable and have a tapered lock, split and keyed hub. Belts shall be oil resistant, 24,000-hour non-static type.

M. Fan shall be suitable for horizontal or vertical mounting.

N. Motor, drive, and bearings shall be out of the exhaust airstream and housed to facilitate ease of maintenance. Motor cooling shall be through the fan drive and motor housing. Housing for motor drive and bearings shall be of the same construction as the fan housing.

O. Motors shall be in accordance with Motors Section of the Special Conditions.

P. Fans shall be constructed in accordance with AMCA 99-0401 Type A, B or C.

Q. Provide with 1/2" by 1/2" galvanized wire mesh attached to a galvanized structural steel frame. Frame shall be bolted to the flanged housing construction.

R. Provide thrust arrestors as required to limit movement of the fan upon start-up.

2.8 WALL MOUNTED PROPELLER FANS

A. Entire fan shall be of heavy-duty industrial type construction.

B. Fan panel shall be constructed of heavy gauge plate steel with a die formed or spun venturi shaped inlet cone built into the panel.

C. Fan panel edges shall be formed back. Corners shall be welded and ground.

D. Fan wheel, motor, drive and bearings shall be supported from fan panel using structural channel or heavy plate steel. Bearing housings and motor base shall be mounted on a heavy steel plate spanning the (2) vertical support members. All construction shall be welded or bolted.

E. Wheel shall have a minimum of (4) propeller blades, die formed constructed of heavy gauge steel or aluminum. A reinforcing gusset shall be welded or riveted to the blades and to a machined hub.

F. Drive shaft shall be ground and polished high-grade steel supported by grease-lubricated ball bearings housed in a cast iron pillow block foot mounted housing.

G. Bearings shall be sized for a minimum L-10 life of 100,000 hours at maximum fan operating conditions including belt pull. Bearings shall be selected in accordance with standards set forth by the Anti-Friction Bearing Mfrs. Assn.

H. Drives shall be sized for a minimum of 1.65 times the fan motor horsepower. Sheaves shall be fixed or adjustable depending on fan motor horsepower and shall have a tapered lock, split and keyed hub. Belts shall be oil resistant, 24,000-hour non-static type.

I. Motor shall be in accordance with the Motor Section of the Special Conditions. Motor shall be mounted on an adjustable slide base.

J. Fans shall be provided with motor side and fan side guards where open or unprotected. Guards shall be 1/2" by 1/2" rod or wire made of galvanized steel. Guard shall completely enclose motor drive and support assembly for motor side guard.

K. Provide fans with heavy duty Class I low leakage, gasketed, multi-blade automatic damper. See Sheet Metal Section and ATC Section for damper specification.

L. Fans shall be constructed in accordance with AMCA 99-0401 Type A, B or C.

M. Where indicated in equipment schedule on mechanical drawings, fans shall be provided with explosion proof motors.

2.9 CEILING MOUNTED CABINET FANS

A. Cabinet shall be constructed of a galvanized steel housing acoustically insulated.

B. Fan wheel shall be constructed of steel and shall be of the centrifugal wheel design.

C. Fan housing shall come complete with integral backdraft damper. Backdraft damper shall not clang or chatter.

D. Entire fan motor and wheel assembly shall be removable without disturbing the housing.

E. Fan motor shall be suitably grounded and mounted on vibration isolator.

F. Provide aluminum mesh inlet grille.

2.10 HIGH PLUME DILUTION BLOWER

A. Base fan performance at standard conditions (density 0.075 Lb/ft^3).

B. Fans selected shall be capable of accommodate static pressure and flow variations of ±15% of scheduled values.

C. Each fan shall be belt driven in AMCA arrangement 10 according to drawings. Fans submitted that are not in arrangement 10 with the motor accessible at roof level, shall have a job crane (complete with removable hoist) provided by the fan manufacturer to perform motor maintenance and replacement.

D. Fans to be equipped with lifting lugs.

E. Fan stand to be coated steel with a minimum of 4 mils of Plastifer epoxy #ES90-AS81 epoxy.

F. Fasteners to be 316 stainless steel.

2.11 HIGH PLUME DILUTION BLOWER

A. Performance ratings:

1. Fans selected shall be capable of accommodate static pressure and flow variations of 0 to +15% of scheduled values.

2. Base fan performance at standard conditions (density 0.075 Lb/ft3).

3. Conform to AMCA standard 210, 260 and 300. Fans must be tested in accordance with AMCA 210, 260 and 300 in an AMCA accredited laboratory and certified for air and sound performance.

4. Fan shall be licensed to bear the AMCA ratings seal:

a. For air performance (AMCA 210),

b. For sound performance (AMCA 300), and

c. For induced flow fan for high plume dilution blowers (AMCA 260).

5. Manufacturers that are not licensed to bear the AMCA 210 and 260 ratings seal, shall provide performance witness testing (at the manufacturer's expense).

a. This test shall verify the critical and safety related dilution performance of the high plume dilution blower, as stated by the manufacturer.

b. The nozzle shall induce ambient air up to 270% of the fan capacity.

c. Shall provide, at the manufacturer's expense, witness testing of fan discharge and entrainment airflow, performed in an AMCA accredited laboratory, in accordance with AMCA 210 and 260.

6. Each fan shall be vibration tested before shipping, as an assembly, in accordance with AMCA 204-05.

a. Each assembled fan shall be test run at the factory at the specified fan RPM and vibration signatures shall be taken on each bearing in three planes - horizontal, vertical, and axial.

b. The maximum allowable fan vibration shall be less than 0.10 in./sec peak velocity; filter-in reading as measured at the fan RPM.

c. This report shall be provided at no charge to the customer upon request.

B. Fans submitted that have motors accessible at roof level, shall have a job crane (complete with removable hoist) provided by the fan manufacturer to perform motor maintenance and replacement.

C. Fans to be equipped with lifting lugs.

D. Fan stand to be coated steel with a minimum of 4 mils of Plastifer epoxy #ES90-AS81 epoxy.

E. All fan and system components (fan, nozzle, wind band, plenum) shall be corrosion resistant coated

1. With LabCoat™, a two part electrostatically applied and baked, sustainable, corrosion resistant coating system; or Heresite P-413C.

2. Finish coating.

a. All parts shall be cleaned and chemically prepared for coating

b. Two coats of powder coating.

1) Shall be electrostatically applied and simultaneously be cured at a temperature of 400°F.

c. The coating system shall not be less than a total thickness of 6 mils

d. The coating system shall not be affected by the UV component of sunlight.

e. Coating system shall exceed 4000 hour ASTM B117 Salt Spray Resistance.

f. Balance fans after coating

F. Fan Housing and Outlet

1. Fan housing to be aerodynamically designed with high efficiency inlet, engineered to reduce incoming air turbulence.

2. Fan housing shall be manufactured in specifically formulated resins for maximum corrosion resistance. UV inhibited and reinforced with fiberglass for structural strength. Fastening bolts holding the casing to the support plate are to be encapsulated in FRP. No uncoated metal fan parts in the corrosive airstream will be tolerated. Fans shall be supplied with an internal graphite liner and grounding strap to remove static electricity, as well as a flame retardency of 25 or less, if scheduled.

3. Fan housing on larger sizes shall be manufactured of coated steel with a minimum of 4-6 mils of Plastifer epoxy EES90-AS81. No uncoated metal fan parts will be allowed.

4. A bifurcated fiberglass reinforced plastic (FRP) discharge nozzle shall be supplied by the fan manufacturer and be designed to efficiently handle an outlet

velocity of up to 7200 FPM. The discharge shall include a venturi and wind band to induce ambient air up to 270% of fan capacity.

5. Provide housing drain attached at the lowest point for condensation removal.

6. An access door shall be supplied for impeller inspection and service.

7. Standard finish color to be light gray.

G. Fan Impeller

1. Fan impeller shall be centrifugal backward inclined of airfoil design with non-stall characteristics. The impeller shall be electronically balanced both statically and dynamically Grade G6.3 per AMCA Standard.

2. The impellers to be molded FRP backward inclined. A metal backplate integral to the FRP impeller and encapsulated to resin shall have the hub extending to the outside of the fan housing. The shaft end in the housing to be covered by a tight-fitting FRP cap.

3. Fan impeller on 1825 and larger shall be manufactured of steel and coated with a minimum of 4-6 mils of Plastifer epoxy #ES90-AS81.

H. Fan Inlet Elbow Plenum

1. For constant volume systems, the fan shall be connected directly to duct without need of bypass damper.

2. For variable volume systems, an inlet elbow/plenum shall be provided as shown on drawings. The elbow/plenum shall be equipped with a bypass air damper and drainable inlet air louver for introducing outside air at roof level upstream of the fan. The plenum shall be constructed of galvanized steel, and coated with 4-6 mils of Plastifer epoxy TC-B62Z-B60VZ70, and mounted on roof curb or rails as shown on the project drawings. Inlet elbow plenum to be attached to the fan inlet by a flexible PVC connector, provided by the fan manufacturer.

3. Bypass air damper shall be opposed blade design, and the damper and inlet louver for each inlet elbow/plenum shall be fabricated of aluminum.

4. A fan isolation damper fabricated of epoxy-coated aluminum shall be provided as shown on the project documents.

I. Fan Motors an Drive

1. Motors to be premium efficiency standard NEMA frame, 1800 RPM, TEFC with a 1.15 service factor. A factory mounted NEMA 3R disconnect switch shall be provided for each fan. Motor maintenance shall be accomplished without fan impeller removal or requiring maintenance personnel to access the contaminated exhaust components. All motors shall be VFD rated with Class F insulation.

2. Fans submitted that use 900 RPM, 1200 RPM, or are C-Face motors, shall include one spare motor per fan system, in accordance with ANSI 29.5, section 4-14.7.4, CRITICAL SERVICE SPARES.

3. Drive belts and sheaves shall be sized for 200% of the fan operating brake horsepower, and shall be readily and easily accessible for service, if required.

4. Shaft to be ANSI C-1045 steel, an be protected with TECTYL 822B protective coating.

5. Fan shaft bearings to be selected according to bearing manufacturers recommendations and be sized for an L-10 life of 200,000 hours. Bearings shall be ball or spherical pillow block type sealed to retain lubricant and exclude dust and air

PART 3 - FAN INSTALLATION REQUIREMENTS

3.1 INSTALLATION

A. Fans shall be installed in accordance with manufacturer recommendations, Contract Drawings and reviewed submittals.

B. Fans shall be installed so as to ensure easy accessibility for service or removal or replacement of all components such as, but not limited to, fans, motors, belts, drives, bearings, dampers, actuators, isolators, and field connections.

C. The HVAC Contractor shall install all motors and drives shipped loose. Fans shall be installed and tested, and shall be made fully operational by the HVAC Contractor.

D. Provide fixed sheaves as necessary for final air balancing. The Contractor shall install the fixed sheave after balancing with the Contractor to adjust the fans.

E. Manufacturer shall include the adjustment of pitch for adjustable pitch fans as required by balancing.

F. Set roof mounted fans on sound absorbing insulated curbs. Coordinate installation with Roofing Contractor. Curbs shall be provided by the HVAC Contractor. The HVAC Contractor shall provide all counter flashing.

G. Mount vent sets and vane axial fans located on roof to inertia bases as required under Vibration Isolation Section.

H. Make all penetrations through roof or vertical walls watertight. Submit methods of sealing to Architect/Engineer for review and approval.

I. All fans shall have flexible inlet and outlet couplings to prevent vibration transmission to ductwork.

J. The Contractor shall assemble all loose parts including motors and drive assemblies on site and shall vibration balance the fans in the field. Field adjustment including belt alignment, wheel balancing, belt tension, greasing of bearings, installation of belt guards, and other loose parts shall be provided by the HVAC Contractor.

3.2 COORDINATION

A. The Contractor shall coordinate the fan arrangement with the coordinated ductwork layout prior to ordering the fan. The Contractor shall provide all labor and materials necessary to change fan arrangement in the field when fan arrangement does not match ductwork.

B. The inlet and discharge ductwork shall have a minimum straight run of (2) fan diameters upstream and downstream of the fan. The Contractor shall notify the Engineer in writing if these conditions cannot be achieved. Installation of improper inlet/discharge conditions without the review of the Engineer shall be corrected in the field at no cost to the Owner.

C. The discharge duct arrangement shall comply with AMCA recommended layouts for elbows after fans.

D. The Contractor shall provide all supplemental steel, supports, rods and hangers necessary to hang or mount fans. Supports shall include thrust restraint as required by the fan manufacturer.

E. The fan manufacturer and Contractor shall coordinate the fan orientation for tubular centrifugal fans and shall verify that the fan support and bearings are supplied for the coordinated fan orientation (horizontal or vertical). The Contractor shall revise the fan in the field if job conditions require changing of orientation, at no cost to the Owner.

F. The Contractor shall receive and inspect all fans and motors to make sure that all fans are received without defect. All defective or damaged fans shall be returned to the manufacturer by the Contractor for replacement.

G. The Contractor shall properly protect all equipment to prevent damage from water, dirt, etc. Protection shall include temporary plastic wrap to keep equipment in original factory condition. Fans used for temporary ventilation during construction shall be totally cleaned and refurbished prior to turnover to the Owner.

H. The HVAC Contractor shall mount and vibration balance all fans. The Electrical Contractor shall furnish and install power wiring to the fan motor and verify proper fan rotation. The HVAC and Electrical Contractors shall coordinate the starter requirements to ensure that the proper starter is installed for non-standard motors. The ATC Contractor shall wire all interlocking wiring to the fan including smoke detector wiring for fan shutdown.

I. The HVAC Contractor shall mount all automatic control dampers on the fan either shipped loose or provided by the ATC Contractor.

J. The HVAC Contractor shall mount all field mounted flow measuring devices on the inlet or discharge of the fan prior to fan installation.

END OF SECTION

SECTION 23 4100 – FILTERS

PART 1 - GENERAL

1.1 RELATED DOCUMENTS

A. Drawings and general provisions of the contract, including General and Supplementary Conditions, Section 230500 and other Division 1 Specification Sections, apply to this Section.

B. LEED Building General Requirements: The Owner requires the Contractor to implement practices and procedures to meet the project's environmental performance goals, which include achieving LEED Certification. Specific project goals that may impact this area of work include: Use of recycled-content materials; use of locally-manufactured materials; use of low-emitting materials; construction waste recycling; and the implementation of a construction indoor air quality management plan. The Contractor shall ensure that the requirements related to these goals, as defined in the sections below, are implemented to the fullest extent. Substitutions, or other changes to the work proposed by the Contractor or their Subcontractors, shall not be allowed if such changes compromise the stated LEED Building Performance Criteria.

1. Comply with LEED (Leadership in Energy and Environmental Design) Green Building Rating System BD+C, Version 3.

1.2 WORK INCLUDED

A. Provide filters, filter frames, filter housings, and filter gauges of size, capacity, location and types shown and scheduled on the drawings and hereinafter specified.

1.3 RELATED SECTIONS

A. Examine all drawings and criteria sheets and all other Sections of the Specifications for requirements, which affect work under this Section whether or not such work is specifically mentioned in this Section.

B. Section 017419 "Construction Waste Management and Disposal" for requirements related to construction waste management and disposal at the project site.

C. Section 018113 "VOC Limits for Adhesives, Sealants, Paints and Coatings" for restrictions of VOC in adhesives, sealants, paints and coatings.

D. Section 018119 "Construction Indoor Air Quality (IAQ) Management" for requirements during construction for indoor-air-quality management.

1.4 REFERENCES

A. Applicable provisions of the following Codes and Trade Standard Publications shall apply to the work of this Section, and are hereby incorporated into, and made a part of the Contract Documents.

B. Material standards shall be as specified or detailed hereinafter and as following:

1. ARI 850 – Commercial and Industrial Air Filter Equipment.

2. ASHRAE 52.1 – Gravimetric and dust-Spot Procedures for Testing Air Cleaning Devices Used in General Ventilation for Removing Particulate Matter.

3. ASHRAE 52.2, Method of Testing General Ventilation Air-cleaning Devices For Removal Efficiency by Particle Size. (Minimum efficiency Reporting Value.)

4. MIL-STD-282 – Filter Units, Protective Clothing, Gas-Mask Components, and Related Products; Performance – Test Methods; current edition.

5. UL 586 – Test Performance of High Efficiency Particulate, Air Filter Units.

6. UL 867 – Electrostatic Air Cleaners.

7. UL 900 – Test Performance of Air Filter Units.

1.5 SUBMITTALS

A. See Section 230500 and General Conditions for additional requirements.

B. Product Data: Provide typical catalog of information including arrangements.

C. Manufacturer's Instructions; Indicate installation instructions and recommendations.

D. Warranty: Submit manufacturer's warranty and ensure forms have been completed in Owner's name and registered with manufacturer.

1.6 QUALITY ASSURANCE

A. Manufacturer Qualifications: company specializing in manufacturing the Products specified in this section with minimum five (5) years of documented experience.

B. Products Requiring Electrical Connection: Listed and classified by Underwriter's Laboratories Inc. testing firm acceptable to the authority having jurisdiction and suitable for the purpose specified and indicated.

PART 2 - PRODUCTS

2.1 PREFILTERS TYPE "A"

A. Acceptable manufacturers subject to compliance with the specifications:

1. Flanders (Type 62R)
2. Camfil/Farr
3. Purolator Air Filter (MK80D)
4. American Air Filters

B. Prefilter shall be 4” thick: throwaway, medium efficiency, pleated, disposable type as shown on the drawings. Each filter shall consist of a non-woven fabric media, support grid and enclosing frame. The filter shall be UL listed as Class I.

C. Filter media shall be of the non-woven fabric. The filter media shall have an average efficiency of 30% to 35% and an average arrestance of 90% to 92% in accordance with ASHRAE 52-1, and MERV 8 Rating per ASHRAE 52.2.

D. The effective filter media shall be at least 7.0 sq.ft. of media per 1.0 sq.ft. of filter face area

E. Initial resistance at 500 fpm approach velocity shall not exceed 0.35”w.g (7.0 sq ft per 1.0 sq ft face area, 11 pleats per linear ft. Filter thickness – 4".

F. The media support shall be a welded wire grid or expanded metal with an effective open area of at least 96%. The welded wire grid shall be bonded to the filter media to eliminate the possibility of media oscillation and media pull-away. The media support grid shall be formed in such a manner that it affects radial pleat design, allowing total use of filter media.

G. The enclosing frame shall be constructed of a rigid, heavy duty, high wet strength beverage board, with diagonal support members bonded to the air entering and exiting side of each pleat to ensure plate stability. The inside periphery of the enclosing frame shall be bonded to the filter pack, thus, eliminating the possibility of air bypass.

H. Provide holding frames, factory fabricated of a minimum of 16 gauge stainless steel, and equipped with gaskets and (4) spring type positive sealing fasteners. Fasteners shall be capable of being attached or removed without deforming the gaskets and without the use of tools. Frames shall be dimpled for proper centering and shall be designed so that filters of other efficiencies and depths can be used, at the owner’s discretion, merely by change of fasteners.

2.2 BAG FILTER TYPE “B”

A. Acceptable manufacturers subject to compliance with the specifications shall be as follows:

1. Flanders – PRECISION PAK
2. Camfil/Farr – HI FLO
3. Purolator – SERVA-PAK
4. American Air Filter – DRI PAK

B. Filters shall be of the size and quantity noted on the plans.

C. Construction

1. Each filter shall consist of a (synthetic) or (glass fiber) media (select one), with a bonded backer, individual pockets, and a corrosion resistant galvanized steel header. The filter shall be completely factory assembled and classified by Underwriters Laboratories as (Class I).

2. The stitched pockets shall be sealed with a leak free sealant with pockets and media area of 108 ft^2.

3. Efficient shall be 90-95% per ASHRAE 52.1 Test Method and initial resistance of 500 fpm shall not exceed .65" w.g.

D. Framing

1. Filters shall be installed in 16 GA galvanized frames, or side access filter housings, as noted on plans, furnished by air filter manufacturer.

2.3 FINAL FILTER TYPE "C"

A. Acceptable manufacturers subject to compliance with the specifications shall be as follows:

1. Flanders Rigid Air - 95
2. Camfil/Farr (Riga Flo/200)
3. Purolator Air Filter (Aerocell-95)

B. Air filter shall be 12" deep, high performance, deep pleated, totally rigid.

C. Filter media shall consist of a completely synthetic, electrostatic ally charged microfiber graded mat, with a light spun bonded top sheet and a heavyweight spun bonded support scrim. The filter shall have an average efficiency of 90-95% on ASHRAE 52.1-92 MREV 14 per 52.2. It shall have an average arrestance of not less that 99.5% on that standard. Filters shall be UL listed as UL Class I.

D. Initial resistance at 500 fpm approach velocity shall not exceed 0.70"w.g.

E. The media support shall be a welded wire grid with an effective open area of at least 96%. The welded wire grid shall be bonded to the filter media to eliminate the possibility of media oscillation and media pull-away. The media support grid shall be formed in such a manner that it affects a tapered radial pleat design. The grid shall be designed to support the media both vertically and horizontally.

F. Contour stabilizers shall be galvanized steel and shall be permanently installed on both the air entering and air exiting sides of the filter media pack to ensure that the tapered radial pleat configuration is maintained throughout the life of the filter. There shall be four contour stabilizers on the air entering side and six on the air exiting side. The filter shall be capable of withstanding 10" w.g. pressure drop without noticeable distortion of the media pack.

G. The enclosing frame shall be constructed of stainless steel. It shall be assembled in such a manner that a rigid and durable enclosure for the filter pack is affected. The media pack shall be mechanically and chemically bonded to the inside periphery of the enclosing frame, thus eliminating the possibility of air bypass. The enclosing frame shall be equipped with stainless steel protective diagonal support braces on both the air entering and air exiting sides of the filter. The diagonal support braces shall be mechanically fastened to each contour stabilizer. (Cardboard is not permitted).

2.4 FILTER GAUGES

A. Provide filter gauges as hereinafter specified at all filter locations, in-duct and air handling unit installations. The HVAC Contractor shall also coordinate the filter frames with the air-handling units provided to ensure compatibility of systems and equipment.

B. Acceptable manufacturers subject to compliance with the specifications shall be as follows:

1. F.W. Dwyer Model 2000
2. Deiterich Standard Corp.
3. Bacharach Instrument Co.

C. Provide (1) filter gauge for each filter bank. The scale shall be selected so that it allows for 1" w.c. greater than the final filter resistance.

D. Provide suitable decal at the gauge for each filter system containing servicing information.

E. Static pressure taps shall be located in the airstreams as recommended by the manufacturer and connected to gauges located on air handling unit casings or on walls for in-duct HEPA filter locations as directed, with 1/4" o.d. aluminum tubing.

F. Provide gauges similar to Dwyer photohelic pressure switch/gauges 3 in 1 indicating gauge with 2 phototransistor actuated DPDT relays. Similar to Dwyer Series A3000

2.5 FILTER HOLDING RACK – SIDE ACCESS

A. General

1. Provide side access, one or two-stage filter system similar to Flanders Sureseal, consisting of a housing, access doors, tracks. Housing shall accommodate any 2" prefilter and various final filters with efficiencies of 45%-95%, per ASHRAE 52-76.

B. Leakage

1. Leakage at rate airflow, upstream to downstream of filter, holding frame, and slide mechanism shall be less than 1% at 3" w.g. differential. Leakage into housing from ambient atmosphere at rated airflow shall be less than 0.5% at 3" w.g. negative. Manufacturer shall submit substantiating test reports.

C. Housing

1. Housing shall be factory fabricated and assembled of 16-gauge stainless steel with corner posts of Z-channel bracing to eliminate racking. Each housing shall be equipped with two (2) access doors and 1.5" standing flanges with prepunched holes to facilitate field installation Flanges shall be notched to provide water runoff. Housings must be weatherproof and suitable for rooftop/outdoor installation.

D. Access Doors

1. Access doors shall be constructed of a minimum of 16-gauge stainless steel and positioned to facilitate removal and replacement of filters from either side of the housing. Each door shall be equipped adjustable and replaceable positive seating latches and replaceable hinges. The peripheral gasket material shall be of high memory sponge neoprene. Holding frame to door contact shall be gasketed with 1"x1.25" polyurethane foam to affect a leak proof seal.

E. Tracks

1. Tracks shall be field adjustable and replaceable, heavy gauge, anodized aluminum extrusion designed to accommodate Camfil/Farr Universal Holding Frames. Each extrusion shall be equipped with a replaceable, non-woven pile encased, aluminum backed, polypropylene finned seal providing an air barrier between the extrusion and Universal Holding Frame.

PART 3 - EXECUTION

3.1 FILTER, FILTER FRAMES, FILTER HOUSING AND FILTER GAUGES

A. Filters, filter frames, filter housings, and filter gauges shall be installed in accordance with manufacturer recommendations, Contract Drawings, and reviewed submittals.

B. Filters shall be installed so as to ensure easy accessibility for service, removal and replacement of filters.

C. No system shall be operated without filters.

D. During temporary ventilation:

1. The units shall not be operated without filters. Provide the following temporary filters during initial start-up and temporary operation.

	Specified filter	Temporary Filter
a.	TYPE A	TYPE A
b.	TYPE B	TYPE B
c.	TYPE C	TYPE C

2. Prior to Owner occupancy, all temporary filters shall be replaced with the specified filter.

E. Prior to air balance, install design set of per- and final filters in air handling units, and leave (1) new spate set of filters with the Owner.

END OF SECTION

SECTION 23 5700–HEAT EXCHANGERS

PART 1 - GENERAL

1.1 RELATED DOCUMENTS

A. Drawings and general provisions of the Contract, including General and Supplementary Conditions, Section 230500 and other Division 1 Specification Sections, apply to this Section.

B. LEED Building General Requirements: The Owner requires the Contractor to implement practices and procedures to meet the project's environmental performance goals, which include achieving LEED Certification. Specific project goals that may impact this area of work include: Use of recycled-content materials; use of locally-manufactured materials; use of low-emitting materials; construction waste recycling; and the implementation of a construction indoor air quality management plan. The Contractor shall ensure that the requirements related to these goals, as defined in the sections below, are implemented to the fullest extent. Substitutions, or other changes to the work proposed by the Contractor or their Subcontractors, shall not be allowed if such changes compromise the stated LEED Building Performance Criteria.

1. Comply with LEED (Leadership in Energy and Environmental Design) Green Building Rating System BD+C, Version 3.

1.2 WORK INCLUDED

A. Furnish and install all heat exchangers to make a complete and operations system.

B. All system components shall be installed in accordance with local code including supports and bases.

C. Secure all permits and local/State approval for the installation of all components included under this Section.

D. Provide factory assembled and tested shell and tube or plate-and-frame heat exchangers with plate quantity, capacity, temperature range, physical dimensions and other characteristics, as scheduled on the drawings and as hereinafter specified.

E. Provide piping, valves, controls, fittings and accessories as required and shown on the drawings.

1.3 RELATED SECTIONS

A. Examine all drawings and criteria sheets and all other Sections of the Specifications for requirements which affect work under this Section whether or not such work is specifically mentioned in this Section.

B. Section 017419 "Construction Waste Management and Disposal" for requirements related to construction waste management and disposal at the project site.

C. Section 018113 “VOC Limits for Adhesives, Sealants, Paints and Coatings” for restrictions of VOC in adhesives, sealants, paints and coatings.

D. Section 018119 “Construction Indoor Air Quality (IAQ) Management” for requirements during construction for indoor-air-quality management.

1.4 REFERENCES

A. Applicable provisions of the following Codes and Trade Standard Publications shall apply to the work of this Section, and are hereby incorporated into, and made a part of the Contract Documents.

B. Material standards shall be as specified or detailed hereinafter and as follows:

1. ASME (BPV VIII, 1) – Boiler and Pressure Vessel Code, Section VIII, Division 1 – Rules for Construction of Pressure Vessels; 1995.

1.5 SUBMITTALS

A. See Section 230500 and General Conditions for additional requirements.

B. Product Data: Provide date with dimensions, locations and size of tappings and performance date.

C. Shop Drawings: Indicate dimensions, locations and size of tappings and performance data.

1. Design Data: Indicate in sufficient detail to verify that heat exchangers meet or exceed specified requirements.

2. Test Reports: Indicate pressure tests.

D. Manufacturer’s Instructions: Indicate installation and support requirements.

E. Operation and Maintenance Data: Include start up and shut down instructions, assembly drawings and spare parts list.

1.6 REGULATORY REQUIREMENTS

A. Conform to ASME (BPV VIII, 1) – Boilers and Pressure Vessels Code for manufacture of tubular heat exchangers and heat exchanger shells and plate and frame type heat exchangers.

B. Conform to ASME Code Form #U-1 for unfired pressure vessels.

1.7 DELIVERY, STORAGE AND HANDLING

A. Protect internals from entry of foreign material by temporary caps on flanged openings.

PART 2 - PRODUCTS

2.1 WATER TO WATER HEAT EXCHANGER

A. Acceptable Manufactures contingent on compliance with the specification:

1. Bell & Gossett
2. Armstrong
3. Amtrol
4. Patterson-Kelly

B. Provide water to water heat exchangers in accordance with the capacities, piping and valving arrangements indicated and as scheduled on the drawings.

1. Heat exchangers shall be constructed with cast iron heads, steel shell, baffles and steel tube sheets in accordance with ASME Code for Unfired Pressure Vessels and furnished with manufacturer's data report.

2. Minimum pressure rating shall be as scheduled on the drawings however it shall not be less then the rating specified for the piping systems.

3. Heating surface shall be 3/4" o.d. copper tubing securely expanded to the tube sheets at one end and properly supported at the other end.

4. Heat exchangers shall be complete with all necessary outlets for supply and return primary water, water inlet and outlet, drain and vent connections, cleanout handholes and tapings for temperature and pressure gauges. Fouling factors for both tube and shell shall be a minimum of 0.002 unless scheduled otherwise.

5. Provide saddle supported per heat exchanger.

2.2 STEAM-TO-HOT WATER SHELL-AND-TUBE HEAT EXCHANGERS (CONVERTERS)

A. Acceptable Manufactures contingent on compliance with the specification:

1. Bell & Gossett
2. Armstrong
3. Amtrol
4. Patterson Kelly

B. Provide steam-to-hot water shell-and-tube heat exchangers in accordance with the capacities, piping and valving arrangements indicated, as scheduled on the drawings, and as hereinafter specified.

C. Heat exchangers shall be installed where shown on the plans, complete with all necessary appurtenances, base supports, and adjustable saddles. Quantity capacity, physical dimensions and other characteristics shall be as scheduled on the plans.

D. Heat exchangers shall be constructed with cast iron heads, steel shell baffles, and steel or cast iron removable tube sheets for heating hot water, copper tie rods, and steel nuts and bolts.

E. Heating surface shall be 3/4" o.d. copper tubing securely expanded to one end of the tube sheets and properly supported at the other end. The copper tubing shall have a minimum thickness of 0.035".

F. Heat exchangers shall be complete with all necessary outlets for steam supply and return, water inlet and outlet, drain and vent connections, vacuum breaker, cleanout handholes, and tappings for temperature and pressure gauges.

G. Fouling factors for both tube and shell shall be minimum 0.002 or as scheduled. Tube velocity shall not exceed 7.0 fps.

H. Heat exchangers shall be designed so as to prevent entering steam from impinging directly on the tubes, shall be tested at the factory under a hydrostatic pressure of 300 psig, conform to ASME Codes for pressure vessels, and shall bear an ASME stamp for 125 psig working pressure, with certificate issued.

I. Steam-to-hot water heat exchangers shall have steam in the shell and water in the tubes. Shop drawings shall be submitted for heat exchangers with all dimensions, capacities, materials of construction and nozzle arrangements shown. Fabrication shall not commence until shop drawings have been approved.

J. Provide saddle supports per heat exchanger.

2.3 PLATE AND FRAME HEAT EXCHANGERS

A. Acceptable manufacturers subject to compliance with the specifications:

1. Alfa-Laval
2. Bell & Gossett
3. Mueller
4. Patterson-Kelly

B. Heat exchangers shall conform to the latest ASME Code for Unfired Pressure as detailed in Form #U-1 and shall be Code stamped for design pressure, 225 psig test pressure as scheduled on the drawings.

C. Heat exchanger construction shall consist of an epoxy coated steel frame with steel plate carriers, steel compression bolts, gaskets, Type AISI 304 stainless steel replaceable plates, and an aluminum or galvanized steel protective plate pack shroud.

D. A minimum of 25% capacity shall be included in the frame length to allow for future expansion. Each heat exchanger shall be of single-pass construction with all connections on the fixed frame plate to facilitate cleaning of the unit and shall be designed to accept ANSI flanged connections.

E. Fouling factor for both sides shall be 0.00025 or as scheduled.

PART 3 - EXECUTION

3.1 STEAM-TO-HOT WATER SHELL-AND-TUBE HEAT EXCHANGERS (CONVERTERS) INSTALLATION

A. Steam-to-hot water shell-and-tube heat exchangers shall be installed in accordance with manufacturer's recommendations, Contract Drawings, and reviewed submittals.

B. The heat exchanger shall be installed such that the shell shall pitch down toward the bottom condensate drain opening.

C. The heat exchanger shall be installed such that there shall be sufficient clearance equal to the tube length to remove the heads and clean or eddy current test the tubes.

3.2 WATER TO WATER HEAT EXCHANGER INSTALLATION

A. Heat exchangers shall be installed in accordance with manufacturer's recommendations, Contract Drawings, and reviewed submittals.

B. Provide adequate space for tube pull.

C. Provide adequate space for heat exchanger removal.

3.3 STEAM TO WATER HEAT EXCHANGER (CONVERTER) INSTALLATION

A. Heat exchangers shall be installed in accordance with manufacturer's recommendations, Contract Drawings, and reviewed submittals.

B. Provide adequate space for tube pull.

C. Provide adequate space for heat exchanger removal.

3.4 PLATE FRAME HEAT EXCHANGER INSTALLATION

A. Plate-and-frame heat exchangers shall be installed in accordance with manufacturer's recommendations, Contract Drawings, and reviewed submittals.

B. The heat exchanger shall be installed level with ample room for opening with wrenches. Provide room for piping valves, flexible couplings and support piping at connections.

C. Provide flanged connections, vents, drains and relief valves.

D. Provide adequate space for service.

E. Provide adequate space for heat exchanger removal.

3.5 START UP SERVICE

A. Provide start-up service by a factory approved and certified technician.

END OF SECTION

SECTION 236415 – AIR COOLED WATER CHILLERS

PART 1 – GENERAL

1.1 SUMMARY

A. Section includes design, performance criteria, refrigerants, controls, and installation requirements for air-cooled scroll compressor chillers.

1.2 REFERENCES

A. Comply with applicable Standards/Codes of AHRI 550/590, ANSI/ASHRAE 15, ETL, cETL, NEC, and OSHA as adopted by the State.

B. Units shall meet the efficiency standards of ASHRAE Standard 90.1 (2010).

1.3 SUBMITTALS

A. Submit shop drawings and product data in accordance with the specifications.

B. Submittals shall include the following:

1. Dimensioned plan and elevation view drawings, required clearances, and location of all field connections
2. Summary of all auxiliary utility requirements such as electricity, water, etc. Summary shall indicate quality and quantity of each required utility.
3. Single line schematic drawing of the field power hookup requirements, indicating all items that are furnished.
4. Schematic diagram of control system indicating points for field interface/connection.
5. Diagram shall fully delineate field and factory wiring.
6. Certification of factory-run test of chiller unit signed by company officer.
7. Installation manuals.

1.4 QUALITY ASSURANCE

A. Qualifications: Equipment manufacturer must specialize in the manufacture of the products specified and have five years experience with the type of equipment.

B. Regulatory Requirements: Comply with the codes and standards specified.

C. Chiller manufacturer plant must be ISO Registered.

1.5 DELIVERY AND HANDLING

A. Chiller shall be delivered to the job site completely assembled and charged with refrigerant and oil by the manufacturer.

1. Comply with the manufacturer's instructions for rigging and handling equipment.

1.6 WARRANTY

A. Standard Warranty (Domestic): The refrigeration equipment manufacturer's warranty shall be for a period of one (1) year from date of equipment start up, but not more than 18 months from shipment. It shall cover replacement parts having proven defective within the above period.

B. 1st Year Labor Warranty: Entire unit

C. Extended Compressor Warranty: None.

D. Extended Unit Warranty: Entire unit (no pumps), four (4) years parts and labor.

E. Refrigerant Warranty: Five (5) years R410A refrigerant.

F. Delay Warranty Start: None.

1.7 MAINTENANCE

A. Maintenance of the chillers shall be the responsibility of the owner and performed in accordance with the manufacturer’s instructions.

PART 2 – PRODUCTS

2.1 ACCEPTABLE MANUFACTURERS

A. Daikin Applied

B. Trane

2.2 UNIT DESCRIPTION

A. Provide and install as shown on the plans factory-assembled, factory-charged air-cooled scroll compressor packaged chillers in the quantity specified. Each chiller shall consist of hermetic tandem or triple scroll compressor sets, brazed plate evaporator (models 025-130), air-cooled condenser section, microprocessor-based control system and all components necessary for controlled unit operation

B. Each chiller shall be factory run-tested with water to verify full-load operation. Operating controls and refrigerant charge shall be verified for proper operation and optimum performance. Any deviation shall be remedied prior to shipment and the unit retested if necessary to confirm repairs or adjustments.

2.3 DESIGN REQUIREMENTS

A. General: Provide a complete scroll compressor packaged chiller as specified herein and as shown on the drawings. The unit shall be in accordance with the standards referenced in section 1.02 and any local codes in effect.

B. Performance: Refer to the schedule of performance on the drawings. The chiller shall be capable of stable operation to a minimum of 50 percent of full load without hot gas bypass. Performance shall be in accordance with ARI Standard 550/590.

C. Acoustics: Sound pressure levels for the unit shall not exceed the following specified levels. All manufacturers shall provide the necessary sound treatment (parts and labor) to meet these levels if required. Sound data shall be provided with the quotation. Test shall be in accordance with AHRI Standard 370.

Sound Pressure (at 30 feet)											
63 Hz	125 Hz	250 Hz	500 Hz	1000 Hz	2000 Hz	4000 Hz	8000 Hz	**Overall dBA**	75% Load dBA	50% Load dBA	25% Load dBA
Sound Power											
63 Hz	125 Hz	250 Hz	500 Hz	1000 Hz	2000 Hz	4000 Hz	8000 Hz	**Overall dBA**	75% Load dBA	50% Load dBA	25% Load dBA

2.4 CHILLER COMPONENTS

A. Compressor

1. The compressors shall be sealed hermetic, scroll type with crankcase oil heater and suction strainer. The compressor motor shall be refrigerant gas cooled, high torque, hermetic induction type, two-pole, with inherent thermal protection on all three phases and shall be mounted on RIS vibration isolator pads. The 20 – 40 ton compressors shall be equipped with an internal module providing compressor protection and communication capability.

B. Evaporator

1. The evaporator shall be a compact, high efficiency, dual circuit, brazed plate-to-plate type heat exchanger consisting of parallel stainless steel plates.

a. The evaporator shall be protected with an electric resistance heater (heat trace tape) and insulated with 3/4" (19mm) thick closed-cell polyurethane insulation. This combination shall provide freeze protection down to -20°F (-29°C) ambient air temperature.

b. The water-side working pressure shall be a minimum of 653 psig (4502 kPa). Vent and drain connections shall be provided in the inlet and outlet chilled water piping by the installing contractor. Evaporators shall be designed and constructed according to, and listed by, Underwriters Laboratories (UL).

C. Condenser

1. The condenser coils shall consist of 3/8 inch (10mm) seamless copper tubes mechanically bonded into plate type fins. The fins shall have full drawn collars to completely cover the tubes. A subcooling coil shall be an integral part of the main condenser coil.

a. Condenser fans shall be propeller type arranged for vertical air discharge and individually driven by direct drive fan motors. Each fan shall be in its own compartment to eliminate cross flow of condenser air during fan cycling and shall be equipped with a heavy-gauge vinyl coated fan guard.

b. Fan motors shall be weather protected, three-phase, direct-drive, 1140 rpm, TEAO type with permanently lubricated ball bearings and inherent overload protection. External coils shall have wire mesh protective guards.

2. Condenser coils shall be rippled aluminum fins.

D. Refrigerant Circuit

1. Each of the two refrigerant circuits shall include a replaceable-core refrigerant filter-drier, sight glass with moisture indicator, liquid line solenoid valve (no exceptions), thermal expansion valve, and insulated suction line.

E. Construction

1. Unit casing and all structural members and rails shall be fabricated of steel and painted to meet ASTM B117, 500-hour salt spray test.

2. Upper condenser coil section of unit shall have protective, 12 GA, PVC-coated, wire grille guards.

F. Control System

1. A centrally located weatherproof control panel shall contain the field power connection points, control interlock terminals, and control system. Power and starting components shall include factory circuit breaker of fan motors and control circuit, individual contactors for each fan motor, solid-state compressor three-phase motor overload protection, inherent fan motor overload protection and two power blocks (one per circuit) for connection to remote, contractor supplied disconnect switches. Hinged access doors shall be lockable. Barrier panels or separate enclosures are required to protect against accidental contact with line voltage when accessing the control system.

2. Shall include optional single-point connection to a non-fused disconnect switch with through-the-door handle and compressor circuit breakers.

G. Unit Controller

1. An advanced DDC microprocessor unit controller with a 4-line by 20-character liquid crystal display provides the operating and protection functions. The controller shall take pre-emptive limiting action in case of high discharge pressure or low evaporator pressure. The controller shall contain the following features as a minimum:

2. Equipment Protection

   a. The unit shall be protected in two ways: (1) by alarms that shut the unit down and require manual reset to restore unit operation and (2) by limit alarms that reduce unit operation in response to some out-of-limit condition. Shut down alarms shall activate an alarm signal.

3. Shutdown Alarms

   a. No evaporator water flow (auto-restart)
   b. Sensor failures
   c. Low evaporator pressure
   d. Evaporator freeze protection
   e. High condenser pressure
   f. Outside ambient temperature (auto-restart)
   g. Motor protection system
   h. Phase voltage protection (Optional)

4. Limit Alarms

   a. Condenser pressure stage down, unloads unit at high discharge pressures.
   b. Low ambient lockout, shuts off unit at low ambient temperatures.
   c. Low evaporator pressure hold, holds stage #1 until pressure rises.

d. Low evaporator pressure unload, shuts off one compressor.

5. Unit Enable Selection

   a. Enables unit operation from either local keypad, digital input, or BAS

6. Unit Mode Selection

   a. Selects standard cooling, ice, glycol, or test operation mode

7. Analog Inputs:

   a. Reset of leaving water temperature, 4-20 mA
   b. Current Limit

8. Digital Inputs

   a. Unit off switch
   b. Remote start/stop
   c. Flow switch
   d. Ice mode switch, converts operation and setpoints for ice production
   e. Motor protection

9. Digital Outputs

   a. Shutdown alarm; field wired, activates on an alarm condition, off when alarm is cleared
   b. Evaporator pump; field wired, starts pump when unit is set to start

10. Condenser fan control - The unit controller shall provide control of condenser fans based on compressor discharge pressure.

11. Building Automation System (BAS) Interface

   a. Factory mounted DDC controller(s) shall support operation on a BACnet®, Modbus® or LONMARK ® network via one of the data link / physical layers listed below as specified by the successful Building Automation System (BAS) supplier.

   b. BACnet MS/TP master (Clause 9)

   c. BACnet IP, (Annex J)

   d. BACnet ISO 8802-3, (Ethernet)

e. LONMARK FTT-10A. The unit controller shall be LONMARK® certified.

f. The information communicated between the BAS and the factory mounted unit controllers shall include the reading and writing of data to allow unit monitoring, control and alarm notification as specified in the unit sequence of operation and the unit points list.

g. For chillers communicating over a LONMARK network, the corresponding LONMARK eXternal Interface File (XIF) shall be provided with the chiller submittal data.

h. All communication from the chiller unit controller as specified in the points list shall be via standard BACnet objects. Proprietary BACnet objects shall not be allowed. BACnet communications shall conform to the BACnet protocol (ANSI/ASHRAE135-2001). A BACnet Protocol Implementation Conformance Statement (PICS) shall be provided along with the unit submittal.

2.5 OPTIONS AND ACCESSORIES

A. The following options are to be included:

1. Water Flow Switch (Factory Installed): A factory-mounted and wired thermal dispersion flow switch to avoid evaporator freeze-up under low or no flow conditions.

2. BAS interface module to provide interface with the BACnet/IP protocol.

3. The following accessories are to be included:

a. Evaporator inlet strainer, 40-mesh with extension pipe and Victaulic couplings

b. Chilled water flow switch to be field mounted in the chilled water line and field wired to terminals in the control panel

PART 3 – EXECUTION

3.1 INSTALLATION

A. Install in strict accordance with manufacturer's requirements, shop drawings, and contract documents.

B. Adjust and level chiller in alignment on supports.

C. Coordinate electrical installation with electrical contractor.

D. Coordinate controls with control contractor.

E. Install a field-supplied strainer in the chilled water return line at the evaporator inlet; 40-mesh on units with brazed-plate evaporators or 20-mesh on shell-and-tube evaporators.

3.2 START-UP

A. Install proper charge of refrigerant and oil.

B. Provide testing and starting of machine, and instruct the Owner in its proper operation and maintenance.

END OF SECTION 23 64 15

SECTION 236500 – COOLING TOWERS

PART 1 - GENERAL

1.1 RELATED DOCUMENTS

A. Drawings and general provisions of the Contract, including General and Supplementary Conditions, Section 230500 and other Division 1 Specification Sections, apply to this Section.

1.2 WORK INCLUDED

A. Furnish and install all cooling towers, in the type, capacity and quantities indicated, including all connection points for make-up, overflow and drains to make a complete and operational system.

B. All systems shall be installed in accordance with local codes including drain and overflow discharge termination points.

C. Secure all permits and local/state approval for the installation of all components included under this Section.

1.3 RELATED SECTIONS

A. Examine all drawings and criteria sheets and all other Sections of the Specifications for requirements which affect work under this Section whether or not such work is specifically mentioned in this Section.

1.4 REFERENCES

A. Applicable provisions of the following Codes and Trade Standard Publications shall apply to the work of this Section, and are hereby incorporated into, and made a part of the Contract Documents.

B. Material standards shall be as specified or detailed hereinafter and as follows:

1. ABMA STD 9 – Load Ratings and Fatigue Life for Ball Bearings.

2. ABMA STD 11 – Load Ratings and Fatigue Life for Roller Bearings.

3. ASME PTC 23 – Atmospheric Water-Cooling Equipment.

4. ASTM A 123 – Standard Specification for Zinc (Hot-Dip Galvanized) Coatings on Iron and Sheet Products.

5. ASTM A 653/A 653M – Standard Specification for Steel Sheet, Zinc-Coated (Galvanized) or Zinc-Iron Alloy-Coated (Galvannealed) by the Hot Dip Process.

6. ASTM E 84 – Test Method for Surface Burning Characteristics of Building Materials.

7. CTI ATC – 105 – Acceptance Test Code for Water Cooling Towers; Cooling Tower Institute.

8. CTI STD-2-201 – Certification Standard for Commercial Water Cooling Towers; Cooling Tower Institute.

9. NEMA MG 1 – Motors and Generators.

1.5 SUBMITTALS

A. See Section 230500 and General Conditions for additional requirements.

B. Product Data: Provide rated capacities, dimensions, weights and point loadings, accessories, required clearances, electrical requirements and wiring diagrams, and location and size of field connections. Submit schematic indicating capacity controls.

C. Shop Drawings: Indicate suggested structural steel supports including dimensions, sizes, and locations for mounting bolt holes.

D. Manufacturer's Instructions: Submit manufacturer's complete installation instructions.

E. Manufacturer's Certificate: Certify that cooling tower performance, based on CT1 ATC-105, CT1 STD-201, or ASME PTC 23 meet or exceed specified requirements and submit performance curve plotting leaving water temperature against wet bulb temperature.

F. Operation and Maintenance Data: Include start-up instructions, maintenance data, parts lists, controls and accessories.

G. Warranty: Submit manufacturer's warranty and ensure forms have been filled out in Owner's name and registered with manufacturer.

1.6 QUALITY ASSURANCE

A. Manufacturer Qualifications: Company specializing in manufacturing the type of products specified in this section, with minimum five years of documented experience.

B. Installer Qualifications: Company specializing in performing work the type specified in this section, with a minimum of five (5) years of documented experience and approved by manufacturer.

1.7 DELIVERY, STORAGE AND HANDLING

A. Factory assembled. For shipping, disassemble into as large as practical sub-assemblies so that minimum amount of field work is required for re-assembly. Provide a list of field installed equipment and an estimate on assembly time.

B. Comply with manufacturer's installation instructions for rigging, unloading, and transporting units.

1.8 WARRANTY

A. Provide a one (1) year extended warranty to include coverage for corrosion resistance cooling tower structure, cooling tower package, fan drive, and motor including all labor and materials.

PART 2 - PRODUCTS

2.1 CLOSED CIRCUIT EVAPORATIVE COOLER

A. Acceptable manufacturers subject to compliance with the specifications shall be as follows:

1. Baltimore Air Coil
2. Marley

B. Performance:

1. Thermal rating shall be certified by the Cooling Technology Institute. The performance shall not be less then that scheduled.

2. Acoustical Performance

a. Sound level for a single cell shall not exceed 74 dBA 5 ft from the air inlet.

C. Provide an evaporative closed circuit fluid cooler as shown on plans. Tower to be of forced draft design with centrifugal fan in the dry airstream. Unit shall have a single fan mounted on end of unit for easy access. Unit to ship completely factory assembled with all optional equipment factory installed unless otherwise specified. Tower manufacturer to operationally test tower before shipment to assure owner of smooth startup.

D. The evaporative fluid cooler shall have the capacity as scheduled

E. Make up

1. Provide an electric motorized valve to control the make up water:

a. Shall be 120 V and slow acting.
b. Suitable for 150 PSIG
c. Provide one.

2. Five (5) probe electric level control in each cell

a. In each cell, provide a probe-type electric water level sensor system. The five-probe assembly shall contain a relay for water make-up, high-level alarm, and a low-level alarm.

F. The heat exchange coil tubes shall be constructed entirely of type L copper to provide maximum corrosion resistance. Coil tubes shall be 5/8 inch O.D. copper tubing with type L headers. Tubes shall be supported by stainless steel tubesheets with high-temperature grommets that allow the tubes to float freely in the tubesheet. The completed coil section shall be U.L. approved and leak tested at 350 p.s.i.g. air pressure under water.

G. The evaporative fluid cooler shall be constructed of heavy gauge, G-210 hot-dip galvanized steel. All sump pan and casing panels shall be flanged outward to allow all connecting fasteners to be located outside of the flooded water area of the unit, assuring a more reliable and permanent water tight joint. To further minimize the potential for corrosion, no welded joints shall be used in the sump pan casing section. The tower shall be designed for wind loads of 30 PSF on any projected area and ship in one piece on minimum 6 inch high galvanized steel channel base rails to allow ease of handling and installation.

H. Access doors shall provide a watertight seal without fasteners or gaskets. Doors shall be made from stainless steel and have handles to lift out for easy access. A minimum of 4 access doors shall be provided, located throughout the tower, to allow easy access and maintenance to both the bottom pan section and the upper coil and spray section. All access doors to be a minimum of 19 inches high by 27 inches wide.

I. The fan and fan motor shall be located in the dry entering air stream on one side of the unit to provide improved service life and easy access for maintenance. The centrifugal fan shall be forward curve, double width, double inlet design and shall be statically and dynamically balanced. The fan shall be mounted on a solid steel fan shaft supported on each end with self aligning, grease lubricated, ball bearings in cast iron housings. Bearings shall be selected for average of 200,000 hour bearing life. Extended grease lines and fittings shall be provided for easy access. V-belt drive shall be designed for 150% of motor horsepower. The fan housing shall be equipped with curved air inlet rings to allow for maximum efficiency. Air volume damper blades shall be provided in the fan housing on the discharge side of the fan.

J. Fan motor shall be, 1800 RPM, open drip-proof type designed for outdoor service with 1.15 service facto. Motors shall be mounted on an adjustable heavy-duty steel base. Motors shall be suitable for VFD drive.

K. Shall be designed to evenly distribute spray water over the wet deck section to provide maximum heat transfer efficiency. Spray nozzles shall be PVC large orifice, non-clogging design, attached to PVC headers with stainless steel clamps. Nozzles shall spray water in a full 360-degree spray pattern for maximum distribution. Internal piping and fittings shall be made entirely of schedule 40 PVC for maximum corrosion protection. Spray header(s) shall extend outside the casing and be provided with removable cap(s) for use in flush cleaning the piping from outside the unit. The water recirculation pump shall be close-coupled, centrifugal type with mechanical seal and located on the tower skid for easy access. A minimum 1 HP open drip proof type pump motor designed for

outdoor service with a 1.15 service factor. The sump pan shall be equipped with a minimum 3 inch combination drain/overflow connection.

L. Accessories

1. Stainless steel casing.
2. Stainless steel casing, with remaining parts epoxy painted over G-210 steel.
3. Premium efficiency and/or two-speed motors.
4. Dual motor system for reduced energy consumption and noise.
5. NEMA 12 Control/Starter panel. U.L. listed, factory installed and tested.
6. Factory installed sump water heater with low water cut-off and thermostat.
7. Automatic modulating fan damper for precise energy and capacity control. Temperature or pressure sensing control.
8. Factory installed chemical water treatment system. Includes controller, solenoid bleed valve and chemical feed pump.
9. Positive closure discharge dampers for reducing heat loss during wintertime conditions.
10. Insulation of sump pan or coil casing.
11. Vibration isolation system.
12. Electric water level package for precise control and accuracy of make-up water.
13. Heavy wall copper tubing from .025 to .049 thickness.
14. External headers for easy coil reconfiguration.
15. Multiple, split circuiting for a variety of condensing or cooling designs.
16. Subcooling coil.

M. Emergency discrete spray system that provides back-up in case of pump failure. Manual or automatic change-over control.

PART 3 - INSTALLATION

3.1 COOLING TOWER

A. Install in accordance with manufacturer's instructions.

B. Install tower on structural steel beams as instructed by manufacturer.

C. Install tower on vibration isolators and Seismic restraint. Refer to Section 230548.

D. Connect condenser water piping with flanged connections to tower. Pitch condenser water supply to tower and condenser water suction away from tower.

E. Connect make-up water piping with flanged or union connections to tower. Pitch to tower.

3.2 FIELD QUALITY CONTROL

A. Test for capacity under actual operating conditions in accordance with CT1 ATC-105 and verify specified performance.

3.3 STARTING EQUIPMENT AND SERVICES

A. Inspect tower after installation and submit report prior to start-up, verifying installation is in accordance with specifications and manufacturer's recommendations.

B. Supervise rigging, hoisting, and installation.

C. Start-up tower in presence of and instruct Owner's operating personnel.

END OF SECTION 236500

SECTION 23 7323 – FACTORY BUILT-UP AIR HANDLING UNITS

PART 1 - GENERAL

1.1 RELATED DOCUMENTS

A. Drawings and general provisions of the Contract, including General and Supplementary Conditions, Section 230500 and other Division 1 Specification Sections, apply to this Section.

B. LEED Building General Requirements: The Owner requires the Contractor to implement practices and procedures to meet the project's environmental performance goals, which include achieving LEED Certification. Specific project goals that may impact this area of work include: Use of recycled-content materials; use of locally-manufactured materials; use of low-emitting materials; construction waste recycling; and the implementation of a construction indoor air quality management plan. The Contractor shall ensure that the requirements related to these goals, as defined in the sections below, are implemented to the fullest extent. Substitutions, or other changes to the work proposed by the Contractor or their Subcontractors, shall not be allowed if such changes compromise the stated LEED Building Performance Criteria.

1. Comply with LEED (Leadership in Energy and Environmental Design) Green Building Rating System BD+C, Version 3.

1.2 WORK INCLUDED

A. Furnish and install all factory built-up air handling units. This shall include all piping, ducts and supports specified in this Division and as shown on the drawings

B. All units shall be new and manufactured for the specific purpose of providing conditioned air (heating and cooling) to the systems indicated.

C. All system components shall be installed in accordance with local codes including seismic isolation.

D. Secure all permits and local/state approval for the components as specified and included under this Section.

E. Each unit shall be seismically certified and labeled in accordance with the International Building Code.

1.3 RELATED SECTIONS

A. Examine all drawings and criteria sheets and all other Sections of the Specifications for requirements which affect work under this Section whether or not such work is specifically mentioned in this Section.

B. Refer to Section 230548 – Mechanical Vibration Controls.

C. Section 017419 “Construction Waste Management and Disposal” for requirements related to construction waste management and disposal at the project site.

D. Section 018113 “VOC Limits for Adhesives, Sealants, Paints and Coatings” for restrictions of VOC in adhesives, sealants, paints and coatings.

E. Section 018119 “Construction Indoor Air Quality (IAQ) Management” for requirements during construction for indoor-air-quality management.

1.4 REFERENCES

A. Applicable provisions of the following Codes and Trade Standard Publications shall apply to the work of this Section, and are hereby incorporated into, and made part of the Contract Documents.

B. Material standards shall be as specified or detailed hereinafter and as follows:

1. ABMA STD 9 – Load Ratings and Fatigue Life for Ball Bearings.

2. ABMA STD 11 – Load Ratings and Fatigue Life for Roller Bearings.

3. AMCA 99 – Standards Handbook.

4. AMCA 210 – Laboratory Methods of Testing Fans for Rating.

5. AMCA 300 – Reverberant Room Method for Sound Testing of Fans.

6. AMCA 301 – Methods for Calculating Fan Sound Ratings from Laboratory Test Data.

7. AMCA 500 – Test Methods for Louvers, Dampers and Shutters.

8. ARI 410 – Standard for Forced-Circulation Air-Cooling and Air-Heating Coils.

9. ARI 430 – Standard for Central-Station Air-Handling Units.

10. ARI 610 – Central System Humidifiers.

11. ARI Guideline D – Application and Installation of Central Station Air-Handling Units.

12. NEMA MG 1 – Motors and Generators (1).

13. NFPA 70 – National Electrical Code.

14. SMACNA (DCS) – HVAC Duct Construction Standards – Metal and Flexible.

15. UL 900 – Standard for Air Filter Units.

16. UL 1096 – Electric Central Air Heating Equipment.

1.5 SYSTEM DESCRIPTION

A. Furnish and install complete factory built-up air handling units of the size and capacity scheduled on the drawings.

B. The units shall be of one manufacturer and shall include all components hereinafter specified including fans, coils, filters, dampers and complete double wall insulated cabinets.

1.6 SUBMITTALS

A. See Section 230500 and General Condition for additional submittal requirements.

B. Shop Drawings: Provide capacity and dimensions of manufactured products and assemblies required for this project. Indicate electrical service with electrical characteristics and connection requirements and duct connections.

C. The unit manufacturer shall submit without delay after receipt of notice of award, shop drawings for approval which shall indicate, but not be limited to, the following information in detail:

1. Point by point. Specification compliance specification.

a. This shall include this section of the specification and all other applicable sections clearly indicating compliance on a line by line basis.

b. This shall not reference “others” If someone else is doing the work it shall state who is doing the work.

2. Structural loading plan.

3. Detailed drawings and data of all proposed components.

4. To scale dimensional drawings (plans and sections) of the entire air handling unit showing all component locations, equipment arrangements, piping connections and sizes, duct connections and sizes, and all safing required.

5. Casing and hoisting details including floor structures, internal structures, panel fabrication, insulation material, equipment supports and thermal, acoustic and air pressure performance of proposed panels. Location of drains and method of piping penetration and sealing of penetrations through the casings.

6. Sound data for sound attenuators at rated flow and sound data for casing walls, floor and roof.

7. The sound power levels on all fans, fan and motor efficiency, horsepower, RPM and fan size.

8. Fan curves shall be submitted. Fan curves shall be prepared and submitted indicating performance of the fans. Where fans are indicated to be controlled by

variable speed drives, submit performance curves based on fans rpm at 100% with design static pressure and at 50% of fan with 3.5” in static pressure.

9. Subway type, steel grating at airflow openings in the unit floor to protect personnel, elevated 6" above the opening.

10. ARI certified calculations for coil selections.

11. List of proposed component manufacturers and models, such as fans, casing, coils, humidifiers, filters, dampers, controls, door hinges, disconnect switches, etc.

12. Structural calculation indication and compliance with performance data.

13. Pressure drop calculation indicating losses of all components, plenums, contractions, expansions at rated flow of unit. Pressure drop calculations are to be submitted in tabular form and shall indicate the total of all unit-associated losses plus the scheduled external static pressure. Calculations are to be based upon wet cooling coils and filters at recommended dirty change out pressure drop.

14. Detailed motor data for the motors to be supplied.

D. Manufacturer’s Instructions: Indicate assembly, support details, connection requirements and include start-up instructions.

E. Operation and Maintenance Data: Include manufacturer’s descriptive literature, operating instructions, installation instructions, maintenance and repair data and parts listing.

F. Warranty: Submit manufacturer’s warranty and ensure forms have been filled out in Owner’s name and registered with manufacturer.

G. No fabrication shall occur until shop drawings are reviewed and accepted by the Engineer.

1.7 QUALITY ASSURANCE

A. Manufacturer Qualifications: Company specializing in manufacturing the type of products specified in this section, as pre-qualified and in accordance with technical specifications herein.

B. Products Requiring Electrical Connection: Listed and classified by Underwriters’ Laboratories, Inc. as suitable for the purpose specified and indicated.

C. The units, as a complete unit, shall be ETL or equivalently labeled.

D. Unit panels shall be labeled with the withstand rating SCCR and it shall be 100,000 AIC.

1.8 DELIVERY, STORAGE AND HANDLING

A. Cleanliness

1. Cleanliness

a. During manufacturing
b. During shipping
c. During storage
d. During field reconnection
e. During start up

2. Unit interior and exterior shall be fully cleaned prior to start-up by the Contractor.

3. Units shall be protected during shipping and while in storage.

4. Once the units are received by the contractor, it shall be the contractor's responsibility to take whatever steps are necessary to deliver the units in like new condition upon start-up and turn-over to the Owner, whichever occurs the latest.

B. Manufacturing

1. Casings shall be manufactured only after all panel components (structural members, facing sheets, etc.) have been thoroughly cleaned of any mill grease, oxidation, etc.

2. The interior and exterior of the casing system shall be thoroughly protected from contamination from the manufacturing process through start-up procedures and Owner's acceptance.

3. Internal components (fans, coils, air filter frames, etc.), shall be free of all grease and dirt.

4. In general, any products such as caulks, gaskets, etc., employed within the unit shall be non-petroleum based products with no outgasing characteristics.

5. Units shall be manufactured level.

C. Shipping

1. Shipping protection shall be provided such that both the interior and the exterior of each unit are protected from road dirt exposure during shipment. This protection shall remain on the unit until unit start-up is performed.

2. Any units damaged in shipment shall be returned to the factory for all corrective work. A representative of the manufacturer shall accept or reject the shipment.

D. On-Site Storage

1. If equipment is to be stored before use, the unit manufacturer shall have provided adequate protection at the factory to ensure that Cleanliness Standards for both the unit interior and unit exterior are met. This protection shall remain on the unit until such time as unit start-up is performed. Accommodations shall be made by the contractor to rotate fan assemblies on a periodic basis as recommended by the fan manufacturer. Fan assemblies shall be rotated without compromising Cleanliness Standards.

2. The unit interiors will not be compromised by their use for tool storage or any other type of storage during the construction of the project. This requirement is mandatory.

3. Provide commonly keyed locks on all unit access doors to eliminate misuse of unit.

E. Rigging

1. The Contractor shall be responsible for rigging under the direct supervision of the unit manufacturer.

F. Field Reconnection

1. Any and all shipping splits requiring field reconnection shall be made by the Contractor under the direct supervision of the air handling unit manufacturer.

2. The unit manufacturer shall supply all necessary gasketing, sealant, installation instructions and supervision.

3. Unit Touch-Up Painting: The contractor shall provide labor and the unit manufacturer shall provide touch-up paint as required to ensure that the appearance of each unit complies with these specifications.

G. Leveling

1. The Contractor shall level all unit sections in accordance with the unit manufacturer's instructions. The contractor shall furnish and install all necessary permanent shim material to assure the levelness of the individual sections and the entire assembled unit.

1.9 WARRANTY

1. The unit manufacturer shall be responsible for and warranty the proper operation and performance of the units, all unit components, leak tightness and non-condensation of the unit casing, structural integrity of the unit including all provisions required for rigging, trucking and installation of units in the areas indicated on the drawings. Units shall be guaranteed for 1 year from date of acceptance of project by owner.

PART 2 - PRODUCTS

2.1 DOUBLE WALL BUILT-UP SUPPLY AIR HANDLING UNIT

A. General

1. Acceptable manufacturers subject to compliance with the specification:

   1) Haakon

   2) Buffalo Air Handling

   3) Climate Craft

   4) Air Enterprises

2. Provide factory fabricated air handling units with components as indicated and scheduled on the drawings, to provide the services designated.

3. Close coordination shall be exercised between the contractors and the unit manufacturer, to ensure that the unit is provided complete with all operating dampers, operators, isolation dampers, detectors, etc.

4. Units shall be suitable for indoor or outdoor installation as required by location.

5. <u>Contractor designed field erected or assembled air handling units shall not be acceptable or considered as equal.</u>

6. The unit manufacturer shall design provisions for any special requirements such as structural columns being installed through the unit.

7. Bidding manufacturers shall advise Engineer early in the bidding time frame of any problems in meeting the scheduled requirements or unit overall dimensions shown on the drawings.

8. The Contractor shall submit complete detailed assembly and component shop drawings prior to fabrication, assembly and installation of any part, portion or component of the unit.

9. The word "unit" shall mean each unit and all work associated for each unit, for the total quantity of units scheduled on the drawings.

10. The air handling unit components shall be fit together and seal properly.

11. The unit start-up and testing shall be performed by the unit manufacturer and shall be included under this Contract.

12. Unit shall be fabricated and assembled in modules in the unit manufacturer's plant or factory. Each of the units shall be assembled, sealed and tested at the factory prior to shipment.

B Unit Construction

1. Unit housing performance

a. Minimum R value 8

1) Minimum insulation density 3 lbs. per square foot.

b. Provide thermal break construction between all interior and exterior surfaces.

1) Under normal internal operating conditions there shall be no condensation on the exterior of the unit at the following conditions:

97ºF DB 77ºF WB

c. Maximum deflection of walls shall be L/250 at ±8" w.c. (L = span in inches). Span may be reduced by adding additional supports. Deflection is worst case at the center of panel.

d. Maximum deflection of roof and floor shall be L/360 at design loading (L = span in inches).

1) Minimum floor design load 150 lbs. per square foot.

e. Component equipment shall also be labeled such as fans.

f. Stacked units shall consider the weights of all upper units in calculating structural loading of the lower units in addition to catwalk and ladder supports.

g. Leakage class shall be 3.0 at ±8 inches w.c. At that pressure, the maximum leakage shall be 15.0 CFM per 100 square foot of surface of the unit.

h. Unit minimum panel sound transmission loss shall be equal to or greater than:

Octave Band Hz	DB Reduction	Octave Bank Hz	DB Reduction
125	30	1000	46
250	42	2000	53
500	40	4000	52

j. Materials

1) Exterior

a) Painted galvanized steel.

2) Interior

a) Solid painted galvanized steel for coil/humidifier section.

b) Perforated painted galvanized for all other sections. Provide liner to prevent air contact with insulation.

k. Paint:

1) Two coats of primer

2) Two coats of enamel

2. Minimum wall thickness shall be 2”.

3. Floor/Base Frame

a. The floor of each unit section shall be 1/8” aluminum diamond safety plate. Floor shall be continuously welded to form a guaranteed waterproof surface. The waterproof floor shall <u>not</u> be used as part of a coil drain pan/collection system. Overall floor thickness shall be a minimum of 6" and shall incorporate a solid galvanized or aluminum underliner.

b. Base shall be constructed from welded minimum 10-guage clear-coated galvanized steel channels around the perimeter and welded minimum 10-guage clear-coated galvanized steel cross members. The height of each base channel shall be no less than the height indicated in the drawings. Each shipping section shall be provided with removable lifting lugs. Structural framework shall fully support the unit casing and all components during installation such that no section deflects more than L/1000 during rigging of that section, where L is defined as the distance between lifting lugs.

c. All openings in the floor of the units shall be dammed a minimum of 3" high.

d. The underside of the floor shall be insulated with 6" thick, 3 lb. density fiberglass, sealed in place by a metal underliner.

4. Walls and Roof

a. Wall assemblies shall be 2” thick double-wall construction with galvanized steel solid exterior and galvanized steel interior. The entire unit shall have a solid wall liner on the interior. All spaces and joints of wall assemblies shall be completely sealed. Wall shall meet the casing deflection limits contained herein.

b. A Class “B” thermal break shall be provided throughout the entire wall assembly. A Class “B” thermal break shall be defined as a thermal break

that ensures no member on the exterior of the unit, excluding fasteners, has through metal contact with any member on the interior of the unit, excluding fasteners.

c. Insulation that meets a minimum R-value of 8 shall be provided throughout all unit wall assemblies. Insulation shall completely fill the panel cavity in all directions so that no voids exist and settling of insulation is prevented. Wall assemblies shall comply with NFPA 90 A.

d. Removable wall access panels shall be provided in coil and fan sections for service removal of components.

5. Access Doors and Panels

a. Provide access doors of the same construction and thickness as the unit casing for all unit sections containing equipment requiring service, where dampers or damper operators are installed, or areas for cleaning of unit components such as coils, etc., is required. Access doors shall be equipped with continuous gaskets and shall fit in the door frame in a manner to guarantee 0% leakage at design pressure. Access door materials shall match casing material.

b. Each access door shall be mounted with stainless steel hinges to prevent door racking and air leakage. At least (2) cast aluminum chrome plated handles operable from either side shall be provided. Other door accessories shall include handles and stainless steel hardware to ensure long-term, proper door operation.

c. Each door shall contain a thermal window of double pane safety glass at eye level when the viewer stands on the adjacent floor or grating outside the unit (coordinate with heights of housekeeping pads, vibration isolators, etc.), sized at a minimum of 12" by 12", properly sealed to operate safely against the suction or pressure. Windows shall be non-fogging.

d. Removable access panels shall be provided in unit sections where components are larger than the door opening. Panels shall be of the same construction as doors.

6. Roof

a. Unit roof performance shall be as specified above for unit housing, modified as follows:

1) All exterior air handling unit roofs

a) Shall be pitched a minimum of ¼" per foot for drainage.

b) Roof may be part of the unit or the manufacturer may elect to provide a secondary roofing system above the unit roof.

c) Outer most roof shall be a color to match the unit.

d) If the unit top is the roof, the final roof shall be 60 mil EPDM roofing. Roof to be tested to assure 0% leakage prior to installing EDPM material.

e) Roof shall be 100% watertight.

f) Lifting lugs and rail for equipment removal shall be coordinated with unit top or roof.

g) All roofs shall be suitable for walking on and snow loads.

h) Roof shall be designed for earthquake loads and wind loading as well as other equipment imposed loads.

i) Provide written 20-year warranty for roofs.

7. Ladders and walkways and handrails

a. Provide OSHA and ANSI approved handrails, walking surfaces, toe guards, safety cages, stairs and ladders.

1) As indicated or noted on the drawings.

2) As specified.

3) As required for service of equipment.

b. They shall be galvanized with non-skid surfaces.

c. Coordinate with all piping, ductwork, coil pull, equipment removal and other services.

8. Coils

a. See section 238216

b. Provide a separate (1" minimum) drain from each pan under each coil down to the bottom pan near its drain. All drain pans shall have bottom outlets. All drain pans are to be designed to drain completely and leave no puddles or standing water.

c. Where drain pans are recessed into the floor of the units provide a non-corrosive, non-slip walk surface flush with the floor of the unit. Recessed drain pans to have minimum of R-8 insulation between lowest point of drain pan and underliner.

d. All coils shall be mounted to allow removal of any coil individually without disturbing any other coils. Allow sufficient space for individual

isolation valves for inlet/outlet of each coil piping and all other equipment shall be mounted in a manner as such that they do not preclude coil removal.

1) Unit Manufacturer shall provide a detailed dimensioned piping drawing for all internal unit piping whether provided or not. Provide penetration and seals in accordance with drawing.

2) Provide a label inside and outside of the unit with clear and complete instructions for cleaning up stream and down stream sides of cooling coil.

e. All cooling coils supports shall be stainless steel.

f. Drain pans shall be welded Type 304 stainless steel, minimum 18 gauge. Drain pan shall be fastened to the aluminum floor using a caulked and fastened standing seam joints.

g. Each cooling coil drain pan including intermediate drain pans.

1) The minimum drain pan size shall be from the leading face of the coil to a distance down stream from the leaving face of one half of the total assembled height of the water producing height or written certified guarantee verified by testing that the water carryover beyond the drain pan is less then 0.0044 oz per square foot at the peak design dew point and peak design air velocity

h. Drain pan slope:

1) Pan shall slope at a minimum of 1/8 in. per foot from the horizontal towards the drain outlet.

2) Drain pan outlet shall be at the lowest point or points of the pan with sufficient size to prevent overflow under any normal expected operating condition.

3) Unit manufacture shall provide a drawing indicating the seal trap in accordance with the contract detail and verify the trap will fit with the unit sitting on a 4 inch thick house keeping pad. If the trap does not the unit base shall be increased in height to a point at which the trap will fit.

i. The air velocity across the cooling coil shall not vary by more than 15% across the cooling coils.

9. Supply fans shall be:

a. See specification section 233900 fans.

b. All fan motors shall be non-overloading.

c. Centrifugal Plenum Fans

1) With variable speed drivers, see Section 230514

10. Return fans shall be:

a. See specification section 233900 fans

b. All fan motors shall be non-overloading.

c. Centrifugal Plenum Fans.

11. Dampers

a. Acceptable manufacturers subject to compliance with specifications.

1) Ruskin

2) Tamco

3) Greenheck

b. The unit manufacturer shall provide all dampers at units (outside air, return, exhaust, isolation, etc.).

c. Damper operators shall be provided in the field by the ATC Contractor except as noted below.

d. Smoke and isolation dampers:

1) Shall be industrial grade equal to Ruskin SD102.
2) Suitable for maximum system pressure, of 12.0" w.g. to 48" damper width.
3) UL555S Leakage Class 2.
4) These dampers shall be UL listed smoke dampers complete with actuators.
5) Construction aluminum or 316 Stainless Steel.
6) Provide additional structure as required to meet deflection criteria.

e. All other dampers shall be equal to Ruskin CD-102.

1) Provide air foil double T hinges opposed blade damper.
2) Braced and sized to withstand ±12 inches w.g.
3) Shall be industrial grade equal to Ruskin CD-102.
4) At 12 inches w.g. shall allow a maximum width of 48” per section.
5) Maximum leakage shall be 8 CFM per square foot at 48” x 48” size.
6) Damper shall be provided with operator.
7) Construction shall be aluminum or 316 Stainless Steel.

f. Smoke damper shall be UL555S rated and shall be sized to as not to exceed their rated velocities or pressure ratings.

g. All hardware shall be stainless steel.

12. Drains

a. Provide drain pans for:

1) Each cooling coil
2) Outside air intake
3) Humidifier Section

13. Additional Drains

a. Provide each section with a 1-1/4" drain.
b. Pipe to outside unit with standard weight galvanized pipe.
c. Cap each section drain with a schedule 40 galvanized cap.
d. Each unit drain shall have a removable strainer cap.

14. Filters

a. Provide prefilters and after filters complete with gauges, of types as shown and scheduled.

b. See specification section 234100.

15. Filter Gauge

a. See Specification Section 234100.

16. Heat pipe

a. Heat pipe shall be manufactured by Heat Pipe Technology, Des Champs or Colmac.

b. Heat Pipe piping and circuitry shall be as specified by HPT design. Each circuit shall be individually charged and hermetically sealed.

c. The tubes shall be copper permanently expanded onto the fin collar to form a firm rigid and complete pressure contact.

d. Refrigerants used shall be R134a.

e. The fin surface shall be continuous plate type aluminum.

f. Heat pipe frames shall be 20 gauge stainless steel.

g. The supply and exhaust air steams shall be isolated from each after by a foam filled double separating partition.

17. Space Limitations

a. The air handling units shall be designed within the dimensions and space limitations, as indicated on the drawings and as specified.

b. The unit manufacturer shall take these dimensions and space limitations into consideration for the design required and shall submit dimensional data on the drawings.

c. Advise the engineer early in the bid process should any problems be detected with existing space limitations.

18. Electrical Interface/Work

a. Provide a complete factory wired electrical system for each unit, so as to allow single-source responsibility and to ensure proper selection and installation of all electrical components.

b. The unit manufacturer shall provide prewired and switched non-corroding vaportight fluorescent lights in each compartment that has an access door and in the service corridors as follows:

1) Lights shall be equal to Appleton 4'-0" FRS Series, suitable for use in wet and damp locations.

2) Lighting, internal wiring, switching mounted in bell boxes, and all other electrical wiring associated with the lighting shall be provided by the unit manufacturer, at the factory.

3) Lights shall have 120 volt cold weather (-20°F) ballasts and shall comply with UL 1570 and shall carry the UL label.

c. Provide duplex 20-amp electrical outlets with ground fault intervention suitable to be utilized for power tools.

1) Unit manufacturer shall provide (2) 120 volt, single-phase 20-amp electric connections for the lights and receptacles (separate circuit for lights, receptacles), via junction boxes with circuit breakers for connection in the field by the Electrical Contractor (20 amperes power supply).

d. The air handling unit manufacturer shall provide a non-fused safety disconnect switch (with interlocking contactors to be wired back to VFD) for each fan wired to the fan. Power wiring from the power source to the fan disconnect switch shall be provided by the Electrical Contractor under Division 26.

e. Coordinate location and switching arrangement to ensure that layout shown on the drawings is followed strictly. Lighting system for each unit shall be wired through switches and extended to a terminal block at the

side, one at each end of the unit, of each unit ready to accept 120V power. Provide (2) 3-way light switches for each AHU to activate all of the lights inside the unit sections that have access doors on that "side" of the unit from either switch. Provide similar switching arrangement for any piping spaces provided.

f. All unit splits shall be pneumatic with MC Cable.

1) Shall comply with NEC 300.22.
2) Shall be suitable for indoor and outdoor locations.
3) Shall be suitable for wet locations

g. All sections shall be illuminated by lighting, including piping corridors when provided.

h. Wiring and Conduit (By Unit Manufacturer)

1) The unit wiring shall be No. 12 GA minimum stranded copper wire sheathed in a THHN covering, which will be distributed through the unit in Rigid steel conduit IMC or EMT.

a) The use of aluminum wire or flexible BX cable is prohibited.

2) To allow for adjustment of fan motors provide:

a) 3'-0" section of MC Cable shall be provided at each motor.

b) MC Cable shall:

(1) Shall comply with NEC 300.22.
(2) Shall be suitable for indoor and outdoor locations.
(3) Shall be suitable for wet locations

3) Enclosures

a) Outdoor electrical enclosures shall have a NEMA 3R rating.

b) Indoor enclosures shall be rated NEMA 12.

4) In addition to requirements outlined herein, all wiring shall comply with:

a) NEC requirements.

b) Division 26 of this specification.

19. Space Limitations

a. The air handling units shall be designed within the dimensions and space limitations, as indicated on the drawings and as specified.

b. The unit manufacturer shall take these dimensions and space limitations into consideration for the design required and shall submit dimensional data on the drawings.

c. Advise the engineer early in the bid process should any problems be detected with existing space limitations.

PART 3 - EXECUTION

3.1 EXAMINATION

A. Verify that the mechanical rooms and roof are ready to receive work and opening dimensions are as indicated on the shop drawings and contract documents.

B. Verify that proper power supply is available prior to starting of fans.

C. Verify that housekeeping pads are level.

3.2 INSTALLATION

A. Install in strict accordance with manufacturer's instructions.

B. Install on a level base and level units.

C. Install in accordance with NFPA 90A.

D. Locate remote panels where indicated on drawings or as directed by the Architect.

E. Pipe the fan section drain to lab waste. Pipe the drain pan section to lab waste.

3.3 STARTING EQUIPMENT AND SYSTEMS

A. Provide initial start-up and shut-down, including routine servicing and check-out.

B. Unit Manufacturer's Representative / Start-Up Services

1. Each individual unit interior and exterior shall be inspected and reviewed by the unit manufacturer's representative, before start-up. The unit manufacturer shall supervise the installation of final filters, the removal of all component shipping blocks, removal of any and all interior and exterior cleanliness protection, and the removal of any duct covering protection. Units shall then be started-up by the unit manufacturer in conjunction with the contractor. Start-up shall include run testing the fan, and confirming the vibration parameters, etc., of the fan assembly, all per submitted test procedures. The unit manufacturer shall submit a written start-up report to the architect.

2. The unit manufacturer shall supervise the unit erection. This manufacturer's representative shall perform start-up, checkout and testing of each unit, witness field testing, and instruct the Owner's representatives of the use and maintenance

of the individual components and entire unit. These services shall be part of the unit manufacturer's bid and shall be provided at no extra cost.

3.4 FACTORY TESTING

A. Each unit shall be tested by the unit manufacturer prior to shipping, as follows:

1. Factory full load flow Test:

a. Air volume and static pressure test shall verify that the air volume is within the range of 100% to 110% of scheduled nominal CFM requirements when operating at design static pressure.

b. The test for airflow and static capability shall include airflow measuring devices installed in all ducts returning to or leaving the unit.

c. These devices shall be installed in accordance with the measuring device manufacturer's recommendations.

d. Pressures external to the unit shall be simulated using a combination of ducts and dampers.

e. The tests shall prove design airflow and static capability of the complete assembled unit.

2. Factory 50% load flow Test:

a. In addition test all VAV units at a 50% turn down with 3.5” static.

b. Procedure similar to factory full load flow test.

3. Factory Test: Casing leakage

a. Tests shall be run to prove that unit casing leakage is leakage Class 3 at ±6" w.c. Test shall be in accordance with SMACNA.

b. The unit shall be tested on the positive side of the fan septum wall to +6" w.c. and on the negative side to -6" w.c. in two tests (not at the same time).

c. The leakage of both tests is to be summed (added) to derive the total unit leakage.

d. Factory test shall meet the specified valves.

e. The use of any temporary caulking at any permanent panel joints is unacceptable.

f. Temporary test caulking shall be utilized at the unit shipping splits to simulate "as installed" conditions.

4. Factory test unit casing deflection

   a. Test unit casing deflection at 6" positive pressure and 6" negative pressure and measuring deflection with dial micrometer gauges.

   b. All measurements to be made at center of span, center of panel. Note if there are additional supports center span may not be center of panel.

5. Factory Test Sound

   a. System sound power levels shall be measured in all none (9) octave bands (31.25 Hz through 8000 Hz) at system design operating conditions.

      1) Airborne sound power levels at all openings shall be read in the test ductwork 5'-0" from the openings.

      2) Transmitted sound power levels shall be read 5'-0" from the outside of the fan section.

   b. Sound tests shall be conducted while the unit is running at design conditions. An octave band sound pressure level reading shall be taken at:

      1) Outside louver.
      2) Exhaust louver.
      3) Supply discharge opening.
      4) Return air opening, economizer opening.
      5) Adjacent to each fan section outside of the unit casing.

6. Factory Test Vibration:

   a. Each individual fan shall be tested for vibration in X-Y-Z directions at the manufacturer's facility before shipment to the unit manufacturer to assure that specified fan balancing criteria is adhered to.

   b. Unit manufacturer shall test each fan in operation as installed in the unit.

      1) Vibration Test

         a) Centrifugal fan

            (1) Each fan shall be fully assembled with motor and drive on a structural steel base and run tested at the factory prior to shipment of the unit.

            (2) Testing shall be conducted at the operating speed or maximum fan class speed.

            (3) The amplitude of vibration (displacement in mils) at operating speed measured at each unit fan bearing shall not exceed the values given in the following table:

(4) Maximum allowable:

Fan RPM	Displacement Mils
500	4.2
800	3.0
1100	2.3
1400	1.9
1700 or Greater	1.6

7. Deficiencies

a. Any deficiencies in unit performance must be corrected by the unit manufacturer in the manufacturing plant prior to shipping.

8. Test Procedures

a. A complete test procedure shall be submitted for approval and shall include:

1) Detailed the methods.

2) All equipment to be employed for each specific test

3) All techniques to be employed for each specific test.

4) A copy of all instrument certifications shall be submitted and shall include as a minimum:

a) All air flow measuring devices.
b) Acoustical meters.
c) Vibration meters.
d) Pressure measuring devices.
e) Electrical meters.
f) Dial measurement gauges.

5) Equipment will not be considered approved until written approval of testing procedures is reviewed.

3.5 FIELD TESTING

A. Field Pressure Test:

1. Pressurized leak testing shall be performed in the field after assembly of the unit sections by the contractor at ±6". The unit manufacturer shall correct and/or pay for the repair of all deficiencies as compared to factory test results found during testing. The Contractor shall provide all field labor necessary to join the unit sections, including all electric and drain splits after they are delivered to the site and set in place. All field work shall be provided under the direct supervision of a qualified engineer employed by the unit manufacturer. Rigging for unit sections

shall be provided by the contractor. This test shall be performed within 2 weeks of the unit assembly and placement.

B. Drain Pans

1. Test

a. Check drain trap for seal

b. Plug pan

c. Flood drain pans with water to near top of drain pan

d. Pull plug with fan operating

2. Acceptable results:

a. Shall drain completely in 3 minutes or less

b. Trap seal still functional

c. After three minutes NO puddles shall remain in the pan larger then 2 inches in diameter and no more then 3mm deep.

C. Vibration Testing

1. All fans

2. All VFD driven fans throughout the range of control.

END OF SECTION

SECTION 23 8216 – COILS

PART 1 - GENERAL

1.1 RELATED DOCUMENTS

A. Drawings and general provisions of the Contract, including General and Supplementary Conditions, Section 230500 and other Division 1 Specification Sections, apply to this Section.

B. LEED Building General Requirements: The Owner requires the Contractor to implement practices and procedures to meet the project's environmental performance goals, which include achieving LEED Certification. Specific project goals that may impact this area of work include: Use of recycled-content materials; use of locally-manufactured materials; use of low-emitting materials; construction waste recycling; and the implementation of a construction indoor air quality management plan. The Contractor shall ensure that the requirements related to these goals, as defined in the sections below, are implemented to the fullest extent. Substitutions, or other changes to the work proposed by the Contractor or their Subcontractors, shall not be allowed if such changes compromise the stated LEED Building Performance Criteria.

1. Comply with LEED (Leadership in Energy and Environmental Design) Green Building Rating System BD+C, Version 3.

1.2 WORK INCLUDED

A. Provide coils of size, capacity, location and type shown and scheduled on the drawings and as hereinafter specified.

B. Coil capacities, pressure drops and selection procedures shall be certified in accordance with ARI 410 (latest edition).

C. Furnish and install coils to make a complete and operational system.

D. All equipment shall be new and shall be of the type, style, size and capacities as scheduled.

1.3 RELATED SECTIONS

A. Examine all drawings and criteria sheets and all other Sections of the Specifications for requirements which affect work under this Section whether or not such work is specifically mentioned in this Section.

B. Section 017419 "Construction Waste Management and Disposal" for requirements related to construction waste management and disposal at the project site.

C. Section 018113 "VOC Limits for Adhesives, Sealants, Paints and Coatings" for restrictions of VOC in adhesives, sealants, paints and coatings.

D. Section 018119 “Construction Indoor Air Quality (IAQ) Management” for requirements during construction for indoor-air-quality management.

1.4 REFERENCES

A. Applicable provisions of the following Codes and Trade Standard Publications shall apply to the work of this Section, and are hereby incorporated into, and made a part of the Contract Documents.

B. Material standards shall be as specified or detailed hereinafter and as following:

1. ARI 410 – Forced-Circulation Air-Cooling and Air-Heating Coils.
2. SMACNA (DCS) – HVAC Duct Construction Standards, Metal and Flexible.
3. NFPA 70 – National Electrical code.

1.5 SUBMITTALS

A. See Section 230500 and General Conditions for additional requirements.

B. Product Data: Provide typical catalog of information including arrangements.

C. Provide ARI Calculations.

D. Manufacturer’s Instructions: Indicate installation instructions and recommendations.

E. Provide detail drawings and each coil and recommended installations.

F. Project Record Documents: Record actual locations of components.

G. Operation and Maintenance Data: Include manufacturer’s descriptive literature, operating instructions, installation instructions, maintenance and repair data and parts listings.

H. Warranty: Submit manufacturer’s warranty and ensure forms have been completed in Owner’s name and registered with manufacturer.

1.6 QUALITY ASSURANCE

A. Manufacturer Qualifications: Company specializing in manufacturing the Products specified in this section with minimum five (5) years of documented experience.

B. Products Requiring Electrical Connection: Listed and classified by Underwriter’s Laboratories Inc. testing firm acceptable to the authority having jurisdiction and suitable for the purpose specified and indicated.

1.7 PRODUCT, STORAGE AND HANDLING

A. Delivery of materials shall be made to the project by the materials supplier in accordance with the instructions to the Contractor.

B. The Contractor shall provide adequate locked storage space and shall be responsible for all items of materials after receipt from the supplier, and shall replace all materials lost or damaged after delivery and receipt.

PART 2 - PRODUCTS

2.1 STEAM COILS

A. VIFB (Steam heating coils with internal face and bypass dampers)

1. Acceptable manufactures subject to compliance with the specifications shall be as follows:

   a. Aerofin
   b. Wing
   c. Control Air

2. Coils shall have vertical tubes, directly draining condensate header, with full steam pressure at all times to ensure maximum freeze protection. Air temperatures shall be controlled by air proportioning through faces and bypasses and by modulation of the heating medium as described hereinafter.

3. On full bypass, the heating coils shall be completely enclosed by close fitting dampers to ensure minimum temperature override.

4. Coils shall have casing panels, dampers and bypass panels made of hot dip galvanized construction for maximum corrosion protection.

   a. Provided with anti-stratification baffles.

   b. Provided with factory mounted pneumatic operator and pilot positioners on each operator (coordinate pressure and control with ATC).

5. Steam manifolds shall be made of Schedule 40 seamless steel pipe on single row steam coils and structural steel rectangular tubing with 1/4" wall thickness on 2-row steam coils.

6. Heating tubes shall be 5/8" o.d. drawn oxygen-free copper, mechanically expanded to produce a bond with the collared aluminum fins for maximum fin efficiency and heat transfer. Top and bottom panels shall be 2-piece for maximum accessibility to tube connections, if required.

7. The entire damper assembly shall be supported on at least (2) support wheels and (8) guide wheels. The support and guide wheels shall provide exact linear motion of the dampers and perfect alignment with fixed casing panels. Support wheels shall have low friction roller bearings. Guide wheels shall have long-life sleeve bearings.

8. Coils shall have direct vertical condensate drainage from the tubes into the condensate manifold to ensure that no part of the tube will be water logged. Tubes shall enter the condensate manifold in the vertical direction. Tube expansion shall be absorbed in 90° bends at the top of each tube.

B. Steam distribution heating coils (non-freeze) shall be manufactured by:

1. Acceptable manufactures subject to compliance with the specifications shall be as follows:

   a. Aerofin
   b. Trane
   c. Carrier
   d. McQuay
   e. York
   f. Heat Craft
   g. TSI

2. Coils shall consist of 16 gauge galvanized steel casing with center and end supports. To ensure structural integrity and allow for easy stacking of coils, casing channels must be constructed with the minimum of four (4) forms each or channels must be constructed from 14 gauge galvanized steel.

3. All coils shall be suitable for pressure up to 200 psig and temperature to 400ºF. Coil performance shall be certified under ARI Standard 410.

4. Steam distributing coils shall have double tube construction with evenly spaced directional kinetic orifices. Orifices must create directional flow that meters steam for uniform leaving air temperature and accelerates condensate removal and increases heat transfer efficiency. Outer tube shall be 5/8" tubes with a minimum thickness of .049"

5. Fins shall be configured aluminum plate type or helical fin. Fins shall be mechanically bonded to the tubes for lasting reliability. Fins shall have a minimum thickness of 0.095".

6. Copper header: Seam defectors must be provided within supply header to ensure equal distribution of steam to each tube and direct the condensate to flow to the outlet.

7. Coils shall be installed in accordance with manufacturer's instruction. Support coil sections independent of piping on steel channel or double angle frames and secure to casings. Provide frames for maximum three coil sections. Arrange supports to avoid piercing drain pans, provide airtight seal between coil and duct or casing. Protect coils to prevent damage to fins and flanges. Comb out bent fins. Install coils level. Make connections to coils with unions and flanges.

2.2 UNIT HOT WATER HEATING AND HOT WATER PREHEAT COILS

A. Acceptable manufacturers subject to compliance with the specifications shall be as follows:

1. Aerofin
2. Carrier
3. York
4. McQuay
5. Trane
6. Heat Craft
7. TSI
8. Precision

B. Fins shall be continuous aluminum configured plate fin type, with full fin collars for accurate spacing and maximum fin tube contact with a maximum (10) fins per inch. Minimum fin thickness shall be 0.095".

C. Tubes shall be copper expanded into fin collars for permanent fin tube bond and expanded into header for leak tight joint at 300 psig air pressure under water. Headers shall be gray cast iron, hydrostatically tested to 400 psi before assembly. All standard coils shall be proof tested at 300 psig and leak tested at 200 psig air under water.

D. Casings shall be 16 gauge, continuous coated galvanized steel with fins recessed into channels to minimize air bypass, with 3/8" holes on 3" centers in top and bottom channels for mounting.

E. Coils shall have rows as scheduled on the drawings, 5/8" o.d., 0.035" thick tubes and same-end connections. Each tube-to-header shall be joint reinforced with brass bushing. Bronze, spring type turbulators shall be provided to attain required capacity at the available GPM and entering water temperature.

F. Coils must be fully drainable.

2.3 IN-DUCT HOT WATER HEATING COILS

A. Acceptable manufacturers subject to compliance with the specifications shall be as follows:

1. Trane
2. Aerofin
3. Heat Craft
4. TSI
5. Precision

B. Water heating coil shall be of the extended surface type, constructed of copper tubing minimum 5/8" o.d., 0.035" thick, and having plate fins of aluminum extending at right angles to the tubes.

C. Tubes shall be pressure bonded into the fin collars by expanding the tubes. No solder bonding shall be used. All copper-to-copper joints shall be made with high temperature silver brazing material.

D. Plate fins shall be corrugated. Fins shall be spaced no closer than (12) per inch integral spacing collars that cover the tube surface.

E. Hot water coils shall be tested for 250 psig, maximum 300°F, and 400 psig air pressure under water.

F. Access doors shall be installed upstream and downstream of coil for cleaning access.

2.4 COOLING COILS

A. Acceptable manufacturers subject to compliance with the specification shall be as follows:

1. Aerofin
2. Carrier
3. York
4. Trane
5. McQuay
6. Heat Craft
7. TSI
8. Precision

B. Primary surface shall be round seamless 0.025" thick, 5/8” o.d. copper tubes on 1 1/2" centers, staggered in the direction of airflow. All joints shall be brazed. Tube bends shall be 0.035 thick.

C. Secondary surface shall consist of aluminum plate type fins for higher capacity and structural strength. Spinal fins will not be acceptable. Fins shall have a minimum thickness of 0.095" with full drawn collars to provide a continuous surface cover over the entire tube for maximum heat transfer with a maximum (10) fins per inch. Bare copper tube shall not be visible between fins. Fins shall have no openings punched in them so as to accumulate lint and dirt. Tubes shall be mechanically expanded into fins to provide a continuous primary to secondary compression bond over the entire finned length for maximum heat transfer rates. Tubes that have been expanded through the use of hydraulic expansion methods will not be acceptable.

D. Casing and tube supports shall be constructed of stainless steel with 3/8" diameter bolt holes for mounting on 8" centers. Casing shall be a minimum of 16 gauge stainless steel, reinforced flange of a minimum of 1½" deep flange.

E. Coil header shall be of copper materials using seamless copper tubing with intruded tube holes to permit expansion and contraction without creating undue stress or strain. Coil size shall be determined by coil manufacturer based upon the most efficient coil circuiting. Vent connections at the highest point to ensure proper venting and drain

connections shall be provided at the lowest point to ensure complete drainage and prevent freeze-up.

F. Coils shall have foam sealing strip located between casing channels and fins along top and bottom to arrest air bypass and water carryover.

G. The complete coil core shall be pressure tested with 315 lbs. air pressure under warm water and shall be suitable for operation at 250 psig working pressure. Individual tube test and core tests before installation of headers will not be considered acceptable. Cooling coils shall be circuited for drainability and for service without removing individual plugs from each tube. Use of internal restrictive devices to obtain turbulent flow will not be acceptable since they prevent complete draining of the coil.

H. The manufacturer shall furnish coil capacities as outlined in the tabulation. Capacities shall be verified with an ARI approved computer selection method.

I. The unit manufacturer shall provide separate drains from pan under each coil section. Drains from multiple, stacked coil pans shall be routed individually to drain outlet, not cascaded from one coil pan to the next lower pan.

J. Cooling coils shall be mounted to allow removal of any coil individually without disturbing any other coils.

K. Drain pans and support members shall be stainless steel. Coil drain pans shall allow for condensate removal upstream or downstream of all coils including recirculation units.

L. Each individual coil module shall have a limited height of up to 36".

M. Coils shall be fully drainable.

2.5 HEAT RECOVERY COILS

A. Shall be he same as cooling coils except the max fin spacing shall be 10 FPI.

PART 3 - EXECUTION

3.1 INSTALLATION

A. Coils shall be installed in accordance with manufacturer recommendations, Contract Drawings, and specifications.

B. Coils shall be installed such that coils can be completely drainable.

C. Coils shall be installed so as to ensure easy accessibility for service or removal and replacement of control valves, shut-off valves, strainers and coils.

D. Each coil shall have a vent at the high point.

E. Provide union at each coil connection.

3.2 CLEANING

A. After construction is completed, including painting, clean exposed surfaces of units.

END OF SECTION

SECTION 23 8235 – TERMINAL HEAT TRANSFER UNITS

PART 1 - GENERAL

1.1 RELATED DOCUMENTS

A. Drawings and general provisions of the Contract, including General and Supplementary Conditions, Section 230500 and other Division 1 Specification Sections, apply to this Section.

B. LEED Building General Requirements: The Owner requires the Contractor to implement practices and procedures to meet the project's environmental performance goals, which include achieving LEED Certification. Specific project goals that may impact this area of work include: Use of recycled-content materials; use of locally-manufactured materials; use of low-emitting materials; construction waste recycling; and the implementation of a construction indoor air quality management plan. The Contractor shall ensure that the requirements related to these goals, as defined in the sections below, are implemented to the fullest extent. Substitutions, or other changes to the work proposed by the Contractor or their Subcontractors, shall not be allowed if such changes compromise the stated LEED Building Performance Criteria.

1. Comply with LEED (Leadership in Energy and Environmental Design) Green Building Rating System BD+C, Version 3.

1.2 WORK INCLUDED

A. Furnish and install all terminal heat transfer units of the type, size and capacity as scheduled.

B. Units shall be UL and AGA listed in accordance with the specific unit's heat transfer design and construction.

1.3 RELATED SECTIONS

A. Examine all drawings and criteria sheets and all other Sections of the Specifications for requirements which affect work under this Section whether or not such work is specifically mentioned in this Section.

B. Section 017419 "Construction Waste Management and Disposal" for requirements related to construction waste management and disposal at the project site.

C. Section 018113 "VOC Limits for Adhesives, Sealants, Paints and Coatings" for restrictions of VOC in adhesives, sealants, paints and coatings.

D. Section 018119 "Construction Indoor Air Quality (IAQ) Management" for requirements during construction for indoor-air-quality management.

1.4 REFERENCES

A. Applicable provisions of the following Codes and Trade Standard Publications shall apply to the work of this Section, and are hereby incorporated into, and made a part of the Contract Documents.

B. Material standards shall be as specified or detailed hereinafter and as following:

1. UL 1025-89 – Electric Air Heaters.

2. UL 1042-86 – Electric Baseboard Heating Equipment.

3. ASHRAE 90.1 – Energy Efficient Design of New Buildings Except Low-Rise Residential Buildings.

4. NFPA 90A – Installation of Air Conditioning and Ventilating Systems.

5. NFPA 90B – Installation of Warm Air Heating and Air Conditioning Systems.

6. NFPA 211 – Chimneys, Fireplaces, Vents and Solid Fuel Burning Appliances.

1.5 SYSTEM DESCRIPTION

A. Furnish and install all radiation, unit heaters, radiant panels, controls, piping, wiring, enclosures, access doors, etc. to make a complete and operational system.

B. All enclosures shall be installed with aligning strips, plaster frames and end trims so as to provide a neat architectural finish.

C. All equipment shall be new and shall be of the type, style, size and capacities as scheduled. All radiation enclosures shall be continuous and of the same finish and style as adjacent enclosures.

1.6 SUBMITTALS

A. See Section 230500 and General Conditions for additional requirements.

B. Product Data: Provide typical catalog of information including arrangements.

C. Shop Drawings:

1. Submit schedules of equipment and enclosures typically indicating length and number of pieces of element and enclosure, corner pieces, end caps, cap strips, access doors, pilaster covers and comparison of specified heat required to actual heat output provided.

a. Indicate cross sections of cabinets, grilles, bracing and reinforcing, mounting details and insulation if required and typical elevations.

b. Indicate flows, pressure drops (including interconnecting piping for radiant panels), heat outputs and mean temperatures.

c. Indicate mechanical and electrical service locations and requirements.

D. Manufacturer's Instructions: Indicate installation instructions and recommendations.

E. Project specific installation instructions and details.

F. Project Record Documents: Record actual locations of components and locations of access doors in radiation cabinets and ceiling panels required for access or valving.

G. Operation and Maintenance Data: Include manufacturer's descriptive literature, operating instructions, installation instructions, maintenance and repair data and parts listings.

H. Warranty: Submit manufacturer's warranty and ensure forms have been completed in Owner's name and registered with manufacturer.

1.7 QUALITY ASSURANCE

A. Manufacturer Qualifications: Company specializing in manufacturing the Products specified in this section with minimum ten (10) years of documented experience.

B. Products Requiring Electrical Connection: Listed and classified by Underwriter's Laboratories Inc. testing firm acceptable to the authority having jurisdiction and suitable for the purpose specified and indicated.

1.8 PRODUCT, STORAGE AND HANDLING

A. Delivery of materials shall be made to the project by the materials supplier in accordance with the instructions to the Contractor.

B. The Contractor shall provide adequate locked storage space with shelving for the materials, shall be responsible for all items of materials after receipt from the supplier, and shall replace all materials lost or damaged after delivery and receipt.

C. The Contractor shall furnish the materials supplier with receipts for all materials and accessory items received and shall send copies of these receipts to the Architect.

1.9 WARRANTY

A. See General Conditions for additional warranty requirements.

PART 2 - PRODUCTS

2.1 UNIT HEATERS

A. General

1. All type heaters, as applicable, shall be hung with vibration spring isolators as hereinbefore specified.

2. The Contractor shall provide control valves and unit or remote mounted thermostats and wire to fan, to cycle fan “on/off.”

3. The Contractor shall make provisions to "open/close" the steam or water control valves when heaters are "on/off", as indicated hereinafter.

4. Unit manufacturer shall provide starters and disconnect switches.

5. Thermostats used with all type heaters shall be coordinated with the unit manufacturer for compatibility with equipment.

6. Heater colors, where applicable, shall be as provided as standard by the unit manufacturer.

7. Heater finish color shall be as determined by the Architect during shop drawings from the colors provided as standard by the unit manufacturer.

8. Temperature Control

   a. Thermostat control shall be provided on floor and wall mounted units, consisting of factory built-in thermostat or wall-mounted thermostat of fully enclosed and snap acting to prevent radio or TV interference. The thermostat shall have a temperature adjustment range between 45°F and 95°F. Integral thermostats shall have tamperproof adjustment through the discharge grille by means of a hex wrench. Ceiling and inverted mounted units shall be provided with wall mounted MHT 4015E-1007 thermostat.

   b. If not indicated on the plans the unit shall have a unit mounted return airside thermostat.

   c. Thermostat shall operate the single-phase holding coil circuit of the integrally mounted power control relay(s). This single-phase relay holding coil circuit shall either be powered from the cabinet unit heater main power supply or from a separate 120V or 24V single-phase circuit.

   d. An integral fan delay switch shall be provided to prevent discharge of cold air, by delaying start-up of the fan motor until heating elements have warmed up. This same fan delay switch shall maintain motor operation after heating elements have been de-energized to dissipate any residual heat.

   e. Floor, wall and inverted mounted units shall be equipped as standard with a 2-speed/2-heat selector switch which will permit simultaneous tamperproof "high/low" adjustment of fan speed and heat output by means

of a hex wrench through the discharge grille. Ceiling mounted units shall be wired for medium speed.

B. Hot water or steam propeller type unit heaters

1. Provide unit heaters of arrangement (floor or ceiling mounted, exposed or recessed) as indicated on the drawings.

2. Acceptable manufacturers subject to compliance with the specifications shall be as follows.

   a. Sterling
   b. Trane
   c. Modine
   d. Vulcan
   e. Airtherm
   f. Sigma

3. Casing shall be 2-piece with "picture frame" front formed into wrap-around sides, top and bottom with horizontal louvers and louver keepers. Back panel shall be 18 gauge with deep draw fan orifice for extreme rigidity. Heaters shall have cast brass coil supply and return pipe tap connectors bolted to back corners and casings phosphatized to prevent corrosion.

4. Fans shall have aluminum blades and shall be factory balanced for standard application.

5. Coils shall be one-row deep in the direction of flow, headerless, single tube, single serpentine type. Fins shall be aluminum Sigma-Flo, mechanically bonded to seamless copper tubing. Coils shall be one-row deep in airflow direction and shall be tested at 300-psig air, under water.

6. Motors shall be totally enclosed, insulated, shaded pole. Motors shall have built-in overload protection and shall be permanently lubricated.

7. Provide four (4) direction control louvers with lateral diffusion and clips suitable for support off louvers.

C. Electric propeller type unit heaters shall be as follows:

1. Provide electric unit heaters of the type, size, capacity and voltage as specified on the drawings.

2. Acceptable manufacturers subject to compliance with the specifications shall be as follows:

   a. Trane
   b. Chromalox
   c. Markel

3. Enclosures shall be fabricated from heavy gauge zinc coated steel, finished in high gloss beige enamel. Enclosures shall contain heating elements, contactors and control transformers where required. Air shall be drawn in the back of the heater and discharged through independently adjustable horizontal louvers on the front. In the low portion of the front, a large hinged access door extending the width of the heater shall be provided for easy wiring and inspection of controls. Heater and supply wiring diagram shall be attached permanently to the inside of this door. Motor shall be mounted on a heavy gauge formed wire protective guard. A castle nut with cotter key shall be supplied on the top of the unit at center of gravity to allow easy support and adjustment.

4. Elements shall consist of helically coiled nickel chromium alloy resistance wire embedded and completely surrounded in magnesium oxide, enclosed and swaged into corrosion resistant sheaths to which are permanently attached corrosion resistant steel fins. Element assemblies shall be circular in shape and enclosed in a closely fitting cylinder creating a pressure chamber to assure uniform airflow.

5. Motors shall be totally enclosed industrial rated single-phase, permanently lubricated and equipped with thermal overload protection with automatic reset. Units rated 20 KW and less shall have shaded pole motors. Those over 20 KW shall have permanent split capacitor motors.

6. Fan blade shall be of the axial flow type designed for high efficiency and quiet operation. Fan speed shall not exceed 1700 rpm.

7. All heaters shall be equipped with a manual reset thermal cutout which disconnects elements and motors in the event normal operating temperatures are exceeded.

8. Heaters shall be designed for a single supply circuit, with elements, motor and control circuits subdivided and fused to conform to the National Electric Code, Occupational Safety and Health Act (OSHA) and Underwriters' Laboratories, Inc., Standard 573-1968. All 3-phase heaters shall have balanced phases.

9. Contactors and control circuit transformers, where required, shall be factory assembled and wired with only direct line supply and thermostat connections required in the field.

10. Heaters are to be listed under the Re-Examination Service of Underwriters' Laboratories, Inc. Heaters shall be guaranteed to be free from defective material and workmanship for a period of one (1) year, with the exception of the heating elements which shall be guaranteed for five (5) years.

2.2 CABINET UNIT HEATERS SHALL BE AS FOLLOWS

A. Steam or Hot water

1. Acceptable manufacturers subject to compliance with the specifications shall be as follows.

a. Sterling
b. Trane
c. Modine
d. Vulcan
e. Airtherm
f. Sigma

2. Units shall include chassis with galvanized steel wrap-around structural frame with all edges flanged. Insulation shall be faced, heavy density glass fiber. Where applicable, cabinet unit heaters shall be suitable to be installed in a manner to receive ductwork (supply and/or return).

3. Cabinets shall have a minimum 16 gauge steel front panels, 18 gauge steel end and top panels and channel formed edges around entire panel perimeters. Front panel shall be insulated over the entire coil section. Integral stamped outlet grilles shall be with 15-degree deflection from vertical. Provide stamped lattice discharge grilles, access door on coil connection side of unit filter and front panel removable without tools.

4. Cabinet finish shall be cleaned, bonderized, phosphatized and flow coated with baked-on primer and final paint finish as directed by the Architect in the field.

5. Coils shall have 5/8 inch O.D. seamless copper tubes bonded to configured aluminum fins with continuous fin collars and sleeved coil and supports. Maximum working pressure shall be 300 psig, factory burst test, 450 psig (air) and leak test 300 psig (air under water).

6. Fan wheels shall be centrifugal, forward curved, double width of non-corrosive, molded, fiberglass reinforced thermoplastic material. Fan housings shall be of formed sheet metal.

7. All motors shall have integral thermal overload protection and start at 78% of rated voltage. Motors shall operate satisfactorily at 90% of rated voltage on all speed settings and at 10% overvoltage without undue magnetic noise.

2.3 FINNED TUBE RADIATION

A. General

1. Provide finned tube radiation of size, capacity, location and enclosure style as shown and scheduled on the drawings and as hereinafter specified.

2. Acceptable manufacturers subject to compliance with the specifications shall be as follows:

a. Vulcan
b. Sterling
c. Sigma

3. Radiation shall have net I=B=R approved ratings in accordance with the Hydronics Institute "Testing and Rating Standard for Finned Tube Radiation".

B. Heating Elements (Typical All Radiation Types)

1. Heating elements shall be steel or copper/aluminum supported at 4'-0" intervals with a wall mounted slide-cradle type hanger. Provide additional horizontal pipe hangers as required.

2. All hangers for heating elements shall be of the ball bearing or nylon coated slide-cradle type, galvanized die formed. Hanger shall provide for lengthwise movement of element during expansion and contraction, as well as alignment of element to prevent contact with bracket, wall or enclosure. Hangers shall allow a minimum of 1 1/2" of vertical adjustment.

3. Steel heating elements shall have steel fins permanently bonded to steel tube and guaranteed for working pressures up to 125 psi at 330°F. The bond of fin to tube shall be guaranteed under normal operating conditions for the life of the installation. Minimum tube wall thickness shall be 0.125". Minimum fin thickness shall be 0.032". Tube size, fin size and fin spacing shall be as indicated on the drawings. Elements shall be painted black with NPT threaded ends.

4. Copper/aluminum heating elements shall have aluminum fins collared and mechanically bonded to copper tubes and guaranteed for working pressures up to 100 psi at 330°F. The bond of fin to tube shall be guaranteed under normal operating conditions for the life of the installation. Minimum tube wall thickness shall be 0.025". Tube size, fin size and fin spacing shall be as indicated on the drawings.

C. Enclosures

1. General

a. Enclosures shall be of the types shown on the drawings, manufactured of 16-gauge steel. Joining of enclosures shall be accomplished with interlocking slip joints to provide rigidity. All enclosures shall be chemically phosphatized before priming with baked primer. Finish painting shall be manufacturer standard color as selected by the Architect. Accessories shall be die-formed with beaded or flanged edges. Access doors shall be provided where shown on the drawings and where required for access to valves, vents, etc. Access doors shall be hinged with tamperproof latch. No sheet metal screws or other fastening or joining device shall be visible when enclosure is installed below eye level.

b. Provide all end caps, corner pieces, seams and accessories as required for a complete radiation installation. Enclosures shall be wall-to-wall, except where otherwise specifically noted on the drawings. Where not wall-to-wall, provide minimum of 12" cover each side of fin tube to allow for installation of valves and other accessories. Ordering and installation of

all radiation related accessories and exact lengths of radiation covers shall be based on the actual job conditions.

c. Provide partial backplate die formed for rigidity. Plate shall be off-the-wall allowing for removal of enclosure without wall scratching. Provide rubber gasket at wall for complete air seal.

d. Brackets shall be die formed for rigidity and must be designed to support the partial backplate at the top, as well as the front skirt of the enclosure. Brackets shall incorporate a tamperproof system for fastening the enclosure, eliminating removal of enclosure without the use of tools.

e. Radiation enclosure shall be suitable for installing return pipe main under fin tube or double finned elements, where applicable and shown on the drawings.

2. Radiation Enclosure Types

a. Type "A" radiation type shall have slope top style enclosure, manufactured of 16-gauge steel with stamped, pencilproof outlet grille.

b. Type "B" radiation shall have extruded aluminum top outlet grille and 16 gauge steel front plate.

1) Aluminum grille shall be of pencilproof design, formed from a continuous extrusion with vanes directed toward room. Grille shall have hard coat with clear anodized finish.

2) Steel front plate shall have baked primer and finish painting with manufacturer’s standard color as selected by the Architect.

c. Type "C" radiation shall have floor mounted pedestal type enclosure with extruded aluminum top outlet grille and 16 gauge steel side plates.

1) Aluminum grille shall be of pencilproof design, formed from a continuous extrusion with vanes directed toward room. Grille shall have hard coat with clear anodized finish.

2) Steel side plate shall have baked primer and finish painting with manufacturer’s standard color as selected by the Architect.

3) Floor mounted pedestal bracket shall provide rigid support for heating element and enclosure.

d. Type "D" radiation shall be bare element finned tube with custom enclosure provided by others. Provide slide-cradle type heating element hanger as herein specified.

e. Type "E" radiation shall be bare element finned tube with no enclosure, for installation in concealed ceiling or soffit space as shown on the drawings. HVAC Contractor shall provide all pipe hangers and supports.

2.4 DOOR HEATERS

A. General

1. Provide door heaters of capacity, quantity and characteristics, as shown and scheduled on the drawings.

2. Acceptable manufacturers subject to compliance with the specifications shall be as follows:

   a. Dynaforce Corp.
   b. Air King
   c. Wing
   d. Mars

3. Air curtains shall be performance rated in accordance with test methods defined in AMCA Standard 220.

4. Air curtain ratings shall be certified by AMCA. Air curtains shall bear the AMCA seal.

5. Where indicated on the contract drawings provide air curtains with heating coils having capacity scheduled.

6. Air curtains shall be factory assembled and functionally tested prior to shipment to job site.

7. IR curtains shall be complete with all parts, components and accessories UL listed for application and installation as shown.

8. Air curtains shall provide a single point power connection. Power source shall be 208 volt, 3 phase, 60 hertz.

9. The maximum noise level measured 10 feet from the air curtain in free field shall not exceed 73 dBA.

10. Air curtain shall be provided with internal vibration isolation.

11. Motors serving fan(s) shall be TEFC. Refer to Motor Section for additional requirements.

B. Housing

1. Housing panels shall be constructed of not less than 16 gauge ASTM A 653/A653M phosphatized galvanized steel with a minimum G90 finish. Zinc

coating weight of 0.90 ounces per square foot when tested in accordance with ASTM A 90.

2. Housing shall be provided with a structural frame and reinforced to limit panel deflection to 1/360 of the span. Maximum deflection across the unit length shall not exceed 0.25 inches.

3. Housing shall be designed for field support at ends only. No intermediate field supports will be provided.

4. Housing panels and frame shall be finished with two coats of primer and two coats of enamel. Minimum air-dried film thickness for primer shall be 2 mils per coat. Minimum air-dried film thickness of enamel shall be 5 mils.

5. Housing shall be provided with access doors or removable panels for access to fans, bearings, motor and all other internally mounted and serviceable components. Size of access shall allow for repair or replacement of internally mounted components.

6. Air curtains without heating coils shall be provided with a removable heavy gauge expanded metal inlet grille painted to match the housing panels.

C. Discharge Nozzle

1. Discharge nozzle shall be provided with adjustable louvers.

2. Discharge nozzle shall provide adjustable directional air pattern control of minimum plus or minus 15 degrees.

3. The discharge nozzle shall be provided with an adjustable damper to modulate airflow from scheduled flow to at least 50 percent of scheduled airflow.

D. Electrical

1. Electrical work shall be in accordance with the National Electrical Code, NFPA 70.

2. Wiring shall be 600 volt rated type THWN stranded copper. Minimum wire size shall be 14 AWG for control and 12 AWG for power.

3. Provide a unit mounted control panel to house all electrical components and control circuitry. The enclosure shall conform to NEMA Standard Type 12 (industrial use) and J.I.C. standard E.G.P.-1-1967.

4. The control panel shall include:

   a. Starter.
   b. One overload block for each motor.

c. A transformer with fused primary and secondary providing 120 volts for the control circuitry.
d. Provide a ground wire for each circuit.
e. All components shall be factory wired to a terminal strip for field connection.
f. All components including control panel shall be UL listed.

E. Control

1. Provide air curtain complete with Hand-Off-Auto switch. With the switch in the auto position the air curtain shall energize and de-energize based on the door operation switch. When the door open switch is depressed the fan is energized first and then the door is energized to open. When the door close switch is depressed the door shall close fully then the fan shall be de-energized. Coordinate with door supplier.

F. Hot Water Door Heaters.

1. The heating element shall consist of fin and tube extended surface with aluminum fins mechanically bonded to 5/8" seamless copper tubing, same end connections. The heating element shall be brazed tube construction. Each unit shall be factory tested at 400-psig hydrostatic pressure prior to shipment.

2.5 FAN COIL UNITS

A. General

1. Provide horizontal or vertical fan coil units where shown and indicated on the drawings. Unit capacities shall be certified in compliance with Air Conditioning and Refrigeration Institute Standard 440-81. Units shall be UL listed under the Re-Examination Service.

2. Acceptable manufacturers subject to compliance with the specifications shall be as follows:

a. Airtherm
b. Trane
c. McQuay
d. Carrier
e. York
f. International Fan Coil
g. Williams

3. The basic unit shall be fabricated of 18 gauge galvanized steel. Provision for hanging the unit shall be provided by slots in the top wrap of the basic housing. The standard arrangement shall be furnished with a 1 inch discharge duct collar with extended collars furnished where shown with ductwork.

4. The condensate drain pan shall be fabricated of 18 gauge galvanized steel with closed cell, fire retardant, foam insulation coating. Removable pan extension shall be available at the coil header end of the unit to provide positive control of condensate from valves and controls. This extension, being easily removable, shall provide ready access to valves and piping after unit installation.

5. The motor blower assembly shall be designed for easy removal from the basic unit to provide for ease of servicing these components. Removal of this assembly shall also provide access to the entering air face of the coil, which is the face that will accumulate any dirt passing through the filter.

B. Cabinet

1. The cabinet and the finished access panel shall be 18 gauge steel, bonderized, and finished with a parchment baked primer paint. Baked enamel finishes in several color selections shall be available.

2. All cabinet panels shall be lined with 1/2 inch glass fiber acoustic and thermal insulation. The bottom panel of the unit shall be removable and provide complete access to the basic unit. The bottom access panel shall be complete with stamped grilles and filter rack. Stamped discharge grilles shall be standard.

C. Coils

1. All chilled water coil ratings shall be ARI certified. Coils shall have 1/2 inch O.D. copper tubes with aluminum fins mechanically bonded to the tubes. All coils shall be leak tested at 350 psig minimum air pressure and shall be suitable for working pressures up to 250 psig. Manual air vents shall be furnished as standard on all coils. Coil connections shall be 5/8 inch O.D. male sweat.

D. Filters

1. All units shall be provided with 1 inch throwaway woven glass fiber filters as standard as well as a permanent washable filter for each unit.

E. Fans

1. The fans shall be centrifugal, forward curved, double width wheels. Blower housing shall be rugged galvanized steel with special rolled perimeter seams to provide added rigidity and assure smooth, quiet operation.

F. Motors

1. All motors shall be resilient mounted, three-speed, tap wound, with UL listed thermal overload protection. Motor bearings shall be of the sleeve type with oil tubes and oversized oil reservoirs provided to assure positive lubrication with minimum servicing required. Positive speed reduction shall be assured through careful matching of motor torque to blower loading with low speed

approximately 1/2 of high speed. Standard motors shall be of the shaded pole type.

2.6 RADIANT HEATING PANELS

A. General

1. Provide a radiant heating panel system as indicated on the drawings and connect to hot water piping.

2. Acceptable manufacturers subject to compliance with the specifications shall be as follows:
   a. Sun-El
   b. Sterling
   c. Airtex
   d. Airtite

3. Performance data and dimensional specifications shall be available from the manufacturer for all products. Performance and capacity data shall be based on testing performed by the manufacturer or confirmed by a testing laboratory recognized in the Industry.

4. The manufacturer shall demonstrate his capability in engineering, manufacturing and financial resources to the satisfaction of the Architect and Engineer.

5. The panel manufacturer shall furnish and install the panels; hot water supply and return piping to the panel system shall be provided by the HVAC Contractor. The "Radiant Panel Contractor" shall refer to the radiant panel manufacturer.

B. Radiant Panel Performance Requirement

1. Panel thermal performance shall be as specified herein and on the mechanical drawings.

   a. The radiant panels will have a minimum heating output as scheduled on the drawings

2. Panel widths shall be as indicated or scheduled on the drawings.

C. Radiant Panels/Extrusions

1. Radiant panel shall be manufactured utilizing extruded aluminum strips of approximately 0.115 overall thickness. The strips shall have a minimum 0.495 I.D. copper tube firmly attached to aluminum extrusion under all operating temperature conditions. Ends of tubes shall be swaged to 0.569 I.D. for proper soldering fit of ½ inch Type "L" soft copper tubing.

2. Panel sizes shall fit into a ceiling inverted T-bar linear system and as called for in the drawings and specifications. Lengths shall be as shown on the drawings.

Finish on the face of the panel shall be of a color selected by the Architect. Finish shall be powder coated and suitable for temperatures up to 350°F.

3. Face configuration shall be fluted, with recessed 1/8 inch linear flutes on 1/2 inch centers.

4. Circuiting of the tubes on the back of the panel shall be straight tubes with ends slightly pulled up for ease of soldering.

5. The panel manufacturer shall provide a 2 inch thick glass fiber pad insulation on the upper side of the radiant panels to minimize heat loss to the ceiling plenum.

6. Insulation shall be attached to the panel.

2.7 PANEL RADIATOR

A. General

1. Manufacturer

a. Acceptable manufacturers subject to compliance with the specifications shall be as follows:

1) Runtal North America, Inc.
2) Embassy Industries, Inc.
3) Buderus Hydronic Systems, Inc.

b. The manufacturer shall have a minimum of ten year's experience in building panel radiators, and shall be able to provide a list of ten successful projects that have been installed for at least five years.

c. The radiator manufacturer shall provide a sample of the radiator with grille for evaluation, by a date no later than two weeks prior to the bid date.

2. The wall hung heating panel radiation shall be of one-piece all-welded steel construction, consisting of flattened water tubes welded to headers at each end.

3. The radiator shall include an integral heavy gauge (0.09" minimum) all-welded perforated top grille except:

a. On curved radiators the grille is omitted.

4. The headers shall include all necessary inlet, outlet and vent connections as required. Standard connection sizes are ½" NPT tapered thread for supply and return piping, and 1/8" for the vent connection.

a. Internal baffling shall be provided where required for proper water flow.

5. The radiant heating panels shall be available in lengths from 2’-0” to 29’-6” in two inch even increments without the need for splicing.

6. Pressure ratings for the radiation shall be a minimum working pressure of 125 PSIG.

7. Panel radiation expansion shall not exceed 1/64” per foot of radiation at 215ºF. The installer shall provide adequate expansion compensation for each radiator.

    a. The panel radiation shall be cleaned and phosphatized.

    b. The radiation is then finish painted with a gloss powder coat finish, for a total paint thickness of 2-3 mils (0.002” - 0.003”).

    c. The finishing color shall be with manufacturer’s standard color as selected by the Architect.

8. The panel radiation shall be capable of being mounted to typical stud wall construction without additional blocking or strapping.

    a. Mounting brackets shall be provided with the radiation.

    b. Pedestals shall be provided with floor mounted radiation

B. Standard Output Panel Radiator

1. Provide steel panel radiator elements of lengths and in locations as indicated, and of capacities, style and having accessories as scheduled and or specified.

2. Performance data and dimensional specifications shall be available from the manufacturer for all products.

    a. Performance and capacity data shall be based on testing performed by the manufacturer or confirmed by a testing laboratory recognized in the Industry.

C. High Output Panel Radiator

1. Provide steel panel radiator elements of lengths and in locations as indicated, and of capacities, style and having accessories as scheduled.

2.8 ACTIVE CHILLED BEAMS

A. Approved Manufacturers:

1. Price

2. NuClimate

3. Dadanco

B. Active beam shall utilize induction of room air across a water coil mounted within the unit to provide sensible cooling or heating when required. The induced air shall mix with primary air and discharge evenly into the room via lateral discharge slots.

C. Configuration: Active beams shall consist of an air inlet, pressurization cavity, induction nozzles, enclosed water coil(s), 2-pipe or 4-pipe water connections as indicated on the drawings, induction face grille or perforated panel, and shall have either a 1-sided or 2-sided discharge as per contract schedule.

D. Active beam capacity shall be tested and certified by manufacturer in accordance with EN Standard 15116 to meet the performance listed on the schedule. Should any performance rating, including supply air volume, chilled water supply temperature, plenum static pressure, etc; deviate from the schedule, Manufacturer shall submit updated capacity, throw and noise data collected as described in Section 2.4 as well as computational fluid dynamic modeling demonstrating that any changes to not impact the air distribution in a room that would cause a detriment to the PMV and ADPI rating from the design conditions. Manufacturer shall have factory testing facility available to perform performance test of units in accordance with said standard, as required. Upon request, up to 1% of units for the project can be tested in accordance with the standard. Request will be made with order and prior to shipment of active beams. Engineer will have the option of witnessing this test.

E. Casing: Air plenum shall be constructed of 24 gauge galvanneal steel, consisting of at least one (1) air inlet. The frame shall be constructed of 0.060” aluminum extrusion.

F. Water Coil: Coil shall consist of copper tubing mechanically expanded into aluminum plate fins. Coils shall be leak tested by manufacture to 450 PSI and have a working pressure of 250 psi and shall be AHRI 410 certified. Water connections shall be one end only. Water connections shall be ½” and be suitable for solder, compression fittings, push on fittings or threaded connection. Fin spacing shall be no greater than 10 fins per inch to prevent dust bridging. The coil shall be removable from the room side without requiring the removal of the beam casing from the ceiling. The coil shall include a vent and drain to facilitate maintenance on the unit. The coil pipes shall be upturned 90 degrees.

G. Fastening: Adjustable mounting brackets shall be factory installed along the length of the air plenum on the unit. Each beam shall be individually supported to the building structure by a minimum of 4 laterally adjustable fixing points, or as recommended by the manufacturer. Installation hardware shall be in accordance with the manufacturer’s recommendations and any local codes that dictate hanging requirements.

H. Nozzles: Nozzles shall be of a fixed size, selected based on cooling and heating requirement. Only formed metal nozzles are acceptable.

I. Face: The coil shall be accessible from the room side for inspection and cleaning without the need for tools through a hinged face supported by the beam casing.

1. Room side accessible controls enclosure shall be furnished where indicated

2. Integrated return section shall be furnished where indicated

J. Paint Finish: Internal casing components and exterior shall be painted black, face and frame elements shall be painted white or other color as chosen by the architect. The paint shall be powder coat polyester with 500 hour salt spray rating and periodic cross hatch and bend adhesion tests.

K. Balancing: Integrated pressure port shall be included with k-factor to read the plenum pressure and corresponding supply air volume.

L. Water and air connections shall be shipped sealed to limit the introduction of dust and dirt during shipping and construction.

M. Accessories:

1. Manufacturer shall supply 12”/18” stainless steel braided hose with isolation ball valves

2. Integral manual inlet balancing damper shall be included with locking handle where indicated on the drawings.

PART 3 - EXECUTION

3.1 INSTALLATION

A. Install in accordance with manufacturer’s instructions.

B. Install equipment exposed to finished area after walls and ceiling are finished and painted. Do not damage equipment or finishes.

C. Protection: Provide finished cabinet units with protective covers during balance of construction.

D. Radiation: Locate on outside walls and run cover continuously wall-to-wall unless otherwise indicated. Center elements under windows. Where multiple windows occur over units, divide element into equal segments centered under each window. Install end caps where units butt against walls or have exposed ends. Align cabinet joints with window mullions. Install wall angles where units butt against walls.

E. Unit Heaters: Hang from building structure and not from piping, with gas pipe hangers anchored. Mounts as high as possible to maintain greatest headroom unless otherwise indicated.

F. Cabinet Unit Heaters: Install as indicated. Coordinate to assure correct recess size for recessed units.

G. Install electric heating equipment including devices furnished by manufacturer but not factory-mounted. Furnish copy of manufacturer's wiring diagram submittal. Install electrical wiring in accordance with manufacturer's submittals and Section 260520.

3.2 FINNED TUBE RADIATION INSTALLATION

A. Finned tube radiation shall be installed in accordance with manufacturer recommendations, Contract Drawings, and reviewed submittals.

B. Pitch heating elements in direction of flow. Provide manual air vent at high point and drain valve at low point.

C. Provide access to all valves, vents, drains, etc., for all radiation types as required. Install control valves in ceilings above radiation where valves do not fit within enclosure or as indicated on the drawings.

D. Height of installed radiation shall be a minimum of 4" above finished floor. Final location shall be determined and approved by the Architect prior to installation.

E. Ordering and installation of all radiation related accessories and lengths of radiation enclosures shall be based upon actual job conditions.

3.3 DOOR HEATERS INSTALLATION

A. Door heaters shall be installed in accordance with manufacturer recommendations, Contract Drawings, and reviewed submittals.

B. Door heaters shall be installed so as to ensure easy accessibility for service.

C. Door heaters with water coils shall be installed such that coils can be completely drained and shall have a vent at coil high point.

3.4 RADIANT CEILING PANEL INSTALLATION

A. Radiant Ceiling Contractor Qualifications

1. Installation of the radiant panel system shall be performed by a qualified Contractor appointed by the manufacturer, and installed as recommended and directed by the radiant panel manufacturer. Contractor shall demonstrate his competence in ceiling installation before his appointment by the manufacturer. The Contractor shall be experienced in the installation of radiant ceilings and shall provide all labor, materials, tools, service and supervision for a complete, functional system as shown on the mechanical and Architectural plans. The Radiant Ceiling Contractor shall coordinate his work with the Acoustical Ceiling Contractor and Construction Manager.

2. Contractor Responsibilities

a. Install the extruded radiant ceilings complete in accordance with the manufacturer's recommendations and to the satisfaction of the Architect.

b. The Contractor shall abide by the Architectural and mechanical drawings, room finish schedule and Architectural details for correct size and placement of all panels.

c. The extruded radiant ceiling shall be a completely pre-engineered, designed and tested system installed in an exposed inverted "T" suspension system, and shall be complete with interconnecting piping and required trim.

1) The suspension system may consist of main inverted "T's" of 0.030 inch minim steel thickness accurately leveled and installed per drawings. Cross-tees shall be 0.021 inch minimum steel thickness installed per drawings, and cut with proper tools to produce clean edges. Hangers shall be installed at not over 3'-0" on centers.

2) Insulation on top of the panel shall be 2 inches thick, 0.75 lb./sq.ft. glass fiber pads.

d. Panel Installation

1) Interference between the radiant panel ceilings and any other item shall be resolved by the Radiant Ceiling Contractor and the Trade in question.

2) All metal moldings and exposed surfaces visible in the room shall have a two-coat baked enamel finish as on the radiant ceiling panels.

3) Shop drawings to ¼ inch scale shall be submitted by the Contractor, showing layouts and details of all areas where radiant ceilings are indicated, and any interferences with other Trades resolved.

4) All interconnection of radiant panels shall be made with ½ inch Type "L" soft copper tubing.

5) Radiant Ceiling Contractor's responsibility shall terminate at the supply and return point to each room or zone. Interconnecting piping between the supply and return points shall be joined and tested by the Radiant Panel Contractor. Panels shall be leak tested in accordance with piping testing requirements in Part 3 Execution.

6) Runout connections shall end at the supply and return points shown on the drawings with the HVAC Contractor furnishing all supply and return piping, runout valves, air vents and any other heating and zone control items.

7) The HVAC Contractor shall be responsible for thoroughly cleaning out all system piping, flushing, draining and refilling system before radiant panels are connected into the supply and return lines. No radiant panel shall be filled or put into operation without having a representative of the Radiant Ceiling Contractor present.

8) No installation of radiant ceiling panels will commence, without exception, until all glazing has been completed, and exterior openings cleaned in, and all wet work of cementing, plastering or other has been dried out to the satisfaction of the Radiant Ceiling Contractor. Damage to radiant ceiling panels by unauthorized removal of panels, once installed by the Radiant Ceiling Contractor, shall be the responsibility of the Trade causing such damage.

9) The Radiant Ceiling Contractor shall furnish the services of a qualified Engineer to advise the HVAC Contractor in filling, starting, balancing and adjustment procedures of the hydronic heating or cooling system.

3.5 ACTIVE CHILLED BEAM

A. All active chilled beam units shall be installed in accordance with the latest industry standards, per the manufacturer's recommendations and as indicated on the Drawings.

B. Active chilled beams shall be independently suspended from the structure at four points for units up to and including six feet in length. Units longer than six feet in length shall be suspended from the structure with six support points. Units shall be suspended with either ⅜" diameter suspended rods or code approved suspension wire.

C. Air connections to the main primary air duct shall be made with flexible duct with all joints sealed and made airtight.

D. The piping system shall be flushed to remove all debris before connecting to the active chilled beams. Water connections shall be flexible hoses or hard connection using sweated fittings.

E. Flexible hoses shall comprise a PTFE lined hose with stainless steel wire braided jacket rated for a maximum operating pressure of not less than 500 PSI at 200°F.

F. MOCK-UP INSTALLATION

1. Prior to installation of multiple active chilled beam units, the Contractor shall install a sample unit as a mock-up generally representative of a typical active chilled beam and ceiling installation. The mock-up installation shall be complete with piping, ductwork and water valves. The mock-up installation shall be located in one of the typical areas of the project. The Contractor shall advise the Engineer and Owners representative after the mock-up is complete and arrange a suitable time for inspection and review to determine any changes and

modifications that need to be made for the installation to be acceptable to the Engineer and Owner. The Contractor shall provide the required modifications and additional follow-up field inspections as required without additional cost to the Owner.

3.6 CLEANING

A. After construction is completed, including painting, clean exposed surfaces of units. Vacuum clean coils and inside of cabinets.

B. Touch-up marred or scratched surfaces of factory-finished cabinets, using finish materials furnished by manufacturer.

C. Install new filters at all cabinet unit heaters prior to completion of the project.

END OF SECTION

SECTION 23 8900 – STEAM HUMIDIFIERS

PART 1 - GENERAL

1.1 RELATED DOCUMENTS

A. Drawings and general provisions of the Contract, including General and Supplementary Conditions, Section 230500 and other Division 1 Specification Sections, apply to this Section.

B. LEED Building General Requirements: The Owner requires the Contractor to implement practices and procedures to meet the project's environmental performance goals, which include achieving LEED Certification. Specific project goals that may impact this area of work include: Use of recycled-content materials; use of locally-manufactured materials; use of low-emitting materials; construction waste recycling; and the implementation of a construction indoor air quality management plan. The Contractor shall ensure that the requirements related to these goals, as defined in the sections below, are implemented to the fullest extent. Substitutions, or other changes to the work proposed by the Contractor or their Subcontractors, shall not be allowed if such changes compromise the stated LEED Building Performance Criteria.

1. Comply with LEED (Leadership in Energy and Environmental Design) Green Building Rating System BD+C, Version 3.

1.2 WORK INCLUDED

A. Steam Humidifiers

1. Furnish and install all steam humidifiers in-duct or in unit, controls, piping, wiring, enclosures, access doors, etc. to make a complete and operational system.

2. All equipment shall be new and shall be of the type, style, size and capacities as scheduled.

3. Refer to drawing schedules and details for humidifier capacities and the minimum number of manifolds.

4. All piping and pneumatic tubing connections, as well as all interlocking, shall be provided under this Contract.

1.3 RELATED SECTIONS

A. Examine all drawings and criteria sheets and all other Sections of the Specifications for requirements which affect work under this Section whether or not such work is specifically mentioned in this Section.

B. Section 017419 "Construction Waste Management and Disposal" for requirements related to construction waste management and disposal at the project site.

C. Section 018113 “VOC Limits for Adhesives, Sealants, Paints and Coatings” for restrictions of VOC in adhesives, sealants, paints and coatings.

D. Section 018119 “Construction Indoor Air Quality (IAQ) Management” for requirements during construction for indoor-air-quality management.

1.4 REFERENCES

A. Applicable provisions of the following Codes and Trade Standard Publications shall apply to the work of this Section, and are hereby incorporated into, and made a part of the Contract Documents.

B. Material standards shall be as specified or detailed hereinafter and as following:

1. ARI 410 – Forced-Circulation Air-Cooling and Air-Heating Coils.
2. SMACNA – HVAC Duct Construction Standards, Metal and Flexible.
3. NFPA 70 – National Electrical code.

1.5 SUBMITTALS

A. See Section 230500 and General Conditions for additional requirements.

B. Product Data: Provide typical catalog of information including arrangements.

C. Shop Drawings:

1. Submit schedules of equipment and enclosures typically indicating length and number of pieces of element, access doors and output provided.
2. Indicate mechanical and electrical service locations and requirements.

D. Manufacturer’s Instructions: Indicate installation instructions and recommendations.

E. Project Record Documents: Record actual locations of components and locations of access doors and access required for access or valving.

F. Submit all calculations including steam pressure and absorption distance. Include calculations for economizer cycle as well as most severe temperature conditions.

G. Operation and Maintenance Data: Include manufacturer’s descriptive literature, operating instructions, installation instructions, maintenance and repair data and parts listings.

H. Warranty: Submit manufacturer’s warranty and ensure forms have been completed in Owner’s name and registered with manufacturer.

1.6 QUALITY ASSURANCE

A. Manufacturer Qualifications: Company specializing in manufacturing the Products specified in this section with minimum five (5) years of documented experience.

B. Products Requiring Electrical Connection: Listed and classified by Underwriter's Laboratories Inc. testing firm acceptable to the authority having jurisdiction and suitable for the purpose specified and indicated.

1.7 PRODUCT, STORAGE AND HANDLING

A. Delivery of materials shall be made to the project by the materials supplier in accordance with the instructions to the Contractor.

B. The Contractor shall provide adequate locked storage space with shelving for the materials, shall be responsible for all items of materials after receipt from the supplier, and shall replace all materials lost or damaged after delivery and receipt.

C. The Contractor shall furnish the materials supplier with receipts for all materials and accessory items received and shall send copies of these receipts to the Architect.

PART 2 - PRODUCTS

2.1 STEAM HUMIDIFIERS

A. Acceptable manufacturers subject to compliance with the specifications shall be as follows:

1. Armstrong
2. Dri-Steem
3. Pure Humidifier

B. Provide steam humidifiers for pneumatic modulating control, of the steam separator type, providing full separation ahead of an integral steam jacketed control valve which discharges through an internal steam jacketed drying chamber, a silencing chamber, and a multiple steam jacketed distribution manifold. Humidifiers shall be single or multiple tube(s) as scheduled. Tube length shall match width of ductwork.

C. Humidifiers shall receive steam at supply pressure (low pressure) and discharge at atmospheric pressure. Humidifiers shall be provided with inlet strainer and external inverted bucket steam traps. Humidifiers shall be constructed as follows:

1. Separating chamber shall be designed to remove all water droplets and all particulate matter larger than (3) microns when humidifier is operating at maximum capacity without objectionable noise.

2. Chamber shall be cast iron or stainless steel.

3. A stainless steel modulating valve shall be provided. This control valve shall have a minimum turn down ratio:

a. 1/2" – 25:1
b. 3/4" to 2" – 50:1

4. The internal drying chamber shall be jacketed by steam at supply pressure.

5. The silencing chamber shall be steam jacketed and utilize a stainless steel silencing medium.

6. Multiple distribution manifold shall provide uniform distribution over its entire length and be jacketed by steam at supply pressure to ensure that vapor discharged is free of water droplets. A full-length stainless steel internal silencing screen shall be provided. Provide as a minimum of one control for every 5 manifolds. See details for additional information. Provide steam trapping in strict accordance with manufacturer's details and instructions.

D. In addition provide with each humidifier kettle a temperature safety switch, which prevents operation when the condensate temperature returning from the manifold jacket is too low.

E. Provide access doors downstream of humidifiers for visual verification of humidifier operation.

F. Controls In-Duct Booster Type

1. Contractor shall provide airflow switches to provide means of detecting airflow and/or a failure of airflow in the system, which will de-energize a PE switch which will shut off supply control valve to prevent steam from entering the steam humidifier.

a. Acceptable manufacturers of airflow switches subject to compliance with the specification shall be as follows:

1) McDonnell Model AF1
2) Dwyer, Honeywell
3) Johnson Controls.

2. ATC Contractor shall provide a duct mounted high limit humidistat to override the sensor control whenever the high limit is reached as well as maintain the high limit set point until main sensor resumes control. The high limit humidistat shall be mounted into the ductwork at least 8'-0" downstream of the humidifier.

3. Provide a remote wall mounted humidistat to shall modulate and control the humidifier.

G. Controls In-Unit or In-Duct Type

1. Contractor shall provide airflow switches to provide means of detecting airflow and/or a failure of airflow in the system, which will de-energize a PE switch which will shut off supply control valve to prevent steam from entering the steam humidifier.

a. Acceptable manufacturers of airflow switches subject to compliance with the specification shall be as follows:

1) McDonnell Model AF1
2) Dwyer, Honeywell
3) Johnson Controls.

2. ATC Contractor shall provide a duct mounted high limit humidistat to override the sensor control whenever the high limit is reached as well as maintain the high limit set point until main sensor resumes control. The high limit humidistat shall be mounted into the ductwork at least 8'-0" downstream of the humidifier.

3. Provide a remote return air humidistat to modulate and control the humidifier.

PART 3 - EXECUTION

3.1 INSTALLATION

A. Install in accordance with manufacturer's instructions.

B. Install equipment exposed to finished area after walls and ceiling are finished and painted. Do not damage equipment.

3.2 IN-DUCT STEAM HUMIDIFIER INSTALLATION

A. In-duct steam humidifier shall be installed in accordance with manufacturer recommendations, Contract Drawings, and reviewed submittals.

B. Steam humidifier shall be installed so as to ensure easy accessibility for service or removal and replacement of control valves, shut-off valves, strainers, and humidifiers.

C. Install access doors so that visual verification of humidifier operation is easily accomplished.

D. Provide drain from watertight stainless steel (or aluminum) ductwork. Pipe drain to nearest floor drain or slop sink.

3.3 CLEANING

A. After construction is completed, including painting, clean exposed surfaces of units. Vacuum clean coils and inside of duct or plenum.

END OF SECTION

SECTION 23 9000 - HVAC SPECIALTIES

PART 1 – GENERAL

1.1 RELATED DOCUMENTS

A. Drawings and general provisions of the Contract, including General and Supplementary Conditions, Section 230500 and other Division 1 Specification Sections, apply to this Section.

B. LEED Building General Requirements: The Owner requires the Contractor to implement practices and procedures to meet the project's environmental performance goals, which include achieving LEED Certification. Specific project goals that may impact this area of work include: Use of recycled-content materials; use of locally-manufactured materials; use of low-emitting materials; construction waste recycling; and the implementation of a construction indoor air quality management plan. The Contractor shall ensure that the requirements related to these goals, as defined in the sections below, are implemented to the fullest extent. Substitutions, or other changes to the work proposed by the Contractor or their Subcontractors, shall not be allowed if such changes compromise the stated LEED Building Performance Criteria.

1. Comply with LEED (Leadership in Energy and Environmental Design) Green Building Rating System BD+C, Version 3.

1.2 WORK INCLUDED

A. Furnish and install a complete and operable system as specified herein.

1.3 RELATED SECTIONS

A. Examine all drawings and criteria sheets and all other Sections of the Specifications for requirements which affect work under this Section whether or not such work is specifically mentioned in this Section.

B. Section 017419 "Construction Waste Management and Disposal" for requirements related to construction waste management and disposal at the project site.

C. Section 018113 "VOC Limits for Adhesives, Sealants, Paints and Coatings" for restrictions of VOC in adhesives, sealants, paints and coatings.

D. Section 018119 "Construction Indoor Air Quality (IAQ) Management" for requirements during construction for indoor-air-quality management.

1.4 REFERENCES

A. Applicable provisions of the following Codes and Trade Standard Publications shall apply to the work of this Section, and are hereby incorporated into, and made a part of the Contract Documents.

B. Material standards shall be as specified or detailed hereinafter and as follows:

1. NFPA 90A – Installation of Air Conditioning and Ventilating Systems.
2. NFPA 90B – Installation of Warm Air Heating and Air Conditioning Systems.
3. SMACNA (DCS) – HVAC Duct Construction Standards – Metal and Flexible.

1.5 SUBMITTALS

A. See Section 230500 and General Conditions for additional requirements.

B. Product Data: Include equipment fittings and accessories. Provide manufacturers catalogue information.

C. Manufacturer's Installation Instructions: Indicate hanging and support methods, joining procedures.

D. Maintenance Data: Include installation instructions, spare parts lists, exploded assembly views.

1.6 QUALITY ASSURANCE

A. Manufacturer shall have adequate experience of building ductwork of the types required for this project as well as successful experience with projects of similar scope.

PART 2 - PRODUCTS

2.1 GENERAL

A. Acceptable manufactures subject to compliance with the specifications shall be as follows:

1. Space Visual Pressure Indicator

a. Air Flow Direction Inc.

2.2 VISUAL PRESSURE INDICATOR

A. Space visual pressure indicators shall be located for the following rooms:

1. All medication dispensing rooms.
2. All pharmacy rooms.
3. As indicated on the drawings.
4. Negative pressure exam and infusion rooms.

B. Provide visual room pressure indicator model ADI-69-V-N/P manually switchable to positive/negative pressure. Indicator shall be mounted directly above the door(s) to the space. Contractor shall verify with Owner/Architect prior to installation which mode to install the unit, initially.

PART 3 - EXECUTION

3.1 INSTALLATION

A. The drawings shall be followed where they are definite and provided such procedures do not cause objectionable conditions for equipment provided installed under this Contract. The drawings are intended to indicate the sizes of ductwork and if certain sizes are omitted or unclear, obtain additional information before proceeding.

B. The installation shall be done under the direct supervision of the manufacturer.

C. Duct connections to equipment shall be in no case smaller than the equipment openings.

D. Primary Elements shall be installed in strict accordance with the manufacturers published requirements, and with ASME guidelines effecting non-standard approach condition. These elements serve as the primary signals for the airflow systems; therefore, it shall be the responsibility of the contractor to verify and installation, to assure that accurate primary signals are obtained.

E. Install all UL classified devices in accordance with their UL approved installation sheets.

F. An identification label shall be place on each primary flow element showing airflow direction and listing the Model No.; System Served, Size and Identifying Tag No.

G. An identification label shall be placed on each airflow indicating transducer listing the Model No., Flow Elements Served, Full Scale Value, and Identifying Tag No.

END OF SECTION

SECTION 25 0500 – BASIC MATERIALS AND METHODS

PART 1 – GENERAL

1.1 PROVISIONS INCLUDED

A. Include General Conditions, Supplementary General Conditions Division 0 and applicable parts of Division 01 for conditions, Division 50 Commissioning and requirements which may affect the work of this Section.

B. Examine all other Sections of the specifications for requirements which affect work under this Section whether or not such work is specifically mentioned in this Section.

C. Coordinate work with that of all other Trades affecting, or affected by work of this Section. Cooperate with such Trades to ensure the steady progress of all work under the Contract.

D. LEED Building General Requirements: The Owner requires the Contractor to implement practices and procedures to meet the project's environmental performance goals, which include achieving LEED Certification. Specific project goals that may impact this area of work include: Use of recycled-content materials; use of locally-manufactured materials; use of low-emitting materials; construction waste recycling; and the implementation of a construction indoor air quality management plan. The Contractor shall ensure that the requirements related to these goals, as defined in the sections below, are implemented to the fullest extent. Substitutions, or other changes to the work proposed by the Contractor or their Subcontractors, shall not be allowed if such changes compromise the stated LEED Building Performance Criteria.

1. Comply with LEED (Leadership in Energy and Environmental Design) Green Building Rating System BD+C, Version 3.

1.2 DEFINITIONS

A. Words in the singular shall also mean and include the plural, wherever the context so indicates and words in the plural shall mean the singular, wherever the context so indicates.

B. Wherever the terms "shown on drawings" are used in the specifications, they shall mean "noted", "indicated", "scheduled", "detailed", or any other diagrammatic or written reference made on the drawings.

C. Wherever the term "provide" is used in the specifications it will mean "furnish" and "install", "connect", "apply", "erect", "construct", or similar terms, unless otherwise indicated in the specifications.

D. Wherever the term "material" is used in the specifications it will mean any product", "equipment", "device", "assembly", or "item" required under the Contract, as indicated by trade or brand name, manufacturer's name, standard specification reference or other description.

E. The terms "approved", or "approval" shall mean the written approval of the Architect.

F. The term "specification" shall mean all information contained in the bound or unbound volume, including all "Contract Documents" defined therein, except for the drawings.

G. The terms "directed", "required", "permitted", "ordered", "designated", "prescribed" and similar words shall mean the direction, requirement, permission, order, designation or prescription of the Architect. The terms "approved", "acceptable", "satisfactory" and similar words shall mean approved by, acceptable or satisfactory to the Architect. The terms "necessary", "reasonable", "proper", "correct" and similar words shall mean necessary, reasonable, proper or correct in the judgment of the Architect.

H. "Piping" includes in addition to pipe or mains, all fittings, flanges, unions, valves, strainers, drains, hangers and other accessories relative to such piping.

I. Algorithm: A logical procedure for solving a recurrent mathematical problem; A prescribed set of well-defined rules or processes for the solution of a problem in a finite number of steps.

J. Analog: A continuously varying signal value (e.g., temperature, current, velocity etc.

K. BACnet: Building Automation Control Network Protocol, ASHRAE Standard 135.

L. Baud: It is a signal change in a communication link. One signal change can represent one or more bits of information depending on type of transmission scheme. Simple peripheral communication is normally one bit per Baud. (e.g., Baud rate = 78,000 Baud/sec is 78,000 bits/sec, if one signal change = 1 bit).

M. BIBB's: BACnet Interoperability Building Block.

N. Binary: A two-state system where a high signal level represents an "ON" condition and an "OFF" condition is represented by a low signal level.

O. "Concealed" means hidden from sight in chases, furred spaces, shafts, hung ceilings, embedded in construction or in crawl spaces.

P. Deadband: A temperature range over which no heating or cooling is supplied, i.e., 22-25 degrees C (72-78 degrees F), as opposed to a single point change over or overlap).

Q. Diagnostic Program: A software test program, which is used to detect and report system or peripheral malfunctions and failures. Generally, this system is performed at the initial startup of the system.

R. Direct Digital Control (DDC): Microprocessor based control including Analog/Digital conversion and program logic. A control loop or subsystem in which digital and analog information is received and processed by a microprocessor, and digital control signals are generated based on control algorithms and transmitted to field devices in order to achieve a set of predefined conditions.

S. Distributed Control System: A system in which the processing of system data is decentralized and control decisions can and are made at the subsystem level. System operational programs and information are provided to the remote subsystems and status is reported back to the Engineering Control Center. Upon the loss of communication with the Engineering Control center, the subsystems shall be capable of operating in a stand-alone mode using the last best available data.

T. Download: The electronic transfer of programs and data files from a central computer or operation workstation with secondary memory devices to remote computers in a network (distributed) system.

U. Electrical Control: A control circuit that operates on line or low voltage and uses a mechanical means, such as a temperature sensitive bimetal or bellows, to perform control functions, such as actuating a switch or positioning a potentiometer.

V. Electronic Control: A control circuit that operates on low voltage and uses a solid-state components to amplify input signals and perform control functions, such as operating a relay or providing an output signal to position an actuator.

W. Ethernet: A trademark for a system for exchanging messages between computers on a local area network using coaxial, fiber optic, or twisted-pair cables.

X. "Exposed" means not installed underground or "concealed" as defined above.

Y. "Invert Elevation" means the elevation of the inside bottom of the pipe.

Z. "HVAC, Plumbing, and/or Fire Protection Contractor" shall refer to the Contractor or his Subcontractors responsible for furnishing and installation of all work indicated on the HVAC, Plumbing, and/or Fire Protection drawings and specifications, as applicable and or referenced to each Trade in the Architectural and/or Structural documents.

AA. I/O Unit: The section of a digital control system through which information is received and transmitted. I/O refers to analog input (AI, digital input (DI), analog output (AO) and digital output (DO). Analog signals are continuous and represent temperature, pressure, flow rate etc, whereas digital signals convert electronic signals to digital pulses (values), represent motor status, filter status, on-off equipment etc.

BB. I/P: Internet Protocol-global network, connecting workstations and other host computers, servers etc. to share the information.

CC. Local Area Network (LAN): A communication bus that interconnects operator workstation and digital controllers for peer-to-peer communications, sharing resources and exchanging information.

DD. LonMark: An association comprising of suppliers and installers of LonTalk products. The Association provides guidelines for the implementation of the LonTalk protocol to ensure interoperability through Standard implementation.

EE. LonWorks: Network technology developed by the Echelon Corporation.

FF. NAC – Network Application Controller: This controller shall have all the functions of a Network Automation Controller but shall also have direct input/output capabilities for operating large equipment in a stand alone fashion.

GG. NAN – Network Automation Node: A stand-alone, multi-tasking, multi-user, real-time digital processor complete with all hardware, software, and communications interfaces to manage network traffic between Tier 1 and Tier 2 controllers.

HH. Network: A set of computers or other digital devices communicating with each other over a medium such as wire, coax, fiber optics cable etc.

II. "Mechanical Contractor" shall refer to the Fire Protection, Plumbing, HVAC and ATC Contractors, as applicable.

JJ. MS/TP: Master-slave/token-passing.

KK. Operating system (OS): Software, which controls the execution of computer application programs.

LL. Peer-to-Peer: A networking architecture that treats all network stations as equal partners.

MM. PICS: BACnet Protocol Implementation Conformance Statement.

NN. UAC: Unitary Application Controller, digital controller, dedicated to a specific piece of terminal equipment, such as VAV boxes, fan coil units, etc.

OO. "Architect" shall refer to the Architect “Mitchell Giurgola Architects” and/or Engineer "Bard, Rao + Athanas Consulting Engineers, LLC" and/or Owner.

PP. "Owner" shall refer to the designated representatives of the Project Owner.

QQ. "General Contractor" shall refer to the Contractor(s) performing work under other sections of the Contract Specifications.

RR. "Construction Manager" shall refer to the Construction Manager (CM) “Fusco” for this project.

SS. “Commissioning Agent (CA)” shall refer to the party employed by the Owner to witness demonstration or performance for all systems in accordance with the Commissioning plan. Refer to Division 50.

1.3 CODES, STANDARDS AND REFERENCES

A. All materials and workmanship shall comply with all applicable Codes, Specifications, Local and State Ordinances, Industry Standards and Utility Company Regulations, latest editions.

B. In case of difference between Building Codes, State Laws, Local Ordinances, Industry Standards and Utility Company Regulations and the Contract Documents, the

Mechanical Contractor, as applicable, shall promptly notify the Architect in writing of any such difference.

C. In case of conflict between the Contract Documents and the requirements of any Code or Authorities having jurisdiction, the most stringent requirements of the aforementioned shall govern for budgetary purposes. However, no work will proceed until the Architect determines the correct method of installation.

D. Should any Contractor, as applicable, perform any work that does not comply with the requirements of the applicable Building Codes, State Laws, Local Ordinances, Industry Standards and Utility Company Regulations, he shall bear all costs arising in correcting the deficiencies, as approved by the Architect.

E. Applicable Codes and Standards shall include all State Laws, Local Ordinances, Utility Company Regulations and the applicable requirements of the following accepted Codes and Standards, without limiting the number, as follows:

1. National Electrical Code (NEC)

2. Environmental Protection Agency (EPA)

3. Connecticut Environmental Air Quality Protection Agency

4. Connecticut Energy Code

5. Connecticut Building Code including all adopted Supplements

6. Connecticut Fire Prevention Regulations and Elevator Regulations

7. Local Ordinances, Regulations of the Local Building Department and Fire Department

8. Recommendations of the National Fire Protection Association (NFPA), latest applicable edition adopted, in general and in particular:

   a. Life Safety, NFPA 101

   b. HVAC, NFPA 90A, 90B

   c. Removal of Smoke and Grease Laden Vapors from Commercial Cooking Equipment, NFPA 96

9. Recommendations of ASHRAE (American Society of Heating, Refrigeration and Air Conditioning Engineers), including:

   a. ASHRAE 90.1

   b. ANSI/ASHRAE 62-Ventilation for Acceptable Indoor Air Quality

   c. ANSI/ASHRAE 15-Safety Code for Mechanical Refrigeration

d. ANSI/ASHRAE 110-Method of Testing Performance of Laboratory Fume Hoods

e. ANSI/ASHRAE 55-Thermal Environmental Conditions for Human Occupancy

10. In addition to the above Codes and Standards, the research laboratory systems will also be based on the specific requirements and/or recommendations of the following as they relate to laboratory systems:

a. Occupational Safety and Health Administration (OSHA) S29 CFR Part 1910, Health and Safety Standards; Occupational Exposures to Toxic Substances in Laboratories; Proposed Rule. Federal Register July 24, 1986

b. ANSI/AIHA Z9.5 American National Standard for Laboratory Ventilation

c. NFPA 45 - Standard on Fire Protection for Laboratories Using Chemicals, Chapters, 9-2.8, 9-2.9

d. NFPA 56 - Safety Standard for Laboratories in Health-Related Institutions, Chapter 3-3.5

e. Scientific Apparatus Makers Association (SAMA)

f. National Cancer Institute - Safety Standards for Research Involving Chemical Carcinogens

g. National Research Council - Prudent Practices of Handling Hazardous Chemicals in Laboratories

h. National Safety Council - Fundamentals of Industrial Hygiene

i. National Institute of Health

F. In these specifications, references made to the following Industry Standards and Code Bodies are intended to indicate the accepted volume or publication of the Standard. All equipment, materials and details of installation shall comply with the requirements and latest revisions of the following Bodies, as applicable:

1.	AMCA	Air Moving and Conditioning Association
2.	ANSI	American National Standards Institute
3.	ARI	American Refrigeration Institute
4.	ASHRAE	American Society of Heating, Refrigeration and Air Conditioning Engineers
5.	ASME	American Society of Mechanical Engineers
6.	ASTM	American Society of Testing Materials
7.	AWS	American Welding Society
8.	CS	Commercial Standards, U.S. Department of Commerce
9.	FM	Factory Mutual
10.	FS	Federal Specification, U.S. Government

11. MSS Industry — Manufacturers Standardization Society of the Valve and Fittings
12. NEMA — National Electrical Manufacturers Association
13. SMACNA Association — Sheet Metal and Air Conditioning Contractor's National
14. UL — Underwriters' Laboratories, Inc.

G. Each Contractor for the work under his charge, shall give all necessary notices, obtain and pay for all permits, pay all governmental taxes, fees and other costs in connection with his work; file for necessary approvals with the jurisdiction under which the work is to be performed. Each Contractor shall obtain all required Certificates of Inspection for his work and deliver same to the Architect before request for acceptance of his portion of work and before final payment is made.

H. All equipment shall be installed per manufacturer’s recommendations and requirements. The Contractor shall notify the Engineer in writing when they intend to deviate from manufacturer's installation guidelines. The Engineer shall advise if the installation is acceptable prior to installation.

I. Section 017419 “Construction Waste Management and Disposal” for requirements related to construction waste management and disposal at the project site.

J. Section 018113 “VOC Limits for Adhesives, Sealants, Paints and Coatings” for restrictions of VOC in adhesives, sealants, paints and coatings.

K. Section 018119 “Construction Indoor Air Quality (IAQ) Management” for requirements during construction for indoor-air-quality management.

1.4 SUBMITTALS

A. Submit detailed shop drawings or brochures for approval of equipment and material proposed to be used on this project. Furnish the number of copies required by General Conditions.

B. Documents submitted shall show the following:

1. Principal dimensions and details of construction.

2. Operating and maintenance clearances.

3. Weights of principal parts and total weights with information required for the design of supports and foundations.

4. Sizes and location of piping and connections.

5. Performance data, including pump and fan curves; sound data including sound power dB levels in 1/3 octave bands.

6. Data on electric motors, including brake horsepower of driven equipment, nameplate ratings and classes, sound data, starting and running full load currents, required starter size and recommended overload heater ratings.

7. Approval stamp of Underwriters' and other authorities having jurisdiction of Contract Drawings requiring such approval.

8. Certified performance guarantees.

9. Calculations and details for refrigeration for field assembled systems including description of specialties and pressure drops, layout of piping with lengths fittings, and refrigerant specialties, and capacity curves for evaporator and compressor showing balance points.

10. Minimum scale for sheet metal plans and piping plans shall be ¼ inch equal 1 foot.

C. Submit brochures that contain only that information which is relative to the particular equipment or materials to be furnished. Do not submit catalogs that describe several different items other than those items to be used unless irrelevant information is marked out and relevant material is clearly marked.

D. Specifications Compliance Statement

1. The manufacturer shall submit a point by point statement of compliance with the specifications.

2. The statement of compliance shall consist of a list of all paragraphs (line by line).

3. Where the proposed system complies fully, such shall be indicated by placing the word "comply: opposite the paragraph number.

4. Where the proposed system does not comply, or accomplishes the stated function in a manner different from that described, a full description of the deviation shall be provided.

5. Where a full description of a deviation is not provided, it shall be assumed that the proposed system does not comply with the paragraph in question.

6. Submissions which do not include a point by point statement of compliance as specified shall be disqualified.

1.5 GUARANTEE

A. Attention is directed to provisions of the General Conditions and Supplementary General Conditions regarding guarantees and warranties for work under this Contract.

B. Manufacturers shall provide their standard guarantees for work under this Contract, unless specified otherwise. However, such guarantees shall be in addition to and not in lieu of all other liabilities which the manufacturer and CM may have by Law or by

other provisions of the Contract Documents. In any case, such guarantees and warranties shall commence when the Owner accepts the various systems, as applicable and as determined by the Architect. The guarantees and warranties will remain in effect for a minimum period of (1) year thereafter except where longer periods are specifically stated and specified.

C. All materials, items of equipment and workmanship furnished under HVAC, shall carry the warranty against all defects in material and workmanship. Any fault due to defective or improper material, equipment, workmanship or design which may develop shall be made good, forthwith, by and at the expense of the Contractor responsible, including all other damage done to areas, materials and other systems resulting from this failure.

D. Each Contractor shall guarantee that all elements of the systems provided under his Contract, are of sufficient capacity to meet the specified performance requirements as set forth herein or as indicated on the drawings.

E. Upon receipt of notice from the Owner of failure of any part of the systems or equipment during the guarantee period, the affected part or parts shall be replaced by the responsible Contractor.

F. Each Contractor shall furnish, before the final payment is made, a written guarantee covering the above requirements.

1.6 COMMISSIONING

A. The TBA Contractor must also include sufficient man-hours within their bids, for their participation with the Commissioning Team and the rebalancing/readjusting/resetting all device setpoints, as required. For additional work, refer to Division 23 and Division 50.

1.7 THE CONTRACTOR

A. Each Contractor shall base his bid on site examinations performed by him. This requirement is mandatory. Each Contractor shall visit the proposed site where work is scheduled to be performed and ascertain for himself the amount of work required to fulfill the intent of his Contract and the complexity of the installation. Each Contractor shall not hold the Architect, his Consultants, agents or employees responsible for or bound by, any schedule, estimate or for any plan thereof. Each Contractor shall study all Contract Documents (HVAC, Plumbing, Fire Protection, Electrical, Communications, Architectural, Structural), etc., included under each Contract, to determine exactly the extent of work to be provided under each Section, and in installing new equipment and systems and coordinating the work with the other Trades and existing conditions.

B. Each Contractor shall faithfully execute his work according to the terms and conditions of the Contract and specifications and shall take all responsibility for and bear all losses resulting to him in the execution of his work.

C. Each Contractor shall be responsible for the location and performance of work provided under his Contract as indicated on the Contract Documents. All parties employed

directly or indirectly by each Contractor shall perform their work according to all the conditions as set forth in these specifications.

D. Each Contractor shall furnish all materials and perform all work in accordance with the project specifications and any supplementary documents provided by the Architect. The work shall include every item shown on the drawings and/or required by the specifications as interpreted by the Architect. All work and materials furnished and installed shall be new and of the best quality and workmanship. Each Contractor shall cooperate with the Architect so that no error or discrepancy in the Contract Documents shall cause defective materials to be used or poor workmanship to be performed.

1.8 COORDINATION OF WORK

A. Each Contractor shall compare his drawings and specifications with those of other Trades and report any discrepancies between them to the Architect and obtain from the Architect written instructions for changes necessary in the mechanical or electrical work, to ensure that all work is installed in coordination and cooperation with other Trades installing interrelated work. Before installation, each Contractor shall make proper provisions to avoid interferences in a manner approved by the Architect. All changes required in the work of each Contractor caused by his negligence, shall be corrected by him at his own expense, to the Architect's satisfaction.

B. Locations of piping, ductwork, conduits and equipment shall be adjusted to accommodate the new work with interferences anticipated and encountered during installation. Each Contractor shall determine the exact routing and location of his systems prior to fabrication or installation of any system component. Accurate measurements and coordination drawings will have to be completed to verify dimensions and characteristics of the various systems' installations.

C. Lines which pitch shall have the right-of-way over those which do not pitch. For example, waste piping shall normally have the right-of-way. Lines whose elevations cannot be changed shall have the right-of-way over lines whose elevations can be changed.

D. Offsets, transitions and changes of direction in all systems shall be made as required to maintain proper headroom and pitch of sloping lines whether or not indicated on the drawings. Each Contractor shall provide manual air vents and drains as required for his work to affect these offsets, transitions and changes in direction, as applicable.

E. All work shall be installed in a way to permit removal (without damage to other parts) of coils, filters, control appurtenances, fan shafts and wheels, filters, belt guards, sheaves and drives and all other system components provided under this Contract requiring periodic replacement or maintenance. All piping shall be arranged in a manner to clear the openings of swinging overhead access doors, ceiling tiles and cleaning access doors in ductwork.

1. Access to any and all components requiring servicing, adjustment, calibration, maintenance or periodic replacement shall be provided so that the Owner's operations personnel can freely gain access without removal of any materials other than the access panel or ceiling tile. Access shall be understood to mean

free, clear and unobstructed from the floor up to the device and/or component being serviced. Access panels for VAV/CV boxes shall be 24" x 24" minimum.

2. Fire rated access doors with closers shall be provided for all rated assemblies.

F. The Contract Drawings are diagrammatic only intending to show general runs and locations of piping, ductwork, equipment, terminals and specialties and not necessarily showing all required offsets, details and accessories and equipment to be connected. All work shall be accurately laid out with other Trades to avoid conflicts and to obtain a neat and workmanlike installation which will afford maximum accessibility for operation, maintenance and headroom.

G. Where discrepancies in scope of work as to what Trade provides items, such as starters, disconnects, flow switches, electric control components, etc., exist, such conflicts shall be reported to the Architect prior to signing of the Contract. If such action is not taken, each Contractor, as applicable, shall furnish such items as part of his work, for complete and operable systems and equipment, as determined by the Architect.

H. Where drawing details, plans and/or specification requirements are in conflict and where pipe or duct sizes of same pipe or duct run are shown to be different between plans and/or between plans and sections or details, the most stringent requirement will be included in the Contract. HVAC systems and equipment called for in the specification and/or shown on the drawings shall be provided under this Contract as if it were required by both the drawings and specifications. However, prior to ordering or installation of any portion of work which appears to be in conflict, such work shall be brought to Architect's attention for direction as to what is to be provided.

I. Final location of all air distribution devices, thermostats, heaters, control devices, sprinkler heads, etc., shall be coordinated with the Architectural reflected ceiling plans and/or other Architectural details, as applicable. (**Note**: Sprinkler head locations shall provide the specified coverage rating and water flow density, and shall be in accordance with all applicable Codes and in full compliance with the requirements of the Owner's insurance carrier.) Offsets of ductwork, added sheet metal, fittings, elbows, flexible connections, etc., shall be provided as required to comply with the Architectural reflected ceiling plans and/or installation details. Obtain approval of locations of all devices from Architect in the field, prior to installation.

J. Hoods, dishwashers, etc., or other type of equipment shown on the Plumbing, Fire Protection, HVAC and/or Architectural drawings to be provided with services, such as exhaust ductwork, piping, traps, drains, valves, etc., shall be included under this Contract as applicable, including all piping or ductwork connections to systems, to make equipment completely operable. Additional sheet metal, flexible fittings, etc., shall be provided to accomplish the above requirement, as required, all as part of this Contract, at no additional cost to the Owner.

1.9 COORDINATION DRAWINGS

A. Before materials are purchased, fabricated or work is begun, each Contractor shall prepare coordination drawings for all floors/areas, including buried systems/services

(all-Trade-composite at ¼" scale), showing the size and location of his equipment and lines, in the manner described herein under General Requirements.

B. Coordination drawings are for the CM and Architect's use during construction and shall not be construed as shop drawings or as replacing any shop drawings. The coordination drawings, when corrected for actual "as-built" conditions, will be reviewed by the Architect, corrected and become the Record Drawings to be submitted to the Owner for his use.

C. The cost of producing and reproducing the drawings will be included under the Contract of each Trade, including the cost or preparation of the Architectural building outlines. This process may include multiple revisions to these drawings which will be included in the cost. The intent is to provide a fully coordinated set of documents between trades no matter how many times they may have to be redone. The HVAC Contractor shall take the lead to produce the Architectural backgrounds, show all ductwork, piping, etc., and circulate the drawings to any of his Subcontractors and the other Trades (Plumbing, Fire Protection, Electrical), so that they can indicate all their work as directed by the CM and Architect as required, to result in a fully coordinated installation.

D. In addition to the regular coordination drawing review, the mechanical work will also be reviewed by the Architect/Engineer to ensure that the system and equipment arrangements are suitable to provide maintenance access and service as follows:

1. Valves and instrumentation should be grouped where possible and positioned in accessible locations.

2. Valves on pipes of 6" and larger, positioned above 7'-0" in height from the operating level, will be provided with chain operated valve wheels and be located where chains will not interfere with primary access through the mechanical room.

3. Location of control/diagnostic panels shall be shown and identified on the mechanical room coordination drawings.

E. Prepare a complete set of computer based AutoCad (Latest Version) drawings at scale not less than ¼" scale equals 1'-0", showing basic layout for the structure and other information as needed for preparation of Coordination Drawings. The drawings shall indicate the layout of all specialty tradework as indicated herein and shall be designated as Coordination Drawings. The Contractor shall provide a minimum of two (2) weeks notice to the Engineer for preparation of the disk. A signed liability release form will be required from the Contractor prior to the release of the disk from the Engineer.

F. Highlight all smoke and fire rated partitions on the Coordination Drawings for appropriate coordination.

G. The main paths for the installation or removal of equipment from mechanical and electrical rooms shall be clearly indicated on the Coordination Drawings.

H. Each of the specialty trades shall add its work to the base drawings with appropriate elevations and grid dimensions. Specialty trade information shall be required for fan

rooms and mechanical rooms, horizontal exits from duct shafts, crossovers and for spaces it the above ceilings where congestion of work may occur such as corridors and, where required, entire floors. Drawings shall indicate horizontal and vertical dimensions to avoid interference with structural framing, ceilings, partitions and other services. Indicate elevations relative to finish floor for bottom of ductwork and piping and conduit 6" greater in diameter.

1. Specialty Trade shall include:

    a. Plumbing system.
    b. HVAC piping and associated control systems.
    c. Electrical.
    d. Sheet Metal Work.
    e. Fire Protection system.
    f. Automatic Temperature Control
    g. Fire Alarm
    h. Security
    i. Telecommunications
    j. Pneumatic Tube
    k. Commissioning

I. Upon completing their portion of the Coordination Drawings, each specialty trade shall sign, date and return Coordination Drawings to the Contractor.

J. Where conflicts occur with placement of materials of various trades, the General Contractor shall be responsible to coordinate the available space to accommodate all trades. Any resulting adjustments shall be initialed and dated by the affected specialty trade Subcontractor. The General Contractor shall then final date and sign each drawing.

K. Fabrication shall not start until Coordinate Drawings have been distributed to all parties as indicated herein.

L. Format: Coordination Drawings (plans only) shall be done using CAD in AutoCAD (Latest Version), in either IBM or Mac Format. Disks shall be given to the Architect for future transfer to Owner. Coordination Drawings will be used as base for as-built drawings.

M. Distribution of Coordination Drawings:

1. The General Contractor shall provide one print of each Coordination Drawing to:

    a. Each specialty trade Subcontractor.
    b. Owner.
    c. General Contractor.
    d. Architect (for record purposes).

N. After distribution:

1. Resolve all interference's not previously identified.

O. Coordination Drawings include but are not necessarily limited to:

1. Structure.

2. Partition/room layout, including indication of smoke and fire resistance rated partitions.

3. Ceiling layout and heights.

4. Light fixtures.

5. Access panels.

6. Sheet metal, heating coils, heat pumps, grilles, diffusers, etc.

7. All heating piping and valves.

8. Smoke and fire dampers.

9. Soil, waste and vent piping.

10. Major water and gases.

11. Major electrical conduit runs, panelboards, feeder conduit and racks of branch conduit. Motor control centers, starters and disconnects.

12. Sprinkler piping and heads.

13. All equipment, including items in the Contract as well as O.F.C.I. and O.F.I. items.

14. Equipment located above finished ceiling requiring access for maintenance and service. In locations where acoustical lay-in ceilings occur indicate areas in which the required access area may be greater than the suspected grid systems.

15. Rainwater Piping.

16. Existing conditions, including, but not limited to, Mechanical, Plumbing, Fire Protection and Electrical items.

17. ATC panels.

18. Pneumatic tube system.

P. The Architect's response to all requests for information (RFI's) generated by the trade contractors shall be distributed to all other affected trades as if this information was contained in the original contract documents. In other words, the party that issues an RFI is responsible for distributing the information to all affected parties.

1.10 RECORD DRAWINGS

A. Each Contractor shall maintain, current at the site, a set of Contract Drawings for his portion of the work on which he shall accurately show the actual installation of all work provided under his Contract indicating any variation from the Contract Drawings, in accordance with the General Conditions and Supplementary General Conditions. Changes whether resulting from formal change orders, requests for information, or other instructions issued by the Architect shall be recorded. Include changes in sizes, location and dimensions of piping, ducts, equipment, etc.

B. Each Contractor shall indicate progress by coloring-in various pipes, ducts and associated appurtenances exactly as they are erected. This process shall incorporate both the changes noted above and all other deviations from the original drawings whether resulting from job conditions encountered or from any other causes.

C. The marked-up and colored-up prints will be used as a guide for determining the progress of the work installed. They shall be inspected periodically by the Architect and Owner's representatives and they shall be corrected if found either inaccurate or incomplete. This procedure is mandatory. Marked up drawings shall include all flow diagrams, schedules, details and control diagrams.

D. Each Contractor shall meet at a minimum on a monthly basis, with the Owner's representative to transfer the information from his HVAC, Plumbing, Fire Protection, etc., marked-up and colored-up prints to a set which will become the basis for preparation of as-built drawings.

E. Upon completion of the project, each Contractor shall submit his marked-up drawings to the Architect for review and comment. After the Architect reviews and comments on this set of documents, each Contractor shall prepare as-built drawings on CAD using AutoCAD (Latest Version). When the work is completed, each Contractor shall provide 2 hard copies to the Architect for submittal to the Owner and disks with all documentation and a set of reproducible drawing plots marked "As-Built" drawings. The Contractor shall bear all costs of producing the CAD "As-Built" drawings, providing all necessary drawing changes and printing the reproducible drawings for the work under his charge.

1.11 GIVING INFORMATION

A. Each Contractor shall keep himself fully informed as to the shape, size and position of all openings required for his apparatus and shall give information to the Architect and other Contractors [or Subcontractors] sufficiently in advance of the work so that all openings may be built in advance.

B. The manufacturers listed within this specification have been preselected for use on this project. No submittal will be accepted from a manufacturer other than those specified. Should any Contractor wish to propose a substitution during the bid period, such request shall be made in writing to the Architect, at least (15) working days, prior to bid date. If substitutions are deemed acceptable, such items shall be issued as an Addendum, prior to bid due date. The above requirement is mandatory.

1.12 EQUIPMENT AND MATERIALS

A. Equipment and materials shall be delivered to the site and stored in original sealed containers, suitably sheltered from the elements, but readily accessible for inspection by the Architect until installed. All items subject to moisture damage such as controls, filters, etc., shall be stored in dry, heated spaces.

B. Each Contractor shall have his equipment tightly covered and protected against dirt, water and chemical or mechanical injury and theft. At the completion of the work, equipment and materials shall be cleaned, polished thoroughly and turned over the Owner in a condition satisfactory to the Architect. Damage or defects developing before acceptance of the work shall be made good at each Contractor's [or Subcontractor's] expense as applicable.

C. Each Contractor shall make necessary field measurements to ascertain space requirements, for equipment and connections to be provided under his Trade and shall furnish and install such sizes and shapes of equipment to allow for the final installation to conform to the drawings and specifications.

D. Manufacturers' directions shall be followed completely in the delivery, storage, protection and installation of any equipment. Promptly notify the Architect in writing of any conflict between any requirements of the Contract Documents and the manufacturer's directions and obtain the Architect's written instructions before proceeding with the work. Should any Contractor perform any work that does not comply with the manufacturer's directions or written instructions from the Architect, he shall bear all costs arising in correcting any deficiencies that should arise.

E. Each Contractor shall furnish and install all equipment, accessories, connections and incidental items necessary to fully complete the work under his Contract for use, occupancy and operation by the Owner.

F. Where equipment of the acceptable manufacturers requires different arrangement or connections from those shown, it shall be the responsibility of each Contractor to install the equipment to operate properly and in harmony with the original intent of the drawings and specifications. When directed by the Architect, each Contractor shall submit drawings showing the proposed installation. If the proposed installation is approved, each Contractor shall make all necessary changes in all effected related work provided under other Sections including location of roughing-in connections by other Trades, electrical requirements, piping, supports, insulation, etc. All changes shall be made at no increase in the Contract amount or additional cost to the other Trades and/or Owner.

G. Testing Agency Labeling Requirements

1. All equipment and materials required for installation under these specifications shall be new and without blemish or defect.

2. Equipment and materials shall be products which will meet with the acceptance of the Authorities Having Jurisdiction over the work and as specified hereinbefore.

3. Where such acceptance is contingent upon having the FM Global, it shall be provided with FM Global label. Factory manufactured and assembled packaged equipment, such as the examples of equipment listed below, shall have the entire assembled package inspected and Labeled by Factory Mutual.

4. All equipment shall meet OSHA standards.

5. All products shall be listed and labeled by UL or other national testing laboratories such as ETL and the products shall be so labeled.

   a. Label of Underwriter's Laboratories, ETL or other nationally recognized testing agency acceptable to the Authorities Having Jurisdiction.

   b. This Labeling shall include not just the control panel and/or motor but all wiring and devices included in the package as a complete package. Note: Providing a series of individually labeled electrical devices that are then assembled into a package does not meet this requirement, the whole assembly must be labeled as an assembly. The manufacturers have the option of having the equipment inspected and Labeled at the factory or at the site after installation. This requirement shall supersede any other specification language hereinbefore or hereinafter that requires only portions of the equipment to be labeled.

   c. Some examples of packaged equipment requiring Labeling:

      1) Sump pumpsets
      2) Ejector pumpsets
      3) Laboratory waste ejector pumpsets
      4) Fuel oil transfer pump skids
      5) Steam condensate pumpsets
      6) Duplex air compressor system
      7) Air handling units (packaged and custom built-up)
      8) Cooling towers
      9) Chillers
      10) Boilers
      11) Feed water equipment
      12) pH Neutralization system skids
      13) High purity water system skids (such as RODI units)
      14) Laboratory and/or Medical Air compressor skids
      15) Vacuum pumpsets
      16) Water pressure booster systems
      17) Animal watering system skids
      18) Cooling tower water filtration system

6. HVAC/Smoke Control System Operation

   a. On/Auto/Off switches and status indicators (LEDS) shall be provided for monitoring and manual control of each fan, damper, HVAC control unit, stairwell pressurization fan, space pressurization and smoke exhaust fan. To ensure compliance, the units supplied shall meet the following **UL**

categories: UUKL, PAZX, UDTZ, QVAX as well as the requirements of NFPA 90A, HVAC, and NFPA 92A & 92B, Smoke Control. The control system shall be field programmable for either 90A operation or 92A/B operation to allow for future use and system expansion.

b. All devices shall be UUKL listed.

H. All equipment of one type (such as valves, fans, air handling units [packaged or custom built], air terminals, heat pumps, plumbing fixtures, etc.), shall be the product of one manufacturer.

I. Equipment prepurchased on behalf of the Owner or by the Owner himself, if assigned to any of the Contractors, shall be received, inspected, installed, etc., as if it was purchased by the Contractors as applicable. All guarantees, service contracts, etc., shall be the same as for all other equipment provided under this Contract.

1.13 CUTTING AND PATCHING

A. Each Contractor shall be responsible for all core drilling, as required for work under his Contract, but in no case shall he cut into any structural elements without the written approval of the Architect.

B. All cutting, rough patching and finish patching, shall be provided under this Contract.

C. All concrete and masonry equipment bases shall be provided under this Contract.

1.14 USE OF PREMISES

A. Each Contractor shall confine all of his apparatus, storage of materials and construction to the limits indicated on the drawings and directed by the Architect and he shall not encumber the premises with his materials.

B. In storing materials within areas (structure or ground), or when used as a shop, each Contractor shall consult with the Construction Manager and shall restrict his storage to space designated for such purposes. Each Contractor will be held responsible for repairs, patching or cleaning arising from any unauthorized use of premises.

C. Notwithstanding any approvals or instructions which must be obtained by each Contractor from the Architect in connection with use of premises, the responsibility for the safe working conditions at the site shall remain each Contractor's. The Architect or Owner shall not be deemed to have any responsibility or liability in connection therewith.

D. Air handling unit or cooling tower sections shall not be used for storage of materials. The HVAC Contractor will be responsible for securing, and maintaining the equipment clean. The above requirement is mandatory.

1.15 PROTECTION/CLEANLINESS

A. All materials such as valves, fittings, piping, ductwork, plenums, grilles, registers, diffusers, etc., shall be properly protected from the accumulation of dirt, dust, debris or any other contaminants. All ductwork and piping openings shall be temporarily closed by each Contractor [or Subcontractor] installing same, so to prevent obstruction and damage, as a minimum at the end of each working day or more often if required by job conditions. Each Contractor shall take precautions to protect his materials from damage and theft.

B. Each Contractor shall furnish, place and maintain proper safety guards for the prevention of accidents that might be caused by the workmanship, materials, equipment or electrical systems provided under his Contract.

1.16 DAMAGE CORRECTION AND EXTRA WORK

A. Each Contractor shall be held responsible and shall pay for all damages caused by his work to the new and existing building structures and new and existing equipment, piping, duct systems, etc., and all work and finishes installed under this Contract in the new or in existing building. Repair of such damage shall be done as herein before specified, at the expense of each Contractor and to the Architect's satisfaction.

B. Each Contractor shall promptly correct all work provided under his Contract and rejected by the Architect as defective or as failing to conform to the Contract Documents whether observed before or after completion of work and whether or not fabricated, installed or completed. Each Contractor shall bear all costs of correcting such rejected work.

C. No claim for extra work will be allowed unless it is authorized by the Architect in writing before commencement of the extra said work.

1.17 TOUCH-UP PAINTING

A. Each Contractor shall thoroughly clean all equipment and systems provided under this Contract from rust, splatters and other foreign matter or discoloration, leaving every part of each system in an acceptable prime condition. Each Contractor, for the work under his Contract, shall refinish and restore to the original condition all equipment and piping which has sustained damage to the manufacturer's prime and finish coats of paint and/or enamel.

1.18 HOUSEKEEPING PADS

A. Coordinate housekeeping pads for:

1. All equipment indoors or outdoors

2. All floor supports or braces

B. Pads shall be 4" above the finished floor.

C. Each pad shall be a minimum of 6" larger then the equipment, support or isolation base in all directions.

D. Pads shall be formed, poured with concrete, and tooled by the General Contractor.

1.19 SEISMIC

A. Provide seismic restraints and seismic certified equipment in full compliance with ASCE Standard 7.

1. This shall be in compliance with Division 23 Specifications and provided by the Division 25 Contractor.

1.20 DUCT AND PIPE SLEEVES, PLATES AND ESCUTCHEONS, FIRESTOPPING AND SMOKEPROOFING

A. Where piping and/or ductwork pass through masonry or concrete walls or drywall partitions or floors, each Contractor shall provide and set individual sleeves for each pipe or duct and all other work under his charge, as necessary for passage of all pipes and/or ducts. Sleeves shall be of sufficient size to provide 1/2" air space around the pipe or duct passing through (including insulation where pipes or ducts are externally insulated). All openings shall be sealed, smokeproofed and made tight. Each Contractor shall be responsible for the exact location of sleeves provided under his Contract and shall coordinate all requirements for piping and ductwork sleeves.

B. Each Contractor, for work under his charge, shall determine the required inside diameter of each individual wall opening or sleeve before ordering, fabrication or installation.

C. Sleeves and inserts shall not be used in any portions of the building, where their use would impair the strength or construction features of the building. Elimination of sleeves must be approved by the Architect.

D. Provide chrome plated brass escutcheons with set screw for exposed piping, in all areas except in mechanical rooms. In this area use plain brass or cast iron escutcheons suitable for painting. All escutcheons shall be sized to fit the bare pipe or insulation in a snug and neat manner. They shall be of sufficient size to cover sleeved openings for the pipes and of sufficient depth to cover sleeves projecting above floors. Escutcheons shall be as manufactured by Beaton & Caldwell, Dearborn Brass, or Grinnell.

E. Pipe or duct sleeves shall be made of Schedule 40 pipe, 20 gauge galvanized steel or 16 gauge steel as follows:

1. Sleeves on pipes passing through masonry or concrete construction shall be Schedule 40 pipe.

2. Sleeves on ducts passing through concrete construction shall be 20 gauge steel unless required otherwise by item 4. below.

3. Sleeves on pipes or ducts passing through fire rated partitions shall be 16 gauge steel.

4. Sleeves on pipes or ducts passing through non-rated drywall construction shall be 20 gauge galvanized steel.

F. Pipe or duct sleeves shall be set as follows:

1. Set sleeves 1" above finish floor, (except set sleeves, 6" above finish floor at penthouses or mechanical rooms and 6” above finished roof) and flush on each side of walls. Coordinate roof penetrations with roof Subcontractor.

2. Sleeves shall be set securely in place before concrete is poured when placed in concrete construction.

3. Provide sheet metal sleeves for all duct penetrations and cover with sheet metal plates all penetrations after ductwork has been installed through walls/floors.

G. Each Contractor shall fire stop, smoke stop, and/or acoustically seal the space between the sleeves provided under his Contract and piping or ductwork as applicable, as follows:

1. See specification Section 230584 Through Penetration Firestopping System

H. Except as otherwise specified, underground piping passing through exterior walls or foundation slabs on grade, shall have penetration closures of the modular mechanical type, consisting of interlocking synthetic rubber links shaped to continuously fill the annular space between the pipe and wall opening. Links shall be loosely assembled with bolts to form a continuous belt around the pipe and with a pressure plate under each bolt head and nut. After the seal assembly is positioned in the sleeve, tightening of the bolts shall cause the rubber sealing elements to expand and provide an absolutely watertight seal between the pipe and wall, reducing chances of cathodic reaction between these members. Each Contractor for work under his charge shall determine the required inside diameter of each individual wall opening or sleeve before ordering, fabrication or installation. The inside diameter of the wall opening shall be sized to fit the pipe and ensure a watertight joint. Where applicable, when installing seals, take into account the pipe O.D. if non-standard due to coating or jacketing.

1.21 MISCELLANEOUS IRON AND STEEL

A. Each trade shall provide all primary and secondary steel supports and hangers as shown on the drawings and/or as required to support equipment, ductwork, piping, exhaust fans, or any other materials provided under the work of this Section.

B. The work of this Section of designing, furnishing and installing all miscellaneous metal work associated with the system, and related items as indicated on the drawings and/or as specified herein, and includes, but is not limited to the items listed herein below.

C. The scope of work shall include:

1. Control equipment support platforms including ship ladders, steel grating for decking, cross-bracing and floor stands.

2. Intermediate beams to hang equipment and piping from the roof. All piping and ductwork must be hung from beam or supported from the floor. Provide supplemental steel for support of equipment.

3. Support of equipment and piping in shafts in addition to support provided by structure.

4. Support via floor stands as required.

5. Seismic joint movements.

6. Piping support in underground concrete trench and manholes.

7. Seismic restraints.

8. Pipe anchors in the building.

9. Hangers, brackets, angel irons or rods required for the support and protection of control equipment.

10. Field prime painting of galvanized steel and field finish painting.

D. Shop Drawings for General Miscellaneous Items

1. Submit Shop Drawings of all miscellaneous metal items to Architect for approval, showing sizes and thickness of all members, types of materials, methods of connection and assembly, complete dimensions, clearances, anchorage, relationship to surrounding work by other Trades, shop paint, and other pertinent details of fabrication and installation.

E. The Subcontractor shall engage the services of a Professional Engineer registered within the state wherein the project is located to prepare complete Design Drawings and structural design computations based on, and closely following, the design and details on the Drawings. The Design Drawings and structural design computations, with the Engineer's seal affixed thereto, shall be submitted to the Architect for review. The structural design computations shall provide a complete structural analysis, including anchors and fastening devices, and shall certify as to conformation to governing laws and codes. These submittals, upon review, must be sufficient, when taken in conjunction with this Specification to provide the complete basis of the fabrication and erection.

F. Samples

1. Submit duplicate samples of all materials to be furnished under this Section if, and in size and form, requested by Architect.

G. Do not order materials or begin fabrication until Architect's approval of submittals has been obtained.

H. In addition to the governing laws and codes, the following Specifications and Codes form a part of this Specification:

1. American Iron and Steel Institute applicable standards.

2. American Institute of Steel Construction "Code of Standard Practice for Steel Buildings and Bridges" and "Specifications for the Design, Fabrication and Erection of Structural Steel for Buildings".

3. American Welding Society Code: Standard Code for Arc and Gas Welding in Building Construction.

I. All materials shall be new stock, free from defects impairing strength, durability or appearance and of best commercial quality for each intended purpose.

1. Unless other wise specifically called for, work of this Section shall be fabricated of structural steel conforming to ASTM Specification A36.

2. Steel pipe shall be seamless steel pipe conforming to ASTM Specification A53, Schedule 40.

3. Steel tubing shall be seamless steel tubing conforming to ASTM Specifications A500 to A501.

4. Construction specialties such as slotted inserts, wedge inserts, etc., shall be as manufactured by Hohmann and Barnard, Gateway Erectors, Inc., Richmond Screw Anchor Co. or equal approved by Architect.

5. Non-ferrous metals shall be as specified under descriptions of specific items, herein below.

J. Provide all anchors, bolts, sockets, sleeves, and other parts required for securing each item of work of this Section to the construction, including furnishing to concrete workers all required insets and sleeves for use at concrete.

1. All exposed fastenings shall be of the same material and finish as the metal to which applied, unless otherwise noted.

2. Welding rods shall conform to AWS Standards and the recommendation of the welding rod manufacturer.

3. Shop primer for other ferrous surfaces shall be a high-quality, lead-free, rust-inhibitive primer, Tnemec No. 10-99 Metal Primer or equivalent by Devoe and Raynolds Co., Carboline or equal.

K. Metal surfaces shall be clean and free from mill scale, flake, rust and rust pitting. metal work shall be well formed and finished to required shape and size, true to details, with straight, sharp lines and angles and smooth surfaces. Curved work shall be true radii. Exposed sheared edges shall be eased.

L. Weld all permanent connections. Welds shall be continuous on all exposed surfaces and where required for strength on concealed surfaces. Exposed welds shall be ground flush and smooth, with voids filled with metallic filling compound (metallic filling compound not permitted on surfaces to receive hot-dip galvanizing). Tack-welding will not be permitted unless specifically called for. Do not use screws or bolts where they can be avoided. Where used, heads shall be countersunk, screwed up tight, and threads nicked to prevent loosening.

M. Fastenings shall be concealed where practicable. Thickness of metal and details of assembly and supports shall give ample strength and stiffness. Joints exposed to weather shall be formed to exclude water.

N. Do all cutting, punching, drilling and tapping required for attachment of anchor bolts and other hardware and for attachment of work by other Trades. All such cutting, punching, drilling, etc., shall be done prior to hot-dip galvanizing of the various components.

O. Live loads shall be not less than the minimum required by law. Where specific live load are not set forth in the laws and codes applicable to this work, and are not given on the Drawings or in this Specification, designs shall be such as to support the live loads which may normally be imposed without failure, without deflection of more than 1/360 of length of any member, and without permanent deformation, all with a factor of safety of not less than 2 1/2 to 1.

P. Shop Painting

1. All ungalvanized ferrous metals under this Section shall be given a shop coat of rust inhibitive primer of type specified above.

   a. Immediately before shop painting, remove all rust, loose mill scale, dirt, weld flux, weld spatter, and other foreign material with wire brushes and/or steel scrapers. Power tool clean in accordance with SSPC SP-3 (Power Tool Cleaning). Remove all grease with oil by use of solvent recommended by paint manufacturer. Sandpaper exposed surfaces as required to produce smooth, even finishes.

   b. Apply paint by spray process in strict accordance with manufacturer's printed instructions to uniform thickness(es) recommended by manufacturer. Apply thoroughly and evenly and work well into corners and joints taking care to avoid sags and runs.

   c. Do not paint surfaces to be embedded in concrete, or to be welded in the field. After field welds are complete, grind smooth and flush, thoroughly clean and then apply specified primer over all unprimed in the field by brush roller.

   d. After erection, sand smooth and retouch all portions of the shop coats chipped or damaged during erection, and coat all field welds and connections with primer equivalent to that used for the shop coat.

Q. Installation

1. All materials shall be carefully handled and stored under cover in manner to prevent deformation and damage to the materials and to shop finishes, and to prevent rusting and the accumulation of foreign matter on the metal work. All such work shall be repaired and cleaned prior to erection.

2. Work shall be erected square, plumb and true, accurately fitted, and with the tight joints and intersections. All anchors, inserts and other members to be set in concrete or masonry shall be furnished loose by this Trade to be built-into concrete and masonry and by those Trades as the work progresses. Later cutting or drilling shall be avoided wherever possible.

3. All metal work shall be rigidly braced and secured to surrounding construction, and shall be tight and free of rattle, vibration, or noticeable deflection after installed.

4. Where members, other than expansion bolts or inserts, are fastened into concrete, set such members in holes formed as specified below, and secure permanently in place by installation of proprietary-type expanding grout manufactured specifically for such purpose, used strictly in accordance with manufacturer's directions. Holes to receive members shall be formed with galvanized sheetmetal sleeves, expanded polystyrene foam, or other approved method to provide at least 1/2 inch clearance around entire perimeter. At exposed applications, hold expanding grout back 1/2 inch from finish surface and fill voids with Portland cement grout to match color and texture of surrounding concrete surface.

5. Electrolytic Isolation

   a. Where dissimilar metals are to come into contact with one another, isolate by application of a heavy coating of bituminous paint on contact surfaces in addition to shop coat specified above. Do not permit the bituminous paint in any way to remain on surfaces to be exposed or to receive sealant.

R. Description of Major Items

1. The items described below constitute the major part of the work of this Section, but are not intended or implied to cover each and every item that may be required to properly complete the work. Carefully review the Drawings to determine the full extent of the miscellaneous metal work required.

S. Steel Ladders/Platforms

1. Fabricate and install interior steel ladder at fans, air handling units, filter racks and all equipment requiring service. Ladders shall have a safety cage as required by OSHA regulations.

2. Except as may be otherwise indicated on the Drawings, ladder shall be minimum 16 inches wide, fabricated of minimum 3/8 inch by 2 1/2 inches hot rolled steel rails and minimum 3/4 inches outside diameter steel pipe rungs. Rungs shall be

spaced 12 inches on center and shall be continuously welded to the rails. Provide a pair of steel clip angles or wall brackets at bottom and steel anchor plates or wall brackets at top, welded to the rails, as indicated.

3. Exterior steel ladders shall be hot dip galvanized after fabrication as specified hereinbefore. Rungs are to have non-slip surfaces.

4. All shall be OSHA and ANSI compliant.

T. Gratings and Frames

1. Fabricated and install steel gratings and frames at fan platforms.

2. Steel grating frames shall consist of a steel angle perimeter frame constructed of steel angles, at least 4 inches by 4 inches by 3/8 inches carried around perimeter with coped or mitered, full-welded corners. Perimeter frames shall be anchored with 7/16 inch minimum diameter expansion bolts or other suitable devices of adequate capacity, at corners, two (2) per beam end, and spaced not more than 2 feet on center around full perimeter.

3. Steel Gratings shall be pressure-locked type, with bearing bars spaced 1 3/16 inch on center and cross-bars spaced 4 inches on center. Sizes of bars shall be as required by manufacturer's loading tables to limit deflection of any member across any span to 1/240th of the span at live load of 100 pounds per square foot. Gratings shall be as manufactured by Borden Metal Products, Co., Irving Subway Grating Co., Reliance Steel Products Co., approved by Architect.

4. All (gratings and) frames shall be hot-dip galvanized after fabrication as specified hereinbefore aluminum.

U. Miscellaneous Items

1. Carefully review all Drawings for miscellaneous metal items required but not specifically listed above, such as miscellaneous steel clip angles, miscellaneous steel bracketing, and other miscellaneous metal items as indicated on the Drawings, reasonably implied therefrom, or reasonably necessary for the thorough completion of the work.

2. Provide rigid and secure anchorage of all components whether or not specifically described in complete detail on the Drawings.

V. Piping supports shall be coordinated with the building structure and shall span between roof beams as required.

1.22 WATERPROOFING, FLASHING AND COUNTERFLASHING

A. Unless specifically indicated otherwise on the drawings, each Contractor shall provide all counterflashing and waterproofing of all piping, ductwork and equipment provided by him, which pierce roofs, walls and other weatherbarrier surfaces. All work under this paragraph shall be coordinated with the CM.

B. All work shall be performed in a workmanlike manner to ensure weatherproof installation. Any leaks developed due to each Contractor's work shall be repaired at his expense, to the Architect's satisfaction.

C. Pipes passing through slabs shall have the sleeve extended above floors as hereinbefore specified to retain any water and the space between the pipe and sleeve caulked waterproof fire stopping. The top and the bottom shall be sealed with monolastic caulking compound.

D. All flashing required for ductwork and piping penetrations shall be provided by the CM.

1.23 ELECTRICAL WORK, MOTORS, MOTOR CONTROLLERS

A. See Section 230513.

B. See Division 22 for Plumbing.

C. See Divisions 26, 27 and 28 for Electrical.

1.24 IDENTIFICATION OF MATERIALS

A. See Section 230553.

1.25 VALVE TAGS, NAMEPLATES AND CHARTS

A. See Section 230553.

1.26 PARTS LIST AND INSTRUCTIONS FOR OPERATION AND MAINTENANCE

A. Each Contractor shall thoroughly instruct the representative(s) of the Owner, to the complete satisfaction of the Architect, in the proper operation of all systems and equipment provided by him. Each Contractor shall make arrangements, via the CM as to whom the instructions are to be given in the operation of the basic and auxiliary systems and the periods of time in which they are to be given. The Architect shall be completely satisfied that the representative of the Owner has been thoroughly and completely instructed in the proper operation of all systems and equipment before final payment is made. If the Architect determines that complete and thorough instructions have not been given by each Contractor to the Owner's representative, then each Contractor shall be directed by the Architect to provide whatever instructions are necessary until the intent of this paragraph of the specification has been complied with. All time required for Owner's instruction to satisfy the above requirements shall be included in this Contract. No extra compensation for such instructions will be allowed.

B. Each Contractor, including but not limited to, the HVAC Contractor, shall submit to the Architect for approval, a total of (6) typed sets, bound neatly in loose-leaf binders, of all maintenance and operating instructions for the installation, operation, care and maintenance of all equipment and systems. All data and literature furnished shall be specific for the make and model of the equipment furnished. General non-specific catalog data will not be acceptable. Information shall indicate possible problems with equipment and suggested corrective action. The manuals shall be indexed for each type

of equipment. Each section such as fans, valves, plumbing fixtures, hot water heaters, boilers, air handling units, etc., shall be clearly divided from the other sections. A sub-index for each section shall also be provided. The methodology of setting-up the manuals shall be submitted to the Architect and Owner through the General Contractor for approval prior to final submission of manuals.

C. The instructions shall contain information deemed necessary by the Architect and shall include, but not be limited to, the following:

1. Instructional classes on equipment and systems operation for Owner's representative and maintenance personnel, by engineering staff of each Contractor. Minimum of 48 hours of instruction for minimum of (6) people. Instruction shall include:

   a. Explanation of manual and its use.
   b. Summary description of the HVAC systems.
   c. Purpose of systems.

2. System

   a. Detailed description of all systems.
   b. Illustrations, schematics, block diagrams, catalog cuts and other exhibits.

3. Operations

   a. Complete detailed, step-by-step, sequential description of all phases of operation for all portions of the systems, including start-up, shutdown, adjusting and balancing. Include all posted instruction charts.

4. Maintenance

   a. Parts list and part numbers.

   b. Maintenance, lubrication and replacement charts and manufacturer's recommendations for preventive maintenance, as applicable to his work.

   c. Troubleshooting charts for systems and components.

   d. Instructions for testing each type of part.

   e. Recommended list of on-hand spare parts.

   f. Complete calibration instructions for all parts and entire systems.

   g. Instruction for charging, filling, draining and purging, as applicable.

   h. General or miscellaneous maintenance notes.

5. Manufacturer's Literature

a. Furnish complete listing for all parts required for models actually furnished.

b. Names, addresses and telephone numbers of manufacturers and suppliers.

c. Describe and operation of all models actually furnished.

d. Furnish all and only pertinent brochures, illustrations, drawings, cuts, bulletins, technical data, certified performance charts and other literature with the model actually furnished to be clearly and conspicuously identified.

e. Internal wiring diagrams and engineering data sheets for all items and/or equipment furnished under each Contract.

f. Guarantee and warranty data.

6. Each Contractor shall furnish instructions for lubricating each piece of equipment installed by him. Instructions shall state type of lubricant, where and how frequently lubrication is required. Frame instructions under glass and hang in a location as directed by Architect.

1.27 MANUFACTURER'S REPRESENTATIVE AND COMMISSIONING OF SYSTEMS

A. Each Contractor shall provide, at appropriate time or as directed by the Architect, the on-site services of a competent factory trained Engineer or authorized representative of particular manufacturer of equipment provided under his Contract, such as for the air handling units, automatic temperature controls, building automation system (BAS), fire pump, domestic hot water heaters, boilers, etc., provided under this Contract, to instruct the Owner, inspect, adjust and place in proper operating condition any item provided by him, as applicable.

B. The HVAC Contractor, as applicable, shall commission and set in operating condition all major equipment and systems, such as the condenser water, hot water and all air handling systems, etc., in the presence of the applicable equipment manufacturer's representatives, and the Owner and Architect's representatives. In no case will major systems and equipment be commissioned by any of the Contractor's forces alone, without the assistance or presence of the equipment manufacturers.

C. A written report shall be issued by the particular equipment manufacturer and the Mechanical Contractor summarizing the results of the commissioning and performance of each system for the Architect's record. No additional compensation will be allowed for any Contractor for such services.

D. The Contractor shall prepare and submit to the Architect for acceptance, a schedule of anticipated system commissioning. No system shall be commissioned without prior acceptance of the schedule by the Architect and Owner. No systems shall be commissioned prior to submittal and acceptance of Operation and Maintenance Manuals.

1.28 CONNECTIONS TO EQUIPMENT

A. Each Contractor shall provide all duct and/or pipe connections, condensate traps, drains, overflows, relief valves and vents, power connections, etc., to make equipment operable, as provided under other Sections of the specifications, as shown on the Architectural and/or each Trade's drawings and herein specified, including final connections to equipment to result in a complete system, fully operational. Coordinate location of all equipment with Architect. Obtain installation diagrams and methods of installation of all equipment from manufacturers. Follow instructions strictly. If additional information is required, obtain same from Architect. If equipment is indicated on the Architectural drawings, it shall also be construed and understood by the Mechanical Contractor to be constructed as shown on the HVAC drawings and shall be fully serviced and connected at no extra cost to the Owner.

1.29 SMOKE DETECTION AND FIRE SAFETY SYSTEMS

A. All duct or unit mounted smoke detectors shall be furnished and wired to the building fire alarm system by the Electrical Contractor. All smoke detectors required in units and ducts and for smoke barrier dampers shall be installed in the field by the HVAC Contractor. Refer to the Contractor Coordination Matrix contained under item 1.30 of this section.

B. All smoke dampers shall be furnished and by the HVAC Contractor with electric actuators and field wired by the ATC Contractor.

C. The Electrical Contractor, when providing smoke detectors, shall include additional contacts, as required and coordinated with the ATC Contractor, to allow for other control functions, as specified hereinafter. Close coordination must be exercised to allow for the provision of contacts.

D. All smoke detectors shall be installed as recommended by the smoke detection system manufacturer in sheet metal ducts or plenums to ensure that the sensing elements are effective and shall coordinate installation of smoke detectors with the Electrical Contractor and detector manufacturer.

E. The HVAC Contractor shall provide access doors to make all such detection heads accessible, and shall provide bracing for smoke detection sampling tubes, as recommended by the detector manufacturer, to properly and securely support such tubes.

F. If duct smoke detectors are required to be installed in ducts that are exposed to outside ambient conditions, they shall be installed in ventilated accessible weatherproof enclosures. See details on HVAC Drawings.

1.30 ELECTRICAL ROOM REQUIREMENTS

A. The HVAC Contractor [or Subcontractors] shall not install any piping, ductwork or equipment in or through electrical rooms, transformer rooms, electrical closets, telephone rooms or elevator machine rooms, unless piping, ductwork or equipment is intended to serve these rooms. If any Contractor violates this requirement, he shall

remove and/or relocate all items as required at his expense and to the satisfaction of the Architect.

1.31 HOISTING EQUIPMENT AND MACHINERY

A. All hoisting equipment and machinery required for the proper and expeditious prosecution and progress of the work under this Contract shall be furnished, installed, operated and maintained in safe condition by each Contractor for his material and/or equipment delivered to the designated hoisting area. All costs for hoisting operating services shall be borne by the Mechanical Contractor for all equipment and work under his charge.

1.32 STAGING

A. All staging, exterior and interior, required to be over 8'-0" in height shall be furnished and erected by each Contractor for work under his charge and maintained in safe condition by him for proper execution of his work.

1.33 PHASING AND MAINTAINING EXISTING SERVICES

A. During the execution of the work, required relocation of existing equipment and systems in the existing areas where new work and connections are scheduled to be made shall be performed by each Contractor as indicated on the drawings, as required by the job conditions and as determined by the CM in close cooperation with the Architect and Owner's designated representative to facilitate the installation of the new systems and completion of this Contract. Outages required for construction purposes shall be scheduled for the shortest practical periods of time, in coordination with the Owner's designated representative for specific, mutually agreeable periods of time after each of which the interruption shall cease and service shall be restored. This procedure shall be repeated to suit the Owner's working schedule as many times as required until all work is completed.

B. Prior to any deactivation and relocation, capping, valving, tie-in or demolition work, consult the drawings and arrange a conference with the Architect and the Owner's representative in the field to inspect each of the items to be deactivated, removed or relocated. Care shall be taken to protect all equipment designated to be relocated and reused. Give notice to all parties, with a minimum of (5) working days in advance.

C. All draining of existing systems, filling and venting required to remove and relocate existing piping systems shall be included and provided under this Contract as required to perform the various equipment or piping relocations or new tie-ins.

D. Except as otherwise noted, all deactivation, safe capping, valving, etc., of systems designated to be demolished shall be provided by each Trade, as applicable, and all demolition, removal and disposal of demolished materials shall be performed by the CM. All equipment scheduled to be removed shall be inspected by the Owner, and, if he decides that such equipment is to be salvaged, each Contractor shall deliver said equipment to an area within the site boundaries as determined by the Owner and Architect.

E. The phasing of the work shall be performed in strict accordance with the CM construction schedule. The new systems will be installed and completely commissioned prior to occupancy. Coordinate requirements for temporary heat or rerouting of existing services as required to accomplish the construction schedule.

1.34 CONTROL WIRING

A. The ATC Contractor shall provide all control and interlock wiring for all systems provided under the HVAC, plumbing and ATC Contracts.

B. All control wiring shall be installed in conduit and in accordance with the respective equipment manufacturer's requirements, and all connections shall be provided by the ATC Contractor. All conduit and wiring provided by these Contractors shall be installed in accordance with the requirements of Section 26 of the specifications.

1.35 COMPONENT COORDINATION

A. The HVAC, ATC and Electrical Contractors Scope of Work shall be implements in accordance with the following matrix:

Device	Furnished By	Installed By	Power Wiring	Control Wiring	Fire Alarm Wiring
Smoke Detectors	26	23	26	25	26
Smoke Dampers at AHUs	23	23	N/A	N/A	N/A
Smoke Damper Actuators at AHUs	Damper Mfr	23	26	25	N/A
Smoke Control Dampers	23	23	N/A	N/A	N/A
Smoke Control Dampers (Floor) Actuators	23	23	26	25	N/A
Fire Dampers	23	23	N/A	25	N/A
Supply and Exhaust Boxes	23	23	25	25	N/A
Box Flow Pick-Up	Box Mfr	Box Mfr	N/A	Box Mfr	N/A
Box Damper Actuator	25	Box Mfr	25	25	N/A
Box DDC Controller	25	Box Mfr	25	25	N/A
Box Coil Valve	25	23	N/A	25	N/A
Supply/Exh. & Hood Valves	25	23	N/A	25	N/A
Valve Actuator	25	25	N/A	25	N/A
Supply Valve Reheat Coil	23	23	N/A	N/A	N/A
Reheat Coil Valve	25	23	N/A	25	
Laboratory Control Panel	25	25	26	25	N/A
Controls at Fume Hood	25	25	25	25	N/A
Sheet Metal Damper	23	23	N/A	N/A	N/A
Sheet Metal Damper Actuators	25	25	N/A	25	
Energy Meters	25	23	26	25	N/A
Flow Measuring Stations	25	23	N/A	25	N/A
DDC Panels	25	25	26	25	N/A
Air Compressor	25	25	26	25	N/A
Air Dryer	25	25	26	25	N/A

Device	Furnished By	Installed By	Power Wiring	Control Wiring	Fire Alarm Wiring
Fuel Oil System	23	23	26	25	N/A
Control Valves	25	23	25	25	N/A
Humidifiers	23	23	N/A	25	N/A
Humidifier Valve	23	23	N/A	25	N/A
Humidifier Airflow Switch	25	25	N/A	25	N/A
VSDs at EAHU	23	23	26	25	N/A

PART 2 – PRODUCTS

2.1 NOT USED

PART 3 – EXECUTION

3.1 NOT USED

END OF SECTION 250500

SECTION 250630 – SCHEDULES

PART 1 – GENERAL

1.1 RELATED DOCUMENTS

A. Drawings and general provisions of the Contract, including General and Supplementary Conditions, Section 250500 and other Division 1 Specification Sections, apply to this Section.

B. LEED Building General Requirements: The Owner requires the Contractor to implement practices and procedures to meet the project's environmental performance goals, which include achieving LEED Certification. Specific project goals that may impact this area of work include: Use of recycled-content materials; use of locally-manufactured materials; use of low-emitting materials; construction waste recycling; and the implementation of a construction indoor air quality management plan. The Contractor shall ensure that the requirements related to these goals, as defined in the sections below, are implemented to the fullest extent. Substitutions, or other changes to the work proposed by the Contractor or their Subcontractors, shall not be allowed if such changes compromise the stated LEED Building Performance Criteria.

1. Comply with LEED (Leadership in Energy and Environmental Design) Green Building Rating System BD+C, Version 3.

1.2 WORK INCLUDED

A. Furnish and install temperature controls.

1.3 RELATED SECTIONS

A. Examine all drawings and criteria sheets and all other Sections of the Specifications for requirements which affect work under this Section whether or not such work is specifically mentioned in this Section.

B. Section 017419 "Construction Waste Management and Disposal" for requirements related to construction waste management and disposal at the project site.

C. Section 018113 "VOC Limits for Adhesives, Sealants, Paints and Coatings" for restrictions of VOC in adhesives, sealants, paints and coatings.

D. Section 018119 "Construction Indoor Air Quality (IAQ) Management" for requirements during construction for indoor-air-quality management.

1.4 SUBMITTALS

A. See Section 250500 and General Conditions for additional requirements.

B. Product Data: Provide data for duct materials.

C. Prepare and submit scaled coordination drawings.

D. Manufacturer's Installation Instructions.

1.5 QUALITY ASSURANCE

A. See Section 250500.

PART 2 – PRODUCTS

2.1 POINT SCHEDULE

A. Note: For point software association, see sequence of operation. All points shall be able to integrate to all trends, totalizations, etc., as applicable. For additional points, refer to PID drawings and sequences of operations. Additional points not specifically called for herein but required to perform the sequence as herein specified shall be provided at no additional cost to the Owner.

B. The BAS Contractor shall provide an allowance for an additional twenty (20) input/output points to be utilized at the Owners discretion. These points are in addition to the points listed below and any additional points required to properly execute the sequences required of the BAS in the contract documents. Each point shall include the following:

1. Fifty (50) feet of conduit and wire to connect to a field device.

2. Man hours to provide Engineering, documentation, start-up/checkout and graphic programming.

3. If an additional field device is required such as a sensor, damper, valve, etc; the cost of the field device shall not be included in this allowance.

SYSTEM POINT	**POINT**				**ALARMS**			**COMMENTS**
	AI	**AO**	**DI**	**DO**	**HI**	**LOW**	**OFF NORMAL**	
AHU- 100% OUTSIDE AIR DUAL SUPPLY FANS								
START/STOP SUPPLY FAN #1				X			X	
START/STOP SUPPLY FAN #2				X			X	
SUPPLY FAN #1 STATUS	2				2	2		VIA AMPERAGE SENSOR & DIFF. PRESSURE SENSOR
SUPPLY FAN #2 STATUS	2				2	2		VIA AMPERAGE SENSOR & DIFF. PRESSURE SENSOR
SUPPLY FANS HIGH STATIC SAFETY			2		X		X	VIA DELTA P SWITCH
OUTSIDE AIR INTAKE DAMPER			2	X				OPEN/CLOSE, WITH END SWITCHES

SYSTEM POINT	POINT				ALARMS			COMMENTS
	AI	AO	DI	DO	HI	LOW	OFF NORMAL	
SUPPLY FAN #1 ISOLATION DAMPER			2	X				OPEN/CLOSE, WITH END SWITCHES
SUPPLY FAN #2 ISOLATION DAMPER			2	X				OPEN/CLOSE, WITH END SWITCHES
COOLING COIL LEAVING AIR TEMP.	X				X	X		
UNIT SUPPLY DISCHARGE TEMP.	X				X	X		
OUTSIDE AIR TEMP.	X							
MODULATE COOLING COIL VALVE	X	X						PROVIDE VALVE POSITION FEEDBACK
MODULATE PREHEAT COIL VALVE	X	X						PROVIDE VALVE POSITION FEEDBACK
FREEZE THERMOSTATS (AT COOLING COIL)			X				X	
OUTSIDE AIR HUMIDITY AND TEMPERATURE	2							
SPACE RELATIVE HUMIDITY SENSOR (PROVIDE 2 PER AHU)	2							
PREHEAT COIL DISCHARGE AIR TEMP.	X				X	X		
GLYCOL RETURN TEMP. AT COIL	X				X	X		AHU-5
GLYCOL SUPPLY TEMP. AT COIL	X				X	X		AHU-5
SUPPLY SYSTEM STATIC PRESSURE (IN DUCTWORK)	X							
MODULATE SUPPLY FAN #1 SPEED VIA VFD		X	X				X	PROVIDE VFD TROUBLE ALARM AND ALL VFD POINTS SPECIFIED
MODULATE SUPPLY FAN #2 SPEED VIA VFD		X	X				X	PROVIDE VFD TROUBLE ALARM AND ALL VFD POINTS SPECIFIED
PREFILTER ΔP	X				X	X		
AFTER FILTER ΔP	X				X	X		
DISCHARGE HUMIDITY	X							REPLACEABLE RH SENSOR TIPS
EXHAUST RELATIVE HUMIDITY	X				X	X		LOCATED EACH AT EAHU INTAKE PLENUM, PROVIDE AVERAGING FOR BUILDING SENSING
HUMIDITY HIGH LIMIT SENSOR AT UNIT	X	X			X		X	RESET MAXIMUM HUMIDIFIER OUTPUT VIA THIS SENSOR
MODULATE HUMIDIFIERS (IN PARALLEL)	X	X						POSITION FEEDBACK FOR MODULATING VALVE
HUMIDIFIER AIRFLOW SWITCH			X				X	
HEAT RECOVERY WHEEL			X	X			X	AHU-2 thru 4
SUPPLY AIR SMOKE DETECTOR		X					X	EACH AHU

SYSTEM POINT	POINT				ALARMS			COMMENTS
	AI	AO	DI	DO	HI	LOW	OFF NORMAL	
SUPPLY FANS AIR VOLUME (FMS)	2							EACH AHU,2, FAN FMSs/UNIT
UNIT SMOKE ISOLATION DAMPER(S)			X				X	
AHU –RECIRCULATING FAN(S)								
SUPPLY FAN START/STOP (EACH)				X			X	
SUPPLY FAN STATUS (EACH	2				X	X		VIA PRESSURE SENSOR AND AMPERAGE
MODULATE SUPPLY FAN SPEED AND FLOW VIA VFD (EACH)	X	X						PROVIDE FREQUENCY (Hz) FEEDBACK
SUPPLY VFD TROUBLE ALARM (EACH)			X				X	
SUPPLY VFD MODE STATUS (EACH)			3					HAND/AUTO/BYPASS (BYPASS IF REQUIRED)
RETURN FAN START/STOP (EACH)				X			X	
RETURN FAN STATUS (EACH)	2				X	X		VIA PRESSURE SENSOR AND AMPERAGE
MODULATE RETURN FAN SPEED AND FLOW VIA VFD (EACH)	X	X						PROVIDE FREQUENCY (Hz) FEEDBACK
RETURN VFD TROUBLE ALARM (EACH)			X				X	
RETURN VFD MODE STATUS (EACH)			3					HAND/AUTO/BYPASS (BYPASS IF REQUIRED)
PREFILTERS ΔP	X				X		X	
FINAL FILTER ΔP	X				X		X	
FREEZE LOW LIMIT			X				X	
SUPPLY FAN HIGH STATIC			X				X	VIA DELTA P SWITCH (DUAL CONTACT DEVICE)
RETURN FAN HIGH STATIC			X				X	VIA DELTA P SWITCH (DUAL CONTACT DEVICE)
SUPPLY SMOKE DETECTOR			X				X	
RETURN SMOKE DETECTOR			X				X	
MODULATE O.A. DAMPER	X	X	X					POSITION FEEDBACK
MODULATE RETURN AIR DAMPER	X	X						POSITION FEEDBACK
MODULATE RELIEF AIR DAMPER	X	X						POSITION FEEDBACK
SUPPLY FAN (EACH IF REQUIRED) ISOLATION DAMPER			X	X				HARDWIRE INTERLOCK
RETURN FAN (EACH IF REQUIRED) ISOLATION DAMPER			X	X				HARDWIRE INTERLOCK
O.A. TEMP. & HUMIDITY	2							PROVIDE ENTHALPY CALCULATION
OA AIR VOLUME (FMS)	X							

SYSTEM POINT	POINT				ALARMS			COMMENTS
	AI	AO	DI	DO	HI	LOW	OFF NORMAL	
MIXED AIR TEMP.	X					X		
PREHEAT COIL LEAVING AIR TEMP.	X					X		
COOLING COIL LEAVING AIR TEMP.	X							
UNIT DISCHARGE AIR TEMPERATURE	X				X	X		
SUPPLY AIR VOLUME (FMS)	X							
SYSTEM STATIC PRESS. (IN-DUCT SUPPLY)	X				X	X	X	2/3 DOWN LONGEST DUCTWORK RUN, HARDWIRE TO AHU CONTROLLER
RETURN AIR TEMP.	X							PROVIDE ENTHALPY CALCULATION
RETURN AIR HUMIDITY	X							PROVIDE ENTHALPY CALCULATION
ECONOMIZER RELIEF DUCT (FMS) AND RETURN AIR VOLUME (FMS)	2				2	2	2	
MODULATE PREHEAT VALVE	X	X						PROVIDE VALVE POSITION FEEDBACK
MODULATE COOL VALVE	X	X						PROVIDE VALVE POSITION FEEDBACK
MODULATE HEAT PIPE VALVE								AHU-1
MODULATE REHEAT VALVE	X	X					X	PROVIDE VALVE POSITION FEEDBACK
LAB EXHAUST FANS								
START/STOP EXHAUST FAN				2				ONE PER FAN
STATUS EXHAUST FAN	2				2	2		VIA DELTA P SWITCH AND AMPERAGE SENSOR
EXHAUST FAN HIGH STATIC SAFETY	X				X	X	X	VIA DELTA P SENSOR
EXHAUST FAN ISOLATION DAMPER AT FAN OUTLET			X	X				OPEN/CLOSE, WITH END SWITCHES
EXHAUST FAN HIGH STATIC			X		X	X		VIA DELTA P SWITCH
HEAT RECOVERY COIL AIR ENTERING & LEAVING	4							2 PAIRS OF SENSORS
HEAT RECOVERY GLYCOL WATER SUPPLY & RETURN TEMPS	2							1 PAIR PER UNIT
EXHAUST SMOKE DETECTOR			X					
EXHAUST SYSTEM STATIC PRESSURE (IN-DUCT)	X				X		X	
MODULATE EXHAUST BLEED DAMPERS		2						PROVIDE END SWITCHES
EXHAUST AIR RELATIVE HUMIDITY	X							SIGNAL TO SUPPLY UNIT HUMIDIFIER, INITIAL SETPOINT = 25% RH

SYSTEM POINT	POINT				ALARMS			COMMENTS
	AI	AO	DI	DO	HI	LOW	OFF NORMAL	
EXHAUST FAN AIR VOLUME (FMS)	X							ONE PER EAHU IN DUCT
CENTRAL HOT GLYCOL/WATER PREHEAT/HEAT RECOVERY SYSTEM								
START/STOP GLYCOL PUMP (PRIMARY)	X			X			X	WITH STATUS VIA AMPERAGE AND FLOW SWITCH
START/STOP GLYCOL PUMP (STANDBY)	X			X			X	WITH STATUS VIA AMPERAGE AND FLOW SWITCH
MODULATE GLYCOL LOOP INJECTION CONTROL VALVE	X	X						PROVIDE VALVE POSITION FEEDBACK
START/STOP LOOP INJECTION PUMP	X		X				X	WITH STATUS
GLYCOL RETURN TEMP AT HEAT EXCHANGER	X				X	X		
GLYCOL SUPPLY TEMP AT HEAT EXCHANGER	X				X	X		
MODULATE GLYCOL HX STEAM VALVE	X	X						AT HEAT EXCHANGER WITH VALVE POSITION FEEDBACK
REHEAT /PERIMETER HEAT EXCHANGER SYSTEM								
REHEAT PUMP START/STOP (EACH PUMP)				X			X	
REHEAT PUMP STATUS (EACH PUMP)	X				X	X		VIA PRESSURE SENSOR AND AMPERAGE
MODULATE REHEAT PUMP SPEED AND FLOW VIA VFD (EACH PUMP)	X	X						PROVIDE FREQUENCY (Hz) FEEDBACK
REHEAT PUMP VFD TROUBLE ALARM (EACH PUMP)			X				X	
REHEAT PUMP VFD MODE STATUS (EACH PUMP)			3					HAND/AUTO/BYPASS (BYPASS IF REQUIRED)
PERIMETER ZONE PUMP			X	X				START/STOP AND STATUS VIA CURRENT SENSOR
PERIMETER ZONE PUMP			X	X				START/STOP AND STATUS VIA CURRENT SENSOR
REHEAT/ PERIMETER HEAT EXCHANGER FLOW SWITCH			X					EACH HEAT EXCHANGER
REHEAT/ PERIMETER HEAT EXCHANGER WATER SUPPLY TEMP. AT HEAT EXCHANGER	X				X	X		EACH HEAT EXCHANGER
REHEAT/PERIMETER HEAT EXCHANGER WATER RETURN TEMP. AT HEAT EXCHANGER	X				X	X		EACH HEAT EXCHANGER
REHEAT/ PERIMETER COMMON SYSTEM SUPPLY WATER TEMP	X				X			

SYSTEM POINT	POINT				ALARMS			COMMENTS
	AI	AO	DI	DO	HI	LOW	OFF NORMAL	
REHEAT/ PERIMETER COMMON SYSTEM RETURN WATER TEMP	X				X			
PERIMETER ZONE SUPPLY WATER TEMP	X				X			PER ZONE
PERIMETER ZONE RETURN WATER TEMP	X				X			PER ZONE
REHEAT SYSTEM DIFFERENTIAL PRESSURE	2							TWO SEPARATE LOCATIONS
RADIATION SYSTEM DIFFERENTIAL PRESSURE	2							TWO SEPARATE LOCATIONS
PERIMETER SYSTEM DIFFERENTIAL PRESSURE	2							TWO SEPARATE LOCATIONS
OUTSIDE AIR TEMP SENSOR	X				X			PER ZONE
RADIATION/PERIMETER SPACE SENSOR	X				X			PER ZONE
MODULATE STEAM VALVES (1/3-2/3)	2	2						WITH POSITION FEEDBACK
MODULATE PERIMETER 3-WAY ZONE TEMP. CONTROL VALVES		X						SEPARATE RESET SCHEDULE AND VALVE FOR EACH FACADE
CHILLER AND HEAT EXCHANGER								
OUTSIDE AIR TEMPERATURE	X							DEDICATED TO CHILLER PLANT
OUTSIDE AIR HUMIDITY	X							DEDICATED TO CHILLER PLANT
OUTSIDE AIR WETBULB	X							DEDICATED TO CHILLER PLANT
CHILLED WATER SYSTEM DIFFERENTIAL PRESSURE SENSORS	X							LOCATE AT END OF EACH RISER
CHILLED WATER TON-HOURS/MONTH	X							PER CHILLER GPM; CHS, CHR TEMPS.; PROVIDE CONVERSION CALCULATIONS
CHILLED WATER PRIMARY SYSTEM SUPPLY TEMP.	X				X	X		
CHILLED WATER PRIMARY SYSTEM RETURN TEMP.	X				X	X		
CHILLED WATER SECONDARY SYSTEM SUPPLY TEMP.	X				X	X		
CHILLED WATER SECONDARY SYSTEM RETURN TEMP.	X				X	X		
CHILLED WATER SUPPLY TEMP.	X				X	X		PER CHILLER
CHILLED WATER RETURN TEMP.	X				X	X		PER CHILLER

SYSTEM POINT	POINT				ALARMS			COMMENTS
	AI	AO	DI	DO	HI	LOW	OFF NORMAL	
CHILLED WATER PUMP (START/STOP & STATUS) (EACH PUMP)	X	X		X	X	X		VIA CURRENT SENSOR (EACH PUMP) (PROVIDE TOTAL RUNTIME)
SECONDARY CHILLED WATER PUMP (START/STOP & STATUS) (EACH PUMP)	X	X		X	X	X		VIA CURRENT SENSOR (EACH PUMP) (PROVIDE TOTAL RUNTIME)
PRIMARY CHILLED WATER SUPPLY FLOW	X							
PRIMARY CHILLED WATER RETURN FLOW	X							
SECONDARY CHILLED WATER SUPPLY FLOW	X							PROVIDE TONNAGE CALCULATION
SECONDARY CHILLED WATER RETURN FLOW	X							PROVIDE TONNAGE CALCULATION
SECONDARY PLATE-FRAME CHILLED WATER PUMP (START/STOP & STATUS) (EACH PUMP)	X	X		X	X	X		VIA CURRENT SENSOR (EACH PUMP) (PROVIDE TOTAL RUNTIME)
PLATE AND FRAME CHILLED WATER DIFFERENTIAL PRESSURE SENSORS	X				X	X	X	LOCATE AT END OF EACH RISER
PLATE AND FRAME CHILLED WATER BACKUP DIFFERENTIAL PRESSURE BYPASS VALVE CONTROLLER	X	X						FOR USE UPON SELECTION OF FULL SPEED BYPASS OF VFD
REMOTELY ACTIVATED SWITCHOVER BETWEEN PROCESS CHILLED WATER AND BUILDING CHILLER SYSTEM				X				
EXHAUST FANS (Typical for each fan)								
EXHAUST FANS START/STOP & STATUS			X	X			X	STATUS VIA ΔP SWITCH
CFM TRACKING AIR TERMINAL BOXES (Typical) AND PHOENIX TRACKING VALVES								
SPACE TEMP.	X				X	X		
AIRFLOW VOLUME	X				X	X		
SUPPLY AIR TEMP. DOWNSTREAM OF REHEAT COIL	X				X			PROVIDE REHEAT BTU CALCULATION
MODULATE AIR TERMINAL VALVE		X			X	X	X	
MODULATE REHEAT		X					X	
MODULATE EXHAUST BOX/VALVE DAMPER								
EXHAUST BOX/VALVE ACTUAL CFM								

SYSTEM POINT	POINT				ALARMS			COMMENTS
	AI	AO	DI	DO	HI	LOW	OFF NORMAL	
FAN COIL UNITS WITH ECM MOTORS								
SPACE TEMPERATURE	X				X	X		
DISCHARGE AIR TEMPERATURE	X				X	X		
MODULATE COOLING VALVE		X						
MODULATE HEATING VALVE		X						
MODULATE FAN SPEED		X						
FAN STATUS	X							CURRENT SENSOR
CONDENSATE PAN MOISTURE ALARM			X		X			
FAN COIL UNITS WITH STANDARD MOTORS								
SPACE TEMPERATURE	X				X	X		
DISCHARGE AIR TEMPERATURE	X				X	X		
MODULATE COOLING VALVE		X						
MODULATE HEATING VALVE		X						
START/STOP FAN				X				
FAN STATUS	X							CURRENT SENSOR
CONDENSATE PAN MOISTURE ALARM			X		X			
DIFFERENTIAL PRESSURE CONTROLS (Typical For Process Condenser Water; Process Chilled Water)								
DIFFERENTIAL PRESSURE	X				X	X		ACROSS SUPPLY & RETURN
MODULATE ΔP CONTROL VALVE		X					X	
LAB PRESSURIZATION CONTROL SYSTEM (Refer to LPCS Spec. and Sequences for points listing)								
PLUMBING EQUIPMENT – LABORATORY								
DOMESTIC WATER FLOW METER			X					FROM PULSE METERS
CITY WATER PRESSURE	X					X		SENSOR BY PSC
NON-POTABLE FLOW METER (LAB)			X					FROM PULSE METER (EACH)
NON-POTABLE FLOW METER (HVAC)			X					FROM PULSE METER (EACH)
IRRIGATION FLOW METER			X					FROM PULSE METER (EACH)
DOMESTIC WATER PRESSURE BOOSTER PUMP COMMON ALARM			X				X	
POTABLE WATER HEATERS	X				X	X		
NON-POTABLE WATER HEATERS	X				X	X		
SEWAGE EJECTOR PUMPS HIGH ALARM			X					FROM PANEL DRY CONTACTS
GROUND WATER SUMP HIGH LEVEL			X				X	FROM PANEL DRY CONTACTS
ELEVATOR SUMP PUMP HIGH WATER ALARM			X				X	FROM PANEL DRY CONTACTS

SYSTEM POINT	POINT				ALARMS			COMMENTS
	AI	AO	DI	DO	HI	LOW	OFF NORMAL	
HIGH PURITY WATER SYSTEM COMMON ALARM			X					FROM PANEL DRY CONTACTS
LAB AIR COMPRESSOR MOISTURE CONTENT ALARM			X				X	FROM PANEL DRY CONTACTS
LAB VACUUM PUMP SYSTEM COMMON ALARM			X				X	FROM PANEL DRY CONTACTS
OXYGEN PRESSURE TANK FARM/MANIFOLD			X			X		COMMON ALARM (EACH TANK FARM/MANIFOLD)
CO2 PRESSURE TANK FARM/MANIFOLD			X			X		COMMON ALARM (EACH TANK FARM/MANIFOLD)
NITROGEN PRESSURE TANK FARM/MANIFOLD			X			X		COMMON ALARM (EACH TANK FARM/MANIFOLD)
FIRE PROTECTION SYSTEM								
SYSTEM INLET WATER PRESSURE	X				X	X		CITY SIDE OF FIRE PUMP
BUILDING SYSTEM PRESSURE	X				X	X		PUMPS HEADER
EMERGENCY POWER								
EACH EMERGENCY POWER TRANSFER SWITCH ACTIVATED			3					FROM PANEL DRY CONTACTS
FIRE ALARM SYSTEM SIGNALS TO OCS								
FAS GENERAL ALARM			X				X	
FAS GENERAL TROUBLE ALARM			X				X	
ENERGY METERING								
ELECTRICITY DEMAND (KW)	2							TWO ELECTRIC SERVICES
ELECTRICITY CONSUMPTION (KWH)	2							TWO ELECTRIC SERVICES
CHILLED WATER TON-HOURS/MONTH	3							GPM; CHS, CHR TEMPS.; PROVIDE CONVERSION CALCULATIONS
STEAM FLOW & PRESSURE	2							POUNDS STEAM PER MONTH AND PEAK PER HOUR
CONDENSATE FLOW AND PH	2							
COLD AND ENVIRONMENT ROOM MONITORING (TYP. PER ROOMS/TYP. EACH LAB FLOOR)								
TEMP. SENSOR	X				X	X		EACH
TROUBLE ALARMS			X				X	COMMON ALARM

PART 3 – EXECUTION

A. Provide any other points required by the Sequences or other items specified in Divisions 21, 22, 23, 25 and 26.

B. Provide any additional points required for systems to function correctly.

END OF SECTION

SECTION 25 1000 – DIRECT DIGITAL/AUTOMATIC TEMPERATURE CONTROLS

PART 1 - GENERAL

1.1 RELATED DOCUMENTS

A. Drawings and general provisions of the Contract, including General and Supplementary Conditions, Section 250500 and other Division 1 Specification Sections, apply to this Section.

B. LEED Building General Requirements: The Owner requires the Contractor to implement practices and procedures to meet the project's environmental performance goals, which include achieving LEED Certification. Specific project goals that may impact this area of work include: Use of recycled-content materials; use of locally-manufactured materials; use of low-emitting materials; construction waste recycling; and the implementation of a construction indoor air quality management plan. The Contractor shall ensure that the requirements related to these goals, as defined in the sections below, are implemented to the fullest extent. Substitutions, or other changes to the work proposed by the Contractor or their Subcontractors, shall not be allowed if such changes compromise the stated LEED Building Performance Criteria.

1. Comply with LEED (Leadership in Energy and Environmental Design) Green Building Rating System BD+C, Version 3

1.2 WORK INCLUDED

A. Furnish and install a complete system of automatic temperature controls to make a fully operational and controllable building HVAC system. All components of the system – workstations, application controllers, unitary controllers, etc. shall communicate using the BACnet protocol, as defined by ASHRAE Standard 135-2008. No gateways shall be used for communication to controllers furnished under this section. It shall include but not be limited to all labor, materials, special tools, equipment, enclosures, power supplies, software, software licenses, Project specific software configurations and database entries, interfaces, wiring, tubing, installation, labeling, engineering, calibration, documentation, submittals, testing, verification, training services, permits and licenses, transportation, shipping, handling, administration, supervision, management, insurance, Warranty, specified services and items required by the Contract for the complete and fully functional Controls Systems.

B. The system shall be all electric DDC (direct digital control).

C. All system components shall be installed in accordance with local and State codes.

D. Secure all permits and local/State approval for all components and installation as specified under this Section.

E. Provide complete commissioning for all control system components and sequences of operation.

F. Preparation and submission of shop drawings.

G. Section 017419 “Construction Waste Management and Disposal” for requirements related to construction waste management and disposal at the project site.

H. Section 018113 “VOC Limits for Adhesives, Sealants, Paints and Coatings” for restrictions of VOC in adhesives, sealants, paints and coatings.

I. Section 018119 “Construction Indoor Air Quality (IAQ) Management” for requirements during construction for indoor-air-quality management.

1.3 RELATED SECTIONS

A. Examine all drawings and criteria sheets and all other Sections of the Specifications for requirements which affect work under this Section whether or not such work is specifically mentioned in this Section.

B. Division 21

C. Division 22

D. Division 23

E. Division 25

F. Division 26

1.4 REFERENCES

A. Applicable provisions of the following Codes and Trade Standard Publications shall apply to the work of this Section, and are hereby incorporated into, and made a part of the Contract Documents.

B. Material standards shall be as specified or detailed hereinafter and as follows:

1. NFPA 70 – National Electric Code.
2. UL-916 – Energy Management Systems.
3. UL-873 – Temperature Indication and Regulating Equipment.
4. FCC; Part 15, Subpart J – Class A computing Equipment.
5. UL-864 – Fire and Smoke Control.

1.5 SYSTEM DESCRIPTION

A. Furnish and install, as hereinafter specified, a combination direct digital/ electric/electronic temperature control system and Building Automation System (BAS). The system shall be comprised of a network of various independent Stand-alone Digital Controllers, electric/electronic control equipment, thermostats, sensors, controllers, valves, dampers, actuators, panels and related hardware, software and other accessory equipment, along with a complete system of electrical control wiring, and software

generation to fill the intent of the specifications and provide for a complete and operable system.

B. The Building Automation System (BAS) shall be designed in strict accordance with ASHRAE's BACnet standard, 135-2001, to provide interoperability between different building subsystems. The system shall also provide a graphical, web-based operator interface that allows for instant access to any system through a standard browser.

C. The system shall use BACnet network types and protocols exclusively. Non-BACnet-based systems are not acceptable. The contractor must provide PC-based programming workstations, operator workstations and microcomputer controllers of modular design providing distributed processing capability, and allowing future expansion of both input/output points and processing/control functions. Contractor must provide manufacturer's Protocol Implementation Conformance Statement (PICS) for workstation software and every controller model that are installed.

D. The control systems shall be installed by competent control mechanics and electricians regularly employed by the manufacturer of the control equipment. All control equipment shall be the product of one (1) manufacturer and all components shall be capable of interfacing with the HVAC equipment. The factory trained Contractor must maintain adequate staff and offer standard services to fully support the owner in the timely maintenance, repair, and operation of the control system. Contractors who do not maintain such staff and offer services or must develop some for this project are not acceptable.

E. Bids from franchised dealers or others whose principal business is not the manufacture, installation and service of temperature control systems will not be acceptable.

F. The Contractor shall submit a copy of the manufacturer's standard software and firmware licensing agreement for the owner's signature. Such license shall grant use of all programs and application software to Owner as defined by the manufacturer's license agreement, but shall protect manufacturer's rights to disclosure of trade secrets constrained within such software.

G. All products of the Building Automation System shall be provided with the following agency approvals. With the submittal documents, verification that the approvals exist for all submitted products shall be provided. Systems or products not currently offering the following approvals are not acceptable.

1. UL-916; Energy Management Systems

2. UL-873; Temperature Indication and Regulating Equipment UL-864; Subcategories UUKL, QVAX, UDTZ; Fire and Smoke Control Systems

3. FCC; Part 15, Subpart J, Class A Computing Devices

H. All products shall be labeled with the appropriate approval markings. System installation shall comply with NFPA, NEMA, Local and National Codes.

I. HVAC/Smoke Control System Operation:

1. On/Auto/Off switches and status indicators (LEDS) shall be provided by the Fire Alarm Contractor for monitoring and manual control of each fan, damper, HVAC control unit, stairwell pressurization fan, space pressurization and smoke exhaust fan. To ensure compliance, the units supplied shall meet the following **UL categories: UUKL, PAZX, UDTZ, QVAX** as well as the requirements of NFPA 90A, HVAC, and NFPA 92A & 92B, Smoke Control. The control system shall be field programmable for either 90A operation or 92A/B operation to allow for future use and system expansion.

2. All devices shall be UL 864 and UUKL listed.

1.6 SUBMITTALS

A. See Section 230500 and General Conditions for additional requirements.

B. Product Data: Provide data for each system component and software module.

C. Shop Drawings.

1. Control damper and control valve schedules, including the size, pressure drop and location for intended use.

2. Terminal unit schedules shall be provided on a floor by floor basis and must include at a minimum but shall not be limited to room numbers, sizes, contract drawing tag id's, capacity values of minimum/maximum along with modes of operation (Occ/Unocc/Purge etc.), calibration values, etc.

3. Provide a Control Systems Network Riser diagram. This shall incorporate the following:

a. The riser shall show on a floor by floor basis the ATC controllers and the communication Tier that the controllers reside on.
b. The communication Tiers should be qualified (Ethernet, RS-485, etc.) along with the cabling type.
c. All Tier 1 devices along with 3rd party interfaces and gateways shall be shown including workstations, servers, controllers, printers, etc.
d. Tier 2 and 3 devices can be grouped by type provided a total quantity of devices is indicated. An example of grouping for Tier 2 and 3 would be for terminal equipment showing VAV's with the quantity separate from Fan Coils with a quantity, etc.
e. All routers, switches, bridge, modems, etc shall be shown.
f. If a separate Network is required to achieve any smoke control or life safety functions to comply with UL-864 requirements the riser shall be segregated accordingly.

4. Provide Electrical load calculations for the entire ATC system as follows.

a. Electrical Load calculation sheets shall be provided as part of this submittal package. Provide on a panel by panel basis grouping the loads by floor providing a total VA load for the floor.

b. This shall also apply to VAV box loading when utilizing step down transformers for 24VAC distribution.
c. The ATC contractor shall review the Electrical power plans for the dedicated ATC circuits and indicate in the initial submittal the panels/controllers that will be on each circuit with the panel and circuit number depicted.
d. The KVA and Electrical Panel/Circuit number will also be shown on the ATC controller Network riser diagrams showing totals for panels and totals for floors.
e. If additional circuits are required, the ATC contractor shall indicate this in the submittal and demonstrate by the load calculations the quantity of additional circuits that are required.
f. The Electrical Load Calculations shall be updated and submitted with the final as-built documents.

5. Electrical panel enclosure layouts and wiring diagrams to numbered terminal blocks shall be provided as part of the submittal documentation for all ATC panels. The layouts shall depict all components and the wiring diagrams must be in ladder logic diagram format.

6. Unique individual control flow diagrams shall be provided for all systems. These shall show all input and output system components in their correct locations and orientations. Typical diagrams are allowed providing the systems are truly identical but the unit numbers for major systems are clearly listed. For terminal units the drawing number for the "typical" must be indicated on the terminal unit schedules. All control diagrams shall be provided with their associated points schedules.

7. List connected data points, including connected control unit and input device.

8. Indicate all system graphics for all controlled systems including all air handling systems, hydronic pumping systems, monitored systems, data (connected and calculated) point addresses and operator notations.

9. Show system configuration with peripheral devices, batteries, power supplies, diagrams, modems and interconnections.

10. The sequence of operation for each HVAC system and the associated control diagrams shall be provided. The sequence should include normal operation along with failure modes of operation detailing any software lockouts that require user intervention and any time delays or specialty interfaces. All equipment and control labels shall correspond to those shown on the contract documents.

11. Develop and provide emergency, fire, smoke management control and device response matrices in an MS Excel spreadsheet format.

12. Show electronic ranges for each valve, damper, inlet vanes actuators etc., (i.e. 4 – 20 ma or 0-10 vdc).

13. All control logic and controllable components shall be depicted and identified within each matrices developed.

14. Furnish PICS and BIBBS for each BACNET compliant device.

15. All UUKL components shall be depicted and identified.

D. Manufacturer's Installation Instructions: Indicate manufacturer's installation instructions for all manufactured components.

E. Submit brochures that contain only that information which is relative to the particular equipment or materials to be furnished. Do not submit catalogs that describe several different items other than those items to be used unless irrelevant information is marked out and relevant material is clearly marked.

F. Specifications Compliance Statement

1. The manufacturer shall submit a point by point statement of compliance with the specifications.

2. The statement of compliance shall consist of a list of all paragraphs (line by line).

3. Where the proposed system complies fully, such shall be indicated by placing the word "comply: opposite the paragraph number.

4. Where the proposed system does not comply, or accomplishes the stated function in a manner different from that described, a full description of the deviation shall be provided.

5. Where a full description of a deviation is not provided, it shall be assumed that the proposed system does not comply with the paragraph in question.

6. Submissions which do not include a point by point statement of compliance as specified shall be disqualified.

G. Project Record Documents: Record actual locations of control components, including control units, thermostats and sensors, trunk cable routing, junction boxes, transformers, VAV terminal box power circuiting, box addresses.

1. Revise shop drawings to reflect actual installation and operating sequences.

2. Include submittal data in final "Record Documents" form.

3. All start-up/checkout documentation shall be initialed and signed by the on-site control technician with intimate knowledge of the project.

4. Provide start-up/checkout documentations for all DDC controllers connected to the BAS network. Documentation shall include all controller points used and unused (spare). Furthermore, all final settings, calibration, coefficient values, K factors, spanning, actual spring ranges, etc., shall be indicated for all active points in use.

5. Revise all control sequences of operation. Sequences of operation that restate the Design Engineer's sequences will not be acceptable. Complete details will be given within the sequences of operation provided by the Contractor. Details shall include, but not be limited to, the following items: Control strategy, timers, delays, logic sequencing, start/stop, end devices involved, sensors involved, set points, globally commanded values, shared data between panels and controllers.

6. Provide a separate drawing with detailed operation sequence for each UL category UUKL smoke control system. This means if there are four pressurized stairs each has its own drawing and sequence specific to that system. No system shall be a duplicate.

7. VAV controller startup/commissioning documentation shall include as a minimum but not limited to the following final as-built information:

   a. Min/max CFM settings.
   b. Controller volume tracking differential.
   c. Box size and area multiplier.
   d. Box K factor as determined by ATC and TAB.
   e. Controller network master address.
   f. Controller address on master.
   g. Auto-zero enabled/disabled.
   h. Auto-zero scheduled time.
   i. Communications priority (life safety, critical, normal).
   j. Tstat set point override range (+/- 5°F).
   k. Rom set point (base).
   l. Generic additional points added to controller.
   m. Controller box identifier shall match mechanical tag as called out on mechanical plans.
   n. When used for smoke control unit shall be UL category UUKL.

H. Operations and Maintenance Data:

1. Include interconnection wiring diagrams for completed field installed systems with identified and numbered system components and devices.

2. Include keyboard illustrations and step-by-step procedures indexed for each operator function.

3. Include inspection period, cleaning methods, cleaning materials recommended and calibration tolerances.

1.7 QUALITY ASSURANCE

A. Perform work in accordance with NFPA 70 and Divisions 26, 27 and 28 specifications.

B. Design system software under direct supervision of a Professional Engineer experienced in design of this Work and licensed within the State in which the project is located.

C. Manufacturer Qualifications: Company specializing in manufacturing the Products specified in this section with minimum ten (10) years of documented experience.

D. Installer Qualifications: Company specializing in performing the type of work specified in this section with minimum ten (10) years of documented experience and approved by manufacturer.

E. Products Requiring Electrical Connection: Listed and classified by Underwriters Laboratories Inc. and testing firm acceptable to the authority having jurisdiction as suitable for the purpose specified and indicated.

1.8 WARRANTY

A. See Section 230500 and General Conditions for additional requirements.

B. The system specified herein and shown on the drawings shall be guaranteed to be free from original defects in both material and workmanship for a period of twelve (12) months of normal use and service, excepting damages from other causes. This guarantee shall become effective starting the date the Contract work is accepted as complete by the Owner and in accordance with the General Provisions/Conditions.

C. Provide five (5) year manufacturer's warranty for field programmable micro-processor based units.

D. Submit manufacturer's warranty and ensure forms have been filled out in Owner's name and registered with manufacturer.

1.9 MAINTENANCE SERVICE

A. Provide service and maintenance of energy management and control systems for one (1) year from Date of Substantial Completion/Acceptance of System by Owner.

B. Provide two (2) complete inspections during the first year, one (1) in each season, to inspect, calibrate and adjust controls as required and submit written reports.

1.10 PROTECTION OF SOFTWARE RIGHTS

A. Prior to delivery of software, the Owner and the party providing the software shall enter into a software license agreement with provisions for the following:

1. Limiting use of software to equipment provided under these specifications.
2. Limiting copying.
3. Preserving confidentiality.
4. Prohibiting transfer to a third party.

1.11 GENERAL

A. Acceptable manufactures subject to compliance with the specifications

1. Schneider SmartStruxure

2. Andover

B. The entire system and all control components shall be powered with emergency power.

C. All electrical work shall comply with Divisions 26, 27 and 28 Specifications.

PART 2 - PRODUCTS

2.1 ELECTRIC LOW VOLTAGE WIRING

A. Furnish all labor and material to install the necessary wiring to accomplish the successful and complete operation of the new automatic system (DDC).

B. All electric wiring, wiring connections and all interlocking required for the installation of the temperature control system, as herein specified, shall be provided by the Contractor, unless specifically shown on the Electrical drawings or called for in the Electrical specifications.

C. Furnish all labor and material to install necessary relays, general purpose enclosures and appurtenances to control designated devices relative to the DDC.

D. All wiring throughout shall be concealed where possible.

E. All conduit used shall be EMT, 3/4" minimum size or larger. Conduit sizes shall be large enough to permit the individual conductors to be readily installed or withdrawn without damage to the conductors or their insulation. Splicing of wires will be permitted only in junction boxes or pull boxes. Conduit shall be rigid up to 8’-0″ AFF in mechanical rooms.

F. Conduit shall never to be relied upon for a fault current and safety ground return conductor.

G. All UL category UUKL portions of the system shall be in conduit.

H. All UL category UUKL portions of the system shall be powered from emergency power.

I. The ground system shall not be used as a current carrying conductor except for faults and noise suppression. The grounding system shall be used to control noise and transients which might affect the operation of the automation system. As such, the ground requirements shall be in excess of a grounding system used solely for physical protection minimum (Code requirement).

J. In all cases, the bond to ground shall be as short as possible. A ground point shall be derated by one (1) point (in order of preference) for each 50’-0″ of conductor run between it and the automation equipment to be grounded. Therefore, a water pipe bond located 10’-0″ away will be preferable to a structural steel bond located 150’-0″ away.

K. Set screw connectors shall be galvanized or plated steel. White metal cast type will not be permitted.

L. Flexible conduit shall be used at field devices, i.e., pressure switches, flow switches, temperature devices, etc. Convolutions shall be steel, interlocked continuously. Aluminum will not be permitted. "Liquidtight" shall be used in wet locations. Flexible connector shall be a minimum of 18" long.

M. Only core drilling is permitted to pierce the floors in the electrical closets and elsewhere. The use of water for drilling shall be controlled by a suitable vacuum system, using proper dams to prevent damage to floors below. The ATC Contractor shall be responsible for providing a suitable sleeve in all core drilled holes as specified herein.

N. All wiring shall be run in EMT as noted below:

1.	Sensor to Panel (Block Wall):	In Wall Conduit (EMT)
2.	Sensor to Panel (Stud Wall):	In New Conduit (EMT)
3.	Sensor to Panel (Mechanical Room):	In New Conduit (EMT)
4.	Panel to Front End Workstation:	In New Conduit (EMT)
5.	Front End:	In New Conduit (EMT)

O. Wiring

1. Type THHN solid #18 AWG for control wiring in dry location up to 194°F.

2. Type THWN in wet location up to 167°F (solid #18 AWG).

3. Twisted shielded pair (18 gauge), with PVC cover, Belden #8760 or approved equal.

4. Conduit is not considered as a shield.

5. All wiring associated with the control signals to the smoke damper control/sequence must be in approved conduit.

6. All signal wiring to all field devices shall be run with no splices, separately from any wiring having voltage greater than 30 volts.

P. The Contractor shall install all shielded cable and ground systems in accordance with Division 23. The installation of ground loops shall not affect any sensing or control circuits.

Q. All devices and equipment shall be mounted in minimum NEMA 1 enclosures.

R. In addition to the requirements specified above, all communication wiring cables shall include a minimum of (1) individually 100% shielded pair ([2] conductors) as unused spare conductors. Where the number of conductors and specific cable specified above for each type of communication wiring will not meet this requirement for spare conductors, Contractor shall provide approved equivalent product of Belden or other

manufacturer with the necessary number of conductors and which meets the requirements specified above.

S. Low Voltage Control Wiring (30 VAC or Less)

1. Low voltage control wiring shall be minimum 16 gauge, or heavier if required, twisted pair, 100% shielded with PVC cover Belden #9316 or approved equivalent product of other manufacturers run in conduit with no splices, separate from any wiring above 30 volts.

T. Coordination of Interfacing/Interlocking

1. The Contractor shall be responsible for coordinating all required interface/interlocking software, software logic, sequencing and wiring necessary to provide a fully automated and fully functional operable system to meet or exceed the intent of the Design Engineer's Sequence of Operation. Coordination may include but not limited to the following at no additional cost to the Owner. Variable frequency drive (VFD) interlocking and wiring logic including software, relays factory/field installed wiring and/or VFD drive modifications. This would include coordination of miscellaneous points as specified under the point list in this specification. Systems to include all points, analog, digital, pneumatic sensors wiring, software, wiring, communications gateways, etc., to connect and communicate to any Fire, Plumbing, HVAC, Lighting, ATC, Security, World Wide Web (Internet) systems installed under this project.

2.2 BUILDING AUTOMATION SYSTEM ARCHITECTURE

A. General

1. The Building Automation System shall consist of a number of Nodes and associated equipment connected by industry standard network practices. All communication between Nodes shall be by digital means only. The BAS shall provide control, alarm detection, scheduling, reporting and information management for the entire facility, and Wide Area Network (WAN) if applicable, from a single ODBC-compliant database.

2. The system shall be designed with a top-level 10/100bT Ethernet network, using the BACnet/IP protocol. A sub-network using the BACnet MS/TP protocol, with a minimum of 76.8kb speed, shall connect the local, stand-alone controllers with Ethernet-level controller/routers. The use of ARCNET, LONworks, RS-232 serial communications, or BACnet Ethernet for these controllers is prohibited.

3. The Building Automation System network shall at minimum comprise of the following:

a. Operator Workstations – fixed and portable.

b. Network processing, data storage and communication equipment including file servers.

c. Routers, bridges, switches, hubs, modems and the like communications equipment.

d. Active processing Nodes including field panels.

e. Intelligent and addressable elements and end devices.

f. Third-party equipment interfaces.

g. Other components required for a complete and working Building Automation System.

4. The Building Automation System shall be accessible via Enterprise Intranet and Internet browser with security protection for user access.

5. The PC Workstations, File servers and principal network equipment shall be standard products of recognized major manufacturers available through normal PC vendor channels. "Clones" are not acceptable.

6. Provide licenses for all software residing in the Building Automation System and transfer these licenses to the Owner prior to completion.

B. Network

1. The Building Automation System shall incorporate a primary Tier 1 and Tier 2 networks. At the Contractor's option, the Building Automation System may also incorporate integrated tertiary Tier 3 networks.

a. The Tier 1 portion of the Network shall comprise the Operator Workstations, Network File Servers, Network Application Nodes (NAN), Network Application Controllers (NAC), Web Servers and IP based Integration Controllers. This shall be the main backbone of the system which shall be an Ethernet 10/100bT LAN/WAN, using BACnet/IP as the communications protocol.

b. The Tier 2 portion of the Network shall comprise the various Unitary Application Controllers (UAC). These shall communicate via BACnet MS/TP field buses managed by the NAN/NAC's. Minimum speed shall be 76.8kbps. The Level 2 field bus consists of an RS485, token passing bus.

2. The Building Automation System Network shall utilize an open architecture capable of:

a. Utilizing standard Ethernet communications of 10/100 Mb/sec with a minimum speed of 100 Mb/sec. This shall be the Tier 1 level of the Network.

b. Connecting via BACnet.

3. The Building Automation System network shall support both copper and optical fiber communication media. As a minimum provide CAT 6 cabling within the building for Tier 1 communication. For any connections between buildings, fiber optic cabling shall be utilized.

C. Third-Party Interfaces

1. Building Automation System Contractor shall integrate real-time data from systems supplied by other trades as required.

2. The Building Automation System shall include necessary Building Automation System hardware equipment and software to allow data communications between the Building Automation System and systems supplied by other trades.

3. The trade contractor supplying other systems will provide their necessary hardware and software and will cooperate fully with the Building Automation System Contractor in a timely manner at their cost to ensure the complete data integration.

4. The Building Automation System Contractor shall provide all necessary coordination with vendors, contractors, owners, engineers, and other representatives at no additional cost to the Owner. Provide a completed fully functional, operational, integrated and seamless communicating infrastructure system.

D. Power Fail / Auto Restart

1. Provide for the automatic, orderly and predefined shutdown of parts or all of the Building Automation System following total loss of power to parts or all of the Building Automation System.

2. Provide for the automatic, orderly and predefined startup of parts or all of the Building Automation System following total loss of power to those parts or all of the Building Automation System. Archive and annunciate time and details of restoration.

3. Provide for the orderly and predefined scheduling of controlled return to normal, automatically time scheduled, operation of controlled equipment as a result of the auto restart processes.

4. Maintain the Building Automation System real-time clock operation during periods of power outage for a minimum of 72 hours.

E. Downloading and Uploading

1. Provide the capability to generate Building Automation System software-based sequences, database items and associated operational definition information and user-required revisions to same on designated Operator Workstations and the means to download same to the associated Application Nodes.

2. Provide the capability to upload Building Automation System operating software information, database items, sequences and alarms to the designated Operator Workstations with automatic archiving of same on the Operator Workstations. The functions of this Part shall be governed by the codes, approvals and regulations applying to each individual Building Automation System application.

3. The entire control system shall be approved and listed by UL 916 - Energy Management.

4. All DDC panels shall be powered through uninterruptible power sources (UPS) with sufficient capacity to ride through a (2) minute power interruption between transfers from normal to emergency power. UPS's and wiring shall be provided by the ATC Contractor.

5. Uploading or downloading functions performed at any location shall not affect controllers, communications, inputs, outputs at any location or address within the Building Automation Control Architecture nor shall any controller level functions be disrupted in any manner.

F. Network Automation Nodes (NAN)

1. (NAN) Network Automation Nodes shall be stand-alone, multi-tasking, multi-user, real-time digital processor complete with all hardware, software, and communications interfaces, power supplies. The Controls System shall be designed and implemented entirely for use and operation on the Internet. NANs shall have access to data within the industry standard IT network to the Data Server and other NANs as needed to accomplish required global control strategies. The Network Automation Nodes shall be designed, packaged, installed, programmed and commissioned in consideration of their specific service and prevailing operating conditions. They shall be proven standard product of their original manufacturer and not a custom product for this Project.

2. A failure at a Network Automation Node shall not cause failures or non-normal operation at any other system Network Automation Node other than the possible loss of active real-time information from the failed Network Automation Node.

3. Ancillary Network Automation Node equipment, including interfaces and power supplies, shall not be operated at more than 80% of their rated service capacity.

4. NANs shall provide both standalone and networked direct digital control of mechanical and electrical building system controllers as required by the Specifications. The primary NAN shall support a minimum of [5,000] field points together with all associated features, sequences, schedules, applications required for a fully functional distributed processing operation.

5. NANs shall monitor and report communication status to the Controls Systems Application. The Controls Systems shall provide a system advisory upon communication failure and restoration.

6. All NANs on the network shall be equipped with all software functionality necessary to operate the complete user interface, including graphics, via a Browser connected to the Node on the network or directly via a local port on the NAN.

7. All NAN shall be provided with face mounted LED type annunciation to continually display its operational mode, power and communications.

8. The controllers shall reside on the BACnet Ethernet (ISO 8802-3) local area network and provide Read (Initiate) and Write (Execute) services as defined in Clauses 15.5 and 15.8, respectively of ASHRAE Standard 135, to communicate BACnet objects. Objects supported shall include: Analog input, analog output, analog value, binary input, binary output, binary value, and device. The NAN's shall be tested and certified by the BACnet Testing Laboratory (BTL) as Building Controllers (B-BC).

9. Each NAN shall be provided with the necessary un-interruptible power facilities to ensure its continued normal operation during periods of line power outages of, at minimum, 1-minute duration. Normal functionality shall include all normal software processing, communication with powered field devices and network communications with other powered Controls Systems NAN, Data Servers and OWS. Each NAN shall report its communication status to the Application. The Application shall provide a system advisory upon communication failure and restoration. Each NAN shall retain program, control algorithms, and setpoint information in non-volatile memory in the event of a power failure, and shall return to normal operation upon restoration of power.

10. Each NAN shall have sufficient memory to support its operating system, database, and program requirements, including the following:

    a. Data sharing.
    b. Device and network management.
    c. Alarm and event management.
    d. Scheduling.
    e. Energy Management.

11. Each NAN shall support firmware upgrades without the need to replace hardware and shall have a minimum of 15 percent spare capacity of secondary system controllers, point capacity and programming functions.

12. Each NAN shall continuously perform self-diagnostics, communication diagnosis, and provide both local and remote annunciation of any detected component failures, low battery condition; and upon failure shall assume the predetermined failure mode.

13. Each NAN shall monitor the status of all overrides and inform the operator that automatic control has inhibited, and allow the operator to manually override automatic or centrally executed command.

14. Provide the capability to generate and modify the Controls Systems Application software-based sequences, database elements, associated operational definition information and user-required revisions to same at any designated Workstation together with the means to download same to the associated System Controllers.

15. In the event of loss of normal power, there shall be orderly shutdown of the controllers to prevent the loss of database or software programming. When power is restored flash memory, battery backup or super capacitor will be automatically loaded into non-volatile flash memory and shall be incorporated for all programming data.

G. Network Application Controller (NAC)

1. The Network Application Controller (NAC) shall provide the same abilities of the NAN to reside on the Ethernet along with Web based interface. The main differences will be in a lower controller count for the Tier 2 network but this controller shall have direct hardwired input/output capabilities. The NAC's shall be tested and certified by the BACnet Testing Laboratory (BTL) as Building Controllers (B-BC).

   a. Each NAC shall have a minimum of 24 hardwired input/output points.

   b. Each NAC shall have an integral Input/Output communication bus for point expansion. The input/output expansion modules shall be for point IO only and all control processing algorithms shall reside in the NAC.

   c. The NAC's shall be utilized for large systems control and the contractor shall provide an NAC for each of the following systems:

      1) Air Handling Unit

      2) Chiller Plant (based on the size of the plant, more than a single controller may be required for redundant operation).

      3) Boiler plant (based on the size of the plant, more than a single controller may be required for redundant operation).

      4) Heat Exchanger Systems for Processed Chilled Water, Reheat/Radiation/Radiant Hot Water, etc.

H. Unitary Application Controller (UAC)

1. Unitary Application Controller (UAC) shall provide both standalone and networked direct digital control of HVAC systems. The UAC's shall be tested and certified by the BACnet Testing Laboratory (BTL) as Advanced Application Controllers (B-AAC).
2. A dedicated UAC shall be configured and provided for each terminal HVAC system (VAV Box, Unit Heater, Fan Coil Unit, CV Box)

3. Each UAC shall be able to retain program, control algorithms, setpoints, logic and command information through the use of non-volatile memory (flash, EEPROM). Other information such as trend data, historical data schedules will be maintained for at least 72 hours in the failure and shall return to normal operation upon restoration of power.

4. Each UAC shall report its communication status to the Building Automation System. The Building Automation System shall provide a system advisory upon communication failure and restoration.

5. Each UAC shall support firmware upgrades without the need to replace hardware and shall have a minimum of 15 percent spare capacity of I/O functions. The type of spares shall be in the same proportion as the implemented functions on the controller, but in no case there shall be less than one point of each implemented I/O type.

6. Provide a means to prevent unauthorized personnel form accessing setpoint adjustments and equipment control functions.

7. The UAC shall provide the ability to download and upload configuration data, both locally at the Node and via the FMS communications network.

8. Each UAC shall be a dedicated controller without the need to use expansion modules to accomplish the entire primary control sequences. Sharing controller, sensor, input/output data over any high level or low level network to accomplish the specified control sequences is unacceptable. Global sharing of general data such as OA-T, OA-RH OA-CO^2 levels between controllers over the BMS network is acceptable as long as speed of transmitting the data does not impact the UAC controller ability to perform in any mode of operation.

9. If it is determined that the UAC controller cannot perform specified sequence of operation because of dependency for shared information that Contractor shall provide a higher level controller at no additional cost. This change shall be identified by separate submittal to Design Engineers.

2.3 PORTABLE OPERATOR'S TERMINAL

A. Acceptable Manufacturers subject to compliance with the specification:

1. Dell
2. Compaq
3. Toshiba
4. IBM

B. Provide one (1) portable operator terminal with a minimum LCD display of 80 characters by 25 lines and a full featured keyboard. The portable operator’s terminal shall be hand-held and plug directly into individual distribution control panels as described below. Provide a user friendly, English language prompted interface for quick access to system information, not codes requiring look-up charts.

C. General

1. Furnish portable operator's terminal for system. Portable operator's terminal shall allow for local accessing of program information.

2. Laptop terminal portable operator's terminal shall have the following features:

   a. Intel Pentium Core 2 Duo 2.53 GHz w/3 MB cache
   b. Full active matrix color display with minimum 1024 x 680 resolution, 15".
   c. AC adapter
   d. Battery pack / battery charger
   e. 250 GB fixed disk drive
   f. 3.0 GB of RAM
   g. 8X DVD +/- RW drive
   h. Internal modem
   i. Audio built in
   j. Latest version of Microsoft Windows
   k. Internal Ethernet Adapter Card with UTP/BNC connector
   l. Equipped with both 1 Type III or 2 Type II PCMCIA Slots

      1) Type III 4
      2) Type II PCMC1A Slots

   m. Integrated pointing device

D. Functionality of the portable operator's terminal connected at any high or lower level controller:

1. Access all controllers on the network.

2. Backup and/or restore controller data bases for all system panels, not just the DDC controller.

3. Display all point, selected point and alarm point summaries.

4. Display trending, historical and totalization information.

5. Add, modify, and/or delete any existing or new system point.

6. Command, change setpoint, enable/disable any system point vertical or physical.

7. Program and load custom control sequences as well as standard energy management programs.

E. Connection of a POT on controller to a distributed control processor shall not interrupt nor interfere with normal network operation in any way, prevent alarms from being transmitted or preclude centrally-initiated commands and system modification.

F. Portable operator terminal access to controller shall be password-controlled and menu-driven.

2.4 OPERATOR INTERFACE WORKSTATION (TYPICAL FOR [1])

A. The Contractor shall provide all the necessary hardware and software to interface with the existing Central Facility Management System. A gateway between each system provided under this section and the CFMS system shall be provided by the ATC Contractor. The gateway shall allow the following:

1. Monitoring and commanding of all points of each system. Limited point sharing between the OCC and native systems is not acceptable except when using bundled point technology to control terminal equipment (e.g. VAV box, RHC). The bundle point information may be passed to the CFMS via a virtual terminal direct connection. This connection shall be over the Ethernet data highway and shown on the CFMS PC as an inset window on the screen. Each bundled point shall be unbundled to continuously pass the actual value of the controlled variable (e.g. room temperature, face velocity) and the controlled variable setpoint. If a virtual terminal connection is not possible, the ATC Contractor shall pass the bundled point through the gateway and Comdale shall unbundle the information for display. Bundled points shall not be allowed for primary HVAC equipment (e.g. AHUs, EAHUs, heat exchangers).

2. Trend reports shall be compiled by the CFMS; however, point information and format shall be provided to the CFMS from the native system as directed.

3. The CAD drawings for the native system shall be capable of being located into the CFMS for the purpose of making dynamic graphics.

B. Transmission of the native system to the CFMS shall be via Ethernet. All necessary labor and material to tie into the existing campus Ethernet data highway shall be provided under this section.

C. Each native system shall have a CFMS gateway unless otherwise provided for in the specification.

D. The cost to develop the gateway shall be provided under this section. The labor to check out and verify each developed gateway shall be included under this section. The gateway operation must be verified in the presence of and signed-off by the Owner's CFMS representative.

E. The cost to create graphics, check out, program and any other work necessary to provide a fully functioning CFMS interface with the new Building Automation System control systems shall be included under this section.

F. The ATC Contractor shall develop all software interfaces for the Vivarium/Animal Facility Monitoring and Control system, to provide a simple computer interface and operating systems for use by the Animal Research Staff in monitoring and resetting temperature, humidity, lighting control, etc. within the animal research spaces.

G. Provided with a UPS system with one hour backup.

2.5 OPERATOR WORKSTATION

A. Basic Interface Description

1. Command Entry/Menu Selection Process: Operator Workstation interface software shall minimize operator training through the use of English language prompting, English language point identification, and industry standard PC application software. The operator interface shall minimize the use of a typewriter style keyboard through the use of a mouse or similar pointing device, and "point and click" approach to menu selection. Users shall be able to start and stop equipment or change setpoints from graphical displays through the use of a mouse or similar pointing device.

2. Graphical and Text-Based Displays: At the option of the user, Operator Workstations shall provide consistent graphical or text-based displays of all system point and application data described in this specification. Point identification, engineering units, status indication, and application naming conventions shall be the same at all workstations.

B. Computer System Access Operation Control Stations (OCS) Description: This system access workstation is also referred to as the Building Automation System “Front end”.

C. Provided Workstation with:

1. Workstation shall be general purpose, commercially available, personal computer with sufficient memory and processor capacity to perform all functions described in this specification.

2. Sufficient hard drive memory storage shall be provided to accommodate all fully configured point data bases, all application databases, all graphics data bases, all user-defined reports, and all historical data archival as described in this specification.

3. Each shall include the following:

   a. Intel Core 2 Duo 3.0 GHz, 6 MB cache with 4 GB DDR2 SDRAM memory.
   b. 19" color LCD monitor 1280x1024.
   c. SVGA video output (256 MB RAM).
   d. 750 GB fixed disk.
   e. HI-RES bus mouse.
   f. (1) Printer for alarms, minimum 240 characters/seconds.
   g. (1) Printer for reports, minimum Laser printer similar to HP 4000.
   h. 16X DVD +/- RW drive
   i. Telephone modem (56K)
   j. Ethernet network interface card
   k. Server type platform shall have at a minimum a RAID level 1 array with multiple fixed hot swappable disks for redundancy. Provide minimum two fixed disks.

4. The operator functions provided by the system access Operator Terminal shall include, but not be limited to, the following:

a. Start and Stop Points
b. Modify Setpoints
c. Modify PID Loop Setpoints
d. Override PID Control
e. Change Time/Date
f. Add/Modify Start/Stop Weekly Scheduling
g. Add/Modify Setpoint Weekly Scheduling
h. Enter Temporary Override Schedules
i. Define Holiday Schedules
j. View Analog Limits
k. Enter/Modify Analog Warning Limits
l. Enter/Modify Analog Alarm Limits
m. Enter/Modify Analog Differentials
n. View Point History Files

5. UPS system with one hour backup.

6. The workstation shall provide access to all real or calculated points in the controller to which it is connected, or any other controller in the network. This capability shall not be restricted to a subset of predefined "global points", but shall provide totally open exchange of data between the operator terminal and any DDC panel in the network.

7. Provide English language prompting to eliminate the need for the user to remember command formats or point names. Prompting shall be provided consistent with a user's password clearance and the types of points being displayed, to eliminate the possibility of operator error. Operator shall not require the use of special templates for navigation.

8. On-line, interactive user's "Help" manuals and tutorials shall be provided. Based upon operator request, the "help" function shall provide general system operating instructions, and specific descriptions of commands available in the currently displayed menus.

9. Identification for all real or calculated points shall be consistent for all network devices.

10. In addition to instantaneous summaries, the Operator's Terminal shall allow a user to view a Point History file for system points. Point History files shall provide a record of value of analog points over the last 24 hours, at 30 minute intervals, or a record of the last (10) status changes for binary type points.

D. Provide Server with:

1. PC Hardware – The Workstation/Server computer shall be configured as follows:

a. Memory – 4 GB
b. CPU– Intel® Xeon®, 2.8 GHz, 8M Cache,
c. Hard Drive – 500 GB each for RAID level 1 array
d. Hard drive backup system –DVD +/- RW

e. Ports – (1) Serial, (2) USB ports
f. Keyboard – 101 Keyboard and 2 Button Mouse
g. CRT configuration

1) 17” LCD Flat Panel Monitor 1280 x 1024 resolution minimum
2) 16 bit or higher color resolution

h. LAN communications – Ethernet communications board; 100Mbps Min

2. Operating System Software

a. Windows XP Professional, IIS Version 5.1, .Net Version 2.0, SQL server 2005 Express software with SP2 or <Alternately> Microsoft Windows Server 2003 OS with SP2, IIS Version 6.0, .Net version 2.0 and SQL Server 2005 with SP@

b. Provide required software and hardware required for for integration of computing hardware on enterprise IT network.

E. Dynamic Color Graphic Displays: Color graphics shall be provided as specified in the Execution portion of this specification to optimize system performance analysis and speed alarm recognition.

1. System Selection/Penetration: The operator interface shall allow users to access the various system schematics and floor plans via a graphical penetration drill down scheme, menu selection, and text-based commands.

2. Dynamic Data Displays: Dynamic temperature values, humidity values, flow values, and status indication shall be shown in their actual respective locations, and shall automatically update to represent current conditions without operator intervention.

3. Windowing: The windowing environment of the workstation shall allow the user to simultaneously view several graphics at the same time to analyze total building operation, or to allow the display of a graphic associated with an alarm to be viewed without interrupting work in progress.

4. Graphics Definition Package: Graphic generation software shall be provided to allow the user to add, modify, or delete system graphic displays.

a. The Contractor shall provide libraries of pre-engineered screens and symbols depicting standard air handling unit components (e.g. fans, cooling coils, filters, dampers, etc.), complete mechanical systems (e.g. constant volume-terminal reheat, VAV, etc.) and electrical symbols.

b. The graphic development package shall use a mouse or similar pointing device in conjunction with a drawing program to allow the user to perform the following:

1) Define symbols

2) Position and size symbols
3) Define background screens
4) Define connecting lines and curves
5) Locate, orient and size descriptive text
6) Define and display colors for all elements
7) Establish correlation between symbols or text and associated system points or other displays.

c. Graphical displays can be created to represent any logical grouping of system points or calculated data based upon building function, mechanical system, building layout, or any other logical grouping of points which aids the operator in the analysis of the facility. To accomplish this, the user shall be able to build graphic displays that include point data from multiple DDC panels, including application specific controllers used for DDC unitary or VAV terminal unit control.

5. Graphic

a. Provide graphic screens each system for this project.

b. Provide the following as a minimum:

1) Each air handling unit and exhaust air handling unit.
2) Chilled water system.
3) Condenser water system.
4) Process chilled water system.
5) Steam system.
6) Hot water system.
7) Each heat exchanger.
8) Each chiller.
9) Each hot water system.
10) Each glycol system.
11) Each exhaust fan.
12) Each lab pressure control system.
13) Each animal holding, procedure and operating room in the Vivarium.
14) Process condenser water system.
15) Each piece of equipment.
16) Each controlled system.

c. Provide graphic representation of building's form and site plans locating all equipment and panels.

d. Each hardware point shall be represented on graphic screen.

e. Selected software points shall be represented on respective process system graph as determined by the Owner. Examples of these software points are:

1) Control loop setpoint value.
2) Control loop auto/manual selection.

3) Lead/lag selection for pumps and other motors.
4) Campus chilled water global points.
5) Calculated points such as run time.
6) Other vertical software points as required.

f. The Contractor shall coordinate all required graphical modes, features, binding, logic, etc., for a complete fully functional graphical operating system. All graphical schemes shall be submitted and approved by Architect/Engineer and Owner prior to programming.

F. Database Configuration

1. Provide database configuration for each hardware and software point.

2. Specific point parameters, such as alarm limits, alarm message, point name and point description shall be as approved by the Owner.

G. Trends

1. Provide real time and historical trends for hardware and software points as directed by the Owner.

2. Archiving or transfer of trend and historical data information shall not interfere, reduce communication throughout stow network speed or reduce local controller operation by any measure, due to trend or historical data capture rates and storage routines.

H. Internet / Intranet Browser

1. A multi-user color graphics and textual interface shall be provided that allows customers to access their Building Automation System data via the Internet or Intranet. This interface shall use HTML-based pages to send and receive data from a Building Automation System to a web browser.

2. Browser shall:

a. Automatically reflect any changes made to the Building Automation System without additional programming.

b. When installed behind a corporate firewall, shall work in conjunction with other security measures that have been implemented.

c. Allow the user to navigate and command the Building Automation System using the same format as the Operator Workstation.

d. Be an industry-standard browser

e. Provide user password access control.

f. Provide the means by which the user can create, edit and view groups of FMS data points.

g. Provide navigation tools for moving between the views. In addition, it shall provide tools for gaining access to help and for logging out of the system.

I. Paging

1. Provide the means of automatic alphanumeric paging of personnel for user-defined Building Automation System events.

a. System shall support both numeric and alpha-numeric pagers, using Alphanumeric, PET, or IXO Protocol at the owner's option.

b. Users shall have the ability to modify the phone number or message to be displayed on the pager through the system software.

c. System shall utilize pager schedules to send pages to the personnel that are "on-call".

d. Contractor shall be responsible for providing a modem for connection to the paging service.

J. Reports

1. Provide real time reports for hardware and software points as directed by the Owner.

2. The ATC Contractor shall program and test all alarming and alarm report routing to final devices such as printer, computers, pagers, monitors, cell phones, www, etc. Alarming requirements and routing shall be coordinated with the Owner by first compiling and all points listing for Owner's review prior to any programming.

K. Network Speed and Transmission

1. Network speed (communication rate) 100 megabits per second (MBPS) minimum for all level one controllers.

2. Network configurations shall be Star, Bus or mixed (Star and Bus).

2.6 DIAL-UP COMMUNICATIONS

A. Auto-dial/auto-answer communications shall be provided to allow stand-alone DDC panels to communicate with remote operator stations on an intermittent basis via telephone lines.

1. Dial-Up Stand-Alone DDC Panels: Auto-dial panels shall automatically place calls to workstations to report critical alarms, or to upload trend and historical information for archiving.

    a. Stand-alone DDC panels shall analyze and prioritize all alarms to minimize the initiation of calls. Non-critical alarms shall be buffered in memory and reported as a group of alarms, or until an operator manually requests an upload of all alarms.

    b. The auto-dial shall include provisions for handling busy signals, "no answers", and incomplete data transfers. Default devices shall be called when communications cannot be established with primary devices.

2. Dial-Up Workstations: Operators at dial-up workstations shall be able to perform all control functions, all report functions, and all database generation and modification functions as described for workstations connected via the local area network. Routines shall be provided to automatically answer calls, and either file or display information sent from remote DDC panels, The fact that communications is taking place with remote control systems over telephone lines shall be completely transparent to an operator.

    a. An operator shall be able to access remote buildings by selection of any facility by its logical name. The PC dial-up program shall maintain a user-definable cross-reference of buildings and associated telephone numbers, so the user shall not be required to remember or manually dial telephone numbers.

    b. A PC workstation may serve as an operator device on a local area network, as well as a dial-up workstation for multiple auto-dial DDC panels or networks. Alarm and data file transfers handled via dial-up transactions shall not interfere with local area network activity, nor shall local area network activity keep the workstation from handling incoming calls.

3. Modem Characteristics: Dial-up communications shall make use of Hayes compatible 56K modems and voice grade telephone lines. Each stand-alone DDC panel may have its own modem, or a group of stand-alone DDC panels may share a modem.

2.7 UNINTERRUPTIBLE POWER SUPPLY (UPS)

A. Provide UPS backup for entire ATC system. All controllers, panels, field devices, communication infrastructure, computers, etc. The ATC contractor shall be responsible for sizing the UPS system/system’s that will be required. All additional cabinets required for protection shall be part of this projects scope. Load calculations shall be submitted for review.

B. The battery shall be hot-swappable without disconnecting or disrupting the power to the attached load. The UPS shall be sized for 125% of connected load.

C. The UPS shall be provided with remote monitoring for the battery to allow the user the ability to have an alarm be generated when a battery needs to be changed. The interface and if required additional network for this alarming shall be provided as part of this project by the ATC contractor.

D. The ATC contractor shall include the UPS infrastructure on their Network Riser Diagram and submit for review. The UPS/UPS's shall be shown on the project coordination drawings.

E. Acceptable Manufacturer:

1. APC

2. Sola

PART 3 - EXECUTION

3.1 PROJECT MANAGEMENT

A. The ATC Contractor shall designate a project manager who will be responsible for the following:

1. Construct and maintain project schedule.
2. On-site coordination with all applicable trades and subcontractors.
3. Authorized to accept and execute orders or instructions from Owner/Architect.
4. Attend project meetings as necessary to avoid conflicts and delays.
5. Make necessary field decisions relating to this scope of work.
6. Coordination/Single point of contact.

3.2 NUMBERING/NAMING CONVENTIONS

A. The Contractor shall collaborate with the Owner directly to determine the Owner's preference for naming conventions, etc. before entering the data in the system.

B. As a minimum the ATC Contractor shall submit to the Architect/Engineer and Owner the layout of the network, identifying all DDC controllers. Each controller will be identified by address and system being served. All physical and software generated objects, points and attributes shall be listed along with a description.

3.3 START-UP AND COMMISSIONING

A. When installation of the system is complete, calibrate equipment and verify transmission media operation before the system is placed on-line. All testing, calibrating, adjusting and final field tests shall be completed by the installer. Verify that all systems are operable from local controls in the specified failure mode upon panel failure or loss of power.

B. Provide any recommendation for system modification in writing to Owner. Do not make any system modification, including operating parameters and control settings, without prior approval of Owner.

C. The ATC Contractor will provide industry standard checkout and startup checklists for each DDC controller installed for the project. If not standard is available, the ATC Contractor shall develop a spreadsheet in MS Excel format and submit to the Engineer for approval prior to system checkout.

3.4 INSTRUCTION AND ADJUSTMENT

A. The Contractor shall provide factory-trained instructor to give full instructions to the owner designated personnel in the operation of the system installed. Instructors shall be thoroughly familiar with all aspects of the subject matter they are to teach. The Contractor shall provide all students with a student binder containing product specific training modules for the system installed. All training shall be held during normal working hours of 8:00 AM to 5:00 PM weekdays.

B. Upon completion of the project, the Contractor shall:

1. Fine-tune and "de-bug" all software control loops, routines, programs and sequences of control associated with the control system supplied.

2. Completely adjust and make ready for use, all transmitters, relays, damper operators, valves, etc., provided under this Section. This Contractor shall furnish copies of complete, detailed, calibrating checkout and commissionary documentation for reach controller. Documentation shall list each procedure and shall be signed by the control specialist performing the service.

3. Furnish a complete set of system operation manual, including standard manufacturers' operating manuals, complete as-built installation diagrams, and complete software hardcopy documentation, as well as a magnetic media back-up.

4. Provide an on-site training program for the Owner's staff in the operation and use of the control system. Training shall include two (2) segments, as follows:

a. Segment 1 shall include 16 hours of classroom and hands-on training. This segment shall instruct personnel in the system configuration, component characteristics, control strategy on each controlled system and all requirements for daily operation and use of the system. This segment shall give the Owner's representative a working proficiency in the day-to-day operational requirements (i.e., system monitoring, alarm acknowledgment, HVAC system troubleshooting techniques, setpoint and time schedule adjustments, manual override, etc.).

b. Segment 2 shall include 6 hours of on-site training. This segment will be geared for the Owner's designated prime operator. An emphasis on overall software management and manipulation shall be made, to allow the prime operator(s) to make control strategy and overall facility and system

management changes as required. Attendees shall have attended Segment 1.

c. All training shall take place at the site and at times mutually agreed to between that ATC Contractor and the Owner. The ATC Contractor shall provide to the Owner's designated representative, at least three (3) weeks before each segment, a course syllabus outline and schedule. The ATC Contractor shall provide all training material, reference material and training aids, as required, all as part of his Contract cost.

END OF SECTION 251000

SECTION 25 3523 – DDC CFM TRACKING TERMINAL BOXES (VAV, VCV, CV, VVE, CVE Designations)

PART 1 – GENERAL

1.1 RELATED DOCUMENTS

A. Drawings and general provisions of the Contract, including General and Supplementary Conditions, Section 250500 and other Division 1 Specification Sections, apply to this Section.

B. LEED Building General Requirements: The Owner requires the Contractor to implement practices and procedures to meet the project's environmental performance goals, which include achieving LEED Certification. Specific project goals that may impact this area of work include: Use of recycled-content materials; use of locally-manufactured materials; use of low-emitting materials; construction waste recycling; and the implementation of a construction indoor air quality management plan. The Contractor shall ensure that the requirements related to these goals, as defined in the sections below, are implemented to the fullest extent. Substitutions, or other changes to the work proposed by the Contractor or their Subcontractors, shall not be allowed if such changes compromise the stated LEED Building Performance Criteria.

1. Comply with LEED (Leadership in Energy and Environmental Design) Green Building Rating System BD+C, Version 3.

1.2 WORK INCLUDED

A. Furnish and install temperature controls.

1.3 RELATED SECTIONS

A. Examine all drawings and criteria sheets and all other Sections of the Specifications for requirements which affect work under this Section whether or not such work is specifically mentioned in this Section.

B. Section 017419 "Construction Waste Management and Disposal" for requirements related to construction waste management and disposal at the project site.

C. Section 018113 "VOC Limits for Adhesives, Sealants, Paints and Coatings" for restrictions of VOC in adhesives, sealants, paints and coatings.

D. Section 018119 "Construction Indoor Air Quality (IAQ) Management" for requirements during construction for indoor-air-quality management.

1.4 SUBMITTALS

A. See Section 250500 and General Conditions for additional requirements.

B. Product Data: Provide data for duct materials.

C. Prepare and submit scaled coordination drawings.

D. Manufacturer's Installation Instructions.

PART 2 – PRODUCTS

2.1 DDC CFM TRACKING TERMINAL BOXES (VAV, VCV, CV, VVE, CVE Designations)

A. General

1. For this project, all air terminal boxes shall be purchased/furnished/installed by the HVAC Contractor. Successful terminal box manufacturer shall receive the terminal box controller and actuator from the Automatic Temperature Control Contractor and mount them onto the boxes at the box factory. The Automatic Temperature Control Contractor shall pay for installation of the controllers, actuators, etc. onto the boxes. The HVAC Contractor shall coordinate the shipment of the components, and the Automatic Temperature Control Contractor shall pay for shipment of controllers to the air terminal box manufacturer and provide the controls to the box manufacturer in a coordinated sequence to enhance the construction phase.

2. The following control manufacturers shall be acceptable for CFM tracking air terminal box controls contingent on compliance with the specifications:

   a. Siemens Building Technologies
   b. Johnson Controls
   c. Honeywell
   d. Automated Logic

3. The DDC CFM tracking air terminals shall be totally integrated with the central automation system.

4. The DDC CFM tracking air terminal control manufacturers must certify their company's/product capability and reliability to furnish, install, start-up and maintain their proposed system configuration.

5. The following type of air terminal controllers shall be required:

   a. Variable Air Volume Supply
   b. Constant Volume (with heat coil) Supply
   c. Combination Variable/Constant Volume (with heat coil) Supply
   d. Variable Volume Exhaust
   e. Constant Volume Exhaust
   f. Variable Control Volume Exhaust

6. The Automatic Temperature Control Contractor shall submit to the Architect and Owner for approval, within 60 days of receipt of his Contract, a complete submittal on the proposed airflow control systems, to include, but not be limited

to, system flow schematic wiring and tubing diagram, identifying control, instruments listing the manufacturer, model number, and their performance capabilities.

7. The direct digital controller shall communicate to the DDC terminal front end automation system through a 2-wire, optically isolated interface. This 2-way interface shall allow commands to be sent to the controller, which shall in turn send status information back to the system. Up to 32 controllers may be daisy-chained on one (1) loop.

8. The Automatic Temperature Control Contractor shall provide all necessary factory and/or field labor for complete calibration and adjustment of the airflow control components and shall be responsible for setting all control setpoints, operating sequences and alarming systems contained within the airflow control centers to produce the following overall system performance.

9. In conjunction with the system start-up, the Automatic Temperature Control Contractor shall instruct the Owner's personnel in the proper operation of the airflow control system.

10. The Automatic Temperature Control Contractor shall guarantee the proper operation of the airflow control system and shall calibrate the initial system installation.

11. The Automatic Temperature Control Contractor shall guarantee the proper operation of the system and furnish all required service for one (1) full year from the date of system acceptance.

12. Damper reheat valves are installed by HVAC, actuators installed by ATC, actuators shall be fully modulating electronic, furnished by the Automatic Temperature Control Contractor and installed by the terminal box manufacturer (installation paid for by the Automatic Temperature Control Contractor).

13. The Automatic Temperature Control Contractor shall provide auto-zeroing function with all required software, programming, timers, scheduling and controller hardware to prevent terminal boxes and their controllers from disrupting the integrity of the environment being served. Disruption of airflow, room pressure relationship, temperature and/or humidity levels will be unacceptable.

B. Air Terminal Box Controller

1. The Controller shall be as specified above.

C. Room Temperature Sensor (with Setpoint Control)

1. Room sensors with integral setpoint adjustment shall be provided where shown on the drawings. Controller shall be capable of receiving both adjustments from the sensor and separate EEPROM communications interface. The sensors shall be supplied by the Controller manufacturer. The room temperature sensors shall

be an RTD type room temperature sensor and shall have an RS-232C communication port. A single cable interface from RS232 to a RJ48 jack on the space sensor is acceptable. Room sensors shall have an accuracy of ±2% at 70°F with a tolerance of 0.4°F. The unit shall provide room temperature data to the controller. The communication port shall allow for direct communication to both of the pair of air terminals directly associated with the sensor, via a hand-held laptop computer.

2. Control of each pair of terminal boxes shall be stand-alone (one [1] controller) and shall not depend on control information from any other Air Terminal Box Controller for primary control. Failure of any component, including the individual microprocessor controlling the unit, shall not cause interruption of control on any other VAV box controller. The DDC controller shall have programmable parameters stored in a non-volatile EEPROM. Each controller shall be capable of addressing read only memory for a specific integrated circuit containing all logic analog amplifiers with programmable gain and offset, analog to digital converter for RS-485 communication. No battery backup shall be necessary. Controller shall also have capabilities of random access memory operating at a communication rate of 4800 baud as standard. Software capabilities shall have multiple stand-alone control strategies which shall be programmed at the factory through service tool or lap-top computer, or BAS active strategy initiated through BAS communications or physical device such as pressure switches, duct sensors, etc., as indicated. The control system shall be capable of tracking one exhaust box based upon the combined supply airflows of multiple supply boxes.

3. The following information (minimum) shall be communicated into the front end and the local room sensors:

Room Without Fume Hood		
Item	**Readout (Units)**	**Adjustment**
Room CFM Differential (Actual)	Yes (Volume)	Yes
Room Temperature (Actual)	Yes (°F)	Yes
Supply Volume	Yes (CFM)	Yes
Exhaust Volume	Yes (CFM)	Yes
Temperature Setpoint	Yes (°F)	Yes
Differential Volume Setpoint	Yes (CFM)	Yes

PART 3 – EXECUTION

3.1 INSTALLATION

A. All work shall be installed per manufacturer's instruction and recommendations.

END OF SECTION 253523

SECTION 255000 – INSTRUMENTATION TERMINAL DEVICES

PART 1 – GENERAL

1.1 RELATED DOCUMENTS

A. Drawings and general provisions of the Contract, including General and Supplementary Conditions, Section 250500 and other Division 1 Specification Sections, apply to this Section.

B. LEED Building General Requirements: The Owner requires the Contractor to implement practices and procedures to meet the project's environmental performance goals, which include achieving LEED Certification. Specific project goals that may impact this area of work include: Use of recycled-content materials; use of locally-manufactured materials; use of low-emitting materials; construction waste recycling; and the implementation of a construction indoor air quality management plan. The Contractor shall ensure that the requirements related to these goals, as defined in the sections below, are implemented to the fullest extent. Substitutions, or other changes to the work proposed by the Contractor or their Subcontractors, shall not be allowed if such changes compromise the stated LEED Building Performance Criteria.

1. Comply with LEED (Leadership in Energy and Environmental Design) Green Building Rating System BD+C, Version 3.

1.2 WORK INCLUDED

A. Furnish and install temperature controls.

1.3 RELATED SECTIONS

A. Examine all drawings and criteria sheets and all other Sections of the Specifications for requirements which affect work under this Section whether or not such work is specifically mentioned in this Section.

B. Section 017419 "Construction Waste Management and Disposal" for requirements related to construction waste management and disposal at the project site.

C. Section 018113 "VOC Limits for Adhesives, Sealants, Paints and Coatings" for restrictions of VOC in adhesives, sealants, paints and coatings.

D. Section 018119 "Construction Indoor Air Quality (IAQ) Management" for requirements during construction for indoor-air-quality management.

1.4 SUBMITTALS

A. See Section 250500 and General Conditions for additional requirements.

B. Product Data: Provide data for duct materials.

C. Prepare and submit scaled coordination drawings.

D. Manufacturer's Installation Instructions.

1.5 QUALITY ASSURANCE

A. See Section 250500.

PART 2 – PRODUCTS

2.1 INSTRUMENTATION TERMINAL DEVICES

A. Fan and Pump Status (Under 3 HP)

1. Water/air flow for each pump/fan shall be indicated by means of a differential pressure switch which opens an electrical contact as the differential pressure falls below a preadjusted pressure range setting. Water differential pressure switch shall be the Penn Model P-74 or similar. High pressure differential switch shall be suitable for the flow and pressure of each system.

B. Fan and Pump Status (3 HP and Larger)

1. Verification of all air and water for all fans and pumps shall be by an analog current transformer device. The current transformer output shall be a true analog value. Digital output devices will not be considered acceptable.

2. If the fan or pump is controlled via a VFD, the ATC contractor shall calibrate the current transformer status for belt drive motors by removal of the belt to set the on/off status point.

C. Motor Start/Stop

1. Start/stop relay module shall provide either momentary or maintained switching action as appropriate for the motor being started.

2. All relays shall be plugged in, interchangeable, mounted on a circuit board and wired to numbered terminal strips.

D. Electric/Pneumatic Transducer

1. Electric to pneumatic transducers shall be housed in a control equipment cabinet. Transducers shall be compatible with the output of the digital system controller and the control pressure span of the pneumatic actuator. Transducer accuracy shall be at least ±2% of span and shall incorporate an integral potentiometer for position feedback to the digital system controller.

E. Energy Meter Systems (Steam and Chilled Water)

1. Steam Meter

a. Furnish and install steam and chilled waterflow/totalization meters and compatible transmitter systems where shown and as scheduled on the point list. Meter shall be independent from the utility meters.

b. Furnish and install a vortex shedding insertion flow meter (Series 900 - High Pressure - Retractable) in the main steam distribution pipe as manufactured by EMCo, or approved equal as manufactured by Yokagawa. The meter shall be suitable for installation into 300 psig rated steam system.

c. Furnish and install a stainless steel vortex flow water metering device as manufactured by EMCo or approved equal.

d. Each of the above meters shall be equipped with an FP-100 flow processor as manufactured by EMCo. Each flow processor shall be capable of local display of flow condition plus provide information to the BRBII central automation system. Each processor shall be equipped with a battery to maintain all information for ten (10) days at recordings. RS-232 communication interface hardware shall also be required.

e. The individual outputs of each individual energy meter shall be monitored and totalized by the building automation system CPU. All documentation/information shall be as listed under the software manager package, "Energy".

f. All power and control wiring shall be installed in accordance with manufacturer's wiring diagrams and installed per manufacturer's recommendations.

g. Manufacturer shall provide means and data for on-site testing and verifying of calibration of the primary in-line media flow sensor.

h. The Automatic Temperature Control Contractor shall furnish, mount, wire, and program all devices associated with the "Energy" meters.

i. The flow device connections shall be flanged and installed between two (2) companion flanges as the device and service dictate. There shall be a minimum of six (6) pipe diameters of straight, unobstructed pipe upstream and three (3) pipe diameters of straight pipe downstream of the same pipe diameter as the primary flow sensor. A differential pressure transmitter, temperature transmitter and a pressure transmitter shall be provided and installed as required. The differential transmitter shall include three (3) separate valve manifolds. Temperature transmitter shall be furnished and installed when required with RTD type element and threaded thermowell for installation in the media flow piping downstream from the primary sensor unit. A pressure transmitter shall be furnished and installed when required and shall be installed upstream of the primary flow sensor unit.

j. The individual outputs of each individual energy meter shall be monitored and totalized by the building automation system. The remote mounted

control panel shall also have a digital readout of current use rate, and status and alarm indication. Control panel shall be UL and NEMA rated.

k. All power and control wiring shall be installed in accordance with manufacturer's wiring diagram and installed per manufacturer's recommendations.

l. Manufacturer shall provide means and data for on-site testing and verifying of calibration of the primary in-line media flow sensor.

2. Chilled Water Meter

a. Provide Controlotron 990E Uniflow Ultrasonic meter with chilled water supply and return temperature sensors with BTU metering head and remote readout. Interface with the system.

F. Low Limit Alarms

1. Low temperature detectors (freeze-stats) shall be provided for any ducted intake with a water coil that can see temperatures below 35°F.

2. Electric low temperature warning sensors shall be provided and shall have 20’-0″ low point sensitive elements installed to cover the entire coil area. Provide a minimum of one freezestat per 30 sq.ft. of coil area. Where there are multiple coils, provide one (1) freezestat per coil. Sensors shall be wired to their respective monitoring panel (for freeze alarm) and, separately, to shut down the fan motor. Assure that the bottom 6" of each coil is protected by a freezestat. Capillary shall be serpentine such that the distance between capillary runs shall not exceed 24”.

3. Where there are multiple coils, provide one (1) freezestat per coil. Sensors shall be wired to their respective monitoring panel (for freeze alarm) and, separately, to shut down the fan motor. Provide dual contact device to allow for status and safety circuit wiring without need for additional relay device. Assure that the bottom 6" of each coil is protected by a freezestat.

G. Pressure Transmitters

1. Pressure sensors and transmitters shall be selected to operate within pressure ranges of the systems as specified. Sensors and transmitters shall be mounted at the pipe tap as specified and wired to the digital system controller. Sensor shall be accurate to 0.5% across full pressure span. Sensor shall maintain integrity between 20°F and 75°F.

2. Dirty filter shall be sensed by an electric differential pressure relay with adjustable setpoint for each filter bank. Range shall be as required to meet project requirements. These points shall be mapped back to the network manager for alarm annunciation.

3. Air flow switch shall be sensed by an electric differential pressure relay with adjustable setpoint. Range shall be as required to meet project requirements. Provide dual contact device to allow for status and safety circuit wiring (ex. Humidifier airflow switch) without need for additional relay device.

H. Actuators

1. Electric Motors: Size to operate with sufficient reserve power to provide smooth modulating action or two-position action under all environmental conditions (temperature, low power voltage fluctuations, tight seal damper design, maximum air and water flow forces). Refer to tables 1 & 2 for failure mode requirements.

   a. Permanent Split-Capacitor or Shaded-Pole Type: Gear trains completely oil immersed and sealed. Equip spring-return motors with integral spiral-spring mechanism in housings designed for easy removal for service or adjustment of limit switches, auxiliary switches, or feedback potentiometer.

   b. Non spring-Return Motors for Valves Larger Than NPS 2-1/2": Size for running torque of 150 in. x lbf and breakaway torque of 300 in. x lbf.

   c. Spring-Return Motors for Valves Larger Than NPS 2-1/2": Size for running and breakaway torque of 150 in. x lbf.

   d. Non spring-Return Motors for Dampers Larger Than 25 Sq. Ft.: Size for running torque of 150 in. x lbf and breakaway torque of 300 in. x lbf.

   e. Spring-Return Motors for Dampers Larger Than 25 Sq. Ft.: Size for running and breakaway torque of 150 in. x lbf.

2. Electronic Damper and Valve Actuators: Direct-coupled type non-hydraulic designed for minimum 100,000 full-stroke cycles at rated torque. The actuator shall have rating of not less than twice the thrust needed for actual operation of the damper or valve

   a. Coupling: V-bolt and V-shaped, toothed cradle.

   b. Overload Protection: Electronic overload or digital rotation-sensing circuitry.

   c. Fail-Safe Operation: Mechanical, spring-return mechanism. Provide external, manual gear release on non-spring-return actuators.

   d. Actuators shall have the ability to be tandem mounted.

   e. All spring-return actuators shall have a manual override. Complete manual override shall take no more than 10 turns.

f. Power Requirements (Two-Position Spring Return): 24V ac or dc, Maximum 10VA.

g. Power Requirements (Modulating): Maximum 15 VA at 24V ac.

h. Proportional Signal: 2- to 10-V dc or 4 to 20 mA, and 2- to 10-V dc position feedback signal.

i. Temperature Rating: -22°F to 140ºF.

j. Run Time: 200 seconds open, 40 seconds closed.

k. All actuators shall have a 5 year warranty

l. Valve Actuators:

1) Size for torque required for valve close-off at maximum pump differential pressure (regardless of water loop system pressures).

2) Valve and Actuators shall come from the factory fully assembled and tested for functionality, close off, and leakage.

3) Spring Return Manual Override shall come with a 10 Degree Valve Preload to assure tight close off.

4) All valve actuators shall have manual override

m. Damper Actuators:

1) Size for running torque calculated as follows:

a) Parallel-Blade Damper with Edge Seals: 7 inch-pounds/sq. ft. of damper.

b) Opposed-Blade Damper with Edge Seals: 5 inch-pounds/sq. ft. of damper.

c) Parallel-Blade Damper without Edge Seals: 4 inch-pounds/sq. ft. damper.

d) Opposed-Blade Damper without Edge Seals: 3 inch-pounds/sq. ft. of damper.

e) Dampers with 2 to 3 Inches wg. of Pressure Drop or Face Velocities of 1000 to 2500 FPM Multiply the minimum full-stroke cycles above by 1.5.

f) Dampers with 3 to 4 Inches wg. of Pressure Drop or Face Velocities of 2500 to 3000 FPM Multiply the minimum full-stroke cycles above by 2.0.

2) Spring Return Manual Override actuators shall a factory set 5 Degree Damper Preload.

3. Tracking conventional VAV box damper actuators shall be electronic and shall mount on the damper shaft and shall provide complete modulating control of the damper.

a. The actuator motor shall de-energize when the damper has reached the operator or system determined position.

b. Damper actuator position status shall be monitored from the central or remote operator's terminal and shall be displayed in percent open notation. Systems which provide only end switch feedback are not acceptable.

c. The actuator shall be a removable and separate device from the Terminal Equipment Control Unit. If integral to the Terminal Equipment Control Unit, the actuator shall be removable for servicing without removing the Terminal Equipment Control Unit.

d. Laboratory (Phoenix) air valve actuators shall be pneumatic, as specified under the "Laboratory CFM Tracking Air Valves" section of these specifications.

I. Control Valves

1. Control Valves: Factory fabricated, of type, body material, and pressure class based on maximum pressure and temperature rating of piping system, unless otherwise indicated. REFER to specification section 230523 for valve construction requirements and system service class.

2. Steam system globe valves shall have the following characteristics:

a. Rating: Class 125 for service at 125 psig. and 250°F operating conditions.

b. Temperature Requirements: Valve and actuator assembly shall be able to operate in ambient temperatures of -22°F to 140°F.

c. Product Life: Valve and actuator assembly shall be rated for a minimum of 200,000 cycles and tested for close off prior to delivery.

d. Internal Construction: Replaceable plugs and seats of stainless steel.

e. Single-Seated Valves: Cage trim provides seating and guiding surfaces for plug on top and bottom of guided plugs.

f. Double-Seated Valves: Balanced plug; cage trim provides seating and guiding surfaces for plugs on top and bottom of guided plugs.

g. Sizing:

1) 10 psig. inlet pressure and 5 psig. pressure drop.

2) Pressure drop across steam valve at a maximum flow of 80 percent of inlet pressure for low-pressure systems and 42 percent for high-pressure systems.

3) 15 psig steam maximum inlet pressure for bronze body globe valves ½" to 2".

4) 35 psig steam maximum inlet pressure for cast iron globe valves 2 ½" to 6".

3. Modulating pressure independent control valves.

a. All valves and actuators supplied under this specification must be from a single manufacturer. Installation procedures, commissioning, functionality, and flow performance must remain identical throughout all sizes supplied and installed. Acceptable manufacturers shall be:

1) Belimo
2) FlowCon
3) Danfoss (Basis of Design)

b. Warranty: Valve and actuator shall be warranted by the manufacturer for 5 years from the date of purchase.

c. The temperature control valve

1) Balancing valves, auto flow limiters, and associated balancing **shall not be used** where pressure independent temperature control valves are installed.
2) The valve will be pressure independent, and control pressure across the control valve orifice. Valve shall require no more than 5 PSID to operate pressure independent.
3) The control valve must have the ability to limit flow to the maximum design flow specific for each coil. Flow shall not vary more than +/-5% through the entire operating pressure range of 5 to 60 psi
4) Control valve range-ability shall be 100:1 minimum.
5) Provide **user adjustable** maximum flow within valve control range; Adjustment method shall indicate percentage of valve flow range and utilize spring locked method of adjustment.
6) Controlling the regulation of pressure shall be mechanical only (no metering) utilizing an integrated EPDM diaphragm design, stainless steel spring, and pressure control disc and shall require no internal maintenance or replaceable cartridges.
7) Regulate internal control valve differential pressure to provide 100% control valve authority at all positions of the valve, and maintain proportional / linear flow coil characteristics and maintain

a linear flow characteristic throughout the operating range of 5 to 60 psi

8) Be offered in sizes ranging ½” to 10”, providing a flow rate range of 0 to 1946 gpm
9) Be available in union tailpiece kits for sizes ranging from ½” to 2”; and flanges for sizes ranging from 2-1/2" to 10'; if ISO gaskets are required the manufacturer will supply an adequate quantity for the project.
10) Provide back seated globe design. Valve bodies 2” [50mm] and smaller shall be brass. Valve bodies 3” [80mm] thru 8” [200mm] shall be ductile iron. Valve shall provide Class 4 shut-off on all sizes.
11) The manufacturer shall provide 3rd party operation and flow documentation to certify the characteristics of the valve.
12) Pressure independent control valves shall be installed by the mechanical (piping) contractor and supplied by the temperature control contractor.
13) The valves maximum coil flow setting shall be the responsibility of the mechanical contractor and must be completed prior to the installation of the actuator by the temperature control contractor

d. The temperature control valve actuator

1) Electronic Actuator shall be self-learning, and have the ability to self-commission to match the set point flows of the valves.
2) Be an actuator from the same manufacturer as the valve.
3) The actuator shall provide full stroke at each flow setting of the valve.
4) Actuator mounting shall be integral with the valve body on sizes thru 1¼".
5) Have the ability to supply on/off, floating, proportional, safety spring and/or feedback options.
6) Be available in a thermostatic, thermal or electronic version.
7) Provide a visible position indication.
8) Operate the valve through its full range and have a minimum close off pressure of 90psi.
9) Have an option of selectable system characteristic (Log or Lin) for motorized actuators.
10) The actuator shall be selected, supplied, installed and commissioned by the temperature control contractor.

J. Dampers

1. All automatic dampers shall be furnished by the Automatic Temperature Control Contractor. Dampers shall be single or multiple blades as required. Dampers shall be installed by the Sheet Metal Subcontractor, under the supervision of the Temperature Control Subcontractor. All blank-off plates and conversions necessary to install smaller or larger than duct size dampers shall be the responsibility of the Sheet Metal Subcontractor. All dampers shall be equal to Ruskin Models CD-50 (rectangular) or CDR-25 (round).

2. All damper frames shall be constructed of extruded aluminum with 5"x1"x1.25" extruded aluminum and shall have flanges for duct mounting. All multiple damper sections must have jackshafts.

3. Damper blades shall not exceed 6" in width. All blades shall be of extruded aluminum airfoil type construction, fabricated from 6063-T5 aluminum. Blades shall be suitable for high velocity performance, ultra-low leakage type, with leakage not greater than 6.2 cfm/sq.ft. at 4" w.g. pressure differential for 48"x48" damper size, as published and certified under AMCA Certified Ratings Program. Damper leakage shall be less than 0.1% of total CFM at maximum damper system velocity.

4. All damper bearings shall be made of nylon or molded synthetic, bushings that turn in the bearings are to be oil impregnated sintered metal.

5. Replaceable butyl rubber seals shall be provided with the damper. Seals shall be installed along the top, bottom and sides of the frame and along each blade edge. Seals shall provide a tight closing, low leakage damper. Leakage and flow characteristic charts must be submitted to the Engineer prior to approval of dampers.

6. The HVAC Contractor shall provide an access door upstream and downstream of each automatic damper location.

7. Dampers: AMCA-rated, parallel, opposed blade designs; 0.1084 inch minimum, galvanized-steel frames with holes for duct mounting; damper blades shall not be less than 0.0635 inch galvanized steel with maximum blade width of .8 inches.

   a. Blades shall be secured to 1/2-inch diameter, zinc-plated axles using zinc-plated hardware, with nylon blade bearings, blade-linkage hardware of zinc-plated steel and brass, ends sealed against spring-stainless-steel blade bearings, and thrust bearings at each end of every blade.
   b. Operating Temperature Range: -40°F to 200°F
   c. For standard applications, include optional closed-cell neoprene edging.
   d. For low-leakage applications, use parallel- or opposed-blade design with inflatable seal blade edging, or replaceable rubber seals, rated for leakage at less than 10 cfm per sq. ft. of damper area, at differential pressure of 4 inches wg. when the damper is being held by torque of 50 in. x lbf; when tested according to AMCA 500D.

K. Electrical Power Consumption and Demand Meters

1. The building shall have one electric power services. The Electrical Subcontractor shall furnish and install new consumption and demand initiation devices on the new building electric consumption and demand check meter. The Automatic Temperature Control Contractor shall wire and program the above devices such that electricity consumption (FWH) and demand (kW) are read and recorded by the Building Automation System (BAS) and the Central Facilities Management System.

2. The pulse rate shall be determined by the Electrical Subcontractor.

L. Room Type Instruments

1. DDC room sensors shall be linear precision resistance elements with an accuracy of ±0.5%. Local setpoint adjustment shall be available to change setpoint ±4°F. This setpoint shall be capable of being overridden by the Building Automation System.

2. Mechanical and electric room thermostats shall be of the heavy duty, all-metal type.

3. Provide electric/electronic or pneumatic thermostats as required to suit the control application as outlined herein.

M. Smoke Detection System

1. The HVAC Contractor shall install smoke detectors furnished by the Electrical Subcontractor in all ductwork and/or equipment, as applicable. The Automatic Temperature Control Contractor shall provide all interlocking of air handling units to shut down upon activation (units and fans with capacity of 2000 cfm and larger). Alarm connection of the smoke detectors to building fire alarm system shall be by the Electrical Contractor.

2. All supply and return ventilation systems 2000 cfm and larger shall automatically stop when the in-duct smoke detectors are activated, except where return systems are utilized for smoke exhaust.

3. For supply systems 15,000 cfm and larger, the HVAC Contractor shall provide normally open smoke dampers. Automatic Temperature Control Contractor shall provide all interlocking required controlled in a way that upon fan shutdown, due to fire and/or smoke detection, the smoke dampers will automatically close. The reverse sequence shall occur where dampers are called for to be normally closed.

4. Smoke dampers (at air handling units) shall be properly controlled in a way that the system fans shall not start until dampers are open, except where coordination for fan start-up is required in the Sequences of Operation and system fans shall be shut off before smoke dampers are fully closed. All end switches, damper switches, etc., required shall be provided by the Automatic Temperature Control Contractor.

N. High Static Pressure Sensors (Typical for ALL fan systems)

1. For single supply/return/exhaust fans provide a static safety between the fan and the isolation damper. For AHU/EAHU’s provide a pair of analog static safeties located in each of the supply and exhaust fan's suction/discharges. All static safeties shall be hardwired to the MCC/VFD to stop the fan(s) upon activation and, in addition, send their signals to the BAS system. Provide dual contact device to allow for status and safety circuit wiring without need for additional relay device. One side of each switch shall sense the pressure to be measured and

the other side shall reference atmospheric pressure. The static pressure sensor shall be set as follows unless specifically indicated elsewhere in these specifications:

a. AHU/EAHU: set for 1”w.c. greater than the total pressure of the fan when installed measuring the within the unit.

b. Ductwork: set for the pressure class of the ductwork being measured.

O. Air Flow Measuring Station

1. GENERAL: The HVAC Contractor shall provide a Flow Measuring Station at the inlet of each fan in built-up air handling and in the main exhaust ductwork of each EAHU. The Automatic Temperature Control Contractor shall furnish duct mounted Flow Measuring Stations for supply main and return main ductwork at packaged air handling units (the HVAC Contractor shall install the Flow Measuring Stations).

a. Acceptable Manufacturers (Provided they are in compliance with these specifications)

1) Space Pressure Monitor & Controller

a) Setra
b) Air Monitor Corporation
c) Paragon Controls Inc
d) TSI

2) Airflow/Temperature Measurement Device

a) EBTRON, Inc. (basis of design)
b) Air Monitor Corporation (Electra-flo Series)
c) Paragon Controls Inc.

2. Airflow/Temperature Measurement Devices

a. General

1) Each element designed and built to comply with, and provide results in accordance with, accepted practice for duct system traversing as defined in the ASHRAE Handbook of Fundamentals, AMCA publication #203, as well as the Industrial Ventilation Handbook.

2) The number of sensing element, and the quantity of elements utilized at each installation, shall comply with ASHRAE Standard #111 for equal area duct traversing.

3) The airflow traverse elements shall produce steady, non-pulsating signals of true flow, with an accuracy of 2% of actual flow for operating velocities as low as 50 feet per minute.

4) The operating temperature range for the measuring probes shall be -20° F to 140° F. The operating humidity range for the measuring probe shall be 0-99% RH (non-condensing).

5) The airflow traverse elements shall not induce a pressure drop greater than 0.2 inches of water column at 4000 feet per minute.

6) The units shall have a self-generated sound rating of less than NC35 and the sound level within the duct shall not be amplified, nor shall additional sound be generated.

b. Products Included in this Section:

1) Duct and plenum mounted airflow measurement devices

2) Fan inlet mounted airflow measurement devices

c. Provide airflow/temperature measurement devices where indicated on the plans. Fan inlet sensors shall not be substituted for duct or plenum sensor probes indicated on the plans.

1) Duct and plenum mounted sensors shall be fabricated of anodized aluminum alloy tube with 303/304 stainless steel mounting brackets.

2) Fan inlet probes shall be field adjustable to fit the fan inlet and have 303/304 stainless steel mounting feet.

d. Each measuring device shall consist of one or more multi-point measuring probes and a single microprocessor-based transmitter. Each transmitter shall have an LCD display capable of displaying airflow and temperature. Airflow shall be field configurable to be displayed as a velocity or volumetric rate. Each transmitter shall operate on 24 VAC.

e. Each sensing point shall independently determine the airflow rate and temperature, which shall be equally weighted and averaged by the transmitter prior to output. Devices, which average multiple non-linear sensing point signals, are not acceptable. Pitot tube arrays are not acceptable.

f. A single manufacturer shall provide both the airflow/temperature measuring probe(s) and transmitter at a given measurement location. Probes and transmitters shall not require field matching for proper operation.

g. The operating airflow range shall be 50-5,000 FPM unless otherwise indicated on the plans.

h. The operating temperature range for the measuring probes shall be -20° F to 140° F. The operating humidity range for the measuring probe shall be 0-99% RH (non-condensing).

i. The operating temperature range for the transmitter shall be -20° F to 120° F. The transmitter shall be protected from weather and water.

j. Each independent airflow sensor shall have a laboratory accuracy of +/-2% of reading over the entire operating airflow range and be wind tunnel calibrated or verified against standards that are traceable to NIST.

1) Devices whose accuracy is the combined accuracy of the transmitter and sensor probes must demonstrate that the total accuracy meets the performance requirements of this specification throughout the measurement range.

k. Each independent temperature sensor shall have a laboratory accuracy of +/-0.15° F over the entire operating temperature range and be calibrated or verified against standards that are traceable to NIST.

l. The number of sensors for each location shall be as follows:

1) Ducts and plenums:

Area (sq.ft.)	Sensors
<=1	2
>1 to <4	4
4 to <8	6
8 to <12	8
12 to <16	12
>=16	16

2) Fan inlets: 2 per inlet

m. The airflow/temperature measuring device shall be capable of displaying the airflow and temperature readings of each sensor on the transmitter's LCD display.

n. The transmitter shall fully communicate with the host controls and the ATC utilizing one of the following interface options:

1) Linear analog output signals for airflow and temperature: Field selectable, fuse protected and electrically isolated from all other circuitry, 0-5VDC / 0-10VDC / 4-20mA (4-wire)

2) RS-485: Field selectable BACnet-MS/TP, Modbus-RTU or Johnson Controls N2-Bus

a) BACnet devices shall provide analog variables for airflow and temperature containing individual sensor airflow rate and temperature data.

3) 10 Base-T Ethernet: Field selectable BACnet Ethernet, BACnet-IP, Modbus-TCP and TCP/IP

a) Provide dynamic link libraries and VBA functions to interface Ethernet devices to Microsoft Excel for remote monitoring of airflow and temperature using a MS Windows - based PC.

o. Airflow/Temperature measuring devices shall be UL listed as an entire assembly.

p. The manufacturer's and or there authorized representative shall review and approve placement and operating airflow rates for each measurement location indicated on the plans. A written report shall be submitted to the consulting mechanical engineer if any measurement locations do not meet the manufacturer's placement requirements.

P. Temperature Sensors (Air Handling Units & EAHU's)

1. All air handling unit temperature sensors shall be averaging sensors which cover the entire area of airflow with multiple sensors provided as necessary to assure a maximum distance of 24" between sensor elements. Units shall be RTD type.

Q. Carbon Dioxide (CO_2) Sensors

1. Wall Mounted CO_2 Sensors

a. Shall be similar to Vaisala CARBOCAP® Carbon Dioxide Transmitter Model GMW25.

b. Wall mounted transmitter shall incorporate a silicon-based sensor.

c. Accuracy at 25°C (77°F): <± (40 ppm + 3% of reading). Measurement range of 0 to 2000 PPM for 0 to 100% RH (non-condensing) and -5 to 45°C (23 to 113°F).

d. Temperature coefficient of no larger than 0.15%FS/°C. Analog outputs must be jumper selectable: 0-20 mA, 4-20 mA, or 0-10V. Power supply shall be 24 VDC/VAC.

e. Long term stability shall be <+100 PPM per 5yrs. Must be capable of calibration check in place using certified gases or portable meter. Factory recommended calibration frequency of once per five (5) years.

2. Duct Mounted CO_2 Sensors

a. Duct mounted CO2 sensors shall be similar to Vaisala CARBOCAP® Carbon Dioxide Transmitter shall be similar to Model GMD20D (with display and relay).

b. Duct mounted transmitter shall incorporate a silicon-based sensor shall be similar to CARBOCAP® NDIR.

c. Transmitter shall not require a separate aspiration assembly. Sensor shall be in duct when installed with transmitter outside of duct.

d. Accuracy at 25°C (77°F) shall be <± (30 ppm + 2% of reading).

e. Measurement range of 0 to 2000 ppm for 0 to 100% RH (non-condensing) and -5 to 45°C (23 to 113°F). Unit shall be capable of being calibrated for other ranges: 0-5000 ppm, 0-10,000 ppm, 0-20,000 ppm. Temperature coefficient no larger than 0.15%FS/°C.

f. Analog outputs shall be jumper selectable: 0-20 mA, 4-20 mA, or 0-10V.

g. Power supply must be 24 VDC/VAC.

h. Long term stability shall be <+100 ppm per 5yrs. Must be capable of calibration check in place using certified gases or a portable meter. Factory recommended calibration frequency of once per five (5) years.

PART 3 – EXECUTION

3.1 INSTALLATION

A. All work shall be installed per manufacturer's instruction and recommendations.

END OF SECTION 255000

SECTION 25 9000 – SEQUENCES OF OPERATION

PART 1 – GENERAL

1.1 RELATED DOCUMENTS

A. Drawings and general provisions of the Contract, including General and Supplementary Conditions, Section 250500 and other Division 1 Specification Sections, apply to this Section.

B. LEED Building General Requirements: The Owner requires the Contractor to implement practices and procedures to meet the project's environmental performance goals, which include achieving LEED Certification. Specific project goals that may impact this area of work include: Use of recycled-content materials; use of locally-manufactured materials; use of low-emitting materials; construction waste recycling; and the implementation of a construction indoor air quality management plan. The Contractor shall ensure that the requirements related to these goals, as defined in the sections below, are implemented to the fullest extent. Substitutions, or other changes to the work proposed by the Contractor or their Subcontractors, shall not be allowed if such changes compromise the stated LEED Building Performance Criteria.

1. Comply with LEED (Leadership in Energy and Environmental Design) Green Building Rating System BD+C, Version 3.

1.2 WORK INCLUDED

A. Furnish and install temperature controls.

1.3 RELATED SECTIONS

A. Examine all drawings and criteria sheets and all other Sections of the Specifications for requirements which affect work under this Section whether or not such work is specifically mentioned in this Section.

B. Section 017419 "Construction Waste Management and Disposal" for requirements related to construction waste management and disposal at the project site.

C. Section 018113 "VOC Limits for Adhesives, Sealants, Paints and Coatings" for restrictions of VOC in adhesives, sealants, paints and coatings.

D. Section 018119 "Construction Indoor Air Quality (IAQ) Management" for requirements during construction for indoor-air-quality management.

1.4 SUBMITTALS

A. See Section 250500 and General Conditions for additional requirements.

B. Product Data: Provide data for materials.

C. Prepare and submit sequences and drawings.

D. Manufacturer's Installation Instructions.

1.5 QUALITY ASSURANCE

A. All sequences shall be made functional.

PART 2 – PRODUCTS

2.1 GENERAL

A. Provide a complete and operational temperature control and building automation system based on the following points and sequence of operation. The system shall be complete as to sequences and standard control practices. The determined point list is the minimum amount of points that are to be provided. If additional points are required to meet the sequence of operation, they will be provided.

B. Contract Plans and the BMS Points Listing shall be used together with the following sequence of operations to provide a complete and operational system.

C. BACnet Object List

1. The following points as defined for each piece of equipment are designated as follows:

a. Binary Out (BO) - Defined as any two-state output (start/stop) (enable/disable), etc.

b. Binary In (BI) - Defined as any two-state input (alarm, status), etc.

c. Analog In (AI) - Defined as any variable input (temperature) (position), etc.

d. Analog Out (AO) - Defined as any electrical variable output. 0–20mA, 4–20mA and 0–10VDC are the only acceptable analog outputs. The driver for analog outputs must come from both hardware and software resident in the controllers. Transducers will not be acceptable under any circumstance.

D. All set points referenced in this section are subject to change and shall be adjustable from the BMS Operator Interface or from a Portable Operators Terminal.

E. Unit isolation fire/smoke dampers shall be wired back to associated fan so that the dampers open/close with fan start/stop. Where dampers are located just up or down stream from the fan, the damper shall open and prove open via a damper mounted end switch prior to starting the fan motor.

2.2 HOT WATER HEATING SYSTEM

A. Steam to Hot Water Heat Exchangers (HE-1, 2)

1. The hot water heating and radiation systems share a common heat exchanger system which shall generate constant temperature (190˚F adj.) hot water year round. Piping to the building is separated into a year round constant temperature hot water heating loop; and a perimeter radiation system which is served by pumps and temperature mixing valve which shall start/stop and reset supply temperature based on outdoor air temperature.

2. The BMS contractor shall furnish and install BACnet DDC controls for automatic stand-alone control of the steam to hot water heat exchangers. The DDC controls shall be connected to the BMS for remote monitoring and control.

3. Once either set of pumps (HWP-1, 2, 3) or (HWP-4, 5, 6) is started indicating that there is a call for hot water the heat exchangers shall be enabled.

4. When enabled and steam is present as detected by the steam pressure switch and water flow is proven through a pipe mounted water flow switch the steam control valve(s) shall modulate to maintain the supply water temperature set point. Steam valves shall be closed unless water flow is proven.

5. No single steam valve shall be larger than 3" in size. Where the capacity requires a single valve larger than 3", two valves shall be installed in parallel and shall be sized for 1/3 and 2/3 capacity. Provide an individual control output to each control valve.

6. DDC Points:

   a. Steam Pressure Switch

   b. Hot Water Flow Switch

   c. Hot Water Supply and Return Temperature w/ High/Low Alarm

   d. Steam Valve Control

   e. Expansion Tank High/Low Pressure Alarm

B. Hot Water System Serving AHU's and Reheat Coils (HWP-1, 2, 3)

1. The BMS contractor shall furnish and install BACnet DDC controls for automatic control of the hot water pumps.

2. The operator shall have the ability to select pump lead/lag and pump manual/auto operation from switches mounted on the face of the local control panel. Indicator lights on the face of the panel shall indicate pump running status for each pump. A local alarm with audible/visual indication and silence switch shall also be mounted on the face of the panel. Alarms annunciated shall be pump fail and HW high temperature alarm.

3. The hot water system serving the AHU heating coils and reheat coils shall be enabled through the BMS, shall run continuously and shall be able to operate on an occupied/unoccupied schedule. Once enabled, the duty hot water pump shall start and slowly ramp up to speed control setpoint.

4. For the set of hot water pumps one pump is duty and the other is stand-by. Provide staging control of the pumps so if the duty pump fails, lock it out and start the stand-by pump. An alarm shall be annunciated to the BMS and local DDC panel. Rotate the duty and stand-by pumps on a regular schedule (adj.) to equalize runtime.

5. A differential pressure sensor shall be located just prior to the last load on the circuit. The sensor shall be wired to the same controller that controls the pump VFD and bypass valve. The pump VFD shall be controlled to maintain the hot water system differential pressure setpoint. If the pump is operating at the minimum VFD speed and the differential pressure is above setpoint, the differential pressure bypass valve shall modulate open to maintain set point.

6. DDC Points:

   a. Hot Water Pump Start/Stop

   b. Hot Water Pump Status

   c. Hot Water Pump VFD Speed Control

   d. Hot Water Pump VFD Malfunction

   e. Hot Water Pump Fail Alarm

   f. Hot Water Supply and Return Temperature w/ High/Low Alarm

   g. Hot Water Differential Pressure w/ High/Low Alarm

   h. Differential Pressure Bypass Valve Control

C. Hot Water System Serving Perimeter Radiation (HWP-4, 5, 6)

1. The BMS contractor shall furnish and install BACnet DDC controls for automatic control of the hot water pumps.

2. The operator shall have the ability to select pump lead/lag and pump manual/auto operation from switches mounted on the face of the local control panel. Indicator lights on the face of the panel shall indicate pump running status for each pump. A local alarm with audible/visual indication and silence switch shall also be mounted on the face of the panel. Alarms annunciated shall be pump fail and HW high temperature alarm.

3. The hot water system serving the perimeter radiation shall be enabled/disabled based on outdoor air temperature. When the outdoor air temperature is below 58

°F (adj.) the lead pump shall start and when the outdoor air temperature is above 60°F (adj.) all pumps shall stop.

4. Once enabled, the duty hot water pump shall start and slowly ramp up to speed control setpoint.

5. For the set of hot water pumps one pump is duty and the other is stand-by. Provide staging control of the pumps so if the duty pump fails, lock it out and start the stand-by pump. An alarm shall be annunciated to the BMS and local DDC panel. Rotate the duty and stand-by pumps on a regular schedule (adj.) to equalize runtime.

6. The temperature control valve shall modulate to maintain the loop hot water supply temperature set point. The hot water supply temperature set point shall be reset by outside air temperature as follows:

Outside Air Temperature	Set Point
50°F	110°F
30°F	150°F
0°F	180°F

7. DDC Points:

   a. Hot Water Pump Start/Stop

   b. Hot Water Pump Status

   c. Hot Water Pump VFD Speed Control

   d. Hot Water Pump VFD Malfunction

   e. Hot Water Pump Fail Alarm

   f. Hot Water Differential Pressure w/ High/Low Alarm

   g. Hot Water Supply and Return Temperature w/ High/Low Alarm

   h. HW Supply Temperature Valve Control

   i. Outdoor Air Temperature

D. Glycol Heat Recovery System (HWP-7 & 8)

1. The BMS contractor shall furnish and install BACnet DDC controls for automatic control of the glycol heat recovery system.

2. The operator shall have the ability to select pump lead/lag and pump manual/auto operation from switches mounted on the face of the local control panel. Indicator lights on the face of the panel shall indicate pump running status for each pump. A local alarm with audible/visual indication and silence switch shall also be

mounted on the face of the panel. Alarms annunciated shall be pump fail.

3. The heat recovery pump shall start through a signal from the BMS based on outdoor air temperature. The AHU and Lab Exhaust Fan shall both be running prior to starting the pump. When the outdoor air temperature is below 50ºF (adj.) or above 80ºF (adj.) the glycol water pump shall start and slowly ramp up to speed control set point. The pump shall operate continuously until the outdoor air temperature rises or falls 2ºF (adj.) above or below the set point.

4. For the set of glycol water pumps, HWP-6 & 7, one pump is duty and the other is stand-by. Provide staging control of the pumps so if the duty pump fails, lock it out and start the stand-by pump. An alarm shall be annunciated to the BMS and local DDC panel. Rotate the duty and stand-by pumps on a regular schedule (adj.) to equalize runtime.

5. The glycol loop temperature shall be monitored by the BMS and if the temperature falls below 35ºF (adj.) then the glycol loop injection pump, HWP-5, shall start and run until the loop temperature has risen 2ºF (adj.) above the desired low limit set point.

6. DDC Points:

   a. Hot Water Heat Recovery Pump Start/Stop

   b. Hot Water Heat Recovery Pump Status

   c. Hot Water Heat Recovery Pump VFD Speed Control

   d. Hot Water Heat Recovery Pump VFD Malfunction

   e. Hot Water Heat Recovery Pump Fail Alarm

   f. Glycol Injection Pump Start/Stop

   g. Glycol Injection Pump Status

   h. Glycol Injection Pump Fail Alarm

   i. Hot Water Glycol Supply and Return Temperature w/ High/Low Alarm

   j. Outdoor Air Temperature

2.3 CHILLED WATER SYSTEM

A. DDC Points:

1. CHW Pump Start/Stop

2. CHW Pump Status

3. CHW Pump VFD Speed Control

4. CHW Pump VFD Malfunction

5. CHW Pump Fail Alarm

6. CHW Flow

7. CHW Differential Pressure with High / Low Alarm

8. CHW Supply and Return Temperature w/ High/Low Alarm

9. Expansion Tank High/Low Pressure Alarm

B. A differential pressure sensor shall be located just prior to the last load on the chilled water loop. The sensor shall be wired to the same controller that controls the pump VFD and pressure bypass valve. The pump VFD shall be controlled to maintain the chilled water system differential pressure set point subject to the minimum recommended chilled water flow set point for the chillers. If the pump is operating at the minimum allowed VFD speed and the differential pressure is above set point, the differential pressure bypass valve shall modulate to maintain set point.

C. Secondary Chilled Water System Serving Process Chilled Water System (SCHP-4, 5)

1. The BMS contractor shall furnish and install BACnet DDC controls for automatic stand-alone control of the secondary chilled water system. The DDC controls shall be connected to the BMS for remote monitoring and control.

2. The operator shall have the ability to select pump lead/lag and pump manual/auto operation from switches mounted on the face of the local control panel. Indicator lights on the face of the panel shall indicate pump running status for each pump. A local alarm with audible/visual indication and silence switch shall also be mounted on the face of the panel. Alarms annunciated shall be pump fail.

3. The secondary chilled water system shall start through the BMS and shall run continuously and be able to operate on an occupied/unoccupied schedule. When the secondary chilled water system is enabled, the lead secondary chilled water pump shall start and slowly ramp up to speed control set point.

4. A differential pressure sensor shall be located just prior to the last load on the secondary chilled water loop. The sensor shall be wired to the same controller that controls the pump VFD and pressure bypass valve. The pump VFD shall be controlled to maintain the chilled water system differential pressure set point. If the pump is operating at the minimum allowed VFD speed and the differential pressure is above set point, the differential pressure bypass valve shall modulate to maintain set point.

5. For the set of secondary chilled water pumps one pump is duty and the other is stand-by. Provide staging control of the pumps so if the duty pump fails, lock it out and start the stand-by pump. An alarm shall be annunciated to the BMS and

local DDC panel. Rotate the duty and stand-by pumps on a regular schedule (adj.) to equalize runtime.

6. The process chilled water loop shall be controlled to a supply water temperature of 60˚F (adj.) by modulating the temperature control valve.

7. DDC Points:

   a. Secondary CHW Pump Start/Stop

   b. Secondary CHW Pump Status

   c. Secondary CHW Pump VFD Speed Control

   d. Secondary CHW Pump VFD Malfunction

   e. Secondary CHW Pump Fail Alarm

   f. Secondary CHW Differential Pressure w/ High/Low Alarm

   g. Secondary CHW Supply and Return Temperature w/ High/Low Alarm

   h. Differential Pressure Bypass Valve Control

   i. Secondary CHW Supply Temperature Valve Control

2.4 AIR SYSTEMS

A. 100% Outdoor Air Handling Unit (AHU-2 thru 4, Heat Wheel; AHU-5, Glycol Coil)

1. The BMS contractor shall provide BACnet DDC controls for complete stand-alone operation that shall tie into the building BMS. The BMS contractor shall connect the DDC controller to the BMS network for point monitoring and control from the operator interface. Provide one DDC controller per system.

2. Low temperature detectors (freeze stats), mounted upstream of the cooling coil, shall stop the fan when the cooling coil entering temperature falls below 38°F. The heating coil shall be controlled to maintain 100°F at the discharge of the heating coil. All other controls shall return to their normal position. Provide control program so temperature after heating coil is never below 40°F. The freeze stats shall be manually reset.

3. For fans greater than 2,000 CFM, provide a high discharge static pressure switch if dampers are located upstream of the fan and/or a low static pressure switch if dampers are located downstream of the fan to prevent mechanical damage if a damper fails to open. The switch shall stop the fan when duct pressure exceeds design. The fan shall remain off until the pressure switch is reset.

4. The AHU shall be started by the BMS based upon a start time optimization program, time of day schedule, or manual command. Upon a command to start,

all associated supply air dampers shall open and the outside air damper shall open and prove open through damper mounted limit switch. The supply fan shall start and slowly ramp up to speed control set point and shall run continuously.

5. The supply fan variable speed drive shall be controlled to maintain the supply static pressure set point, as sensed at a point 2/3 downstream of the supply fan.

6. AHU-5: The heat recovery pump shall start through a signal from the BMS based on outdoor air temperature. The AHU and Lab Exhaust Fan shall both be running prior to starting the pump. When the outdoor air temperature is below 50ºF (adj.) or above 80ºF (adj.) The glycol water pump shall start and operate continuously until the outdoor air temperature rises or falls 2ºF (adj.) above or below the set point.

7. AHU-2 thru 4: The BAS shall send a signal to start and stop the heat recovery wheel based upon a comparison of exhaust air temperature to outside air temperature and supply air temperature (adj.).

8. The hot water coil valve shall be controlled in sequence with the chilled water coil valve to maintain discharge air set point.

9. Humidity Control:

    a. Humidification: space humidity levels shall be maintained at a minimum of 30% RH (adj.) as sensed in the general exhaust. If the humidity level approaches the low limit set point, the humidifier shall be enabled and controlled to maintain the exhaust humidity set point of 30% RH (adj.). The high humidity limit shall be located down stream from the humidifier and shall disable the humidifier if the high humidity level of 85% RH (adj.) is exceeded.

10. When the unit is indexed off, the supply fan shall stop and all associated dampers shall close, the heat recovery pump shall stop and the cooling shall be off. The heating coil valve shall be controlled to maintain 45°F heating coil discharge temperature.

11. Monitor differential pressures across filter and annunciate alarm when differential pressure set point is exceeded.

12. If the supply fan fails to operate, an alarm shall be annunciated at the BMS and dampers shall be indexed to their system off positions.

13. Supply air duct smoke detector shall stop the fan upon the presence of smoke through a signal from the fire alarm system. The Fire Alarm System shall signal the BMS when a fire alarm is present.

14. DDC Points:

    a. Supply Fan Start/Stop

b. Supply Fan Status

c. Supply Fan VFD Speed Control

d. Supply Fan VFD Malfunction

e. Supply Fan Fail Alarm

f. Heat Recovery Coil Discharge Temperature w/ High/Low Alarm

g. Heating Coil Discharge Temperature w/ High/Low Alarm

h. Heat Recovery Wheel Discharge Temperature w/ High/Low Alarm

i. Supply Air Discharge Temperature w/ High/Low Alarm

j. Supply Air Static Pressure w/ High/Low Alarm

k. Space Humidity w/ High/Low Alarm

l. Temperature Low Limit Alarm

m. High/Low Static Pressure Alarm

n. Dirty Filter Alarm

o. Heating Coil Valve Control

p. Cooling Coil Valve Control

q. Outdoor Air Damper Control

B. Air Handling Unit (AHU-1)

1. The BMS contractor shall provide BACnet DDC controls for complete stand-alone operation that shall tie into the building BMS. The BMS contractor shall connect the DDC controller to the BMS network for point monitoring and control from the operator interface. Provide one DDC controller per system.

2. Low temperature detectors (freeze stats), mounted upstream of the cooling coil, shall stop the fans when the cooling coil entering temperature falls below 38°F. The heating coil shall be controlled to maintain 100°F at the discharge of the heating coil. All other controls shall return to their normal position. Provide control program so temperature after heating coil is never below 40°F. The freeze stats shall be manually reset.

3. The AHU shall be started by the BMS based upon a start time optimization program, time of day schedule, or manual command. Upon a command to start during the occupied period, the outside air damper shall open to the minimum position and the exhaust and return air dampers shall be modulated to their

corresponding positions. During the unoccupied period, the outdoor air dampers shall remain closed.

4. The supply and return fans shall start and slowly ramp up to speed control set point and shall run continuously. The supply fan variable speed drive shall be controlled to maintain the supply static pressure set point, as sensed at a point 2/3 downstream of the supply fan. The return fan variable speed drive shall be controlled to maintain a constant air volume differential.

5. The hot water coil valve shall be controlled in sequence with the chilled water coil valve to maintain discharge air set point.

6. When the unit is indexed off, the supply and return fans shall stop, the outdoor and relief air dampers shall close and the return air damper shall open, all associated supply air and return air dampers shall close and the cooling shall be off. The heating coil valve shall be controlled to maintain 45°F heating coil discharge temperature.

7. Monitor differential pressures across filter and annunciate alarm when differential pressure set point is exceeded.

8. If the supply fan fails to operate an alarm shall be annunciated at the BMS and dampers shall be indexed to their normal off positions.

9. Supply and return air duct smoke detectors shall stop the fan upon the presence of smoke through a signal from the fire alarm system. The Fire Alarm System shall signal the BMS when a fire alarm is present.

10. DDC Points:

    a. Supply Fan Start/Stop

    b. Supply Fan Status

    c. Supply Fan VFD Speed Control

    d. Supply Fan VFD Malfunction

    e. Supply Fan Fail Alarm

    f. Return Fan Start/Stop

    g. Return Fan Status

    h. Return Fan VFD Speed Control

    i. Return Fan VFD Malfunction

    j. Return Fan Fail Alarm

k. Mixed Air Temperature w/ High/Low Alarm

l. Heating Coil Discharge Temperature w/ High/Low Alarm

m. Supply Air Discharge Temperature w/ High/Low Alarm

n. Supply Air Static Pressure w/ High/Low Alarm

o. Temperature Low Limit Alarm

p. High/Low Static Pressure Alarm

q. Dirty Filter Alarm

r. Heating Coil Valve Control

s. Cooling Coil Valve Control

t. Mixed Air Damper Control

C. Ventilation Systems

1. General

a. Interlock all associated dampers to open/close with fan start/stop. Provide positive indication where indicated on point summary.

b. BMS shall monitor the fan status via a current switch and shall track run times when fan is in operation. If the fan fails to operate an alarm shall be annunciated at the BMS and dampers shall be indexed to their normal off positions.

c. For fans greater than 2,000 cfm, provide a high discharge static pressure switch if dampers are located upstream of the fan and/or a low static pressure switch if dampers are located downstream of the fan to prevent mechanical damage if a damper fails to open. The switch shall stop the fan when duct pressure exceeds design. The fan shall remain off until the pressure switch is reset.

d. Exhaust air duct smoke detector shall stop the fan upon the presence of smoke through a signal from the fire alarm system. The Fire Alarm System shall signal the BMS when a fire alarm is present.

2. Fume Hood Exhaust Fans EF-1, 2, 3 & 4

a. The BMS contractor shall furnish and install BACnet DDC controls for automatic control of the lab exhaust fans.

b. Provide staging control of the exhaust fans so if a duty exhaust fan fails, lock it out and start the stand-by exhaust fan. An alarm shall be

annunciated to the BMS. Rotate the primary and stand-by exhaust fans on a regular schedule (adj.) to equalize runtime.

c. The fans shall be started through the BMS and run continuously. Once enabled the fan inlet isolation damper shall open and prove open through end switch then the fan shall start and slowly ramp up to speed control set point and run continuously. The exhaust fan VFD speed control set point shall be set with the air balancing contractor.

d. The dilution damper shall modulate to maintain the duct static pressure set point of -.2”WC (adj.). The pressure transmitter shall be located 2/3 upstream from the exhaust fan.

e. All associated dampers shall be interlocked to open/close with fan operation.

f. DDC Points:

1) Exhaust Fan Start/Stop

2) Exhaust Fan Status

3) Exhaust Fan VFD Speed Control

4) Exhaust Fan VFD Malfunction

5) Exhaust Fan Fail

6) Exhaust Duct Static Pressure w/ High/Low Alarm

7) Dilution Damper Control

3. General Exhaust Fans EF-5, 6, 7 & 8

a. The BMS contractor shall furnish and install BACnet DDC controls for automatic control of the general exhaust fans.

b. The fans shall be started through an interlock with the associated air handling units (AHU-2 thru 4). Once enabled the fan inlet isolation damper shall open and prove open through end switch then the fan shall start and slowly ramp up to speed control set point and run continuously. The exhaust fan shall modulate to maintain the duct static pressure set point. The pressure transmitter shall be located 2/3 upstream from the exhaust fan.

c. The dilution damper shall modulate to maintain the duct static pressure set point of -.2”WC (adj.). The pressure transmitter shall be located 2/3 upstream from the exhaust fan.

d. All associated dampers shall be interlocked to open/close with fan operation.

e. DDC Points:

1) Exhaust Fan Start/Stop

2) Exhaust Fan Status

3) Exhaust Fan VFD Speed Control

4) Exhaust Fan VFD Malfunction

5) Exhaust Fan Fail

6) Exhaust Duct Static Pressure w/ High/Low Alarm

7) Dilution Damper Control

4. Toilet Exhaust Fan

a. The fan shall be started by the BMS based upon a start time optimization program, time of day schedule, or manual command.

b. DDC Points:

1) Exhaust Fan Start/Stop

2) Exhaust Fan Status

3) Exhaust Fan Fail Alarm

2.5 MISCELLANEOUS SYSTEMS

A. Space Control - Supply Air Valve with Reheat & Associated Exhaust Air Valve (SAV / EAV / HV)

1. BMS Contractor shall install and wire all controls furnished by the air terminal device manufacturer. Coordinate mounting and wiring of controller, actuator, and transformer with the terminal equipment box manufacturer. The BMS contractor shall be responsible for furnishing, installing, and wiring any controls not furnished, installed, or wired by others that are required for an operational system.

2. Supply and return boxes shall be pressure independent and shall operate together to maintain the space pressure requirements.

3. The supply and exhaust VAV boxes shall be indexed on when the associated Air Handling Unit serving it starts. Space temperature sensor shall modulate in sequence actuator on supply/exhaust air terminals and reheat coil control valve to maintain space temperature set point.

4. On a drop in space temperature below cooling set point, supply air terminal shall

modulate from maximum to minimum airflow quantities as scheduled. Exhaust air terminal shall modulate in response to supply air terminal to maintain scheduled differential between measured exhaust and supply air flows. On a continued drop in space temperature below heating set point, reheat coil control valve shall modulate open

5. On a rise in space temperature above heating set point, reheat coil control valve shall modulate closed. On continued rise in space temperature above cooling set point, exhaust air terminal shall modulate from minimum to maximum airflow quantities as scheduled. Supply air terminal shall modulate in response to exhaust air terminal to maintain scheduled differential between measured exhaust and supply air flows. For positive (+) room pressurization set point, the offset shall be -100 CFM (field adjustable). Exact set point to be determined with air balance contractor.

6. DDC Points:

   a. Supply Damper Control

   b. Supply Damper Position

   c. Supply Airflow w/ High/Low Alarms

   d. Exhaust Damper Control

   e. Exhaust Damper Position

   f. Exhaust Airflow w/ High/Low Alarms

   g. Reheat Coil Valve Control

   h. Space Temperature w/ High/Low Alarms

   i. Space Temperature Set point

B. Zone Hot Water Reheat

1. The BMS contractor shall provide DDC control for the zone hot water reheat coil.

2. The reheat coil shall only operate when the associated Air Handling Unit serving it is operating. As the space temperature falls below the space temperature setpoint, the DDC controller shall modulate the reheat valve open as necessary to maintain space temperature at setpoint.

3. The space temperature sensor shall have a push-button override to index the space to the occupied mode for a timed period.

4. DDC Points:

a. Reheat coil valve control

b. Space temperature w/ high/low alarms

c. Space temperature set point

C. CV Box with Reheat

1. Provide one DDC controller and at least one temperature sensor for each CV box. Coordinate factory mounting and wiring of controller, actuator, and transformer with the box manufacturer. The BMS contractor shall be responsible for furnishing, installing, and wiring any controls not furnished, installed, or wired by others that are required for an operational system.

2. The CV box shall be indexed on when the associated Air Handling Unit serving it starts. The CV box damper shall modulate to maintain the flow set point. Modulate the reheat coil valve to maintain space temperature set point. As the space temperature falls below the space temperature set point, the reheat valve shall modulate open as necessary to maintain space temperature at set point.

3. The CV box shall be programmed for occupied and unoccupied settings. The space temperature sensor shall have a push-button override to index the space to the occupied mode for a timed period.

4. DDC Points:

a. Supply damper control

b. Supply damper position

c. Supply air flow w/ high/low alarms

d. Reheat coil valve control

e. Space temperature w/ high/low alarms

f. Space temperature set point

D. VAV Box with Reheat

1. Provide one DDC controller and at least one temperature sensor for each VAV box. Coordinate factory mounting and wiring of controller, actuator, and transformer with the VAV box manufacturer. The BMS contractor shall be responsible for furnishing, installing, and wiring any controls not furnished, installed, or wired by others that are required for an operational system.

2. The VAV box and shall be indexed on when the associated Air Handling Unit serving it starts. The VAV box damper shall modulate to maintain the space temperature. As the space temperature rises above the space temperature set point, the DDC controller shall modulate the VAV box damper from the

minimum to the maximum CFM setting as necessary to maintain the space temperature at set point. As the space temperature falls below the space temperature set point, the DDC controller shall modulate the VAV box damper to the minimum CFM set point. Upon a further fall in space temperature, the reheat valve shall modulate open as necessary to maintain space temperature at set point.

3. The VAV box shall be programmed for occupied and unoccupied settings. The space temperature sensor shall have a push-button override to index the space to the occupied mode for a timed period.

4. DDC Points:

    a. Supply damper control

    b. Supply damper position

    c. Supply air flow w/ high/low alarms

    d. Reheat coil valve control

    e. Space temperature w/ high/low alarms

    f. Space temperature set point

E. Chilled Water Fan Coil Unit

1. BMS Contractor shall furnish, install and wire DDC controls for each fan coil unit for local control and connection to the BMS.

2. A space temperature sensor shall control the cooling coil valve and fan.

3. When the room temperature is below the cooling set point, the cooling valve shall be closed and the fan shall be off. On a rise in room temperature above the cooling set point the cooling valve shall modulate open to maintain the desired space temperature set point and the fan shall start.

4. Install and wire the auxiliary drip pan single point leak detector that shall stop the FCU, close the chilled water valve and annunciate an alarm to the BMS upon detection of water.

5. DDC Points:

    a. Supply Fan Start/Stop

    b. Space Temperature w/ High/Low Alarms

    c. Space Temperature Set Point

    d. Discharge Air Temperature

e. Chilled Water Coil Valve Control

f. Leak Alarm

F. Hot Water Unit Heater

1. The BMS contractor shall furnish, install, and wire a thermostat to start and stop the unit heater and open or close the two-position electrically actuated spring return fail open valve in the hot water piping to the heater to maintain an adjustable room temperature.

2. An aqua-stat on the return line of each unit shall stop the unit when hot water is not available.

G. Hot Water Cabinet Unit Heater

1. The BMS contractor shall furnish, install, and wire a thermostat to start and stop the unit heater and open or close the two-position electrically actuated spring return fail open valve in the steam piping to the heater to maintain an adjustable room temperature.

2. An aqua-stat on the supply line of each unit shall stop the unit when steam is not available.

H. Heat Trace

1. The BMS shall monitor the on/off status of each heat trace system and shall override the heat trace system on and sound an alarm if outside air temperature falls below 38°F (adj.) and the heat trace system has not activated.

2. DDC Points:

a. Heat Trace Status

b. Heat Trace Off Alarm

I. Expansion Tank

1. The BMS contractor shall provide a pressure sensor to monitor the expansion tank for high/low pressure conditions.

2. Provide a water flow meter and annunciate an alarm if the water flow rate exceeds the high flow rate set point.

3. DDC Points:

a. Expansion Tank Pressure w/ High/Low Alarm

J. BTU Meter

1. The BMS contractor shall provide the BTU metering as shown on the plans and shall provide all of the available data through a network interface.

2. DDC Points:

   a. BTU Meter Points via Serial Interface

2.6 CHEMICAL TREATMENT

A. Chemical treatment systems shall be provided by the HVAC Contractor for all water systems. The ATC Contractor shall provide wiring between all components of the chemical treatment systems.

2.7 ELECTRICAL POWER MANAGEMENT MONITORING SYSTEM AND NORMAL/EMERGENCY POWER MONITORING

A. Power Management System Monitoring - Provide connections to the BAS to monitor the Electrical Power Management System (PMS) controllers. The Electrical Contractor shall retain and bear the cost of developing computer drivers for each of the PMS's. The ATC Contractor shall integrate the drives information into the campus automation system and extend all necessary cabling to interconnect with the PMS driver outputs.

B. Normal/Emergency Power Monitoring System - Provide DI points to sense the transfer of building power from normal-to-emergency and emergency-to-normal, plus the loss of power and normal testing. Each automatic transfer switch requires three (3) digital inputs as follows:

1. DI Undercurrent relay
2. DI Loss of normal power
3. DI Loss of emergency power

2.8 DEMAND CONTROL VENTILATION (AHU-1)

A. 15 minutes (adjustable) after the AHUs have started up, the CO_2 sensors in their outside air intakes shall report their readings to the BMS, which shall take one of the reported rates as the baseline CO_2 rate in the outside air.

B. If any room CO_2 sensor reports a CO_2 concentration greater than 600 ppm above the outdoor rate, that room's VAV terminal(s) shall modulate to maximum supply until the differential drops below 400 ppm, when normal thermostatic control shall resume.

C. If no more than one room (adjustable) served by either AHU reports a CO_2 concentration greater than 400 ppm above the outdoor rate in a 15 minute period, the BMS shall modulate the relief air, outside air, and mixing dampers to reduce the current outside air rate in that AHU by 5% (adjustable). This shall be allowed to repeat until a minimum outside air rate of 20% (adjustable) is reached.

D. If two or more rooms (adjustable) served by either AHU report a CO_2 concentration greater than 600 ppm above the outdoor rate in a 15 minute period, the BMS shall modulate the relief air, outside air, and mixing dampers to increase the current outside

air rate in that AHU by 5% (adjustable). This shall be allowed to repeat until the scheduled minimum outside air rate is reached.

END OF SECTION 259000

SECTION 260510 – ELECTRICAL SPECIAL CONDITIONS

PART 1 - GENERAL

1.1 RELATED DOCUMENTS

A. All of the Contract Documents, as listed on the Table of Contents and including General and Supplementary Conditions and Division 01, General Requirements, shall be included in, and made part of, this Section.

1.2 DESCRIPTION OF WORK

A. Carefully examine all of the Contract Documents, criteria sheets and all other Sections of the specifications for requirements which affect work under this Section, whether or not such work is specifically mentioned in this Section.

B. The work under this Contract shall include all labor, materials, tools, equipment, transportation, insurance, temporary protection, supervision and incidental items essential for proper installation and operation, even though not specifically mentioned or indicated on the drawings, but which are usually provided or are essential for proper installation and operation, of all systems as indicated on the drawings and specified herein.

C. The specifications and drawings describe the minimum requirements that must be met by the Electrical Contractor for the installation of all work as shown on the drawings and as specified hereinunder.

D. Coordinate work with that of all other Trades affecting or affected by the work of this Section. Cooperate with such Trades to assure the steady progress of all work under the Contract.

1.3 RELATED WORK

A. For work to be included as part of this Section, to be furnished and installed by the Electrical Contractor, refer to the following Sections:

1. Section 26 0520 – Basic Materials and Methods
2. Section 26 0530 – Wiring Methods
3. Section 26 0548 – Vibration and Seismic Controls for Electrical Systems
4. Section 26 0570 – Power System Studies
5. Section 26 0580 – Electrical Acceptance Tests
6. Section 26 0920 – Lighting Control System
7. Section 26 1120 – Secondary Unit Substations
8. Section 26 2010 – Low Voltage Distribution
9. Section 26 3010 – Electrical Power Generation
10. Section 26 4110 – Lightning Protection System
11. Section 26 4310 – Transient Voltage Surge Suppression
12. Section 26 5010 – Lighting Fixtures

B. For work to be included as part of other Divisions, to be furnished and installed by the Electrical Contractor, refer to the following Divisions:

1. Division 27 – Communications

   a. Section 27 5210 – Nurse Call System

2. Division 28 Electronic Safety and Security

   a. Section 28 3110 – Fire Alarm System

C. For work related to, and to be coordinated with the electrical work, but not included in this Section and required to be performed under other designated Divisions, see the following:

1. Division 01 - General Requirements

   a. Section 01 5100 - Temporary electricity
   b. Section 01 9100 - Commissioning

2. Division 02 – Existing Conditions

3. Division 03 Concrete

   a. Section 03 3000 – Cast-in-Place Concrete

4. Division 04 – Masonry

5. Division 05 – Metals

   a. Section 05 4516 – Electrical Metal Supports

6. Division 06 – Wood Plastics and Composites

7. Division 07 - Thermal and Moisture Protection

   a. Section 07 6200 – Sheet Metal Flashing and Trim
   b. Section 07 8000 – Fire and Smoke Protection

8. Division 08 – Openings

   a. Section 08 3100 – Access Doors and Panels

9. Division 09 – Finishes

   a. Section 09 9100 – Painting

10. Division 10 – Specialties

11. Division 11 – Equipment

12. Division 12 – Furnishings

13. Division 13 – Special Construction

14. Division 14 – Conveying Equipment

15. Division 21 - Fire Suppression

16. Division 22 - Plumbing

17. Division 23 – Heating Ventilating and Air Conditioning

18. Division 25 – Integrated Automation

19. Division 27 – Communications

20. Division 28 - Electronic Safety and Security

21. Division 31 - Earthwork

22. Division 32 – Exterior Improvements

23. Division 33 – Utilities

24. Division 34 – Transportation

1.4 REFERENCES

A. All materials and workmanship shall comply with all applicable Codes, Specifications, Local and State Ordinances, Industry Standards and Utility Company Regulations, latest editions.

B. In case of difference between Building Codes, State Laws, Local Ordinances, Industry Standards and Utility Company Regulations and the Contract Documents, the Electrical Contractor shall promptly notify the Architect in writing of any such difference.

C. In case of conflict between the Contract Documents and the requirements of any Code or Authorities having jurisdiction, the most stringent requirements of the aforementioned shall govern.

D. Should the Electrical Contractor perform any work that does not comply with the requirements of the applicable Building Codes, State Laws, Local Ordinances, Industry Standards and Utility Company Regulations, he shall bear all costs arising in correcting the deficiencies, as approved by the Architect/Owner.

E. Applicable Codes and Standards shall include all State Laws, Local Ordinances, Utility Company Regulations, and the applicable requirements of the latest adopted edition of the following Codes and Standards, without limiting the number, as follows:

1. NFPA 13: Sprinkler Systems

2. NFPA 70: National Electrical Code
3. NFPA 72: National Fire Alarm Code
4. NFPA 99: Health Care Facilities
5. NFPA 101: Life Safety Code
6. Occupational Safety and Health Standards
7. Environmental Protection Agency
8. National Fire Protection Association
9. Department of Environmental Protection
10. International Building Code (IBC)
11. Connecticut Building Code
12. Connecticut Electrical Code

F. In these specifications, references made to the following Industry Standards and Code Bodies are intended to indicate the latest volume or publication of the Standard. All equipment, materials and details of installation shall comply with the requirements and latest revisions of the following Bodies, as applicable:

1. ANSI: American National Standards Institute
2. ASTM: American Society of Testing Materials
3. AWG: American Wire Gauge
4. FM: Factory Mutual
5. IEEE: Institute of Electrical and Electronics Engineers
6. NEMA: National Electrical Manufacturers Association
7. UL: Underwriters' Laboratories

G. Electrical Contractor for the work in his scope of work shall give all necessary notices, obtain all permits, pay all governmental taxes, fees and other costs in connection with his work; file for necessary approvals with the jurisdiction under which the work is to be performed. Electrical Contractor shall obtain all required Certificates of Inspection for his respective work and deliver same to the Architect before request for acceptance of his portion of work is made and before final payment.

1.5 QUALITY ASSURANCE

A. Attention is directed to the provisions of Section 01 4000 regarding quality requirements for the work under this Contract. The Electrical Contractor shall review the requirements and assure all components are in compliance.

B. The manufacturers listed within these specifications have been preselected for use on this project. No submittal will be accepted from a manufacturer other than specified.

C. Electrical Contractor shall furnish and install all equipment, accessories, connections and incidental items necessary to fully complete the work under his Contract for use, occupancy and operation by the Owner.

D. Where equipment of a substitute manufacturer differ from that specified and require different arrangement or connections from those shown, it shall be the responsibility of the Subcontractor responsible for the substitution to modify the installation of the equipment/system to operate properly and in harmony with the original intent of the drawings and specifications. When directed by the Architect, the Electrical Contractor

shall submit drawings showing the proposed, substitute installation. If the proposed installation is accepted, the Electrical Contractor shall make all necessary changes in all affected related work provided under his and other Sections including location of roughing-in connections by other Trades, conduit, supports, etc. All changes shall be made at no increase in the Contract amount or additional cost to the Owner. The Construction Manager shall be responsible to assure that the Subcontractor responsible for the substitution bears the cost arising to all other Trades as a result of the substitution.

E. Unless specifically indicated otherwise, all equipment and materials required for installation under these specifications shall be new, unused and without blemish or defect. Equipment and materials shall be products which will meet with the acceptance of the Authorities having jurisdiction over the work and as specified hereinbefore. Where such acceptance is contingent upon having the products listed and/or labeled by FM or UL or another testing laboratory, the products shall be so listed and/or labeled. Where no specific indication as to the type or quality of material or equipment is indicated, a first class standard article shall be provided.

1.6 WARRANTY

A. Attention is directed to the provisions of the General Requirements and Supplementary General Requirements regarding guarantees and warranties for work under this Contract.

B. All warranties shall begin on the Date of Substantial Completion of the entire project or the Owner's acceptance of the workmanship and/or material covered by the warranty, whichever is later. The warranty coverage shall continue for the specified period. Refer to individual specification sections for warranty period. If no specific warranty period is specified, the warranty shall extend for a minimum of 365 days.

C. Manufacturers shall provide their standard warranties for work under the Electrical Trades. However, such warranties shall be in addition to, and not in lieu of, all other liabilities which the manufacturer and Electrical Contractor may have by law or by other provisions of the Contract Documents.

D. All materials, items of equipment and workmanship furnished under the Electrical Section shall carry the standard warranty against all defects in material and workmanship. Any fault due to defective or improper material, equipment, workmanship or design which may develop shall be made good, forthwith, by and at the expense of the Electrical Contractor for the work under his Contract, including all other damage done to areas, materials and other systems resulting from this failure.

E. The Electrical Contractor shall warranty that all elements of the systems which are to be provided under his Contract, are of sufficient capacity to meet the specified performance requirements as set forth herein or as indicated.

F. Upon receipt of notice from the Owner or Architect of failure of any part of the systems or equipment during the warranty period, the affected part or parts shall be replaced by the Electrical Contractor for his work or any other work affected by the failure(s).

G. Electrical Contractor shall furnish, before the final payment is made, a written warranty covering the above requirements in accordance with the General Requirements.

1.7 DEFINITIONS

A. Words in the singular shall also mean and include the plural, wherever the context so indicates, and words in the plural shall mean the singular, wherever the context so indicates.

B. Wherever the terms "shown on drawings" are used in the specifications, they shall mean "noted", "indicated", "scheduled", "detailed", or any other diagrammatic or written reference made on the drawings.

C. Wherever the term "provide" is used in the specifications it will mean "furnish" and "install", "connect", "apply", "erect", "construct", or similar terms, unless otherwise indicated in the specifications.

D. Wherever the term "material" is used in the specifications it will mean any "product", "equipment", "device", "assembly", or "item" required under the Contract, as indicated by trade or brand name, manufacturer's name, standard specification reference or other description.

E. The terms "approved", or "approval" shall mean the written approval of the Architect.

F. The term "Contract Documents" shall mean the entire set of Drawings and Specifications as listed in the Table of Contents of the General Conditions including all bound and unbound material and all items officially issued to date such as addenda, bulletins, job modifications, etc.

G. The term "specification" shall mean all information contained in the bound or unbound volume, including all "Contract Documents" defined therein, except for the drawings.

H. The terms "directed", "required", "permitted", "ordered", "designated", "prescribed", and similar words shall mean the direction, requirement, permission, order, designation or prescription of the Architect; the terms "approved", "acceptable", "satisfactory", and similar words shall mean approved by, acceptable or satisfactory to the Architect; and, the terms "necessary", "reasonable", "proper", "correct", and similar words shall mean necessary, reasonable, proper or correct in the judgment of the Architect.

I. "Accessible" indicates ease of access with or without the use of ladders and without requiring extensive removal of other equipment, such as ductwork, piping, etc. to gain access. "Accessible ceiling" indicates acoustic tile type hung ceilings. Concealed spline or sheetrock ceilings with access panels shall not be considered accessible ceilings.

J. "Concealed" means hidden from sight in chases, furred spaces, shafts, hung ceilings, embedded in construction or in crawl spaces.

K. "Exposed" means not installed underground or "concealed" as defined above.

L. “Medium voltage” refers to all equipment operating above 600 volts AC.

M. "Electrical Contractor" refers to the Subcontractor responsible for furnishing and installation of all work indicated on the Electrical drawings and in the Electrical specifications.

N. "Architect" shall refer to the Architect "Mitchell Giurgola Architects" and/or the Engineer "Bard, Rao + Athanas Consulting Engineers, LLC (BR+A)".

O. "Owner" shall refer to the Owner "University of Connecticut" or his designated representative.

P. “Construction Manager” shall refer to construction management firm.

Q. "Other Work Contractor" (O.W.C.) refers to the Contractor(s), or Subcontractor(s) performing work under other Sections of the Contract Documents.

1.8 THE SUBCONTRACTOR

A. The Electrical Contractor shall visit the site of the proposed new facility and base his bids from his own site examinations and estimates. The Electrical Contractor shall not hold the Architect, Engineer, Owner or their agents or employees responsible for, or bound by, any schedule, estimate or of any plan thereof. The Electrical Contractor shall study the Contract Documents included under this Contract to determine exactly the extent of work provided under this Contract, as well as to ascertain the difficulty to be encountered in performing the work, in installing new equipment and systems and coordinating the work with the other Trades and existing building conditions.

B. The Electrical Contractor shall faithfully execute his work according to the terms and conditions of the Contract and specifications, and shall take all responsibility for and bear all losses resulting to him in the execution of his work.

C. The Electrical Contractor shall be responsible for the location and performance of work provided under his Contract as indicated on the Contract Documents. All parties employed directly or indirectly by the Electrical Contractor shall perform their work according to all the conditions as set forth in these specifications.

D. The Electrical Contractor shall furnish all materials and do all work in accordance with these specifications, and any supplementary documents provided by the Architect. The work shall include everything shown on the drawings and/or required by the specifications as interpreted by the Architect, regardless of where such information is indicated in the Contract Documents (Architectural, HVAC, Plumbing, Fire Protection, etc.). Unless specifically indicated otherwise, all work and materials furnished and installed shall be new, unused and of the best quality and workmanship. The Electrical Contractor shall cooperate with the Architect so that no error or discrepancy in the Contract Documents shall cause defective materials to be used or poor workmanship to be performed.

1.9 COORDINATION OF WORK

A. The Electrical Contractor shall compare his drawings and specifications with those of other Trades as well as the Architectural drawings and specifications, and report any

discrepancies between them to the Architect and obtain from the Architect written instructions for changes necessary in the electrical work.

B. Coordinate work with that of all other Trades affecting or affected by the work of this Section. Cooperate with such Trades to assure the steady progress of all work under the Contract.

C. All work shall be installed in cooperation with other Trades installing interrelated work. Before installation, Electrical Contractor shall make proper provisions to avoid interferences in a manner approved by the Architect. All changes required in the work of the Electrical Contractor or that of any other trade caused by the Electrical Contractor's neglect, shall be made by him at his own expense, to the Architect's satisfaction.

D. **The Electrical Contractor must include in his bid sufficient dollar amounts to coordinate the work of this Contract. This project is complex and will require additional time to coordinate all Trades and allow implementation of the Owners Standards and maintenance serviceability requirements. This requirement shall include, but not be limited to, producing the coordination drawings, as many times and as many drawings as required, to ensure serviceability of equipment, as approved by the Architect.**

E. Locations of conduits, boxes distribution equipment, systems, etc. shall be adjusted to accommodate the work with interferences anticipated and encountered. The Electrical Contractor shall determine the exact routing and location of his systems prior to fabrication or installation of any system component. Accurate measurements and coordination drawings shall be completed to verify dimensions and characteristics of the various systems installations.

F. Lines which pitch shall have the right-of-way over those which do not pitch. For example, steam piping shall normally have the right-of-way. Lines whose elevations cannot be changed shall have the right-of-way over lines whose elevations can be changed.

G. Offsets, transitions and changes of direction in all systems shall be made as required to maintain proper headroom and pitch of sloping lines whether or not indicated on the drawings. The Electrical Contractor shall provide elbows, conduit bends, "LB" fittings, offsets in busway, etc. as required for his work to effect these offsets, transitions and changes in direction.

H. All work shall be installed in a way to permit removal (without damage to other parts) of pull and junction box covers, wiring, lighting fixtures, and all other system components provided under this Contract requiring periodic replacement or maintenance. All pull and junction boxes shall be arranged in a manner to clear the openings of swinging overhead access doors as well as ceiling tiles. All work shall be done to allow easy access for maintaining equipment. The Owner and Engineer will require proof via the preparation of large scale sections and part plans that pull and junction boxes, etc. are accessible after the work is completed. Any items in the field discovered to be in non-compliance shall be removed and relocated, as required, and as directed by the Architect.

I. The Contract Drawings are diagrammatic only intending to show general runs and locations of conduits, distribution equipment, lighting fixtures, systems equipment, etc. and not necessarily showing all required offsets, details and accessories and equipment to be connected. All work shall be accurately laid out with other Trades to avoid conflicts and to obtain a neat and workmanlike installation which will afford maximum accessibility for operation, maintenance and headroom.

J. Where discrepancies in scope of work as to what Trade provides items, such as starters, disconnects, flow switches, etc., exist, such conflicts shall be reported to the Architect during bidding and prior to signing of the Contract. If such action is not taken, the Electrical Contractor shall furnish such items as part of his work as necessary, for complete and operable systems and equipment, as determined by the Architect.

K. The Electrical Contractor shall coordinate the installation of all equipment and any catwalks or service platforms provided.

L. Where drawing details, plans, specification requirements and/or scheduled equipment capacities are in conflict and where feeders, branch circuits or equipment are shown to be different between plans and/or between plans and riser diagrams, details or specifications, the most stringent requirement will be included in the Contract. Electrical systems and equipment called for in the specification and/or shown on the drawings shall be provided under this Contract as if it were required by both the drawings and specifications. However, prior to ordering or installation of any portion of work which appears to be in conflict, such work shall be brought to Architect's attention for direction as to what is to be provided.

M. Final location of all lighting fixtures, smoke detectors, exit signs, switches, receptacles, fire alarm devices, etc., shall be coordinated with the Architectural reflected ceiling plans, architectural elevations, and/or other Architectural details, as applicable and shall not be scaled from locations indicated on the electrical drawings. Obtain approval of locations of all devices from Architect in the field. The Owner/Architect reserves the right to relocate any receptacle, device, lighting fixture, etc. 10'-0" in any direction prior to installation at no additional cost to the Project.

N. Autoclaves, fume hoods or other type equipment shown on the Electrical and/or Architectural drawings to be provided with services, shall be included under this Contract as applicable, including all conduit and wiring connections to systems, to make equipment complete and operable. Additional wiring, equipment, etc., shall be provided to accomplish the above requirement, as required, all as part of this Contract, at no extra cost to the Owner. This requirement necessitates that the Electrical Contractor review the Architectural drawings and the drawings of other Trades during bidding to ascertain the extent of all requirements, and interface between the Trades and scope of work.

O. **The Electrical Contractor shall coordinate his work with other Trades' work so that all equipment and systems can be easily, safely and properly serviced and maintained. It is imperative that service personnel can safely access all equipment. Provide safety rails, steps, ladders, valve chains, handle extensions, etc. as required, in addition to the ones shown on the drawings, to ensure safe and easy access to all equipment is provided in a manner approved by the Architect.**

P. The HVAC, ATC and Electrical Contractors Scope of Work shall be implemented in accordance with the following matrix:

Device	Furnished By	Installed By	Power Wiring	Control Interlock	Fire Alarm Wiring
Duct Smoke Detectors	Electric	HVAC	Electric	ATC	Electric
Smoke Dampers at AHUs	HVAC	HVAC	N/A	N/A	N/A
Smoke Damper Actuators at AHUs	HVAC	HVAC	N/A	ATC	N/A
Smoke "Control" Dampers (Floor)	HVAC	HVAC	N/A	N/A	N/A
Smoke "Control" Dampers (Floor) Actuators	HVAC	HVAC	ATC	ATC	N/A
Fire Dampers	HVAC	HVAC	N/A	N/A	N/A
Supply and Return Boxes	HVAC	HVAC	See Note (2)	ATC	N/A
Supply and Return Box Damper Actuators	ATC	HVAC	ATC	ATC	ATC
Box DDC Controller	ATC	HVAC	ATC	ATC	N/A
Box and Reheat Coil Valves	ATC	HVAC	N/A	ATC	N/A
Box and Reheat Coil Valve Actuators	ATC	ATC	N/A	ATC	N/A
Supply Reheat Coil	HVAC	HVAC	N/A	N/A	N/A
Control Panels	ATC	ATC	Electric	ATC	N/A
Sheet Metal Dampers	HVAC	HVAC	N/A	ATC	N/A
Sheet Metal Actuators	ATC	ATC	N/A	ATC	N/A
Energy Meters	ATC	HVAC	Electric	ATC	N/A
Flow Measuring Stations	ATC	HVAC	N/A	ATC	N/A
DDC Panels	ATC	ATC	Electric	ATC	ATC
Air Compressors	ATC	ATC	Electric	ATC	N/A
Air Dryers	ATC	ATC	Electric	ATC	N/A
Control Valves	ATC	HVAC	ATC	ATC	N/A
Humidifiers	HVAC	HVAC	N/A	ATC	N/A
Humidifier Valve	HVAC	HVAC	N/A	ATC	N/A
Humidifier Airflow Switch	ATC	ATC	N/A	ATC	N/A
Variable Speed Drives	HVAC	HVAC	Electric	ATC	N/A

Notes:

1. "Electric" refers to the Electrical Contractor/Division 26/Division 28; "HVAC" refers to the HVAC Contractor/Division 23; "ATC" refers to the ATC Subcontractor.

2. The Electrical Contractor shall provide 120 volt power to junction boxes per floor. All 120 volt power and all low voltage wiring from the junction boxes to control panels and devices shall be provided by the ATC Subcontractor.

1.10 GIVING INFORMATION

A. Electrical Contractor shall keep himself fully informed as to the shape, size and position of all openings required for his apparatus and shall give information to the Construction Manager and other Subcontractors sufficiently in advance of the work so that all openings may be built in advance.

1.11 EQUIPMENT AND MATERIALS

A. Equipment and materials shall be delivered to the site and stored in original sealed containers, suitably sheltered from the elements, but readily accessible for inspection by the Architect until installed. All items subject to moisture damage such as controls shall be stored in dry, heated spaces. Equipment such as switchgear with heater elements installed shall have the heater elements energized after the equipment is received by the Electrical Contractor.

B. Equipment shall be tightly covered and protected against dirt, water, and chemical or mechanical injury and theft. At the completion of the work, equipment and materials shall be cleaned and polished thoroughly and turned over to the Owner in a condition satisfactory to the Architect. Damage or defects that develop before acceptance of the work shall be made good at the Electrical Contractor's expense.

C. The Electrical Contractor shall make necessary field measurements to ascertain space requirements, for equipment and connections to be provided under his respective Trade and shall furnish and install such sizes and shapes of equipment to allow for the final installation to conform to the drawings and specifications.

D. Manufacturer's directions shall be followed completely in the delivery, storage, protection and installation. Promptly notify the Architect in writing of any conflict between any requirements of the Contract Documents and the manufacturer's directions. Obtain the Architect's written instructions before proceeding with the work. Should Electrical Contractor perform any work that does not comply with the manufacturer's directions or written instructions from the Architect, he shall bear all costs arising in correcting any deficiencies that should arise.

E. All equipment of one type (such as distribution equipment, cable, wiring devices, fire alarm system, etc.) shall be the products of one manufacturer.

F. Equipment prepurchased by the Construction Manager on behalf of the Owner or by the Owner himself, if assigned to the Electrical Contractor, shall be received, installed, tested, etc., as if the equipment was purchased by the Electrical Contractor. All guarantees, service contracts, etc., shall be the same as for all other equipment provided under this Contract.

1.12 USE OF PREMISES

A. The Electrical Contractor shall confine all apparatus, storage of materials and construction to the limits as directed by the Architect and he shall not encumber the premises with his materials. The Electrical Contractor shall be held responsible for repairs, patching, or cleaning arising from any unauthorized use of premises.

B. Notwithstanding any approvals or instructions which must be obtained by the Electrical Contractor from the Architect in connection with the use of the premises, the responsibility for the safe working conditions at the site shall remain that of the Electrical Contractor. The Architect, Engineer or Owner shall not be deemed to have any responsibility or liability in connection with safe working conditions at the site.

1.13 PROTECTION

A. Materials, conduit, lighting fixtures, switchgear, etc., shall be properly protected during construction and all conduit openings shall be temporarily closed so as to prevent obstruction and damage. Post notice prohibiting the use of all systems provided under the Electrical Contract, prior to completion of work and acceptance of all systems by the Owner except as otherwise, instructed by Architect. Take precautions to protect all materials furnished from damage and theft.

B. The Electrical Contractor shall furnish, place and maintain proper safety guards for the prevention of accidents that might be caused by the workmanship, materials, equipment or electrical systems provided under his Contract.

1.14 DAMAGE TO OTHER WORK

A. The Electrical Contractor shall be held responsible and shall pay for all damages caused by his work to the building structures, equipment, conduits, systems, etc., and all work and finishes installed under this Contract. Repair of such damage shall be done by the Construction Manager at the expense of the Electrical Contractor, to the Architect's satisfaction.

1.15 CORRECTION OF WORK

A. The Electrical Contractor shall promptly correct all work provided under his Contract and rejected by the Architect as defective or as failing to conform to the Contract Documents, whether observed before or after completion of work, and whether or not fabricated, installed or completed.

1.16 EXTRA WORK

A. No claim for extra work will be allowed unless it is authorized by the Architect before commencement of the extra said work.

1.17 TOUCH-UP PAINTING

A. All equipment and systems shall be thoroughly cleaned of rust, splatters and other foreign matter of discoloration leaving every part of all systems in an acceptable prime condition. The Electrical Contractor for the work under his Contract shall refinish and restore to the original condition all equipment which have sustained damage to the

manufacturer's prime and finish coats of paint and/or enamel during the course of construction, regardless of the source of damage.

1.18 PARTS LIST AND INSTRUCTIONS FOR OPERATION AND MAINTENANCE

A. The Electrical Contractor shall thoroughly instruct the Owner, to the complete satisfaction of the Architect, in the proper operation of all systems and equipment provided by him. The Electrical Contractor shall make arrangements, via the Architect, as to whom the instructions are to be given in the operation of the basic and auxiliary systems and the period of time in which they are to be given. The Architect shall be completely satisfied that the Owner has been thoroughly and completely instructed in the proper operation of all systems and equipment before final payment is made. If the Architect determines that complete and thorough instructions have not been given by the Electrical Contractor to the Owner's representative, then the Electrical Contractor shall be directed by the Architect to provide whatever instructions are necessary until the intent of this specification has been complied with.

B. Electrical Contractor shall submit to the Architect for approval, the required typed sets (see General Conditions and Division 01) bound neatly in loose-leaf binders, of all instructions for the installation, operation, emergency operation, start-up, care and maintenance of all equipment and systems (including instructions for the ordering and stocking of spare parts for all equipment installed under this Contract). The lists shall include part numbers and suggested supplier. Each set shall also include an itemized list of component parts that should be kept on hand and where such parts can be purchased.

C. Information shall indicate possible problems with equipment and suggested corrective action. The manuals shall be indexed for each type of equipment. Each section shall be clearly divided from the other sections. A sub-index for each section shall also be provided. The methodology of setting-up the manuals shall be submitted to the Architect and Owner for review prior to final submission of manuals.

D. The instructions shall contain information deemed necessary by the Architect and include but not limited to the following:

1. Introduction

   a. Explanation of Manual and its use.
   b. Summary description of each Electrical system.
   c. Purpose of each system.

2. System

   a. Detailed description of each system.
   b. Illustrations, schematics, block diagrams, catalog cuts, and other exhibits.

3. Operations

   a. Complete detailed, walk-through, with step-by-step, sequential description of all phases of operation for all portions of the systems, including start-up, shutdown, testing and adjusting. Include all posted instruction charts.

4. Maintenance

   a. Parts list and part numbers.
   b. Maintenance, and replacement charts and Electrical Contractor's recommendations for preventive maintenance.
   c. Troubleshooting charts for systems and components.
   d. Instructions for testing each type of part.
   e. Recommended list of on-hand spare parts.
   f. General or miscellaneous maintenance notes.
   g. Provide an estimate of manhours and material costs to perform scheduled preventative maintenance.

5. Manufacturer's Literature

   a. Complete listing for all parts with names, addresses and telephone numbers.
   b. Care and operation.
   c. All and only pertinent brochures, illustrations, drawings, cuts, bulletins, technical data, certified performance charts and other literature with the model actually furnished to be clearly and conspicuously identified.
   d. Internal wiring diagrams and engineering data sheets for all items and/or equipment to be furnished.
   e. Guarantee and warranty data.

1.19 MANUFACTURER'S REPRESENTATIVE

A. The Electrical Contractor shall provide, at the appropriate time or as directed by Architect, the on-site services of a competent factory trained Engineer of the manufacturer of specific equipment, such as the distribution equipment, fire alarm system, lighting system, etc., to inspect, test, adjust and place in proper operating condition any and all items of the same manufacturer. No additional compensation will be allowed for such services. A written report shall be issued by the particular manufacturer with his findings for the Architect's record.

1.20 COORDINATION DRAWINGS

A. Before materials are purchased, fabricated or work is begun, each Subcontractor shall prepare and obtain approval of coordination drawings, and sections for all floors/areas, including buried system/services, resulting in one (1) set of all-Trade-composite at 3/8" scale drawings, showing the size and location of all equipment, in the manner described hereinunder General Requirements. **Architects review and approval of coordination drawings must be obtained prior to any fabrication or installation of any equipment or systems.**

B. The coordination drawings shall be generated from a computer CAD program compatible with AutoCAD Release 2007, in DWG or DXF format. The HVAC Subcontractor shall take the lead, supervise, and coordinate production of coordinated layout drawings, to show and coordinate all equipment. These drawings shall then be circulated to the Electrical Contractor so that he can indicate all his work as directed by

the Construction Manager and Architect and as required, to result in a fully coordinated installation.

C. The Electrical Contractor shall indicate all electrical equipment and conduit provided by him or his Sub-subcontractors on the coordination drawings. This equipment and conduit shall include, but not be limited to, the following:

1. All electrical distribution equipment, drawn to scale with clearance requirements. (Substations, switchboards, transformers, panelboards, etc.)
2. Emergency distribution equipment (transfer switches, etc.).
3. All switchboard and panelboard feeder conduits.
4. All conduits for all systems over 2-1/2" in diameter.
5. Conduit routing and rack locations for all conduits regardless of conduit size when more than 4 conduits are grouped in a rack.
6. All pull and splice boxes over 8" in any direction.
7. MC cable routing and rack locations for all MC cable when more than 4 runs are grouped in a rack.
8. Lighting fixture housings and supports that interfere with other system and furnishings.

D. All costs associated with all aspects of coordination drawings, regardless as to how long they take to produce and how many times they have to be redrawn, shall be borne by the Electrical Contractor.

E. The Electrical Contractor may request the electrical AutoCAD computer drawing files from the Electrical Contract set from the Engineer. The Electrical Contractor will be required to sign a release form and upon receipt of the form, the Engineer will provide files on electronic media within 3-5 business days. The Electrical Contractor will be responsible for verification of dimensions and installation of equipment.

F. The Engineer may provide these files as a courtesy for the Electrical Contractors use. The use of these files will be at the Electrical Contractors risk. The Engineer makes no guarantee as to the completeness or accuracy of the files.

G. The Electrical Contractor shall issue to the HVAC Subcontractor, via diskette, a complete set of equipment installation layout documents in AutoCAD Release 2007 (DWG or DXF) format, for use in developing the required coordination drawings.

H. The Electrical Contractor shall be responsible for coordinating the Electrical AutoCAD coordination drawings, including, but not limited to, the drawing lists, layering system, producing copies of the drawings for the Architect as directed, etc.

1.21 RECORD DRAWINGS/AS-BUILT DRAWINGS

A. The Electrical Contractor shall maintain current at the site a set of his drawings on which he shall accurately show the actual installation of all work provided under his Contract indicating hereon any variation from the Contract Drawings, in accordance with the General Conditions and Division 01. Changes, whether resulting from formal change orders or other instructions issued by the Architect, shall be recorded. Include

changes in sizes, location, and dimensions of conduit, switchgear, lighting fixtures, fire alarm equipment, wiring devices, etc.

B. The Electrical Contractor shall indicate progress by coloring-in various conduits, equipment and associated appurtenances exactly as they are erected. This process shall incorporate both the changes noted above and all other deviations from the original drawings whether resulting from job conditions encountered or from any other causes.

C. The marked-up and colored-up prints will be used as a guide for determining the progress of the work installed. They shall be inspected periodically by the Architect and Owner and they shall be corrected immediately if found either inaccurate or incomplete. This procedure is mandatory.

D. At the completion of the job, these prints shall be submitted to the Construction Manager and then to the Architect for final review and comment. The prints will be returned with appropriate comments and recommendations. These corrected prints, together with corrected prints indicating all the revisions, additions and deletions of work, shall form the basis for preparing a set of As-built Record Drawings.

E. The Subcontractor shall be responsible for generating as-built Record Drawings utilizing CAD based documents in AutoCAD Release 2007 DWG or DXF format. A bound set of plans, as well as the computer files, on disk, shall be turned over to the Architect for review. After acceptance of the as-built documents by the Architect, the Electrical Contractor shall make any corrections necessary to the as-built documents and prepare one reproducible set of drawings as well as bound blueprint set(s) (quantity as determined by the Architect) for distribution to the Owner via the Architect.

F. The Electrical Contractor may use the computer drawing files used for coordination drawings or may request the Engineers most recently updated computer drawing files. The Engineer may provide these files as a courtesy for the Electrical Contractors use, however the updated drawings may not include all changes made during the course of construction. It shall be the Electrical Contractors responsibility to update the as-built documents to include all changes brought forth to the project resulting from bulletins, request for information (RFI's), change orders, etc. The Electrical Contractor may review the Engineers latest computer files for completeness prior to use, however the Engineer will not be responsible for updating the computer files. The use of these files will be at the Electrical Contractors risk.

G. Included with the above shall be a complete drawing list and a standard layering system, which shall be required to be maintained within the as-built Record CAD documents.

H. The Subcontractor shall be issued bulletins in the same manner as the original Design Documents described above.

I. The as-built CAD documents required shall be in addition to other requirements stated elsewhere.

1.22 SUBMITTALS

A. Prepare and submit shop drawings in accordance with the requirements hereinbefore specified, and with Section 01 3300 – Submittal Procedures in the manner described therein, modified as noted hereinafter.

B. Electronic Submittals

1. If the Electrical Contractor chooses to provide electronic submittals, in addition to the requirements in Section 01 3300 for electronic submittals, for each submittal and resubmittal, the Electrical Contractor shall deliver to the Architect a minimum of two (2) complete hard copy (paper) submittals and resubmittals for use by the Engineer. These hardcopies shall remain the property of the Architect and Engineer and submittal review comments shall be returned in electronic format.

C. All shop drawings shall have clearly marked the appropriate specification number of drawing designation, for identification of the submittal.

D. Disposition of shop drawings shall not relieve the Electrical Contractor from the responsibility for deviations from drawing or specifications, unless he has submitted in writing a letter itemizing or calling attention to such deviations at time of submission and secured written approval from the Engineer, nor shall such disposition of shop drawings relieve the Electrical Contractor from responsibility for errors in shop drawings or schedules.

E. Specifications Compliance Statement

1. The manufacturer shall submit a point by point statement of compliance with the specifications.
2. The statement of compliance shall consist of a list of all paragraphs (line by line).
3. Where the proposed system complies fully, such shall be indicated by placing the word “comply” opposite the paragraph number.
4. Where the proposed system does not comply, or accomplishes the stated function in a manner different from that described, a full description of the deviation shall be provided.
5. Where a full description of a deviation is not provided, it shall be assumed that the proposed system does not comply with the paragraph in question.
6. Submissions which do not include a point by point statement of compliance as specified shall be disqualified.

1.23 EQUIPMENT ALLOWANCES

A. In addition to all equipment indicated on the electrical drawings, the Electrical Contractor shall carry allowances to furnish and install the following equipment in locations to be determined. It shall be assumed that the devices indicated below will be installed prior to installation of GWB walls or finished ceilings:

1. (25) 1-pole switches including conduit and wire with an average length of 30'-0" connected to the normal electrical distribution system.

2. (6) 1-pole switches including conduit and wire with an average length of 30'-0" connected to the emergency electrical distribution system.

3. (50) Duplex receptacles including conduit and wire with an average length of 30'-0" connected to the normal electrical distribution system.

B. Lighting fixtures:

1. (12) Additional Type Exit signs including conduit and wire with an average length of 10'-0".

C. Fire Alarm Devices:

1. (4) Pull stations including conduit and wire with an average length of 20'-0".

2. (12) ADA compliant audio/visual devices including conduit and wire with an average length of 20'-0".

3. (6) Zone addressable modules for peripheral devices such as flow switches, etc. including conduit and wire with an average length of 20'-0".

1.24 EQUIPMENT AND BRANCH CIRCUITING DESIGN CRITERIA

A. Site Lighting

1. Site lighting shall be controlled by a low voltage lighting control system utilizing photocells, timeclock, and low voltage relays.

2. Site lighting fixtures mounted below 22'-0" above finish grade shall be wired at 277 volts and limited to 2,500 watts per 20 ampere, single-pole circuit.

3. Site lighting fixtures mounted over 22'-0" above finish grade shall be wired at 480 volts, single phase and limited to 4,400 watts per 20 ampere, 2-pole circuit.

4. Minimum wire size shall be #10 AWG. Circuit runs exceeding 175'-0" use #8 AWG. Circuit runs exceeding 250'-0" use #6 AWG. Circuit runs exceeding 400'-0" use #4 AWG.

B. General Lighting

1. 120 volt lighting shall be limited to 1,200 watts per 20 ampere, single-pole circuit.

2. 277 volt lighting branch circuits shall be limited to 3,200 watts per 20 ampere, single-pole circuit.

3. Switch control shall be provided for each room, and multiple switch controls (minimum [2] switches) for rooms over 500 sq. ft., whether indicated on the drawings or not.

4. Exit signs shall be circuited to the life safety panel.

5. Emergency egress lighting shall be provided throughout the building to illuminate all egress corridors, stairwells, lobbies, etc. Branch circuits shall originate from the life safety panel and shall be constant "on" with **no** toggle switch control. Areas requiring switch control of egress lighting shall be provided with bypass relays mounted as an integral part of the lighting fixture. Emergency branch circuit conductors shall be run in separate dedicated conduits, with no other wiring.

C. Receptacle Branch Circuit Criteria

1. Convenience receptacles for general use, such as Office Areas, Lounges, Lobbies, etc., will have a maximum of six (6) duplex receptacles per 20 ampere, single-pole circuit.

2. All duplex and special purpose receptacles indicated for specific equipment will be on a dedicated circuit.

3. Receptacles in laboratories shall have a maximum of four (4) duplex receptacles on a 20 ampere, single pole circuit, 120 volt. Laboratory benches will be provided with surface metal raceway with receptacles on 24 inch centers with a minimum of two (2) 20 ampree, single-pole circuits. Each laboratory module will have at least one (1) receptacle on emergency power.

4. Each fume hood will be provided with a minimum of two (2) 20 ampere, single-pole circuits.

5. Duplex receptacles dedicated for equipment, such as refrigerators, freezers, etc., that require emergency service, will be wired to the optional stand-by branch of the emergency system.

D. Motors

1. All motors 1/8 HP and under shall be maximum wired three (3) per 20 ampere, single-pole circuit, 120 volt.

2. All motors above 1/8 HP shall be served from an individual branch circuit.

3. Refer to HVAC and Plumbing drawings for location and ratings of motors.

4. All motors 1/2 HP and above shall be 480 volt, 3 phase and be on individual circuits.

5. All motors 60 HP and above shall have reduced voltage, autotransformer type starters.

6. Selected motors shall have variable frequency drive (VFD) units furnished by the HVAC Contractor. The Electrical Contractor shall coordinate with the HVAC

Contractor and provide a disconnecting means and overcurrent device sized to serve each VFD unit.

E. Panelboards

1. Provide in each panel 10% spare breakers and 10% spaces for future breakers in addition to the active breakers.

PART 2 – PRODUCTS

2.1 NOT USED

PART 3 - EXECUTION

3.1 COOPERATION AND WORK PROGRESS

A. The Electrical work shall be carried on under the usual construction conditions, in conjunction with all other work at the site. The Electrical Contractor shall cooperate with the Architect, Construction Manager, all other Subcontractors and equipment suppliers working at the site. The Electrical Contractor shall coordinate the work and proceed in a manner so as not to delay the progress of the project.

B. The Electrical Contractor shall coordinate his work with the progress of the building and other Trades so that he will complete his work as soon as conditions permit and such that interruptions of the building functions will be at a minimum. Any overtime hours worked or additional costs incurred due to lack of or improper coordination with other Trades or the Owner by the Electrical Contractor, shall be assumed by him without any additional cost to the Owner.

C. The Electrical Contractor shall furnish information on all equipment that is furnished under this Section but installed under another Section to the installing Subcontractor as specified herein.

D. The Electrical Contractor shall provide all materials, equipment and workmanship to provide for adequate protection of all electrical equipment during the course of construction of the project. This shall also include protection from moisture and all foreign matter. The Electrical Contractor shall also be responsible for damage which he causes to the work of other Trades, and he shall remedy such injury at his own expense.

E. Waste materials shall be removed promptly from the premises. All material and equipment stored on the premises shall be kept in a neat and orderly fashion. Material or equipment shall not be stored where exposed to the weather. The Electrical Contractor shall be responsible for the security, safekeeping and damages, including acts of vandalism, of all material and equipment stored at the job site.

F. The Electrical Contractor shall be responsible for unloading all electrical equipment and materials delivered to the site. This shall also include all large and heavy items or equipment which require hoisting. Consult with the Construction Manager for

hoisting/crane requirements. During construction of the building, the Electrical Contractor shall provide additional protection against moisture, dust accumulation and physical damage of the main service and distribution equipment. This shall include furnishing and installing temporary heaters within these units, as approved, to evaporate excessive moisture and ventilate it from the room, as may be required.

G. It shall be the responsibility of the Electrical Contractor to coordinate the delivery of the electrical equipment to the project prior to the time installation of equipment will be required; but he shall also make sure such equipment is not delivered too far in advance of such required installation, to ensure that possible damage and deterioration of such equipment will not occur. Such equipment stored for an excessively long period of time (as determined in the opinion of the Architect) on the project site prior to installation may be subject to rejection by the Architect.

H. The Electrical Contractor shall erect and maintain, at all times, necessary safeguards for the protection of life and property of the Owner, Workmen, Staff and the Public.

I. Prior to installation, the Electrical Contractor has the responsibility to coordinate the exact mounting arrangement and location of electrical equipment to allow proper space requirements as indicated in the NEC. Particular attention shall be given in the field to group installations. If it is questionable that sufficient space, conflict with the work of other Subcontractors, architectural or structural obstructions will result in an arrangement which will prevent proper access, operation or maintenance of the indicated equipment, the Electrical Contractor shall immediately notify the Contractor and not proceed with this part of the Contract work until definite instructions have been given to him by the Architect.

J. The Electrical Contractor shall not allow any equipment or piping foreign to the electrical installation to be installed or pass through any room in which electrical systems or equipment are located, such as electric rooms, electric closets, telephone or data closets. The Electrical Contractor shall notify the Contractor of such violations and request immediate removal.

K. The Electrical Contractor shall obtain from the Plumbing and HVAC Subcontractors copies of all shop drawing prints showing the ductwork and piping installation as they will be put in place on the project. These drawings shall be thoroughly checked by the Electrical Contractor and the routing of all conduits and installation of all outlets and electrical equipment shall be coordinated with the ductwork and piping so as to prevent any installation conflict. Such coordination shall be done prior to roughing in conduits, outlets and electrical equipment.

L. Location of all wall outlets shall be verified with the Architect prior to roughing in conduits. Refer to details and wall elevations on the Architectural drawings. Mounting heights indicated on these drawings and/or specific dimensional information given to the Electrical Contractor by the Architect shall take precedence over such information indicated on the Electrical drawings.

M. Refer to all other drawings associated with this project. Any and all equipment which require an electrical supply circuit, switch, controls or connections, whether indicated on the Electrical drawings or not, shall be furnished and installed as directed by the

Architect. Locations of lighting fixtures shall conform to the Architectural reflected ceiling plans.

N. Refer to the Architectural drawings for areas in which the concrete slab is poured on grade. In these areas a waterproofing membrane will be installed on the grade fill or earth prior to pouring of slab. Electrical conduits shall be installed to avoid the necessity of penetrating this waterproofing membrane. Penetration of the membrane, if required, shall only be made when specifically allowed by the Architect, and shall be made only at locations directed by the Architect.

3.2 INSTALLATION

A. General

1. Unless specifically noted or indicated otherwise, all equipment and material specified in Division 26 of this specification or indicated on the drawings shall be installed under this Contract whether or not specifically itemized herein. This Section covers particular installation methods and requirements peculiar to certain items and classes or material and equipment.

2. The Electrical Contractor shall obtain detailed information from manufacturers of equipment as to proper methods of installation.

3. The Electrical Contractor shall obtain final roughing dimensions and other information as needed for complete installation of items furnished under other Sections or furnished by the Owner.

4. The Electrical Contractor shall keep fully informed of size, shape and position of openings required for material and equipment provided under this and other Sections. Ensure that openings required for work of this Section are coordinated with work of other Sections. Provide cutting and patching as necessary.

5. The Electrical Contractor shall coordinate the electric service installation with the Owner, Telephone Company, the City Building Department and the City Fire Department.

6. All miscellaneous hardware and support accessories, including support rods, nuts, bolts, screws and other such items, shall be of a galvanized or cadmium plated finish or of another approved rust-inhibiting coating.

7. Throughout this Section where reference is made to steel channel supports, it shall be understood to mean that the minimum size shall be 1 5/8" mild strip steel with minimum wall thickness of 0.105", similar to Unistrut P1000 or equal products manufactured by Kindorf or Husky Products Co.

3.3 MATERIALS AND WORKMANSHIP

A. All materials and equipment shall be new and unused and shall meet requirements of the latest Standards of NEMA, UL, IPCEA, ANSI and IEEE. Equipment shall have

components required or recommended by OSHA, applicable NFPA documents and shall be UL listed and labeled.

B. Despite references in the specifications or on the drawings to materials or pieces of equipment by name, make or catalog number, such references shall be interpreted as establishing standards of quality for materials and performance.

C. Finish of materials, components and equipment shall not be less than Industry good practice. When material or equipment is visible or subject to corrosive or atmospheric conditions, the finish shall be as approved by the Architect.

D. Provide proper access to material or equipment that requires inspection, replacement, repair or service. If proper access cannot be provided, confer with the Architect as to the best method of approach to minimize effects of reduced access.

E. All work shall be installed in a neat and workmanlike manner and shall be done in accordance with all Local and State Codes.

F. The Owner will not be responsible for material, equipment or the installation of same before testing and acceptance.

3.4 CLEANING

A. This Section of the specifications shall include the cleaning of all equipment on a day-to-day basis and final cleaning of all electrical equipment prior to turning building over to the Owner. All necessary cleaning referred to herein shall be cleaned to the satisfaction of the Architect.

B. Electrical Distribution Equipment

1. All electrical distribution equipment shall be completely cleaned and dried inside and out prior to initial energizing.

2. Cleaning shall consist of vacuuming all busses, windings, enclosures (inside and out), etc. After vacuuming is complete, all equipment shall be wiped down. If equipment is wet or contains moisture, it shall be thoroughly dried and inspected by the manufacturer's representative before energizing.

C. Raceways and Junction Boxes

1. All raceways and junction boxes shall be blown out and dried prior to installation of feeder conductors and branch circuit conductors.

D. Low Tension Systems

1. All cabinets and panels for low tension systems shall be thoroughly cleaned and dried prior to system start-up.

E. Electric

1. Upon completion of cleaning electrical equipment as described in Paragraph B. above, but before energizing equipment, the entire room shall be swept clean and material storage and garbage shall be removed from the room. At this time, equipment may be energized.

2. Once equipment and room are cleaned and energized, the area shall remain clean and doors shall remain closed and locked until completion of job. Electric rooms shall not be used to store material after equipment is energized. If rooms and equipment are subject to dust and moisture after energizing equipment, the equipment shall be de-energized and recleaned to the same specifications.

F. Final Cleaning

1. All lighting fixtures, devices, device plates, etc., shall be cleaned and left in "like new" condition to the satisfaction of the Architect, prior to occupancy.

2. All rubbish and discarded materials shall be disposed of and removed from the site on a day-to-day basis.

3. All equipment, whether part of the Electrical Contractor's Contract or not, which must be cleaned due to the Electrical Contractor's work, shall be cleaned by the Electrical Contractor to the satisfaction of the Architect.

3.5 FINAL INSPECTION

A. When all Electrical work on the project has been completed and is ready for final inspection, such an inspection shall be made. At this time, and in addition to all other requirements in the Contract Documents, the Electrical Contractor, for the work under this Contract, shall demonstrate that the requirements of these specifications have been met to the Architect's satisfaction.

END OF SECTION

SECTION 26 0520 – BASIC MATERIALS AND METHODS

PART 1 - GENERAL

1.1 RELATED DOCUMENTS

A. All of the Contract Documents, as listed on the Table of Contents and including General and Supplementary Conditions and Division 01, General Requirements, shall be included in, and made part of, this Section.

1.2 DESCRIPTION OF WORK

A. The following general systems and equipment shall be provided, as a minimum, but not necessarily limited to the following:

1. Grounding.

2. Connections to HVAC, Plumbing, Fire Protection, Automatic Temperature Control, Construction Manager and Owner furnished equipment.

3. 120 volt power for remote alarms and connections to oil tank alarms, etc.

4. Testing, cleaning and adjusting.

5. Fees, permits, royalties, guarantees.

6. Firestopping, smokeproofing, waterproofing.

7. Shop drawings.

8. Access doors.

9. Electrical Identification

10. Hangers and supports.

11. Mechanical suspension channel.

12. Wireways.

1.3 RELATED WORK

A. For work to be included as part of this Section, to be furnished and installed by the Electrical Contractor, refer to the Related Work section of Specification Section 26 0510.

B. Carefully examine all of the Contract Documents, criteria sheets and all other Sections of the specifications for requirements which affect work under this Section, whether or not such work is specifically mentioned in this Section.

1.4 WARRANTY

A. Attention is directed to provisions of the General Requirements, Supplementary General Requirements and Section 26 0510 regarding guarantees and warranties for work under this Contract.

1.5 FIRESTOPPING AND SMOKESTOPPING

A. Attention is directed to the provisions of Section 07 8000 regarding firestopping and smokeproofing for work under this Contract. The Electrical Contractor shall review the requirements and coordinate the system installation.

B. Where conduits pass through masonry or concrete walls or floors, the Electrical Contractor shall provide and set individual sleeves for each conduit and all other work under his charge, as necessary for passage of all raceways. Sleeves shall be of sufficient size to provide 1/2" air space around the conduit passing through the floor or walls. All openings shall be sealed, smokestopped and made tight. The Electrical Contractor shall be responsible for the exact location of sleeves provided under this Contract and shall coordinate all requirements for conduit sleeves.

C. Except as otherwise specified, underground piping passing through exterior walls, foundation slabs on grade, or manhole walls, shall have penetration closures of the modular mechanical type, consisting of interlocking synthetic rubber links shaped to continuously fill the annular space between the conduit and wall opening. Links shall be loosely assembled with bolts to form a continuous belt around the conduit and with a pressure plate under each bolt head and nut. After the seal assembly is positioned in the sleeve, tightening of the bolts shall cause the rubber sealing elements to expand and provide an absolutely watertight seal between the conduit and wall, reducing chances of cathodic reaction between these members.

D. The Electrical Contractor for work under his charge shall determine the required inside diameter of each individual wall opening or sleeve before ordering, fabrication or installation. The inside diameter of the wall opening shall be sized to fit the conduit and ensure a watertight joint. Where applicable, when installing seals, take into account the conduit O.D. if non-standard due to coating or jacketing.

1.6 WATERPROOFING AND COUNTERFLASHING

A. Attention is directed to the provisions of Section 07 6000 regarding flashing and counterflashing for work under this Contract. The Electrical Contractor shall review the requirements and coordinate the system installation.

B. Electrical Contractor shall provide all counterflashing of all conduit and equipment provided by him, which pierce roofs, walls and other weatherbarrier surfaces.

C. All work shall be performed in a workmanlike manner to assure weatherproof installation. Any leaks developed due to Electrical Contractor's work shall be repaired at his expense, to Architect's satisfaction.

D. Conduit passing through slabs shall have the sleeve extended above floors as hereinafter specified to retain any water and the space between the conduit and sleeve caulked with lead wool.

1.7 MISCELLANEOUS IRON AND STEEL

A. Attention is directed to the provisions of Section 05 4500 regarding miscellaneous iron and steel supports for work under this Contract. The Electrical Contractor shall review the requirements and coordinate the system installation.

B. Except where specifically indicated for the Construction Manager to provide supports, Electrical Contractor shall provide all steel supports and hangers required to support all equipment or materials provided under this Contract.

C. All supports shall be cut, assembled, welded and finished by skilled mechanics. Welds shall be ground smooth. Stands, brackets and framework shall be properly sized and strongly constructed.

D. Measurements shall be taken on the job and worked out to suit adjoining and connecting work. All work shall be performed by experienced metal-working mechanics. Members shall be straight and true and accurately fitted.

1.8 SUBMITTALS

A. Prepare and submit shop drawings in accordance with the requirements hereinbefore specified, and with Section 01 3300 – Submittal Procedures in the manner described therein, modified as noted hereinafter.

B. All shop drawings shall have clearly marked the appropriate specification number of drawing designation, for identification of the submittal.

C. Disposition of shop drawings shall not relieve the Electrical Contractor from the responsibility for deviations from drawing or specifications, unless he has submitted in writing a letter itemizing or calling attention to such deviations at time of submission and secured written approval from the Engineer, nor shall such disposition of shop drawings relieve the Electrical Contractor from responsibility for errors in shop drawings or schedules.

D. Shop drawings shall include, but shall not be limited to, the following:

1. Access doors.
2. Electrical Identification
3. Hangers and supports.
4. Mechanical suspension channel.
5. Wireways.

PART 2 - PRODUCTS

2.1 ACCESS DOORS

A. Attention is directed to the provisions of Section 08 3100 regarding access doors required for work under this Contract. The Electrical Contractor shall review the requirements and coordinate the system installation.

B. Furnish, for installation by the designated Trade as determined by the Construction Manager, all access doors in locations wherever pull or junction boxes, "LB" fittings, equipment, etc., are installed behind gypsum wallboard or masonry walls or ceilings and where such devices would be inaccessible for inspection, maintenance or servicing. Access doors shall be a minimum of 12" by 12" and shall be sized to suit the access requirement to service the equipment and located in a manner approved by the Architect and to meet requirements specified here and elsewhere, for specific applications.

C. Doors shall be set square and flush in cooperation with the designated Subcontractors performing the work. Particular attention shall be exercised in the selection of doors for masonry walls in order that frame sizes used will match the courses of brick or block. All access panels shall be located in closets, storage rooms and/or other non-public areas where possible, positioned so that the junction can be easily reached and shall be constructed in a workmanlike manner. When access panels are required in corridors, lobbies or other habitable areas, they shall be located as directed by Architect.

D. Access panels shall be flush type with 14 gauge panels and 16 gauge frames, minimum, unless otherwise noted. Each access panel shall be furnished complete with continuous piano hinge and flush screwdriver operated cam latch, with factory applied prime finish. Access panels shall be as manufactured by Inryco/Milcor, Karp Associates Inc., Birmingham Ornamental Iron Co., Miami-Carey, Babcock-Davis or equal approved by the Architect.

E. Access panels shall be installed in gypsum wallboard ceilings only where specifically approved by the Architect. Where possible, all access requirements for raceways and equipment shall be beyond the gypsum wallboard ceilings.

F. Access panels shall be specifically designed for each type of wall, ceiling finish and construction with which they are used, as follows:

1. Suspended latch and gypsum wallboard ceilings: Style K with 16 gauge frame, 14 gauge panel and flush screwdriver operated camlocks.

2. Masonry rated walls: Style M with 16 gauge frame, 14 gauge panel and flush screwdriver operated camlocks.

3. Masonry fire rated walls and at shafts: Fire rated with UL, 1.5-hour "B" rating, 16 gauge frame, 20 gauge sandwich type insulated panel, self-latching lock having interior release mechanism, and flush screwdriver operated camlocks.

4. Where installed at fire rated walls or ceilings, access panels shall be of fire-resistive construction with mineral core panel faced both sides and edges with 20 gauge sheet steel, and shall bear the UL label required to meet the fire rating of the wall.

5. Where installed in surfaces finished with ceramic tile or glazed coatings, access panels shall be of stainless steel with No. 4 finish.

6. Where installed in acoustical ceilings, access panels shall be of type which will accept adhesive mounted acoustical panels flush with surrounding surfaces (acoustical panels to be provided by Acoustical Ceiling Trade).

7. Where installed in gypsum wallboard walls or ceilings, access panels shall be of type with 14 gauge face panels and 16 gauge frames equipped with integral perforated, textured metal casing bead edge which will receive drywall compound for flush finishing. (Compound finishing shall be provided by Gypsum Drywall Trade.)

2.2 ELECTRICAL IDENTIFICATION

A. Nameplates

1. Provide nameplates on all equipment furnished under this contract including switchgear, automatic transfer switches, transformers, busway, remote mounted enclosed circuit breakers, receptacles (see Wiring Device Section), panelboards, motor disconnect switches, remote control stations, starters, etc.

2. The following information shall be provided on custom engraved nameplates unless clearly identified on the nameplates provided by the factory:

a. Switchgear and service entrance equipment:

1) Equipment designation
2) Voltage
3) Phase
4) Phase bus amperage
5) Neutral bus amperage (if provided)
6) Ground bus amperage
7) Maximum available fault current as determined by the final approved power system study, including date fault current calculation was performed.

b. Switchboards and distribution panels:

1) Equipment designation
2) Voltage
3) Phase
4) Phase bus amperage
5) Neutral bus amperage (if provided)
6) Ground bus amperage
7) Source of power

c. Busway (on each floor):

1) Equipment designation

2) Voltage
3) Phase
4) Amperage
5) Source of power

d. Panelboards:

1) Equipment designation
2) Voltage
3) Phase
4) Amperage
5) Source of power

e. Transformers:

1) Equipment designation
2) Primary voltage
3) Secondary voltage
4) Phase
5) Impedance
6) Source of primary power
7) Source fed by secondary

f. Automatic transfer switches:

1) Equipment designation
2) Voltage
3) Phase
4) Phase bus amperage
5) Neutral bus amperage (if provided)
6) Ground bus amperage
7) Source of normal power
8) Source of standby power

g. Enclosed circuit breakers, disconnect switches, motor starters, controllers, etc.:

1) Equipment designation
2) Voltage
3) Phase
4) Amperage
5) Source of power
6) System or equipment served

3. Nameplates for equipment shall be laminated, bakelite nameplates with engraved letters at least ¼" high. Nameplates shall be securely attached to the equipment with galvanized screws. Adhesives or cements shall not be used.

4. Nameplate colors shall be as follows:

a. Normal Power System: Black background, white letters
b. Emergency power system: Red background, white letters
c. Optional Standby power system: Blue background, white letters

5. A list of nameplates shall be submitted to the Architect for approval prior to fabrication.

B. Directories

1. Equipment that serves multiple panels and/or loads, such as panelboards shall have type written directories listing all circuit loads, breaker sizes and phases.

C. Flash Protection Boundaries and Incident Energy Exposures Labeling

1. Provide field labeling of electrical equipment that is likely to require examination, adjustment, servicing or maintenance while energized. Labeling shall be provided in accordance with the following codes and standards:

a. National Fire Protection Association

1) NFPA 70 – National Electrical Code
2) NFPA 70E - Standard for Electrical Safety Requirements for Employee Workplaces

b. IEEE Std 1584-2002 & IEEE Std 1584a-2004 - Guide for Performing Arc-Flash Hazard Calculations
c. Underwriters Laboratories (UL) Factory Mutual (FM)
d. Occupational Safety and Health Administration (OSHA) – 1910.333
e. American National Standards Institute (ANSI)
f. American Society of Testing Materials (ASTM)
g. National Electrical Manufacturers Association (NEMA)

2. Flash protection boundaries and incident energy exposures field labeling shall warn persons of potential electric arc flash hazards and include as a minimum, specific to the equipment, the following information:

a. Warning of arc flash hazard
b. Requirement that only qualified personnel access equipment
c. Flash protection boundary limit
d. Incident energy exposure available
e. Date of installation
f. Statement that system changes occurring subsequent to the installation may affect the level of hazard involved and that additional electrical system review may be required to confirm level of hazard has not changed

3. Field labeling shall be applied to all electrical equipment including but not necessarily limited to:

a. Substation and switchboard assemblies
b. Panelboards
c. Disconnect switches
d. Controller equipment such as variable frequency/adjustable speed drives
e. Fuses and circuit breakers
f. Rotating equipment
g. Batteries
h. Automatic transfer switches
i. Premises wiring

4. Field labeling shall be clearly visible to qualified persons before examination, adjustment, servicing, or maintenance of the equipment is performed. Field labeling shall conform to the requirements of ANSI Z535.4-2007, *American National Standard for Product Safety Signs and Labels*, provides guidelines for the design of safety signs

D. Wire Markers

1. Markers for wire and cable circuits shall, be as manufactured by, Brady self-laminating vinyl Datab labels.

E. Cable Tags

1. Cable tags shall be brass identification tags with plastic tie wrap.

F. Low Voltage Raceway Identification

1. Provide manufacturer's standard pre-printed, flexible or semi-rigid, permanent, plastic-sheet conduit markers, extending 360° around conduits; designed for attachment to conduit by adhesive, adhesive lap joint of marker, matching adhesive plastic tape at each end of marker, or pretensioned snap-on. Except as otherwise indicated, provide lettering which indicates voltage of conductor(s) in conduit. Provide minimum 8" length for 2" and smaller conduit, 12" length for larger conduit.

2. Color coding for all raceways shall match the Owners color coding. If no color coding exists, paint raceways as indicated below. Spacing of paint markings shall be a maximum of 10’-0″ on centers for entire length of conduit. Painted conduit connectors and junction boxes will be an acceptable means of conduit identification, provided there is a painted connector/box a maximum of 10’-0” on center.

a.	Emergency system	Orange
b.	Optional-standby	Yellow
c.	Fire alarm system	Red
d.	Telecommunication System	Blue
e.	Other low voltage systems	Brown

G. Medium Voltage Raceway Identification

1. Where medium voltage raceways run within the interior of the building, including medium voltage raceways that are run in an inaccessible shaft, the raceway shall have “DANGER HIGH VOLTAGE” painted in red paint with 2” tall letters, a maximum of 10’-0” on center

H. Color-Code Tape

1. Colored tape shall be polyvinyl chloride, self-adhesive not less than 3 mils thick and 1 1/2" wide, suitable for use on 90°C conductors, UL listed and shall be furnished in colors as specified herein.

2.3 HANGERS AND SUPPORTS

A. General

1. Hangers, supports, clamps, etc., shall be provided as required for all electrical equipment, including but not limited to, lighting fixtures, junction boxes, pull boxes, conduit, cable tray, busway, trapeze mounted transformers, open plenum type cabling, etc.

2. The Electrical Contractor shall provide all labor, materials, equipment and incidentals required for hangers and supports for all electrical equipment including concrete inserts, anchor bolts, metallic hanging and supporting devices, etc. for supporting electrical equipment.

3. Hangers and supports shall be approved standard design, 1-5/8” and shall be adequate to maintain the supported load in proper position and alignment under all operating conditions. All supports shall be designed to adequately secure the equipment against excessive dislocation due to thermal expansion and contraction and all probable external forces such as equipment, conduit and personnel contact.

4. All electrical equipment shall be supported in such a manner as to prevent any strain being imposed on the equipment supported.

5. All material used in manufacturing hangers and supports shall be capable of meeting the respective ASTM Standard Specifications with regards to tests and physical and chemical properties, and be in accordance with MSS SP-58.

6. Hangers and supports shall be spaced in accordance with MSS SP-69 Table 3.

7. Hangers and supports shall be as manufactured the following manufactures. Product numbers used herein are based on B-Line Systems , Inc.

a. B-Line Systems, Inc.
b. Caddy/Eristrut
c. Unistrut
d. Power-Strut
e. Cope
f. Thomas and Betts – Super Strut

B. Hangers

1. All hangers and supports shall have some form of adjustment available after installation. Hanger material shall be compatible with the conduit material.

2. Hangers for conduit 4” and smaller shall be B-Line series BL1400.

C. Hanger Rods

1. Hanger rods shall be B-Line series ATR (All Threaded Rod) or series B3205 with threaded at ends with allowance for adjustments. Wire and strap hangers will not be permitted. All electrical equipment shall be supported by rods, hangers, etc., using bolts.

2. Hanger rods shall be subjected to tension only. Lateral and axial movements shall be accommodated by proper linkage in the rod assembly.

3. Hanger rod diameters shall be based on MSS SP-69 Table 4.

D. Beam Clamps

1. All beam clamps shall be concentric loaded type clamps which engage both edges of the beam flange. The hanger shall be located directly below the web of the beam. Consult with Structural Engineer to ascertain maximum loading on hanger in each area.

2. Beam clamps shall be B-Line series B3054, B3055 or B3291 through B3297.

E. Concrete Inserts

1. Concrete inserts for hangers shall be continuous metal or spot inserts designed to be used in ceilings, walls or floors and shall be as follows:

a. Continuous concrete inserts shall be used where applicable for hanger rod sizes up to 3/4” diameter. Inserts may be used where supports are parallel to the main slab reinforcement and shall be B-Line series B22I, B32I or B52I.

b. Spot concrete inserts shall be used where applicable for hanger rod sizes up to and including 7/8” diameter. Inserts shall be B-Line series B2505 through B2508, B2500, B2501 or B3014.

F. Welded Steel Brackets

1. Wall or column supported conduits shall be supported by welded steel brackets B-Line series B3064 or B3066.

G. Stanchions

1. For floor supported equipment, such as safety switches in mechanical areas, provide either cast-in-place concrete supports or field installed supports. Each support shall be screwed or welded to the corresponding size base stand. Supporting pipe shall be of schedule 40 steel pipe construction. Each base stand shall be secured to the concrete floor by expansion bolts. Base stands shall be B-Line series B3088 or B3088T.

H. Riser Conduits

1. Riser conduits shall be supported independently from of any horizontal conduits.

2. Support all vertical runs of conduits at each floor with B-Line series B3373 or B3373CT as required.

I. Strut Channel

1. Strut channel trapeze hangers shall be used to support parallel conduit runs. Conduit racks or stanchions fabricated with strut channel shall be used in areas with multiple conduit runs. Strut clamps and straps shall be used to maintain proper alignment. Strut shall be a minimum of 1 5/8” wide x 1 5/8” deep, B-Line series B22 or heavier as required. Clamps and straps shall be B-Line series B2000 suitable for the conduit material (EMT, IMC or RGS).

2. Provide strut channel above ceilings for support of electrical equipment such as lighting fixtures where mechanical equipment and ductwork interfere with direct mounting methods. Strut shall be used to span the width of the interference and supported by rods on each end.

3. Provide all required appurtenances required to properly hang and assemble strut supports.

2.4 MECHANICAL SUSPENSION CHANNEL

A. Mechanical suspension channel shall be furnished and installed to support electrical equipment, (panelboards, disconnect switches, starters, transfer switches, transformers, etc.) independent of walls. Where walls back up to occupied spaces, the suspension channels shall be at least 1/2" clear of the wall and shall not be connected or braced to the wall.

B. Channel shall be Unistrut, Type P3000 or approved equal. All fasteners and fittings shall be supplied to provide a complete installation as required. Channel shall be sized and mounted to allow for future conduits.

C. All channel and fittings shall be furnished with the manufacturer's standard rustproofed finish.

D. Channel shall be manufactured by one of the following:

1. B-Line Systems, Inc.
2. Caddy/Eristrut

3. Unistrut
4. Power-Strut
5. Cope
6. Thomas & Betts – Kindorf

2.5 WIREWAYS

A. Furnish and install wireways as required and/or as indicated on the drawings. Wireways in electric rooms shall be minimum 6” x 6”, mounted a minimum of 6’-6” above finished floor. Wireway covers shall be completely removable.

B. Wireways shall be as manufactured by Cutler Hammer, General Electric Square D or Siemens.

PART 3 - EXECUTION

3.1 COOPERATION AND WORK PROGRESS

A. The Electrical work shall be carried on under the usual construction conditions, in conjunction with all other work at the site. The Electrical Contractor shall cooperate with the Architect, Construction Manager, all other Subcontractors and equipment suppliers working at the site. The Electrical Contractor shall coordinate the work and proceed in a manner so as not to delay the progress of the project.

B. The Electrical Contractor shall furnish information on all equipment that is furnished under this Section but installed under another Section to the installing Subcontractor as specified herein.

C. The Electrical Contractor shall provide all materials, equipment and workmanship to provide for adequate protection of all electrical equipment during the course of construction of the project. This shall also include protection from moisture and all foreign matter. The Electrical Contractor shall also be responsible for damage which he causes to the work of other Trades, and he shall remedy such injury at his own expense.

D. Waste materials shall be removed promptly from the premises. All material and equipment stored on the premises shall be kept in a neat and orderly fashion. Material or equipment shall not be stored where exposed to the weather. The Electrical Contractor shall be responsible for the security, safekeeping and damages, including acts of vandalism, of all material and equipment stored at the job site.

E. The Electrical Contractor shall be responsible for unloading all electrical equipment and materials delivered to the site. This shall also include all large and heavy items or equipment which require hoisting. Consult with the Construction Manager for hoisting/crane requirements. During construction of the building, the Electrical Contractor shall provide additional protection against moisture, dust accumulation and physical damage of the main service and distribution equipment. This shall include furnishing and installing temporary heaters within these units, as approved, to evaporate excessive moisture and ventilate it from the room, as may be required.

F. It shall be the responsibility of the Electrical Contractor to coordinate the delivery of the electrical equipment to the project prior to the time installation of equipment will be required; but he shall also make sure such equipment is not delivered too far in advance of such required installation, to ensure that possible damage and deterioration of such equipment will not occur. Such equipment stored for an excessively long period of time (as determined in the opinion of the Architect) on the project site prior to installation may be subject to rejection by the Architect.

G. Prior to installation, the Electrical Contractor has the responsibility to coordinate the exact mounting arrangement and location of electrical equipment to allow proper space requirements as indicated in the NEC. Particular attention shall be given in the field to group installations. If it is questionable that sufficient space, conflict with the work of other Subcontractors, architectural or structural obstructions will result in an arrangement which will prevent proper access, operation or maintenance of the indicated equipment, the Electrical Contractor shall immediately notify the Contractor and not proceed with this part of the Contract work until definite instructions have been given to him by the Architect.

H. Refer to the Architectural drawings for areas in which the concrete slab is poured on grade. In these areas a waterproofing membrane will be installed on the grade fill or earth prior to pouring of slab. Electrical conduits shall be installed to avoid the necessity of penetrating this waterproofing membrane. Penetration of the membrane, if required, shall only be made when specifically allowed by the Architect, and shall be made only at locations directed by the Architect.

3.2 INSTALLATION

A. General

1. Unless specifically noted or indicated otherwise, all equipment and material specified in Part 2 of this specification or indicated on the drawings shall be installed under this Contract whether or not specifically itemized herein. This Section covers particular installation methods and requirements peculiar to certain items and classes or material and equipment.

2. The Electrical Contractor shall obtain detailed information from manufacturers of equipment provided under Part 2 of this specification as to proper methods of installation.

3. The Electrical Contractor shall obtain final roughing dimensions and other information as needed for complete installation of items furnished under other Sections or furnished by the Owner.

4. The Electrical Contractor shall keep fully informed of size, shape and position of openings required for material and equipment provided under this and other Sections. Ensure that openings required for work of this Section are coordinated with work of other Sections. Provide cutting and patching as necessary.

5. All miscellaneous hardware and support accessories, including support rods, nuts, bolts, screws and other such items, shall be of a galvanized or cadmium plated finish or of another approved rust-inhibiting coating.

6. Throughout this Section where reference is made to steel channel supports, it shall be understood to mean that the minimum size shall be 1 5/8" mild strip steel with minimum wall thickness of 0.105", similar to Unistrut P1000 or equal products manufactured by Kindorf or Husky Products Co.

B. Access Panels

1. Access panels shall be furnished to the Construction Manager for installation by his designated Contractor.

C. Hangers and Supports

1. All horizontal runs of conduits shall be properly grouped, aligned, using substantial hangers, straps, etc. Hangers and supports shall be installed at intervals not exceeding NEC requirements.

2. Structural Support Interface

a. All conduit, raceways, electrical equipment and other similar system components which are supported by roof or floor joists shall be hung from the top chord or bottom chord panel point or a panel point shall be provided by applying a vertical web member. The maximum load shall not exceed 250 pounds.

b. All conduit, raceways, electrical equipment, etc., which are supported by roof/floor beams shall be hung from the beams with clamp attachments which engage both edges of the beam flange. The hanger shall be located directly below the web of the beam and the hanger load shall be limited to 1000 pounds in area above mechanical room and 250 pounds in remaining areas, unless otherwise approved by the Architect.

c. All additional supports, clamps, web members, etc., required to comply with the above requirements shall be provided by the Electrical Contractor, as applicable, for the work furnished and installed under this Contract.

3.3 MATERIALS AND WORKMANSHIP

A. All materials and equipment shall be new and unused and shall meet requirements of the latest Standards of NEMA, UL, IPCEA, ANSI and IEEE. Equipment shall have components required or recommended by OSHA, applicable NFPA documents and shall be UL listed and labeled.

B. Despite references in the specifications or on the drawings to materials or pieces of equipment by name, make or catalog number, such references shall be interpreted as establishing standards of quality for materials and performance.

C. Finish of materials, components and equipment shall not be less than Industry good practice. When material or equipment is visible or subject to corrosive or atmospheric conditions, the finish shall be as approved by the Architect.

D. Provide proper access to material or equipment that requires inspection, replacement, repair or service. If proper access cannot be provided, confer with the Architect as to the best method of approach to minimize effects of reduced access.

E. All work shall be installed in a neat and workmanlike manner and shall be done in accordance with all Local and State Codes.

F. The Owner will not be responsible for material, equipment or the installation of same before testing and acceptance.

3.4 GROUNDING

A. Install a complete equipment grounding system. Equipment grounding system shall be designed so metallic structures, enclosures, raceways, junction boxes, outlet boxes, cabinets, machine frames, metal fences, portable equipment and other conductive items in proximity to electrical circuits operate continuously at ground potential and provide low impedance path for possible ground fault currents.

B. System shall meet NEC requirements, and as shown on the drawings and as specified. Bonding jumpers shall be installed at all locations required by NEC.

C. A main electrical service copper ground bus shall be installed in the electric room. The bus shall be 20’-0” long by 3" by 1/4" in cross-section and supported off the walls with 3/4" spacers on 2'-0" centers, mounted a maximum of 36” AFF except where ground bus offset over doors and other obstructions. All electrical equipment in the electric room shall be properly bonded to the ground bus with an adequately sized copper conductor as well as the driven ground rod system external to the building.

D. Provide a complete grounding network, per NEC requirements, for main service equipment, consisting of, but not limited to, the following:

1. Ground counterpoise mat, 500 kcMIL copper, bare with down conductors from main electrical service ground bus in the main electric room. Down conductors shall be 500 kcMIL copper conductors in conduit to the ground loop.

2. Appropriate number of 3/4" diameter, 10'-0" long copper-clad steel ground rod clusters and copper ground wire connections from to form the counterpoise mat.

3. Connections from ground bus to the building structural steel. Where the steel structure is discontinuous, each section of structure shall be connected to the grounding network. Connections to building steel shall be 500 kcMIL copper conductors to the ground bus.

4. Metallic piping systems, including water piping, gas piping, etc. shall be bonded to the main service ground bus. Ground conductors to metallic piping shall be 500 kcMIL copper conductors in conduit

5. Ground points shall be driven to achieve 5 ohms maximum resistance to ground. Provide additional rods as required to achieve 5 ohms overall. Where geological conditions dictate, ground wire mesh may be provided or additional rods shall be driven in compacted earth areas as required to meet 5 ohm resistance requirement. Plate electrodes may be used where ground rods cannot be driven to achieve grounding requirements.

6. All grounding connections, including to ground loop system, building steel, etc shall be made with Erico – Cadweld exothermic process or Thomas & Betts – Furse Weld process. Ground connections to metallic piping shall be with approved grounding clamp.

E. Provide separate green insulated equipment grounding conductor for each single- or 3-phase feeder and each branch circuit. Install grounding conductor in common conduit with related phase and neutral conductors. Parallel feeders installed in more than (1) raceway shall have individual full size green insulated equipment ground conductors in each.

F. Determine numbers and sizes of screw terminals for equipment grounding bars in panelboards and other electrical equipment. Provide screw terminals for active circuits, spares and spaces.

G. Provide green, insulated equipment ground conductor in same raceway with associated phase conductors, as follows:

1. From main service ground to ground bus in service entrance equipment to ground bus in all distribution panels, remote panels, motor control centers, etc., size as shown on the drawings.

2. From green ground terminals of receptacles to green 10-32 washer-in-head outlet box machine screw and to panelboard grounding bus. (Receptacles with special cast boxes and factory designed and approved ground path do not require separate ground jumper.)

3. From panelboard ground bus to green 10-32 washer-in-head machine screw in ceiling outlet box or junction box, through flexible metallic conduit to ground terminal on lighting fixture and from green 10-32 washer-in-head machine screw in ceiling outlet box or junction box through flexible metallic conduit to green 10-32 washer-in-head machine screw in switch outlet box.

4. From panelboard ground bus to green 10-32 washer-in-head machine screw in junction box or disconnect switch through flexible metallic conduit to ground terminal in connection box mounted on single-phase fractional horsepower motor.

5. From equipment ground bus in motor control center through conduit and flexible metallic conduit to ground terminal in connection box mounted on 3-phase motors. Ground conductors for motors with separate starters and disconnect devices shall originate at ground bar in panelboard and shall be bonded to each starter and disconnect device enclosure.

6. From dry type transformer neutrals to the building steel (or the ground grid system) by means of copper wire, as scheduled on the drawings.

H. Provide green insulated grounding conductor in all non-metallic conduits.

I. The building grounding grid system shall be as follows:

1. 3/4" by 10'-0" driven ground rods shall be copper weld type. Connections to buried ground rods shall be Erico – Cadweld exothermic process or Thomas & Betts – Furse Weld process. Tops of all buried ground rods shall be a minimum of 6" below grade. Where rock is encountered, grounding plates may be used in lieu of grounding rods. Grounding plates shall be copper. Sizes of plates shall be as required.

2. All exposed connections shall be made by means of approved grounding clamps. Exposed connections between different metals shall be sealed with no-oxide paint Grade A. All buried connections shall be made by the Erico – Cadweld exothermic process or Thomas & Betts – Furse Weld process.

3. Dry season resistance of the grounding system shall not exceed 5 ohms. If such resistance cannot be obtained with the grounding system indicated on the drawings, the Electrical Contractor shall provide additional grounding as required and as directed by the Architect, to provide the 5 ohms resistance value.

4. A test shall be conducted at the completion of the grounding system installation in the presence of the Architect or his designated representative. The Electrical Contractor shall pay for all materials and workmanship. Defects appearing under the tests shall be corrected by the Electrical Contractor.

5. An interior and exterior buried grounding grid system shall connect the building steel and lightning protection system to driven ground rods.

J. All empty conduit runs shall be provided with insulated and grounding bushing and grounded by a #12 AWG green ground conductor to the nearest panel ground bus.

END OF SECTION

SECTION 26 0530 – WIRING METHODS

PART 1 – GENERAL

1.1 RELATED DOCUMENTS

A. All of the Contract Documents, as listed on the Table of Contents and including General and Supplementary Conditions and Division 01, General Requirements, shall be included in, and made part of, this Section.

1.2 DESCRIPTION OF WORK

A. The following general systems and equipment shall be provided, as a minimum, but not necessarily limited to the following:

1. Connections to HVAC, Plumbing, Fire Protection, Automatic Temperature Control, Construction Manager and Owner furnished equipment.
2. 120 volt power for remote alarms and connections to oil tank alarms, etc.
3. Hoisting, rigging, setting of all conduit, cable and equipment.
4. Testing, cleaning and adjusting.
5. Alarm panels.
6. Boxes.
7. Cable assemblies (prefabricated).
8. Conductors – 600 volts.
9. Conductors – medium voltage.
10. Conduit.
11. Elevator related work.
12. Gas alarms, oil tank alarms, wiring and connection.
13. Manholes – precast.
14. Mineral Insulated (MI) metal sheathed cable.
15. Solderless lugs and connectors.
16. Surface mounted raceway system.
17. Underground ductbank system.
18. Wiring devices and device plates.

1.3 RELATED WORK

A. For work to be included as part of this Section, to be furnished and installed by the Electrical Contractor, refer to the Related Work section of Specification Section 26 0510.

B. Carefully examine all of the Contract Documents, criteria sheets and all other Sections of the specifications for requirements which affect work under this Section, whether or not such work is specifically mentioned in this Section.

1.4 WARRANTY

A. Attention is directed to provisions of the General Requirements, Supplementary General Requirements and Section 26 0510 regarding guarantees and warranties for the work under this Contract.

1.5 CONNECTIONS TO ARCHITECTURAL, HVAC, PLUMBING AND OWNER FURNISHED EQUIPMENT

A. The Electrical Contractor shall provide all conduit connections to equipment provided under other Sections of the specifications, including final connections to equipment to result in a complete system, fully operational. Coordinate location of all equipment with the Construction Manager. Obtain installation diagrams and methods of installation of all equipment, from manufacturers. Follow instructions strictly. If additional information is required, obtain same from Architect.

B. All electrical connections to vibration isolated equipment shall be by flexible conduit of length at least 15 diameters, installed with visible slack, or in a loop configuration, to allow free movement of the equipment and prevent transmission of noise and vibration.

1.6 SUBMITTALS

A. Prepare and submit shop drawings in accordance with the requirements hereinbefore specified, and with Section 01 3300 – Submittal Procedures in the manner described therein, modified as noted hereinafter.

B. All shop drawings shall have clearly marked the appropriate specification number of drawing designation, for identification of the submittal.

C. Disposition of shop drawings shall not relieve the Electrical Contractor from the responsibility for deviations from drawing or specifications, unless he has submitted in writing a letter itemizing or calling attention to such deviations at time of submission and secured written approval from the Engineer, nor shall such disposition of shop drawings relieve the Electrical Contractor from responsibility for errors in shop drawings or schedules.

D. Shop drawings shall include, but shall not be limited to, the following:

1. Alarm panels.
2. Boxes.
3. Cable assemblies (prefabricated).
4. Conductors – 600 volts.
5. Conductors – medium voltage.
6. Conduit.
7. Elevator related work.
8. Gas alarms, oil tank alarms, wiring and connection.
9. Manholes – precast.
10. Mineral Insulated (MI) metal sheathed cable.
11. Solderless lugs and connectors.
12. Surface mounted raceway system.
13. Underground ductbank system – routing.
14. Wiring devices and device plates.

15. Routing of all conduits 2½ inches in diameter and larger.

PART 2 – PRODUCTS

2.1 ALARM PANELS AND SYSTEMS FURNISHED BY OTHER TRADES

A. Furnish and install all power wiring connections and conduit (120 volt) as required for alarm panels and metering devices supplied by Plumbing, Fire Protection, HVAC and Automatic Temperature Control Trades. All alarm system panels, components, interface wiring and conduit shall be provided by the respective Trade.

2.2 BOXES

A. Junction Boxes

1. Junction boxes shall be constructed of code gauge galvanized steel and shall be installed at points as required whether indicated on the drawings or not. Minimum dimension shall not be less than NEC requirements.

2. Provide flat plain covers with suitable flat head machine screws or slotted truss head bolts.

3. Boxes exceeding 4’-0” in any direction shall be reinforced with angle iron stiffeners.

4. PVC Schedule 40 junction boxes shall be provided in areas with corrosive atmosphere.

5. Boxes shall be manufactured by one of the following: Wiegmann, Lee Products Co., Harry Richmond Co., Commercial Sheet Metal Co., Hoffman, B-Line or McKinstry.

B. Outlet Boxes

1. Outlet boxes shall be one-piece galvanized steel construction meeting NEC requirements, of proper size and suitable for location indicated on the drawings.

2. Outlet boxes in wall partitions shall not be installed back-to-back.

3. Boxes for surface mounted devices shall be a finished type (surface box). Boxes shall be stainless steel.

4. Boxes for exterior work shall be FS or FD Series, with cadmium plated covers. Steel boxes will not be permitted.

5. PVC Schedule 40 outlet boxes shall be provided in areas with corrosive atmosphere.

6. Outlet boxes used as junction boxes shall not be less than 4 11/16” square and 2” deep.

7. Outlet boxes shall be manufactured by one of the following: Crouse-Hinds Co., Appleton Electric Co., Steel City Electric Co., T&B or RACO.

C. Pull Boxes

1. Pull boxes shall be constructed of code gauge galvanized steel and shall be installed at points as required whether indicated on the drawings or not. Minimum dimension shall not be less than NEC requirements.

2. Provide flat plain covers with suitable flat head machine screws or slotted truss head bolts.

3. Boxes exceeding 4’-0” in any direction shall be reinforced with angle iron stiffeners and contain two (2) section covers and cable supports.

4. PVC Schedule 40 pull boxes shall be provided in areas with corrosive atmospheres.

5. Pull boxes for medium voltage feeders shall have barriers to separate each medium voltage circuit.

6. Boxes shall be manufactured by one of the following: Wiegmann, Lee Products Co., Harry Richmond Co., Commercial Sheet Metal Co., Hoffman, B-Line or McKinstry.

2.3 CABLE ASSEMBLIES (PREFABRICATED)

A. General

1. Furnish and install multi-conductor cable assemblies as shown on the drawings and specified herein, including all necessary fittings, hangers, accessories, etc. Multi-conductor cable assemblies shall be prefabricated at the factory and shipped to the site on cable reels.

~~B. Armored Cable (AC) – Hospital Grade~~

~~1. Uses Permitted~~

~~a. Hospital grade AC cable may be utilized in lieu of conduit and cable in dry, hollow partitions and ceiling cavities for general purpose, 20 ampere, single phase, 120 or 277 volt, branch circuits for receptacles and lighting fixtures only.~~

~~b. For branch circuit homeruns to surface mounted panels, AC cable shall terminate in a junction box 5’-0” (minimum) horizontally away from the panel. If panelboards are located in rooms designated as electric rooms or~~

~~closets, AC cable shall terminate in a junction box outside of the electric room and conduit shall be run to the panel.~~

~~2. Uses Not Permitted~~

~~a. AC cable shall not be allowed in electric rooms or closets.~~

~~b. AC cable shall not be used in mechanical or plumbing rooms, closets or shafts, including mechanical penthouse.~~

~~3. Reference Standards~~

~~a. AC cable shall be in compliance with the latest applicable edition of the following industry standards:~~

~~1) National Electrical Code (NEC)~~

~~a) NEC 517-13~~
~~b) NEC 517-50~~

~~2) Federal Specification J-C-30B~~
~~3) Underwriters laboratory (UL)~~
~~4) UL 4~~
~~5) UL 1479~~

~~4. Construction~~

~~a. Conductors~~

~~1) Conductors shall be soft drawn 98% conductive copper with 90°C, THHN, 600 volt rated insulation. Included with each length of AC cable shall be the required number of phase conductors (maximum 3), one neutral conductor per phase conductor, insulated, full size, grounding conductor and separate uninsulated bonding wire.~~

~~2) Unless indicated otherwise on the drawings, minimum size conductors for 20 ampere branch circuits shall be as follows:~~

~~Minimum Conductor Size~~	~~Distance to First Device~~			
	~~120 Volt~~	~~208 Volt~~	~~277 Volt~~	~~480 Volt~~
~~#12 AWG~~	~~<60'~~	~~<110'~~	~~<140'~~	~~<250'~~
~~#10 AWG~~	~~60' – 100'~~	~~110' – 170'~~	~~140' – 230'~~	~~250' – 400'~~
~~#8 AWG~~	~~>100'~~	~~>170'~~	~~>230'~~	~~>400'~~

~~NOTE:~~
~~For branch circuits utilizing #8 AWG conductors, the branch circuit conductors from the panel shall terminate in a network junction box in the area of the circuit(s) served. Branch conductors from this junction box to the device(s) on the circuit shall be #10 AWG conductors.~~

~~3) Unless indicated otherwise on the drawings, minimum size wire for remote control signal circuit and interlock wiring shall be #14 AWG. Fire alarm wiring shall be per the Fire Alarm System Section of these specifications.~~

~~4) Each conductor, including ground conductor, shall be wrapped with nylon covering.~~

~~5) Color Coding~~

~~a) Color coding of conductors shall match the Owners color coding standard. If no standard color coding system exists, use the following:~~

~~208/120 Volts~~			~~480/277 Volts~~		
~~A Phase~~	~~-~~	~~Black~~	~~A Phase~~	~~-~~	~~Brown~~
~~B Phase~~	~~-~~	~~Red~~	~~B Phase~~	~~-~~	~~Orange~~
~~C Phase~~	~~-~~	~~Blue~~	~~C Phase~~	~~-~~	~~Yellow~~
~~Neutral~~	~~-~~	~~White~~	~~Neutral~~	~~-~~	~~Grey~~
~~Ground~~	~~-~~	~~Green~~	~~Ground~~	~~-~~	~~Green with Yellow Stripe~~
~~Isolated Ground~~	~~-~~	~~Green with Orange Stripe~~			

~~b) Color coding shall be continuous on insulation for all conductors.~~

~~c) Electrical Contractor shall provide additional identification to identify each neutral conductor with its associated phase conductor.~~

~~b. Exterior armor~~

~~1) The exterior sheath shall be manufactured of galvanized steel or aluminum armor and shall be wrapped around the conductors at the factory.~~

~~c. Each components of the cable assembly shall contain less than 300 ppm of lead, and shall meet the requirements of LEED for Healthcare MR Credit 4.2.~~

~~5. Manufacturer~~

~~a. AC cable shall be as manufactured by AFC Series HFC-90, or equivalent product as manufactured by Southwire or Encore~~

~~6. Fittings~~

~~a. Fittings for AC cable shall be suitable for use with the appropriate cable assembly.~~

~~b. Fitting shall be as manufactured by Neer, Bridgeport, Arlington, Electroline, OZ Gedney, Thomas and Betts, ETP or Regal.~~

~~c. Include manufacturers literature with shop drawings stating application compatibility with each cable type.~~

B.

1.

a.

b.

2.

a.

b.

3.

a.

1)

a)
b)
c)

d)

2)

3)

a)
b)
c)

4.

a.

1)

2)

3)

4)

5)

6)

7)

8)

a)

b)

c)

b.

1)

2)

3)

5.

a.

6.

a.

b.

c.

2.4 CONDUCTORS, COPPER – 600 VOLTS

A. General

1. Wire and cable for feeders, lighting, power, branch circuits and control circuits for systems operating between 50 and 600 volts shall be soft drawn, 98% conductive copper with 600 volt rated insulation.

2. All wiring shall be installed in conduit (power, low voltage and control wiring), unless specifically indicated otherwise.

3. All feeder, branch circuit, remote control, signal circuit and interlock wiring shall be single conductor. Conductors #8 AWG and larger shall be stranded. All wiring #10 AWG and smaller shall be stranded.

4. Unless indicated otherwise on the drawings, minimum size conductors for 20 ampere branch circuits shall be as follows:

Minimum Conductor Size	Distance to First Device			
	120 Volt	208 Volt	277 Volt	480 Volt
#12 AWG	<60’	<110’	<140’	<250’
#10 AWG	60’ – 100’	110’ – 170’	140’ – 230’	250’ – 400’
#8 AWG	>100’	>170’	>230’	>400’

NOTE:
For branch circuits utilizing #8 AWG conductors, the branch circuit conductors from the panel shall terminate in a network junction box in the area of the circuit(s) served. Branch conductors from this junction box to the device(s) on the circuit shall be #10 AWG conductors.

5. Unless indicated otherwise on the drawings, minimum size wire for remote control signal circuit and interlock wiring shall be #14 AWG. Fire alarm wiring shall be per the Fire Alarm System Section of these specifications.

6. Conductors #10 and #12 AWG shall be connected with pre-insulated spring connectors encased in a steel shell and rated at not less than 105°C. A minimum of 3/8" skirt shall cover the bare wires. The connector shall meet with UL approval for fixture and pressure work and shall be "B-Cap" Type B1, B2 and B4 electrical spring connectors as manufactured by the Buchanan Co., or approved equal.

7. Each components of the cable assembly shall contain less than 300 ppm of lead, and shall meet the requirements of LEED for Healthcare MR Credit 4.2.

B. Manufacturers

1. Southwire
2. Cerro
3. Encore
4. Service Wire

C. References

1. All wiring shall conform to the National Electrical Code for construction and use.

2. Wiring in hot locations and for recessed fixtures shall have heat-resistant insulations recognized by NEC such as RHH, etc.

3. Conductor type THHW shall meet or exceed the following:

   a. ASTM B-3 or B-8
   b. UL
   c. UL listed as type THHW

4. Conductor types THWN shall meet or exceed the following:

   a. ASTM B-3 or B-8
   b. UL Standard 83
   c. UL listed as type THWN

5. Conductor type XHHW shall meet or exceed the following:

   a. ASTM B-3 or B-8
   b. UL 44
   c. UL listed as type XHHW

6. Conductor type XHHW-2 shall meet or exceed the following:

   a. ASTM B-3 or B-8
   b. UL 44

c. UL listed as type XHHW-2

D. Insulation types for all conductors shall be as follows:

Description	Location		
	Dry	Damp	Wet
Interior branch circuits #6 AWG and smaller	THHW	THWN	THWN
Interior branch circuits larger than #6 AWG	THHN	XHHW	XHHW-2
Interior feeders	THHN	XHHW	XHHW-2
Exterior feeder and exterior branch circuit wiring	XHHW-2	XHHW-2	XHHW-2
Feeders connected to 100% rated circuit breakers	XHHW-2	XHHW-2	XHHW-2

E. Color Coding

1. Color coding of conductors shall match the Owners color coding standard. If no standard color coding system exists, use the following:

208/120 Volts			480/277 Volts		
A Phase	-	Black	A Phase	-	Brown
B Phase	-	Red	B Phase	-	Orange
C Phase	-	Blue	C Phase	-	Yellow
Neutral	-	White	Neutral	-	Grey
Ground	-	Green	Ground	-	Green with Yellow Stripe
Isolated Ground	-	Green with Orange Stripe			

2. Color coding shall be continuous on insulation for all conductors. For conductors larger than #6 where continuous color coding is not available, each conductor shall be marked with color tape at all connections and in all pull, junction and outlet boxes.

3. For 120 volt and 277 volt single phase circuits, Electrical Contractor shall provide additional identification to identify each neutral conductor with its associated phase conductor in all pull, junction and outlet boxes.

2.5 2 HOUR FIRE RATED MINERAL INSULATED (MI) CONDUCTORS

A. General

1. This section includes 2 hour fire rated type MI mineral-insulated metal-sheathed cable having a single copper conductor, a seamless copper sheath, cable connectors and connections.

2. The following emergency branch and legally required branch feeders, branch circuits and control circuits shall be 2 hour fire rated type MI mineral-insulated metal-sheathed cable where not installed in spaces fully protected by an approved, automatic fire suppression system, including a wet sprinkler system or within 2 hour fire rated rooms, closets and/or shafts:

   a. Feeders from the generator(s) to main emergency distribution equipment.
   b. Feeder from the generator or generator distribution system to the fire pump controller.
   c. Feeders from main emergency distribution equipment to each emergency branch and legally required branch automatic transfer switch.
   d. Feeders from each emergency branch automatic transfer switch to associated distribution equipment.
   e. Feeders from emergency branch and legally required branch distribution equipment to all downstream switchboards panelboards, transformers, enclosed circuit breakers, etc.
   f. Feeder from the main normal distribution system to the fire pump controller.
   g. Branch circuit wiring to all smoke evacuation, stairwell pressurization, elevator pressurization fans, and associated equipment.
   h. Branch circuit to elevator motor(s), controller(s) and cab lighting.
   i. Engine start circuit from each automatic transfer switch to the generator.

B. References

1. ANSI/NFPA 70 - National Electrical Code
2. UL Category FHIT – Classified Electrical Circuit Integrity System with a 2 hour fire rating, 12/2012.
3. FM 3D0Q9.AM 8/1997

C. Qualifications

1. Manufacturer shall be a company specializing in manufacturing products specified in this Section with minimum ten years documented experience.

2. Cable shall not off gas or propagate smoke.

D. Regulatory Requirements

1. Cable shall conform to requirements of ANSI/NFPA 70.

2. Furnish products listed and classified by Underwriters Laboratories, Inc. as suitable for purpose specified and shown.

E. Project Conditions

1. Verify that field measurements and conditions are as shown on Drawings.

2. Cable routing shown on Drawings is approximate. Route cable as required to meet project conditions.

3. Where cable routing is not shown, and destination only is indicated, determine exact routing and lengths required.

F. Coordination

1. Coordinate work specified in this section with work provided under other electrical work and the work of other trades.

2. Determine required separation between cable and other work.

3. Determine cable routing to avoid interference with other work.

G. Manufacturer

1. Pentair Thermal Management/Pyrotenax System 1850 2-hour fire rated.

H. Mineral-Insulated Metal-Sheathed Cable

1. Description: ANSI/NFPA 70, Type MI

2. Conductor: Copper

3. Insulation Voltage Rating: 600 volts.

4. Cable Temperature Rating:

   a. 60 degrees C. for conductors rated 125 amperes and below.
   b. 75 degrees C. for conductors rated 126 amperes and above.

5. Termination Temp. Rating:

   a. 60 degrees C. for conductors rated 125 amperes and below.
   b. 75 degrees C. for conductors rated 126 amperes and above.

6. Insulation Material: Magnesium oxide refractory mineral.

7. Metal-sheath Material: Seamless soft-drawn copper.

8. Fire Rating: Cable assembly, including factory splices and supports shall have a 2 hour fire rating as listed and classified by Underwriters Laboratories, Inc.

9. Overjacket: None required; or PVC if cable is directly buried.

10. Cable sheath shall be marked with conductor size, voltage and UL fire resistant classification number.

11. Each components of the cable assembly shall contain less than 300 ppm of lead, and shall meet the requirements of LEED for Healthcare MR Credit 4.2.

I. Wiring Connectors And Terminations

1. Cable Termination:

   a. Pentair Thermal Management/Pyrotenax Model Quick-Term, Installation Sheet 638. Where solid rated lugs are used, approved terminations for this termination shall be provided.

2. Lug Connection for solid copper conductor:

   a. ILSCO Model Lo-250: #1 AWG through 250 kcMIL
   b. ILSCO Model CRA-300: 350 kcMIL
   c. ILSCO Model CRA-400: 500 kcMIL

3. Cable Splice:

   a. All cable splices of MI cable required due to length of conductor shall be factory installed and have 2 hour fire rating equivalent to the conductor itself. Field splices shall not be allowed unless installed within 2 hour fire rated rooms. Field splices within 2 hour fire rated rooms shall be Pentair Thermal Management/Pyrotenax Model Installation Sheet 550.

J. Examination

1. Verify that cable end factory temporary seals have remained intact, that the insulation has not been exposed to air, and that no moisture has entered cable insulation.

2. Verify that work of other trades likely to damage cable has been completed.

K. Storage

1. Cables shall be shipped from the manufacturer with ends temporarily sealed against moisture ingress.

2. When cables are cut in the field, the end shall be sealed using standard sealing compound and PVC tape.

3. Cable shall be stored in a clean dry location.

L. Handling

1. Cable shall be uncoiled by rolling or rotating supply reel. Do not pull from coil periphery or center.

2. Take precautions necessary to prevent damage to cable from contact with sharp objects, including pulling over foreign material or sheaves.

M. Wiring Methods

1. Fire Rated Locations: Use only fire rated cable.

2. Use wiring methods indicated on Drawings and as specified herein.

2.6 CONDUCTORS – MEDIUM VOLTAGE

A. General

1. The medium voltage cable shall be single conductor, ethylene-propylene rubber (EPR) insulated, shielded and jacketed power cable for medium voltage applications, and shall be in accordance with NEC Article 328. Cables shall be UL listed and designated as MV-105. Cable shall be able to withstand a fault at the magnitude indicated in the short circuit study for at least 5 seconds.

2. The cable shall be in compliance with the latest applicable edition of the following Industry Standards:

   a. AEIC CS-8
   b. ICEA S-93-639/NEMA WC-74
   c. UL 1072
   d. NFPA 70

3. Each components of the cable assembly shall contain less than 300 ppm of lead, and shall meet the requirements of LEED for Healthcare MR Credit 4.2.

B. Manufacturers

1. Medium voltage conductors shall be manufactured by one of the following:

   a. General Cable
   b. Southwire
   c. Prysmian
   d. Okonite

C. Cable Description

1. Conductor: The Class B concentric copper conductor size shall be as listed on the drawings and meet ASTM B3 and ASTM B8.

2. Strand Screen: The strand screen shall consist of an extruded semiconducting Polymetric layer over the conductor.

3. Insulation: The high quality EPR compound shall be lead free thermosetting elastomer. The insulation shall comply with the referenced specifications and shall be as follows:

Rated Voltage (Phase to Phase) kV	Conductor Size AWG or MCM	Insulation Thickness (Mils)
5	8 – 1,000	115 (100% and 133%)
15	2 – 1,000	175 (100%)
15	2 – 1,000	220 (133%)
25	1 – 1,000	260 (100%)
25	1/0 – 1,000	280 (133%)
35	1/0 – 1,000	345 (100%)
35	1/0 – 1,000	420 (133%)

D. Insulation Shielding

1. The semi-conducting insulation shielding shall be triple extruded. The thermosetting material shall meet the requirements of the referenced specifications. Extruded semi-conducting thermoplastic systems will not be acceptable.

E. Metallic Shielding

1. The minimum non-magnetic, metallic shield shall conform to UL 1072, except that a helically applied copper tape shall be at least 5 mils thick and have a minimum lap of 25%.

F. Jacket

1. A PVC jacket shall be tightly extruded over the underlying core. The jacket shall be PVC and shall comply with the referenced specifications. The overall jacket shall be printed at intervals not exceeding 24" with the following information:

   a. Manufacturer's name
   b. Plant of manufacture (Designation Code)
   c. Trade name
   d. Insulation type and thickness
   e. Conductor size and type ("Cu")
   f. Maximum working voltage and insulation level
   g. UL Type designation of cable (MV-105)
   h. UL identification - ("UL")
   i. UL rating(s), as applicable
   j. Year of manufacture

G. Factory Tests

1. Tests on completed cable shall be in accordance with Sections F, G, H and J of AEIC CS-8. Certified test reports shall be provided at time of shipment. These certified copies shall include copies of actual production test values. If the cable is drawn from a previously manufactured inventory program, Certificates of Compliance and documentation of AEIC CS-6 Qualification shall be provided prior to shipment. The cable shall also be tested as described under Part 3 of these specifications.

H. Packaging

1. Each cable length shall be durably sealed before shipment to prevent entrance of moisture. Reels and reel markings shall comply with Section L of AEIC CS-8 and ICEA A-9-428. The Electrical Contractor shall provide the manufacturer with suitable shipping lengths subject to a ±0.5% tolerance.

I. Installation

1. New cables shall be pulled through existing and new ductbanks as indicated on the drawings. Cable tension shall be monitored and shall not exceed the manufacturer's limitations.

2. Extreme caution shall be exercised while pulling cable, since energized feeders shall be present in existing manholes and ductbanks.

3. Cable racks and porcelain insulators shall be installed in new manholes. The cable racks shall be bonded to the grounding system. Cables shall be properly racked in the manholes, utilizing the cable racks and porcelain insulators. In existing manholes, the existing cable racks shall be reviewed by the Owner. If cable racks are deemed inadequate, the Electrical Contractor shall furnish and install new cable racks and supports, as required, in each existing manhole and bond same to grounding system.

J. Cable Splicing and Termination Kits

1. Heat Shrink Kits

a. Power cable splices and terminations for shielded solid dielectric plastic cables shall be factory engineered kits containing all necessary components to reinstate primary cable insulation, metallic shielding and grounding systems and overall jacket to the equivalent of the cable itself.

b. Splices and terminations shall be of a uniform cross-section, heat-shrinkable polymeric construction utilizing linear stress relief and high dielectric strength insulating layers. The outer insulating layer shall be bonded to a conducting layer for shielding. The splice shall be rejacketed with a heavy-wall, heat-shrinkable lined sleeve to provide a waterproof hot melt adhesive seal.

c. The splice or termination shall accommodate a range of cable sizes and be completely independent of cable manufacturers tolerances.

d. When assembled on cables, the splice or termination shall be capable of passing the electrical test requirements of IEEE 48-1975, IEEE 404-1986 and water immersion tests of ANSI-C 119.2-1974.

1) Splice and termination kit manufacturer shall provide a test report demonstrating compliance with the above requirements.

e. Splice and termination kit manufacturer shall provide on-site demonstrations for the Electrical Contractor and shall provide supervision of each splice.

f. Splices and terminations shall be manufactured by Raychem Corporation.

2. All "X" and "Y" joints shall have auxiliaries, lead sleeves, compound filled.

3. All joints and cables within manholes shall be fireproofed with 3M-77 or Ply-Arc tape.

2.7 CONDUIT PENETRATION SEALS

A. Conduit penetration seals shall be Link-Seal by PSI-Thunderline. Seals shall be modular, mechanical type, consisting of inter-locking synthetic rubber links shaped to continuously fill the annular space between the pipe and the wall opening.

B. Elastomeric elements shall be sized and selected per manufacturer's recommendations and have the following properties as designated by ASTM. Coloration shall be throughout elastomer for positive field inspection. Each link shall have a permanent identification of the size and manufacturer's name molded into it.

1. -40 to +250ºF (-40 to +121ºC)
2. EPDM = ATSM D2000 M3 BA510
3. Color = Black

C. Modular seal pressure plates shall be molded of glass reinforced nylon polymer with the following properties:

1. Izod Impact - Notched = 2.05ft-lb/in. per ASTM D-256
2. Flexural Strength @ Yield = 30,750 psi per ASTM D-790
3. Flexural Modulus = 1,124,000 psi per ASTM D-790
4. Elongation Break = 11.07% per ASTM D-638
5. Specific Gravity = 1.38 per ASTM D-792

D. Models LS200-275-300-315 shall incorporate the most current Link-Seal® Modular Seal design modifications and shall include an integrally molded compression assist boss on the top (bolt entry side) of the pressure plate, which permits increased compressive loading of the rubber sealing element.

E. Models 315-325-340-360-400-410-425-475-500-525-575-600 shall incorporate an integral recess known as a "Hex Nut Interlock" designed to accommodate commercially available fasteners to insure proper thread engagement for the class and service of metal hardware. All pressure plates shall have a permanent identification of the manufacturer's name molded into it.

F. All fasteners shall be sized according to latest Link-Seal® modular seal technical data. Bolts, flange hex nuts shall be:

1. Mild Steel with a 60,000 psi minimum tensile strength and 2-part Zinc Dichromate coating per ASTM B-633 and Organic Coating, tested in accordance with ASTM B-117 to pass a 1,470 hour salt spray test.

G. Provide Model WS steel sleeves at all wall and floor penetrations. Sleeves shall be Schedule 40 and have integrally water stop sized having a minimum of two inches larger than the outside diameter of the sleeve itself and allowing 1/2" movement between wall forms to resist pour forces. Each sleeve assembly shall have end caps installed at each end of the sleeve so as to prevent deformation during the initial concrete pour, and to facilitate attaching the sleeve to the wall forms. End caps shall remain in place to protect the opening from residual debris and rodent entry prior to pipe insertion.

H. Conduit penetration seal components and systems shall be domestically manufactured at a plant with a current ISO-9001:2000 registration. Copy of ISO-9001:2000 registrations shall be a submittal item.

2.8 FLOOR BOXES

A. Floor boxes shall be 600 Series by Thomas & Betts or approved equal by Hubbell Inc. Cast Iron Series. Floor boxes shall be completely watertight cast iron with interior and exterior leveling screws permit adjustment to meet finished floor. Boxes shall be painted inside and out with weatherproof silver enamel paint intended for use on metal for additional corrosion resistance.

B. Boxes shall include:

1. Expendable cap to prevent ingress of concrete during pour
2. Threaded conduit openings shall be 1" as standard
3. Cubic inch capacity not less than 50 cu. in.
4. Constructed per U.L. 514A

C. Provide carpet or tile frame as required by the intended floor. Frame shall be brass, aluminum, polycarbonate, or nylon as determined by the Architect.

D. Cover assembly shall protect against the ingress of water or foreign material with a gasket and shall be U.L. listed as mop-tight. Manufacturers standard availability of covers shall accommodate standard wiring devices or conduit knock-outs of various sizes.

E. Locate position for floor boxes and runs of conduit as shown on the plans. Exact locations of boxes and conduits shall be coordinated with the Architect.

2.9 METALLIC CONDUIT

A. General

1. Raceways for feeders and branch circuits shall be metallic, rigid metal conduit, intermediate metal conduit (IMC) or electrical metallic tubing (EMT) subject to the restrictions of the National Electrical Code, minimum of 3/4".

B. Electrical Metallic Tubing (EMT)

1. EMT shall be permitted for both exposed and concealed work.

2. EMT shall not be permitted:

   a. Where subject to physical damage, including mechanical equipment rooms below 10'-0" AFF.
   b. In corrosive areas.
   c. In cinder block construction.
   d. In hazardous (classified) locations.
   e. For medium voltage feeders.

3. Fittings shall be double steel set screw type.

C. Intermediate Metal Conduit (IMC)

1. IMC shall be permitted under all conditions subject to the restrictions of the National Electrical Code.

2. IMC shall not be permitted for non-concrete encased medium voltage feeders.

3. Fittings shall be steel compression type.

D. Rigid Metal Conduit (RMC)

1. RMC shall be permitted under all conditions subject to the restrictions of the National Electrical Code.

2. All fittings shall be threaded.

E. PVC Coated Rigid Metal Conduit (PVC-RMC)

1. PVC-RMC shall be permitted under all conditions subject to the restrictions of the National Electrical Code.

2. All fittings shall be threaded.

3. PVC-RMC and threads shall be hot-dipped galvanized inside per UL-6 as primary corrosion protection. PVC-RMC conduits shall comply with all sections of UL-6, ANSI C80.1 and NEMA RN-1 2005 standard.

4. Full lengths of pipe shall have hot-dipped galvanization on both ends and threads.

5. PVC-RMC shall be Thomas & Betts – OCAL or approved equal that provides hot-dipped galvanization as primary protection and PVC coating as primary protection in accordance with UL, NEMA and ANSI Standards.

F. Flexible liquid-tight metal conduit shall be used only for connection to motors, pumps, air handling units, transformers, modular office furniture, and final connections to all other vibrating equipment and shall be waterproof type, with an interwoven ground conductor. Separate ground conductor shall be installed for all flexible conduit sizes. Flexible conduit may also be used for connecting to lighting fixtures. Maximum length of flexible conduit allowed shall be 5'-0" from the junction box to the fixture. All lighting branch circuit home runs to panelboard shall be in conduit. Flexible liquid-tight metal conduit shall be manufactured by Electri-Flex, AFC, Anamet, or equal.

G. All empty conduit runs shall have nylon pull cords installed. Tie a washer larger than the conduit on each end of nylon pull cord to avoid losing pull cord in conduits.

H. Conduit fittings shall be cast ferrous alloy complete with gaskets and covers where required. Expansion fittings shall be used where conduit passes through building expansion joints, weatherproof telescopic type. The expansion fitting shall permit a minimum movement of 4".

I. Conduit and tubing shall be manufactured by one of the following:

1. Allied Tube & Conduit Co.
2. Wheatland
3. Republic

J. Flexible conduit shall be manufactured by one of the following:

1. AFC
2. Electri-Flex
3. Anaconda

2.10 PLASTIC CONDUIT

A. Direct buried plastic conduit shall be Schedule 40 and concrete encased in duct banks. Conduit shall be composed of PVC, UL listed and shall conform to NEMA Standards.

B. PVC Schedule 40 conduit shall be furnished in corrosive atmosphere areas.

C. All penetrations through floor slabs, foundation walls or manhole walls shall be rigid steel conduits.

D. Plastic conduit and fittings shall be manufactured by one of the following:

1. JM/Eagle
2. Cantex
3. National

2.11 MANHOLES

A. Furnish and install, where indicated on the drawings, heavy duty precast reinforced concrete manholes for telecommunications and power.

B. Manholes shall have minimum internal dimensions as indicated below:

1. Electric manholes: 8'-0" by 6'-0" with a minimum head room of 6'-6".

2. Telecommunications manholes: 8'-0" by 6'-0" with a minimum head room of 6'-6".

C. Concrete Minimum Compressive Strength

1. 5000 psi at 28 days in accordance with ASTM, reinforced in accordance with ASTM specification of H-20 loading.

D. Joints between sections shall have self-aligning V-grooves and asphaltic butyl compound joint sealant.

E. Precast units shall be manufactured by Oldcastle Precast Group, American Precast, or approved equal.

F. Frames and covers shall be cast iron heavy duty type, suitable for H-20 street loading and have machined bearing surfaces. Electric and telecommunications manholes shall have a minimum clear opening of 36" diameter. The words "Medium Voltage Electric" as applicable shall be cast on upper side of each cover.

G. Manholes shall be provided with the following accessories. All steel components shall be hot dipped galvanized.

1. 7/8" pulling irons.

2. Heavy duty adjustable notched channel cable racks, arms, and free moving porcelain saddle insulators. Provide racks at maximum 3'-0" intervals.

3. Provide a 10'-0" long copper clad steel drive ground rod in each manhole, extended 6" above manhole floor. All exposed non-current carrying metal accessories, and parts in manhole shall be connected to this ground rod via bare #6 AWG copper conductors.

4. Sump pits.

2.12 SOLDERLESS LUGS AND CONNECTORS

A. All lugs for 600 volt feeder conductors and connectors for branch circuit joints shall be UL Listed for copper and aluminum conductors and of the solderless type.

B. Compression Lugs

1. Compression terminals shall be UL Listed for copper and aluminum conductors and shall be electro tin plated with internally beveled barrel and shall be clearly marked with wire size, die index, color code and the proper number and location of crimps. Connectors shall be prefilled from manufacturer with oxide inhibiting compound. (Burndy YA – A series connectors or equal)

2. Compression connectors shall be properly crimped to the recommended torque value. Identification of proper torque value and/or use of proper size die shall be visible on all compression terminals. (Burndy Hypress Tools and lugs or equal.) All compression connections shall be made with connectors and tools which can be verified to be UL listed to be used together. (Burndy Hypress tools and lugs or equal)

C. Lugs and wire connectors shall be one of the following: Ilsco, Anderson, Burndy Corp. or Thomas & Betts Co.

2.13 SURFACE MOUNTED RACEWAY SYSTEM

A. General

1. This specification covers a power wiring system with a factory wired multi-outlet raceway used for branch circuit wiring and/or voice, data, video and other low-voltage wiring. Multiple outlet raceway system shall consist of raceway, appropriate fittings, receptacle harness and receptacle identification to complete the installation as shown on the building plans.

2. The multi-outlet assembly is to be utilized in dry interior locations, and UL Listed as a Multi-outlet Assembly and Surface Metal Raceway as covered in Articles 380 and 386 of the National Electrical Code, as adopted by the National Fire Protection Association and as approved by the American National Standards Institute. The prewired raceway systems shall be listed by Underwriters' Laboratories under File Nos. E68073 Guide PVGT and E77734 Guide RJBT.

3. Submit drawings for approval, show the complete layout of all products that make up the complete system for each floor prior to installation with raceway lengths, device type (power and communications), locations and circuit identification.

4. Three (3) copies of record drawings, showing each raceway section, shall be provided upon delivery of the system.

B. Manufacturer

1. Manufacturer for multi-outlet assembly specified herein shall be as follows:

a. Wiremold Prewired Systems
b. PG LifeLink - Versaduct
c. Hubbell Inc.
d. Mono-Systems, Inc

2. Manufacturers requesting consideration as an alternative to the specified prewired systems shall submit documentation establishing their product equality at least 10 days prior to bid date. Request shall include documentation of UL listings as both a Multi-outlet Assembly and a Surface Raceway and include a sample of the prewired components. A list of similar installations in service for two (2) years or longer must be provided. Systems of other manufacturers may be

considered equal, if in the opinion, and the written approval of the Engineer, they meet all the performance standards specified herein.

C. Raceway

1. Raceway shall have 2 wiring compartments with field removable cover(s). Raceway shall have a nominal wall thickness of 0.078". Multiple compartment raceway shall have an integral dividing barrier isolating wiring compartments and provided with fittings that maintain the separation of compartments.

2. Raceway covers shall be a minimum of 24" in length to facilitate future modification. Covers must be removable with a standard straight blade screwdriver without marring. Raceways having two covers must allow each cover to be removed separately without allowing access into the compartment(s) enclosed by the other cover.

3. Raceway shall be manufactured of extruded #6063-T5 aluminum with a heavy etched Architectural Class II clear anodized finish (AA-C22A31) with a minimum thickness of 0.004". Each length of raceway shall be cut to specified job requirements. Field cutting of raceway will not be permitted.

4. Ground continuity shall be maintained throughout the entire raceway length by means of a factory installed grounding conductor. The grounding conductor(s) shall be the same size(s) of the branch circuit(s) serving the raceway.

D. Wiring Devices

1. Wiring devices and other connectors shall be factory installed on 24 inch centers, electrically wired, and covers labeled with self-adhesive engraved nameplate as identified in the building plans.

2. Each receptacle shall be identified noting the panel number and circuit number from which it is fed. Receptacles rated higher than a NEMA 50-20R configuration shall also be provided with voltage, phase and amperage identified in the same manner.

3. Receptacles in raceway connected to the optional-standby branch of the emergency power system shall be red.

4. Receptacles mounted within 6’-0” of a sink shall be GFI type.

5. Raceway sections shall be provided with 12" pigtails at feed locations for ease of installation. Grounding shall be maintained by means of factory installed NEC sized grounding conductor(s) and utilize insulation displacement connectors as required.

F. Fittings

1. The multi-outlet system is to consist of factory assembled product with a full complement of fittings including, but not limited to, elbows (90º, internal and

external), slide couplings for joining raceway sections, blank and caps for closing open ends of the raceway, and flat tees.

G. Installation

1. Raceway shall be installed with all appropriate fittings in accordance with the manufacturers installation instructions and in compliance with al appropriate codes. Raceway is to be plumb, square, level and in alignment with casework or furniture as required.

2.14 UNDERGROUND DUCT SYSTEM

A. Electrical Contractor shall furnish and install raceways and fittings for an underground duct system, as indicated on the drawings and specified herein.

B. Trade size of raceways shall be as per drawings for various systems.

C. Concrete, reinforcing rods, etc., shall be furnished and installed under this Section. The Electrical Contractor shall consult a structural engineer for proper placement and quantities of reinforcing rods.

D. Raceways shall transform from PVC to rigid steel conduit within 5'-0" of a manhole. Galvanized steel conduit shall be required within 10'-0" of either side of foundation wall. Electrical Contractor shall furnish and install proper coupling(s) to accommodate aforementioned transition.

E. Where offsets are required to clear obstructions and other underground services, a maximum of a 5° angle will be allowed at duct joints with prior approval of the Engineer.

F. Ducts shall be installed so as to drain to manholes.

G. All raceways as previously described shall utilize a mandrel of sufficient size to thoroughly clear raceways of all obstructions prior to installation of any wiring.

H. All concrete construction, excavation and backfill for the underground ductbank system shall be by the Construction Manager.

I. Warning tape shall be provided on all duct systems to indicate route during installation.

J. All conduits penetrating into the buildings shall be totally sealed, and waterproofing shall be applied on the conduit from face of the building to 5'-0" beyond in order to prevent any migration of water through the ductbank into the building.

K. Prior to backfilling of underground duct system, the Electrical Contractor shall provide a yellow (with black lettering) marking tape, 1'-0" from finished grade, stating, "Caution, Electric Line (Telephone, etc.) Buried Below". Tape shall be manufactured by Panduit or equal.

2.15 WIRING DEVICES

A. Furnish and install Federal Specification grade wiring devices, complete with all accessories as indicated on the drawings and as specified hereunder. All wiring devices shall be the product of a single manufacturer except where specifically stated otherwise.

B. Receptacles

1. Federal Specification (WC596) grade duplex receptacles shall be U-ground, rated for 125 volts, 20 amperes. Catalog numbers shall be as follows:

a.	Hubbell:	#HBL 5362
b.	Pass & Seymour:	#5362A
c.	Cooper:	#5362
d.	Bryant:	#BRY5362
e.	Leviton	#5362-*

2. Duplex receptacles with ground fault interrupter characteristics shall be U-ground, rated for 125 volts, 20 amperes, Federal Specification grade, feed-through type. Ground fault receptacles shall meet the requirements of UL 943, 2006. All receptacles in bathrooms/toilets, within 6'-0" of sink locations, exterior outlets, utility vault, in wet areas, etc. shall be ground fault type whether indicated on the drawings or not. Provide weatherproof covers for exterior outlets. Catalog numbers shall be as follows:

a.	Hubbell:	#HBL GF5362
b.	Pass & Seymour:	#2095
c.	Cooper:	#XGF20
d.	Bryant:	#GF53A
e.	Leviton	#7899-*

3. Special purpose receptacles shall be specification grade, back and side wired, U-ground. Catalog numbers shall be as shown on special purpose receptacle schedule on drawings.

C. Switches

1. Toggle switches shall be full size, heavy duty, AC type, rated for 120/277 volts, 20 amperes. Catalog numbers shall be as follows:

Manufacturer	Single Pole	3-Way	4-Way	Key Switches
Hubbell:	#HBL 1221	#HBL 1223	#HBL 1224	#HBL 1221-L
Pass & Seymour:	#PS20AC1	#PS20AC3	#PS20AC4	#PS20AC-L
Cooper:	#1991	#1993	#1994	#1991-L
Bryant:	#4901	#4903	#4904	#4900-L
Leviton	#1221-2*	#1223-2*	#1224-2*	#1221-2*L

2. Occupancy sensors

a. Single zone and two zone wall mounted occupancy sensors shall be dual technology type rated 1,200 watts at 277 volts or 800 watts at 120 volts and require no minimum load. Sensors shall be compatible with all load types, including electronic and compact fluorescent ballasts. Sensor shall have 180° field of view and shall cover up to 900 sq. ft. Sensor shall have an adjustable time delay from 30 seconds to 30 minutes and a manual "off" override. Manufacturer shall be as follows:

1) Pass & Seymour
2) Hubbell
3) Watt Stopper
4) Sensor Switch
5) Cooper Controls
6) Leviton

b. Wall sensors for loads in access of 1,200 watts at 277 volts or 800 watts at 120 volts shall utilize relay control of the branch circuit.

c. Ceiling mounted occupancy sensors shall be dual technology type rated 4,800 watts at 277 volts or 2,400 watts at 120 volts and require no minimum load. Sensors shall be compatible with all load types, including electronic and compact fluorescent ballasts. Sensor shall have 360° field of view and shall cover up to 1,000 sq.ft. Sensor shall have an adjustable time delay from 30 seconds to 30 minutes. Provide power packs and relay modules as required. Manufacturer shall be as follows:

1) Pass & Seymour
2) Hubbell
3) Watt Stopper
4) Sensor Switch
5) Cooper Controls
6) Leviton

d. All occupancy sensors shall include auxiliary contacts for use by ATC system.

3. Dimmers shall be 120 volt, 1,000 and 2,000 watts with slider control, color selected by Architect, manufactured by Lutron N2000 Series or approved equal. Wattage rating of light fixtures connected to the dimmer shall not exceed 80% of dimmer rating. Provide additional dimmer as required whether shown on drawings or not.

D. Color of all wiring devices shall be per the Architect and conform to the Owners Standards. Receptacles on emergency system shall be red.

E. Device plate shall be as follows:

1. All normal power wiring device plates shall be stainless steel with a smooth finish, type 302/304:

a.	Hubbell:	#S Series
b.	Pass & Seymour:	#SS Series
c.	Cooper:	#S Series
d.	Bryant:	#S6 Series
e.	Leviton	#840**-40

2. All Emergency branch power wiring device plates shall be stainless steel with a smooth finish, type 302/304 with red filled "LIFE SAFETY, CRITICAL, EQUIPMENT", respectively engraved in plate:

a.	Hubbell:	#S*ME Series
b.	Pass & Seymour:	#SS Series
c.	Cooper:	#S Series Engraved
d.	Bryant:	#S6* EM Series
e.	Leviton	#840**-E4

3. Heads of device plate screws shall be of the same material/color as the device plate.

PART 3 - EXECUTION

3.1 COOPERATION AND WORK PROGRESS

A. The Electrical work shall be carried on under the usual construction conditions, in conjunction with all other work at the site. The Electrical Contractor shall cooperate with the Architect, Construction Manager, all other Subcontractors and equipment suppliers working at the site. The Electrical Contractor shall coordinate the work and proceed in a manner so as not to delay the progress of the project.

B. The Electrical Contractor shall coordinate his work with the progress of the building and other Trades so that he will complete his work as soon as conditions permit and such that interruptions of the building functions will be at a minimum. Any overtime hours worked or additional costs incurred due to lack of or improper coordination with other Trades or the Owner by the Electrical Contractor, shall be assumed by him without any additional cost to the Owner.

C. The Electrical Contractor shall furnish information on all equipment that is furnished under this Section but installed under another Section to the installing Subcontractor as specified herein.

D. The Electrical Contractor shall provide all materials, equipment and workmanship to provide for adequate protection of all electrical equipment during the course of construction of the project. This shall also include protection from moisture and all foreign matter. The Electrical Contractor shall also be responsible for damage which he causes to the work of other Trades, and he shall remedy such injury at his own expense.

E. Waste materials shall be removed promptly from the premises. All material and equipment stored on the premises shall be kept in a neat and orderly fashion. Material

or equipment shall not be stored where exposed to the weather. The Electrical Contractor shall be responsible for the security, safekeeping and damages, including acts of vandalism, of all material and equipment stored at the job site.

F. The Electrical Contractor shall be responsible for unloading all electrical equipment and materials delivered to the site. This shall also include all large and heavy items or equipment which require hoisting. Consult with the Construction Manager for hoisting/crane requirements. During construction of the building, the Electrical Contractor shall provide additional protection against moisture, dust accumulation and physical damage of the main service and distribution equipment. This shall include furnishing and installing temporary heaters within these units, as approved, to evaporate excessive moisture and ventilate it from the room, as may be required.

G. It shall be the responsibility of the Electrical Contractor to coordinate the delivery of the electrical equipment to the project prior to the time installation of equipment will be required; but he shall also make sure such equipment is not delivered too far in advance of such required installation, to ensure that possible damage and deterioration of such equipment will not occur. Such equipment stored for an excessively long period of time (as determined in the opinion of the Architect) on the project site prior to installation may be subject to rejection by the Architect.

H. Prior to installation, the Electrical Contractor has the responsibility to coordinate the exact mounting arrangement and location of electrical equipment to allow proper space requirements as indicated in the NEC. Particular attention shall be given in the field to group installations. If it is questionable that sufficient space, conflict with the work of other Subcontractors, architectural or structural obstructions will result in an arrangement which will prevent proper access, operation or maintenance of the indicated equipment, the Electrical Contractor shall immediately notify the Contractor and not proceed with this part of the Contract work until definite instructions have been given to him by the Architect.

I. The Electrical Contractor shall obtain from the Plumbing and HVAC Subcontractors copies of all shop drawing prints showing the ductwork and piping installation as they will be put in place on the project. These drawings shall be thoroughly checked by the Electrical Contractor and the routing of all conduits and installation of all outlets and electrical equipment shall be coordinated with the ductwork and piping so as to prevent any installation conflict. Such coordination shall be done prior to roughing in conduits, outlets and electrical equipment.

J. Location of all wall outlets shall be verified with the Architect prior to roughing in conduits. Refer to details and wall elevations on the Architectural drawings. Mounting heights indicated on these drawings and/or specific dimensional information given to the Electrical Contractor by the Architect shall take precedence over such information indicated on the Electrical drawings.

K. Refer to all other drawings associated with this project. Any and all equipment which require an electrical supply circuit, switch, controls or connections, whether indicated on the Electrical drawings or not, shall be furnished and installed as directed by the Architect.

L. Refer to the Architectural drawings for areas in which the concrete slab is poured on grade. In these areas a waterproofing membrane will be installed on the grade fill or earth prior to pouring of slab. Electrical conduits shall be installed to avoid the necessity of penetrating this waterproofing membrane. Penetration of the membrane, if required, shall only be made when specifically allowed by the Architect, and shall be made only at locations directed by the Architect.

3.2 INSTALLATION

A. General

1. Unless specifically noted or indicated otherwise, all equipment and material specified in Part 2 of this specification or indicated on the drawings shall be installed under this Contract whether or not specifically itemized herein. This Section covers particular installation methods and requirements peculiar to certain items and classes or material and equipment.

2. The Electrical Contractor shall obtain detailed information from manufacturers of equipment provided under Part 2 of this specification as to proper methods of installation.

3. The Electrical Contractor shall obtain final roughing dimensions and other information as needed for complete installation of items furnished under other Sections or furnished by the Owner.

4. The Electrical Contractor shall keep fully informed of size, shape and position of openings required for material and equipment provided under this and other Sections. Ensure that openings required for work of this Section are coordinated with work of other Sections. Provide cutting and patching as necessary.

5. All miscellaneous hardware and support accessories, including support rods, nuts, bolts, screws and other such items, shall be of a galvanized or cadmium plated finish or of another approved rust-inhibiting coating.

6. Throughout this Section where reference is made to steel channel supports, it shall be understood to mean that the minimum size shall be 1 5/8" mild strip steel with minimum wall thickness of 0.105", similar to Unistrut P1000 or equal products manufactured by Kindorf or Husky Products Co.

B. Cable Assemblies - Prefabricated

1. Multiconductor cable assemblies shall be installed concealed only in areas as permitted in these specifications.

2. Multiconductor cable assemblies shall be run through openings in metal studs. The cable assembly shall be attached with approved clips to metal studs as follows:

a. 4'-0" on center for vertical runs
b. Within 12" of each outlet box

c. 6'-0" on center for horizontal runs

3. Where multiple runs of multiconductor cable assemblies are run together, all cables shall be bundled and secured together in a neat and workmanlike manner utilizing tie wraps, etc.

C. Conduits

1. Conduit shall be run concealed in finished areas above suspended ceilings, in wall spaces, etc. Exposed conduit runs in finished areas require Architect's approval. All conduit runs shall be properly grouped and installed parallel to walls, ceilings, etc., and supported with proper hangers, clamps, etc. Door swings shall be checked before installing back boxes for switches and receptacles.

2. Conduit bends shall be made with conduit bending machines or by an approved hickey. Lock nuts and insulated throat bushings of the compatible material shall be used to fasten conduit to outlet boxes, cabinets, etc.

3. Feeder and branch circuit conduit runs are not allowed in any floor slabs. Feeder and branch circuit conduit may run below the basement floor slab provided it is supported from the basement floor slab 5'-0" on center.

4. Separation of Wiring:

a. Raceways for the emergency branch, legally required and optional stand-by branch of the emergency electrical system shall be kept entirely independent of all other raceways and shall not enter the same raceways, boxes or cabinets with each other or other wiring, except in transfer switches.

b. Where a branch of the emergency system contains multiple transfer switches, raceways downstream from the two (or more) transfer switched shall be kept independent of each other.

5. No plastic conduit runs are allowed in any floor slabs. PVC Schedule 40 may be run below the lowest floor slab, provided it is encased in concrete and is supported from the lowest floor slab 5'-0" on center.

6. Conduit ends shall be cut square, threaded and reamed to remove burrs and sharp edges. Field threads shall be of the same type and have the same effective length as factory cut threads. Excessive exposed threads will not be allowed. Turns, wherever required in exposed conduit runs, shall be made by the use of factory-made bends, or field-made bends as approved. In condulets, or in the event of a multiplicity of conduits making the same turn, a steel junction box with a removable steel cover may be used. Offsets and bends for changes in elevation of exposed conduit runs shall be made at walls or beams and not in open spaces between walls or beams. Conduits shall be routed so as not to interfere with the operation or maintenance of any equipment. The entire job shall be done in a neat and workmanlike manner, as approved by the Architect. Steel supports or racks shall be galvanized steel channel and fittings.

7. All conduit work shall be carefully cleaned and dried inside before the installation of conductors. Wire shall not be pulled into conduit system until building roof and walls are weathertight and all rough spackling is completed. Plug conduit ends to exclude dust, moisture, plaster or mortar while building is under construction. No lubricants or cleaning agents which might have a deleterious effect on conductor coverings shall be used for drawing conductors into raceways.

8. Drawings, in relation to routing of conduits, are diagrammatic. Except where additional conduits may be required to avoid derating of branch circuits, as required elsewhere within this Section, the number and size of conduits and wire shall be furnished and installed as indicated by the drawings. Conduits shall be routed in the field so as to be coordinated with the building structure. Permanently concealed conduit shall be as short and direct as possible. Exposed conduit and conduit concealed by removable finishes such as accessible ceiling tile shall be run in straight lines parallel and perpendicular to walls, beams and columns and with right angle bends.

9. Conduits passing through floors, walls and beams shall be of such size, number and in such locations so as not to impair the strength of the construction.

10. Raceways in ceiling spaces shall be routed in such an approved manner as to eliminate or minimize the number of junction boxes required, but also shall be routed in an orderly and organized manner. Support rods and clamps shall be furnished and installed as directed by the Architect. Support of conduits by use of wire is strictly prohibited. Conduits shall be supported and secured by conduit support devices as approved by the Architect.

11. Electrical raceways that are part of the emergency distribution system shall be located in spaces fully protected by an approved automatic fire suppression system or in spaces with a two (2) hour fire resistance rating.

12. Where rigid metal conduit is threaded in the field, a standard conduit cutting die providing 3/4" taper per foot shall be employed. Threadless coupling shall not be used on rigid metal conduit except where specifically allowed by the Architect. Running threads shall not be used on rigid metal conduit. Compression fittings shall not be used with rigid steel conduit.

13. Conduit work shall be installed in such a manner to keep exposed threads to an absolute minimum, and in no case shall more than (3) threads be left exposed after the conduit work is made up tight.

14. Where conduits are exposed to the weather, PVC-RMC shall be provided. PVC – RMC shall be installed by a factory trained Certified installer. PVC-RMC fittings, exposed threads and damaged coatings shall be field coated with Thomas & Betts – OCAL “Heat Cure Patch”

15. Provide flexible conduits for connections to equipment furnished under HVAC, Plumbing Sections and other equipment as specified under Part 2 of this specification and where available space dictates; and where noise transmission

must be eliminated or reduced. Flexible conduit shall be liquid-tight except for connections to recessed lighting fixtures.

16. Conduit and EMT runs shall be mechanically and electrically continuous from service entrance equipment to distributing equipment. Conduit shall enter and be secured to cabinet, junction box, pull box or outlet box with locknut outside and bushing inside, or with liquid-tight, threaded, self-locking, cold-weld wedge adapter. Locknuts and bushings or self-locking adapters will not be required where conduits are screwed into tapped connections. Vertical conduit runs that terminate in bottoms of wall boxes or cabinets shall be protected from entrance of foreign material before installation of conductors.

17. Size of rigid steel conduit, intermediate metal conduit, electrical metallic tubing and flexible metallic conduit shall be as shown on the drawings.

18. For recessed mounted panels furnish and install three (3) 1” EMT conduits from each recessed panel and stub out 6” above nearest accessible ceiling.

19. Check raceway sizes to determine that green equipment ground conductor fits in same raceway with phase and neutral conductors to meet NEC percentage of fill requirements. Increase duct, conduit, tubing and raceway sizes shown or specified as required to accommodate conductors.

20. Conduit secured rigidly on opposite sides of building expansion joints and long runs of exposed conduit subject to stress shall have expansion fittings. Fittings shall safely deflect and expand to twice distance of structural movement. Provide separate external copper bonding jumper secured with grounding straps on each end of fitting.

21. Threaded sealing fittings for rigid steel conduits shall be zinc or cadmium-coated, cast or malleable iron. Sealing fittings for aluminum conduit shall be threaded cast aluminum. Fittings that prevent passage of water vapor shall be continuous drain. Install and seal fittings as required by manufacturer's recommendations. In concealed work, install fittings in flush steel box with blank cover plate.

    a. Install sealing fittings at following points, and elsewhere as shown:

        1) Where conduits enter or leave hazardous areas equipped with explosionproof lighting fixtures, switches, receptacles and other electrical devices.

        2) Where conduits pass from warm to cold locations.

        3) Where required by NEC.

    b. Secure conduit system as required by NEC.

22. A minimum 3/16" diameter, twisted nylon plastic type fish cord shall be furnished and installed in all empty raceways. Provide a tag and washer sized

larger than the conduit on each end of fish cord indicating the location of the other end.

23. All medium voltage raceways that are run exposed shall be painted red and shall have permanent white label on 5'-0" centers, indicating "DANGER - HIGH VOLTAGE - KEEP OUT".

D. Underground Conduits

1. Steel conduits in ground or on vapor barriers shall be field coated with asphaltum or shall have additional outside factory coating of polyvinyl chloride or phenolic-resin-epoxy material or other equally flexible and chemical resistant material. Couplings and damaged areas of coated conduits shall be field-coated with same compound as conduits. Joints shall be threaded.

2. Joints in conduits and fittings shall be watertight and shall meet the requirements of manufacturer's installation recommendations. Threaded portions of steel conduits not encased in concrete, and adjoining ends of conduits, couplings and fittings shall be coated with asphaltum after installation. Connections between conduits of different types shall be made in an approved manner, using adapters and other materials and methods recommended by conduit manufacturers.

3. Where nonmetallic underground conduit enters the building and continues inside to the main electric service, pull box, cabinet or other electrical apparatus, the portion of the conduit that passes through the floor or wall and the remainder of the raceway inside the building shall be steel. Provide an adapter outside the building (5'-0" beyond building wall minimum) wall to connect plastic and metal conduit.

4. All metal conduit buried in the earth or fill shall be coated with (2) coats of heavy asphalt paint or PVC coated over its entire length, including couplings.

5. Where underground conduit enters the building through membrane-waterproofed wall or floor, provide a malleable iron seal with gland assembly and adjustable pressure bushings secured to masonry construction with (1) or more integral flanges. Membrane waterproofing shall be secured to device in a watertight manner.

6. Where underground conduit, without concrete envelope, enters the building through non-waterproofed wall or floor, provide Schedule 40 galvanized pipe sleeve. Fill space between conduit and sleeve with suitable plastic expandable compound or oakum and lead joint on each side of wall or floor.

7. Excavation, shoring, bracing, backfilling and grading will be provided by the Construction Manager. Trenches shall be evenly graded so that conduits slope uniformly a minimum 3" per 100'-0", without horizontal or vertical waves. Unless specified otherwise, conduit shall slope uniformly from (1) manhole to the next or from a high point between manholes to prevent pooling of water. Conduits run from building to manhole shall slope toward manhole to avoid

water draining into the building. Avoid low points between manholes or upturned elbows.

8. Run conduits straight between manholes and upturned elbows. Unavoidable bends in nonmetallic conduits shall be made by assembling couplings at a slight angle if resulting radius is at least 100'-0". For radii less than 100'-0", use 5° angle couplings or 5° factory-made bend sections. Conduit shall terminate in end bells where raceway enters manholes. All conduit bends for telecommunication ductbanks shall be 12'-6" radius sweeps. Conduit bends for power cable conduits shall be minimum 36" radius.

9. Support multiple conduit runs and banks on preformed nonmetallic spacing block separators on 4'-0" centers. Separator containing metal shall have metal non-continuous and shall not form a magnetic loop. Unless otherwise shown on the drawings, spacing between exterior surfaces of conduits shall be as follows:

   a. 2" between telephone conduits

   b. 2" between conduits containing cables operating at 600 volts or less

   c. 12" between telephone conduit and power conduit in the same concrete envelope

   d. 2 1/2" between conduits containing cables operating at more than 600 volts

   e. Space conduit separators to prevent sagging of raceway and breaking of couplings and watertight seals, to maintain deformation of conduit at separators to 0.10" or less. Secure with cords where necessary. Do not use tie wires, reinforcing rods or other metallic materials.

10. Stagger conduit couplings so that couplings on adjacent conduits do not lie on the same transverse plane. Space end bells 9" center-to-center at manhole wall face for 4" conduits and space proportionately for other sizes. Transition to end bell spacing shall start 10'-0" from face of manhole wall. Conduit slope shall equal that of main bank. Make new conduit entrances into manholes and building walls consistent with grading requirements and entrances. Waterproof all conduit entrances into manholes and buildings as required by the Architect.

11. Where underground metallic conduits pass below the grade level floor, they shall be supported every 5'-0" from the concrete floor. Plastic conduits run below the grade level floor shall be encased in concrete and shall be supported every 5’-0” form the concrete floor.

12. Concrete for conduit envelopes shall be as required or as specified under Division 03. Concrete shall extend a minimum 3" beyond exterior surface of each conduit in bank. Coordinate work of this Section with that of Division 03.

13. Concrete envelopes between manholes, or between manhole and building, shall be poured in a single operation. Where more than (1) pour is necessary, provide 3/4" reinforcing rod dowels extending 18" into concrete on each side of joint.

Dowels shall be coated with bonded adhesive prior to the second pour. Concrete envelopes installed over extensive area of disturbed earth shall have a separate concrete base.

14. Concrete envelopes that cross other conduits or pipelines or are run under roads and driveways shall be reinforced. Provide reinforcement where envelopes connect to manhole and building walls. Concrete envelopes that terminate for future extension shall have dowels as specified for joints between pours. Reinforcement shall be as required; consult with Structural Engineer.

15. Trenches shall not be backfilled until concrete envelopes have had sufficient time to set. After concrete envelopes have set, nonmetallic conduits shall be cleared with mandrel of the same size as the conduit.

16. Where conduits cross under existing roadways, walks or other paved areas, steel conduits may be driven instead of conduits in trenches. After installation, paved grass areas and other areas disturbed shall be restored to original condition.

17. Cap ends of spare conduits 5'-0" beyond pavement and protect them from mechanical damage. Mark the location of conduit ends with concrete monuments, 6" in diameter by 18" long, set flush in the ground with "S/C" indented in the top.

18. Arrange multiple conduits as shown on the drawings. Make minor changes in location, or cross-sectional arrangement as necessary. Where conduit runs cannot be installed as shown because of conditions not discoverable prior to digging of trenches, request the Architect's instructions before further work is done. Coordinate this work with other outside service work.

19. Seal active and spare conduits that enter the building with oakum or other plastic expandable compound until conductors are ready for installation.

E. Pull, Junction and Outlet Boxes

1. The Electrical Contractor shall furnish and install pull boxes for all feeders as required by NEC. Pull boxes shall be code gauge steel plates fastened to angle iron frames with removable covers. Covers shall be secured with brass machine screws.

2. The Electrical Contractor shall furnish and install junction boxes for feeders and branch circuits as required. Boxes shall be sized in accordance with NEC. Junction boxes shall be code gauge steel with removable covers. Covers shall be secured with brass machine screws.

3. The Electrical Contractor shall furnish and install outlet boxes for all wiring devices. Bar hanger type outlet boxes shall be used in hollow frame partitions, other than masonry or construction block partitions. For metal stud partitions, bar hanger shall be secured with self-threading metal screws or bar box hangers that engage 2 or more studs.

4. Pull, junction or outlet boxes for emergency branch, legally required and optional stand-by branch of the emergency electrical system shall be kept entirely independent of all other pull, junction or outlet boxes. Wiring, devices and equipment shall not enter the same raceways, boxes or cabinets with each other or other wiring, except in transfer switches. Barriers installed in pull, junction or outlet boxes shall not be acceptable.

5. Through-the-wall outlet boxes shall not be permitted. Outlet boxes shall not be installed back-to-back but shall be staggered on opposite sides of partitions a minimum of 12" on center.

6. If any discrepancies regarding the locations of outlet boxes are found to exist between the Electrical drawings and any other drawings associated with the project, notify the Architect at once and have location verified before outlets are installed. Any reasonable change in location of outlets prior to roughing shall not involve additional expense to the Owner. The term "reasonable" shall be interpreted as moving outlet locations a maximum of 10'-0" in any direction from the location indicated on the drawings.

7. Whenever outlet boxes of any system are installed in brick, masonry or concrete construction, furnish and install the necessary boxes and conduit in connection therewith so that the Contractor may build them in as the work progresses. Box offsets shall be made at all outlets to provide for proper adjustment to finished surfaces.

8. The Electrical Contractor is responsible for cutting openings in brick, tile and all types of construction blocks at outlets. Exposed mortar shall not be permitted around device plates.

9. All boxes shall be rigidly mounted to construction and shall be equipped with suitable screw fastened covers. Unused open knockouts in all boxes shall be plugged with suitable blanking devices. All boxes installed that do not have equipment mounted on them shall be provided with blank covers.

F. Cutting, Patching and Conduit Sleeves

1. The Electrical Contractor shall be responsible for all core drilling required for his work, but in no case shall he cut into any structural elements without the written approval of the Architect.

2. All cutting, rough patching and finish patching required for electrical work shall be provided by the Electrical Contractor.

3. All concrete and masonry equipment bases and pads, concrete duct banks, curbs, chases, pockets and openings required for the proper installation of the work under this Contract will be provided by the Construction Manager, using dimensions, templates, bolts, anchors, as required by the manufacturer's installation details of the various equipment.

4. Where conduits pass through masonry or concrete walls, foundations or floors, the Electrical Contractor shall set such sleeves as are necessary for passage of the conduits. Sleeves shall be of sufficient size to provide air space around the conduit passing through for fireproofing. The Electrical Contractor shall be responsible for the exact location of sleeves provided under his Contract.

5. Conduit passing through exterior walls and floors below grade shall be made watertight with caulking compound and pipe sleeves with wall collar located at the center of the wall extending 8" all around the conduit. Collar shall be 1/8" thick steel welded to sleeve. Coordinate material requirements with the Contractor.

6. Sleeves and inserts shall not be used in any portions of the building where their use would impair strength or construction features of the building. Elimination of sleeves must be approved by Architect.

7. Pipe sleeves shall be Schedule 40 galvanized steel and shall be set, as follows:

   a. Set sleeves 6" above finish floor and flush on each side of walls.

   b. Set sleeves 6" above finished floor and flush on each side of walls and electric room floors.

   c. Sleeves in walls and partitions shall terminate flush with finished floor.

   d. Sleeves shall be set securely in place before concrete is poured.

   e. Sleeves shall be minimum 2" larger in diameter than the pipe passing through it.

8. Conduits passing through fire partitions shall be provided with 10 gauge steel pipe sleeves and firestopped.

9. All cutting and patching required by the Electrical Contractor in finished areas which require access shall have access panels as specified elsewhere in this specification.

10. Fill for floor penetrations shall be fire-resistant, compatible with floor material and finished to prevent passage of water, smoke and fumes. Fill in walls shall be similar to wall material, shall be fire-resistant in fire walls, and shall prevent passage of air, smoke and fumes. Fill spaces in openings after installation of conduit or cable. All fireproofing inside sleeves shall be by the Electrical Contractor. Fireproofing required outside of sleeves shall be by the Construction Manager.

11. Where conduits passing through openings are exposed in finished rooms, finishes of filling materials shall match and be flush with adjoining floor, ceiling and wall finishes.

12. Fill slots, sleeves and other openings in floors and walls if opening is not used. Identify unused sleeves and slots for future installation.

13. Lay out conduit and openings in advance, to permit provision in work. Set sleeves and conduit in forms before concrete is poured. Provide remedial work where sleeves and conduits are omitted or improperly placed.

14. Bus duct penetrations through floors shall have concrete curbs built around the floor openings, 3" minimum height.

G. Feeder and Branch Circuit Conductors (600 Volts)

1. Install wire and cable in approved raceways as specified and as approved by Authorities that have jurisdiction. Surface metal raceways shall not be used unless explicitly specified and shown on the drawings. Do not use surface raceways on floor.

2. All feeder, branch circuit or auxiliary system wiring passing through pull boxes and/or being made up in panelboards shall be properly grouped, bound and tied together in a neat and orderly manner in keeping with the highest standards of the Trade, with plastic cable ties. Loose ends of the cable ties shall be properly trimmed after making up same. Cable ties shall be Ty-Raps, as manufactured by Thomas & Betts, Holub Industries, Inc., Quick-Wrap, Burndy Unirap or equal.

3. For large size conductors available only in black, use colored plastic tape at all ends, where connections and splices are made and in all pull boxes for the specified color code identification. Tape shall be wrapped around the conductor (3) complete turns.

4. Tags or labels shall be stamped or printed to correspond with markings on the drawings or marked so that feeder or cable may be identified readily. If suspended tags are provided, attach with 1/32" diameter, nylon, 55 pound test monofilament line or slip-free plastic cable lacing unit.

5. The number and size of conductors in each run of conduit is indicated on the drawings. Where there is a conflict between the number of wires indicated and the actual number required, the actual number and size shall be installed.

6. Provide 1/4" polyethylene ropes for pulling wire. Provide wire pulling lubricants that meet applicable UL requirements as necessary.

7. Cable supports shall be provided for vertical feeders every other floor or every 40’-0” whichever is less and as required by NEC 300.19. Vertical support boxes shall be located as high above finished floor as possible, while still maintaining proper access.

8. Provide split wedge cable supports with clamps for cable without metallic sheath in pull boxes. Supports shall be as manufactured by O.Z./Gedney or approved equal.

9. Wire from point of service connection to receptacles, lighting fixtures, devices, equipment, outlets for future extension, and other electrical apparatus as shown on the drawings. Provide slack wire for connections where required. Tape ends of wires and provide blank covers for outlet boxes designed for future use.

10. Conductors #10 and smaller in branch circuit panelboards, signal cabinets, signal control boards in switchboards and motor control centers shall be bundled.

11. The branch circuit wiring shall include a separate neutral conductor for each 120 volt and 277 volt circuit. Home runs may be combined in a common raceway provided that no more than three phase conductors (each of a different phase leg), three neutral conductors and one ground conductor are installed in the same conduit.

12. Follow homerun circuit numbers shown on the drawings to connect circuits to panelboards. Where homerun circuit numbers are not shown on the drawings, divide similar types of connected loads among phase busses so that currents in each phase are within 10% of each other during normal usage.

13. Branch circuits and auxiliary system wiring shall be peeled out of the wiring gutters at the terminal cabinet and panels at 90° to circuit breakers and terminal lugs for connecting to same.

14. Joints and splices shall be made in an approved manner and shall be equivalent, electrically and mechanically, to the conductor insulation. All conductors shall be connected by use of solderless crimp (compression) type connectors; these joints and splices shall be taped with (1) wrap of varnish cambric tape and then a minimum of (3) wraps of No. 88 Scotchbrand (3M Company) all-weather vinyl plastic electrical tape, or equal Permacel or Plymouth Co. Each wrap of tape shall be half-lapped. Conductors of size #4 AWG or larger shall have (2) coats of insulating varnish applied over the tape for joints in manholes, handholes or exposed-to-weather conditions.

15. Provide nonferrous identifying tags or pressure-sensitive labels for cables, feeders, and power circuits in pull boxes, manholes and switchboard rooms, at cable termination and in other locations.

16. All branch circuits shall be connected to breakers at Electrical Contractor's discretion. The balancing of all loads between phases shall be the Electrical Contractor's responsibility.

17. Splices, taps and lugs shall be electrically and mechanically secure and solderless lugs, and crimp connectors shall be used. Lugs shall be used for conductor sizes #8 AWG and larger. All lugs shall be of the proper size, and in no case shall strands be cut from a conductor in order to fit the conductor into a lug. Provide lug/cable adapters for breakers where oversized cables are indicated. All lug connections to buses in switchboards, unit substations, motor control centers, etc., shall be 2-bolt/nut connections.

18. All wiring shall be installed and supported in accordance with the requirements of the NEC.

19. Phase Arrangement

    a. The Electrical Contractor shall ensure that phase arrangement of bus bars in all distribution equipment remain consistent throughout the project from the service entrance equipment and stand-by generator(s) to all switchgear, distribution panels, automatic transfer switches, transformers, motor control centers, lighting and receptacle branch circuit panels, enclosed circuit breakers, disconnect switches, etc.

    b. For all three phase equipment, the bus bars shall be arranged “A”, “B”, “C”, from front-to-back and/or top-to-bottom and/or left-to-right as viewed from the front of the equipment. Proper color coding shall be consistent throughout.

    c. For 480 volt and 208 volt single phase equipment, the bus bars shall be arranged “A”, “B”; “A”, “C”; or “B”, “C”, as appropriate, from front-to-back and/or top-to-bottom and/or left-to-right as viewed from the front of the equipment. Proper color coding shall be consistent throughout.

H. Medium Voltage Conductors

1. Provide the voltage rating, size, conductor material and number of cables indicated on the drawings.

2. Install cable identification tags on each cable at each point of access.

3. Install cables in continuous lengths whenever possible. Splices are permitted only at manholes and other points of access.

4. While pulling the cable, the maximum pulling tension as provided by the cable manufacturer shall not be exceeded. The pulling tension shall be monitored using dynamometer and recorded.

5. While pulling the cable, each individual conductor shall be attached to the pulling lead with the ball bearing swivel enabling each conductor to turn independently while being pulled.

6. While pulling the cable, cable lubricating compound(s) as recommended by manufacturer shall be used.

7. While pulling, each cable in the set shall be positively identified by a method selected by Construction Manager.

8. Provide continuous insulation shielding through all splices and ground shielding at each splice and termination unless otherwise indicated on drawings.

9. In manholes or other accessible common enclosures, wrap each cable with fire retardant tape in accordance with manufacturer's instructions. To prevent unraveling, the fireproofing tape shall be random wrapped the entire length of the fireproofing with pressure sensitive glass cloth electrical tape.

I. Mineral Insulated (MI) Metal-Sheathed Cable

1. Install products in accordance with manufacturer’s instructions.

2. Bending:

a. Not less than five (5) times the cable diameter for cable not more than ¾ inch (250 kcMIL).

b. Not less than ten (10) times the cable diameter for cable more than ¾ inch (350 and 500 kcMIL).

3. Pulling:

a. For all cables up to and including #1 AWG use ten inch (250mm) or larger sheaves.

b. For #1/0 through 250 kcMIL inclusive, use 18 inch (460mm) or larger sheaves.

c. For 350 kcMIL and larger cables, use 24 inch (590mm) or larger sheaves.

d. On pulls of over 360 degrees, contact manufacturer for assistance.

e. 350 and 500 kcMIL cables shall not be pulled more than 360 degrees in total.

4. Splicing:

a. All fire rated splices shall be made in the factory.

b. In the event a field splice is necessary, it must be made within a 2 hour fire rated room, approved by the engineer and:

1) Made in the field by manufacturer’s field technician, or

2) Made in the field by personnel trained by the cable manufacturer using manufacturer’s components.

5. Terminations:

a. Field made terminations shall be made with cable manufacturer’s termination kits only. Stripping tools, crimping and compression tools available from the manufacturer shall be used for proper cable termination.

b. Terminations must be completed immediately once started to avoid moisture ingress from surrounding air. Prior to completing each termination, test insulation resistance and follow manufacturer's drying procedures until insulation resistance reaches an acceptable level.

c. Connections to ferrous cabinets for single conductor cables shall incorporate brass plates 1/4 inch (6mm) thick by 4 inch (100mm) wide by length as required with 1/2 inch (12mm), 3/4 inch (19mm), 1 inch (25mm) or 1 1/4 inch (32mm) drilled and tapped holes. Install per manufacturers' drawing.

6. Sheath induction reduction:

a. When multi-phase circuits have paralleled single conductors, cables shall be run in groups having one of each phase in each group.

b. Each set of paralleled conductors shall be separated by at least two single cable diameters.

c. On balanced three-phase wye circuits neutral conductors may be located within the two cable diameter space between groups of phase conductors.

d. Each group of cables shall be fastened tightly together, at least once between each cable support on horizontal runs and twice on vertical runs, using ½ inch (13mm) wide by 0.030 inch (0.75mm) thick stainless steel straps.

7. Exposed or Surface installations:

a. Cable may be secured directly to fire rated building structure using an approved method such as one, or any combination, of the following:

1) Straps: ½ inch (13mm) wide x 3 1/2 inch (38mm) long by 0.030 (0.75mm) thick stainless steel or copper straps. Each strap shall contain two ¼ inch (6mm) holes for securing with 3/16 inch (5mm) by minimum 1 3/4 inch (44mm) long steel anchors.

2) Steel struts and cable tray: Use only the steel strut framing system and support recommended by Pyrotenax. Aluminum or other materials are not acceptable.

b. Supports shall not exceed three (3) feet on center horizontally, or six (6) feet vertically.

c. Cables shall be installed parallel to building lines.

8. Embedded Installations:

a. Cables will be run in the same trifoil configuration as exposed installations.

b. Protect against damage during pulling, and during concrete pouring or backfill and tamping.

c. Where cables emerge from grade, provide PVC conduit, metal plate or angle iron. This protection shall minimally extend from 18 inches (460mm) below grade to 8 ft. (2.5m) above grade.

9. Wall or floor penetrations:

a. Provide sleeve to protect cable and penetration opening during pulling.

b. Provide approved fire stopping of all penetrations.

10. Neatly train and lace cable inside boxes, equipment, and panelboards.

11. Field Quality Control

a. Inspect cable for physical damage and proper connection.

b. Measure tightness of bolted connections and compare torque measurements with manufacturer's recommended values.

c. Verify continuity of each conductor.

d. Prior to energizing cables, measure insulation resistance of each cable. Tabulate and submit for approval.

e. Provide certification from cable manufacturer that installation is in accordance with their requirements.

J. Wiring Devices

1. All wiring devices shall be installed in appropriately sized outlet boxes. Where more than (1) switch or a double duplex receptacle is indicated on the drawings multiple gang outlet boxes shall be provided to accept all devices in the area. Separate boxes are required for wiring devices on emergency circuit, ganging of boxes, using barriers, are not acceptable.

2. All duplex receptacles shall be mounted vertically with the grounding post on the top side of the outlet as viewed from the front.

3. Each and every receptacle either wall or raceway mounted, shall have panel and circuit identification engraved on their faceplates.

4. All toggle switches, single pole, 3-way and 4-way, shall be so installed such that, when all switch posts are in the down position, the lights are off.

5. All device plate screws shall be colored alike to the device plates. All screws shall be installed "finger-tight" to avoid damage to device plate.

3.3 ELEVATOR AND RELATED WORK

A. Furnish and install all power and control wiring as required by the elevator manufacturer. Consult elevator manufacturer and obtain final accepted elevator shop drawings prior to installing feeders, disconnect switches, elevator pit light/receptacles, telephone empty conduits, 120 volt control power circuits for the machine room and control wiring for selective operation of elevators when the building power system is derived from the generators.

B. The elevator machine safety switch shall contain a normally closed, dry auxiliary contact that opens when the safety switch opens. The Electrical Contractor shall run a pair of wires between the auxiliary contact in the safety switch to the respective elevator controller to avoid activation of elevator recall function when the safety switch is in the open position.

C. All feeders and branch circuit wiring to elevator machine rooms, including the elevator machine, cab lighting, etc. shall be installed in two (2) hour fire rated construction or shall be Pyrotenax System 1850 MI cable for its entire length.

D. The circuit breaker for the elevator machine shall include a shunt-trip mechanism with a normally closed, dry auxiliary contact. The auxiliary contact shall open when the circuit breaker is shunt-tripped or open manually. The contact shall remain closed when the circuit breaker is tripped on overload or short circuit. Provide control wiring, in conduit, from the shunt trip mechanism and from the auxiliary contact on each elevator machine circuit breaker to the elevator controller in the machine room for use by the elevator manufacturer. Consult elevator manufacturer for size and amount of control wiring.

E. Provide control wiring from each elevator dispatcher (one per elevator bank) to the automatic transfer switch serving the elevators for selective operation of elevators when on emergency power. Provide control wiring from each elevator dispatcher (one per elevator bank) to the automatic transfer switch serving the elevators to send a signal to the elevators prior to transferring in either direction, when both sources are energized.

3.4 FIRE PUMP AND RELATED WORK

A. Furnish and install all power and control wiring as required by the fire pump manufacturer. Consult fire pump manufacturer and obtain final accepted fire pump shop drawings prior to installing feeders, fire pump circuit breaker, 120 volt control power circuits and control wiring from the fire pump transfer switch to the emergency generator start circuit.

B. Provide control wiring from the fire pump controller to the emergency generator start circuit.

C. The following feeders and control wiring shall be installed in two (2) hour fire rated construction or shall be Pyrotenax System 1850 MI cable for its entire length:

1. Feeder wiring between the fire pump circuit breaker and the fire pump controller.

2. Feeder wiring between the emergency power distribution panel and the fire pump controller.

3. Control wiring between the generator start circuit at the fire pump controller and emergency generator.

D. Refer to specification Section 26 2010 for requirements for fire pump circuit breaker.

3.5 GAS ALARMS, OIL TANK ALARMS, WIRING AND CONNECTION

A. The Electrical Contractor shall furnish and install conduit and power wiring, etc. indicated on the drawings and as required by the Plumbing and HVAC Trades, connections to alarm panels, remote alarms, etc. Also, refer to HVAC and Plumbing drawings for location and numbers of panels/alarms to be connected. All wiring shall be per the manufacturer's recommendations.

3.6 MATERIALS AND WORKMANSHIP

A. All materials and equipment shall be new and unused and shall meet requirements of the latest Standards of NEMA, UL, IPCEA, ANSI and IEEE. Equipment shall have components required or recommended by OSHA, applicable NFPA documents and shall be UL listed and labeled.

B. Despite references in the specifications or on the drawings to materials or pieces of equipment by name, make or catalog number, such references shall be interpreted as establishing standards of quality for materials and performance.

C. Finish of materials, components and equipment shall not be less than Industry good practice. When material or equipment is visible or subject to corrosive or atmospheric conditions, the finish shall be as approved by the Architect.

D. Provide proper access to material or equipment that requires inspection, replacement, repair or service. If proper access cannot be provided, confer with the Architect as to the best method of approach to minimize effects of reduced access.

E. All work shall be installed in a neat and workmanlike manner and shall be done in accordance with all Local and State Codes.

F. The Owner will not be responsible for material, equipment or the installation of same before testing and acceptance.

3.7 REQUIREMENTS FOR EMERGENCY SYSTEMS WIRING

A. All feeder wiring for the emergency and legally required systems shall be installed in spaces or areas that are fully protected by and automatic fire suppression system. Feeders that are not protected by an automatic fire suppression system, such as feeders running horizontally above finished ceilings, shall be installed within dedicated 2-hour fire rated rooms, closets or shafts or shall be a listed 2 hour fire rated assembly, such as MI cable.

B. All feeder and branch circuit wiring for each system of the emergency and legally required systems shall be kept entirely independent of all other wiring, devices and equipment, and shall not enter the same raceways, boxes or cabinets with each other or other wiring, except as specifically allowed by the Code.

C. Where multiple transfer switches are provided for the same branch of emergency power, all wiring between the multiple systems shall be kept entirely independent of each other and all other branches of emergency power.

3.8 EQUIPMENT CONNECTIONS

A. Motors furnished under Heating, Ventilating and Air Conditioning Section and the Plumbing Section shall be 460 volts, 3 phase, 60 Hz for motors 1/2 HP and above, except as indicated otherwise on the drawings.

B. Kitchen equipment motors, heating elements, shop equipment and miscellaneous items will be of a voltage and phase as indicated on the drawings.

C. Make all final connections to equipment. Special plugs for receptacles indicated on the special purpose receptacle schedule shall be connected to the cord of the equipment, where this equipment is available to the Electrical Contractor prior to the completion of the work; otherwise the plug shall be delivered to the Owner.

D. Equipment grounding integrity of all equipment and non-current-carrying metal parts must be ensured.

E. All equipment requiring electrical connections which is furnished under other Sections and by others shall be connected under this Section.

F. Before connecting any piece of equipment, check the nameplate rating against the information shown on the drawings and call to the attention of the Architect any discrepancies.

G. The Electrical Contractor shall carefully study all equipment manufacturer's wiring diagrams and make corrections accordingly.

H. The Electrical Contractor shall be held responsible for any damage done to motors or equipment driven by motors, due to incorrect direction of rotation, caused by faulty electrical connections, and incorrectly sized motor circuit protection, furnished under this Contract.

I. Drawings and specifications of other Subcontractors and equipment suppliers furnishing motors shall be consulted for verification of size, speed and operation.

J. Motor and equipment disconnect switches indicated on the drawings are attached to the motor symbol and are indicated this way for drafting convenience only. All such switches shall not be attached to the motor itself, but shall be mounted adjacent to the motor and supported independent of the motor.

K. Motor starters furnished by other Subcontractors shall be furnished complete with individual running overcurrent protection in each phase and shall be installed and wired by the Electrical Contractor. Sizing of motor running overcurrent protection for starters furnished by others shall be the responsibility of the Subcontractor who furnishes the motor starter. Motor starters for motor control centers shall be furnished complete under this Section. Refer to schedules on the drawings.

L. Furnish, install, wire and connect all motor disconnect switches, motor starters and remote control stations, except as otherwise indicated on the drawings. All automatic temperature control wiring for equipment furnished by the HVAC Subcontractor will be furnished and installed under Heating, Ventilating and Air Conditioning Section, except as otherwise indicated on the Electrical drawings.

M. Motor starters, where grouped, shall be mounted on 3/4" thick, exterior grade plywood mounting board painted with fire-resistant paint of a color to match starter enclosures. Coordinate backboards with Division 06, Wood, Plastics and Composites.

N. On multi-speed motors, the isolating switches at the motor location shall be so interlocked or shall be of such a type that operation of (1) switch shall simultaneously open all conductors to the motor.

O. All electrical connections to vibration isolated equipment shall be by flexible conduit of length at least 15 diameters, installed with visible slack, or in a loop configuration, to allow free movement of the equipment and prevent transmission of noise and vibration.

END OF SECTION

SECTION 260548 – VIBRATION AND SEISMIC CONTROLS FOR ELECTRICAL SYSTEMS

PART 1 - GENERAL

1.1 RELATED DOCUMENTS

A. All of the Contract documents, as listed on the Table of Contents and including General and Supplementary Conditions and Division 01, General Requirements, shall be included in, and made part of, this Section.

1.2 DESCRIPTION OF WORK

A. Seismic restraints

1. Furnish and install necessary seismic restraints for electrical equipment in accordance with the Connecticut State Building Code and the requirements of this specification.

2. Seismic restraints shall be provided for both vibration isolated equipment and conduit as well as non-isolated equipment and conduit.

B. Vibration Isolation

1. Furnish and install vibration isolation materials and equipment to eliminate excessive noise and vibration from building electrical systems. Include adjustment of each isolation system and the measurement of system performance.

C. The work in this Section shall include seismic restraints and vibration isolation controls for the following:

1. Conduits and raceways, including hangers and supports.

2. Automatic transfer switches

3. Medium voltage distribution equipment

4. Secondary unit substations

5. Low voltage distribution equipment

6. Lighting fixtures

7. Fire alarm system

1.3 RELATED WORK

A. For work to be included as part of this section, to be furnished and installed by the Electrical Contractor, refer to the Related Work section of Specification Section 26 0510.

B. Attention is directed to the provisions of Section 13 4800 regarding seismic restraints and vibration control required for the work under this Contract. The Electrical Contractor shall review the requirements and coordinate the system installation.

C. Carefully examine all of the Contract Documents, criteria sheets and all other Sections of the specifications for requirements which affect work under this Section, whether or not such work is specifically mentioned in this Section.

D. Coordinate work with that of all other Trades affecting or affected by the work of this Section. Cooperate with such Trades to assure the steady progress of all work under the Contract.

1.4 REFERENCES

A. Applicable provisions of the following Codes and Trade Standard Publications shall apply to the work of this Section, and are hereby incorporated into, and made a part of the Contract Documents:

1. NFPA 70: National Electrical Code
2. NFPA 72: National Fire Alarm Code
3. NFPA 99: Health Care Facilities
4. NFPA 101: Life Safety Code
5. Occupational Safety and Health Standards
6. National Fire Protection Association
7. International Building Code (IBC)
8. Connecticut Building Code
9. Connecticut Electrical Code

B. Material standards shall be as specified or detailed hereinafter and as follows:

1. NEBB-1977 – Procedural Standards for Measuring Sound and Vibration; National Environmental Balancing Bureau; 1977.

2. NEBB-1977 – Sound and Vibration in Environmental Systems; National Environmental Balancing Bureau – 1977.

1.5 ACCEPTABLE MANUFACTURERS

A. Products numbers listed in these specifications are those of Mason Industries, and are used to establish minimum standard. Other acceptable manufacturers shall be:

1. Mason Industries (MI)

2. Amber/Booth (AB)

3. Kinetics Noise Control (KNC)

4. Vibration Eliminator Co. (VEC)

5. Vibration Mountings & Controls (VMC)

6. Novia Associates, Inc.

1.6 SUBMITTALS

A. Prepare and submit shop drawings in accordance with the requirements hereinbefore specified, and with Section 01 3300 – Submittal Procedures in the manner described therein, modified as noted hereinafter.

B. The submittal shall be prepared and stamped by a Structural Engineer registered in the State of Connecticut.

C. Seismic Restraints

1. A seismic restraint Action Submittal shall be prepared for all systems and equipment covered by this section.

2. The following information shall be included for each piece of equipment or system:

a. Dimensions, weight and center of gravity.

b. The seismic restraint detail, including anchoring methods appropriate for the supporting structure.

c. The seismic restraint detail shall be derived from one of the following:

1) Calculations showing demand lateral loading, restraint loading, and design of restraint and connections.

2) Application of a pre-calculated seismic restraint system applicable for the required loads and carrying the approval of ICBO.

3) Application of a pre-calculated seismic restraint detail for the applicable loads provided by the equipment manufacturer and carrying the approval of ICBO.

d. Documentation of approval for applications.

e. Anchors to concrete shall be specified in detail, including any testing requirements, and shall have ICBO Approval for the specific application.

f. Reaction loads to structure.

g. Layouts of seismic restraints for conduit, busways, etc. or specific instructions for determination of layout and appropriate bracing detail in the field.

D. Vibration Isolation

1. The Vibration Isolation Submittal shall include descriptive data for all products and materials including the following:

   a. Product Descriptions

      1) A complete description of products to be supplied, including product data, model number, dimensions, specifications and installation instructions.

   b. An itemized list of isolated and non-isolated equipment. Detailed schedule and selection data for each vibration isolator and seismic restraint supporting equipment, including:

      1) Equipment identification mark

      2) Isolator type

      3) Actual load

      4) Static deflection expected under actual load

      5) Specified minimum static deflection

      6) Additional deflection-to-solid under load

      7) Ratio of spring height under load to spring diameter

      8) Base type

      9) Seismic restraint type

   c. Steel rails, steel base frames, and concrete inertia bases showing steel work, reinforcing, vibration isolator mounting attachment method, and location of equipment attachment bolts.

   d. Show equipment base construction for equipment, including dimensions, structural member sizes and support point locations.

   e. Indicate isolation devices selected with complete dimensional and deflection data.

   f. Show methods of suspension and support for ceiling hung equipment.

   g. Detail methods of isolation for conduits, busways, etc. piercing walls and slabs.

   h. Provide special details necessary to convey complete understanding of the work to be performed.

E. The submittal shall be reviewed for completeness and use of applicable criteria by the Design Professional in charge of this section. The reaction loads to structure shall be approved by the project Structural Engineer.

F. Submission of samples may be requested for each type of seismic restraint. Samples will be returned for use at the job site if requested. Costs associated with submission of samples shall be borne by the Contractor.

1.7 QUALITY ASSURANCE

A. Attention is directed to the provisions of Section 01 4000 regarding quality requirements for the work under this Contract. The Electrical Contractor shall review the requirements and assure all components are in compliance.

B. Qualifications

1. Manufacturer: Company specializing in the design and manufacturing of seismic restraints specified in this section, with documented experience of more than five (5) years.

2. Installer: Company specializing in executing the scope of work specified in this section with documented experience of more than five (5) years.

C. Quality Standards – Seismic Restraints

1. Quality assurance testing required as a condition of product approvals such as concrete anchors shall be carried out and paid for by the contractor.

2. Upon completion of seismic restraint installation, the Contractor and the anchorage engineer shall indicate that, to the best of their knowledge, the seismic anchorage was installed according to the approved submittal and/or any approved revisions thereto. This report shall also identify changes made from the approved submittal. Reports may be submitted by system, or by like groups of components, or for the entire installation covered by this specification section.

D. Quality Standards – Vibration Isolation

1. Vibration isolators shall have calibration markings or some method to determine the actual deflection under the imposed load after installation and adjustment.

2. Isolators shall operate within the linear portion of their load versus deflection curves. Load versus deflection curves shall be furnished by the manufacturer and must be linear over a deflection range of at least 50% above the design deflection.

3. The theoretical vertical natural frequency for each support point, based upon load per isolator and isolator stiffness, shall not differ from the design objectives for the equipment as a whole by more than ±10%, and shall be non-resonant with equipment forcing frequencies or support structure natural frequencies.

4. Neoprene components shall have a shore hardness of 30 to 50 ±5%, after minimum aging of (20) days or equal oven aging.

5. Substitution of internally isolated and restrained equipment in lieu of the isolation and restraints specified in this Section is acceptable provided conditions of this Section are met. Provide a letter, from the equipment manufacturer, stating that the specified noise and vibration levels will be obtained and that the seismic restraints shall be in compliance with these specifications. Pay costs for converting to the specified external vibration isolation and restraints should submissions or installations be found unacceptable pursuant to the intent of this specification.

6. Should any rotating equipment cause excessive noise or vibration, the Electrical Contractor shall be responsible for rebalancing, realignment, or other remedial work required to reduce noise and vibration levels. Excessive is defined as exceeding the manufacturer's specifications for the unit in question.

7. Upon completion of the work, the Architect shall inspect the installation and shall inform the Contractor of any further work that must be completed. Make adjustments as approved by the Architect that result from the final inspection. This work shall be done before vibration isolation systems are accepted.

8. Manufacturer Responsibility

   a. Manufacturer of vibration isolation equipment shall have the following responsibilities:

      1) Determine vibration isolation sizes and locations.

      2) Provide equipment vibration isolation as scheduled or specified.

      3) Guarantee specified isolation system deflections.

      4) Provide installation instructions, drawings and field supervision to ensure proper installation and performance of systems.

1.8 SEISMIC RESTRAINT REQUIREMENTS

A. General

1. Equipment and systems shall be restrained for seismic requirements by Restraint Types as described in PART 2—PRODUCTS.

2. Floor or roof mounted equipment, regardless of weight or vibration isolation requirements, shall be restrained to the structure to allow for required acceleration.

3. Suspended equipment shall be 2-point or 4-point independently braced with Type III restraints, installed taut for non-isolated equipment, and slack (with 1/2" cable deflection) for isolated equipment. Stiffeners for support rods may be required,

certifications shall clearly delineate when such stiffening is required or not. Equipment supports and the required seismic bracing shall be anchored to the structure.

4. Where base anchoring of equipment is insufficient to resist seismic forces, restraints such as Type III shall be located above the unit's center of gravity to resist "G" forces. Vertically mounted tanks and upblast tubular centrifugal fans may require this additional restraint.

5. Design of restraints must consider capacity of structural elements. Project Structural Engineer shall be consulted prior to design of restraints for large or unusual loads.

B. Restraint Requirements

1. Conduit, busway and cable tray bracing shall be: 20'-0" maximum transversely; 40'-0" maximum longitudinally; and within 4'-0" each change of direction.

2. Seismic restraints are not required on the following:

a. Individually supported electrical conduit less than 2“ nominal diameter.

b. The exclusion for bracing can only be used for conduits with hangers less than 12” in length.

3. Suspended conduit, not excluded by diameter or distance from structure allowances, shall have Seismic Restraint Type III or V.

4. Trapeze hangers supporting conduit alone or in combination with piping, where each individual element does not require bracing, will require seismic restraint when the aggregate weight of all elements supported on the trapeze assembly exceeds 10 pounds per foot. Weight shall be determined assuming all pipes are filled with water and conduits are filled with conductors as scheduled.

5. Conduit and busway risers through cored shafts require no additional seismic bracing. (Core diameters to be a maximum of 2" larger than conduit O.D.)

C. Non-Isolated Equipment Restraint Requirements

1. Ceiling suspended equipment.

a. Restraint Type III or V.

2. Suspended ceilings containing light fixtures may be considered as meeting seismic zone requirements. In which case, earthquake clips or other approved means of positive attachment shall secure fixture to T-bar structure.

3. Floor or wall mounted equipment.

a. Restraint Type III or V.

D. Provide restraints for suspended transformers and other suspended electrical equipment.

E. Install equipment on isolators and after the isolators have been adjusted for required deflection.

PART 2 - PRODUCTS

2.1 SEISMIC RESTRAINT – GENERAL

A. Seismic restraints shall be capable of accepting, without failure, seismic forces determined in accordance with the Connecticut State Building Code. They shall maintain the equipment in a captive position and not short circuit isolation during normal operating conditions. Isolators shall have provisions for bolting and/or welding to the structure.

B. Metal parts of seismic restraint equipment installed out-of-doors shall be cold dip galvanized, cadmium plated, or neoprene or PVC coated after fabrication. Galvanizing shall meet ASTM alt Spray Test Standards and Federal Test Standard #14.

C. Attachment plates to be cast into housekeeping pads, concrete inserts and beam clamps that may be required for seismic compliance shall be provided by this Section.

2.2 SEISMIC RESTRAINT TYPES

A. Type I

1. Type I shall comply with general characteristics of spring isolator Type A with snubbing restraint in all directions capable of supporting equipment at fixed elevations during installation. Cast or aluminum housings, except ductile iron are not acceptable.

a. Type I seismic restraint shall be Mason Industries Type SSLFH.

B. Type II

1. Each corner or side of equipment base shall incorporate a seismic restraint snubber having a minimum of 5/8" thick resilient pad limit stop. Seismic snubbers shall be in accordance with manufacturer's recommendations.

2. Type II seismic restraints shall be Mason Industries Type Z-1011 or Z-1225.

C. Type III

1. Type III shall be multiple metal cable or strut type with approved fastening devices to equipment and structure. System to be field bolted to deck or to overhead structural members using 2-sided beam clamps or appropriately designed inserts for concrete. All parts of the system including cables, excluding fasteners, are to be of a single supplier to ensure seismic compliance.

D. Type IV

1. Type IV shall have double deflection neoprene isolator (minimum 0.3") encased in ductile iron or steel casing.

2. Type IV seismic restraints shall be Mason Industries Type BR, RBA or RCA.

E. Type V

1. Non-isolated equipment shall be field bolted or welded (powder shots not acceptable) to the structure as required to meet seismic forces. Bolt diameter, embedment data and/or weld length must be shown in certified calculations.

2.3 VIBRATION ISOLATION – GENERAL

A. Vibration isolation equipment shall be capable of accepting, without failure, seismic forces determined in accordance with the Connecticut State Building Code and the Contract Documents. They shall maintain the equipment in a captive position and not short circuit isolation during normal operating conditions. Isolators shall have provisions for bolting and/or welding to the structure.

B. Metal parts of vibration isolation units installed out-of-doors shall be cold dip galvanized, cadmium plated, or neoprene or PVC coated after fabrication. Galvanizing shall meet ASTM alt Spray Test Standards and Federal Test Standard #14.

C. Base supported isolators shall have baseplates with bolt holes for fastening the isolators to the support members.

D. Isolator types are specified to establish minimum standards. At the Contractor's option, laborsaving accessories can be an integral part of isolators supplied to provide initial lift of equipment to operating height, hold piping at fixed elevations during installation and initial system filling operations, and similar installation advantages. Accessories must not degrade the vibration isolation system.

E. Static deflections stated are the minimum acceptable deflection under actual load. Isolators shall be selected for no less than 50% reserve deflection beyond actual operating conditions.

F. Attachment plates to be cast into housekeeping pads, concrete inserts and beam clamps that may be required for seismic compliance shall be provided.

G. Coordinate the size, location and special requirements of vibration isolation equipment and systems with other Sections. Coordinate plan dimensions with size of housekeeping pads.

2.4 VIBRATION ISOLATORS

A. Type A (Floor Spring and Neoprene)

1. The Type A spring isolator shall:

a. Have a minimum outside diameter to overall height of 0.8:1.

b. Have corrosion resistance where exposed to corrosive environment with:

1) Springs cadmium plated or electro-galvanized.

2) Hardware cadmium plated.

3) Other metal parts hot dip galvanized.

c. Have reserve deflection (from loaded to solid height) of 50% of rated deflection.

d. Have minimum 1/4" thick neoprene acoustical base pad on underside, unless designed otherwise.

e. Be designed and installed so that ends of springs remain parallel.

2. Type A isolator shall be Mason Industries Type SLF.

3. Type A isolator must be used with Seismic Restraint II.

B. Type B (Floor Spring and Neoprene Travel Limited)

1. The Type B spring isolator shall be the same as Type A with the following additional features.

a. Built-in vertical limit stops with minimum 1/4" clearance under normal operation.

b. Tapped holes in top plate for bolting to equipment.

c. Capable of supporting equipment at fixed elevation during equipment installation. Installed and operating heights shall be identical.

d. Adjustable and removable spring pack with separate neoprene isolation pad.

2. Type B isolator shall be Mason Industries Type SLR.

3. Type B isolator must be bolted or welded to the structure.

C. Type C (Spring Hanger Rod Isolator)

1. Spring isolator (Type A) seated on a steel washer within a neoprene cup incorporating a rod isolation bushing.

2. Spring diameters and hanger box shall allow 30° of hanger rod movement.

3. Type C isolator shall be Mason Industries Type 30 or W30.

4. Type C isolator must be used with Seismic Restraint III.

D. Type D

1. Type D isolator is the same as Seismic Restraint IV.

E. Type E (Elastomer Hanger Rod Isolator)

1. Molded (minimum 1 3/4" thick) neoprene element with projecting bushing lining the rod clearance hole. Static deflection at rated load shall be minimum 0.35".

2. Steel retainer box encasing neoprene mounting capable of supporting equipment up to (4) times the rated capacity of the element.

3. Type E isolator shall be Mason Industries Type HD.

4. Type E isolator must be used with Seismic Restraint III.

F. Type F (Combination Spring/Elastomer Hanger Rod Isolator)

1. Spring and neoprene elements in a steel retainer box with the features as described for Type C and Type E isolators.

2. Type F isolator shall be Mason Industries Type 30N.

3. Type F isolator must be used with Seismic Restraint III.

G. Type G (Pad Type Elastomer Isolator)

1. 0.75" minimum thickness, 50psi maximum loading, ribbed or waffled design.

2. Minimum 0.1" deflection.

3. 1/16" galvanized steel plate between multiple pad layers.

4. Provide load distribution plate where attachment to equipment bearing surface is less than 75% of the pad area.

5. Type G isolators shall be Mason Industries Type Super W.

6. Bolting of Type G isolator required for seismic compliance. Neoprene and duck washers and bushings shall be provided to prevent short circuiting.

H. Type H (Pad Type Elastomer Isolator)

1. Laminated canvas duck and neoprene, maximum loading 1000 psi, minimum 1/2" thick.

2. Provide load distribution plate where attachment to equipment bearing surface is less than 75% of the pad area.

3. Type H isolator shall be Mason Industries Type HL.

4. Bolting of Type H isolator required for seismic compliance. Neoprene and duck washers and bushings shall be provided to prevent short circuiting.

I. Type J (Steel Rails)

1. Steel members of sufficient strength to prevent equipment flexure during operation.

2. Height saving brackets as required to reduce operating height.

3. Type J isolator shall be Mason Industries Type ICS.

J. Type K (Anchors and Guides)

1. Acoustical pipe anchor or guide, consisting of a telescopic arrangement of (2) sizes of steel tubing separated by a minimum 1/2" thickness of Type H pad.

2. Vertical restraints shall be provided by a similar material arranged to prevent vertical travel in either direction (anchors only).

3. Allowable loads on isolation materials shall not exceed 500 psi, and the design shall be balanced for equal resistance in any direction.

4. Anchors and guides must be bolted or welded to meet seismic criteria.

5. Type K anchor shall be Mason Industries Type ADA or VDA.

PART 3 – EXECUTION

3.1 INSTALLATION

A. Seismic restraint systems must be installed in strict accordance with approved submittals, the manufacturer's details, and Connecticut State Building Code requirements.

B. Electrical equipment shall be mounted on vibration isolation steel rails using Type G or H isolators.

C. The diesel engine-generator set and floor supported distribution transformers located within the building shall be mounted on isolation units utilizing type B springs, appropriately secured to the housing. Spring units shall be selected for a minimum static deflection of 1.5".

D. Secondary Unit Substations located within the building shall be mounted on vibration isolation rails utilizing Type G neoprene mounts selected to deflect a minimum of 0.25". Vibration isolation design and arrangement shall be approved by the substation manufacturer.

E. Suspended electrical equipment shall be supported on an appropriate steel frame from Type F hangers, selected for a minimum static deflection of 0.75".

F. Vibration isolation systems must be installed in strict accordance with the manufacturer's installation guidelines, Connecticut State Building Code requirements, and approved submittals.

G. Vibration isolators shall not cause any change of position of equipment resulting in stress on equipment connections.

H. Conduit and busway penetrations through floors and walls shall not be rigidly connected to the building structure. Provide sleeves with clearances around the outside, as recommended by the vibration materials manufacturer. Penetrations shall be smokeproofed and firestopped in an approved manner as specified.

I. Generally, isolation shall be designed to limit equipment room floor or roof loading to a maximum of 50 lbs./sq.ft. and vibration isolators shall be carefully and specifically selected for each piece of equipment.

J. Motor driven equipment which is to be isolated shall have motor mounted on the isolated equipment or shall have motor, equipment and drive mounted on a common base.

K. Hanger isolators shall be installed with the hanger box hung as closely as possible (without direct contact) to the structure.

L. Hanger isolators shall be suspended from substantial structural members sized for a maximum deflection of L/360 at mid span, not from slab diaphragm, unless specifically permitted by the Architect.

M. Hanger rods shall not short circuit the hanger box.

N. Floor mounted transformers shall be installed on non-metallic, vibration isolating pads meeting seismic requirements and selected for at least 0.2” deflection.

O. Set steel bases for 1" clearance between housekeeping pad and base. Set concrete inertia bases for 2" clearance. Adjust equipment level.

P. Position equipment, structural base and concrete base on blocks or wedges at proper operating height.

Q. Check equipment and verify operating load conditions before transferring base isolation loads to springs and removing wedges.

R. Electrical corrections to vibration isolated mechanical and electrical equipment shall be made with liquid tight flexible conduit. The conduit shall be installed in a slack condition.

S. Verify installed isolators and mounting system permit equipment motion in all directions.

T. Adjust or provide additional resilient restraints to flexibly limit lateral motion to 1/4" during start-up of equipment.

U. Before start-up, clean out all foreign matter from between bases and equipment to prevent short circuit.

V. Install flexible connectors on conduit connected to equipment supported by vibration isolation. Flexible conduit length shall be at least 15 times the diameter of the conduit.

W. Upon completion of installation of vibration isolation devices, the manufacturer's local representative shall inspect the completed project and certify in writing to the Electrical Contractor that all systems are either installed properly, or require correction. The Electrical Contractor shall submit a report to the Architect, including the manufacturer's report, certifying correctness of the installation or detailing corrective work to be done.

3.2 CONDUIT ISOLATION REQUIREMENTS

A. Isolate conduit connected to rotating or reciprocating equipment.

B. Vertical riser conduit supports, where required, under 2" diameter shall utilize Type H isolation.

C. Conduit anchors or guides, where required, shall utilize Type K isolators.

D. Riser sway supports, where required, shall utilize (2) neoprene elements (Type G or H) to accommodate tension and compression forces.

END OF SECTION

SECTION 260570 - POWER SYSTEM STUDIES

PART 1 - GENERAL

1.1 RELATED DOCUMENTS

A. All of the Contract Documents, as listed on the Table of Contents and including General and Supplementary Conditions and Division 01, General Requirements, shall be included in, and made part of, this Section.

1.2 DESCRIPTION OF WORK

A. The following Electrical Engineering Studies shall be performed by the distribution equipment manufacturer or a firm engaged by the distribution equipment manufacturer:

1. Short Circuit Studies

2. Protective Device Evaluation Studies

3. Protective Device Coordination Studies

4. Arc Flash Hazard Analysis

B. The studies shall include all portions of the electrical distribution system from the normal power incoming primary source or sources, the emergency standby source down to and including all panels and distribution equipment in the distribution system. Normal system connections and those which result in maximum fault conditions shall be adequately covered in the study.

C. The power system studies shall include all new electrical system components to confirm the adequacy of the interrupting ratings, proper coordination settings of all overcurrent protection devices and to determine the requirements for arc flash protection boundary and incident energy exposure labeling to the satisfaction of the Electrical Engineer. Refer to Specification Section 26 0520 for requirements for field labeling based on the results of the arc flash study.

D. The switchgear equipment manufacturer shall carry in his bid to the Electrical Subcontractor, a sufficient allowance to provide modifications to the equipment, if necessary, based on the results of the studies identified herein.

1.3 REFERENCES

A. Institute of Electrical and Electronics Engineers, Inc. (IEEE):

1. IEEE 141 – Recommended Practice for Electric Power Distribution and Coordination of Industrial and Commercial Power Systems

2. IEEE 242 – Recommended Practice for Protection and Coordination of Industrial and Commercial Power Systems

3. IEEE 399 – Recommended Practice for Industrial and Commercial Power System Analysis

4. IEEE 241 – Recommended Practice for Electric Power Systems in Commercial Buildings

5. IEEE 1015 – Recommended Practice for Applying Low-Voltage Circuit Breakers Used in Industrial and Commercial Power Systems.

6. IEEE 1584 - Guide for Performing Arc-Flash Hazard Calculations

B. American National Standards Institute (ANSI):

1. ANSI C57.12.00 – Standard General Requirements for Liquid-Immersed Distribution, Power, and Regulating Transformers

2. ANSI C37.13 – Standard for Low Voltage AC Power Circuit Breakers Used in Enclosures

3. ANSI C37.010 – Standard Application Guide for AC High Voltage Circuit Breakers Rated on a Symmetrical Current Basis

4. ANSI C 37.41 – Standard Design Tests for High Voltage Fuses, Distribution Enclosed Single-Pole Air Switches, Fuse Disconnecting Switches and Accessories.

C. The National Fire Protection Association (NFPA)

1. NFPA 70 - National Electrical Code, latest edition

2. NFPA 70E – Standard for Electrical Safety in the Workplace

1.4 RELATED WORK

A. For work to be included as part of this Section, to be furnished and installed by the Electrical Subcontractor, refer to the Related Work section of Specification Section 26 0510.

B. Carefully examine all of the Contract Documents, criteria sheets and all other Sections of the specifications for requirements which affect work under this Section, whether or not such work is specifically mentioned in this Section.

1.5 SUBMITTALS

A. Prepare and submit shop drawings in accordance with the requirements hereinbefore specified, and with Section 01 3300 – Submittal Procedures in the manner described therein, modified as noted hereinafter.

B. All shop drawings shall have clearly marked the appropriate specification number of drawing designation, for identification of the submittal.

C. Disposition of shop drawings shall not relieve the Electrical Subcontractor from the responsibility for deviations from drawing or specifications, unless he has submitted in writing a letter itemizing or calling attention to such deviations at time of submission and secured written approval from the Engineer, nor shall such disposition of shop drawings relieve the Electrical Subcontractor from responsibility for errors in shop drawings or schedules.

D. The studies shall be submitted to the Architect prior to receiving final approval of the distribution equipment shop drawings and prior to release of equipment for manufacture. If formal completion of the studies may cause delay in equipment manufacture, approval from the Architect may be obtained for a preliminary submittal of sufficient study data to ensure that the selection of device ratings and characteristics will be satisfactory.

1.6 QUALITY ASSURANCE

A. Attention is directed to the provisions of Section 01 4000 regarding quality requirements for the work under this Contract. The Electrical Subcontractor shall review the requirements and assure all components are in compliance.

B. The firm performing the studies shall be currently involved in high and low voltage power system evaluation. The study shall be performed, stamped and signed by a registered professional engineer in the State of Connecticut. Credentials of the individual(s) performing the study and background of the firm shall be submitted to the Engineer for approval prior to start of the work. A minimum of five (5) years experience in power system analysis is required for the individual in charge of the project.

C. The firm performing the study shall demonstrate capability and experience to provide assistance during start up as required.

D. Submit qualifications of individual(s) who will perform the work for approval prior to commencement of the studies. Provide studies in conjunction with equipment submittals to verify equipment ratings required. Submit a draft of the study to the Architect for review prior to delivery of the study to the Owner. Make all additions or changes as required by the reviewer.

PART 2 – PRODUCTS

NOT USED

PART 3 – EXECUTION

3.1 DATA COLLECTION FOR THE STUDY

A. The Electrical Subcontractor shall provide the required data for preparation of the studies. The Engineer performing the system studies shall furnish the Electrical

Subcontractor with a listing of the required data immediately after award of the contract.

B. The Electrical Subcontractor shall expedite collection of the data to assure completion of the studies as required for final approval of the distribution equipment shop drawings and prior to release of the equipment for manufacture.

1. Source combination may include present and future motors and generators.

2. Load data utilized may include existing and proposed loads obtained from Contract Documents provided by Owner, or Contractor.

3. If applicable, include fault contribution of existing motors in the study. The Contractor shall obtain required existing equipment data, if necessary, to satisfy the study requirements.

3.2 SHORT CIRCUIT STUDY

A. The short circuit study shall be performed with the aid of a digital computer program and shall be in accordance with the latest applicable IEEE and ANSI standards.

B. In the short circuit study, provide calculation methods and assumptions, the base per unit quantities selected, one-line diagrams, source impedance data including power company system characteristics, typical calculations, tabulations of calculation quantities and results, conclusions, and recommendations. Calculate short circuit interrupting and momentary (when applicable) duties for an assumed 3-phase bolted fault at each supply switchgear lineup, unit substation primary and secondary terminals, low-voltage switchgear lineup, switchboard, motor control center, distribution panelboard, branch circuit panelboards, and all other distribution equipment throughout the system. Provide a ground fault current study for the same system areas, including the associated zero sequence impedance data. Include in tabulations fault impedance, X to R ratios, asymmetry factors, motor contribution, short circuit kVA, and symmetrical and asymmetrical fault currents.

C. Include complete fault calculations as specified herein for each proposed and ultimate source combination. Note that source combinations may include present and future supply circuits, large motors or generators as noted on Drawing one-lines.

D. Study shall include the results for each mode of operation, as follows:

1. Normal power available and all transfer switches in the normal position.

2. Emergency generator(s) or emergency source(s) running and all transfer switches in the emergency position

3. If closed transition paralleling is provided, study shall be run for each mode of parallel operation as follows:

a. Multiple normal sources in parallel
b. The normal and emergency source in parallel
c. multiple emergency sources in parallel

E. Motor Contribution

1. Include fault contribution of all motors in the study as follows:

   a. 100% of all motors with standard starters (no VFD's)
   b. 25% of all motors provided with VFD's and bypass starters
   c. 0% of motors provided with VFD's without bypass starters

2. Motor short circuit contribution shall be included at the appropriate locations in the system as indicated on the drawings, so that the computer calculated values represent the theoretical short circuit current available.

F. Notify the Architect, in writing, of circuit protective devices not properly rated for fault conditions.

3.3 PROTECTIVE DEVICE EVALUATION AND COORDINATION STUDY

A. In the protective device coordination study, provide time-current plots graphically indicating the coordination proposed for the system, centered on conventional, full-size, log-log forms.

B. Include a complete one-line diagram of the entire system with legend. Text on the one line shall be legible and a minimum of 3/32" tall. Include a detailed description of each protective device identifying its type, function, manufacturer, and time-current characteristics. Tabulate recommended device tap, time dial, pickup, instantaneous, and time delay settings. For each device, provide a reference indicating the plot sheet(s) where the curves are indicated.

C. Also include on each plot sheet the following:

1. A complete title block with project name, date plot name and scale
2. Time current curve for each devices represented
3. A function block for each curve identifying what the curve represents (device or damage curve). Include a detailed description of each protective device identifying its type, function, manufacturer, and time-current characteristics and recommended device tap, time dial, pickup, instantaneous, and time delay settings.
4. A one line representation of the devices represented on the plot.

D. Include on the plot sheets power company relay and fuse characteristics, system medium-voltage equipment relay and fuse characteristics, low-voltage equipment circuit breaker trip device characteristics, transformer characteristics, motor and generator characteristics, and characteristics of other system load protective devices. Include all devices down to largest branch circuit and largest feeder circuit breaker in each motor control center, and main breaker in branch panelboards.

E. Include all adjustable settings for ground fault protective devices. Include manufacturing tolerance and damage bands in plotted fuse characteristics. Show transformer full load and 150, 400, or 600 percent currents, transformer magnetizing inrush, ANSI transformer withstand parameters, and significant symmetrical and

asymmetrical fault currents. Terminate device characteristic curves at a point reflecting the maximum symmetrical or asymmetrical fault current to which the device is exposed.

F. Provide settings for the chiller motor starters or obtain from the Mechanical Subcontractor, include in the study package, and comment.

G. Select each primary protective device required for a delta-wye connected transformer so that its characteristic or operating band is within the transformer characteristics, including a point equal to 58 percent of the ANSI withstand point to provide secondary line-to-ground fault protection. Where the primary device characteristic is not within the transformer characteristics, show a transformer damage curve. Separate transformer primary protective device characteristic curves from associated secondary device characteristics by a 16 percent current margin to provide proper coordination and protection in the event of secondary line-to-line faults. Separate medium-voltage relay characteristic curves from curves for other devices by at least a 0.4-second time margin.

H. When an emergency generator is provided, include phase and ground coordination of the generator protective devices. Show the generator decrement curve and damage curve along with the operating characteristic of the protective devices. Obtain the information from the generator manufacturer and include the generator actual impedance value, time constants and current boost data in the study. Do not use typical values for the generator.

I. Evaluate proper operation of the ground relays in 4-wire distributions with more than one main service circuit breaker, or when generators are provided, and discuss the neutral grounds and ground fault current flows during a neutral to ground fault.

J. For motor control circuits, show the MCC full-load current plus symmetrical and asymmetrical of the largest motor starting current and time to ensure protective devices will not trip during major or group start operation.

K. For distribution transformer primary protection, the system study engineer shall obtain transformer in-rush current characteristics from the manufacturer. If a miscoordination occurs on the primary circuit breaker due to transformer in-rush current, the system study engineer shall contact the successful switchgear manufacturer. The manufacturer shall be responsible to select appropriate circuit breaker frame, sensor and trip sizes to assure each primary breaker coordinates with transformer inrush current. Manufacture shall alert the Electrical and Engineer to determine if conductor sizes will be required to be increased. If so, the increased conductors shall be provided at no additional cost to the Owner.

L. Selective Coordination

1. Elevator Distribution

a. All overcurrent protection device(s) associated with the Elevator distribution system shall be selectively coordinated with all upstream overcurrent protection devices based on the highest calculated value of available short circuit current at the overcurrent protection device

terminals as calculated above to meet the requirements of the National Electrical Code Article 620.62.

2. Emergency Distribution

   a. All overcurrent protection device(s) associated with the Emergency (Life Safety) and Legally Required Branches of the emergency distribution system shall be selectively coordinated with all upstream overcurrent protection devices based on the highest calculated value of available short circuit current at the overcurrent protection device terminals to meet the requirements of the National Electrical Code Articles 700.27 and 701.18.

3. Fire Pump Distribution

   a. All overcurrent protection device(s) associated with the fire pump shall be selectively coordinated with all upstream overcurrent protection devices based on the highest calculated value of available short circuit current at the overcurrent protection device terminals to meet the requirements of the NFPA 20 9.2.2.(4)(e).

4. Normal (Only) Power Distribution

   a. All other overcurrent protection devices not associated with the devices in 1., 2. or 3. above shall be coordinated to a minimum of 0.10 seconds, to the extent practicable, with all upstream overcurrent protection devices based on the highest calculated value of available short circuit current at the overcurrent protection device terminals.

5. If a miscoordination occurs between upstream and downstream overcurrent protection devices, the system study Engineer shall contact the successful switchgear manufacturer to obtain results of factory laboratory testing for the selected overcurrent protection devices. If a miscoordination still exists, the system study Engineer shall advise the manufacturer. The manufacturer shall be responsible to select appropriate circuit breaker frame, sensor and trip sizes to assure each upstream overcurrent protection device will coordinate with all breakers downstream as indicated in 1., 2., 3. and 4. above.

3.4 FLASH PROTECTION STUDY

A. Flash Protection Boundaries

1. Calculation of flash protection boundaries shall be performed on all parts of the electrical system, for the Owner's documentation and implementation of details of limits of approach boundaries as required by NFPA 70E Standard for Electrical Safety Requirements for Employee Workplaces.

2. Flash protection boundaries shall be calculated for equipment where work could be performed on energized and exposed equipment and/or conductors. Calculations shall be provided for the following equipment including but not limited to:

   a. Substation and switchboard assemblies
   b. Motor control centers
   c. Panelboards
   d. Disconnect switches
   e. Controller equipment such as variable frequency/adjustable speed drives
   f. Fuses and circuit breakers
   g. Rotating equipment
   h. Batteries
   i. Generators
   j. Automatic transfer switches
   k. Premises wiring

3. Flash protection boundaries for circuits rated 600V and less shall be calculated utilizing one of the following formulae:

$$D_c = [\ 2.65 \times MVA_{bf} \times t\ ]^{1/2}$$

or,

$$D_c = [\ 53 \times MVA \times t\ ]^{1/2}$$

where:

D_c = distance of person from an arc source for a just curable burn in feet

MVA_{bf} = bolted fault MVA at point involved

MVA = MVA rating of transformer. For transformers with MVA ratings below 0.75 MVA, multiply the transformer MVA rating by 1.25

t = time of arc exposure in seconds

B. Incident Energy Exposures

1. Calculation of incident energy exposures shall be performed on all parts of the electrical system, for the Owner's determination and implementation of details of personal protective equipment as required by NFPA 70E Standard for Electrical Safety Requirements for Employee Workplaces.

2. Incident energy exposures shall be calculated for equipment where work could be performed on energized and exposed equipment and/or conductors. Incident energy exposures for circuits rated 600V and less and emanating from any of the equipment listed in Paragraph titled Flash Protection Boundaries shall be

calculated utilizing the 'Arc in a Cubic Box' formula listed as follows with results expressed in calories/square centimeter (cal/cm^2):

$$E_{MB} = 1038.7 \times D_B^{-1.4738 \times} t_A \times [(0.0093 \times F^2) - (0.3453 \times F) + 5.9675]$$

where:

E_{MB} = maximum 20 in. cubic box incident energy, cal/cm2

D_B = distance from arc electrodes, inches (for distances 18 in. and greater)[Note 1]

t_A = arc duration, seconds

F = bolted fault short circuit current, kA (for the range of 16 to 50 kA)

Note 1: Incident energy exposure level shall be based on the working distance of the employee's face and chest areas from a prospective arc source for the specific task to be performed. Utilize 18 inches for all calculations.

3. Incident energy exposure calculations for lower level (downstream) components shall be considered the same as for higher level (upstream) components of the same feeder or branch circuit where the same overcurrent protective device serves both higher and lower components and where the available short circuit current is not depreciably reduced due to increased system impedances such as would be introduced with long conductor lengths.

4. Results of the study will be used for the required field labeling of equipment as indicated in Specification Section 26 0520

3.5 STUDY REPORT

A. A draft report shall be sent to the equipment manufacturer for review prior to issuance of the final report. The manufacture shall review system discrepancies and make modifications to equipment as necessary to meet the requirements of the study. The study shall be updated to include changes in devices and reissued as necessary to ensure all devices meet the study requirements.

B. The final results of the power system study shall be summarized in a report. Multiple bound copies of the final report shall be submitted to the Architect per the requirements indicated in Submittals above.

C. The final study report shall include the following sections:

1. Executive Summary.

2. Descriptions, purpose, basis and scope of the study.

3. Tabulations of circuit breaker, fuse and other protective device ratings versus calculated short circuit duties, and commentary regarding same.

4. Protective device time versus current coordination curves, tabulations of relay and circuit breaker trip settings, fuse selection.

5. Fault current calculations including a definition of terms and guide for interpretation of computer printout.

6. Flash protection incident energy exposures including a definition of terms and guide for interpretation of calculations.

7. Flash protection boundaries indicted on scaled drawings for inclusion in the electric rooms. Refer to Specification Section 26 0520.

8. One line diagram

9. CD or flash drive with the electronic input data files

3.6 ARC FLASH TRAINING

A. The Electrical Subcontractor shall provide training to the Owner's qualified electrical personnel of the potential arc flash hazards associated with working on energized equipment (minimum of 4 hours). The training shall be certified for continuing education units (CEUs) by the International Association for Continuing Education Training (IACET) or equivalent.

3.7 POWER COMPANY APPROVAL

A. Where required, copies of the final report shall be submitted to the power company for their review and approval. Approved copies of the report shall be submitted to the Architect.

END OF SECTION

SECTION 260580 – ELECTRICAL ACCEPTANCE TESTS

PART 1 - GENERAL

1.1 RELATED DOCUMENTS

A. All of the Contract Documents, as listed on the Table of Contents and including General and Supplementary Conditions and Division 01, General Requirements, shall be included in, and made part of, this Section.

1.2 DESCRIPTION OF WORK

A. The Electrical Contractor shall engage the services of a recognized independent NETA testing firm for the purpose of performing inspections and tests as herein specified.

B. The testing firm shall provide all material, equipment, labor, and technical supervision to perform such tests and inspections. It is the purpose of these specifications to assure that all tested electrical equipment, both Electrical Contractor and Owner supplied, is operational and within industry and manufacturer's tolerances and is installed in accordance with design specifications.

C. The tests and inspections shall determine suitability for energization.

D. An itemized description of equipment to be inspected and tested follows:

1. Substations:

    a. 5 kV and 15 kV load interrupter switch and fuses.
    b. Surge arresters.
    c. Substation transformer.
    d. Low voltage switchboard including:

        1) Main, tie and feeder drawout power circuit breakers.
        2) Metering, instrumentation and relays.
        3) Instrument transformers.
        4) Bussing.

2. Grounding system.
3. Ground fault protection systems.
4. Conductors

    a. Medium voltage conductors.
    b. 600 volt conductors. (60 amperes and larger)

5. Low voltage distribution equipment

    a. Busway.
    b. Metering.
    c. Panelboards.

d. Switchboards.
e. Enclosed circuit breakers.

6. Motors.
7. Emergency system equipment

a. Automatic transfer switches.

8. Surge arresters.

1.3 RELATED WORK

A. For work to be included as part of this Section, to be furnished and installed by the Electrical Contractor, refer to the Related Work section of Specification Section 26 0510.

B. Carefully examine all of the Contract Documents, criteria sheets and all other Sections of the specifications for requirements which affect work under this Section, whether or not such work is specifically mentioned in this Section.

1.4 REFERENCES

A. All inspections and field tests shall be in accordance with the latest adopted edition of the following codes, standards, and specifications except as provided otherwise herein.

1. American National Standards Institute - ANSI

2. Association of Edison Illuminating Companies - AEIC

3. Institute of Electrical and Electronic Engineers - IEEE

a. ANSI/IEEE C2, National Electrical Safety Code

b. ANSI/IEEE C37, Guides and Standards for Circuit Breakers, Switchgear, Relays, Substations, and Fuses.

c. ANSI/IEEE C57, Distribution, Power, and Regulating Transformers.

d. ANSI/IEEE C62, Surge Protection.

e. ANSI/IEEE Std. 43 (R1992). IEEE Recommended Practice for Testing Insulation Resistance of Rotating Machinery.

f. ANSI/IEEE Std. 81. IEEE Guide for Measuring Earth Resistivity, Ground Impedance, and Earth Surface Potentials of a Ground System.

g. ANSI/IEEE Std. 142. IEEE Recommended Practice for Grounding of Industrial and Commercial Power Systems (IEEE Green Book.).

h. ANSI/IEEE Std. 241. IEEE Recommended Practice for Electric Power Systems in Commercial Buildings (Gray Book).

i. ANSI/IEEE Std. 242. IEEE Recommended Practice for Protection and Coordination of Industrial and Commercial Power Systems (Buff Book).

j. ANSI/IEEE Std. 399. IEEE Recommended Practice for Power Systems Analysis (Brown Book).

k. ANSI/IEEE Std. 446. IEEE Recommended Practice for Emergency and Standby Power Systems for Industrial and Commercial Applications (Orange Book).

l. ANSI/IEEE Std. 493. IEEE Recommended Practice for the Design of Reliable Industrial and Commercial Power Systems (Gold Book).

m. ANSI/IEEE Std. 602. IEEE Recommended Practice for Electric Systems in Health Care Facilities (White Book).

n. ANSI/IEEE Std 1100. IEEE Recommended Practice for Powering and Grounding Sensitive Electronic Equipment (Emerald Book).

o. ANSI/IEEE Std. 48. IEEE Standard Test Procedures and Requirements for High-Voltage AC Cable Terminations.

p. ANSI/IEEE Std. 400. IEEE Guide for Making High-Direct-Voltage Tests on Power Cable Systems in the Field.

4. Insulated Cable Engineers Association - ICEA

5. InterNational Electrical Testing Association - NETA

a. NETA Maintenance Testing Specifications for Electrical Power Distribution Equipment and Systems.

6. National Electrical Manufacturer's Association - NEMA

a. NEMA Standard for Publication No. AB4: Guidelines for Inspection and Preventive Maintenance of Molded-Case Circuit Breakers Used in Commercial and Industrial Applications.

b. NEMA Publication MG1: Motors and Generators

7. National Fire Protection Association - NFPA

a. ANSI/NFPA 70: National Electrical Code.

b. ANSI/NFPA 70B: Recommended Practice for Electric Equipment Maintenance.

c. ANSI/NFPA 70E: Electrical Safety Requirements for Employee Workplaces.

d. ANSI/NFPA 101: Life Safety Code.

e. ANSI/NFPA 110: Emergency and Standby Power Systems.

f. ANSI/NFPA 780: Lightning Protection Code.

8. Occupational Safety and Health Administration - OSHA

9. State and local codes and ordinances

10. Underwriters Laboratory - UL

1.5 QUALIFICATIONS OF THE TESTING FIRM

A. The testing firm shall be an independent testing organization which can function as an unbiased testing authority, professionally independent of the manufacturers, suppliers, and installers of equipment or systems evaluated by the testing firm.

B. The testing firm shall be regularly engaged in the testing of electrical equipment devices, installations, and systems.

C. The testing firm shall meet the criteria for Full Membership or be a Full Member company of the InterNational Electrical Testing Association.

D. The lead, on site, technical person shall be currently certified by the InterNational Electrical Testing Association (NETA) or the National Institute for Certification in Engineering Technologies (NICET) in electrical power distribution system testing.

E. The testing firm shall utilize technicians who are regularly employed by the firm for testing services.

F. The testing firm shall submit proof of the above qualifications with bid documents when requested.

1.6 DIVISION OF RESPONSIBILITY

A. The Electrical Contractor shall perform routine insulation-resistance, continuity, and rotation tests for all distribution and utilization equipment prior to, and in addition to, tests performed by the testing firm specified herein.

B. The Electrical Contractor shall supply a suitable and stable source of electrical power to each test site. The testing firm shall specify the specific power requirements.

C. The Electrical Contractor shall notify the testing firm when equipment becomes available for acceptance tests. Work shall be coordinated to expedite project scheduling.

D. The Electrical Contractor shall supply a short-circuit analysis and coordination study, a protective device setting sheet, a complete set of electrical plans, specifications, and any pertinent change orders to the testing firm prior to commencement of testing.

E. The Architect shall be notified prior to commencement of any testing.

F. Any system, material, or workmanship which is found defective on the basis of acceptance tests shall be reported.

G. The testing firm shall maintain a written record of all tests and shall assemble and certify a final test report.

H. Safety and Precautions

1. Safety practices should include, but are not limited to, the following requirements:

a. Occupational Safety and Health Act.

b. Accident Prevention Manual for Industrial Operations, National Safety Council.

c. Applicable state and local safety operating procedures.

d. Owner's safety practices.

e. ANSI/NFPA 70E, Electrical Safety Requirements for Employee Workplaces.

f. American National Standards for Personnel Protection: Lockout/Tagout.

2. All tests shall be performed with apparatus de-energized except where otherwise specifically required.

3. The testing organization shall have a designated safety representative on the project to supervise operations with respect to safety.

1.7 SUITABILITY OF TEST EQUIPMENT

A. All test equipment shall be in good mechanical and electrical condition.

B. Split-core current transformers and clamp-on or tong-type ammeters require careful consideration of the following in regard to accuracy:

1. Position of the conductor within the core.
2. Clean, tight fit of the core pole faces.
3. Presence of external fields.
4. Accuracy of the current transformer ratio in addition to the accuracy of the secondary meter.

C. Selection of metering equipment should be based on a knowledge of the waveform of the variable being measured. Digital multimeters may be average or RMS sensing and may include or exclude the dc component. When the variable contains harmonics or dc offset and, in general, any deviation from a pure sine wave, average sensing, RMS scaled meters may be misleading.

D. Field test metering used to check power system meter calibration must have an accuracy higher than that of the instrument being checked.

E. Accuracy of metering in test equipment shall be appropriate for the test being performed but not in excess of two percent of the scale used.

F. Waveshape and frequency of test equipment output waveforms shall be appropriate for the test and tested equipment.

1.8 TEST INSTRUMENT CALIBRATION

A. The testing firm shall have a calibration program which assures that all applicable test instruments are maintained within rated accuracy.

B. The accuracy shall be directly traceable to the National Institute of Standards and Technology. (NIST).

C. Instruments shall be calibrated in accordance with the following frequency schedule:

1. Field instruments: Analog, 6 months maximum; Digital, 12 months maximum

2. Laboratory instruments: 12 months

3. Leased specialty equipment: 12 months where accuracy is guaranteed by lessor.

D. Dated calibration labels shall be visible on all test equipment.

E. Records, which show date and results of instruments calibrated or tested, must be kept up-to-date.

F. Up-to-date instrument calibration instructions and procedures shall be maintained for each test instrument.

G. Calibrating standard shall be of higher accuracy than that of the instrument tested.

1.9 TEST REPORT

A. The test report shall include the following:

1. Summary of project.
2. Description of equipment tested.
3. Description of test.
4. Test results.
5. Analysis and recommendations.

B. Furnish a copy or copies of the complete report to the Owner as required in the acceptance Contract.

PART 2 – PRODUCTS NOT USED

PART 3 - EXECUTION

3.1 SWITCHGEAR AND SWITCHBOARD ASSEMBLIES

A. Visual and Mechanical Inspection

1. Compare equipment nameplate data with drawings and specifications.

2. Inspect physical, electrical, and mechanical condition.

3. Confirm correct application of manufacturer's recommended lubricants.

4. Verify appropriate anchorage, required area clearances, physical damage, and correct alignment.

5. Inspect all doors, panels, and sections for paint, dents, scratches, fit, and missing hardware.

6. Verify that fuse and/or circuit breaker sizes and types correspond to drawings and coordination study as well as to the circuit breaker's address for microprocessor-communication packages.

7. Verify that current and potential transformer ratios correspond to drawings.

8. Verify tightness of accessible bolted electrical connections by calibrated torque-wrench method in accordance with manufacturer's published data.

9. Confirm correct operation and sequencing of electrical and mechanical interlock systems.

a. Attempt closure on locked-open devices. Attempt to open locked-closed devices.

b. Make key exchange with devices operated in off-normal positions.

10. Inspect insulators for evidence of physical damage or contaminated surfaces.

11. Verify correct barrier and shutter installation and operation.

12. Exercise all active components.

13. Inspect all mechanical indicating devices for correct operation.

14. Verify that filters are in place and/or vents are clear.

15. Test operation, alignment, and penetration of instrument transformer withdrawal disconnects, current-carrying and grounding, as indicated elsewhere in these specifications.

16. Inspect control power transformers.

    a. Inspect physical damage, cracked insulation, broken leads, tightness of connections, defective wiring, and overall general condition.

    b. Verify that primary and secondary fuse ratings or circuit breakers match drawings.

    c. Verify correct functioning of drawout disconnecting and grounding contacts and interlocks.

B. Electrical Tests

1. Perform tests on all instrument transformers as indicated elsewhere in these specifications.

2. Perform ground resistance tests as indicated elsewhere in these specifications.

3. Perform resistance tests through all bus joints with a low-resistance ohmmeter. Any joints that cannot be directly measured due to permanently installed insulation wrap shall be indirectly measured from closest accessible connection.

4. Perform insulation-resistance tests on each bus section, phase-to-phase and phase-to-ground.

5. After insulation resistance test levels are above minimum published values, perform an overpotential test on each bus section, each phase to ground with phases not under test grounded, in accordance with manufacturer's published data. The test voltage shall be applied for one minute.

6. Perform insulation-resistance tests at 1000 volts dc on all control wiring. Do not perform this test on wiring connected to solid-state components.

7. Perform control wiring performance test in accordance with System Function Tests indicated elsewhere in these specifications.

8. Perform current injection tests on the entire current circuit in each section of switchgear.

    a. Perform current tests by primary injection, where possible, with magnitudes such that a minimum of 1.0 ampere flows in the secondary circuit.

b. Where primary injection is impractical, utilize secondary injection with a minimum current of 1.0 ampere.

c. Test current at each device.

9. Determine accuracy of all meters and calibrate watt-hour meters in accordance with the metering section of these specifications. Verify multipliers.

10. Perform phase arrangement check to ensure the bus bars are arranged “A”, “B”, “C”, from front-to-back and/or top-to-bottom and/or left-to-right as viewed from the front of the equipment. In addition, on double-ended switchgear, ensure correct bus phasing from each source.

11. Perform the following tests on control power transformers.

a. Perform insulation-resistance tests. Perform measurements from winding-to-winding and each winding-to-ground. Test voltages shall be in accordance with manufacturers published data.

b. Perform secondary wiring integrity test. Disconnect transformer at secondary terminals and connect secondary wiring to correct secondary voltage. Confirm potential at all devices.

c. Verify correct secondary voltage by energizing primary winding with system voltage. Measure secondary voltage with the secondary wiring disconnected.

d. Verify correct function of control transfer relays located in switchgear with multiple power sources in following energized source for control power transformers.

12. Potential Transformer Circuits

a. Perform secondary wiring integrity test. Disconnect transformer at secondary terminals and connect secondary wiring to correct secondary voltage. Confirm correct potential at all devices.

b. Verify secondary voltage by energizing primary winding with system voltage. Measure secondary voltage with the secondary wiring disconnected.

13. Verify operation of switchgear/switchboard heaters.

C. Test Values

1. Bolt-torque levels shall be in accordance with manufacturers published data.

2. Compare bus connection resistances to values of similar connections.

3. Insulation-resistance values for bus, control wiring, and control power transformers shall be in accordance with manufacturer's published data. Values of insulation resistance less than manufacturer's minimum should be investigated. Overpotential tests should not proceed until insulation-resistance levels are raised above minimum values.

4. Apply overpotential test voltages in accordance with manufacturer's recommendations. The insulation shall withstand the overpotential test voltage applied.

3.2 DRY TYPE TRANSFORMERS

A. Air-Cooled, 600 Volt and Below - Small (167 kVA Single-Phase, 500 KVA Three-Phase, and Smaller)

1. Compare equipment nameplate data with drawings and specifications.

2. Inspect physical and mechanical condition.

3. Verify that resilient mounts are free and that any shipping brackets have been removed.

4. Perform insulation-resistance test. Calculate polarization index. Measurements shall be made from winding-to-winding and each winding-to-ground. Test voltages and minimum resistance shall be in accordance with manufacturers published data. Results shall be temperature corrected as applicable.

5. Verify secondary voltage and make recommendations for tap setting changes.

B. Air-Cooled, All Above 600 Volt and 600 Volt and Below - Large (Greater than 167 Single-Phase and 500 kVA Three-Phase)

1. Visual and Mechanical Inspection

a. Compare equipment nameplate data with drawings and specifications.

b. Inspect physical and mechanical condition.

c. Verify that control and alarm settings on temperature indicators are as specified.

d. Verify that cooling fans operate correctly and that fan motors have correct overcurrent protection.

e. Verify tightness of accessible bolted electrical connections by calibrated torque-wrench method in accordance with manufacturer's published data.

f. Perform specific inspections and mechanical tests as recommended by manufacturer.

g. Make a close examination for shipping brackets or fixtures that may not have been removed during installation. Insure that resilient mounts are free.

h. Verify that winding core, frame, and enclosure grounding are correct.

i. Verify secondary voltage and make recommendations for tap setting changes.

2. Electrical Tests

a. Perform insulation-resistance tests winding-to-winding and each winding-to-ground, with test voltage in accordance with manufacturers published data. Calculate polarization index.

b. Perform power-factor or dissipation-factor tests in accordance with the test equipment manufacturer's instructions.

c. Perform a turns-ratio test on all tap connections. Verify that winding polarities are in accordance with nameplate.

d. Perform an excitation-current test on each phase.

e. Measure the resistance of each winding at each tap connection.

f. Verify that core is solidly grounded. If core is insulated and a removable core ground strap is available, perform core insulation-resistance test at 500 volts dc.

g. Verify correct secondary voltage phase-to-phase and phase-to-neutral after energization and prior to loading.

h. Perform an overpotential test on all high- and low-voltage windings-to-ground.

i. Perform phase arrangement check to ensure the bus bars are arranged “A”, “B”, “C”, from front-to-back and/or top-to-bottom and/or left-to-right as viewed from the front of the equipment.

C. Test Values

1. Bolt-torque levels shall be in accordance with manufacturers published data.

2. Insulation-resistance test values at one minute should not be less than values recommended by the manufacturer. Results shall be temperature corrected as applicable.

3. The polarization index should be compared to manufacturer's factory test results. If manufacturer's data is not available, acceptance test results will serve as baseline data.

4. Turns-ratio test results should not deviate more than one-half percent from either the adjacent coils or the calculated ratio.

5. C_H and C_L dissipation-factor/power-factor values will vary due to support insulators and bus work utilized on dry transformers. The following should be expected on C_{HL} power factors:

   a. Power Transformers: two percent or less

   b. Distribution Transformers: five percent or less

6. Consult transformer manufacturer's or test equipment manufacturer's data for additional information.

7. If winding-resistance test results vary more than one percent from adjacent windings, consult manufacturer.

8. Typical excitation current test data pattern for three-legged core transformer is two similar current readings and one lower current reading.

9. If core insulation resistance is less than one megohm at 500 volts dc, consult manufacturer.

10. AC overpotential test shall not exceed 75 percent of factory test voltage for one minute duration. DC overpotential test shall not exceed 100 percent of the factory RMS test voltage for one minute duration. The insulation shall withstand the overpotential test voltage applied.

3.3 CABLES - 600 VOLT, 60 AMPERES AND ABOVE

A. Visual and Mechanical Inspection

1. Compare cable data with drawings and specifications.

2. Inspect exposed sections of cables for physical damage and correct connection in accordance with single-line diagram.

3. Verify tightness of accessible bolted connections by calibrated torque wrench in accordance with manufacturer's published data.

4. Inspect compression-applied connectors for correct cable match and indention.

5. Verify cable color coding with applicable engineer's specifications and National Electrical Code standards.

B. Electrical Tests

1. Perform insulation-resistance test on each conductor with respect to ground and adjacent conductors. Applied potential to be 1000 volts dc for one minute.

2. Perform continuity test to insure correct cable connection.

C. Test Values

1. Bolt-torque levels shall be in accordance with manufacturers published data.

2. Minimum insulation-resistance values shall be not less than 50 megohms.

3. Investigate deviations between adjacent phases.

3.4 CABLES - MEDIUM VOLTAGE, 69 KV MAXIMUM

A. Visual and Mechanical Inspection

1. Compare cable data with drawings and specifications.

2. Inspect exposed sections of cables for physical damage.

3. Verify tightness of accessible bolted connections by calibrated torque wrench in accordance with manufacturer's published data.

4. Inspect compression-applied connectors for correct cable match and indention.

5. Inspect for shield grounding, cable support, and termination.

6. Verify that visible cable bends meet or exceed ICEA and/or manufacturer's minimum allowable bending radius.

7. Inspect for adequate fireproofing in common cable areas, if specified.

8. If cables are terminated through window-type current transformers, make an inspection to verify that neutral and ground conductors are correctly placed and that shields are correctly terminated for operation of protective devices.

9. Visually inspect jacket and insulation condition.

10. Inspect for correct identification and arrangements.

B. Electrical Tests

1. Perform a shield-continuity test on each power cable by ohmmeter method.

2. Perform an insulation-resistance test utilizing a megohmmeter with a voltage output of at least 2,500 volts. Individually test each conductor with all other conductors and shields grounded. Test duration shall be one minute.

3. Perform a dc high-potential test on all cables. Adhere to all precautions and limits as specified in the applicable NEMA/ICEA Standard for the specific cable. Perform tests in accordance with ANSI/IEEE Standard 400. Test procedure shall be as follows, and the results for each cable test shall be recorded as specified

herein. Test voltages shall not exceed 80 percent of cable manufacturer's factory test value.

a. Insure that the input voltage to the test set is regulated.

b. Current-sensing circuits in test equipment shall measure only the leakage current associated with the cable under test and shall not include internal leakage of the test equipment.

c. Record wet and dry bulb temperatures or relative humidity and temperature.

d. Test each section of cable individually.

e. Individually test each conductor with all other conductors grounded. Ground all shields.

f. Terminations shall be adequately corona-suppressed by guard ring, field reduction sphere, or other suitable methods as necessary.

g. Insure that the maximum test voltage does not exceed the limits for terminators specified in IEEE Standard 48 or manufacturer's specifications.

h. Apply a dc high-potential test in at least five equal increments until maximum test voltage is reached. No increment shall exceed the voltage rating of the cable. Record dc leakage current at each step after a constant stabilization time consistent with system charging current.

i. Raise the conductor to the specified maximum test voltage and hold for 15 minutes on shielded cable and five minutes on nonshielded cable. Record readings of leakage current at 30 seconds and one minute and at one minute intervals thereafter.

j. Reduce the conductor test potential to zero and measure residual voltage at discrete intervals.

k. Apply grounds for a time period adequate to drain all insulation stored charge.

l. When new cables are spliced into existing cables, the dc high-potential test shall be performed on the new cable prior to splicing in accordance with this Section. After test results are approved for new cable and the splice is completed, an insulation-resistance test and a shield-continuity test shall be performed on the length of new and existing cable including the splice. After a satisfactory insulation-resistance test, a dc high-potential test shall be performed on the cable utilizing a test voltage acceptable to Owner and not exceeding 60 percent of factory test value.

C. Test Values

1. Shielding must exhibit continuity. Investigate resistance values in excess of ten ohms per 1,000 feet of cable.

2. Graphic plots may be made of leakage current versus step voltage at each increment and leakage current versus time at final test voltages.

   a. The step voltage slope should be reasonably linear.

   b. Capacitive and absorption current should decrease continually until steady state leakage is approached.

3.5 METAL-ENCLOSED BUSWAYS

A. Visual and Mechanical Inspection

1. Compare equipment nameplate data with drawings and specifications.

2. Inspect busway for physical damage and correct connection in accordance with single-line diagram.

3. Inspect for appropriate bracing, suspension, alignment, and enclosure ground.

4. Verify tightness of accessible bolted electrical connections by calibrated torque-wrench method in accordance with manufacturer's published data.

5. Confirm physical orientation in accordance with manufacturer's labels to insure adequate cooling.

6. Examine outdoor busway for removal of "weep-hole" plugs, if applicable, and the correct installation of joint shield.

B. Electrical Tests

1. Measure insulation resistance of each busway, phase-to-phase and phase-to-ground for one minute, in accordance with manufacturers published data.

2. Perform an overpotential test on each busway, phase-to-ground with phases not under test grounded, in accordance with manufacturer's published data. The test voltage shall be applied for one minute.

3. Perform contact-resistance test on each connection point of noninsulated busway. On insulated busway, measure resistance of assembled busway sections and compare values with adjacent phases.

4. Perform phasing test on each busway tie section energized by separate sources. Tests must be performed from their permanent sources.

5. Perform phase arrangement check to ensure the bus bars are arranged “A”, “B”, “C”, from front-to-back and/or top-to-bottom and/or left-to-right as viewed from the front of the equipment.

C. Test Values

1. Bus bolt-torque levels shall be in accordance with manufacturers published data.

2. Insulation-resistance test voltages and resistance values shall be in accordance with manufacturer's specifications. Minimum resistance values are for a nominal 1000-foot busway run or megohms for 1000 feet. For busway runs over 1000 feet, derate accordingly by the formula:

   R_{1000ft} = Measured Resistance x Length of Run/1000

   Values of insulation resistance less than manufacturer's minimum should be investigated. Overpotential tests should not proceed until insulation-resistance levels are raised above minimum values.

3. Overpotential test voltages shall be applied in accordance with manufacturer's recommendations. The insulation shall withstand the overpotential test voltage applied.

3.6 POWER CIRCUIT BREAKERS

A. Visual and Mechanical Inspection

1. Compare nameplate data with drawings and specifications.

2. Inspect physical and mechanical condition.

3. Confirm correct application of manufacturer's recommended lubricants.

4. Inspect anchorage, alignment, and grounding. Inspect arc chutes. Inspect moving and stationary contacts for condition, wear, and alignment.

5. Verify that all maintenance devices are available for servicing and operating the breaker.

6. Verify that primary and secondary contact wipe and other dimensions vital to satisfactory operation of the breaker are correct.

7. Perform all mechanical operator and contact alignment tests on both the breaker and its operating mechanism.

8. Verify tightness of accessible bolted bus connections by calibrated torque-wrench method. Refer to manufacturer's instructions for correct torque levels.

9. Check cell fit and element alignment.

10. Check racking mechanism.

B. Electrical Tests

1. Perform a contact-resistance test.

2. Perform an insulation-resistance test at 1000 volts dc from pole-to-pole and from each pole-to-ground with breaker closed and across open contacts of each phase.

3. Perform an insulation-resistance test at 1000 volts dc on all control wiring. Do not perform the test on wiring connected to solid state components.

4. Make adjustments for the final settings in accordance with the coordination study supplied by the Electrical Contractor.

5. Determine minimum pickup current by primary current injection.

6. Determine long-time delay by primary current injection.

7. Determine short-time pickup and delay by primary current injection.

8. Determine ground-fault pickup and delay by primary current injection.

9. Determine instantaneous pickup value by primary current injection.

10. Verify the calibration of all functions of the trip unit by means of secondary injection.

11. Activate auxiliary protective devices, such as ground-fault or undervoltage relays, to insure operation of shunt trip devices. Check the operation of electrically-operated breakers in their cubicles.

12. Verify correct operation of any auxiliary features such as trip and pickup indicators, zone interlocking, electrical close and trip operation, trip-free, and anti-pump function.

13. Check charging mechanism.

C. Test Values

1. Bolt-torque levels shall be in accordance with manufacturers published data.

2. Compare microhm or millivolt drop values to adjacent poles and similar breakers. Investigate deviations of more than 25 percent.

3. Insulation resistance shall not be less than 100 megohms. Investigate values less than 100 megohms.

4. Trip characteristics of breakers shall fall within manufacturer's published time-current tolerance bands.

3.7 GROUNDING SYSTEMS

A. Visual and Mechanical Inspection

1. Verify ground system is in compliance with drawings and specifications.

B. Electrical Tests

1. Perform fall-of-potential test or alternative in accordance with IEEE Standard 81-1991 on the main grounding electrode or system.

2. Perform point-to-point tests to determine the resistance between the main grounding system and all major electrical equipment frames, system neutral, and/or derived neutral points.

C. Test Values

1. The resistance between the main grounding electrode and ground should be no greater than five ohms for commercial or industrial systems and one ohm or less for generating or transmission station grounds unless otherwise specified by the owner. (Reference: IEEE Standard 142.)

2. Investigate point-to-point resistance values which exceed 0.5 ohm.

3.8 GROUND-FAULT PROTECTION SYSTEMS

A. Visual and Mechanical Inspection

1. Compare equipment nameplate data with drawings and specifications.

2. Visually inspect the components for damage and errors in polarity or conductor routing.

a. Verify that ground connection is made ahead of neutral disconnect link and on the line side of any ground fault sensor.

b. Verify that neutral sensors are connected with correct polarity on both primary and secondary.

c. Verify that all phase conductors and the neutral pass through the sensor in the same direction for zero sequence systems.

d. Verify that grounding conductors do not pass through zero sequence sensors.

e. Verify that the grounded conductor is solidly grounded.

3. Verify tightness of all electrical connections including control circuits.

4. Verify correct operation of all functions of the self-test panel.

5. Verify that the control power transformer has adequate capacity for the system.

6. Set pickup and time-delay settings in accordance with the settings provided in the Owner's specifications. Record appropriate operation and test sequences as required by NEC Article 230-95.

B. Electrical Tests

1. Measure the system neutral-to-ground insulation resistance with the neutral disconnect link temporarily removed. Replace neutral disconnect link after testing.

2. Perform the following pickup tests using primary injection:

a. Verify that the relay does not operate at 90 percent of the pickup setting.

b. Verify pickup is less than 125 percent of setting or 1,200 amperes, whichever is smaller.

3. For summation type systems utilizing phase and neutral current transformers, verify correct polarities by applying current to each phase-neutral current transformer pair. This test also applies to molded-case breakers utilizing an external neutral current transformer.

a. Relay should operate when current direction is the same relative to polarity marks in the two current transformers.

b. Relay should not operate when current direction is opposite relative to polarity marks in the two current transformers.

4. Measure time delay of the relay at 150 percent or greater of pickup.

5. Verify reduced control voltage tripping capability: 55 percent for ac systems and 80 percent for dc systems.

6. Verify blocking capability of zone interlock systems.

C. Test Values

1. System neutral-to-ground insulation shall be a minimum of one megohm.

2. Insulation resistance values shall be in accordance with NETA standards.

3. Relay timing shall be in accordance with manufacturer's specifications but must be no longer than one second at 3,000 amperes.

3.9 AUTOMATIC TRANSFER SWITCHES

A. Visual and Mechanical Inspection

1. Compare equipment nameplate data with drawings and specifications.

2. Inspect physical and mechanical condition.

3. Confirm correct application of manufacturer's recommended lubricants.

4. Verify that manual transfer warnings are attached and visible.

5. Verify tightness of all control connections.

6. Verify tightness of accessible bolted electrical connections by calibrated torque-wrench method in accordance with manufacturer's published data.

7. Perform manual transfer operation.

8. Verify positive mechanical interlocking between normal and alternate sources.

B. Electrical Tests

1. Measure contact-resistance.

2. Perform insulation-resistance tests, phase-to-phase and phase-to-ground, with switch in both source positions.

3. Verify settings and operation of control devices.

4. Calibrate and set all relays and timers as indicated elsewhere in these specifications.

5. Perform automatic transfer tests:

   a. Simulate loss of normal power.
   b. Return to normal power.
   c. Simulate loss of emergency power.
   d. Simulate all forms of single-phase conditions.

6. Verify correct operation and timing of the following functions:

   a. Normal source voltage-sensing relays.
   b. Engine start sequence.
   c. Time delay upon transfer.
   d. Alternate source voltage-sensing relays.
   e. Automatic transfer operation.
   f. Interlocks and limit switch function.
   g. Time delay and retransfer upon normal power restoration.
   h. Engine cooldown and shutdown feature.

7. Perform phase arrangement check to ensure the bus bars are arranged “A”, “B”, “C”, from front-to-back and/or top-to-bottom and/or left-to-right as viewed from

the front of the equipment. In addition, ensure correct bus phasing from each source.

C. Test Values

1. Bolt-torque levels shall be in accordance with manufacturers published data.

2. Insulation-resistance test voltages and minimum values shall be in accordance with NETA standards.

3. Compare microhm values to adjacent poles and similar switches. Investigate deviations of more than 25 percent.

3.10 SYSTEM FUNCTION TESTS

A. Perform system function tests upon completion of equipment tests. It is the purpose of system function tests to prove the correct interaction of all sensing, processing, and action devices.

B. Implementation

1. Develop test parameters for the purpose of evaluating performance of all integral components and their functioning as a complete unit within design requirements. Perform these tests.

2. Verify the correct operation of all interlock safety devices for fail-safe functions in addition to design function.

3. Verify the correct operation of all sensing devices, alarms, and indicating devices.

END OF SECTION

SECTION 260584 – THROUGH-PENETRATION FIRESTOP SYSTEMS

PART 1 – GENERAL

1.1 RELATED DOCUMENTS

A. Drawings and general provisions of the Contract, including General and Supplementary Conditions, Section 26 0510 and Division 1 Specification Sections, apply to this Section.

1.2 WORK INCLUDED

A. Through-penetration firestop systems for penetrations through the following fire-resistance-rated assemblies, including both empty openings and openings containing penetrating items:

1. Floors
2. Roofs
3. Walls and partitions
4. Smoke barriers
5. Construction enclosing compartmentalized areas.
6. Other rated assemblies.

1.3 RELATED SECTIONS

A. Examine all drawings and criteria sheets and all other Sections of the Specifications for requirements which affect work under this Section whether or not such work is specifically mentioned in this Section.

1.4 REFERENCES

A. American Society for Testing and Materials Standards (ASTM):

1. ASTM E84: Standard Test Method for Surface Burning Characteristics of Building Materials

2. ASTM E814: Standard Test Methods for Fire Tests of Through-Penetration Firestops

3. ASTM E119: Standard Test Methods for Fire Tests of Building Construction Materials

4. ASTM E1399: Standard Test Methods for Cyclic Movement and Measuring of Joint Systems

5. ASTM E1725: Standard Test Methods for Fire Tests of Fire-Resistive Barrier Systems of Electrical Systems Components

6. ASTM E1966: Standard Test Methods for Fire Tests of Joints

B. Underwriters Laboratories, Inc. (UL):

1. UL 723 Surface Burning Characteristics of Building Materials

2. UL 1479 Fire Tests of Through-Penetration Firestops, including optional air leak test

3. UL 2079 Fire Test of Building Joint Firestop systems

4. UL Fire Resistance Directory (Component Listing Test Criterion)

C. National Fire Protection Agency (NFPA)

1. NFPA 80 Standard Fire Door and Window Assembly Tolerances

2. NFPA 252 Standard Fire Test for Fire Rated Doors (not specified for positive or negative furnace test pressure)

3. NFPA 257 Standard Fire Test for Fire Rated Windows (not specified for positive or negative furnace test pressure)

4. NFPA 101 Life Safety Code

5. NEC 70 National Electrical Code

1.5 PERFORMANCE REQUIREMENTS

A. General: For the following constructions, provide through-penetration firestop systems that are produced and installed to resist spread of fire according to requirements indicated, resist passage of smoke and other gases, and maintain original fire-resistance rating of assembly penetrated.

1. Fire-resistance-rated load-bearing walls, including partitions, with fire-protection-rated openings.

2. Fire-resistance-rated non-load-bearing walls, including partitions, with fire-protection-rated openings.

3. Fire-resistance-rated floor assemblies.

4. Fire-resistance-rated roof assemblies.

B. F-Rated Systems: Provide through-penetration firestop systems with F-ratings indicated, as determined per ASTM E 814, but not less than that equaling or exceeding fire-resistance rating of constructions penetrated.

C. T-Rated Systems: For the following conditions, provide through-penetration firestop systems with T-ratings indicated, as well as F-ratings, as determined per ASTM E 814, where systems protect penetrating items exposed to potential contact with adjacent materials in occupiable floor areas.

1. Penetrations located outside wall cavities.

2. Penetrations located outside fire-resistive shaft enclosures.

3. Penetrations located in construction containing fire-protection rated openings.

4. Penetrating items larger than 4-inch diameter normal pipe or 16 sq. in. in overall cross-sectional area.

D. For through-penetration firestop systems exposed to view, traffic, moisture, and physical damage, provide product that after curing do not deteriorate when exposed to these conditions both during and after construction.

1. For floor penetrations with annular spaces exceeding 4 inches in width and exposed to possible loading and traffic, provide firestop systems capable of supporting floor loads involved either by installing floor plates or by other means.

2. For penetrations involving insulated piping, provide through-penetration firestop systems not requiring removal of insulation.

E. For through-penetration firestop systems exposed to view, provide products with flame-spread ratings of less than 25 and smoke-development ratings of less than 50, as determined per ASTM E 84.

1.6 SUBMITTALS

A. Prepare and submit shop drawings in accordance with the requirements hereinbefore specified, and with Section 01 3300 – Submittal Procedures in the manner described therein, modified as noted hereinafter.

B. See Section 26 0510 and General Conditions for additional requirements.

C. Product Data: For each type through-penetration firestop system product indicated.

D. Shop Drawings: For each through-penetration firestop system show each kind of construction condition penetrated, relationships to adjoining construction, and kind of penetrating items. Include firestop design designation of testing and inspecting agency acceptable to authorities having, jurisdiction that evidences compliance with requirements for each condition indicated.

1. Submit documentation, including illustrations, from a qualified testing and inspecting agency that is applicable to each through-penetration firestop system configuration for construction and penetrating items.

2. Where Project conditions require modification of qualified testing and inspecting agency's illustration to suit a particular through-penetration firestop condition, submit illustration, with modifications marked, approved by through-penetration firestop system manufacturer's fire-protection engineer.

E. Submit complete plans indicating clearly where all seals are located and the type of seal to be used at that location

F. Qualification Data: For firms and persons specified to demonstrate their capabilities and experience. Include lists of completed projects with project names and addresses, names and addresses of architects and owners, and other information specified.

G. Product Certificates: Signed by manufacturers of through-penetration firestop system products certifying that products furnished comply with requirements.

H. Product Test Reports: From a qualified testing agency indicating through-penetration firestop system complies with requirements, based on comprehensive testing of current products.

1.7 QUALITY ASSURANCE

A. Installer Qualifications: An experienced installer who has completed through-penetration firestop systems similar in material, design, and extent to that indicated for this Project and whose work has resulted in construction with a record of successful in-service performance.

B. Source Limitations: Obtain through-penetration firestop systems, for each kind of penetration and construction condition indicated, from a single manufacturer.

C. Fire-Test-Response Characteristics: Provide through-penetration firestop systems that comply with the following requirements and those specified in "Performance Requirements" Article:

1. Through-Penetration Firestop Systems tests are performed by a qualified testing and inspecting agency. A qualified testing and inspecting agency is UL, ITS, or another agency performing testing and follow-up inspection services for firestop systems acceptable to authorities having jurisdiction.

2. Through-penetration firestop systems are identical to those tested per ASTM E 814. Provide rated systems complying with the following requirements:

a. Through-penetration firestop system products hear classification marking of qualified testing and inspecting agency.

b. Through-penetration firestop systems correspond to those indicated by reference to through-penetration firestop system designations listed by the following:

1) UL in "Fire Resistance Directory."
2) ITS in "Directory of Listed Products."

1.8 DELIVERY, STORAGE, AND HANDLING

A. Deliver through-penetration firestop system products to Project site in original, unopened containers or packages with intact and legible manufacturers' labels

identifying product and manufacturer, date of manufacture; lot number; shelf life, if applicable, qualified testing and inspecting agency's classification marking applicable to Project; curing time; and mixing instructions for multi-component materials.

B. Store and handle materials for through-penetration firestop systems to prevent their deterioration or damage due to moisture, temperature changes, contaminants, or other causes.

1.9 PROJECT CONDITIONS

A. Environmental Limitations: Do not install through-penetration fires top systems when ambient or substrate temperatures are outside limits permitted by through penetration firestop system manufacturers or when substrates are wet due to rain, frost, condensation, or other causes.

B. Ventilate through-penetration firestop systems per manufacturer's written instructions by natural means or, where this is inadequate, forced-air circulation.

1.10 COORDINATION

A. Coordinate construction of openings and penetrating items to ensure that through-penetration firestop systems are installed according to specified requirements.

B. Coordinate sizing of sleeves, openings, core-drilled holes, or cut openings to accommodate through-penetration firestop systems.

C. Notify Owner's inspecting agency at least seven days in advance of through-penetration firestop system installations; confirm dates and times on days preceding each series of installations.

D. Do not cover up through-penetration firestop system installations that will become concealed behind other construction until Owner's inspecting agency and building inspector, if required by authorities having jurisdiction, have examined each installation.

PART 2 – PRODUCTS

2.1 MANUFACTURERS

A. Acceptable manufacturers subject to compliance with the specifications shall be one of following:

1. A/D Fire Protection Systems, Inc.
2. Hilti Construction Chemicals, Inc.
3. Nelson Firestop Products
4. RectorSeal Corporation (The)
5. Specified Technologies Inc.
6. 3M Fire Protection Products
7. Tremco

8. United Stated Gypsum Company

2.2 FIRESTOPPING GENERAL

A. Compatibility: Provide through-penetration firestop systems that are compatible with one another, with the substrates forming openings, and with the items, if any, penetrating through-penetration firestop systems, under conditions of service and application, as demonstrated by through-penetration firestop system manufacturer based on testing and fired experience.

B. Accessories: Provide components for each through-penetration firestop system that are needed to install fill materials and to comply with "Performance Requirements" Article. Use only components specified by through-penetration firestop system manufacturer and approved by the qualified testing and inspecting agency for firestop systems indicated. Accessories include, but are not limited to, the following items:

1. Permanent forming/damming/backing materials, including the following:

a. Slag-/rock-wool-fire insulation.

b. Sealants used in combination with other forming/damming/backing materials to prevent leakage of fill materials in liquid state.

c. Fire-rated form board

2. Temporary forming materials

3. Substrate primers

4. Collars

5. Steel sleeves

2.3 MIXING

A. For those products requiring mixing before application, comply with through-penetration firestop system manufacturer's written instructions for accurate proportioning of materials, water (if required), type of mixing equipment, selection of mixer speeds mixing containers, mixing time, and other items or procedures needed to produce products of uniform quality with optimum performance characteristics for application indicated.

PART 3 – EXECUTION

3.1 EXAMINATION

A. Examine substrates and conditions, with Installer present, for compliance with requirements for opening configurations, penetrating items, substrates, and other conditions affecting performance.

B. Proceed with installation only after unsatisfactory conditions have been corrected.

3.2 PREPARATION

A. Surface Cleaning: Clean out openings immediately before installing through-penetration firestop systems to comply with written recommendations of firestop systems manufacturer and the following requirements:

1. Remove from surfaces of openings substrates and from penetrating items foreign materials that could interfere with adhesion of through-penetration firestop systems.

2. Clean opening substrates and penetrating items to produce clean, sound surfaces capable of developing optimum bond with through-penetration firestop systems. Remove loose particles remaining from cleaning operation.

3. Remove laitance and form-release agents from concrete.

B. Priming: Prime substrates where recommended in writing by through-penetration firestop system manufacturer using that manufacturer's recommended products and methods. Confine primers to areas of bond; do not allow spillage and migration onto exposed surfaces.

C. Masking Tape: Use masking tape to prevent through-penetration firestop systems from contacting adjoining surfaces that will remain exposed on completion of Work and that would otherwise be permanently stained or damaged by such contactor by cleaning methods used to remove smears from firestop systems materials. Remove tape as soon as possible without disturbing firestop system's seal with substrates.

3.3 THROUGH-PENETRATION FIRESTOP SYSTEM INSTALLATION

A. General: Install through-penetration firestop systems to comply with "Performance Requirements" Article and firestop system manufacturer's written installation instructions and published drawings for products and applications indicated.

B. Install forming/damming/backing materials and other accessories of types required to support fill materials during their application and in the position needed to produce cross-sectional shapes and depths required to achieve fire ratings indicated.

1. After installing fill materials, remove combustible forming materials and other accessories not indicated as permanent components of firestop systems.

C. Install fill materials for firestop systems by proven techniques to produce the following results:

1. Fill voids and cavities formed by openings, forming materials, accessories, and penetrating items as required to achieve fire-resistance ratings indicated.

2. Apply materials so they contact and adhere to substrates formed by openings and penetrating items.

3. For fill materials that will remain exposed after completing Work, finish to produce smooth, uniform surfaces that are flush with adjoining finishes.

3.4 FIELD-QUALITY CONTROL

A. Inspecting Agency: Owner will engage a qualified independent inspecting agency to inspect through-penetration firestop systems and to prepare test reports.

1. Inspecting agency will state in each report whether inspected through-penetration firestop systems comply with or deviate from requirements.

B. Proceed with enclosing through-penetration firestop systems with other construction only after inspection reports are issued.

C. Where deficiencies are found, repair or replace through-penetration firestop systems so they comply with requirements.

3.5 IDENTIFICATION

A. Identify through-penetration firestop systems with pressure-sensitive, self-adhesive, preprinted vinyl labels. Attach labels permanently to surfaces of penetrated construction on both sides of each firestop system installation where labels will be visible to anyone seeking to remove penetrating items or firestop systems. Include the following information on labels.

1. The words: "Warning-Through-Penetration Firestop System-Do Not Disturb. Notify Building Management of Any Damage."
2. Contractor's name, address, and phone number.
3. Through-penetration firestop systems designation of applicable testing and inspecting agency.
4. Date of installation.
5. Through-penetration firestop systems manufacturer's name.
6. Installer's name.

3.6 CLEANING AND PROTECTION

A. Clean off excess fill materials adjacent to openings as Work progresses by methods and with cleaning materials that are approved in writing by through-penetration firestop system manufacturers and that do not damage materials in which openings occur.

B. Provide final protection and maintain conditions during and after installation that ensure through-penetration firestop systems are without damage or deterioration at time of Substantial Completion. If despite such protection, damage or deterioration occurs, cut out and remove damaged or deteriorated through-penetration firestop systems immediately and install new materials to produce through-penetration firestop systems complying with specified requirements.

END OF SECTION

SECTION 260920 – LIGHTING CONTROL SYSTEM

PART 1 - GENERAL

1.1 RELATED DOCUMENTS

A. All of the Contract Documents, as listed on the Table of Contents and including General and Supplementary Conditions and Division 01, General Requirements, shall be included in, and made part of, this Section.

1.2 DESCRIPTION OF WORK

A. Furnish and install a complete lighting control system. System shall include lighting control relays and microprocessor based programmable lighting controllers. They system shall include switches, photocells and other control devices as required including, but not limited to, wire, conduit and other materials required for the installation. Exact quantities and equipment configurations shall be determined by the equipment manufacturer based on plans, specifications and control schedules.

B. The work under this Contract shall also include all labor, materials, tools, equipment, transportation, insurance, temporary protection, supervision and incidental items essential for proper installation and operation, even though not specifically mentioned or indicated on the drawings, but which are usually provided or are essential for proper installation and operation of all systems as indicated on the drawings and specified herein.

C. The specifications and drawings describe the minimum requirements that must be met by the Electrical Subcontractor for the installation of all work as shown on the drawings and as specified hereinunder.

1.3 RELATED WORK

A. For work to be included as part of this Section, to be furnished and installed by the Electrical Subcontractor, refer to the Related Work section of Specification Section 26 0510.

B. Carefully examine all of the Contract Documents, criteria sheets and all other Sections of the specifications for requirements which affect work under this Section, whether or not such work is specifically mentioned in this Section.

1.4 REFERENCES

A. The control panels shall be tested and listed under the UL 916 Energy Management Equipment standards by a nationally recognized testing laboratory

B. The control system shall comply with all applicable National Electrical Codes regarding electrical wiring standards.

C. The control system shall comply with all applicable portions of the NEMA standards regarding the types of electrical equipment enclosures.

D. All control equipment shall undergo strict inspection standards. The equipment shall be previously tested and burned-in at the factory prior to installation.

1.5 QUALITY ASSURANCE

A. The manufacturers listed within this specification have been preselected for use on this project. No submittal will be accepted from a manufacturer other than specified.

B. To ensure system compatibility, all components of the lighting control system including panels, relays, etc. shall be the products of one manufacturer.

1.6 WARRANTY

A. Attention is directed to provisions of the General Requirements, Supplementary General Requirements and Section 26 0510 regarding guarantees and warranties for the work under this Contract.

B. The manufacturer shall warrant each new system for a period of two (2) years from the date of start-up of the equipment by one of the manufacturer's representatives, to be free from defects in the material and workmanship under the conditions of normal use and specified ambient temperature when installed and operated under the manufacturer's product specifications in accordance with the applicable National Electrical Code and Safety of Standards of Underwriter's Laboratory.

C. This warranty covers the diagnostics of problems with the lighting control system and the cost of labor for repair, replacement, or adjustment of any and all the manufacturer's components, as necessary to restore the system to normal operation.

D. The warrantee shall cover the complete system as specified herein including, but not limited to:

1. Control panels
2. Electronics
3. Control stations
4. Motion sensors

E. This warranty shall not be required to cover:

1. Damage or malfunction diagnosed by the manufacturer's qualified service representative due to above, misuse, or accident, such as:

   a. Use of incorrect line voltages;
   b. Use of incorrect fuses;
   c. Failure to follow operating instructions provided by the manufacturer;
   d. Failure to maintain and operate equipment in accordance with applicable National Electrical code provisions, wand with Safety Standards of Underwriter's Laboratories;

e. Failure to maintain equipment under specified ambient temperature;
f. Vandalism
g. Fire, flood, “Acts of God”, and other problems beyond the control of the manufacturer.

2. Unauthorized repairs or adjustments.

3. The cost of repairing or replacing other property that is damaged when the lighting control system does not work properly.

1.7 QUALIFICATIONS

A. The manufacturer of the assembly shall be the manufacturer of the major components within the assembly.

B. For the equipment specified herein, the manufacturer shall be ISO 9001 certified.

C. The manufacturer of this equipment shall have produced similar electrical equipment for a minimum period of five (5) years. When requested by the Engineer, an acceptable list of installations with similar equipment shall be provided demonstrating compliance with this requirement.

1.8 MANUFACTURERS

A. The following manufacturers shall be considered acceptable to supply the dimming system as herein specified:

1. Lithonia
2. ILC
3. General Electric

B. The listing of a manufacturer as "acceptable" does not imply automatic approval. It is the sole responsibility of the Electrical Subcontractor to ensure that any price quotations received and submittals made are for devices that meet or exceed the specifications included herein.

1.9 SUBMITTALS

A. Prepare and submit shop drawings in accordance with the requirements hereinbefore specified, and with Section 01 3300 – Submittal Procedures in the manner described therein, modified as noted hereinafter.

B. All shop drawings shall have clearly marked the appropriate specification number or drawing designation for identification of the submittal.

C. Disposition of shop drawings shall not relieve the Contractor from the responsibility for deviations from drawings or specifications unless he has submitted, in writing, a letter itemizing or calling attention to such deviations at time of submission and secured written approval from the Architect, nor shall such disposition of shop drawings relieve the Contractor from responsibility for errors in shop drawings or schedules.

D. Submit complete manufacturer's product data of all materials and systems to the Architect for approval, consisting of complete product description and specifications, complete performance test data, complete preparation and installation instructions, and all other pertinent technical data required for complete product and product use information.

E. The manufacturer shall provide a complete submittal package for approval prior to shipment. The package shall consist of the following:

1. Product cuts and specifications.
2. Bill of materials.
3. Warranty information.
4. Riser diagram indicating wiring requirements.
5. Point-to-point field wiring instructions.
6. Detailed layout of control stations.

F. In addition to the submittals, a set of installation, operator and maintenance manuals shall be shipped with the equipment.

PART 2 - PRODUCTS

2.1 LIGHTING CONTROL PANELS

A. General

1. The lighting control system for the building shall consist of lighting relay control panels with programmable switch inputs. Each panel shall provide a minimum of 32 switch inputs.

2. The system shall permit customization of switch inputs, analog inputs and telephone override control. The user may determine how each control input functions. Inputs may be customized to “no OFF’s”, “no ON’s”, “no timer”, “ignored” and/or “setback”. The system shall determine if the control input is available or unavailable for defined times, specific days and holidays.

3. The control system shall provide total networking capability between control panels. Panels shall permit data sharing for global control. All inputs shall be transferable over the network to create any switching pattern.

4. The system shall support the creation of control panels via a touch screen interface. The lighting control system shall permit multiple touch screens. Touch screen control shall permit any authorized user to operate the lighting to any event required. The user may overlay or create any graphic desired through an off-the-shelf PC graphic/paint program, thus permitting the user to reconfigure the touch screen as the building requirements change.

5. The control system of each panel shall allow stand-alone control of each panel. Each panel shall have programmable inputs, time-of-day control and analog control (i.e., temperature, kW, photocell, etc.) Control system shall include:

a. Time-of day schedules

b. Momentary or maintained inputs

c. Analog inputs

1) Temperature control
2) Photocell control presetting footcandle level
3) Electrical power monitoring

6. Control panels shall include a “Warn OFF” (flash the lights) to inform occupants of an impending OFF command. The Warn OFF command shall allow 10 minutes for the occupants to override the lighting control system or exit the premises. Overrides shall be permitted for after hours use or cleaning. The overrides shall be hardwired inputs or voice-guided touch-tone telephone control.

7. The control panel shall log all change-of-state information. Time and date stamps shall be attached to all overrides, analog values and relay operations.

8. Programming of the system shall be through a local terminal or may be accomplished off-line through a PC running the appropriate software. Central programming software shall be provided by the manufacturer and shall allow multiple users to access the lighting control system simultaneously.

B. Contact Inputs

1. The control system shall allow dry contacts for override purposes. Momentary or maintained contacts shall be supported as three-wire (momentary) or two-wire (SPST) inputs, respectively. Inputs shall be dry contacts (24 volts DC @ 12 mA internally supplied to the inputs). An input shall be capable of controlling any number of relays for override control.

C. Analog Inputs

1. Each control panel shall be capable of monitoring and controlling outputs from analog sensors. All control panels shall permit temperature, photocell and kWh monitoring.

2. Photocells

a. The control system shall accept indoor, skylight and outdoor photo-sensing heads. Photo-sensing control shall permit the user to specify the actual footcandle level where desired switching shall occur. An internal deadband timer shall exist to prevent the lights under photo-sensor control to toggle inadvertently as the sensor passes through the control threshold.

3. kWh Monitoring Hardware

a. The control panel shall be capable of monitoring electrical power demand and consumption. Electrical power monitoring shall accept both current

transformers and pulse metering. Kilowatt power monitoring through current and potential transformers shall provide true power monitoring.

4. Temperature Monitoring Hardware

   a. The control system shall accept temperature monitoring hardware for monitoring or building control. Temperature inputs shall consist of both monolithic integrated circuit temperature sensors and 4-20 mA temperature sensors. The control panel shall provide default temperature sensing ranges that are menu selectable.

5. Programmable 4-20 mA Sensor Loop

   a. The control system shall support 4-20 mA sensor loops. These sensors shall provide additional flexibility for building control. The system shall accept both sourcing (remote powered) and sinking (loop powered) 4-20 mA sensors. Control systems that do not provide analog sensor interfaces shall not be acceptable. Analog inputs shall be user selectable for 4-20 mA sinking or sourcing.

D. Hardware Requirements

1. The lighting control system shall allow pilot lights on wall switches. The control panel shall provide the power to illuminate the pilot light and the light shall confirm relay operation.

2. The lighting control system shall allow control of remote mounted relays. The control panel shall provide power and control to the remote relays via twisted, three conductor cable.

E. Diagnostic Aides

1. Each control panel shall incorporate diagnostic aids for confirmation of proper operation or, in case of failure, to guide the user for troubleshooting of the system. The control panel shall employ light emitting diodes (LED's) that visibly indicate:

   a. Power
   b. Network communications
   c. System operational
   d. RS-232 transmit and receive
   e. Power on
   f. Memory confirmation
   g. Broadcast reception
   h. On/off status of each relay
   i. Memory cleared

F. Status Indication of Relays

1. The system shall provide visible status indication of all relays through the window of each panel. The visual indication shall include ON, OFF and relay number.

G. Service Overrides

1. The control panel shall include a three position service override for each relay and a master control switch for the entire panel. The service overrides shall be accessible from behind a locked door.

2. The individual relay service override shall be a three position switch with ON, OFF and AUTO positions. The system shall remember the last command to the relay. Upon returning the override switch to the AUTO position, the relay shall return to the most recent command state, even if the last command occurred during the service override condition. The relay's red (OFF) LED or green (ON) LED shall illuminate to indicate the status of the relay whether the switch is in the ON, OFF or AUTO position.

3. The master service override shall be a single, three position switch with ALL ON, ALL OFF and AUTO positions. This switch shall override and supercede all commands from the logic board when the switch is in the ALL ON (green LED) or ALL OFF (red LED) position. The LED's shall be in proximity to the switch. The master switch shall be functional with the logic board either removed or disabled.

4. The system shall remember the last command to each individual relay. Upon restoration of the master switch to the AUTO position, all relays shall return to the most recent command state even if the last command occurred during the master override condition.

H. Battery Back-Up

1. The system shall utilize a memory back-up device that is system integrated and maintenance free. Both the system clock and data in RAM shall be protected against power interruptions lasting as long as 7 days. Power restoration for as little as 30 minutes shall fully restore the battery to its full 7 day protection capability.

I. Printer Port

1. The control panel shall include a serial printer port with a baud rate of 1,200 for local printing directly from the control panel. Each panel shall provide printouts of the programmed information within the control panel.

J. Network

1. The control system shall be capable of panel-to-panel communications over a high speed, hard wired data network. The network shall consist of wiring as required by the manufacturer.

K. Power Supply

1. The control panel shall incorporate the use of a multi-tapped transformer for its main power supply. The transformer shall allow 120 volt or 277 volt control power.

2.2 RELAYS

A. Relays shall be rated 20 amperes, 277 volt. Relays shall be magnetically held and shall include a 10 year warrantee.

B. Relays shall open upon loss of normal power to avoid creating a demand peak upon restoration of power. When normal power is restored, the system shall reset and the relays shall return to the position they were in, sequentially, prior to the outage within 10 seconds.

2.3 MODEM

A. The control panel shall include a serial communications port with a modem for external communications. The modem shall utilize Hayes compatibility standard and enable modem access as defined by the Bell 212A and CCITT V.22 protocol standards.

B. The system shall permit full screen video display terminal (VDT), local area network (LAN), on-site and off-site communications. The system shall be a multi-tasking system which shall permit more than one modem in operation at a time communicating on the network. Communication speed shall be a minimum of 2,400 baud.

2.4 PC BASED SOFTWARE

A. PC based software shall enable a computer to program the lighting control panels connected to the network. The software shall permit the authorized user to modify the control panel programming or configuration in either an on- or off-line mode. The software package shall store all programmed data and archive for future use.

Note: The system shall be programmable directly from the control panel. The system shall not require the use of a computer for programming.

B. The following features shall be available in the software:

1. Trend logging with set points (analog data)
2. Real time analog monitoring
3. kWh monitoring
4. Graphing of logged data
5. Exportation of logged data for data manipulation
6. Telecommunications
7. Password access (multiple levels)
8. Automatic upload of data from panels
9. Network status indication
10. Supervisor graphics interface
11. Touch screen programming

12. Tenant billing
13. Archive programs and all log information
14. Data base comparison checking
15. Uploading and downloading of programs

C. Tenant Billing Software

1. Provide tenant billing software integral to the PC based software. Billing information shall be stored in the panels for retrieval by the system authorized user. Tenant hours of use may be uploaded from the panel and compiled into the billing program for calculation. Logged information may be printed on monthly billing statements. Time and date information shall be available for each billing occurrence.

2.5 TELEPHONE OVERRIDES

A. The control panel shall provide software and hardware for a telephone override device. The telephone override device shall allow modem communications and touch-tone overrides from any touch-tone telephone.

B. Touch-tone interface shall permit the control panel to place override information onto the network, and the pre-assigned control points shall be commanded accordingly ON or OFF. All user interface shall be through the 12 touch-tone keys on a standard telephone. All entries into the override system shall be prompted from a digitized voice.

C. The telephone override device shall provide individual user control passwords to define a preset group designation (number of relays) and the duration of the telephone override.

2.6 ENCLOSURES

A. Each control panel shall be enclosed in a lockable NEMA 1 enclosure. The enclosure shall be manufactured of minimum 1/16 inch steel and shall include prepunched knockouts.

2.7 TOUCH SCREENS

A. The lighting control system shall include touch screens for user and/or event control. The system shall permit multiple touch screen control. The user may reconfigure, overlay or create any graphic representation for the touch screens through a standard graphics program. Building graphics superimposed onto the touch screen permit users intuitive use of the control system. The user shall have full control of the system from the touch screen and may lock-out unauthorized users from access.

PART 3 - EXECUTION

3.1 COOPERATION AND WORK PROGRESS

A. The Electrical work shall be carried on under the usual construction conditions, in conjunction with all other work at the site. The Electrical Subcontractor shall cooperate with the Architect, General Contractor, all other Subcontractors and equipment suppliers working at the site. The Electrical Subcontractor shall coordinate the work and proceed in a manner so as not to delay the progress of the project.

B. The Electrical Subcontractor shall coordinate his work with the progress of the building and other Trades so that he will complete his work as soon as conditions permit and such that interruptions of the building functions will be at a minimum. Any overtime hours worked or additional costs incurred due to lack of or improper coordination with other Trades or the Owner by the Electrical Subcontractor shall be assumed by him without any additional cost to the Owner.

C. The Electrical Subcontractor shall furnish information on all equipment that is furnished under this Section but installed under another Section to the installing Subcontractor as specified herein.

D. The Electrical Subcontractor shall provide all materials, equipment and workmanship to provide for adequate protection of all electrical equipment during the course of construction of the project. This shall also include protection from moisture and all foreign matter. The Electrical Subcontractor shall also be responsible for damage which he causes to the work of other Trades, and he shall remedy such injury at his own expense.

E. Waste materials shall be removed promptly from the premises. All material and equipment stored on the premises shall be kept in a neat and orderly fashion. Material or equipment shall not be stored where exposed to the weather. The Electrical Subcontractor shall be responsible for the security, safekeeping and damages, including acts of vandalism, of all material and equipment stored at the job site.

F. The Electrical Subcontractor shall be responsible for unloading all electrical equipment and materials delivered to the site. This shall also include all large and heavy items or equipment which require hoisting. Consult with the General Contractor for hoisting/crane requirements. During construction of the building, the Electrical Subcontractor shall provide additional protection against moisture, dust accumulation and physical damage of the main service and distribution equipment. This shall include furnishing and installing temporary heaters within these units, as approved, to evaporate excessive moisture and ventilate it from the room, as may be required.

G. It shall be the responsibility of the Electrical Subcontractor to coordinate the delivery of the electrical equipment to the project prior to the time installation of equipment will be required; but he shall also make sure such equipment is not delivered too far in advance of such required installation, to ensure that possible damage and deterioration of such equipment will not occur. Such equipment stored for an excessively long period of time (as determined in the opinion of the Architect) on the project site prior to installation may be subject to rejection by the Architect.

H. The Electrical Subcontractor shall erect and maintain, at all times, necessary safeguards for the protection of life and property of the Owner, Workmen, Staff and the Public.

I. Prior to installation, the Electrical Subcontractor has the responsibility to coordinate the exact mounting arrangement and location of electrical equipment to allow proper space requirements as indicated in the NEC. Particular attention shall be given in the field to group installations. If it is questionable that sufficient space, conflict with the work of other Subcontractors, architectural or structural obstructions will result in an arrangement which will prevent proper access, operation or maintenance of the indicated equipment, the Electrical Subcontractor shall immediately notify the Contractor and not proceed with this part of the Contract work until definite instructions have been given to him by the Architect.

3.2 INSTALLATION

A. The Electrical Subcontractor shall furnish all equipment, labor, system setup, and other services necessary for the proper installation of the devices as indicated on the drawings and specified herein. System setup shall include defining each dimmer's load type, assigning each load to a zone, and setting the control functions.

B. Unless specifically noted or indicated otherwise, all equipment and material specified in Part 2 of this specification or indicated on the drawings shall be installed under this Contract whether or not specifically itemized herein. This Section covers particular installation methods and requirements peculiar to certain items and classes or material and equipment.

C. The Electrical Subcontractor shall obtain detailed information from manufacturers of equipment provided under Part 2 of this specification as to proper methods of installation.

D. The Electrical Subcontractor shall obtain final roughing dimensions and other information as needed for complete installation of items furnished under other Sections or furnished by the Owner.

E. The Electrical Subcontractor shall keep fully informed of size, shape and position of openings required for material and equipment provided under this and other Sections. Ensure that openings required for work of this Section are coordinated with work of other Sections. Provide cutting and patching as necessary.

F. All miscellaneous hardware and support accessories, including support rods, nuts, bolts, screws and other such items, shall be of a galvanized or cadmium plated finish or of another approved rust-inhibiting coating.

G. Throughout this Section where reference is made to steel channel supports, it shall be understood to mean that the minimum size shall be 1 5/8" mild strip steel with minimum wall thickness of 0.105", similar to Unistrut P1000 or equal products manufactured by Kindorf or Husky Products Co.

3.3 MATERIALS AND WORKMANSHIP

A. All materials and equipment shall be new and unused and shall meet requirements of the latest Standards of NEMA, UL, IPCEA, ANSI and IEEE. Equipment shall have

components required or recommended by OSHA, applicable NFPA documents and shall be UL listed and labeled.

B. Despite references in the specifications or on the drawings to materials or pieces of equipment by name, make or catalog number, such references shall be interpreted as establishing standards of quality for materials and performance.

C. Finish of materials, components and equipment shall not be less than Industry good practice. When material or equipment is visible or subject to corrosive or atmospheric conditions, the finish shall be as approved by the Architect.

D. Provide proper access to material or equipment that requires inspection, replacement, repair or service. If proper access cannot be provided, confer with the Architect as to the best method of approach to minimize effects of reduced access.

E. All work shall be installed in a neat and workmanlike manner and shall be done in accordance with all Local and State Codes.

F. The Owner will not be responsible for material, equipment or the installation of same before testing and acceptance.

3.4 FIELD SUPPORT

A. Manufacturer shall be capable of providing on-site service support within 24 hours anywhere in the continental U.S.A., and within five business days anywhere in the world, except where special visas are required.

3.5 SYSTEM COMMISSIONING

A. The system manufacturer shall provide on-site, factory technicians to thoroughly inspect the lighting control system installation and verify proper operation. The commissioning shall include three (3) separate visits to the project as defined below:

1. First Visit: Pre-Wire Inspection

a. Review all low voltage wiring requirements

1) Daisy chain
2) Maximum run lengths
3) Control and dimmer/switching panel links
4) Cable requirements

b. Review separation of power and low voltage/data wiring

c. Review wire labeling

d. Review information required on load schedules

e. Review lighting control panel locations and installation

f. Review control locations and addressing

g. Review analog phone lines requirements and computer jack locations

h. Review load circuit wiring

i. Review connections to “equipment by others”

j. Develop project schedule, including:

1) Contractor completion dates
2) Building opening dates
3) End user training
4) Contact names and numbers

2. Second Visit: Start-Up of System and Installation of System Software/data

a. Verify proper connection of

1) Power feeds
2) Load circuits

b. Verify proper connection of all controls

c. Energize the main panel and download system data program

d. Verify proper connection of panel links (low voltage/data) and address panels

e. Download system panel data to lighting control panels

f. Verify system operation control by control, circuit by circuit

g. Verify proper operation of interfacing equipment.

h. Verify operation of PC and installed programs

i. Verify operation of PC modem and test dial up access if phone line provided

j. Program and provide fine-tune adjustments of the following for each individual area with the Owner, Architect and Lighting Consultant present.

1) All preset scene values for each area.
2) Time clock events and functions.
3) Programming sequences

k. Obtain sign off on systems function

3. Third Visit: Operator/End-User Training

   a. Upgrade systems software to the latest revision level, if necessary

   b. Train the end users on system operation and software (Set-Up and Operate programs)

      1) Database file management
      2) How to set scene values
      3) How to set timeclock events
      4) How to set sequences, if applicable

   c. System maintenance and trouble shooting

      1) Job telephone numbers
      2) Who to call
      3) Diagnostics available
      4) Modem
      5) Telephone support
      6) Service visit

   d. Persons to be available for this visit should include:

      1) Manufacturer's Service Engineer
      2) Electrical maintenance staff
      3) System operators

B. The manufacturer shall carry in his bids sufficient time to accomplish the above requirements to the satisfaction of the Owner, Architect, Lighting Consultant and Engineer.

END OF SECTION

SECTION 261120 – SECONDARY UNIT SUBSTATIONS – NORMAL POWER DOUBLE ENDED

PART 1 - GENERAL

1.1 RELATED DOCUMENTS

A. All of the Contract Documents, as listed on the Table of Contents and including General and Supplementary Conditions and Division 01, General Requirements, shall be included in, and made part of, this Section.

1.2 DESCRIPTION OF WORK

A. The Electrical Contractor shall furnish and install the double ended secondary unit substation(s) complete from the incoming line terminals to the outgoing line terminals as specified herein and as shown on the contract drawings.

B. The secondary unit substation shall consist of primary equipment, transformer, and secondary equipment as specified below. The manufacturer of the unit substation shall furnish and coordinate all major components of the substations, including incoming primary equipment section, transformer and low-voltage section as well as circuit breakers, fusible switches, and metering components. Provide a single warranty covering all substation assemblies, transformers, and components.

1.3 RELATED WORK

A. For work to be included as part of this Section, to be furnished and installed by the Electrical Contractor, refer to the Related Work section of Specification Section 26 0510.

B. Carefully examine all of the Contract Documents, criteria sheets and all other Sections of the specifications for requirements which affect work under this Section, whether or not such work is specifically mentioned in this Section.

1.4 REFERENCES

A. The secondary unit substation shall be designed, assembled, and tested and installed in accordance with latest applicable standards of NEMA, IEEE and ANSI, applicable to its major sections as follows:

1. Medium Voltage Load Interrupter Switchgear

a. NEMA SG-5
b. NEMA SG-6
c. ANSI C37.20.3
d. ANSI C37.20.4
e. CSA A22.2 No. 31-M89
f. EEMAC G8-3.3

2. Transformer

   a. NEMA
   b. ANSI

3. Low Voltage Metal Enclosed Switchgear

   a. ANSI C37.20 (Switchgear assemblies)
   b. ANSI C37.13 (Low-voltage power circuit breakers)
   c. ANSI C37.17 (Trip devices)
   d. ANSI C37.90 (Relays)
   e. ANSI C39.1 (Meters)
   f. NEMA SG-5 (Switchgear assemblies)
   g. NEMA SG-3 (Low-voltage power circuit breakers)
   h. UL 1558

1.5 QUALITY ASSURANCE

A. The manufacturers listed within this specification have been preselected for use on this project. No submittal will be accepted from a manufacturer other than specified.

B. To ensure system compatibility, all medium voltage distribution equipment, secondary unit substations, and low voltage distribution equipment shall be the products of one manufacturer.

1.6 WARRANTY

A. Attention is directed to provisions of the General Requirements, Supplementary General Requirements and Section 26 0510 regarding guarantees and warranties for the work under this Contract.

1.7 QUALIFICATIONS

A. The manufacturer of the secondary unit substation shall be the manufacturer of the major components within the assembly.

B. For the equipment specified herein, the manufacturer shall be ISO 9000, 9001 or 9002 certified.

C. The manufacturer of this equipment shall have produced similar electrical equipment for a minimum period of five (5) years. When requested by the Engineer, an acceptable list of installations with similar equipment shall be provided demonstrating compliance with this requirement.

D. The secondary unit substation shall be suitable for and certified to meet all applicable seismic requirements of the latest accepted edition of the Connecticut State Building Code for seismic zone 2 application. Guidelines for the installation consistent with these requirements shall be provided by the switchgear manufacturer and be based upon testing of representative equipment. The test response spectrum shall be based upon a 5% minimum damping factor, with a peak acceleration and ZPA as required per the

Code. The tests shall fully envelope the response spectrum for all equipment natural frequencies up to at least 35 Hz.

1.8 DELIVERY, STORAGE AND HANDLING

A. Manufacturer's directions shall be followed completely in the delivery, storage, protection and installation. Promptly notify the Architect in writing of any conflict between any requirements of the Contract Documents and the manufacturer's directions. Obtain the Architect's written instructions before proceeding with the work. Should Electrical Contractor perform any work that does not comply with the manufacturer's directions or written instructions from the Architect, he shall bear all costs arising in correcting any deficiencies that should arise.

B. Equipment and materials shall be delivered to the site and stored in original sealed containers, suitably sheltered from the elements, but readily accessible for inspection by the Architect until installed. All items subject to moisture damage such as controls shall be stored in dry, heated spaces. Equipment such as switchgear with heater elements installed shall have the heater elements energized after the equipment is received by the Electrical Contractor.

C. The Electrical Contractor shall be responsible to fully inspect all shipments for damage and report damage to the manufacturer and the Architect.

D. Equipment shall be tightly covered and protected against dirt, water, and chemical or mechanical injury and theft. At the completion of the work, equipment and materials shall be cleaned and polished thoroughly and turned over to the Owner in a condition satisfactory to the Architect. Damage or defects that develop before acceptance of the work shall be made good at the Electrical Contractor's expense.

E. The Electrical Contractor shall make necessary field measurements to ascertain space requirements, for equipment and connections to be provided under his respective Trade and shall furnish and install such sizes and shapes of equipment to allow for the final installation to conform to the drawings and specifications.

F. The secondary unit substation shall be split into shipping groups for handling as directed by the Electrical Contractor or as the manufacturer’s limitations dictate. Shipping groups shall be designed to be shipped by truck, rail or ship. Shipping groups shall be bolted to skids. Accessories shall be packaged and shipped separately. Each switchgear shipping group shall be equipped with lifting eyes for handling solely by crane.

G. The secondary unit substation being stored prior to installation shall be stored so as to maintain the equipment in a clean and dry condition. If stored outdoors, indoor gear shall be covered and heated, and outdoor gear shall be heated.

1.9 ACCEPTABLE MANUFACTURERS

A. Cutler-Hammer

B. General Electric

C. Square D

1.10 SELECTIVE COORDINATION

A. The emergency distribution system, the elevator distribution system and the fire pump distribution system shall be selectively coordinated to meet the requirements of the National Electrical Code, Articles, 620.62, 700.27, and 701.27 and NFPA 20.

B. For system reliability, the entire normal distribution system shall be coordinated down to 0.10 seconds to the extent practicable.

C. The switchgear manufacturer shall be responsible to select appropriate overcurrent protective device, fuse and/or circuit breaker frame, sensor and trip sizes for all devices upstream of other devices for a completely coordinated system. Refer to specification 26 0570 for additional information.

1.11 WITHSTAND AND INTERRUPTING RATINGS OF ELECTRICAL COMPONENTS

A. Calculated available 3 phase and single phase to ground short circuit currents indicated on the drawings are provided for information only to assist in the selection of withstand and interrupting ratings and coordination of devices and equipment.

B. Prior to submission of shop drawings, the manufacturer shall perform short circuit calculations in accordance with specification section 26 0570 to determine actual available 3 phase and single line to ground short circuit current at each component in the system based on actual equipment, feeder lengths, impedances, etc. of the equipment proposed for this project. Failure to perform the study prior to submission of shop drawings shall not relieve the manufacturer from providing devices that meet the requirements of the final study report.

C. Each component shall be UL listed and labeled and shall be fully rated to withstand and interrupt calculated available 3 phase and single phase to ground short circuit current levels. Series ratings will not be acceptable.

1.12 SUBMITTALS

A. Prepare and submit shop drawings in accordance with the requirements hereinbefore specified, and with Section 01 3300 – Submittal Procedures in the manner described therein, modified as noted hereinafter.

B. All shop drawings shall have clearly marked the appropriate specification number of drawing designation, for identification of the submittal.

C. Disposition of shop drawings shall not relieve the Electrical Contractor from the responsibility for deviations from drawing or specifications, unless he has submitted in writing a letter itemizing or calling attention to such deviations at time of submission and secured written approval from the Engineer, nor shall such disposition of shop drawings relieve the Electrical Contractor from responsibility for errors in shop drawings or schedules.

D. Shop drawings shall include, but shall not be limited to, the following:

1. Primary equipment

2. Transformers

3. Low voltage switchgear

4. A ¼"=1'-0" scale floor plan of the main electric room housing the substation with dimensions, Code clearances, etc., shall be submitted with the equipment shop drawings. Acceptance of these shop drawings shall be obtained prior to installation of feeder conduits:

Notes:

Equipment shop drawings will not be reviewed without the room/equipment layouts.

The Architect/Engineer reserve the right to rearrange equipment in electrical equipment rooms or spaces once final equipment dimensional information is known and prior to installation of the equipment. Install equipment in the final location selected by the Architect/Engineer at no additional cost to the Owner.

E. The switchgear manufacturer shall submit the following information with each submittal:

1. Master drawing index.

2. Front view elevation.

3. Floor plan.

4. Top view.

5. Single line.

6. Control schematics and wiring diagrams.

7. Nameplate schedule.

8. Component list/bill of material.

9. Conduit entry/exit locations.

10. Assembly ratings including:

    a. Short circuit rating.
    b. Information regarding series short circuit ratings.
    c. Voltage.
    d. Continuous current.

e. Basic Impulse level for equipment over 600 volts.
f. KVA.

11. Major component ratings including:

a. Voltage.
b. Continuous current.
c. Interrupting ratings.

12. Cable terminal sizes.

13. Connection details between close-coupled assemblies.

14. Composite floor plan of close-coupled assemblies.

15. Impedance for transformers.

16. Manufacturer's catalog data sheets.

17. Test reports.

18. The following additional information shall be submitted to the Engineer:

a. Busway connection.
b. Key interlock scheme drawing and sequence of operations.

19. The following product information shall be submitted:

a. Descriptive bulletins.
b. Product sheets.

1.13 CLOSEOUT SUBMITTALS AND O & M MANUALS

A. The following information shall be submitted for record purposes, in a binder, prior to final payment:

1. Final as-built drawings and information for items listed above.

2. Operation and maintenance manuals with the following information:

a. Instruction books and/or instruction leaflets
b. Recommended renewal parts

3. Wiring diagrams.

4. Certified production test reports.

5. Installation information.

6. Seismic certification and equipment anchorage details.

PART 2 - PRODUCTS

2.1 MEDIUM VOLTAGE LOAD INTERRUPTER LOOP SWITCHGEAR

A. Ratings

1. Each switchgear assembly ratings shall be as follows:

a.	Nominal System Voltage:	15 kV three-phase, four wire
b.	System Grounding:	solid
c.	Maximum Design Voltage:	15 kV
d.	Basic Impulse Level:	95 kV
e.	Bus Continuous Current:	600 Amperes
f.	Momentary Current:	61 kA Asym.
g.	Two Second Current:	38 kA Sym.
h.	Switch Fault Close	61 kA Asym.
i.	Switch Continuous/Load Break	600 Amperes

B. Construction

1. The metal enclosed load interrupter switchgear shall consist of dead front, completely metal enclosed vertical sections containing load interrupter switches and fuses (where shown) of the number, rating and type noted on the drawings or specified herein.

2. The following features shall be supplied on every vertical section containing a three pole, two-position open-closed switch:

a. A high impact viewing window that permits full view of the position of all three switch blades through the closed door.

b. The door shall be interlocked with the switch so that:

1) The switch must be opened before the door can be opened.

2) The door must be closed before the switch can be closed.

c. A grounded metal barrier in front of every switch to prevent inadvertent contact with any live part, yet allow for a full-view inspection on the switch blade position.

d. Provision for padlocking the switch in the open or closed position.

e. Permanent "Open-Closed" switch position indicators.

f. Provide a full height, glass polyester, vertical barrier, top to bottom, separating cable compartment from switch and fuse compartment.

g. Where bus or cabling pass between adjacent sections of the 15 kV switchgear or between 15 kV switchgear and adjacent compartments, porcelain, feed-thru bushings shall be provided.

3. Vertical section construction shall be of the universal frame type using die formed and bolted parts. All enclosing covers and doors shall be fabricated from not less than 11 gauge steel. To facilitate installation and maintenance of cables and bus in each vertical section, a removable top cover and a removable, padlockable rear cover shall be provided.

4. Each vertical section containing a switch shall have a single, full length, flanged front door and shall be equipped with two rotary latch type padlockable handles. Provision shall be made for operating the switch and storing the removable handle without opening the full length door.

5. Each load interrupter switch shall have the following features:

a. Three pole gang operated.

b. Manual quick-make quick-break over toggle type mechanism utilizing a heavy duty coil spring to provide opening and closing energy.

c. Medium voltage switches that utilize a chain drive assembly to connect the stored energy mechanism to the operating handle shall provide sufficient vertical and horizontal phase barriers between the operating area of the chain and the live parts to prevent a broken chain from coming in contact with the live parts of the switch. In addition, each medium voltage switch shall come complete with a spare chain located within each medium voltage switch.

d. The speed of opening and closing the switch shall be independent of the operator, and it shall be impossible to tease the switch into any intermediate position under normal operation.

e. Separate main and break contacts to provide maximum endurance for fault close and load interrupting duty.

f. Insulating barriers between each phase and between the outer phases and the enclosure.

C. Bus

1. All phase bus conductors shall be silver plated copper and be mounted on NEMA rated porcelain or epoxy insulators.

2. Bus bars shall be arranged “A”, “B”, “C”, from front-to-back and/or top-to-bottom and/or left-to-right as viewed from the front of the equipment.

3. Ground bus shall be silver plated copper and be directly fastened to a bare metal surface of each vertical section, and be of a size sufficient to carry the rated

2 second current of the switchgear assembly. The ground bus shall be extended to within 18” of the incoming conductor conduit entrance.

D. Fuses

1. Fault protection shall be furnished by fuses rated as shown in the contract documents. The high-voltage fuses shall be general purpose type current limiting fuses. The fuses shall be designed to operate with the load interrupter switchgear and shall be tested and rated in accordance with the latest ANSI standards. Provide three (3) spare fuses for each fused switch.

2. High-Voltage fuses shall be stored in a non-condensing environment between 10 degrees C and 40 degrees C.

3. Ratings shall be as follows:

a.	Fuse ANSI Designation:	E
b.	Fuse Type:	Current Limiting
c.	Nominal System Voltage:	15 kV
d.	Maximum Design Voltage:	15 kV
e.	Current Rating:	125 Amperes
f.	Minimum Interrupting Rating:	85 kA RMS Sym

4. The following features shall be included on every Current Limiting fuse:

   a. High purity, graded silica-sand filler with pure silver (0.999 fine) elements encased in a glass-epoxy casing.

5. Furnish and install a wall mounted, heavy duty, steel spare fuse cabinet, size as required, with the capacity for 3 spare fuses for each fused switch in the room.

E. Special Switchgear Configurations

1. Duplex Switchgear Assembly

   a. Furnish a duplex switchgear assembly configuration consisting of two load interrupter switches with common load side bus to feed one load circuit, which shall be fused. Key interlocks shall be supplied to prevent paralleling the incoming sources, and to prevent opening the front door of each vertical section containing one of the two switches unless both switches are locked open.

F. Accessories

1. The secondary unit substation manufacturer shall furnish accessories for the primary medium voltage load interrupter switchgear for test, inspection, maintenance and operation, including:

2. 15 kV intermediate class surge arrestors shall be provided connected at the incoming terminations and securely grounded to the metal structure.

3. Provide personnel protective grounding apparatus for incoming and outgoing medium voltage conductors at the point of cable termination within the cable compartment. Ground studs and covers shall be AB Chance #C-600-2102 with #C-406-0416 cover or Salisbury #21191 with #21236 cover.

2.2 CAST COIL TRANSFORMERS

A. Ratings

1. The ratings of each transformer shall be as follows:

a.	kVA Rating:	2000/2666 AA/FA
b.	Impedance:	5.75% +/- 7 1/2%
c.	HV:	13.2 kV Delta
d.	HV BIL:	60 kV
e.	HV Taps:	+/-2 - 2 1/2% full capacity
f.	LV:	480/277 Volts, 3 Phase, 4 Wire, Wye
g.	LV BIL:	10 kV

B. Construction

1. Forced air (FA) units for 300 kVA and above shall contain all necessary components and wiring, including fans, for automatically increasing the kVA rating by 33%. The (FA) package shall include an electronic temperature monitor and fan control unit with the following features:

a. Digital readout

b. Indicating lights

1) green - power on
2) yellow - fan on
3) red - high temperature

c. audible high temperature alarm with alarm silence push button

d. max. temperature memory with read and reset switch

e. auto/manual fan control switch

f. system test switch

g. temperature sensing in all three low voltage coils.

h. Auxiliary alarm contact and means for remote control and temperature monitoring shall be provided.

i. Control power shall be provided from a control power transformer in the secondary equipment.

2. The electrical insulation system shall utilize Class F material in a fully rated 185 degree C system. Transformer design temperature rise shall be based on a 30 degrees C average ambient over a 24 hour period with a maximum of 40 degrees C. Solid insulation in the transformer shall consist of inorganic materials such as porcelain, glass fiber, silica, electrical grade epoxy and Nomex. All insulating materials must be rated for continuous 185 degree C duty.

3. For enhanced environmental protection and improved withstandability to thermal shock and short circuit stresses, the primary and secondary coil assemblies shall be of cast coil design. Each cast coil shall be cast under vacuum to assure complete, void free epoxy resin impregnation throughout the entire insulation system.

4. The average temperature rise of the transformer windings shall not exceed 80 degrees C when the transformer is operated at full nameplate rating. The transformer(s) shall be capable of carrying 100% of nameplate kVA rating in a 40 degrees C max. 30 degrees C average ambient as defined by ANSI C57.12.00.

5. The transformer shall be supplied with a Category B enclosure per ANSI C57.12.55. The enclosure shall be a knockdown case design, for ease in fitting through limited openings, and shall be of heavy gauge sheet steel construction, equipped with removable panels for access to the core and coils. Front and rear panels shall incorporate ventilating grills.

6. The transformer shall be designed to meet the sound level standards for dry transformers as defined in NEMA TR1.

7. The transformer shall have copper coils.

8. Transformers shall meet or exceed Class 1 efficiency levels per NEMA TP-1-2002, or the latest adopted edition.

B. Terminal Compartments

1. The transformer unit supplied shall include a HV flange and a LV flange. Connections between the primary device and transformer shall be copper bus, and between the transformer and secondary shall be flexible copper bus braid.

C. Accessories

1. The secondary unit substation manufacturer shall furnish accessories for the cast coil transformer for test, inspection, maintenance and operation, including:

   a. Diagram instruction plate.
   b. Provisions for lifting and jacking.
   c. Removable case panel for access to high voltage strap type connector taps for de-energized tap changing.
   d. Two ground pads.

2.3 LOW-VOLTAGE DRAW-OUT METAL ENCLOSED SWITCHGEAR

A. Ratings

1. Voltage rating shall be 480/277 volts, 3 phase, 4 wire. The entire assembly shall be suitable for 600 volts maximum AC Service.

2. The assembly shall be rated to withstand mechanical forces exerted during short circuit conditions when connected directly to a power source having available fault current of 65,000 amperes symmetrical at rated voltage.

3. The bus system shall have a minimum ANSI 4 cycle short circuit withstand rating of 100,000 amperes symmetrical.

4. All circuit breakers shall have a minimum symmetrical interrupting capacity of 65,000 amperes. To assure a fully selective system, all circuit breakers shall have 30 cycle short time withstand ratings equal to their symmetrical interrupting ratings, regardless of whether equipped with instantaneous trip protection or not.

5. Where circuit breakers are equipped with current limiters, the combination shall have short time ratings in accordance with the characteristics of the limiter selected.

6. All ratings shall be tested to the requirements of ANSI C37.20.1, C37.50 and C37.51 and UL witnessed and approved.

B. Construction

1. The switchgear shall consist of the required number of vertical sections bolted together to form a rigid assembly. The sides and rear shall be covered with removable bolt-on covers. All edges of front covers or hinged front panels shall be formed. Provide ventilators located on the top of the switchgear over the breaker and bus compartments to ensure adequate ventilation within the enclosure. Hinged rear doors, complete with provisions for padlocking, shall be provided.

2. The switchgear shall be suitable for use as service entrance equipment and be labeled in accordance with UL requirements.

3. The assembly shall be provided with adequate lifting means and shall be capable of being moved into installation position. Provisions shall be made for jacking of shipping groups, for removal of skids or insertion of equipment rollers. Base of assembly shall be suitable for rolling directly on pipes without skids.

4. The switchgear shall be low voltage metal enclosed switchgear, utilizing air power circuit breakers as herein specified.

5. Each vertical steel unit forming part of the switchgear line-up shall be a self-contained housing having one or more individual breaker or instrument compartments, a centralized bus compartment and a rear cabling compartment. Each individual circuit breaker compartment, or cell, shall be segregated from adjacent compartments and sections, including the bus compartment, by means of

barriers. It shall be equipped with draw-out rails and primary and secondary disconnecting contacts. Removable hinge pins shall be provided on the breaker compartment door hinges. Current transformers for feeder instrumentation, shall be located within the appropriate breaker cells.

6. Provide a separate, barriered section for the fire pump tap. No other components/equipment shall be located within this section.

7. The stationary part of the primary disconnecting devices for each power circuit breaker shall consist of a set of contacts extending to the rear through a glass polyester insulating support barrier; corresponding moving finger contacts suitably spaced shall be furnished on the power circuit breaker studs which engage in only the connected position. The assembly shall provide multiple silver-to-silver full floating high pressure point contacts with uniform pressure on each finger maintained by springs. Each circuit shall include the necessary three phase bus connections between the section bus and the breaker line side studs. Load studs shall be equipped with insulated copper load extension busses terminating in solderless type terminals in the rear cable compartment of each structure. Bus extensions shall be silver or tin-plated where outgoing terminals are attached.

8. The secondary disconnecting devices shall consist of floating fingers mounted on the removable unit and engaging flat contact segments at the rear of the compartment. The secondary disconnecting devices shall be silver-plated and sliding contact engagement shall be maintained in the "connected" and "test" positions.

9. The removable power circuit breaker element shall be equipped with disconnecting contacts, wheels and interlocks for draw-out application. It shall have four positions, "connected", "test", "disconnected" and "removed" all of which permit closing the compartment door. The breaker draw-out element shall contain a worm gear levering "in" and "out" mechanism with removable lever crank. Mechanical interlocking shall be provided so that the breaker is in the tripped position before levering "in" or "out" of the cell. The breaker shall include a provision for padlocking open to prevent manual or electric closing. The padlocking shall also secure the breaker in the connected, test, or disconnected position by preventing levering.

10. Where required to prevent flashover from the arc chutes to ground, an insulating flash shield shall be mounted above each circuit breaker.

11. Provide, in the cell when the circuit breaker is withdrawn, a safety shutter which automatically covers the line and load stabs and protect against accidental contact.

12. Provide a rear compartment barrier between the cable compartment and the main bus to protect against inadvertent contact with main or vertical bus bars.

13. Provide a metal barrier full height and depth between adjacent vertical structures in the cable compartment.

14. Provide a glass polyester full height and depth barrier between adjacent vertical structures in the bus compartment with appropriate slots for main bus.

C. Bus

1. All bus bars shall be silver or tin plated copper. Main horizontal bus bars shall be mounted with all three phases arranged in the same vertical plane. Bus sizing shall be based on ANSI standard temperature rise criteria of 65 degrees C over a 40 degrees C ambient (outside the enclosure).

2. In addition to full UL air clearances, the bus shall be insulated with a minimum of 5 mil thickness of epoxy resin coating. Removable non-PVC boots shall be provided to give access to the cross bus joints for inspection and maintenance.

3. Bus bars shall be arranged “A”, “B”, “C”, from front-to-back and/or top-to-bottom and/or left-to-right as viewed from the front of the equipment.

4. Provide a full capacity neutral bus.

5. A copper ground bus shall be furnished firmly secured to each vertical section structure and shall extend the entire length of the switchgear. The ground bus short time withstand rating shall meet that of the largest circuit breaker within the assembly.

6. All hardware used on conductors shall be high-tensile strength and zinc plated. All bus joints shall be provided with bellville type washers.

D. Circuit Breakers

1. All protective devices shall be draw-out low-voltage power circuit breakers. Frame ratings shall be 800, 1600, 2000, 3200, 4000 or 5000 amperes. All breakers shall be UL listed for application in their intended enclosures for 100% of their continuous ampere rating.

2. Breakers shall be manually operated (MO).

3. Power circuit breakers shall have a minimum symmetrical interrupting capacity as indicated above.

4. In order to achieve required interrupting capacities, main tie and feeder power circuit breakers may require current limiting fuses. If required, limiters shall be integrally mounted or shall be mounted on a separate draw-out fuse truck. Current limiters shall be coordinated with the breaker trip device, so as to avoid unnecessary blowing of the current limiters. Breakers shall include an anti-single-phase device that will trip the breaker in the event of a blown limiter, indicate from the front of the breaker which limiter is blown, and prevent the breaker from being re-closed on a single-phase condition due to missing or blown limiters.

5. Current limiters which are integrally mounted with breaker shall be inaccessible until the breaker is completely withdrawn from its compartment assuring complete isolation. Current limiters mounted on a separate fuse truck shall be key interlocked with the respective breaker to prevent withdrawing or insertion unless the breaker is locked open.

E. Trip Units

1. Each draw-out low voltage power circuit breaker shall be equipped with a solid-state tripping system consisting of three current sensors, microprocessor-based trip device and flux-transfer shunt trip. Current sensors shall provide operation and signal function. The trip unit shall use microprocessor-based technology to provide the basic adjustable time-current protection functions. True RMS sensing circuit protection shall be achieved by analyzing the secondary current signals received from the circuit breaker current sensors and initiating trip signals to the circuit breaker trip actuators when predetermined trip levels and time delay settings are reached. Interchangeable rating plugs shall establish the continuous trip ratings of each circuit breaker.

2. The trip unit shall have an LCD or LED display to indicate mode of trip following an automatic trip operation. The indication of the mode of trip shall be retained after an automatic trip. A trip reset button shall be provided to turn off the display indication after an automatic trip.

3. Complete system selective coordination shall be provided by the addition of the following individually adjustable time/current curve shaping solid-state elements:

   a. All breakers shall have adjustments for long delay pick-up and time.

   b. Main, Tie and Feeder breakers shall have individual adjustments for short delay pick-up and time, and include I^2t settings.

   c. Main and Tie breakers shall have no instantaneous trip function.

   d. Tie and Feeder breakers shall have an adjustable instantaneous pick-up.

   e. Main, Tie and Feeder breakers shall have individually adjustable ground fault current pick-up and time, and include I^2t settings.

4. The trip unit shall contain an integral test panel with a test selector switch and a test pushbutton or a portable full function test set. The test kit shall enable the user to select the values of test currents within a range of available settings. The basic protection functions shall not be affected during test operations. The breaker may be tested in the Trip or No trip test mode.

   a. The test kit, when connected to a 120V, 50/60 Hz source, shall provide power for testing the trip unit while the breaker is out of the cell or in the disconnect or withdrawn position.

5. Trip unit shall have thermal memory for enhanced circuit protection.

6. The alpha-numeric display shall be provided to indicate the following data:

   a. Cause of trip.
   b. Instantaneous current on all three phases.

7. The trip unit shall include a power/relay module which shall supply control power to the readout display. Following an automatic trip operation of the circuit breaker, it shall maintain the cause of trip history and the trip target as long as its internal power supply is available.

8. Metering display accuracy of the complete system including current sensors, auxiliary C.T.'s, and the trip unit shall be +/- 2% of full scale for current values.

9. The trip unit shall include metering capabilities as follows:

   a. Volts (per phase)
   b. Amperes (per phase)
   c. Kilowatt Hours (kWH)
   d. Kilowatt demand (kW)
   e. Instantaneous demand (kW)
   f. Kilovolt-amperes demand (kVA)
   g. Instantaneous demand (kVA)
   h. Power factor
   i. Harmonic distortion (THD Voltage and current)
   j. Waveform capture

10. The energy-monitoring parameter values (peak demand, present demand, and energy consumption) shall be indicated in the trip unit alpha-numeric display panel.

11. Metering display accuracy of the complete system of full scale shall be +/- 3% for power values, +/- 4% of full scale for energy values.

12. The trip unit shall be equipped to permit communication via a network twisted pair for remote monitoring and control.

13. Furnish and install all requires appurtenances, as required, within the switchgear for future trip unit communications to a central software package.

F. Energy Reducing Maintenance Switch

1. Circuit breakers specified herein and/or on the drawings with no instantaneous trip function or instantaneous trip set to a value of "0" shall contain an energy reducing maintenance switch. Maintenance switch shall include local status audible (with silence switch) and visual indication as well as auxiliary contacts for remote status monitoring.

G. Accessories

1. The secondary unit substation manufacturer shall furnish accessories for the low voltage metal enclosed switchgear for test, inspection, maintenance and operation, including:

2. A traveling type circuit breaker lifter, rail-mounted on top of switchgear.

2.4 WIRING/TERMINATIONS

A. On the medium voltage load interrupter switchgear, one two hole NEMA pad per phase shall be provided for attaching Electrical Contractor supplied compression, crimp type cable terminal suitable for copper cable lugs for the number and sizes of conductors as indicated on the drawings. Sufficient space shall be supplied for Electrical Contractor supplied electrical stress relief termination devices.

B. On the low voltage equipment, NEMA 2-hole compression, crimp type lugs shall be provided for all line and load terminations suitable for copper or aluminum cable rated for 75 degrees C of the size indicated on the drawings. A termination system shall be provided such that no additional cable bracing, tying or lashing is required to maintain the short circuit withstand ratings of the assembly through 65kA.

C. Lugs shall be provided in the incoming line section for connection of the main grounding conductor. Additional lugs for connection of other grounding conductors shall be provided.

D. All control wire shall be type SIS. Wire bundles shall be secured with nylon ties and anchored to the assembly with the use of prepunched wire lances. All current transformer secondary leads shall first be connected to conveniently accessible short circuit terminal blocks before connecting to any other device. Four shorting screws with provisions for storage shall be provided. All groups of control wires leaving the switchgear shall be provided with terminal blocks with suitable numbering strips. Insulated locking spade terminals shall be provided for all control connections, except where saddle type terminals are provided integral to a device. Provide wire markers at each end of all control wiring. Plug in terminal blocks shall be provided for all shipping split wires. Terminal connections to remote devices or sources shall be front accessible via removable trays above each circuit breakers. Control fuses for each electrically operated circuit breakers shall also be located in these trays.

E. Small wiring, necessary fuse blocks and terminal blocks within each vertical section shall be furnished as required. Control components mounted within the assembly, such as fuse blocks, relays, pushbuttons, switches, etc., shall be suitably marked for identification corresponding to appropriate designations on manufacturer's wiring diagrams.

2.5 KEY INTERLOCKS

A. Key interlocks shall be provided between the secondary main breaker and between the two (2) secondary main breakers in the secondary switchgear and the tie breaker.

2.6 CUSTOMER METERING

A. Provide customer metering devices as specified herein. Provide a separate customer metering compartment with front hinged door. Include associated instrument transformers.

B. Current transformers shall be wired to shorting type terminal blocks.

C. Provide potential transformers including primary and secondary fuses with disconnecting means or fused potential taps as the potential source for metering as required.

D. Microprocessor-based metering system.

1. Provide a full function electronic meter on all secondary low voltage main devices. The meter shall have the features and functions specified below. The meter shall be UL recognized, CSA certified and also meet ANSI Standard C37.90.

2. The meter shall provide direct reading metered or calculated values of the items listed below and shall auto range between Units, Kilo-units, and Mega-units for all metered values. Accuracy indicated below to be of read or calculated values.

a. AC Current (Amperes) in A, B, and C phase, 3 Phase Average and Neutral (N). Accuracy +/- 0.2% (provide phase and neutral current transformer).

b. AC Voltage (Volts) for A-B, B-C, and C-A, Phase Average, A-N, B-N, and C-N and Average Phase to N. Accuracy +/-0.2%.

c. Real Power (WATTS), Reactive Power (VARS), Apparent Power (VA), for each phase and system (system shall apply only for 3 wire applications). Accuracy +/- 0.4%. Forward/Reverse indication shall be provided.

d. Real Energy (WHR), Reactive Energy (VARHR), Apparent Energy (VAHR) for each phase and system (system shall apply only for 3 wire applications). Accuracy +/- 0.4%. Forward/Reverse indication shall be provided.

e. Frequency (HERTZ) Accuracy +/- 0.04%.

f. Demand values for System Current (AMPERES), System Real Power (WATTS), System Reactive Power (VARS), and System Apparent Power (VA).

g. Power Factor both Displacement only 60 cycle fundamental WATTS to VA and Apparent total WATTS to total VARS including harmonics for A, B, and C phase and system. Accuracy +/- 0.4%.

3. Make provisions for an addressable communication card capable of transmitting all data, remotely controlling and programming the meter over a compatible local area network to a central personal computer for storage, analysis, display and

printout. The network shall also be capable of transmitting data in RS232c or RS485 format.

4. Provide current transformers as required for each phase and neutral circuit with ratings sized for incoming service or associated feeder. Provide potential transformers as required for proper operation of the meter.

5. The meter control power shall be capable of being supplied from the monitored incoming AC line without the need for a separate AC control circuit unless a separate 120 or 240 volt source is indicated on the drawings.

2.7 ENCLOSURES

A. The substation described in these specifications shall be indoor construction, with devices arranged as shown on contract drawings.

B. The switchgear section of the substation shall have a minimum depth of 72 inches to allow sufficient space on the top and bottom of the gear for conduit entrance.

2.8 NAMEPLATES

A. Engraved nameplates, mounted on the face of the assembly, shall be furnished for all main and feeder circuits. Nameplates shall be laminated plastic, black characters on white background, and secured with screws. Characters shall be 3/16 inch high, minimum. Nameplates shall give item designation and circuit number as well as frame ampere size and appropriate trip rating.

B. Furnish master nameplate giving switchgear designation, voltage ampere rating, short circuit rating, manufacturer's name, general order number and item number.

C. Control components mounted within the assembly, such as fuse blocks, relays, pushbuttons, switches, etc., shall be suitably marked for identification corresponding to appropriate designations on manufacturer's drawings and/or wiring diagrams.

2.9 FINISH

A. Prior to assembly, all enclosing steel shall be thoroughly cleaned and phosphatized. A powder coating shall be applied electrostatically, then fused on by baking in an oven. The coating is to have an average thickness of not less than 3.0 mils. The finish shall have the following properties:

1.	Impact resistance (ASTM D-2794):	60 Direct/60 Indirect
2.	Pencil Hardness (ASTM D-3363):	H
3.	Flexibility (ASTM D-522):	Pass 1/8 inch mandrel
4.	Salt Spray(ASTM B117-85 [20]):	600 hours
5.	Color:	ANSI 61 Gray

PART 3 - EXECUTION

3.1 COOPERATION AND WORK PROGRESS

A. The Electrical work shall be carried on under the usual construction conditions, in conjunction with all other work at the site. The Electrical Contractor shall cooperate with the Architect, Construction Manager, all other Subcontractors and equipment suppliers working at the site. The Electrical Contractor shall coordinate the work and proceed in a manner so as not to delay the progress of the project.

B. The Electrical Contractor shall coordinate his work with the progress of the building and other Trades so that he will complete his work as soon as conditions permit and such that interruptions of the building functions will be at a minimum. Any overtime hours worked or additional costs incurred due to lack of or improper coordination with other Trades or the Owner by the Electrical Contractor, shall be assumed by him without any additional cost to the Owner.

C. The Electrical Contractor shall furnish information on all equipment that is furnished under this Section but installed under another Section to the installing Subcontractor as specified herein.

D. The Electrical Contractor shall provide all materials, equipment and workmanship to provide for adequate protection of all electrical equipment during the course of construction of the project. This shall also include protection from moisture and all foreign matter. The Electrical Contractor shall also be responsible for damage which he causes to the work of other Trades, and he shall remedy such injury at his own expense.

E. Waste materials shall be removed promptly from the premises. All material and equipment stored on the premises shall be kept in a neat and orderly fashion. Material or equipment shall not be stored where exposed to the weather. The Electrical Contractor shall be responsible for the security, safekeeping and damages, including acts of vandalism, of all material and equipment stored at the job site.

F. The Electrical Contractor shall be responsible for unloading all electrical equipment and materials delivered to the site. This shall also include all large and heavy items or equipment which require hoisting. Consult with the Construction Manager for hoisting/crane requirements. During construction of the building, the Electrical Contractor shall provide additional protection against moisture, dust accumulation and physical damage of the main service and distribution equipment. This shall include furnishing and installing temporary heaters within these units, as approved, to evaporate excessive moisture and ventilate it from the room, as may be required.

G. It shall be the responsibility of the Electrical Contractor to coordinate the delivery of the electrical equipment to the project prior to the time installation of equipment will be required; but he shall also make sure such equipment is not delivered too far in advance of such required installation, to ensure that possible damage and deterioration of such equipment will not occur. Such equipment stored for an excessively long period of time (as determined in the opinion of the Architect) on the project site prior to installation may be subject to rejection by the Architect.

H. The Electrical Contractor shall erect and maintain, at all times, necessary safeguards for the protection of life and property of the Owner, Workmen, Staff and the Public.

I. Prior to installation, the Electrical Contractor has the responsibility to coordinate the exact mounting arrangement and location of electrical equipment to allow proper space requirements as indicated in the NEC. Particular attention shall be given in the field to group installations. If it is questionable that sufficient space, conflict with the work of other Subcontractors, architectural or structural obstructions will result in an arrangement which will prevent proper access, operation or maintenance of the indicated equipment, the Electrical Contractor shall immediately notify the Contractor and not proceed with this part of the Contract work until definite instructions have been given to him by the Architect.

J. The Electrical Contractor shall not allow any equipment or piping foreign to the electrical installation to be installed or pass through any room in which electrical systems or equipment are located, such as electric rooms, electric closets, telephone or data closets. The Electrical Contractor shall notify the Contractor of such violations and request immediate removal.

3.2 INSTALLATION

A. General

1. Unless specifically noted or indicated otherwise, all equipment and material specified in Part 2 of this specification or indicated on the drawings shall be installed under this Contract whether or not specifically itemized herein. This Section covers particular installation methods and requirements peculiar to certain items and classes or material and equipment.

2. The Electrical Contractor shall obtain detailed information from manufacturers of equipment provided under Part 2 of this specification as to proper methods of installation.

3. The Electrical Contractor shall obtain final roughing dimensions and other information as needed for complete installation of items furnished under other Sections or furnished by the Owner.

4. The Electrical Contractor shall keep fully informed of size, shape and position of openings required for material and equipment provided under this and other Sections. Ensure that openings required for work of this Section are coordinated with work of other Sections. Provide cutting and patching as necessary.

5. The Electrical Contractor shall coordinate the electric service installation with the Owner.

6. All miscellaneous hardware and support accessories, including support rods, nuts, bolts, screws and other such items, shall be of a galvanized or cadmium plated finish or of another approved rust-inhibiting coating.

7. Throughout this Section where reference is made to steel channel supports, it shall be understood to mean that the minimum size shall be 1 5/8" mild strip steel with minimum wall thickness of 0.105", similar to Unistrut P1000 or equal products manufactured by Kindorf or Husky Products Co.

B. Concrete Housekeeping Pads

1. Concrete pads shall be installed for all freestanding substations.

2. The Construction Manager shall provide the concrete work. Electrical Contractor shall supervise and coordinate concrete work to ensure that proper grounding cable, rods, conduit, etc., are located as detailed and as required. The Electrical Contractor shall also ensure that the concrete is level to within manufacturers published tolerances.

3. All concrete housekeeping pads shall extend a minimum of 6" on each side from the equipment mounted on it. Mounting height of each overcurrent/disconnect device in the above equipment shall not exceed 6'-6" above finished floor. If overcurrent devices exceed 6’-6” above finished floor as a result of the housekeeping pad, the pad shall extend in front of the gear a minimum of 4’-0”.

C. Electrical Distribution Equipment

1. The Electrical Contractor shall install the secondary unit substation per the manufacturers recommendations and the Contract Drawings.

2. The installation of all equipment, including working space requirements, shall conform to all NEC and local codes.

3. All necessary hardware to secure the assembly in place shall be provided by the Electrical Contractor.

4. <u>The Electrical Contractor shall ensure that no piping, ductwork or other equipment foreign to the electrical trade passes through the area extending from the floor to the structural ceiling with the width and depth equal to that of the electrical distribution equipment plus 6" on either side of panel</u>.

5. Floor mounted assemblies shall be installed on concrete housekeeping pads and shall be provided with adequate lifting means. Floor mounted assemblies shall be capable of being moved into installation position and bolted directly to the floor without the use of floor sills. The Electrical Contractor shall ensure the floor is level to 1/8 inch per 3-foot distance in any direction.

6. All electrical equipment shall be installed such that the handle of the highest circuit breaker does not exceed 6’-6” above finished floor.

7. The location of all electrical distribution equipment installed in mechanical or plumbing equipment rooms shall be coordinated with the respective Subcontractor.

8. The equipment shall be installed and checked in accordance with the manufacturer’s recommendations prior to first energization. This shall include but not limited to:

   a. Checking to ensure that the pad location is level to within .125 inches.

b. Checking to ensure that all bus bars are torqued to the manufacturer's recommendations.

c. Assemble all shipping sections, remove all shipping braces and connect all shipping split mechanical and electrical connections.

d. Secure assemblies to foundation or floor channels.

e. Measure and record megger readings phase-to-phase, phase-to-ground, and neutral-to-ground (four-wire systems only).

f. Inspect and install all circuit breakers, components, etc. in their proper compartments.

9. Identification shall be provided for all electrical distribution equipment. The electrical system identification shall clearly describe the equipment connected. Method of identification shall be by laminated nameplate made of bakelite or similar material with engraved letters at least 1/4" high and securely attached to the equipment with galvanized screws. Adhesives or cements shall not be used. A list of nameplates shall be submitted to the Architect for approval prior to fabrication.

10. Control wiring shall be provided as required. Interface all local and remote control wiring and operational systems for each load.

D. Substations

1. The substation, including the transformer, shall be installed on vibration isolators meeting seismic requirements.

2. On grade substations

a. Install the transformer with the manufacturer's standard vibration isolator elastomer pad with minimum thickness of 0.5 inches.

b. Install the entire substation cabinet on ribbed or waffle pattern elastomer vibration isolator pads, minimum 0.5 inches thick.

c. Select the areas and locations of pads such that the bearing pressure is within manufacturer's recommended range. Isolate hold-down bolts using elastomer bushings and washers, minimum 0.25 inches thick.

3. Above grade substations

a. Install the transformer and entire substation on elastomer-in-shear mounts made of material suited for the service.

b. Mounts shall be selected for minimum deflections as follows:

1) Transformer: 0.2 inch

2) Substation Cabinet: 0.1 inch

c. Provide steel rails under the transformer to transfer the load to the isolator mounts and provide a stable installation.

3.3 REQUIREMENTS FOR EMERGENCY SYSTEMS WIRING

A. All feeder and branch circuit wiring for each system of the emergency and legally required systems shall be kept entirely independent of all other wiring, devices and equipment, and shall not enter the same raceways, boxes or cabinets with each other or other wiring, except as specifically allowed by the Code.

B. Where multiple transfer switches are provided for the same branch of emergency power, all wiring between the multiple systems shall be kept entirely independent of each other and all other branches of emergency power, except as specifically allowed by the Code

3.4 MATERIALS AND WORKMANSHIP

A. All materials and equipment shall be new and unused and shall meet requirements of the latest Standards of NEMA, UL, IPCEA, ANSI and IEEE. Equipment shall have components required or recommended by OSHA, applicable NFPA documents and shall be UL listed and labeled.

B. Despite references in the specifications or on the drawings to materials or pieces of equipment by name, make or catalog number, such references shall be interpreted as establishing standards of quality for materials and performance.

C. Finish of materials, components and equipment shall not be less than Industry good practice. When material or equipment is visible or subject to corrosive or atmospheric conditions, the finish shall be as approved by the Architect.

D. Provide proper access to material or equipment that requires inspection, replacement, repair or service. If proper access cannot be provided, confer with the Architect as to the best method of approach to minimize effects of reduced access.

E. All work shall be installed in a neat and workmanlike manner and shall be done in accordance with all Local and State Codes.

F. The Owner will not be responsible for material, equipment or the installation of same before testing and acceptance.

3.5 FACTORY TESTING

A. The following standard factory tests shall be performed on the primary equipment provided under this section. All tests shall be in accordance with the latest version of ANSI and NEMA standards.

1. Medium voltage load interrupter switchgear

a. Standard factory tests shall be performed on the equipment under this section. All tests shall be in accordance with the latest version of ANSI and NEMA standards.

B. Transformers

1. The following factory tests shall be made on all transformers. All tests shall be in accordance with the latest revision of ANSI and NEMA standards:

a. Resistance measurements of all windings on the rated voltage connection of each unit and at the tap extremes of one unit only of a given rating on this project.

b. Ratio tests on the rated voltage connection and on all tap connections.

c. Polarity and phase-relation tests on the rated voltage connections.

d. No-load loss at rated voltage on the rated voltage connection.

e. Exciting current at rated voltage on the rated voltage connection.

f. Impedance and load loss at rated current on the rated voltage connection of each unit and on the tap extremes of one unit only of a given rating on this project.

g. Applied potential test.

h. Induced potential tests.

2. The following special factory tests shall be performed on the equipment provided under this section. All tests shall be in accordance with the latest revision of ANSI and NEMA standards.

C. Low Voltage Metal Enclosed Switchgear

1. The switchgear shall be completely assembled, wired, adjusted and tested at the factory. After assembly, the complete switchgear shall be tested to assure the accuracy of the wiring and the functioning of all equipment. The main bus system shall be given a dielectric test of 2200 volts for one minute between live parts and ground and between opposite polarities.

2. The wiring and control circuits shall be given a dielectric test of 1500 volts for one minute or 1800 volts for one second between live parts and ground, in accordance with ANSI C37.20.1.

D. Factory tests as outlined above shall be witnessed by the Owner's representative.

1. The manufacturer shall notify the Owner two (2) weeks prior to the date the tests are to be performed.

E. The manufacturer shall provide three (3) certified copies of factory test reports.

3.6 FIELD SETTINGS

A. The Electrical Contractor shall perform field adjustments of the circuit breakers as required to place the equipment in final operating condition. The settings shall be in accordance with the approved protective device coordination study or as directed by the Engineer.

B. For transformers, adjust taps to deliver appropriate voltage and measure primary and secondary voltage to confirm proper setting.

3.7 FIELD QUALITY CONTROL

A. Provide the services of a qualified factory-trained manufacturer's representative to assist the Electrical Contractor in installation and start-up of the equipment specified under this section for a period of 2 working days. The manufacturer's representative shall provide technical direction and assistance to the Electrical Contractor in general assembly of the equipment, connections and adjustments, and testing of the assembly and components contained therein.

B. The Electrical Contractor shall provide three (3) copies of the manufacturer's field start-up report before final payment is made.

3.8 MANUFACTURER'S CERTIFICATION

A. A qualified factory-trained manufacturer's representative shall certify in writing that the equipment has been installed, adjusted, and tested in accordance with the manufacturer's recommendations.

B. The Electrical Contractor shall provide three (3) copies of the manufacturer's representative's certification before final payment is made.

C. A certified test report of all standard production tests shall be available to the Engineer upon request.

3.9 TRAINING

A. The Electrical Contractor shall provide a training session for up to 3 Owner's representative for 2 normal workdays at a jobsite location determined by the owner.

B. The training session shall be conducted by a manufacturer's qualified representative. The training program shall consist of the instruction on the operation of the assembly, circuit breakers, and major components within the assembly.

C. The training program shall include the following:

1. Review of the project one-line drawings and schedules.

2. Review of the factory record shop drawings.

3. Review of all equipment in the electrical distribution system.

4. Discuss the maintenance timetable and procedures to be followed in an ongoing maintenance program.

5. Provide three ring binders to participants complete with copies of drawings and other course material covered.

END OF SECTION

SECTION 261120b – SECONDARY UNIT SUBSTATIONS – EMERGENCY POWER SINGLE ENDED

PART 1 - GENERAL

1.1 RELATED DOCUMENTS

A. All of the Contract Documents, as listed on the Table of Contents and including General and Supplementary Conditions and Division 01, General Requirements, shall be included in, and made part of, this Section.

1.2 DESCRIPTION OF WORK

A. The Elctrical Contractor shall furnish and install the secondary unit substation(s) complete from the incoming line terminals to the outgoing line terminals as specified herein and as shown on the contract drawings.

B. The secondary unit substation shall consist of primary equipment, transformer, and secondary equipment as specified below. The manufacturer of the unit substation shall furnish and coordinate all major components of the substations, including incoming primary equipment section, transformer and low-voltage section as well as circuit breakers, fusible switches, and metering components. Provide a single warranty covering all substation assemblies, transformers, and components.

1.3 RELATED WORK

A. For work to be included as part of this Section, to be furnished and installed by the Elctrical Contractor, refer to the Related Work section of Specification Section 26 0510.

B. Carefully examine all of the Contract Documents, criteria sheets and all other Sections of the specifications for requirements which affect work under this Section, whether or not such work is specifically mentioned in this Section.

1.4 REFERENCES

A. The secondary unit substation shall be designed, assembled, and tested and installed in accordance with latest applicable standards of NEMA, IEEE and ANSI, applicable to its major sections as follows:

1. Medium Voltage Metal Clad Switchgear

a. NEMA SG-4
b. NEMA SG-5
c. IEEE
d. ANSI 37.20.2

2. Transformer

a. NEMA

b. ANSI

3. Low Voltage Metal Enclosed Switchgear

a. ANSI C37.20 (Switchgear assemblies)
b. ANSI C37.13 (Low-voltage power circuit breakers)
c. ANSI C37.17 (Trip devices)
d. ANSI C39.1 (Meters)
e. NEMA SG-5 (Switchgear assemblies)
f. NEMA SG-3 (Low-voltage power circuit breakers)
g. UL 1558

1.5 QUALITY ASSURANCE

A. The manufacturers listed within this specification have been preselected for use on this project. No submittal will be accepted from a manufacturer other than specified.

B. To ensure system compatibility, all medium voltage distribution equipment, secondary unit substations, and low voltage distribution equipment shall be the products of one manufacturer.

1.6 WARRANTY

A. Attention is directed to provisions of the General Requirements, Supplementary General Requirements and Section 26 0510 regarding guarantees and warranties for the work under this Contract.

1.7 QUALIFICATIONS

A. The manufacturer of the secondary unit substation shall be the manufacturer of the major components within the assembly.

B. For the equipment specified herein, the manufacturer shall be ISO 9000, 9001 or 9002 certified.

C. The manufacturer of this equipment shall have produced similar electrical equipment for a minimum period of five (5) years. When requested by the Engineer, an acceptable list of installations with similar equipment shall be provided demonstrating compliance with this requirement.

D. The secondary unit substation shall be suitable for and certified to meet all applicable seismic requirements of the latest accepted edition of the Connecticut State Building Code for seismic zone 2 application. Guidelines for the installation consistent with these requirements shall be provided by the switchgear manufacturer and be based upon testing of representative equipment. The test response spectrum shall be based upon a 5% minimum damping factor, with a peak acceleration and ZPA as required per the Code. The tests shall fully envelope the response spectrum for all equipment natural frequencies up to at least 35 Hz.

1.8 DELIVERY, STORAGE AND HANDLING

A. Manufacturer's directions shall be followed completely in the delivery, storage, protection and installation. Promptly notify the Architect in writing of any conflict between any requirements of the Contract Documents and the manufacturer's directions. Obtain the Architect's written instructions before proceeding with the work. Should Elctrical Contractor perform any work that does not comply with the manufacturer's directions or written instructions from the Architect, he shall bear all costs arising in correcting any deficiencies that should arise.

B. Equipment and materials shall be delivered to the site and stored in original sealed containers, suitably sheltered from the elements, but readily accessible for inspection by the Architect until installed. All items subject to moisture damage such as controls shall be stored in dry, heated spaces. Equipment such as switchgear with heater elements installed shall have the heater elements energized after the equipment is received by the Elctrical Contractor.

C. The Elctrical Contractor shall be responsible to fully inspect all shipments for damage and report damage to the manufacturer and the Architect.

D. Equipment shall be tightly covered and protected against dirt, water, and chemical or mechanical injury and theft. At the completion of the work, equipment and materials shall be cleaned and polished thoroughly and turned over to the Owner in a condition satisfactory to the Architect. Damage or defects that develop before acceptance of the work shall be made good at the Elctrical Contractor's expense.

E. The Elctrical Contractor shall make necessary field measurements to ascertain space requirements, for equipment and connections to be provided under his respective Trade and shall furnish and install such sizes and shapes of equipment to allow for the final installation to conform to the drawings and specifications.

F. The secondary unit substation shall be split into shipping groups for handling as directed by the Elctrical Contractor or as the manufacturer’s limitations dictate. Shipping groups shall be designed to be shipped by truck, rail or ship. Shipping groups shall be bolted to skids. Accessories shall be packaged and shipped separately. Each switchgear shipping group shall be equipped with lifting eyes for handling solely by crane.

G. The secondary unit substation being stored prior to installation shall be stored so as to maintain the equipment in a clean and dry condition. If stored outdoors, indoor gear shall be covered and heated, and outdoor gear shall be heated.

1.9 ACCEPTABLE MANUFACTURERS

A. Cutler-Hammer

B. General Electric

C. Square D

D. Siemens

1.10 SELECTIVE COORDINATION

A. The emergency distribution system, the elevator distribution system and the fire pump distribution system shall be selectively coordinated to meet the requirements of the National Electrical Code, Articles, 620.62, 700.27, and 701.27 and NFPA 20.

B. For system reliability, the entire normal distribution system shall be coordinated down to 0.10 seconds to the extent practicable.

C. The switchgear manufacturer shall be responsible to select appropriate overcurrent protective device, fuse and/or circuit breaker frame, sensor and trip sizes for all devices upstream of other devices for a completely coordinated system. Refer to specification 26 0570 for additional information.

1.11 WITHSTAND AND INTERRUPTING RATINGS OF ELECTRICAL COMPONENTS

A. Calculated available 3 phase and single phase to ground short circuit currents indicated on the drawings are provided for information only to assist in the selection of withstand and interrupting ratings and coordination of devices and equipment.

B. Prior to submission of shop drawings, the manufacturer shall perform short circuit calculations in accordance with specification section 26 0570 to determine actual available 3 phase and single line to ground short circuit current at each component in the system based on actual equipment, feeder lengths, impedances, etc. of the equipment proposed for this project. Failure to perform the study prior to submission of shop drawings shall not relieve the manufacturer from providing devices that meet the requirements of the final study report.

C. Each component shall be UL listed and labeled and shall be fully rated to withstand and interrupt calculated available 3 phase and single phase to ground short circuit current levels. Series ratings will not be acceptable.

1.12 SUBMITTALS

A. Prepare and submit shop drawings in accordance with the requirements hereinbefore specified, and with Section 01 3300 – Submittal Procedures in the manner described therein, modified as noted hereinafter.

B. All shop drawings shall have clearly marked the appropriate specification number of drawing designation, for identification of the submittal.

C. Disposition of shop drawings shall not relieve the Elctrical Contractor from the responsibility for deviations from drawing or specifications, unless he has submitted in writing a letter itemizing or calling attention to such deviations at time of submission and secured written approval from the Engineer, nor shall such disposition of shop drawings relieve the Elctrical Contractor from responsibility for errors in shop drawings or schedules.

D. Shop drawings shall include, but shall not be limited to, the following:

1. Primary equipment

2. Transformers

3. Low voltage switchgear

4. A ¼"=1'-0" scale floor plan of the main electric room housing the substation with dimensions, Code clearances, etc., shall be submitted with the equipment shop drawings. Acceptance of these shop drawings shall be obtained prior to installation of feeder conduits:

Notes:

Equipment shop drawings will not be reviewed without the room/equipment layouts.

The Architect/Engineer reserve the right to rearrange equipment in electrical equipment rooms or spaces once final equipment dimensional information is known and prior to installation of the equipment. Install equipment in the final location selected by the Architect/Engineer at no additional cost to the Owner.

E. The switchgear manufacturer shall submit the following information with each submittal:

1. Master drawing index.

2. Front view elevation.

3. Floor plan.

4. Top view.

5. Single line.

6. Control schematics and wiring diagrams.

7. Nameplate schedule.

8. Component list/bill of material.

9. Conduit entry/exit locations.

10. Assembly ratings including:

    a. Short circuit rating.
    b. Information regarding series short circuit ratings.
    c. Voltage.
    d. Continuous current.

e. Basic Impulse level for equipment over 600 volts.
f. KVA.

11. Major component ratings including:

a. Voltage.
b. Continuous current.
c. Interrupting ratings.

12. Cable terminal sizes.

13. Connection details between close-coupled assemblies.

14. Composite floor plan of close-coupled assemblies.

15. Impedance for transformers.

16. Manufacturer's catalog data sheets.

17. Test reports.

18. The following additional information shall be submitted to the Engineer:

a. Busway connection.
b. Key interlock scheme drawing and sequence of operations.

19. The following product information shall be submitted:

a. Descriptive bulletins.
b. Product sheets.

1.13 CLOSEOUT SUBMITTALS AND O & M MANUALS

A. The following information shall be submitted for record purposes, in a binder, prior to final payment:

1. Final as-built drawings and information for items listed above.

2. Operation and maintenance manuals with the following information:

a. Instruction books and/or instruction leaflets
b. Recommended renewal parts

3. Wiring diagrams.

4. Certified production test reports.

5. Installation information.

6. Seismic certification and equipment anchorage details.

PART 2 - PRODUCTS

2.1 MEDIUM VOLTAGE LOAD INTERRUPTER SWITCHGEAR

A. Ratings

1. Switchgear assembly ratings shall be as follows:

a.	Nominal System Voltage:	4.16 kV three-phase, four wire
b.	System Grounding:	solid
c.	Maximum Design Voltage:	5 kV
d.	Basic Impulse Level:	60 kV
e.	Bus Continuous Current:	600 Amperes
f.	Momentary Current:	40 kA Asym.
g.	Two Second Current:	25 kA Sym.
h.	Switch Fault Close	40 kA Asym.
i.	Switch Continuous/Load Break	600 Amperes

Assembly Ratings					
Maximum Design (kV)	BIL	Momentary Current (Ka Asym.)	2-Second Current (kA Sym.)	Switch Fault Close (kA Asym.)	Switch Continuous/Load Break
5	60	40	25	40	600 or 1,200
5	60	61	38	61	600 or 1,200
15	95	40	25	40	600 or 1,200
15	95	61	38	61	600 or 1,200
27	125	40	25	40	600
27	125	60	38	60	600
38	150	20	12.5	20	600
38	150	30	25	30	600

B. Construction

1. The metal enclosed load interrupter switchgear shall consist of dead front, completely metal enclosed vertical sections containing load interrupter switches and fuses (where shown) of the number, rating and type noted on the drawings or specified herein.

2. The following features shall be supplied on every vertical section containing a three pole, two-position open-closed switch:

a. A high impact viewing window that permits full view of the position of all three switch blades through the closed door.

b. The door shall be interlocked with the switch so that:

1) The switch must be opened before the door can be opened.

2) The door must be closed before the switch can be closed.

c. A grounded metal barrier in front of every switch to prevent inadvertent contact with any live part, yet allow for a full-view inspection on the switch blade position.

d. Provision for padlocking the switch in the open or closed position.

e. Permanent "Open-Closed" switch position indicators.

f. Provide a full height, glass polyester, vertical barrier, top to bottom, separating cable compartment from switch and fuse compartment.

g. Where bus or cabling pass between adjacent sections of the 15 kV switchgear or between 15 kV switchgear and adjacent compartments, porcelain, feed-thru bushings shall be provided.

3. Vertical section construction shall be of the universal frame type using die formed and bolted parts. All enclosing covers and doors shall be fabricated from not less than 11 gauge steel. To facilitate installation and maintenance of cables and bus in each vertical section, a removable top cover and a removable, padlockable rear cover shall be provided.

4. Each vertical section containing a switch shall have a single, full length, flanged front door and shall be equipped with two rotary latch type padlockable handles. Provision shall be made for operating the switch and storing the removable handle without opening the full length door.

5. Each load interrupter switch shall have the following features:

a. Three pole gang operated.

b. Manual quick-make quick-break over toggle type mechanism utilizing a heavy duty coil spring to provide opening and closing energy.

c. Medium voltage switches that utilize a chain drive assembly to connect the stored energy mechanism to the operating handle shall provide sufficient vertical and horizontal phase barriers between the operating area of the chain and the live parts to prevent a broken chain from coming in contact with the live parts of the switch. In addition, each medium voltage switch shall come complete with a spare chain located within each medium voltage switch.

d. The speed of opening and closing the switch shall be independent of the operator, and it shall be impossible to tease the switch into any intermediate position under normal operation.

e. Separate main and break contacts to provide maximum endurance for fault close and load interrupting duty.

f. Insulating barriers between each phase and between the outer phases and the enclosure.

C. Bus

1. All phase bus conductors shall be silver plated copper and be mounted on NEMA rated porcelain or epoxy insulators.

2. Bus bars shall be arranged “A”, “B”, “C”, from front-to-back and/or top-to-bottom and/or left-to-right as viewed from the front of the equipment.

3. Ground bus shall be silver plated copper and be directly fastened to a bare metal surface of each vertical section, and be of a size sufficient to carry the rated 2 second current of the switchgear assembly. The ground bus shall be extended to within 18” of the incoming conductor conduit entrance.

D. Fuses

1. Fault protection shall be furnished by fuses rated as shown in the contract documents. The high-voltage fuses shall be general purpose type current limiting fuses. The fuses shall be designed to operate with the load interrupter switchgear and shall be tested and rated in accordance with the latest ANSI standards. Provide three (3) spare fuses for each fused switch.

2. High-Voltage fuses shall be stored in a non-condensing environment between 10 degrees C and 40 degrees C.

3. Ratings shall be as follows:

a.	Fuse ANSI Designation:	E
b.	Fuse Type:	Current Limiting
c.	Nominal System Voltage:	4.16 kV
d.	Maximum Design Voltage:	5.5 kV
e.	Current Rating:	200 Amperes
f.	Minimum Interrupting Rating:	50 kA RMS Sym

4. The following features shall be included on every Current Limiting fuse:

   a. High purity, graded silica-sand filler with pure silver (0.999 fine) elements encased in a glass-epoxy casing.

5. Furnish and install a wall mounted, heavy duty, steel spare fuse cabinet, size as required, with the capacity for 3 spare fuses for each fused switch in the room.

E. Special Switchgear Configurations

1. **Duplex Switchgear Assembly**

   a. **Furnish a duplex switchgear assembly configuration consisting of two load interrupter switches with common load side bus to feed one load**

circuit, which shall be [fused] [unfused]. Key interlocks shall be supplied to prevent paralleling the incoming sources, and to prevent opening the front door of each vertical section containing one of the two switches unless both switches are locked open.

F. Accessories

1. The secondary unit substation manufacturer shall furnish accessories for the primary medium voltage load interrupter switchgear for test, inspection, maintenance and operation, including:

2. 5 kV intermediate class surge arrestors shall be provided connected at the incoming terminations and securely grounded to the metal structure.

3. Provide personnel protective grounding apparatus for incoming and outgoing medium voltage conductors at the point of cable termination within the cable compartment. Ground studs and covers shall be AB Chance #C-600-2102 with #C-406-0416 cover or Salisbury #21191 with #21236 cover.

2.2 CAST COIL TRANSFORMERS

A. Ratings

1. The ratings of the transformer shall be as follows:

a.	kVA Rating:	1000/1333 AA/FA
b.	Impedance:	5.25 +/- 7 1/2%
c.	HV:	5 kV Delta
d.	HV BIL:	60 kV
e.	HV Taps:	+/-2 - 2 1/2% full capacity
f.	LV:	480/277 Volts, 3 Phase, 4 Wire, Wye
g.	LV BIL:	10 kV

B. Construction

1. Forced air (FA) units for 300 kVA and above shall contain all necessary components and wiring, including fans, for automatically increasing the kVA rating by 33%. The (FA) package shall include an electronic temperature monitor and fan control unit with the following features:

a. Digital readout

b. Indicating lights

1) green - power on
2) yellow - fan on
3) red - high temperature

c. audible high temperature alarm with alarm silence push button

d. max. temperature memory with read and reset switch

e. auto/manual fan control switch

f. system test switch

g. temperature sensing in all three low voltage coils.

h. Auxiliary alarm contact and means for remote control and temperature monitoring shall be provided.

2. The electrical insulation system shall utilize Class F material in a fully rated 185 degree C system. Transformer design temperature rise shall be based on a 30 degrees C average ambient over a 24 hour period with a maximum of 40 degrees C. Solid insulation in the transformer shall consist of inorganic materials such as porcelain, glass fiber, silica, electrical grade epoxy and Nomex. All insulating materials must be rated for continuous 185 degree C duty.

3. For enhanced environmental protection and improved withstandability to thermal shock and short circuit stresses, the primary and secondary coil assemblies shall be of cast coil design. Each cast coil shall be cast under vacuum to assure complete, void free epoxy resin impregnation throughout the entire insulation system.

4. The average temperature rise of the transformer windings shall not exceed 80 degrees C when the transformer is operated at full nameplate rating. The transformer(s) shall be capable of carrying 100% of nameplate kVA rating in a 40 degrees C max. 30 degrees C average ambient as defined by ANSI C57.12.00.

5. The transformer shall be supplied with a Category B enclosure per ANSI C57.12.55. The enclosure shall be a knockdown case design, for ease in fitting through limited openings, and shall be of heavy gauge sheet steel construction, equipped with removable panels for access to the core and coils. Front and rear panels shall incorporate ventilating grills.

6. The transformer shall be designed to meet the sound level standards for dry transformers as defined in NEMA TR1.

7. The transformer shall have copper coils.

8. Where Outdoor Dry-Type Transformers are shown on the drawings, they shall include **[thermostatically controlled space heaters fed from a fused control transformer in the secondary equipment or external source as shown and]** special ventilating grills that restrict the passage of rain, or spray providing the degree of weather protection of a NEMA 3R enclosure.

9. Transformers shall meet or exceed Class 1 efficiency levels per NEMA TP-1-2002, or the latest adopted edition.

B. Terminal Compartments

1. The transformer unit supplied shall include a HV flange and a LV flange. Connections between the primary device and transformer shall be copper cable, and between the transformer and secondary shall be flexible copper bus braid.

C. Accessories

1. The secondary unit substation manufacturer shall furnish accessories for the cast coil transformer for test, inspection, maintenance and operation, including:

a. Diagram instruction plate.
b. Provisions for lifting and jacking.
c. Removable case panel for access to high voltage strap type connector taps for de-energized tap changing.
d. Two ground pads.

2.3 LOW-VOLTAGE DRAW-OUT METAL ENCLOSED SWITCHGEAR

A. Ratings

1. Voltage rating shall be 480/277 volts, 3 phase, 4 wire. The entire assembly shall be suitable for 600 volts maximum AC Service.

2. The assembly shall be rated to withstand mechanical forces exerted during short circuit conditions when connected directly to a power source having available fault current of 42,000 amperes symmetrical at rated voltage.

3. The bus system shall have a minimum ANSI 4 cycle short circuit withstand rating of 100,000 amperes symmetrical.

4. All circuit breakers shall have a minimum symmetrical interrupting capacity of 42,000 amperes. To assure a fully selective system, all circuit breakers shall have 30 cycle short time withstand ratings equal to their symmetrical interrupting ratings, regardless of whether equipped with instantaneous trip protection or not.

5. Where circuit breakers are equipped with current limiters, the combination shall have short time ratings in accordance with the characteristics of the limiter selected.

6. All ratings shall be tested to the requirements of ANSI C37.20.1, C37.50 and C37.51 and UL witnessed and approved.

B. Construction

1. The switchgear shall consist of the required number of vertical sections bolted together to form a rigid assembly. The sides and rear shall be covered with removable bolt-on covers. All edges of front covers or hinged front panels shall be formed. Provide ventilators located on the top of the switchgear over the breaker and bus compartments to ensure adequate ventilation within the enclosure. Hinged rear doors, complete with provisions for padlocking, shall be provided.

2. The switchgear shall be suitable for use as service entrance equipment and be labeled in accordance with UL requirements.

3. The assembly shall be provided with adequate lifting means and shall be capable of being moved into installation position. Provisions shall be made for jacking of shipping groups, for removal of skids or insertion of equipment rollers. Base of assembly shall be suitable for rolling directly on pipes without skids.

4. The switchgear shall be low voltage metal enclosed switchgear, utilizing air power circuit breakers as herein specified.

5. Each vertical steel unit forming part of the switchgear line-up shall be a self-contained housing having one or more individual breaker or instrument compartments, a centralized bus compartment and a rear cabling compartment. Each individual circuit breaker compartment, or cell, shall be segregated from adjacent compartments and sections, including the bus compartment, by means of barriers. It shall be equipped with draw-out rails and primary and secondary disconnecting contacts. Removable hinge pins shall be provided on the breaker compartment door hinges. Current transformers for feeder instrumentation, shall be located within the appropriate breaker cells.

6. Provide a separate, barriered section for the fire pump tap. No other components/equipment shall be located within this section.

7. The stationary part of the primary disconnecting devices for each power circuit breaker shall consist of a set of contacts extending to the rear through a glass polyester insulating support barrier; corresponding moving finger contacts suitably spaced shall be furnished on the power circuit breaker studs which engage in only the connected position. The assembly shall provide multiple silver-to-silver full floating high pressure point contacts with uniform pressure on each finger maintained by springs. Each circuit shall include the necessary three phase bus connections between the section bus and the breaker line side studs. Load studs shall be equipped with insulated copper load extension busses terminating in solderless type terminals in the rear cable compartment of each structure. Bus extensions shall be silver or tin-plated where outgoing terminals are attached.

8. The secondary disconnecting devices shall consist of floating fingers mounted on the removable unit and engaging flat contact segments at the rear of the compartment. The secondary disconnecting devices shall be silver-plated and sliding contact engagement shall be maintained in the "connected" and "test" positions.

9. The removable power circuit breaker element shall be equipped with disconnecting contacts, wheels and interlocks for draw-out application. It shall have four positions, "connected", "test", "disconnected" and "removed" all of which permit closing the compartment door. The breaker draw-out element shall contain a worm gear levering "in" and "out" mechanism with removable lever crank. Mechanical interlocking shall be provided so that the breaker is in the tripped position before levering "in" or "out" of the cell. The breaker shall

include a provision for padlocking open to prevent manual or electric closing. The padlocking shall also secure the breaker in the connected, test, or disconnected position by preventing levering.

10. Where required to prevent flashover from the arc chutes to ground, an insulating flash shield shall be mounted above each circuit breaker.

11. Provide, in the cell when the circuit breaker is withdrawn, a safety shutter which automatically covers the line and load stabs and protect against accidental contact.

12. Provide a rear compartment barrier between the cable compartment and the main bus to protect against inadvertent contact with main or vertical bus bars.

13. Provide a metal barrier full height and depth between adjacent vertical structures in the cable compartment.

14. Provide a glass polyester full height and depth barrier between adjacent vertical structures in the bus compartment with appropriate slots for main bus.

C. Bus

1. All bus bars shall be silver or tin plated copper. Main horizontal bus bars shall be mounted with all three phases arranged in the same vertical plane. Bus sizing shall be based on ANSI standard temperature rise criteria of 65 degrees C over a 40 degrees C ambient (outside the enclosure).

2. In addition to full UL air clearances, the bus shall be insulated with a minimum of 5 mil thickness of epoxy resin coating. Removable non-PVC boots shall be provided to give access to the cross bus joints for inspection and maintenance.

3. Bus bars shall be arranged “A”, “B”, “C”, from front-to-back and/or top-to-bottom and/or left-to-right as viewed from the front of the equipment.

4. Provide a full capacity neutral bus.

5. A copper ground bus shall be furnished firmly secured to each vertical section structure and shall extend the entire length of the switchgear. The ground bus short time withstand rating shall meet that of the largest circuit breaker within the assembly.

6. All hardware used on conductors shall be high-tensile strength and zinc plated. All bus joints shall be provided with bellville type washers.

D. Circuit Breakers

1. All protective devices shall be draw-out low-voltage power circuit breakers. Frame ratings shall be 800, 1600, 2000, 3200, 4000 or 5000 amperes. All breakers shall be UL listed for application in their intended enclosures for 100% of their continuous ampere rating.

2. Breakers shall be manually operated (MO).

3. Power circuit breakers shall have a minimum symmetrical interrupting capacity as indicated above.

4. In order to achieve required interrupting capacities, main and feeder power circuit breakers may require current limiting fuses. If required, limiters shall be integrally mounted or shall be mounted on a separate draw-out fuse truck. Current limiters shall be coordinated with the breaker trip device, so as to avoid unnecessary blowing of the current limiters. Breakers shall include an anti-single-phase device that will trip the breaker in the event of a blown limiter, indicate from the front of the breaker which limiter is blown, and prevent the breaker from being re-closed on a single-phase condition due to missing or blown limiters.

5. Current limiters which are integrally mounted with breaker shall be inaccessible until the breaker is completely withdrawn from its compartment assuring complete isolation. Current limiters mounted on a separate fuse truck shall be key interlocked with the respective breaker to prevent withdrawing or insertion unless the breaker is locked open.

E. Trip Units

1. Each draw-out low voltage power circuit breaker shall be equipped with a solid-state tripping system consisting of three current sensors, microprocessor-based trip device and flux-transfer shunt trip. Current sensors shall provide operation and signal function. The trip unit shall use microprocessor-based technology to provide the basic adjustable time-current protection functions. True RMS sensing circuit protection shall be achieved by analyzing the secondary current signals received from the circuit breaker current sensors and initiating trip signals to the circuit breaker trip actuators when predetermined trip levels and time delay settings are reached. Interchangeable rating plugs shall establish the continuous trip ratings of each circuit breaker.

2. The trip unit shall have an LCD or LED display to indicate mode of trip following an automatic trip operation. The indication of the mode of trip shall be retained after an automatic trip. A trip reset button shall be provided to turn off the display indication after an automatic trip.

3. Complete system selective coordination shall be provided by the addition of the following individually adjustable time/current curve shaping solid-state elements:

a. All breakers shall have adjustments for long delay pick-up and time.

b. Main and Feeder breakers shall have individual adjustments for short delay pick-up and time, and include I^2t settings.

c. Main breakers shall have no instantaneous trip function.

d. Feeder breakers shall have an adjustable instantaneous pick-up.

e. Main and Feeder breakers shall have individually adjustable ground fault current pick-up and time, and include I^2t settings.

4. The trip unit shall contain an integral test panel with a test selector switch and a test pushbutton or a portable full function test set. The test kit shall enable the user to select the values of test currents within a range of available settings. The basic protection functions shall not be affected during test operations. The breaker may be tested in the Trip or No trip test mode.

   a. The test kit, when connected to a 120V, 50/60 Hz source, shall provide power for testing the trip unit while the breaker is out of the cell or in the disconnect or withdrawn position.

5. Trip unit shall have thermal memory for enhanced circuit protection.

6. The alpha-numeric display shall be provided to indicate the following data:

   a. Cause of trip.
   b. Instantaneous current on all three phases.

7. The trip unit shall include a power/relay module which shall supply control power to the readout display. Following an automatic trip operation of the circuit breaker, it shall maintain the cause of trip history and the trip target as long as its internal power supply is available.

8. Metering display accuracy of the complete system including current sensors, auxiliary C.T.'s, and the trip unit shall be +/- 2% of full scale for current values.

9. The trip unit shall include metering capabilities as follows:

   a. Volts (per phase)
   b. Amperes (per phase)
   c. Kilowatt Hours (kWH)
   d. Kilowatt demand (kW)
   e. Instantaneous demand (kW)

10. The energy-monitoring parameter values (peak demand, present demand, and energy consumption) shall be indicated in the trip unit alpha-numeric display panel.

11. Metering display accuracy of the complete system of full scale shall be +/- 3% for power values, +/- 4% of full scale for energy values.

12. The trip unit shall be equipped to permit communication via a network twisted pair for remote monitoring and control.

13. Furnish and install all requires appurtenances, as required, within the switchgear for future trip unit communications to a central software package.

F. Energy Reducing Maintenance Switch

1. Circuit breakers specified herein and/or on the drawings with no instantaneous trip function or instantaneous trip set to a value of “0” shall contain an energy reducing maintenance switch. Maintenance switch shall include local status audible (with silence switch) and visual indication as well as auxiliary contacts for remote status monitoring.

G. Accessories

1. The secondary unit substation manufacturer shall furnish accessories for the low voltage metal enclosed switchgear for test, inspection, maintenance and operation, including:

2. A traveling type circuit breaker lifter, rail-mounted on top of switchboard.

2.4 WIRING/TERMINATIONS

A. On the medium voltage load interrupter switchgear, one two hole NEMA pad per phase shall be provided for attaching Elctrical Contractor supplied compression, crimp type cable terminal suitable for copper cable lugs for the number and sizes of conductors as indicated on the drawings. Sufficient space shall be supplied for Elctrical Contractor supplied electrical stress relief termination devices.

B. On the low voltage equipment, NEMA 2-hole compression, crimp type lugs shall be provided for all line and load terminations suitable for copper or aluminum cable rated for 75 degrees C of the size indicated on the drawings. A termination system shall be provided such that no additional cable bracing, tying or lashing is required to maintain the short circuit withstand ratings of the assembly through 65kA.

C. Lugs shall be provided in the incoming line section for connection of the main grounding conductor. Additional lugs for connection of other grounding conductors shall be provided.

D. All control wire shall be type SIS. Wire bundles shall be secured with nylon ties and anchored to the assembly with the use of prepunched wire lances. All current transformer secondary leads shall first be connected to conveniently accessible short circuit terminal blocks before connecting to any other device. Four shorting screws with provisions for storage shall be provided. All groups of control wires leaving the switchgear shall be provided with terminal blocks with suitable numbering strips. Insulated locking spade terminals shall be provided for all control connections, except where saddle type terminals are provided integral to a device. Provide wire markers at each end of all control wiring. Plug in terminal blocks shall be provided for all shipping split wires. Terminal connections to remote devices or sources shall be front accessible via removable trays above each circuit breakers. Control fuses for each electrically operated circuit breakers shall also be located in these trays.

E. Small wiring, necessary fuse blocks and terminal blocks within each vertical section shall be furnished as required. Control components mounted within the assembly, such as fuse blocks, relays, pushbuttons, switches, etc., shall be suitably marked for identification corresponding to appropriate designations on manufacturer's wiring diagrams.

2.5 CUSTOMER METERING

A. Provide customer metering devices as specified herein. Provide a separate customer metering compartment with front hinged door. Include associated instrument transformers.

B. Current transformers shall be wired to shorting type terminal blocks.

C. Provide potential transformers including primary and secondary fuses with disconnecting means or fused potential taps as the potential source for metering as required.

D. Microprocessor-based metering system.

1. Provide a full function electronic meter on all secondary low voltage main devices. The meter shall have the features and functions specified below. The meter shall be UL recognized, CSA certified and also meet ANSI Standard C37.90.

2. The meter shall provide direct reading metered or calculated values of the items listed below and shall auto range between Units, Kilo-units, and Mega-units for all metered values. Accuracy indicated below to be of read or calculated values.

a. AC Current (Amperes) in A, B, and C phase, 3 Phase Average and Neutral (N). Accuracy +/- 0.2% (provide phase and neutral current transformer).

b. AC Voltage (Volts) for A-B, B-C, and C-A, Phase Average, A-N, B-N, and C-N and Average Phase to N. Accuracy +/-0.2%.

c. Real Power (WATTS), Reactive Power (VARS), Apparent Power (VA), for each phase and system (system shall apply only for 3 wire applications). Accuracy +/- 0.4%. Forward/Reverse indication shall be provided.

d. Real Energy (WHR), Reactive Energy (VARHR), Apparent Energy (VAHR) for each phase and system (system shall apply only for 3 wire applications). Accuracy +/- 0.4%. Forward/Reverse indication shall be provided.

e. Frequency (HERTZ) Accuracy +/- 0.04%.

f. Demand values for System Current (AMPERES), System Real Power (WATTS), System Reactive Power (VARS), and System Apparent Power (VA).

g. Power Factor both Displacement only 60 cycle fundamental WATTS to VA and Apparent total WATTS to total VARS including harmonics for A, B, and C phase and system. Accuracy +/- 0.4%.

h. Current Percent Total Harmonic Distortion (THD) in A, B, and C phase, and N.

i. Voltage percent THD in A-B, B-C, and C-A phase, A-N, B-N, and C-N.

j. K-Factor (sum of the squares of harmonic currents times the square of their harmonic numbers).

k. Transformer Derating Factor (1.414 divided by the Crest Factor)

l. Crest Factor (ratio of peak current to RMS current).

m. Waveform capture and display.

n. Three (3) 4-20 milliampere outputs, assignable.

3. Make provisions for an addressable communication card capable of transmitting all data, remotely controlling and programming the meter over a compatible local area network to a central personal computer for storage, analysis, display and printout. The network shall also be capable of transmitting data in RS232c or RS485 format.

4. Provide current transformers as required for each phase and neutral circuit with ratings sized for incoming service or associated feeder. Provide potential transformers as required for proper operation of the meter.

5. The meter control power shall be capable of being supplied from the monitored incoming AC line without the need for a separate AC control circuit unless a separate 120 or 240 volt source is indicated on the drawings.

2.6 ENCLOSURES

A. The substation described in these specifications shall be indoor construction, with devices arranged as shown on contract drawings.

2.7 NAMEPLATES

A. Engraved nameplates, mounted on the face of the assembly, shall be furnished for all main and feeder circuits. Nameplates shall be laminated plastic, black characters on white background, and secured with screws. Characters shall be 3/16 inch high, minimum. Nameplates shall give item designation and circuit number as well as frame ampere size and appropriate trip rating.

B. Furnish master nameplate giving switchgear designation, voltage ampere rating, short circuit rating, manufacturer's name, general order number and item number.

C. Control components mounted within the assembly, such as fuse blocks, relays, pushbuttons, switches, etc., shall be suitably marked for identification corresponding to appropriate designations on manufacturer's drawings and/or wiring diagrams.

2.8 FINISH

A. Prior to assembly, all enclosing steel shall be thoroughly cleaned and phosphatized. A powder coating shall be applied electrostatically, then fused on by baking in an oven. The coating is to have an average thickness of not less than 3.0 mils. The finish shall have the following properties:

1.	Impact resistance (ASTM D-2794):	60 Direct/60 Indirect
2.	Pencil Hardness (ASTM D-3363):	H
3.	Flexibility (ASTM D-522):	Pass 1/8 inch mandrel
4.	Salt Spray(ASTM B117-85 [20]):	600 hours
5.	Color:	ANSI 61 Gray

PART 3 - EXECUTION

3.1 COOPERATION AND WORK PROGRESS

A. The Electrical work shall be carried on under the usual construction conditions, in conjunction with all other work at the site. The Elctrical Contractor shall cooperate with the Architect, Construction Manager, all other Subcontractors and equipment suppliers working at the site. The Elctrical Contractor shall coordinate the work and proceed in a manner so as not to delay the progress of the project.

B. The Elctrical Contractor shall coordinate his work with the progress of the building and other Trades so that he will complete his work as soon as conditions permit and such that interruptions of the building functions will be at a minimum. Any overtime hours worked or additional costs incurred due to lack of or improper coordination with other Trades or the Owner by the Elctrical Contractor, shall be assumed by him without any additional cost to the Owner.

C. The Elctrical Contractor shall furnish information on all equipment that is furnished under this Section but installed under another Section to the installing Subcontractor as specified herein.

D. The Elctrical Contractor shall provide all materials, equipment and workmanship to provide for adequate protection of all electrical equipment during the course of construction of the project. This shall also include protection from moisture and all foreign matter. The Elctrical Contractor shall also be responsible for damage which he causes to the work of other Trades, and he shall remedy such injury at his own expense.

E. Waste materials shall be removed promptly from the premises. All material and equipment stored on the premises shall be kept in a neat and orderly fashion. Material or equipment shall not be stored where exposed to the weather. The Elctrical Contractor shall be responsible for the security, safekeeping and damages, including acts of vandalism, of all material and equipment stored at the job site.

F. The Elctrical Contractor shall be responsible for unloading all electrical equipment and materials delivered to the site. This shall also include all large and heavy items or equipment which require hoisting. Consult with the Construction Manager for

hoisting/crane requirements. During construction of the building, the Elctrical Contractor shall provide additional protection against moisture, dust accumulation and physical damage of the main service and distribution equipment. This shall include furnishing and installing temporary heaters within these units, as approved, to evaporate excessive moisture and ventilate it from the room, as may be required.

G. It shall be the responsibility of the Elctrical Contractor to coordinate the delivery of the electrical equipment to the project prior to the time installation of equipment will be required; but he shall also make sure such equipment is not delivered too far in advance of such required installation, to ensure that possible damage and deterioration of such equipment will not occur. Such equipment stored for an excessively long period of time (as determined in the opinion of the Architect) on the project site prior to installation may be subject to rejection by the Architect.

H. The Elctrical Contractor shall erect and maintain, at all times, necessary safeguards for the protection of life and property of the Owner, Workmen, Staff and the Public.

I. Prior to installation, the Elctrical Contractor has the responsibility to coordinate the exact mounting arrangement and location of electrical equipment to allow proper space requirements as indicated in the NEC. Particular attention shall be given in the field to group installations. If it is questionable that sufficient space, conflict with the work of other Subcontractors, architectural or structural obstructions will result in an arrangement which will prevent proper access, operation or maintenance of the indicated equipment, the Elctrical Contractor shall immediately notify the Contractor and not proceed with this part of the Contract work until definite instructions have been given to him by the Architect.

J. The Elctrical Contractor shall not allow any equipment or piping foreign to the electrical installation to be installed or pass through any room in which electrical systems or equipment are located, such as electric rooms, electric closets, telephone or data closets. The Elctrical Contractor shall notify the Contractor of such violations and request immediate removal.

3.2 INSTALLATION

A. General

1. Unless specifically noted or indicated otherwise, all equipment and material specified in Part 2 of this specification or indicated on the drawings shall be installed under this Contract whether or not specifically itemized herein. This Section covers particular installation methods and requirements peculiar to certain items and classes or material and equipment.

2. The Elctrical Contractor shall obtain detailed information from manufacturers of equipment provided under Part 2 of this specification as to proper methods of installation.

3. The Elctrical Contractor shall obtain final roughing dimensions and other information as needed for complete installation of items furnished under other Sections or furnished by the Owner.

4. The Elctrical Contractor shall keep fully informed of size, shape and position of openings required for material and equipment provided under this and other Sections. Ensure that openings required for work of this Section are coordinated with work of other Sections. Provide cutting and patching as necessary.

5. The Elctrical Contractor shall coordinate the electric service installation with the Owner.

6. All miscellaneous hardware and support accessories, including support rods, nuts, bolts, screws and other such items, shall be of a galvanized or cadmium plated finish or of another approved rust-inhibiting coating.

7. Throughout this Section where reference is made to steel channel supports, it shall be understood to mean that the minimum size shall be 1 5/8" mild strip steel with minimum wall thickness of 0.105", similar to Unistrut P1000 or equal products manufactured by Kindorf or Husky Products Co.

B. Concrete Housekeeping Pads

1. Concrete pads shall be installed for all freestanding substations.

2. The Construction Manager shall provide the concrete work. Elctrical Contractor shall supervise and coordinate concrete work to ensure that proper grounding cable, rods, conduit, etc., are located as detailed and as required. The Elctrical Contractor shall also ensure that the concrete is level to within manufacturers published tolerances.

3. All concrete housekeeping pads shall extend a minimum of 6" on each side from the equipment mounted on it. Mounting height of each overcurrent/disconnect device in the above equipment shall not exceed 6'-6" above finished floor. If overcurrent devices exceed 6’-6” above finished floor as a result of the housekeeping pad, the pad shall extend in front of the gear a minimum of 4’-0”.

C. Electrical Distribution Equipment

1. The Elctrical Contractor shall install the secondary unit substation per the manufacturers recommendations and the Contract Drawings.

2. The installation of all equipment, including working space requirements, shall conform to all NEC and local codes.

3. All necessary hardware to secure the assembly in place shall be provided by the Elctrical Contractor.

4. <u>The Elctrical Contractor shall ensure that no piping, ductwork or other equipment foreign to the electrical trade passes through the area extending from the floor to the structural ceiling with the width and depth equal to that of the electrical distribution equipment plus 6" on either side of panel</u>.

5. Floor mounted assemblies shall be installed on concrete housekeeping pads and shall be provided with adequate lifting means. Floor mounted assemblies shall be capable of being moved into installation position and bolted directly to the floor without the use of floor sills. The Elctrical Contractor shall ensure the floor is level to 1/8 inch per 3-foot distance in any direction.

6. All electrical equipment shall be installed such that the handle of the highest circuit breaker does not exceed 6’-6” above finished floor.

7. The location of all electrical distribution equipment installed in mechanical or plumbing equipment rooms shall be coordinated with the respective Subcontractor.

8. The equipment shall be installed and checked in accordance with the manufacturer’s recommendations prior to first energization. This shall include but not limited to:

   a. Checking to ensure that the pad location is level to within .125 inches.

   b. Checking to ensure that all bus bars are torqued to the manufacturer's recommendations.

   c. Assemble all shipping sections, remove all shipping braces and connect all shipping split mechanical and electrical connections.

   d. Secure assemblies to foundation or floor channels.

   e. Measure and record megger readings phase-to-phase, phase-to-ground, and neutral-to-ground (four-wire systems only).

   f. Inspect and install all circuit breakers, components, etc. in their proper compartments.

9. Identification shall be provided for all electrical distribution equipment. The electrical system identification shall clearly describe the equipment connected. Method of identification shall be by laminated nameplate made of bakelite or similar material with engraved letters at least 1/4" high and securely attached to the equipment with galvanized screws. Adhesives or cements shall not be used. A list of nameplates shall be submitted to the Architect for approval prior to fabrication.

10. Control wiring shall be provided as required. Interface all local and remote control wiring and operational systems for each load.

D. Substations

1. The substation, including the transformer, shall be installed on vibration isolators meeting seismic requirements.

2. On grade substations

a. Install the transformer with the manufacturer's standard vibration isolator elastomer pad with minimum thickness of 0.5 inches.

b. Install the entire substation cabinet on ribbed or waffle pattern elastomer vibration isolator pads, minimum 0.5 inches thick.

c. Select the areas and locations of pads such that the bearing pressure is within manufacturer's recommended range. Isolate hold-down bolts using elastomer bushings and washers, minimum 0.25 inches thick.

3. Above grade substations

a. Install the transformer and entire substation on elastomer-in-shear mounts made of material suited for the service.

b. Mounts shall be selected for minimum deflections as follows:

1)	Transformer:	0.2 inch
2)	Substation Cabinet:	0.1 inch

c. Provide steel rails under the transformer to transfer the load to the isolator mounts and provide a stable installation.

3.3 REQUIREMENTS FOR EMERGENCY SYSTEMS WIRING

A. All feeder wiring for the emergency and legally required systems shall be installed in spaces or areas that are fully protected by and automatic fire suppression system. Feeders that are not protected by an automatic fire suppression system, such as feeders running horizontally above finished ceilings, shall be installed within dedicated 2-hour fire rated rooms, closets or shafts or shall be a listed 2 hour fire rated assembly, such as MI cable.

B. All feeder and branch circuit wiring for each system of the emergency and legally required systems shall be kept entirely independent of all other wiring, devices and equipment, and shall not enter the same raceways, boxes or cabinets with each other or other wiring, except as specifically allowed by the Code.

C. Where multiple transfer switches are provided for the same branch of emergency power, all wiring between the multiple systems shall be kept entirely independent of each other and all other branches of emergency power, except as specifically allowed by the Code

3.4 MATERIALS AND WORKMANSHIP

A. All materials and equipment shall be new and unused and shall meet requirements of the latest Standards of NEMA, UL, IPCEA, ANSI and IEEE. Equipment shall have components required or recommended by OSHA, applicable NFPA documents and shall be UL listed and labeled.

B. Despite references in the specifications or on the drawings to materials or pieces of equipment by name, make or catalog number, such references shall be interpreted as establishing standards of quality for materials and performance.

C. Finish of materials, components and equipment shall not be less than Industry good practice. When material or equipment is visible or subject to corrosive or atmospheric conditions, the finish shall be as approved by the Architect.

D. Provide proper access to material or equipment that requires inspection, replacement, repair or service. If proper access cannot be provided, confer with the Architect as to the best method of approach to minimize effects of reduced access.

E. All work shall be installed in a neat and workmanlike manner and shall be done in accordance with all Local and State Codes.

F. The Owner will not be responsible for material, equipment or the installation of same before testing and acceptance.

3.5 FACTORY TESTING

A. The following standard factory tests shall be performed on the primary equipment provided under this section. All tests shall be in accordance with the latest version of ANSI and NEMA standards.

B. Medium voltage switchgear

1. The following standard factory tests shall be performed on the circuit breaker element provided under this section. All tests shall be in accordance with the latest version of ANSI standards.

a. Alignment test with master cell to verify all interfaces and interchangeability.

b. Circuit breakers operated over the range of minimum to maximum control voltage.

c. Factory setting of contact gap.

d. One-minute dielectric test per ANSI standards.

e. Final inspections and quality checks.

2. The following production test shall be performed on each breaker housing.

a. Alignment test with master breaker to verify interfaces.

b. One-minute dielectric test per ANSI standards on primary and secondary circuits.

c. Operation of wiring, relays, and other devices verified by an operational sequence test.

d. Final inspection and quality check.

B. Transformers

1. The following factory tests shall be made on all transformers. All tests shall be in accordance with the latest revision of ANSI and NEMA standards:

a. Resistance measurements of all windings on the rated voltage connection of each unit and at the tap extremes of one unit only of a given rating on this project.

b. Ratio tests on the rated voltage connection and on all tap connections.

c. Polarity and phase-relation tests on the rated voltage connections.

d. No-load loss at rated voltage on the rated voltage connection.

e. Exciting current at rated voltage on the rated voltage connection.

f. Impedance and load loss at rated current on the rated voltage connection of each unit and on the tap extremes of one unit only of a given rating on this project.

g. Applied potential test.

h. Induced potential tests.

2. The following special factory tests shall be performed on the equipment provided under this section. All tests shall be in accordance with the latest revision of ANSI and NEMA standards.

a. Temperature test(s) shall be made on all units. Tests shall not be required when there is available a record of a temperature test on an essentially duplicate unit. When a transformer is supplied with auxiliary cooling equipment to provide more than one kVA rating, temperature tests as listed above shall be made on the lowest kVA OA or AA rating and the highest kVA FA rating.

b. Basic impulse test on all windings.

C. Low Voltage Metal Enclosed Switchgear

1. The switchgear shall be completely assembled, wired, adjusted and tested at the factory. After assembly, the complete switchgear shall be tested to assure the accuracy of the wiring and the functioning of all equipment. The main bus system shall be given a dielectric test of 2200 volts for one minute between live parts and ground and between opposite polarities.

2. The wiring and control circuits shall be given a dielectric test of 1500 volts for one minute or 1800 volts for one second between live parts and ground, in accordance with ANSI C37.20.1.

D. Factory tests as outlined above shall be witnessed by the Owner's representative.

1. The manufacturer shall notify the Owner two (2) weeks prior to the date the tests are to be performed.

E. The manufacturer shall provide three (3) certified copies of factory test reports.

3.6 FIELD SETTINGS

A. The Elctrical Contractor shall perform field adjustments of the circuit breakers as required to place the equipment in final operating condition. The settings shall be in accordance with the approved protective device coordination study or as directed by the Engineer.

B. For transformers, adjust taps to deliver appropriate voltage and measure primary and secondary voltage to confirm proper setting.

3.7 FIELD QUALITY CONTROL

A. Provide the services of a qualified factory-trained manufacturer's representative to assist the Elctrical Contractor in installation and start-up of the equipment specified under this section for a period of 2 working days. The manufacturer's representative shall provide technical direction and assistance to the Elctrical Contractor in general assembly of the equipment, connections and adjustments, and testing of the assembly and components contained therein.

B. The Elctrical Contractor shall provide three (3) copies of the manufacturer's field start-up report before final payment is made.

3.8 MANUFACTURER'S CERTIFICATION

A. A qualified factory-trained manufacturer's representative shall certify in writing that the equipment has been installed, adjusted, and tested in accordance with the manufacturer's recommendations.

B. The Elctrical Contractor shall provide three (3) copies of the manufacturer's representative's certification before final payment is made.

C. A certified test report of all standard production tests shall be available to the Engineer upon request.

3.9 TRAINING

A. The Elctrical Contractor shall provide a training session for up to 3 Owner's representative for 2 normal workdays at a jobsite location determined by the owner.

B. The training session shall be conducted by a manufacturer's qualified representative. The training program shall consist of the instruction on the operation of the assembly, circuit breakers, and major components within the assembly.

C. The training program shall include the following:

1. Review of the project one-line drawings and schedules.

2. Review of the factory record shop drawings.

3. Review of all equipment in the electrical distribution system.

4. Discuss the maintenance timetable and procedures to be followed in an ongoing maintenance program.

5. Provide three ring binders to participants complete with copies of drawings and other course material covered.

END OF SECTION

SECTION 262010 – LOW VOLTAGE DISTRIBUTION

PART 1 - GENERAL

1.1 RELATED DOCUMENTS

A. All of the Contract Documents, as listed on the Table of Contents and including General and Supplementary Conditions and Division 01, General Requirements, shall be included in, and made part of, this Section.

1.2 DESCRIPTION OF WORK

A. The Electrical Contractor shall furnish and install the low voltage distribution equipment as specified herein and as shown on the contract drawings.

B. The following low voltage distribution equipment shall be provided, as a minimum, but not necessarily limited to the following:

1. Normal distribution system.
2. Emergency (life safety) distribution system.
3. Legally required distribution system
4. Optional stand-by distribution system

5. Grounding.
6. Hoisting, rigging, setting of all equipment.
7. Testing, cleaning and adjusting.
8. Power company related work and backcharges.
9. Shop drawings.
10. Power system studies and trip settings.
11. Busway.
12. Enclosed circuit breakers.
13. Fuses
14. Motor controllers - magnetic starters.
15. Motor disconnect devices.
16. Panelboards - branch circuit and distribution. (100A-1200A)
17. Safety switches.
18. Distribution switchboards (1600-3000A).
19. Transformers - dry type.

1.3 RELATED WORK

A. For work to be included as part of this Section, to be furnished and installed by the Electrical Contractor, refer to the Related Work section of Specification Section 26 0510.

B. Carefully examine all of the Contract Documents, criteria sheets and all other Sections of the specifications for requirements which affect work under this Section, whether or not such work is specifically mentioned in this Section.

1.4 REFERENCES

A. Low voltage distribution equipment and all components shall be designed, manufactured and tested in accordance with the latest applicable standards of ANSI, NEMA and UL as follows:

1. Busway

a. NEMA BU.1.
b. ANSI/UL 857.
c. CSA

2. Molded Case Circuit Breakers

a. UL 489 - Molded Case Circuit Breakers
b. NEMA AB1 - Molded Case Circuit Breakers
c. NEMA 250 - Enclosures for Electrical Equipment
d. Fed. Spec. W-C-375a

3. Motor Control Centers

a. NEMA
b. ANSI
c. UL 845

4. Panelboards

a. UL 67 – Panelboards
b. UL 50 – Cabinets and boxes
c. NEMA PB-1
d. Fed. Spec. W-P115C
e. Fed. Spec. W-C-375a
f. Circuit Breaker – Type I, class I
g. Fusible Switch – Type II, class I

1.5 QUALITY ASSURANCE

A. The manufacturers listed within this specification have been preselected for use on this project. No submittal will be accepted from a manufacturer other than specified.

B. To ensure system compatibility, all medium voltage distribution equipment, secondary unit substations, and low voltage distribution equipment shall be the products of one manufacturer.

1.6 WARRANTY

A. Attention is directed to provisions of the General Requirements, Supplementary General Requirements and Section 26 0510 regarding guarantees and warranties for the work under this Contract.

1.7 QUALIFICATIONS

A. The manufacturer of the low voltage distribution equipment shall be the manufacturer of the major components within the equipment.

B. For the equipment specified herein, the manufacturer shall be ISO 9000, 9001 or 9002 certified.

C. The manufacturer of this equipment shall have produced similar electrical equipment for a minimum period of five (5) years. When requested by the Engineer, an acceptable list of installations with similar equipment shall be provided demonstrating compliance with this requirement.

D. The low voltage distribution equipment shall be suitable for and certified to meet all applicable seismic requirements of the latest accepted edition of the Connecticut State Building Code for seismic zone 2 application. Guidelines for the installation consistent with these requirements shall be provided by the switchgear manufacturer and be based upon testing of representative equipment. The test response spectrum shall be based upon a 5% minimum damping factor, with a peak acceleration and ZPA as required per the Code. The tests shall fully envelope the response spectrum for all equipment natural frequencies up to at least 35 Hz.

1.8 DELIVERY, STORAGE AND HANDLING

A. Manufacturer's directions shall be followed completely in the delivery, storage, protection and installation. Promptly notify the Architect in writing of any conflict between any requirements of the Contract Documents and the manufacturer's directions. Obtain the Architect's written instructions before proceeding with the work. Should Electrical Contractor perform any work that does not comply with the manufacturer's directions or written instructions from the Architect, he shall bear all costs arising in correcting any deficiencies that should arise.

B. Equipment and materials shall be delivered to the site and stored in original sealed containers, suitably sheltered from the elements, but readily accessible for inspection by the Architect until installed. All items subject to moisture damage such as controls shall be stored in dry, heated spaces. Equipment such as switchgear with heater elements installed shall have the heater elements energized after the equipment is received by the Electrical Contractor.

C. The Electrical Contractor shall be responsible to fully inspect all shipments for damage and report damage to the manufacturer and the Architect.

D. Equipment shall be tightly covered and protected against dirt, water, and chemical or mechanical injury and theft. At the completion of the work, equipment and materials shall be cleaned and polished thoroughly and turned over to the Owner in a condition satisfactory to the Architect. Damage or defects that develop before acceptance of the work shall be made good at the Electrical Contractor's expense.

E. The Electrical Contractor shall make necessary field measurements to ascertain space requirements, for equipment and connections to be provided under his respective Trade

and shall furnish and install such sizes and shapes of equipment to allow for the final installation to conform to the drawings and specifications.

F. The low voltage distribution equipment shall be split into shipping groups for handling as directed by the Electrical Contractor or as the manufacturer's limitations dictate. Shipping groups shall be designed to be shipped by truck, rail or ship. Shipping groups shall be bolted to skids. Accessories shall be packaged and shipped separately. Each switchgear shipping group shall be equipped with lifting eyes for handling solely by crane.

G. The low voltage distribution equipment being stored prior to installation shall be stored so as to maintain the equipment in a clean and dry condition. If stored outdoors, indoor gear shall be covered and heated, and outdoor gear shall be heated.

1.9 ACCEPTABLE MANUFACTURERS

A. Cutler-Hammer

B. General Electric

C. Square D

1.10 SELECTIVE COORDINATION

A. The emergency distribution system, the elevator distribution system and the fire pump distribution system shall be selectively coordinated to meet the requirements of the National Electrical Code, Articles, 620.62, 700.27, and 701.27 and NFPA 20.

B. For system reliability, the entire normal distribution system shall be coordinated down to 0.10 seconds to the extent practicable.

C. The switchgear manufacturer shall be responsible to select appropriate overcurrent protective device, fuse and/or circuit breaker frame, sensor and trip sizes for all devices upstream of other devices for a completely coordinated system. Refer to specification 26 0570 for additional information.

1.11 WITHSTAND AND INTERRUPTING RATINGS OF ELECTRICAL COMPONENTS

A. Calculated available 3 phase and single phase to ground short circuit currents indicated on the drawings are provided for information only to assist in the selection of withstand and interrupting ratings and coordination of devices and equipment.

B. Prior to submission of shop drawings, the manufacturer shall perform short circuit calculations in accordance with specification section 26 0570 to determine actual available 3 phase and single line to ground short circuit current at each component in the system based on actual equipment, feeder lengths, impedances, etc. of the equipment proposed for this project. Failure to perform the study prior to submission of shop drawings shall not relieve the manufacturer from providing devices that meet the requirements of the final study report.

C. Each component shall be UL listed and labeled and shall be fully rated to withstand and interrupt calculated available 3 phase and single phase to ground short circuit current levels. Series ratings will not be acceptable.

1.12 SUBMITTALS

A. Prepare and submit shop drawings in accordance with the requirements hereinbefore specified, and with Section 01 3300 – Submittal Procedures in the manner described therein, modified as noted hereinafter.

B. All shop drawings shall have clearly marked the appropriate specification number of drawing designation, for identification of the submittal.

C. Disposition of shop drawings shall not relieve the Electrical Contractor from the responsibility for deviations from drawing or specifications, unless he has submitted in writing a letter itemizing or calling attention to such deviations at time of submission and secured written approval from the Engineer, nor shall such disposition of shop drawings relieve the Electrical Contractor from responsibility for errors in shop drawings or schedules.

D. Power system study report shall be submitted in advance, or in conjunction with low voltage distribution equipment shop drawings. If formal completion of the studies may cause delay in equipment manufacture, approval from the Architect may be requested to select device ratings and characteristics based on a preliminary submittal of the study using available data and reasonable assumptions. Any changes required as a result of the final power system study shall be made at no additional cost to the Owner

E. Shop drawings shall include, but shall not be limited to, the following:

1. Busway.
2. Enclosed circuit breakers.
3. Fuses
4. Low voltage distribution switchboards, group mounted.
5. Motor controllers - magnetic starters.
6. Motor disconnect devices.
7. Panelboards - branch circuit and distribution. (100A-1200A)
8. Power system studies and trip settings.
9. Safety switches.
10. Distribution switchboards (1600-3000A).
11. Transformers - dry type.

F. The following equipment rooms, drawn at ¼”=1’-0” scale, with all the electrical equipment laid out including dimensions, Code clearances, etc., shall be submitted with the equipment shop drawings. Acceptance of these shop drawings shall be obtained prior to installation of feeder conduits:

1. Main electric room

2. Main emergency electric room

3. All satellite normal and emergency electrical rooms and closets.

Notes:

Equipment shop drawings will not be reviewed without the room/equipment layouts.

The Architect/Engineer reserve the right to rearrange equipment in electrical equipment rooms or spaces once final equipment dimensional information is known and prior to installation of the equipment. Install equipment in the final location selected by the Architect/Engineer at no additional cost to the Owner.

G. The switchgear manufacturer shall submit the following information with each submittal:

1. Master drawing index.

2. Front view elevation.

3. Floor plan.

4. Top view.

5. Single line.

6. Control schematics and wiring diagrams.

7. Nameplate schedule.

8. Component list/bill of material.

9. Conduit entry/exit locations.

10. Assembly ratings including:

    a. Short circuit rating.
    b. Information regarding series short circuit ratings.
    c. Voltage.
    d. Continuous current.
    e. Basic Impulse level for equipment over 600 volts.
    f. KVA.

11. Major component ratings including:

    a. Voltage.
    b. Continuous current.
    c. Interrupting ratings.

12. Cable terminal sizes.

13. Connection details between close-coupled assemblies.

14. Composite floor plan of close-coupled assemblies.

15. Impedance for transformers.

16. Manufacturer's catalog data sheets.

17. Test reports.

18. The following additional information shall be submitted to the Engineer:

    a. Busway connection.
    b. Key interlock scheme drawing and sequence of operations.

19. The following product information shall be submitted:

    a. Descriptive bulletins.
    b. Product sheets.

1.13 CLOSEOUT SUBMITTALS AND O & M MANUALS

A. The following information shall be submitted for record purposes, in a binder, prior to final payment:

1. Final as-built drawings and information for items listed above.

2. Operation and maintenance manuals with the following information:

    a. Instruction books and/or instruction leaflets
    b. Recommended renewal parts

3. Wiring diagrams.

4. Certified production test reports.

5. Installation information.

6. Seismic certification and equipment anchorage details.

PART 2 – PRODUCTS

2.1 BUSWAY - LOW-VOLTAGE

A. Ratings

1. The busway shall be 3 phase, 4 wire, with voltage and current ratings as indicated on the Contract Drawings.

B. Construction

1. The busway housing shall be totally enclosed and non-ventilated, and shall be available in three (3) forms: outdoor feeder, indoor feeder, and indoor plug-in. They shall be interchangeably (in the same rating) without adapters or special splice plates. One set of fittings, elbows, tees, flanges, etc. shall be provided for use with both the plug-in and feeder types of busway giving added flexibility to the system.

2. The busway housing shall be capable of being mounted flatwise, edgewise, or vertical positions without being derated. The busway shall consist of standard 10 foot sections with special sections and fittings provided to suit the installation. Horizontal runs shall be suitable for hanging on 10 foot maximum support centers. On vertical runs, one adjustable vertical hanger per floor shall be supplied.

C. Bus

1. Bus bars shall be fabricated from high strength, 98% conductivity copper and suitably plated at all electrical contact surfaces.

2. Bus bars shall be insulated over their entire length, except at joints and contact surfaces, with an Underwriters Laboratories listed insulating material consisting of Epoxy applied by fluidized bed process. Tape or heat-shrink sleeve insulation, or any other method of insulation which can allow air-gaps or insulation breakdown, is not acceptable.

3. Bus bars shall be arranged “A”, “B”, “C”, from front-to-back and/or top-to-bottom and/or left-to-right as viewed from the front of the equipment.

4. The busway shall be capable of carrying rated current continuously without exceeding a temperature rise of 55 degrees C based on a 40 degrees C ambient.

5. A ground bus shall be furnished and shall consist of a 50% rated housing ground bus.

6. A neutral bus shall be furnished and shall consist of 100% rated bus of the same composition as the phase bus.

7. Each busway section shall be furnished complete with joint hardware and covers. The joints for 600 through 5,000 amperes shall be of the single-bolt, non-rotating design and shall permit safe, practical testing of bolt tightness without de-energizing the busway. Access to only one side of the duct shall be required for tightening or inspection of the joint. Any one section of the duct shall be removable without disturbing adjacent sections. Joint covers shall be provided with captive hardware.

D. Housing

1. The indoor busway housing shall be constructed of extruded aluminum or shall meet NEC Gauge Steel Specifications with a suitable UL approved protective finish consisting of a iron phosphate pretreatment inside and out, and a medium-light gray ANSI 49 or 61 baked acrylic enamel applied by the electrostatic process.

2. Housing shall be provided with identification every ten feet along its length indicating designation indicated on the electrical drawings.

E. Plug-in Busway

1. Where indicated on the drawings, busway shall be of the plug-in type with provisions for four (4), usable plug-in openings per floor with a suitable outlet cover provided for each. Plug-in covers shall prohibit dirt and debris from entering plug-in openings in the busway.

F. Plug-in Units

1. Plug-in units shall be factory pre-assembled, and shall be of the types and ratings indicated on the plans and specifications.

2. Plug-in units shall be mechanically interlocked with the busway housing to prevent their installation or removal while the switch is in the ON position. The enclosure of any plug-in unit shall make positive ground connection to the duct housing before the stabs make contact with the bus bars. All plug-in units shall be equipped with a defeatable interlock to prevent the cover from being opened while the switch is in the ON position and to prevent accidental closing of the switch while cover is open. The plugs shall be provided with a means for padlocking the cover closed and padlocking the disconnect device in the OFF position.

3. The operating handle and mechanism of the plug-in unit shall remain in control of the disconnect device at all times permitting its easy operation from the floor by means of a hookstick or chain. Plug-in units shall be equipped with a means for direct positioning or hanging, so that the weight is borne by the duct before the stabs make contact with the bus bars. For safety reasons, no projections shall extend into the busway housing other than the plug-in stabs. All plug-in units shall be interchangeable without alteration or modification of plug-in duct.

4. Plug-in units shall be circuit breaker type with integral time delay/thermal trip protection in one assembly and shall meet all requirements of UL Standard 489.

2.2 ENCLOSED CIRCUIT BREAKERS

A. Molded Case Circuit Breakers

1. Molded case circuit breakers shall provide circuit overcurrent protection with inverse time and instantaneous tripping characteristics.

2. Circuit breakers shall be operated by a toggle-type handle and shall have a quick-make, quick-break over-center switching mechanism that is mechanically trip-free. Automatic tripping of the breaker shall be clearly indicated by the handle position. Contacts shall be non-welding silver alloy, and arc extinction shall be accomplished by means of arc chutes. A push-to-trip button on the front of the circuit breaker shall provide a local manual means to exercise the trip mechanism.

3. Circuit breakers 600 ampere frame and below shall be of the thermal-magnetic type with inverse time-current characteristics or shall be of the solid state type.

4. Circuit breakers over 600 ampere frame shall be microprocessor-based with true RMS sensing trip units.

   a. Each molded case circuit breaker microprocessor-based tripping system shall consist of three current sensors, a microprocessor, and a flux-transfer shunt trip. True RMS sensing circuit protection shall be achieved by analyzing the secondary current signals received from the circuit breaker current sensors and initiating trip signals to the circuit breaker trip actuators when predetermined trip levels and time delay settings are reached.

   b. Interchangeable rating plugs shall establish the continuous trip ratings of each circuit breaker. Rating plugs shall be interlocked so they are not interchangeable between frames, and interlocked such that a breaker cannot be closed and latched with the rating plug removed.

   c. The microprocessor-based trip system shall have thermal memory capabilities to prevent the breaker from being reset following an overload condition until after a preset time delay.

   d. Molded Case Circuit Breaker Trip Units

      1) System coordination shall be provided by the following microprocessor-based time-current curve shaping adjustments:

         a) Adjustable long time pick-up and delay

         b) Adjustable short time pick-up and delay, with selective curve shaping

         c) Adjustable instantaneous pick-up

B. Accessories

1. Provide shunt trips, bell alarms, and auxiliary switches as shown on the contract drawings.

C. Enclosures

1. All enclosed circuit breakers shall have NEMA 1 general purpose enclosures unless otherwise noted. Provide enclosures suitable for locations as indicated on the drawings and as described below.

    a. NEMA 1 surface or flush-mounted general purpose enclosures primarily intended for indoor use.

    b. NEMA 12 dust-tight enclosures intended for indoor use primarily to provide protection against circulating dust, falling dirt, and dripping non-corrosive liquids.

    c. NEMA 3R raintight enclosures intended for outdoor use primarily to provide protection against rain, sleet, and damage from external ice formation.

    d. NEMA 4 watertight stainless steel intended for indoor or outdoor use primarily to provide protection against windblown dust and rain, splashing rain, hose-directed water, and damage from external ice formation.

    e. NEMA 7, Class I, Group D hazardous location cast aluminum intended for indoor use in locations classified as Class I, Group D as defined in the National Electrical Code.

    f. NEMA 9, Class II, Groups E, F, G hazardous location cast aluminum intended for indoor use in locations classified as Class II, Groups E, F, and G as defined in the National Electrical Code.

2. All enclosed circuit breakers shall have metal nameplates, front cover mounted, that contain a permanent record of catalog number and maximum rating. Provide handle mechanisms that are padlockable in the "OFF" position.

2.3 FIRE PUMP CIRCUIT BREAKER

A. Fire Pump Circuit Breakers

1. Fire pump circuit breakers shall be molded case circuit breakers and shall provide circuit overcurrent protection with inverse time and instantaneous tripping characteristics.

2. Circuit breakers shall be operated by a toggle-type handle and shall have a quick-make, quick-break over-center switching mechanism that is mechanically trip-free. Automatic tripping of the breaker shall be clearly indicated by the handle position. Contacts shall be non-welding silver alloy, and arc extinction shall be accomplished by means of arc chutes. A push-to-trip button on the front of the circuit breaker shall provide a local manual means to exercise the trip mechanism.

3. Provide undersized and/or oversized lugs and/or adapters for incoming and outgoing conductors to accommodate conductors size indicated on the drawings.

4. Circuit breakers 600 ampere frame and below shall be of the thermal-magnetic type with inverse time-current characteristics or shall be of the solid state type.

5. Circuit breakers over 600 ampere frame shall be microprocessor-based with true RMS sensing trip units.

   a. Each molded case circuit breaker microprocessor-based tripping system shall consist of three current sensors, a microprocessor, and a flux-transfer shunt trip. True RMS sensing circuit protection shall be achieved by analyzing the secondary current signals received from the circuit breaker current sensors and initiating trip signals to the circuit breaker trip actuators when predetermined trip levels and time delay settings are reached.

   b. Interchangeable rating plugs shall establish the continuous trip ratings of each circuit breaker. Rating plugs shall be interlocked so they are not interchangeable between frames, and interlocked such that a breaker cannot be closed and latched with the rating plug removed.

   c. The microprocessor-based trip system shall have thermal memory capabilities to prevent the breaker from being reset following an overload condition until after a preset time delay.

   d. Molded Case Circuit Breaker Trip Units

      1) System coordination shall be provided by the following microprocessor-based time-current curve shaping adjustments:

         a) Adjustable long time pick-up and delay

         b) Adjustable short time pick-up and delay, with selective curve shaping

         c) Adjustable instantaneous pick-up

      2) The trip unit shall have ground fault indication only.

      3) The trip unit shall have an LCD or LED display.

      4) Trip targets indicating the operation of a trip and the function causing it shall be provided via the display.

      5) Trip units shall be able to perform the following metering with access to values via the trip unit display.

         a) Amperes
         b) Voltage
         c) Watts
         d) Volt-amperes
         e) Watt-hours

f) Frequency

6) The trip unit shall have communications capabilities compatible with Cutler Hammer IMPAC power management system, General Electric PMCS 5.0 power management system, Square D Powerlogic power management system, Siemens Access power management system.

6. Fire pump circuit breaker shall be UL listed for application at 100% of its continuous ampere rating in the enclosure.

7. Provide a Service Entrance label on fire pump circuit breaker.

B. Accessories

1. Provide a normally open and normally closed auxiliary contact for connection to the fire alarm system that will sound a supervisory signal when the breaker is in the open position.

2. Provide shunt trips, bell alarms, and auxiliary switches as shown on the contract drawings.

C. Enclosures

1. Fire pump circuit breakers shall have NEMA 1 general purpose enclosures unless otherwise noted. Provide enclosures suitable for locations as indicated on the drawings and as described below.

a. NEMA 1 surface or flush-mounted general purpose enclosures primarily intended for indoor use.

b. NEMA 12 dust-tight enclosures intended for indoor use primarily to provide protection against circulating dust, falling dirt, and dripping non-corrosive liquids.

c. NEMA 3R raintight enclosures intended for outdoor use primarily to provide protection against rain, sleet, and damage from external ice formation.

d. NEMA 4 watertight stainless steel intended for indoor or outdoor use primarily to provide protection against windblown dust and rain, splashing rain, hose-directed water, and damage from external ice formation.

e. NEMA 7, Class I, Group D hazardous location cast aluminum intended for indoor use in locations classified as Class I, Group D as defined in the National Electrical Code.

f. NEMA 9, Class II, Groups E, F, G hazardous location cast aluminum intended for indoor use in locations classified as Class II, Groups E, F, and G as defined in the National Electrical Code.

2. The fire pump circuit breakers shall have a metal nameplate, front cover mounted, that contain a permanent record of catalog number and maximum rating.

3. The fire pump circuit breaker shall also have a permanent nameplate that reads “FIRE PUMP DISCONNECTING MEANS”. The nameplate shall be red with white letters 1” in height, all capital letters. The nameplate shall be visible without opening doors or covers

4. Provide handle mechanisms that are padlockable in the "CLOSED" position.

2.4 FUSES

A. All fuses shall be rated for proper voltage in which they are applied. Interrupting ratings shall be greater than the short circuit current available at the terminals of the switch.

B. Fuse Types

1. Fuses for motor branch circuits shall be time delay Type J.

2. Fuses for equipment other than motor loads shall be general fast acting RK-5.

3. Medium voltage fuses for primary protection for transformers shall be as specified in switchgear specifications.

4. Control power transformers for motor controller circuits shall be as recommended by motor starter and motor control center manufacturer.

5. Fuses for motors shall be sized at 250% of the motor FLA

6. Fuses for non-motor loads shall be sized at 125% of rated FLA of equipment served.

7. Fuses for elevator lifts shall be dual element type and sized in accordance with elevator manufacturers recommendations.

C. Spare Fuses

1. Provide spare fuses in the amount of 20% (not less than three (3) nor more than nine (9) of all sizes and types).

2. Spare fuses shall include general purpose fuses, motor fuses, and control fuses used in motor control centers, starters, etc.

3. A complete list and quantity of spare fuses shall be submitted with record drawings for review.

D. Spare Fuse Cabinet

1. Furnish and install a heavy duty steel cabinet 2'-0" wide by 3'-0" high by 1'-0" deep with shelves.

2. Cabinet shall be provided with hinged lockage cabinet door.

E. Manufacturers

1. Gould Shawmut
2. Bussman
3. CEFCO

2.5 MOTOR CONTROLLERS – MAGNETIC STARTERS

A. Wiring

1. Wiring shall be NEMA Class I, Type B.

2. All control wiring internal to the assembly shall be done at the factory by the manufacturer. Field control wiring shall terminate at pull-apart terminal blocks in the wiring gutter.

3. The manufacturer shall submit wiring diagram(s) for each type of starter assembly. Prior to submission for approval by the Engineer, the Electrical Contractor shall submit these drawings to the HVAC/Automatic Temperature Control (ATC) Subcontractors to determine suitability in their system(s). Following this review, the Electrical Contractor may submit the drawings to the Engineer for review. The submittal shall clearly indicate that the HVAC/ATC Subcontractors have reviewed the wiring diagrams and have accepted them for use with their systems.

B. Combination Motor Controllers

1. Combination starter units through NEMA size 3 shall be full voltage, non-reversing. Combination starters NEMA size 4 and above shall be auto-transformer type reduced voltage, closed transition starters with starting taps at 65%, 80% and 90% of full voltage. All accessories for reduced voltage starters shall be the same as full voltage starters. All starters shall utilize magnetic only breakers.

2. All 480 volt starters sizes shall be as follows:

a.	1/2 to 10 HP:	NEMA Size 1
b.	15 to 25 HP:	NEMA Size 2
c.	30 to 50 HP:	NEMA Size 3
d.	60 to 100 HP:	NEMA Size 4 - Reduced Voltage
e.	125 to 200 HP:	NEMA Size 5 - Reduced Voltage

3. All 208 volt starters sizes shall be as follows:

a.	1/2 to 7½ HP:	NEMA Size 1
b.	10 HP:	NEMA Size 2
c.	15 to 25 HP:	NEMA Size 3
d.	30 to 40 HP:	NEMA Size 4 - Reduced Voltage
e.	50 to 75 HP:	NEMA Size 5 - Reduced Voltage

4. All starters shall utilize magnetic only breakers/motor circuit protectors and shall be sized by the equipment manufacturer based on the motor horsepower size indicated on the accepted mechanical equipment shop drawings (also refer to nameplate rating of motors). The manufacturer shall replace, at no cost to the Owner any breaker that is not coordinating with the motor starter.

5. Thermal magnetic devices with solid state overload devices may be provided to obtain specified short circuit rating. If the overloads require power, redundant power supplies shall be provided.

6. The magnetic only breaker shall provide adjustable magnetic protection up to, but not over 1,700% motor nameplate full load current to comply with NEC requirements. All magnetic only breaker/combination starter units shall have a "tripped" position on the unit disconnect and a push-to-test button on the magnetic only breaker.

7. For all 480 volt normal power motors, provide ground fault protection, with pick-up of approximately 20% of device rating for all starters.

8. Line starters shall be electrically operated, electrically held, three pole assemblies with arc extinguishing characteristics and shall have silver-to-silver renewable contacts. They shall have provisions for a total of five normally open or five normally closed auxiliary contacts wired to a terminal block with two normally open and two normally closed unused spare auxiliary contacts.

9. The overload relay assembly shall be of the thermal bimetallic ambient compensated type. Overload relays shall be reset from outside the enclosure by means of an insulated button. Overload heaters for each motor shall be determined by the actual nameplate ampere rating of the motor. The Electrical Contractor shall obtain this information from the final accepted shop drawings for each motor to be served and shall provide this information to the motor control center manufacturer. The overload relay shall have a built-in push-to-test button, electrically isolated normally open - normally closed contacts and single phase protection.

10. Each starter shall be equipped with the following:

    a. A primary and secondary fused control power transformer sized 50 VA above the minimum rating.

    b. Two LED indicating lights, red for run; green for stop.

c. A mechanical H-O-A selector switch. Electronic or touch pad type H-O-A switches will not be acceptable.

d. Device panel with space to accommodate five (5) oil-tight, pilot-control devices or indicating ammeters, voltmeters, or elapsed time meters.

11. Two-speed, two-winding starters shall be provided for two-speed, two-winding motors. Starters shall be provided with overcurrent protection, sized for each speed. Two (2) motor circuit protectors per starter shall be provided. In addition, three (3) pilot lights ("High", "Low", "Off") and a 4-position selector switch (High/Low/Off/Automatic) shall be provided. Refer to HVAC schedule for quantities. Single short circuit protective device for both speeds will <u>not be acceptable</u>.

12. Two-speed, two-winding, reversing starters shall be provided for two-speed, two-winding motors. Starter shall be provided with overload protection in each speed. Two (2) motor circuit protectors per starter, one sized for each speed shall be provided. In addition, five (5) pilot light (Forward, Reverse, High, Low, Off) and three (3) selector switches ([1] 3 position [Local, Off, Auto]) ([1] 2 position [Forward, Reverse]), and ([1] 2-position [High, Low]) shall be provided. Two-speed and reversing contactors shall be mechanically and electrically interlocked. Each contactor (Forward, Reverse, High, Low) shall be provided with two (2) <u>spare</u> normally open contacts and two (2) <u>spare</u> normally closed contacts.

13. For all motors 3.0 HP and above, provide a combination current transformer with an and transducer with a 4-20 milliampere analog output mounted on Phase B of output of starter. Wire current transformer /transducer to shorting time terminal board for remote use by HVAC Subcontractor. Provide power supply for transducer as required.

14. No IEC control devices shall be used.

15. Time delay relays shall be provided as follows:

    a. All motors 15 HP and above to delay starting of motor upon energization.

    b. All two-speed motors for delay between "high" and "low" speeds to allow coastdown of motor.

    c. All reversing starters between forward and reverse and between reverse and forward to allow motor to stop.

    d. All timers shall be adjustable between 1 and 60 seconds continuous. Final adjustment shall be made by the Electrical Contractor to coordinate with system conditions. List of settings shall be provided to the Owner and Electrical Engineer for review.

C. Manual Starters

1. Manual starters shall be provided with thermal overload protection in each phase, quick-break operating mechanism, silver contacts, pressure type terminal contacts, bimetallic type overload device, H/O/A selector switch, etc.

2.6 MOTOR DISCONNECT DEVICES

A. Ratings

1. All motor disconnect devices shall be heavy duty type

2. Motors under 15 HP

   a. 30 to 60 Amperes.
   b. 250 Volts AC, DC; 600 Volts AC.
   c. 2, 3 or 6 Poles.
   d. Non-Fusible
   e. Copper-Aluminum Terminals.

3. Motors 15 HP and above

   a. 30 to 1,200 Amperes.
   b. 600 Volts AC.
   c. 3 or 6 Poles.
   d. Fusible
   e. Copper-Aluminum Terminals.

B. Enclosures

1. Types

   a. NEMA 1 General Purpose.
   b. NEMA 3R Raintight.
   c. NEMA 4 Watertight Stainless Steel.
   d. NEMA 12 Dust-tight and Oil-tight Special Industry.

2. Switches shall have NEMA 1 general purpose enclosures or enclosure as indicated on the drawings. NEMA Type 3R enclosures shall be used where the disconnect switch is exposed to the weather or in wet areas.

C. Construction

1. All switches shall have metal nameplates, front cover mounted, that contain a permanent record of switch type, catalog number and Hp ratings (with both standard and time delay fuses); handle whose position is easily recognizable and is padlockable in the "OFF" position; visible blades; reinforced fuse clips; nonteasible, positive, quick-make quick-break mechanisms; and switch assembly plus operating handle as an integral part of the enclosure base.

2. All switches shall be Underwriters Laboratories, Inc. listed, HP rated, meet Federal Specification WS-865c, and NEMA Specifications KSI-1975.

3. All switches shall have defeatable door interlocks that prevent the door from opening when the operating handle is in the "ON" position.

4. Heavy-duty switches shall have line terminal shields.

5. All fused switches shall have Class J time delay fuses.

D. Special Configurations

1. Where motor disconnect devices are installed between variable speed drives and their associated motor, an interlock switch shall be provided on the motor disconnect devices and 2#14-1/2"C. shall run from the interlock switch to the associated variable speed drive to turn off the drive while the motor disconnect switch is in the off position.

2. All two speed motors shall be provided with 6 pole motor disconnect devices.

3. For all motors under 1/2 HP, furnish and install a manual starting thermal type switch with pilot light as a disconnecting means, unless otherwise indicated on the drawings. These thermal switches shall be toggle operated and shall be rated 1 HP, motor overload protection shall be provided by means of a bimetallic type thermal relay in combination with interchangeable heaters. Heaters shall be installed without removing the starter from the housing or disturbing the wiring. Toggle shall be trip free. Thermal switches shall be furnished in a NEMA, Type 1 enclosure in mechanical and utility areas and flush in walls with stainless steel plates in Architecturally finished areas. All heaters shall be sized per the horsepower of the motor code letter. Coordinate with HVAC and Plumbing Trades.

4. All motors/pumps/air handling units shall be provided with proper size/rating motor disconnect device whether indicated on drawings or not to comply with NEC. Install and connect motor disconnect devices furnished by other Trades.

E. General

1. All power wiring shall be furnished and installed between disconnect switches, control cabinets, contactors and motor terminals required by equipment furnished by other Trades.

2. All motor disconnect devices shown on the drawings shall be furnished and installed by the Electrical Contractor.

2.7 PANELBOARDS - BRANCH CIRCUIT AND DISTRIBUTION (100A – 1,200A)

A. Ratings

1. Panelboards shall be 240 volt or 600 volt class suitable for operation on a three phase, 60 Hertz system. The panelboard phase, voltage and current ratings shall be as indicated on the Contract Drawings.

B. Construction

1. Interiors shall be completely factory assembled with bolt-on devices. They shall be designed such that switching and protective devices can be replaced without disturbing adjacent units and without removing the main bus connectors.

2. Trims for distribution, lighting and appliance panelboards shall be supplied with a door-in-door trim. The inner door shall be a hinged door over all circuit breaker handles. The outer door shall be the entire trim with a piano hinge to expose wiring gutters. Inner door in panelboard trim shall not uncover any live parts. Inner doors shall have a semiflush cylinder lock and catch assembly. Doors over 48 inches in height shall have auxiliary fasteners. Switching device handles in distribution panelboards shall be accessible.

3. Surface trims shall be same height and width as box. Flush trims shall overlap the box by 3/4 of an inch on all sides.

4. Where double tub panels are indicated on the drawings, each tub shall contain the same number of breakers and spaces. Box and trim sizes shall be identical.

5. Where auxiliary gutters are indicated for feed through lugs, a separate gutter shall be attached to the panelboard, sized as required based on conductor size. The auxiliary gutter shall contain a separate cover and the panel shall contain a door-in-door trim.

6. A directory card with a clear plastic cover shall be supplied and mounted on the inside of each door.

7. All locks shall be keyed alike.

C. Bus

1. Main bus bars shall be copper sized in accordance with UL standards to limit temperature rise on any current carrying part to a maximum of 65 degrees C above an ambient of 40 degrees C maximum.

2. Bus bars shall be arranged “A”, “B”, “C”, from front-to-back and/or top-to-bottom and/or left-to-right as viewed from the front of the equipment.

3. A bolted copper ground bus shall be included in all panels.

4. In addition to the bolted ground bus, an isolated copper ground bus shall be included in panels as indicated on the drawings.

5. Bus bar taps for panels with single pole branches shall be arranged for sequence phasing of the branch circuit devices.

6. Neutral Bus

a. Full-size insulated copper neutral bars shall be included for panelboards shown with neutral.

b. Neutral busing shall have a suitable lug for each outgoing feeder requiring a neutral connection.

c. For panels 600 amperes and below, fed directly via "K" factor transformers, neutral bus shall be 200% of phase busses.

D. Power Distribution Panelboards, Circuit Breaker Type

1. Molded case circuit breakers shall provide circuit overcurrent protection with inverse time and instantaneous tripping characteristics.

2. Circuit breakers shall be bolt-on, operated by a toggle-type handle and shall have a quick-make, quick-break over-center switching mechanism that is mechanically trip-free. Automatic tripping of the breaker shall be clearly indicated by the handle position. Contacts shall be nonwelding silver alloy, and arc extinction shall be accomplished by means of arc chutes.

3. Circuit breakers 250 ampere frame and below may be of the thermal-magnetic type with inverse time-current characteristics or shall be microprocessor based, as specified below.

4. Circuit breakers over 250 ampere frame shall be microprocessor-based with true RMS sensing trip units.

a. Each molded case circuit breaker microprocessor-based tripping system shall consist of three current sensors, a microprocessor, and a flux-transfer shunt trip. True RMS sensing circuit protection shall be achieved by analyzing the secondary current signals received from the circuit breaker current sensors and initiating trip signals to the circuit breaker trip actuators when predetermined trip levels and time delay settings are reached.

b. Interchangeable rating plugs shall establish the continuous trip ratings of each circuit breaker. Rating plugs shall be interlocked so they are not interchangeable between frames, and interlocked such that a breaker cannot be closed and latched with the rating plug removed.

c. The microprocessor-based trip system shall have thermal memory capabilities to prevent the breaker from being reset following an overload condition until after a preset time delay.

d. Molded Case Circuit Breaker Trip Units

1) System coordination shall be provided by the following microprocessor-based time-current curve shaping adjustments:

a) Adjustable long time pick-up and delay

b) Adjustable short time pick-up and delay, with selective curve shaping

c) Adjustable instantaneous pick-up

E. Branch Circuit Panelboards

1. Bolt-on type, heavy-duty, quick-make, quick-break, single- and multi-pole circuit breakers of the types specified herein, shall be provided for each circuit with toggle handles that indicate when unit has tripped.

2. Circuit breakers shall be thermal magnetic type with common type handle for all multiple pole circuit breakers. Circuit breakers shall be minimum 100 ampere frame and through 100 ampere trip sizes shall take up the same pole spacing. 20 ampere, single pole circuit breakers shall be UL listed as type SWD for lighting circuits.

3. Circuit breaker handle locks shall be provided for all circuits that supply exit signs, emergency lights, energy management and control system (EMCS) panels and fire alarm panels.

F. Enclosure

1. Enclosures shall be at least 20 inches wide and 5 3/4 inches deep made from galvanized steel. Provide minimum gutter space in accordance with the National Electric Code. Where feeder cables supplying the mains of a panel are carried through its box to supply other electrical equipment, an auxiliary gutter shall be provided, sized to include the additional required wiring space. At least four interior mounting studs with adjustable nuts shall be provided.

2. Enclosures shall be provided with removable blank ends.

3. All panelboards shall have NEMA 1 general purpose enclosures unless otherwise noted. Enclosure types

G. Nameplates

1. Each panel shall have an engraved nameplate for each section. Engraved nameplate shall include panel designation, voltage, phase, ampere rating of upstream feeder breaker or main circuit breaker, and designation of upstream panel or other device similar to:

PANEL L42
100 AMPERE, 480/277 VOLT, 3 PHASE, 4 WIRE
FED FROM PANEL D42

2. Where panel is fed directly from an upstream transformer, nameplate shall be similar to:

3. Nameplates shall be laminated plastic, black characters on white background, and secured with screws. Characters shall be 3/16 inch high, minimum.

4. Panelboards shall be provided with typewritten directories with plastic protector indicating circuit numbers, equipment served and room number of the area served. All room numbers used for directory cards shall be the room numbers assigned by the Owner and not necessarily room numbers indicated on the drawings. Coordinate all room numbers with Architect prior to final printing of directory cards. Directory cards shall be edited and maintained during the course of construction to keep an accurate, up to date record of each feeder or branch circuit.

H. Finish

1. Surfaces of the trim assembly shall be properly cleaned, primed, and a finish coat of gray ANSI 49 or 61 paint applied.

2.8 SAFETY SWITCHES

A. Ratings

1. All safety switches shall be heavy duty type.

2. Safety Switches 60 amperes and below

a. 30 to 60 Amperes.
b. 250 Volts AC, DC; 600 Volts AC.
c. 2, 3 or 6 Poles.
d. Fusible or Non-Fusible
e. Copper-Aluminum Terminals.

3. Safety Switches over 60 amperes

a. 100 to 1,200 Amperes.
b. 600 Volts AC.
c. 3 or 6 Poles.
d. Fusible
e. Copper-Aluminum Terminals.

B. Enclosures

1. Types

a. NEMA 1 General Purpose.
b. NEMA 3R Raintight.
c. NEMA 4 Watertight Stainless Steel.

d. NEMA 12 Dust-tight and Oil-tight Special Industry.

2. All interior safety switches shall have NEMA 1 general purpose enclosures. All exterior safety switches shall have NEMA 3R raintight enclosures unless otherwise noted.

C. All switches shall have metal nameplates, front cover mounted, that contain a permanent record of switch type, catalog number and Hp ratings (with both standard and time delay fuses); handle whose position is easily recognizable and is padlockable in the “OFF” position; visible blades; reinforced fuse clips; nonteasible, positive, quick-make quick-break mechanisms; and switch assembly plus operating handle as an integral part of the enclosure base.

D. All switches shall be Underwriters Laboratories, Inc. listed, HP rated, meet Federal Specification WS-865c, and NEMA Specifications KSI-1975.

E. All switches shall have defeatable door interlocks that prevent the door from opening when the operating handle is in the "ON" position.

F. Switches shall have line terminal shields.

G. All fused switches shall have Class J time delay fuses.

2.10 DISTRIBUTION SWITCHBOARDS (1,600A – 3,000A)

B. Ratings

1. Switchboards shall be 240 volt or 600 volt class suitable for operation on a three phase, 60 Hertz system. The switchboard phase, voltage and current ratings shall be as indicated on the Contract Drawings.

C. Construction

1. Switchboard shall consist of the required number of vertical sections bolted together to form a rigid assembly. The sides and rear shall be covered with removable bolt-on covers. All edges of front covers or hinged front panels shall be formed. Provide adequate ventilation within the enclosure.

2. All sections of the switchboard shall be rear aligned. All protective devices shall be group mounted. Devices shall be front removable and load connections front accessible enabling switchboard to be mounted against a wall.

3. The assembly shall be provided with adequate lifting means.

D. Bus

1. All bus bars shall be copper. Main horizontal bus bars shall be mounted with all three phases arranged in the same vertical plane. Bus sizing shall be based on NEMA standard temperature rise criteria of 65 degrees C over a 40 degrees C ambient (outside the enclosure).

2. Bus bars shall be arranged “A”, “B”, “C”, from front-to-back and/or top-to-bottom and/or left-to-right as viewed from the front of the equipment.

3. A copper ground bus (minimum 1/4 X 2 inch) shall be furnished firmly secured to each vertical section structure and shall extend the entire length of the switchboard.

4. All hardware used on conductors shall be high-tensile strength and zinc plated. All bus joints shall be provided with conical spring type washers.

E. Wiring/Terminations

1. Small wiring, necessary fuse blocks and terminal blocks within the switchboard shall be furnished as required. Control components mounted within the assembly, such as fuse blocks, relays, pushbuttons, switches, etc., shall be suitably marked for identification corresponding to appropriate designations on manufacturer's wiring diagrams.

2. Mechanical type terminals shall be provided for all line and load terminations suitable for copper or aluminum cable rated for 75 degrees C of the size as indicated on the drawings.

3. Lugs shall be provided in the incoming line section for connection of the main grounding conductor. Additional lugs for connection of other grounding conductors shall be provided.

4. All control wire shall be type SIS, bundled and secured with nylon ties. Insulated locking spade terminals shall be provided for all control connections, except where saddle type terminals are provided integral to a device. All current transformer secondary leads shall first be connected to conveniently accessible short circuit terminal blocks before connecting to any other device. All groups of control wires leaving the switchboard shall be provided with terminals blocks with suitable numbering strips. Provide wire markers at each end of all control wiring.

F. Molded Case Circuit Breakers

1. Molded case circuit breakers shall provide circuit overcurrent protection with inverse time and instantaneous tripping characteristics.

2. Circuit breakers shall be bolt-on, operated by a toggle-type handle and shall have a quick-make, quick-break over-center switching mechanism that is mechanically trip-free. Automatic tripping of the breaker shall be clearly indicated by the handle position. Contacts shall be nonwelding silver alloy, and arc extinction shall be accomplished by means of DE-ION arc chutes. A push-to-trip button on the front of the circuit breaker shall provide a local manual means to exercise the trip mechanism.

3. Circuit breakers 250 ampere frame and below may be of the thermal-magnetic type with inverse time-current characteristics or shall be microprocessor based, as specified below.

4. Circuit breakers over 250 ampere frame shall be microprocessor-based with true RMS sensing trip units.

   a. Each molded case circuit breaker microprocessor-based tripping system shall consist of three current sensors, a microprocessor, and a flux-transfer shunt trip. True RMS sensing circuit protection shall be achieved by analyzing the secondary current signals received from the circuit breaker current sensors and initiating trip signals to the circuit breaker trip actuators when predetermined trip levels and time delay settings are reached.

   b. Interchangeable rating plugs shall establish the continuous trip ratings of each circuit breaker. Rating plugs shall be interlocked so they are not interchangeable between frames, and interlocked such that a breaker cannot be closed and latched with the rating plug removed.

   c. The microprocessor-based trip system shall have thermal memory capabilities to prevent the breaker from being reset following an overload condition until after a preset time delay.

   d. Molded Case Circuit Breaker Trip Units

      1) System coordination shall be provided by the following microprocessor-based time-current curve shaping adjustments:

         a) Adjustable long time pick-up and delay

         b) Adjustable short time pick-up and delay, with selective curve shaping

         c) Adjustable instantaneous pick-up

G. Miscellaneous Devices

1. Control power transformers with primary and secondary protection shall be provided and factory wired as required for proper operation of the equipment.

H. Enclosures

1. NEMA 1 indoor, ventilated enclosure

I. Nameplates

1. Each switchboard shall have an engraved nameplate on the door of each section. Engraved nameplate shall include switchboard designation, voltage, phase,

ampere rating of upstream feeder breaker or main circuit breaker, and upstream panel feeder as follows:

PANEL D42
1,600 AMPERE, 480/277 VOLT, 3 PHASE, 4 WIRE,
FED FROM SUBSTATION SSA

2. Engraved nameplates shall also be provided for all feeder breakers, mounted on the face of the assembly, with panel/equipment designations as indicated on the drawings.

3. Nameplates shall be laminated plastic, black characters on white background, and secured with screws. Characters shall be 3/16 inch high, minimum. Nameplates shall give item designation and circuit number as well as frame ampere size and appropriate trip rating.

4. Furnish Master nameplate giving switchboard designation, voltage ampere rating, short circuit rating, manufacturer's name, general order number and item number.

5. Control components mounted within the assembly, such as fuse blocks, relays, pushbuttons, switches, etc., shall be suitably marked for identification corresponding to appropriate designations on manufacturer's wiring diagrams.

J. Finish

1. All exterior and interior steel surfaces of the switchboard shall be properly cleaned and provided with a rust-inhibiting phosphatized coating. Color and finish of the switchboard shall be ANSI 61 light gray.

2.11 TRANSFORMERS - DRY TYPE DISTRIBUTION

B. Ratings

1. kVA and voltage ratings shall be as shown on the drawings.

2. Transformers shall be designed for continuous operation at rated kVA, for 24 hours a day, 365 days a year operation, with normal life expectancy as defined in ANSI C57.96.

3. Transformer sound levels shall not exceed the following ANSI and NEMA levels for self-cooled ratings:

a.	Up to 9 kVA:	40 dB
b.	10 to 50 kVA:	45 dB
c.	51 to 150 kVA:	50 dB
d.	151 to 300 kVA:	55 dB
e.	301 to 500 kVA:	60 dB
f.	501 to 700 kVA:	62 dB
g.	701 to 1,000 kVA:	64 dB

4. Transformers shall meet or exceed Class 1 efficiency levels per NEMA TP-1-2002, or the latest adopted edition.

C. Insulation Systems

1. Transformers shall be insulated as follows:

a. 2 kVA and below: 150 degrees C insulation system based upon 80 degree C rise.

b. 3 to 15 kVA: 185 degrees C insulation system based upon 115 degree C rise.

c. 15 kVA and above: 220 degrees C insulation system based upon 150 degree C rise.

2. Required performance shall be obtained without exceeding the above indicated temperature rise in a 40 degrees C maximum ambient with a 30 degrees C average ambient over 24 hours.

3. All insulation materials shall be flame-retardant and shall not support combustion as defined in ASTM Standard Test Method D635.

D. Core and Coil Assemblies

1. Transformer core shall be constructed with high-grade, nonaging, grain-oriented silicon steel with high magnetic permeability, and low hysteresis and eddy current losses. Maximum magnetic flux densities shall be substantially below the saturation point. The transformer core volume shall allow efficient transformer operation at 10% above the highest tap voltage. The core laminations shall be tightly clamped and compressed.

2. Coils shall be wound of electrical grade copper with continuous wound construction.

3. On units rated 15 kVA and below the core and coil assembly shall be completely encapsulated in a proportioned mixture of resin and aggregate to provide a moistureproof, shock-resistant seal. The core and coil encapsulation system shall minimize the sound level. Taps shall be two steps below nominal voltage in 5% increments.

4. On units rated 30 kVA and above the core and coil assembly shall be impregnated with non-hydroscopic, thermosetting varnish and cured to reduce hot spots and seal out moisture. The assembly shall be installed on vibration-absorbing pads and securely bolted to the base to minimize sound transmission. Taps shall be two steps above and 4 steps below nominal voltage in 2.5% increments.

5. Transformers 112.5 kVA and above shall have impedance levels of 5% or higher. If the transformer impedance levels are below 5%, it shall be the Electrical

Contractor's responsibility to adjust the short circuit ratings of all panelboards downstream of the transformer to a rating higher than the maximum theoretical let-thru current of the proposed transformer.

E. Wiring/Terminations

1. Recommended external cable shall be rated 90 degrees C for encapsulated and 75 degrees C for ventilated designs. Connectors should be selected on the basis of the type and cable size used to wire the specific transformer.

F. Enclosure

1. The enclosure shall be made of heavy-gauge steel. All transformers shall be equipped with a wiring compartment suitable for conduit entry and large enough to allow convenient wiring. The maximum temperature of the enclosure shall not exceed 90 degrees C. The core of the transformer shall be grounded to the enclosure.

2. On units rated 15 kVA and below the enclosure construction shall be totally enclosed, non-ventilated, NEMA 3R, with lifting eyes.

3. On units rated 30 kVA and above the enclosure construction shall be ventilated, NEMA 2, drip-proof, with lifting holes. All ventilation openings shall be protected against falling dirt.

4. Fan assisted convection cooling/ventilation shall not be acceptable

G. Finish

1. Enclosures shall be finished with ANSI 61 color weather-resistant enamel.

PART 3 - EXECUTION

3.1 COOPERATION AND WORK PROGRESS

A. The Electrical work shall be carried on under the usual construction conditions, in conjunction with all other work at the site. The Electrical Contractor shall cooperate with the Architect, Construction Manager, all other Subcontractors and equipment suppliers working at the site. The Electrical Contractor shall coordinate the work and proceed in a manner so as not to delay the progress of the project.

B. The Electrical Contractor shall coordinate his work with the progress of the building and other Trades so that he will complete his work as soon as conditions permit and such that interruptions of the building functions will be at a minimum. Any overtime hours worked or additional costs incurred due to lack of or improper coordination with other Trades or the Owner by the Electrical Contractor, shall be assumed by him without any additional cost to the Owner.

C. The Electrical Contractor shall furnish information on all equipment that is furnished under this Section but installed under another Section to the installing Subcontractor as specified herein.

D. The Electrical Contractor shall provide all materials, equipment and workmanship to provide for adequate protection of all electrical equipment during the course of construction of the project. This shall also include protection from moisture and all foreign matter. The Electrical Contractor shall also be responsible for damage which he causes to the work of other Trades, and he shall remedy such injury at his own expense.

E. Waste materials shall be removed promptly from the premises. All material and equipment stored on the premises shall be kept in a neat and orderly fashion. Material or equipment shall not be stored where exposed to the weather. The Electrical Contractor shall be responsible for the security, safekeeping and damages, including acts of vandalism, of all material and equipment stored at the job site.

F. The Electrical Contractor shall be responsible for unloading all electrical equipment and materials delivered to the site. This shall also include all large and heavy items or equipment which require hoisting. Consult with the Construction Manager for hoisting/crane requirements. During construction of the building, the Electrical Contractor shall provide additional protection against moisture, dust accumulation and physical damage of the main service and distribution equipment. This shall include furnishing and installing temporary heaters within these units, as approved, to evaporate excessive moisture and ventilate it from the room, as may be required.

G. It shall be the responsibility of the Electrical Contractor to coordinate the delivery of the electrical equipment to the project prior to the time installation of equipment will be required; but he shall also make sure such equipment is not delivered too far in advance of such required installation, to ensure that possible damage and deterioration of such equipment will not occur. Such equipment stored for an excessively long period of time (as determined in the opinion of the Architect) on the project site prior to installation may be subject to rejection by the Architect.

H. The Electrical Contractor shall erect and maintain, at all times, necessary safeguards for the protection of life and property of the Owner, Workmen, Staff and the Public.

I. Prior to installation, the Electrical Contractor has the responsibility to coordinate the exact mounting arrangement and location of electrical equipment to allow proper space requirements as indicated in the NEC. Particular attention shall be given in the field to group installations. If it is questionable that sufficient space, conflict with the work of other Subcontractors, architectural or structural obstructions will result in an arrangement which will prevent proper access, operation or maintenance of the indicated equipment, the Electrical Contractor shall immediately notify the Contractor and not proceed with this part of the Contract work until definite instructions have been given to him by the Architect.

J. The Electrical Contractor shall not allow any equipment or piping foreign to the electrical installation to be installed or pass through any room in which electrical systems or equipment are located, such as electric rooms, electric closets, telephone or

data closets. The Electrical Contractor shall notify the Contractor of such violations and request immediate removal.

3.2 INSTALLATION

A. General

1. Unless specifically noted or indicated otherwise, all equipment and material specified in Part 2 of this specification or indicated on the drawings shall be installed under this Contract whether or not specifically itemized herein. This Section covers particular installation methods and requirements peculiar to certain items and classes or material and equipment.

2. The Electrical Contractor shall obtain detailed information from manufacturers of equipment provided under Part 2 of this specification as to proper methods of installation.

3. The Electrical Contractor shall obtain final roughing dimensions and other information as needed for complete installation of items furnished under other Sections or furnished by the Owner.

4. The Electrical Contractor shall keep fully informed of size, shape and position of openings required for material and equipment provided under this and other Sections. Ensure that openings required for work of this Section are coordinated with work of other Sections. Provide cutting and patching as necessary.

5. The Electrical Contractor shall coordinate the electric service installation with the Owner.

6. All miscellaneous hardware and support accessories, including support rods, nuts, bolts, screws and other such items, shall be of a galvanized or cadmium plated finish or of another approved rust-inhibiting coating.

7. Throughout this Section where reference is made to steel channel supports, it shall be understood to mean that the minimum size shall be 1 5/8" mild strip steel with minimum wall thickness of 0.105", similar to Unistrut P1000 or equal products manufactured by Kindorf or Husky Products Co.

B. Concrete Housekeeping Pads

1. Concrete pads shall be installed for all freestanding low voltage distribution equipment.

2. The Construction Manager shall provide the concrete work. Electrical Contractor shall supervise and coordinate concrete work to ensure that proper grounding cable, rods, conduit, etc., are located as detailed and as required. The Electrical Contractor shall also ensure that the concrete is level to within manufacturers published tolerances.

3. All concrete housekeeping pads shall extend a minimum of 6" on each side from the equipment mounted on it. Mounting height of each overcurrent/disconnect device in the above equipment shall not exceed 6'-6" above finished floor. If overcurrent devices exceed 6’-6” above finished floor as a result of the housekeeping pad, the pad shall extend in front of the gear a minimum of 4’-0”.

C. Electrical Distribution Equipment

1. The Electrical Contractor shall install the low voltage distribution equipment per the manufacturers recommendations and the Contract Drawings.

2. The installation of all equipment, including working space requirements, shall conform to all NEC and local codes.

3. All necessary hardware to secure the assembly in place shall be provided by the Electrical Contractor.

4. The Electrical Contractor shall ensure that no piping, ductwork or other equipment foreign to the electrical trade passes through the area extending from the floor to the structural ceiling with the width and depth equal to that of the electrical distribution equipment plus 6" on either side of panel.

5. Floor mounted assemblies shall be installed on concrete housekeeping pads and shall be provided with adequate lifting means. Floor mounted assemblies shall be capable of being moved into installation position and bolted directly to the floor without the use of floor sills. The Electrical Contractor shall ensure the floor is level to 1/8 inch per 3-foot distance in any direction.

6. All electrical equipment shall be installed such that the handle of the highest circuit breaker does not exceed 6’-6” above finished floor.

7. The location of all electrical distribution equipment installed in mechanical or plumbing equipment rooms shall be coordinated with the respective Subcontractor.

8. The equipment shall be installed and checked in accordance with the manufacturer’s recommendations prior to first energization. This shall include but not limited to:

   a. Checking to ensure that the pad location is level to within .125 inches.

   b. Checking to ensure that all bus bars are torqued to the manufacturer's recommendations.

   c. Assemble all shipping sections, remove all shipping braces and connect all shipping split mechanical and electrical connections.

   d. Secure assemblies to foundation or floor channels.

e. Measure and record megger readings phase-to-phase, phase-to-ground, and neutral-to-ground (four-wire systems only).

f. Inspect and install all circuit breakers, components, etc. in their proper compartments.

9. Identification shall be provided for all electrical distribution equipment. The electrical system identification shall clearly describe the equipment connected. For additional information, refer to specification section 26 0520.

10. Control wiring shall be provided as required. Interface all local and remote control wiring and operational systems for each load.

11. Recessed and surface mounted equipment shall be mounted on walls with studs and cross-bracing, as required to assure sufficient strength so as to restrict any movement of the equipment.

12. Dry Type Transformers

a. Floor mounted transformers shall be mounted a minimum of 6" from walls with proper clearance in front. Floor mounted transformers shall be installed on non-metallic, vibration isolating pads meeting seismic requirements and selected for at least 0.2” deflection. Panelboards shall not be mounted on wall above transformers.

b. Trapeze mounted transformers shall be supported with threaded rods and channel and shall be isolated with hanger isolators meeting seismic requirements and suitable for the weight and size of the transformer.

13. Busway

a. Coordinate busway penetrations through floor slabs and provide a 3 1/2" high, minimum concrete curb around all busways at each floor penetration. Provide floor flanges for all busway penetrations through floor. Flanges shall be designed for a minimum 2 hour fire rating. Only UL listed firestops shall be used.

b. Busway shall be permitted to run directly to the substation feeder circuit breaker provided that the load side lugs for all feeder breakers, spare breakers and provisions for future breakers in the same switchgear cubicle are accessible and unobstructed for conductor terminations.

c. All sections of busway within 40'-0" of a connected substation or transformer shall be vibration isolated at each support.

d. Use non-metallic vibration isolators made of material suited for the service, and selected for at least 0.1" deflection.

3.3 REQUIREMENTS FOR EMERGENCY SYSTEMS WIRING

A. All feeder wiring for the emergency and legally required systems shall be installed in spaces or areas that are fully protected by and automatic fire suppression system. Feeders that are not protected by an automatic fire suppression system, such as feeders running horizontally above finished ceilings, shall be installed within dedicated 2-hour fire rated rooms, closets or shafts or shall be a listed 2 hour fire rated assembly, such as MI cable.

B. All feeder and branch circuit wiring for each system of the emergency and legally required systems shall be kept entirely independent of all other wiring, devices and equipment, and shall not enter the same raceways, boxes or cabinets with each other or other wiring, except as specifically allowed by the Code.

C. Where multiple transfer switches are provided for the same branch of emergency power, all wiring between the multiple systems shall be kept entirely independent of each other and all other branches of emergency power, except as specifically allowed by the Code

3.4 MATERIALS AND WORKMANSHIP

A. All materials and equipment shall be new and unused and shall meet requirements of the latest Standards of NEMA, UL, IPCEA, ANSI and IEEE. Equipment shall have components required or recommended by OSHA, applicable NFPA documents and shall be UL listed and labeled.

B. Despite references in the specifications or on the drawings to materials or pieces of equipment by name, make or catalog number, such references shall be interpreted as establishing standards of quality for materials and performance.

C. Finish of materials, components and equipment shall not be less than Industry good practice. When material or equipment is visible or subject to corrosive or atmospheric conditions, the finish shall be as approved by the Architect.

D. Provide proper access to material or equipment that requires inspection, replacement, repair or service. If proper access cannot be provided, confer with the Architect as to the best method of approach to minimize effects of reduced access.

E. All work shall be installed in a neat and workmanlike manner and shall be done in accordance with all Local and State Codes.

F. The Owner will not be responsible for material, equipment or the installation of same before testing and acceptance.

3.5 FACTORY TESTING

A. Standard factory tests shall be performed on the low voltage distribution equipment provided under this section. All tests shall be in accordance with the latest version of ANSI and NEMA standards.

B. Dry type Transformers

1. Ratio tests at the rated voltage connection and at all tap connections.

2. Polarity and phase relation tests on the rated voltage connection.

3. Applied potential tests.

4. Induced potential test.

5. No-load and excitation current at rated voltage on the rated voltage connection.

6. Resistance measurements on all windings at the rated voltage connection of each unit and at the tap extremes of the first unit made of a new design.

C. Factory tests as outlined above shall be witnessed by the owner's representative.

1. The manufacturer shall notify the owner two (2) weeks prior to the date the tests are to be performed.

2. The manufacturer shall include the cost of transportation and lodging for up to three (3) owner's representatives. The cost of meals and incidental expenses shall be the owner's responsibility.

D. The manufacturer shall provide three (3) certified copies of factory test reports.

3.6 FIELD SETTINGS

A. The Electrical Contractor shall perform field adjustments of the circuit breakers as required to place the equipment in final operating condition. The settings shall be in accordance with the approved protective device coordination study or as directed by the Engineer.

B. For transformers, adjust taps to deliver appropriate voltage and measure primary and secondary voltage to confirm proper setting.

C. Field Adjustments for Motor Control Centers/Starters

1. Follow the manufacturer's instructions and the contract documents concerning any short circuit device settings, heater selection, timing relays, or startup of components.

2. Heater installation and overload relay adjustment shall be the responsibility of the Electrical Contractor after field installation of the motor control center and verification of all motor full load amperes.

3.7 FIELD QUALITY CONTROL

A. Provide the services of a qualified factory-trained manufacturer's representative to assist the Electrical Contractor in installation and start-up of the equipment specified under this section for a period of 2 working days. The manufacturer's representative shall provide technical direction and assistance to the Electrical Contractor in general

assembly of the equipment, connections and adjustments, and testing of the assembly and components contained therein.

B. The Electrical Contractor shall provide three (3) copies of the manufacturer's field start-up report before final payment is made.

3.8 MANUFACTURER'S CERTIFICATION

A. A qualified factory-trained manufacturer's representative shall certify in writing that the equipment has been installed, adjusted, and tested in accordance with the manufacturer's recommendations.

B. The Electrical Contractor shall provide three (3) copies of the manufacturer's representative's certification before final payment is made.

C. A certified test report of all standard production tests shall be available to the Engineer upon request.

3.9 TRAINING

A. The Electrical Contractor shall provide a training session for up to 3 Owner's representative for 2 normal workdays at a jobsite location determined by the owner.

B. The training session shall be conducted by a manufacturer's qualified representative. The training program shall consist of the instruction on the operation of the assembly, circuit breakers, and major components within the assembly.

C. The training program shall include the following:

1. Review of the project one-line drawings and schedules.

2. Review of the factory record shop drawings.

3. Review of all equipment in the electrical distribution system.

4. Discuss the maintenance timetable and procedures to be followed in an ongoing maintenance program.

5. Provide three ring binders to participants complete with copies of drawings and other course material covered.

END OF SECTION

SECTION 263010 – ELECTRICAL POWER GENERATION

PART 1 - GENERAL

1.1 RELATED DOCUMENTS

A. All of the Contract Documents, as listed on the Table of Contents and including General and Supplementary Conditions and Division 01, General Requirements, shall be included in, and made part of, this Section.

1.2 DESCRIPTION OF WORK

A. Furnish an Emergency, Legally Required and Optional Standby power generation and automatic transfer system to automatically sense the loss of utility power, start the generator set and transfer the critical load between the normal and backup power source. The system shall also sense the return of utility power and automatically restore the system to its normal operating state.

B. The following general systems and equipment shall be provided, as a minimum, but not necessarily limited to the following:

1. Emergency distribution system.
2. Hoisting, rigging, setting of all equipment.
3. Testing, cleaning and adjusting.
4. Shop drawings.
5. Automatic transfer switches.

1.3 RELATED WORK

A. For work to be included as part of this Section, to be furnished and installed by the Electrical Contractor, refer to the Related Work section of Specification Section 26 0510.

B. Carefully examine all of the Contract Documents, criteria sheets and all other Sections of the specifications for requirements which affect work under this Section, whether or not such work is specifically mentioned in this Section.

1.4 REFERENCES

A. The electrical power generation and transfer equipment covered by these specifications shall be designed, tested and assembled in strict accordance with the latest edition of all applicable standards including, but not limited to, the following:

1. National Electrical Code (NEC) 700, 701, 702
2. National Fire Protection Association (NFPA) 110
3. NFPA 101
4. NFPA 99
5. American National Standards Institute (ANSI)
6. Underwriters Laboratories (UL)

7. Institute of Electrical and Electronics Engineers (IEEE)

1.5 QUALITY ASSURANCE

A. The manufacturers listed within this specification have been preselected for use on this project. No submittal will be accepted from a manufacturer other than specified.

1.6 WARRANTY

A. Attention is directed to provisions of the General Requirements, Supplementary General Requirements and Section 26 0510 regarding guarantees and warranties for the work under this Contract.

B. In addition to the requirements above, the manufacturer of the automatic transfer switches shall provide a full five (5) year extended warranty starting from the date of the accepted job site testing. The warranty shall include the following:

1. Repair parts
2. Labor
3. Travel expenses
4. In the event the transfer switch require replacement, the warranty shall also cover:

   a. Removal of the defective unit, including hoisting and rigging.
   b. Installation of the new unit including hoisting and rigging.
   c. Temporary transfer switch to maintain occupancy of the facility.
   d. All required electrical disconnections and connections to restore the system to its original condition.

C. Field Service

1. The combination transfer bypass/isolation switch manufacturer shall employ a nationwide factory-direct, field service organization, available on a 24 hour a day, 365 days a year, call basis.

2. The manufacture shall include an 800 telephone number, for field service contact, affixed to each enclosure.

3. The manufacturer shall maintain records of each transfer bypass/isolation switch, by serial number, for a minimum 20 years.

1.7 MAINTENANCE AND REPAIR CONTRACT

A. The generator set supplier shall offer, to the Owner, a maintenance and repair contract, which guarantees all support costs of the specified system. It shall include routine and 24 hour emergency access to a factory account manager to expedite emergency repairs.

B. The contract shall protect the user from parts and labor price increases and shall provide a refund of residual funds at any time of user dissatisfaction.

C. Optional payment schedules shall include:

1. Fixed rate throughout the life of the contract.
2. Graduated rate, which increases the low initial cost throughout the life of the contract.
3. Deferred rate which delays contract payment until expiration of the standard warranty.
4. Lump sum discounted payment.

1.8 SELECTIVE COORDINATION

A. The emergency distribution system, the elevator distribution system and the fire pump distribution system shall be selectively coordinated to meet the requirements of the National Electrical Code, Articles, 620.62, 700.27, and 701.27 and NFPA 20.

B. The switchgear manufacturer shall be responsible to select appropriate circuit breaker frame, sensor and trip sizes for all devices upstream of other devices for a completely coordinated system . Refer to specification 26 0570 for additional information.

1.9 WITHSTAND AND INTERRUPTING RATINGS OF ELECTRICAL COMPONENTS

A. Calculated available 3 phase and single phase to ground short circuit currents indicated on the drawings are provided for information only to assist in the selection of withstand and interrupting ratings and coordination of devices and equipment.

B. Prior to submission of shop drawings, the generator switchgear manufacturer shall obtain short circuit calculations from the low voltage distribution equipment manufacturer in accordance with specification section 26 0570 to determine actual available 3 phase and single line to ground short circuit current at each component in the system based on actual equipment, feeder lengths, impedances, etc. of the equipment proposed for this project. Failure to obtain the calculated short circuit values prior to submission of shop drawings shall not relieve the generator switchgear manufacturer from providing devices that meet the requirements of the final study report.

C. Each component shall be UL listed and labeled and shall be fully rated to withstand and interrupt calculated available 3 phase and single phase to ground short circuit current levels. Series ratings will not be acceptable.

1.10 SUBMITTALS

A. Prepare and submit shop drawings in accordance with the requirements hereinbefore specified, and with Section 01 3300 – Submittal Procedures in the manner described therein, modified as noted hereinafter.

B. All shop drawings shall have clearly marked the appropriate specification number of drawing designation, for identification of the submittal.

C. Disposition of shop drawings shall not relieve the Electrical Contractor from the responsibility for deviations from drawing or specifications, unless he has submitted in writing a letter itemizing or calling attention to such deviations at time of submission and secured written approval from the Engineer, nor shall such disposition of shop drawings relieve the Electrical Contractor from responsibility for errors in shop drawings or schedules.

D. Shop drawings shall include, but shall not be limited to, the following:

1. Component List - A breakdown of all components and options including transfer switches.

2. Automatic transfer switches:

   a. Descriptive literature
   b. Ratings
   c. Sequence of operation
   d. Plan, elevation, side and front view arrangement drawings with overall dimensions and clearance requirements
   e. Mounting and anchoring requirements
   f. Conduit entrance locations
   g. Equipment weights
   h. Schematic diagrams
   i. Wiring diagrams
   j. Accessories list
   k. UL Listings

3. The following equipment rooms with all the electrical equipment laid out with dimensions, Code clearances, etc., indicated shall be submitted with the equipment shop drawings. Acceptance of these shop drawings shall be obtained prior to installation of feeder conduits:

   a. All emergency electrical rooms and closets.
   b. Automatic transfer switches/distribution switchgear.

   Notes:

   Equipment shop drawings will not be reviewed without the room/equipment layouts.

   The Architect/Engineer reserve the right to rearrange equipment in electrical equipment rooms or spaces once final equipment dimensional information is known and prior to installation of the equipment. Install equipment in the final location selected by the Architect/Engineer at no additional cost to the Owner.

PART 2 - PRODUCTS

2.1 AUTOMATIC TRANSFER BYPASS/ISOLATION SWITCH

A. Manufacturers

1. Combination automatic transfer bypass/isolation switches shall be dual operator automatic transfer switches as manufactured by Russelectric or equivalent product as manufactured by ASCo.

B. Ratings

1. 480 Volt Class Automatic Transfer Switches shall have a 3 cycle close and withstand rating of 65,000 amperes as indicated on the drawings. The transfer switch manufacturer may be required to supply higher ampacity rated automatic transfer switch(es) in order to meet the minimum withstand rating required.

2. As a condition of approval, the manufacturer of the automatic transfer switches shall verify that their switches are listed by Underwriters Laboratories, Inc., Standard UL-1008 with fully rated 3 cycle short circuit closing and withstand values.

   a. During the 3 cycle closing and withstand tests, there shall be no contact welding or damage. The 3 cycle tests shall be performed without the use of current limiting fuses. The test shall verify that contacts separation has not occurred, and there is contact continuity across all phases. Test procedures shall be in accordance with UL 1008, and testing shall be certified by Underwriters' Laboratories, Inc.

   b. When conducting temperature rise tests to UL 1008, the manufacture shall include post-endurance temperature rise tests to verify the ability of the transfer switch to carry full rated current after completing the overload and endurance tests.

3. The microprocessor controller shall meet the following requirements:

   a. Storage conditions - 25 degrees C to 85 degrees C
   b. Operation conditions - 20 degrees C to 70 degrees C ambient
   c. Humidity 0 to 99% relative humidity, non-condensing
   d. Capable of withstanding infinite power interruptions
   e. Surge withstand per ANSI/IEEE C-37.90A-1978

C. Construction

1. The automatic transfer switch (ATS) and its associated bypass/isolation switch (BPS) shall be furnished as shown on the drawings. Voltage and continuous current ratings and number of poles shall be as shown.

2. Each automatic transfer switch shall have the number of poles as shown on the drawings. Where 4 pole switches are indicated, a true 4 pole switch shall be supplied with all four poles mounted on a common shaft. The continuous current rating and the closing and withstand rating of the fourth pole shall be identical to the rating of the main poles.

3. The automatic transfer bypass/isolation switch shall be mounted in a NEMA 1 enclosure, unless otherwise indicated. Enclosures shall be fabricated from 12 gauge steel. The enclosure shall be sized to exceed minimum wire bending space required by UL 1008.

4. The transfer switch shall be equipped with an internal welded steel pocket, housing an operations and maintenance manual.

5. The automatic transfer bypass/isolation switch shall have top and bottom cable access.

6. The main contacts shall be capable of being replaced without removing the main power cables.

7. The main contacts shall be visible for inspection without any major disassembly of the transfer switch.

8. All bolted bus connections shall have Belleville compression type washers.

9. When a solid neutral is required, a fully rated bus bar with required AL-CU neutral lugs shall be provided.

10. Control components and wiring shall be front accessible. All control wires shall be multi-conductor 18 gauge, 600 volt SIS switchboard type with point to point harness. All control wire terminations shall be identified with tubular sleeve-type markers.

11. The switch shall be equipped with 90 degrees C rated copper/aluminum solderless Burndy compression type lugs. Lugs shall be sized to accommodate conductor sizes as indicated on the drawings.

12. The complete automatic transfer bypass/isolation switch assembly shall be factory tested to ensure proper operation and compliance with the specification requirements. A copy of the factory test report shall be available upon request.

13. The automatic transfer switch shall be bused with silver plated copper bus. Aluminum bus, and/or cable interconnections are not acceptable. Construction shall be such that the Electrical Contractor needs to install only the power and control connections.

    a. Bus bars shall be arranged “A”, “B”, “C”, from front-to-back and/or top-to-bottom and/or left-to-right as viewed from the front of the equipment.

D. Bypass/Isolation Construction

1. Each transfer switch shall include a bypass/isolation switch to provide a safe and convenient means for manually bypassing and isolating the automatic transfer switch, regardless of the condition or position of the ATS, with the ability to be used as an emergency back-up system in the event the transfer switch should fail.

In addition, the bypass/isolation switch shall be utilized to facilitate maintenance and repair of the automatic transfer switch.

2. The automatic transfer switch shall be completely isolated from the bypass/isolation switch by means of insulating barriers and separate access doors to positively prevent hazard to operating personnel while servicing the automatic transfer switch.

3. All main contacts and operating linkages of the bypass/isolation section shall be identical to the ATS, except that the operation shall be manual.

4. The bypass/isolation switch shall have the same electrical ratings of ampacity, voltage, short circuit withstand, and temperature rise capability as the associated ATS. The main contacts of the bypass switch shall be mechanically locked in both the normal bypass and emergency bypass positions without the use of hooks, latches, magnets, or springs and shall be silver-tungsten alloy, protected by arcing contacts with magnetic blowouts on each pole. The switching mechanism shall provide "quick-break," "quick-make" operation of the contacts.

5. The automatic transfer switch and bypass/isolation switch shall be bused together with silver plated copper bus to provide a complete pre-tested assembly. Aluminum bus, and/or cable interconnections are not acceptable. Construction shall be such that the Electrical Contractor needs to install only the power and control connections.

6. The primary buswork of the draw-out automatic transfer switch shall be connected to the stationary bus stabs in the freestanding cubicle by silver plated, segmented, self-aligning, primary disconnect fingers to facilitate proper alignment between the removable draw-out when the ATS is withdrawn and shall be available for inspection without disturbing or de-energizing the main bus.

7. The secondary control disconnect contacts mounted on the ATS shall be self-aligning and shall plug into the stationary elements mounted on the freestanding cubicle. Separate, manual, secondary control disconnect plugs are not acceptable.

8. The isolating portion of the bypass/isolation shall allow the automatic transfer switch to be disconnected from all sources of power and control without opening the enclosure door. The transfer switch shall have a true draw-out configuration which does <u>not</u> require disconnection of any electrical or mechanical device by maintaining personnel. The automatic transfer switch shall be provided with rollers or casters to allow it to be removed from its enclosure simply by rolling it out. Positive mechanical interlocks shall be provided to insure that the bypass/isolation functions can be accomplished without the danger of a short circuit.

9. A fourth pole, switched neutral shall be provided if the associated automatic transfer switch is designed as 4 pole. Basic 4 pole, bypass/isolation switch construction shall be identical to the associated automatic transfer switch construction.

10. Necessary controls shall be provided to ensure that the “engine run” circuit remains closed when the switch is in the bypass-to-emergency position, even though the associated transfer switch is in the “normal” position or completely removed from the enclosure.

E. Automatic Transfer Switch

1. Dual operator transfer switch(es) shall be double throw, actuated by two electric motor operators or electric solenoids momentarily energized, and connected to the transfer mechanism by a simple over center type linkage. Minimum transfer time shall be 400 milliseconds. Transfer between two energized sources shall have an adjustable time delay of 0 to 120, factory set at 3 seconds to allow for motor wind-down. Single operator transfer switches with passive in-phase monitors will not be acceptable.

2. The normal and emergency contacts shall be positively interlocked mechanically and electrically to prevent simultaneous closing. Main contacts shall be mechanically locked in both the normal and emergency positions without the use of hooks, latches, magnets, or springs, and shall be silver-tungsten alloy. Separate arcing contacts with magnetic blowouts shall be provided on all transfer switches. Interlocked, molded case circuit breakers or contactors are not acceptable.

3. The transfer switch shall be equipped with a safe, manual operator, designed to prevent injury to operating personnel. The manual operator shall provide the same contact to contact transfer speed as the electrical operator to prevent a flashover from switching the main contacts slowly.

F. Automatic Transfer Switch Controls

1. The transfer switch shall be equipped with a microprocessor controller with a Power Supply Module, CPU and I/O Modules for all voltage and ampere ratings. The controller shall be capable of both Serial and Ethernet communications.

2. The controller shall contain voltage sensing modules capable of direct single phase or three phase sensing of each source from 120 VAC to 600 VAC. The Power Supply Module shall accept a 24VDC external power source allowing controller communications in the event of a power outage

3. Voltage sensing shall be true RMS type and accurate to +/- 1% of nominal voltage. Frequency sensing shall be accurate to +/- 0.5Hz. The operating temperature range shall be –20 to +50 degrees C and storage from –40 to +90 C.

4. The controller shall connect to the transfer switch through an interconnecting wiring harness. Interfacing relays shall be provided to isolate the controller from abnormal voltages applied to any and all customer input and output wiring terminals

5. All customer interface connections shall be wired to a common DIN rail Cage Clamp terminal block. Sufficient space shall be provided to allow for future modifications and upgrades.

6. The controller shall include a 20 character, LCD display, with a keypad, which allows access to the system.

7. The controller shall include three phase over/under voltage, over/under frequency, phase sequence detection and phase differential monitoring on both normal and emergency sources.

8. The Controller Display and Keypad

   a. A color ¼ VGA minimum, graphical display shall be provided for viewing data remotely and limited control through a front accessible USB communications port.
   b. The Controller shall include high intensity LED's for:

      1) Source Availability - Indicated the source voltage and frequency are within preset parameters
      2) Source Connected - Indicates the source main contacts closed and the load being served from the source
      3) XFER Inhibit - Indicates that the ATS is being inhibited for Automatic operation to the connected source
      4) Alarm - Indicates Alarm condition active
      5) TD Active - Indicates that a transfer switch time delay is actively timing

9. Power Quality Metering:

   a. The ATS shall be able to supply metering for current, voltage, real power, reactive power, energy use power factor and frequency. Metering shall be true RMS type, 1% accuracy for voltage and 0.5% currents and with 5 amp secondary current transformer
   b. The following parameters shall be provided: Phase Current, Phase Voltage, Voltage and Current unbalance, Hz, PF, W, Var, VA WH, Vah, VARh, Voltage and Current Harmonics, Phase rotation, Synchscope.
   c. The ATS shall be capable of monitoring and capturing waveform data in the event of a utility power outage or other user specified event.
   d. The controller shall be capable of logging digital and analog measured parameters and storing the data in non- volatile memory. The controller shall contain a 10 channel Data Logger. Each channel shall be capable of being configured to monitor a digital on/off or analog measured parameter. The sampling rate of each channel shall be configurable from 1 cycle to 60 minutes per sample. The data shall be stored in non-volatile memory in a first in, first out method.
   e. Alarm- Indicates Alarm condition active TD Active- Indicates that a transfer switch time delay is actively timing

G. Sequence of Operation

1. When the voltage on any phase of the normal source drops below 80% or increases to 120%, or frequency drops below 90%, or increase to 110%, or 20% voltage differential between phases occurs, after a programmable time delay period of 0-120 seconds factory set at 3 seconds to allow for momentary dips, the engine starting contacts shall close to start the generating plant.

2. The transfer switch shall transfer to the emergency source when the generating plant has reached 90% of rated voltage and frequency on all phases.

3. After restoration of normal power on all phases to a preset value of at least 90% to 110% of rated voltage, and at least 95% to 105% of rated frequency, and voltage differential is below 20%, an adjustable time delay period of 0-9,999 seconds (factory set at 300 seconds) shall delay retransfer to allow stabilization of normal power. If the emergency power source should fail during this time delay period, the switch shall automatically return to the normal source.

4. After retransfer to normal, the engine generator shall be allowed to operate at no load for a programmable period of 0-3,600 seconds, factory set at 300 seconds.

H. Automatic Transfer Switch Accessories

1. Programmable three phase sensing of the normal source set to pickup at 90% and dropout at 80% of rated voltage and over-voltage sensing to pickup at 120% and dropout out at 110% of rated voltage. Programmable under-frequency pickup at 95% and dropout at 90% and over frequency to pickup at 110% and dropout at 105% of rated frequency. Programmable voltage differential between phases set at 20%, and phase sequence monitoring.

2. Programmable three phase sensing of the emergency source set to pickup at 90% and dropout at 80% of rated voltage and over-voltage sensing to pickup at 120% and dropout out at 110% of rated voltage. Programmable under-frequency pickup at 95% and dropout at 90% and over frequency to pickup at 110% and dropout at 105% of rated frequency. Programmable voltage differential between phases set at 20%, and phase sequence monitoring.

3. Time delay for override of momentary normal source power outages (delays engine start signal and transfer switch operation). Programmable 0-10 seconds. Factory set at 3 seconds, if <u>not</u> otherwise specified.

4. For dual operator automatic transfer switches, time delay to control contact transition time on transfer to either source shall be provided. Programmable 0-120 seconds, factory set at 3 seconds.

5. Time delay on retransfer to normal, programmable 0-120 seconds, factory set at 300 seconds if not otherwise specified, with overrun to provide programmable 0-3,600 second time delay, factory set at 300 seconds, unloaded engine operation after retransfer to normal.

6. A two position, password protected, maintained type, load or no load test switch shall be included to simulate a normal power failure. The test function shall be

activated via pushbutton on the display or remotely via a dry contact, voltage signal or a network signal

7. Contacts for a remote type load test switch shall be included to simulate a normal power failure.

8. A time delay bypass on retransfer to normal shall be included.

9. Contact, rated 10 amperes, 30 volts DC, to close on failure of normal source to initiate engine starting.

10. Contact, rated 10 amperes, 30 volts DC, to open on failure of normal source for customer functions.

11. Light emitting diodes shall be mounted on the microprocessor panel to indicate:

    a. Switch is in normal position
    b. Switch is in emergency position
    c. Source availability

12. A plant exerciser shall be provided with seven (7), 7 day, 14 day or 28 day exercise periods, The exerciser shall also be configurable as a full 365 day exerciser with up to 24 independent exercise events. programmable for any day of the week and twenty-four (24) calendar events, programmable for any month/day, to automatically exercise generating plant programmable in one minute increments. Also include selection of either "no load" (switch will <u>not</u> transfer) or "load" (switch will transfer) exercise period.

13. Three auxiliary contacts rated 10 ampere, 120 volts AC (for switches 100 to 800 amps), 15 ampere, 120 volts AC (for switches 1,000 to 4,000 amps), shall be mounted on the main shaft, closed on normal. Contacts shall be wired to a terminal strip for ease of customer connections.

14. Three auxiliary contacts rated 10 ampere, 120 volts AC (for switches 100 to 800 amps), 15 ampere, 120 volts AC (for switches 1,000 to 4,000 amps), shall be mounted on the main shaft, closed on emergency. Contacts shall be wired to a terminal strip for ease of customer connections.

15. Diagnostics - The controller shall contain self diagnostic screen for the purpose of detecting and troubleshooting abnormal system events

16. Communications Interface - The controller shall be capable of interfacing via serial RS/485 or optional Ethernet TCP/IP communications ports integral to the controller. All communications parameters (baud rate, parity, IP address, Etc) shall be accessible and programmable via the front keypad. Both serial and Ethernet TCP/IP network connection

17. An LCD readout shall display normal source and emergency source availability.

18. Include two (2) time delay contacts that open simultaneously 10 seconds (adjustable 0 - 10 seconds) prior to transfer in either direction when transferring between two live sources. These contacts close after a time delay upon transfer. Programmable 0-9,999 seconds after transfer. This contact is for use by the elevator controller.

I. Field Wiring

1. The Electrical Contractor shall run control wiring between each transfer switch engine start circuit and the respective generator to be started.

2. The Electrical Contractor shall run control wiring between the transfer switch(es) serving the elevators and each elevator controller. Control wiring shall indicate when the transfer switch is in the emergency position for selective operation of elevators. Control wiring shall also be provided to indicate when the transfer switch will transfer between two live sources via accessory contacts indicated above to allow elevators to stop prior to transfer.

3. Control wiring indicated in paragraphs 1. and 2. above shall be installed in two (2) hour fire rated construction or shall be Pyrotenax System 1850 MI cable for its entire length.

PART 3 - EXECUTION

3.1 COOPERATION AND WORK PROGRESS

A. The Electrical work shall be carried on under the usual construction conditions, in conjunction with all other work at the site. The Electrical Contractor shall cooperate with the Architect, Construction Manager, all other Subcontractors and equipment suppliers working at the site. The Electrical Contractor shall coordinate the work and proceed in a manner so as not to delay the progress of the project.

B. The Electrical Contractor shall coordinate his work with the progress of the building and other Trades so that he will complete his work as soon as conditions permit and such that interruptions of the building functions will be at a minimum. Any overtime hours worked or additional costs incurred due to lack of or improper coordination with other Trades or the Owner by the Electrical Contractor, shall be assumed by him without any additional cost to the Owner.

C. The Electrical Contractor shall furnish information on all equipment that is furnished under this Section but installed under another Section to the installing Subcontractor as specified herein.

D. The Electrical Contractor shall provide all materials, equipment and workmanship to provide for adequate protection of all electrical equipment during the course of construction of the project. This shall also include protection from moisture and all foreign matter. The Electrical Contractor shall also be responsible for damage which he causes to the work of other Trades, and he shall remedy such injury at his own expense.

E. Waste materials shall be removed promptly from the premises. All material and equipment stored on the premises shall be kept in a neat and orderly fashion. Material or equipment shall not be stored where exposed to the weather. The Electrical Contractor shall be responsible for the security, safekeeping and damages, including acts of vandalism, of all material and equipment stored at the job site.

F. The Electrical Contractor shall be responsible for unloading all electrical equipment and materials delivered to the site. This shall also include all large and heavy items or equipment which require hoisting. Consult with the Construction Manager for hoisting/crane requirements. During construction of the building, the Electrical Contractor shall provide additional protection against moisture, dust accumulation and physical damage of the main service and distribution equipment. This shall include furnishing and installing temporary heaters within these units, as approved, to evaporate excessive moisture and ventilate it from the room, as may be required.

G. It shall be the responsibility of the Electrical Contractor to coordinate the delivery of the electrical equipment to the project prior to the time installation of equipment will be required; but he shall also make sure such equipment is not delivered too far in advance of such required installation, to ensure that possible damage and deterioration of such equipment will not occur. Such equipment stored for an excessively long period of time (as determined in the opinion of the Architect) on the project site prior to installation may be subject to rejection by the Architect.

H. The Electrical Contractor shall erect and maintain, at all times, necessary safeguards for the protection of life and property of the Owner, Workmen, Staff and the Public.

I. Prior to installation, the Electrical Contractor has the responsibility to coordinate the exact mounting arrangement and location of electrical equipment to allow proper space requirements as indicated in the NEC. Particular attention shall be given in the field to group installations. If it is questionable that sufficient space, conflict with the work of other Subcontractors, architectural or structural obstructions will result in an arrangement which will prevent proper access, operation or maintenance of the indicated equipment, the Electrical Contractor shall immediately notify the Contractor and not proceed with this part of the Contract work until definite instructions have been given to him by the Architect.

3.2 INSTALLATION

A. General

1. Unless specifically noted or indicated otherwise, all equipment and material specified in Part 2 of this specification or indicated on the drawings shall be installed under this Contract whether or not specifically itemized herein. This Section covers particular installation methods and requirements peculiar to certain items and classes or material and equipment.

2. The Electrical Contractor shall obtain detailed information from manufacturers of equipment provided under Part 2 of this specification as to proper methods of installation.

3. The Electrical Contractor shall obtain final roughing dimensions and other information as needed for complete installation of items furnished under other Sections or furnished by the Owner.

4. The Electrical Contractor shall keep fully informed of size, shape and position of openings required for material and equipment provided under this and other Sections. Ensure that openings required for work of this Section are coordinated with work of other Sections. Provide cutting and patching as necessary.

5. All miscellaneous hardware and support accessories, including support rods, nuts, bolts, screws and other such items, shall be of a galvanized or cadmium plated finish or of another approved rust-inhibiting coating.

6. Throughout this Section where reference is made to steel channel supports, it shall be understood to mean that the minimum size shall be 1 5/8" mild strip steel with minimum wall thickness of 0.105", similar to Unistrut P1000 or equal products manufactured by Kindorf or Husky Products Co.

B. Electrical Distribution Equipment

1. The Electrical Contractor shall install all emergency electrical distribution equipment per the manufacturers recommendations and the Contract Drawings.

2. The installation of all equipment, including working space requirements, shall conform to all NEC and local codes.

3. All necessary hardware to secure the assembly in place shall be provided by the Electrical Contractor.

4. <u>The Electrical Contractor shall ensure that no piping, ductwork or other equipment foreign to the electrical trade passes through the area extending from the floor to the structural ceiling with the width and depth equal to that of the electrical distribution equipment plus 6" on either side of panel</u>.

5. Floor mounted assemblies shall be installed on concrete housekeeping pads and shall be provided with adequate lifting means. Floor mounted assemblies shall be capable of being moved into installation position and bolted directly to the floor without the use of floor sills. The Electrical Contractor shall ensure the floor is level to 1/8 inch per 3-foot distance in any direction.

6. All floor and wall mounted electrical equipment shall be installed such that the handle of the highest circuit breaker does not exceed 6’-6” above finished floor.

7. The equipment shall be installed and checked in accordance with the manufacturer’s recommendations prior to first energization. This shall include but not limited to:

   a. Checking to ensure that the pad location is level to within .125 inches.

b. Checking to ensure that all bus bars are torqued to the manufacturer's recommendations.

c. Assemble all shipping sections, remove all shipping braces and connect all shipping split mechanical and electrical connections.

d. Secure assemblies to foundation or floor channels.

e. Measure and record megger readings phase-to-phase, phase-to-ground, and neutral-to-ground (four-wire systems only).

f. Inspect and install all circuit breakers, components, etc. in their proper compartments.

8. Identification shall be provided for all electrical distribution equipment. The electrical system identification shall clearly describe the equipment connected. Method of identification shall be by laminated nameplate made of bakelite or similar material with engraved letters at least 1/4" high and securely attached to the equipment with galvanized screws. Adhesives or cements shall not be used. A list of nameplates shall be submitted to the Architect for approval prior to fabrication.

9. Control wiring shall be provided as required. Interface all local and remote control wiring and operational systems for each load.

3.3 REQUIREMENTS FOR EMERGENCY SYSTEMS WIRING

A. All feeder and branch circuit wiring for each system of the emergency and legally required systems shall be kept entirely independent of all other wiring, devices and equipment, and shall not enter the same raceways, boxes or cabinets with each other or other wiring, except as specifically allowed by the Code.

B. Where multiple transfer switches are provided for the same branch of emergency power, all wiring between the multiple systems shall be kept entirely independent of each other and all other branches of emergency power, except as specifically allowed by the Code

3.4 MATERIALS AND WORKMANSHIP

A. All materials and equipment shall be new and unused and shall meet requirements of the latest Standards of NEMA, UL, IPCEA, ANSI and IEEE. Equipment shall have components required or recommended by OSHA, applicable NFPA documents and shall be UL listed and labeled.

B. Despite references in the specifications or on the drawings to materials or pieces of equipment by name, make or catalog number, such references shall be interpreted as establishing standards of quality for materials and performance.

C. Finish of materials, components and equipment shall not be less than Industry good practice. When material or equipment is visible or subject to corrosive or atmospheric conditions, the finish shall be as approved by the Architect.

D. Provide proper access to material or equipment that requires inspection, replacement, repair or service. If proper access cannot be provided, confer with the Architect as to the best method of approach to minimize effects of reduced access.

E. All work shall be installed in a neat and workmanlike manner and shall be done in accordance with all Local and State Codes.

F. The Owner will not be responsible for material, equipment or the installation of same before testing and acceptance.

3.10 TRAINING

A. The Electrical Contractor shall provide a training session for up to 2 Owner's representative for 1 normal workdays at a jobsite location determined by the owner.

B. The training session shall be conducted by a manufacturer's qualified representative. The training program shall consist of the instruction on the operation of the assembly, circuit breakers, and major components within the assembly.

C. The training program shall include the following:

1. Review of the project one-line drawings and schedules.

2. Review of the factory record shop drawings.

3. Review of all equipment in the emergency electrical distribution system.

4. Discuss the maintenance timetable and procedures to be followed in an ongoing maintenance program.

5. Provide three ring binders to participants complete with copies of drawings and other course material covered.

3.11 OPERATION INSTRUCTIONS AND MAINTENANCE MANUALS

A. After completion of work and start-up of the equipment at the jobsite, deliver to the Contracting Officer, copies of operating instructions, maintenance manuals and drawings presenting full details for care and maintenance of each item of equipment furnished and/or installed under this Contract.

B. Each manual shall contain the operating and maintenance information and parts lists furnished by the manufacturer, for all equipment provided in the Contract. When necessary, provide supplemental drawing to show system operation and servicing and maintenance points. For all electrical components, furnish wiring and connection diagrams. Manuals shall include instructions required to accomplish specified operation and functions. Data shall be neat, clean, legible copies. Drawings shall be accordion

folded. Non-applicable information shall not be included. Five (5) sets of manuals shall be furnished to the Owner.

C. Switchgear drawings and wiring diagrams shall be furnished complete and up to date at the completion of start-up and system acceptance by the Owner. Drawings and wiring diagrams shall include any field modifications or changes to reflect actual as built conditions.

END OF SECTION

SECTION 263350 – UNINTERRUPTIBLE POWER SYSTEMS

PART 1 - GENERAL

1.1 RELATED DOCUMENTS

A. All of the Contract Documents, as listed on the Table of Contents and including General and Supplementary Conditions and Division 01, General Requirements, shall be included in, and made part of, this Section.

1.2 DESCRIPTION OF WORK

A. This specification describes a three phase, on-line, solid state Uninterruptible Power System hereafter referred to as the UPS. The UPS shall operate in conjunction with the existing building electrical system to provide power conditioning, back-up power protection and distribution for electronic equipment loads. The system shall consist of a solid state inverter, rectifier/battery charger, a static switch, a maintenance bypass switch and a battery as described herein and on the plans.

1.3 RELATED WORK

A. For work to be included as part of this Section, to be furnished and installed by the Electrical Subcontractor, refer to the Related Work section of Specification Section 26 0510.

B. Carefully examine all of the Contract Documents, criteria sheets and all other Sections of the specifications for requirements which affect work under this Section, whether or not such work is specifically mentioned in this Section.

1.4 REFERENCES

A. The UPS shall meet the requirements of the following standards:

1. UL listed under 1778, Standards for Uninterruptible Power Supply Equipment

2. UL Canada (ULC)

3. FCC rules and regulations of Part 15, Subpart J, Class A

4. IEEE 587-1980/ANSI C62.41 1980 Standards for Surge Withstand Ability

5. The UPS shall be designed in accordance with the applicable sections of the documents published by:

a. National Fire Protection Association (NFPA)
b. National Electric Code (NEC)
c. National Electrical Manufacturer's Association (NEMA)
d. Occupational Safety & Health Administration (OSHA)

1.5 QUALITY ASSURANCE

A. The manufacturers listed within this specification have been preselected for use on this project. No submittal will be accepted from a manufacturer other than specified.

B. The manufacturer shall have a local, authorized dealer who can provide factory trained servicemen, the required stock of replacement parts, technical assistance and warranty administration within a reasonable distance from the project.

1.6 WARRANTY

A. Attention is directed to provisions of the General Requirements, Supplementary General Requirements and Section 26 0510 regarding guarantees and warranties for the work under this Contract.

B. The UPS including batteries shall be covered by a full parts and labor warranty from the manufacturer. The warranty period shall be for twelve (12) months from date of acceptance by the Owner. Labor, parts and travel shall be included for 24 hours per day 7 days per week. The UPS technicians must be employees of the manufacturer. Third party service is not acceptable. In addition the batteries shall be warranted by the battery manufacturer for a prorated period of nine additional years.

C. The Electrical Subcontractor shall guarantee that all elements of the systems which are to be provided under his Contract, are of sufficient capacity to meet the specified performance requirements as set forth herein or as indicated.

D. Upon receipt of notice from the Owner or Architect of failure of any part of the systems or equipment during the guarantee period, the affected part or parts shall be replaced by the Electrical Subcontractor for his work or any other work affected by the failure(s).

E. Electrical Subcontractor shall furnish, before the final payment is made, a written guarantee covering the above requirements.

1.7 SUBMITTALS

A. Prepare and submit shop drawings in accordance with the requirements hereinbefore specified, and with the Shop Drawings, Product Data and Samples Section 01 3300 in the manner described therein, modified as noted hereinafter.

B. All shop drawings shall have clearly marked the appropriate specification number of drawing designation, for identification of the submittal.

C. Disposition of shop drawings shall not relieve the Electrical Subcontractor from the responsibility for deviations from drawing or specifications, unless he has submitted in writing a letter itemizing or calling attention to such deviations at time of submission and secured written approval from the Engineer, nor shall such disposition of shop drawings relieve the Electrical Subcontractor from responsibility for errors in shop drawings or schedules.

D. Submittals shall include the following as a minimum:

1. Dimensions and weights including shipping splits
2. Single line wiring diagram
3. Interconnecting wiring diagram
4. Drawings of all system components
5. The manufacturer's complete standard specification

6. A paragraph by paragraph specification compliance with each paragraph and sub paragraph number listed and marked with one of the following:

   a. Exceed Specification (with explanation)
   b. Comply
   c. Deviation (with explanation)
   d. Exception (with explanation}

1.8 MANUFACTURERS

A. Approved Manufacturers

1. The specified equipment shall be manufactured by Schneider, Emerson Power Systems, Eaton, MGE UPS Systems, Inc., Exide Electronics, Liebert.

B. Documentation

1. The manufacturer shall furnish the owner an instruction manual covering the installation, operation and maintenance of the UPS and batteries.

1.9 OUTPUT RATINGS

A. The UPS system shall have a minimum output rating of 75 kVA.

1.10 INPUT REQUIREMENTS

A.	Voltage:	208/120 Volts, 3 phase, 4 wire plus ground +/- 15%.
B.	Input Frequency:	60 Hz +/- 10%.
C.	Input Current:	250 Amperes
D.	Input Power Factor:	Up to .95 lagging.
E.	Input Current Total Harmonic Distortion at nominal input voltage:	7%
F.	Walk in:	0 to 100% over a 10 second period.
G.	Magnetizing Inrush Current:	100% of nominal input current for less than one cycle fort he highest expandable kVA size.

1.11 OUTPUT CHARACTERISTICS

A. Voltage

1. 208/120 Volts, 3 phase, 4 wire plus ground.
2. Output voltage adjustable +/- 5%.

B. Voltage Regulation

1. +/- 0.5% for balanced load
2. +/- 5% for 100% unbalanced load

C. Voltage Transient Response

1. +/- 5% for 100% step load change
2. +/- 1% for loss or return of AC input power
3. +/- 1% for manual transfer at full load

D. Voltage Recovery Time

1. Return to within 1% of nominal value within 16.67 milliseconds (one cycle).

E. Phase Angle Displacement

1. 120° +/- 1° for balanced load
2. 120° +/- 3° for 100% unbalanced load

F. Voltage Distortion

1. Maximum 2% total (THD) and 1% any single harmonic when the UPS is connected to 100% linear loads.

G. Non-Linear Load Capability

1. Output voltage total harmonic distortion shall be less than 4% when connected to a 100% non-linear load with a crest factor not to exceed 3.5.

H. Frequency

1. 60 Hz + 2.0 Hz synchronized with bypass (selectable in 0.25 Hz increments).
2. 60 Hz + 0.1% free running.

I. Slew Rate

1. Set at 1 Hz/second maximum (selectable in .5 Hz increments up to 2.0 Hz).

J. Power Factor

1. 0.1 Unity at the rated volt-amperes (VA)

K. Overload Capability

1. 125% of rated load for 10 minutes
2. 150% of rated load for 1 minute
3. 212% current limit if bypass is not available
4. Voltage regulation is to be maintained as specified during the overload.

L. Efficiency

1. The UPS efficiency (AC to AC) with nominal input voltage and battery fully charged shall be 91% at 100% load, 91% at 75% load and 91% at 50% load.

2. The UPS supplier shall provide UL certification of efficiency. If UL certification is not available, the UPS vendor shall demonstrate the efficiency with an on-site load bank test. Resistive load banks shall be of the size and type capable of demonstrating the efficiency at 100%, 75% and 50% of the full load kW rating of the unit. If the UPS fails to meet the specified efficiency, the vendor shall modify the UPS to meet the efficiency or refund to the Owner a dollar value equal to the present value of 10 years of additional operating costs as determined by the Engineer.

1.12 DC BUS

A. DC Ripple: 1% of DC voltage

B. Low Battery Protection: At 1.75 VPC DC battery voltage or 2 hours after the UPS has shutdown on DC under voltage condition (battery cut off voltage), the battery circuit breaker shall open in order to prevent excessive battery discharge.

1.13 SYSTEM DESCRIPTION AND OPERATION

A. The UPS shall be designed to operate as an on-line reverse transfer system in the following modes:

1. Normal

a. The inverter shall continuously supply power to the critical load. The rectifier/battery charger shall derive power from the utility AC source and supply DC power to the inverter while simultaneously float charging the battery.

2. Emergency

a. Upon failure of the utility AC power source, the critical load shall be supplied by the inverter, which, without any switching, shall obtain its power from the battery.

3. Recharge

a. Upon restoration of the utility AC power source (prior to complete battery discharge), the rectifier/battery charger shall power the inverter and simultaneously recharge the battery.

4. Bypass Mode

a. The static bypass transfer switch shall be used to transfer the load to the bypass without interruption to the critical power load. This shall be accomplished by turning the inverter off. Automatic re-transfer or forward transfer of the load shall be accomplished by turning the inverter on.

5. Maintenance Bypass/Test Mode

a. A manual make before break maintenance bypass switch shall be provided to isolate the UPS inverter output and static bypass transfer switch for maintenance. This shall allow the UPS to be tested or repaired without affecting load operation.

PART 2 - PRODUCTS

2.1 RECTIFIER/BATTERY CHARGER

A. A six (6) pole, solid-state full-wave bridge rectifier shall convert the incoming AC power to regulated DC voltage, which shall be subsequently filtered to provide power for the inverter and battery charging functions. The rectifier/battery charger shall have sufficient capacity to support a fully loaded inverter and recharge the battery to 95% of its full capacity within 10 times the discharge time. The rectifier/battery charger assembly shall be constructed of modular plug-ins to facilitate maintenance.

B. Input Protection

1. The rectifier/battery charger shall be protected by an AC input circuit breaker or input fuses.

C. Current Limiting

1. Input Current Limit: 125% of nominal input current. A second step input current limit activated by a dry contact shall be provided. The second step input current limit is programmable.

2. Battery Current Limit: 10% of maximum discharge current. A second step input current limit activated by a dry contact shall be provided. The second step current limit is programmable.

D. Operating Modes

1. Automatic Charge Sequence: The rectifier battery charger shall automatically charge the batteries at an elevated voltage after an outage of 0-255 seconds for 0-255 hours.

2. Float: Nominal DC bus voltage (programmable) provided under nominal operating conditions.

2.2 INVERTER

A. The UPS output shall be derived from a IGBT Pulse Width Modulated (PWM) variable frequency and variable pulse width, transistorized-type inverter design. The inverter shall be capable of providing the specified precise output power characteristics while operating over the battery voltage range. The inverter assembly shall be constructed of modular rack out assemblies to facilitate maintenance.

2.3 STATIC BYPASS

A. The static bypass transfer switch shall be solid-state, rated for 100% continuous duty and shall operate under the following conditions:

1. Uninterrupted Transfer

a. The static bypass transfer switch shall automatically cause the bypass source to assume the critical load without interruption after the logic senses one of the following conditions:

1) Inverter overload exceeds unit's rating
2) Battery protection period expired and bypass available
3) Inverter failure

2. Interrupted Transfer

a. If the bypass source is beyond the conditions stated below, interrupted transfer (not less than 0.2 seconds in duration) shall be made upon detection of a fault condition.

1) Bypass voltage greater than + 10%, -15% from the UPS rated output voltage.

2) Bypass frequency greater than +/- 2 Hz (selectable in .25 Hz increments) from the UPS rated output frequency.

3. Automatic Uninterrupted Forward Transfer

a. The static bypass transfer switch shall automatically forward transfer, without interruption, after (1) the UPS inverter is turned "ON", or (2) after an instantaneous overload-induced reverse transfer has occurred and the load current returns to less than the unit's 100% rating.

4. Manual Transfer

a. A manual static transfer shall be initiated from the System Status and Control Panel by turning the UPS inverter off.

5. Overload Ratings

a. The static bypass transfer switch shall have the following overload capabilities:

1) 1000% of UPS output rating for 0.016 seconds (one cycle)
2) 150% of UPS output rating for 1 minute
3) 125% of UPS output rating for 10 minutes

2.4 BATTERY CABINET

A. The UPS shall be supplied with a single battery string to provide 15 minutes of backup at the full kW specified for the UPS. The battery cabinet or assemblies shall be furnished in a matching cabinet to the UPS. Each battery cabinet shall include a battery disconnect that shall provide a positive means of isolating the battery from the rest of the system for maintenance. The Battery cabinet shall be designed to allow for checking the torque on all battery connections in the battery system as well as providing sufficient access for preventative maintenance. If sufficient space is not included in the cabinet, it must be installed with access space between cabinets to allow maintenance of all batteries.

B. Battery Type: Sealed maintenance free high rate discharge, lead acid cells

2.5 MICROPROCESSOR CONTROLLED LOGIC

A. The full UPS operation shall be provided through the use of microprocessor controlled logic. All operations and parameters are firmware controlled, thus eliminating the need for manual adjustments or potentiometers. The logic shall include a self-test and diagnostic circuitry such that a fault can be isolated down to the printed circuit assembly or plug-in power assembly level. Every printed circuit assembly or plug-in power assembly shall be monitored. Diagnostics shall be performed via a PC through the local diagnostics port on the unit, or via a modem through the RS232 communication port.

2.6 SYSTEM STATUS AND CONTROL PANEL

A. The UPS shall be provided with a system status and control panel which controls, monitors and displays system operation and parameters.

B. System Parameters Monitored

1. The visual display shall display the following system parameters based on true RMS metering:

a. Input voltage (L-L). Three phase simultaneously.
b. Input current/phase. Three phase simultaneously.
c. Bypass input voltage (L-L and L-N). Three phase simultaneously.

d. Bypass input frequency.
e. UPS output voltage (L-L and L-N). Three phase simultaneously.
f. UPS output current/phase. Three phase simultaneously.
g. UPS output, bypass and input frequency.
h. UPS output % load.
i. UPS output power factor.
j. UPS output kVA and kW.
k. DC voltage
l. Crest factor per phase
m. Battery current (charge/discharge)
n. Time remaining on battery and available battery time
o. Battery cabinet temperature

C. Audible Alarm Reset Touch Pad

1. Shall be used to silence the audible alarm. If a new alarm is sensed after the original alarm has been silenced, it shall reactivate the audible alarm.

D. Emergency Power Off (EPO)

1. When EPO is pressed, it shall cause the AC input, bypass input contactor and battery circuit breakers to open, thereby shutting down the UPS and the load. The EPO function shall be capable of being initiated by an externally provided isolated dry contact (REPO).

E. Operating Instructions

1. The visual display shall provide all following menus and instructions:

a. Inverter ON/OFF commands
b. Language selection
c. Display contrast
d. Alarm display
e. Battery capacity
f. Voltage measurements
g. Current measurements
h. Frequency & power measurements
i. Communication options

F. LED Indication.

1. The visual display shall provide the following LED's:

a. Load on bypass
b. Operating event
c. UPS on line
d. Inverter on
e. Inverter off

G. Battery Monitor

1. The system shall be provided with an integral or stand alone battery monitor that will record all data necessary to maintain the battery warranty plus the following functions:

    a. Time remaining on battery with 5% accuracy for any load
    b. Alarm on the failure of any single battery
    c. Predicted remaining battery life remaining in years
    d. Alarm if the internal resistance of the battery indicates degraded performance
    e. Alarm at end of battery life prior to failure based on age, temperature history
    f. Alarm on high ambient temperature

2.7 MECHANICAL DESIGN

A. Enclosure

1. The UPS shall be housed in a free standing enclosure with dead front construction The overall size of the UPS shall not exceed those shown on the plans.

B. Ventilation

1. The UPS shall be designed for forced air cooling. Air inlets shall be provided from the front bottom of the UPS enclosure. Air filters shall be provided as standard. All fans shall be redundant.

2.8 COMMUNICATION FEATURES

A. Dry Contacts

1. Four alarm dry contacts shall be available for external connection. These contacts shall indicate:

    a. UPS on line/UPS on bypass
    b. UPS on battery
    c. Low battery shutdown imminent
    d. Summary alarm

2. The contacts shall change state to indicate the operating status. Contacts rated 100 milliamp @ 24 volts.

B. RS 232

1. A standard RS 232 communication port shall be provided to monitor the UPS at a local terminal. All alarms, messages, and standard measurements shall be available on the local terminal. All the information shall also be available remotely via a Hayes compatible modem.

C. Central Station Monitoring

1. A twenty-four hour-per-day, seven day-per-week remote UPS monitoring and reporting service shall be provided. Central station monitoring shall use standard analog telephone lines (via modem) as the communication medium to transmit critical UPS data back to a central station. In addition, the central station will communicate with each of the subscribing UPS's on a routine basis to check equipment status, operating conditions and all measured values. The central station will receive notification of UPS anomalies and equipment status. Each UPS's reported anomalies and all routine interrogation data will be accumulated for utilization in generating a quarterly customer report.

2.9 OUTPUT DISTRIBUTION PANELBOARDS.

A. The UPS shall be provided with output distribution panelboards, as shown on the contract drawings. The panel board will be an Eaton PRL1a or equal panel with bolt on or plug in breakers and will accommodate any combination of one, two or three pole breakers; up to 42 poles, 10-100 amp trip breakers.

2.10 OUTPUT MAIN SUB-FEED BREAKERS

A. Output circuit breakers as shown on the drawings shall be provided as an integral part of the UPS cabinet. Each of the distribution circuit breakers shall be sized as required and shall include auxiliary contacts and shunt trip.

2.11 MAINTENANCE BYPASS

A. The maintenance bypass shall be arranges as shown on the drawings. Maintenance bypass transfers shall be without interruption and electronically interlocked to protect the UPS from damage in the event of out of sequence transfers. The maintenance bypass circuit breakers shall be housed within the UPS enclosure or an external cabinet in such a way that service personnel will not be exposed to any electrically live parts while maintaining the unit.

2.12 SNMF INTERFACE

A. A standard Ethernet interface shall be provided complete with the SNMF agent firmware and both standard and extended MIB for UPS. The system shall be provided with an input module capable of reading room temperature and humidity's well as summary alarms from each of PDU and air conditioning unit. Each alarm on the UPS and external alarm shall generate an SNMP trap.

B. Microsoft Windows based network manager software shall be provided to display the following system information and alarms.

1. Utility voltage history graph
2. Utility frequency history graph
3. Battery charge level graph
4. Time remaining on battery
5. Battery service required

6. Battery low
7. UPS on bypass
8. UPS overload
9. Utility failure
10. Utility returned

C. The network manager software shall be licensed for use on at least 3 separate work stations.

D. Client software shall be provided for up to 250 servers to automatically program down Linux, Novell, Windows 2000, or UNIX and can be programmed to initiate any of the following actions on any of the above alarms:

1. Log event
2. Notify administrator
3. Run a script (shut down applications for example)
4. Send e-mail
5. Send FAX
6. Program down operating system

PART 3 - EXECUTION

3.1 COOPERATION AND WORK PROGRESS

A. The Electrical work shall be carried on under the usual construction conditions, in conjunction with all other work at the site. The Electrical Subcontractor shall cooperate with the Architect, General Contractor, all other Subcontractors and equipment suppliers working at the site. The Electrical Subcontractor shall coordinate the work and proceed in a manner so as not to delay the progress of the project.

B. The Electrical Subcontractor shall coordinate his work with the progress of the building and other Trades so that he will complete his work as soon as conditions permit and such that interruptions of the building functions will be at a minimum. Any overtime hours worked or additional costs incurred due to lack of or improper coordination with other Trades or the Owner by the Electrical Subcontractor, shall be assumed by him without any additional cost to the Owner.

C. The Electrical Subcontractor shall furnish information on all equipment that is furnished under this Section but installed under another Section to the installing Subcontractor as specified herein.

D. The Electrical Subcontractor shall provide all materials, equipment and workmanship to provide for adequate protection of all electrical equipment during the course of construction of the project. This shall also include protection from moisture and all foreign matter. The Electrical Subcontractor shall also be responsible for damage which he causes to the work of other Trades, and he shall remedy such injury at his own expense.

E. Waste materials shall be removed promptly from the premises. All material and equipment stored on the premises shall be kept in a neat and orderly fashion. Material or equipment shall not be stored where exposed to the weather. The Electrical Subcontractor shall be responsible for the security, safekeeping and damages, including acts of vandalism, of all material and equipment stored at the job site.

F. The Electrical Subcontractor shall be responsible for unloading all electrical equipment and materials delivered to the site. This shall also include all large and heavy items or equipment which require hoisting. Consult with the General Contractor for hoisting/crane requirements. During construction of the building, the Electrical Subcontractor shall provide additional protection against moisture, dust accumulation and physical damage of the main service and distribution equipment. This shall include furnishing and installing temporary heaters within these units, as approved, to evaporate excessive moisture and ventilate it from the room, as may be required.

G. It shall be the responsibility of the Electrical Subcontractor to coordinate the delivery of the electrical equipment to the project prior to the time installation of equipment will be required; but he shall also make sure such equipment is not delivered too far in advance of such required installation, to ensure that possible damage and deterioration of such equipment will not occur. Such equipment stored for an excessively long period of time (as determined in the opinion of the Architect) on the project site prior to installation may be subject to rejection by the Architect.

H. The Electrical Subcontractor shall erect and maintain, at all times, necessary safeguards for the protection of life and property of the Owner, Workmen, Staff and the Public.

I. Prior to installation, the Electrical Subcontractor has the responsibility to coordinate the exact mounting arrangement and location of electrical equipment to allow proper space requirements as indicated in the NEC. Particular attention shall be given in the field to group installations. If it is questionable that sufficient space, conflict with the work of other Subcontractors, architectural or structural obstructions will result in an arrangement which will prevent proper access, operation or maintenance of the indicated equipment, the Electrical Subcontractor shall immediately notify the Contractor and not proceed with this part of the Contract work until definite instructions have been given to him by the Architect.

3.2 INSTALLATION

A. General

1. Unless specifically noted or indicated otherwise, all equipment and material specified in Part 2 of this specification or indicated on the drawings shall be installed under this Contract whether or not specifically itemized herein. This Section covers particular installation methods and requirements peculiar to certain items and classes or material and equipment.

2. The Electrical Subcontractor shall obtain detailed information from manufacturers of equipment provided under Part 2 of this specification as to proper methods of installation.

3. The Electrical Subcontractor shall obtain final roughing dimensions and other information as needed for complete installation of items furnished under other Sections or furnished by the Owner.

4. The Electrical Subcontractor shall keep fully informed of size, shape and position of openings required for material and equipment provided under this and other Sections. Ensure that openings required for work of this Section are coordinated with work of other Sections. Provide cutting and patching as necessary.

B. Environmental Conditions

1. Ambient Temperature:

a. Operating: 0° to 30°C
b. Non-Operating: -25° to +70°C

2. Relative humidity (operating and storage): 0 to 95% non-condensing

3. Barometric Pressure

a. Operating:

1) Up to 1000 meters above sea level (up to 2000 meters with ambient temperature less than 28°C)

b. Non-Operating:

1) Up to 12,000 meters above sea level

4. Acoustical Noise: 72 dB "A" weighing at 5 feet.

C. Concrete Housekeeping Pads

1. Concrete pads shall be installed for uninterruptible power systems.

2. The General Contractor shall provide the concrete work. Electrical Subcontractor shall supervise and coordinate concrete work to ensure that proper grounding cable, rods, conduit, etc., are located as detailed and as required. The electrical Subcontractor shall also ensure that the concrete is level to within manufacturers published tolerances.

3. All concrete housekeeping pads shall extend a minimum of 6" on each side from the equipment mounted on it. Mounting height of each overcurrent/disconnect device in the above equipment shall not exceed 6'-6" above finished floor. If overcurrent devices exceed 6’-6” above finished floor as a result of the housekeeping pad, the pad shall extend in front of the gear a minimum of 4’-0”.

D. Electrical Distribution Equipment

1. The installation of all equipment, including working space requirements, shall conform to all NEC and local codes.

2. All necessary hardware to secure the assembly in place shall be provided by the Electrical Subcontractor.

3. The Electrical Subcontractor shall ensure that no piping, ductwork or other equipment foreign to the electrical trade passes through the area extending from the floor to the structural ceiling with the width and depth equal to that of the electrical distribution equipment plus 6" on either side of panel.

4. Floor mounted assemblies shall be installed on concrete housekeeping pads and shall be provided with adequate lifting means. Floor mounted assemblies shall be capable of being moved into installation position and bolted directly to the floor without the use of floor sills. The Electrical Subcontractor shall ensure the floor is level to 1/8 inch per 3-foot distance in any direction.

5. All electrical equipment shall be installed such that the handle of the highest circuit breaker does not exceed 6’-6” above finished floor.

6. The equipment shall be installed and checked in accordance with the manufacturer’s recommendations prior to first energization. This shall include but not limited to:

   a. Checking to ensure that the pad location is level to within .125 inches.

   b. Checking to ensure that all bus bars are torqued to the manufacturer's recommendations.

   c. Assemble all shipping sections, remove all shipping braces and connect all shipping split mechanical and electrical connections.

   d. Secure assemblies to foundation or floor channels.

   e. Measure and record megger readings phase-to-phase, phase-to-ground, and neutral-to-ground (four-wire systems only).

   f. Inspect and install all circuit breakers, components, etc. in their proper compartments.

7. Control wiring shall be provided as required. Interface all local and remote control wiring and operational systems for each load.

3.3 MATERIALS AND WORKMANSHIP

A. All materials and equipment shall be new and unused and shall meet requirements of the latest Standards of NEMA, UL, IPCEA, ANSI and IEEE. Equipment shall have components required or recommended by OSHA, applicable NFPA documents and shall be UL listed and labeled.

B. Despite references in the specifications or on the drawings to materials or pieces of equipment by name, make or catalog number, such references shall be interpreted as establishing standards of quality for materials and performance.

C. Finish of materials, components and equipment shall not be less than Industry good practice. When material or equipment is visible or subject to corrosive or atmospheric conditions, the finish shall be as approved by the Architect.

D. Provide proper access to material or equipment that requires inspection, replacement, repair or service. If proper access cannot be provided, confer with the Architect as to the best method of approach to minimize effects of reduced access.

E. All work shall be installed in a neat and workmanlike manner and shall be done in accordance with all Local and State Codes.

F. The Owner will not be responsible for material, equipment or the installation of same before testing and acceptance.

3.4 FACTORY TESTING

A. Standard factory tests shall be performed on the uninterruptible power system provided under this section. All tests shall be in accordance with the latest version of ANSI and NEMA standards.

3.5 FIELD QUALITY CONTROL

A. Provide the services of a qualified factory-trained manufacturer's representative to assist the Electrical Subcontractor in installation and start-up of the equipment specified under this section for a period of 1 working days. The manufacturer's representative shall provide technical direction and assistance to the Electrical Subcontractor in general assembly of the equipment, connections and adjustments, and testing of the assembly and components contained therein.

B. The Electrical Subcontractor shall provide three (3) copies of the manufacturer's field start-up report before final payment is made.

3.6 MANUFACTURER'S CERTIFICATION

A. A qualified factory-trained manufacturer's representative shall certify in writing that the equipment has been installed, adjusted, and tested in accordance with the manufacturer's recommendations.

B. The Electrical Subcontractor shall provide three (3) copies of the manufacturer's representative's certification before final payment is made.

C. A certified test report of all standard production tests shall be available to the Engineer upon request.

3.7 TRAINING

A. The Electrical Subcontractor shall provide a training session for up to 4 Owner's representative for 1 normal workday at a jobsite location determined by the owner.

B. The training session shall be conducted by a manufacturer's qualified representative. The training program shall consist of the instruction on the operation of the assembly, circuit breakers, and major components within the assembly.

C. The training program shall include the following:

1. Review of the project one-line drawings and schedules.

2. Review of the factory record shop drawings.

3. Review of all equipment in the electrical distribution system.

4. Discuss the maintenance timetable and procedures to be followed in an ongoing maintenance program.

5. Provide three ring binders to participants complete with copies of drawings and other course material covered.

END OF SECTION

SECTION 264110 – LIGHTNING PROTECTION SYSTEM

PART 1 - GENERAL

1.1 RELATED DOCUMENTS

A. All of the Contract Documents, as listed on the Table of Contents and including General and Supplementary Conditions and Division 01, General Requirements, shall be included in, and made part of, this Section.

1.2 DESCRIPTION OF WORK

A. Provide a complete lightning protection system with all component parts as indicated and/or specified, and as manufactured by Northeast Lightning Protection Systems, Inc., Bloomfield, Connecticut, National Lightning Protection Corporation Warren Lightning Rod Co., Collingwood, New Jersey, or an approved equal.

B. Equipment furnished by one of the above manufacturers or an independent protection company shall be considered as equals.

C. The system shall include air terminals on the roof; bonding of roof mounted mechanical equipment and stacks; bonding of structure and other metal parts, ground conductors and ground rods; with necessary connectors, bonding straps, fasteners, clamps and all other equipment and materials necessary for a complete system for the building.

1.3 RELATED WORK

A. For work to be included as part of this Section, to be furnished and installed by the Electrical Contractor, refer to the Related Work section of Specification Section 26 0510.

B. Carefully examine all of the Contract Documents, criteria sheets and all other Sections of the specifications for requirements which affect work under this Section, whether or not such work is specifically mentioned in this Section.

C. For work related to, and to be coordinated with the electrical work, but not included in this Section and required to be performed under other designated Sections, see the following:

1. Section 07 5000 – Membrane Roofing

1.4 REFERENCES

A. The lightning protection system and all components shall be designed, manufactured and installed in accordance with the latest applicable standards as follows:

1. ANSI/NFPA 780 - Lightning Protection Code

2. ANSI/UL 96 - Lightning Protection Components

3. UL 96A - Installation Requirements for Lightning Protection

B. The system shall be designed and installed in accordance with the requirements of NFPA 780 and UL 96A to obtain Master Label on the building.

1.5 WARRANTY

A. Attention is directed to provisions of the General Requirements, Supplementary General Requirements and Section 26 0510 regarding guarantees and warranties for work under this Contract.

1.6 QUALIFICATIONS

A. Manufacturer shall be a company specializing in lightning protection equipment, with minimum of (10) years documented experience and listed in UL's Electrical Construction Materials Directory or Supplement under Lightning Protection - Lightning Conductor, Air Terminals and Fittings.

B. Installer shall be authorized installer of manufacturer with minimum of (10) years of documented experience and listed in UL's Electrical Construction Materials Directory or Supplement under Lightning Protection - Lightning Protection Installation.

1.7 SUBMITTALS

A. Prepare and submit shop drawings in accordance with the requirements hereinbefore specified, and with Section 01 3300 – Submittal Procedures in the manner described therein, modified as noted hereinafter.

B. Submit shop drawings showing layout of air terminals, grounding electrodes, and bonding connections to structure and other metal objects. Include terminal, electrode and conductor sizes, and connection and termination details.

C. Submit product data showing dimensions and materials of each component, and include indication of listing in accordance with ANSI/UL 96.

D. The manufacturer/installer shall submit for approval one reproducible drawing of installation drawings of each building, indicating all work required for this item including ground rod locations, air terminal locations and cable locations. Catalog cuts of all components shall also be submitted for approval to the Architect/Engineer. Three (3) prints of drawings shall be submitted for approval and (5) prints shall be submitted after approval.

1.8 PROJECT RECORD DOCUMENTS

A. Submit project Record Documents.

B. Accurately record actual locations of air terminals, grounding electrodes, bonding connections, and routing of system conductors.

1.9 SEQUENCE AND SCHEDULING

A. Coordinate the work of this Section with roofing and exterior and interior finish installation.

PART 2 - PRODUCTS

2.1 MATERIALS

A. Materials shall be new and first quality commercial products. Standard fittings shall be used where practicable, in preference to special fittings.

B. Materials shall comply in weight, size and composition with the requirements of ANSI/UL 96 and the NFPA Code relating to this type of structure.

C. Lightning rod equipment and fittings shall bear the UL label.

2.2 AIR TERMINALS

A. Air terminals shall be one-piece, lead coated, solid copper.

B. Air terminals mounted on flat roofs shall be minimum 24" in height.

2.3 AIR TERMINAL BASES

A. Air terminal bases shall provide a secure attachment to the structure, the air terminal and the conductor cable. The base shall be compatible with all (3) items in contact with it.

2.4 CONDUCTORS

A. Ground and bonding conductors shall be soft drawn copper with a conductivity of at least 95% of pure copper.

2.5 CONNECTOR FITTINGS

A. A connector fitting shall be constructed so that a minimum of 1 1/2" of each conductor can be secured within the connector. It shall be compatible with the material being secured.

B. Water pipe connectors shall be constructed so as to provide at least 1 1/2" contact with the water pipe and conductor. It shall be compatible with the water pipe and conductor materials or be lead coated to form a bimetallic connection.

2.6 CLIPS

A. Clips for securing copper conductors shall be not less than 0.032" thick and not less than 3/8" wide. Clips shall be placed not more than 3'-0" apart along a conductor.

2.7 GROUND ELECTRODES

A. Ground electrodes shall be as specified of proper size and material compatible with ground conditions and to obtain the desired minimum ground resistance.

2.8 FASTENERS

A. Fasteners shall be compatible with the materials being secured and of a size and type specified.

2.9 CADWELD

A. Bonding of lighting protection systems to building steel, ground rods, cable connections, all connections below grade, etc. shall utilize Cadweld exothermic grounding connections

PART 3 - EXECUTION

3.1 COOPERATION AND WORK PROGRESS

A. The Electrical work shall be carried on under the usual construction conditions, in conjunction with all other work at the site. The Electrical Contractor shall cooperate with the Architect, Construction Manager, all other Subcontractors and equipment suppliers working at the site. The Electrical Contractor shall coordinate the work and proceed in a manner so as not to delay the progress of the project.

B. The Electrical Contractor shall coordinate his work with the progress of the building and other Trades so that he will complete his work as soon as conditions permit and such that interruptions of the building functions will be at a minimum. Any overtime hours worked or additional costs incurred due to lack of or improper coordination with other Trades or the Owner by the Electrical Contractor, shall be assumed by him without any additional cost to the Owner.

C. The Electrical Contractor shall furnish information on all equipment that is furnished under this Section but installed under another Section to the installing Subcontractor as specified herein.

D. The Electrical Contractor shall provide all materials, equipment and workmanship to provide for adequate protection of all electrical equipment during the course of construction of the project. This shall also include protection from moisture and all foreign matter. The Electrical Contractor shall also be responsible for damage which he causes to the work of other Trades, and he shall remedy such injury at his own expense.

E. Waste materials shall be removed promptly from the premises. All material and equipment stored on the premises shall be kept in a neat and orderly fashion. Material or equipment shall not be stored where exposed to the weather. The Electrical Contractor shall be responsible for the security, safekeeping and damages, including acts of vandalism, of all material and equipment stored at the job site.

F. The Electrical Contractor shall be responsible for unloading all electrical equipment and materials delivered to the site. This shall also include all large and heavy items or

equipment which require hoisting. Consult with the Construction Manager for hoisting/crane requirements. During construction of the building, the Electrical Contractor shall provide additional protection against moisture, dust accumulation and physical damage of the main service and distribution equipment. This shall include furnishing and installing temporary heaters within these units, as approved, to evaporate excessive moisture and ventilate it from the room, as may be required.

G. It shall be the responsibility of the Electrical Contractor to coordinate the delivery of the electrical equipment to the project prior to the time installation of equipment will be required; but he shall also make sure such equipment is not delivered too far in advance of such required installation, to ensure that possible damage and deterioration of such equipment will not occur. Such equipment stored for an excessively long period of time (as determined in the opinion of the Architect) on the project site prior to installation may be subject to rejection by the Architect.

H. The Electrical Contractor shall erect and maintain, at all times, necessary safeguards for the protection of life and property of the Owner, Workmen, Staff and the Public.

I. Prior to installation, the Electrical Contractor has the responsibility to coordinate the exact mounting arrangement and location of electrical equipment to allow proper space requirements as indicated in the NEC. Particular attention shall be given in the field to group installations. If it is questionable that sufficient space, conflict with the work of other Subcontractors, architectural or structural obstructions will result in an arrangement which will prevent proper access, operation or maintenance of the indicated equipment, the Electrical Contractor shall immediately notify the Contractor and not proceed with this part of the Contract work until definite instructions have been given to him by the Architect.

3.2 INSTALLATION

A. General

1. Unless specifically noted or indicated otherwise, all equipment and material specified in Part 2 of this specification or indicated on the drawings shall be installed under this Contract whether or not specifically itemized herein. This Section covers particular installation methods and requirements peculiar to certain items and classes or material and equipment.

2. The Electrical Contractor shall obtain detailed information from manufacturers of equipment provided under Part 2 of this specification as to proper methods of installation.

3. The Electrical Contractor shall obtain final roughing dimensions and other information as needed for complete installation of items furnished under other Sections or furnished by the Owner.

4. The Electrical Contractor shall keep fully informed of size, shape and position of openings required for material and equipment provided under this and other Sections. Ensure that openings required for work of this Section are coordinated with work of other Sections. Provide cutting and patching as necessary.

5. All miscellaneous hardware and support accessories, including support rods, nuts, bolts, screws and other such items, shall be of a galvanized or cadmium plated finish or of another approved rust-inhibiting coating.

6. The lightning protection system shall be installed in accordance with the current edition of UL 96A "Installation Requirements for Master Labeled Lightning Protection Systems".

   a. No ferrous fasteners (except stainless steel), nor ferrous holding devices of any kind shall be employed as permanent fasteners.

   b. Individual anchor bolts, employed in this installation, shall each have a pull-out resistance of not less than 200 pounds as determined by actual test.

   c. The installation shall be made in a most conspicuous manner. Conductors shall be coursed on the back side of architectural construction to conceal equipment as much as possible.

B. Air Terminal Installation

1. Air terminals shall be installed as required by UL.

2. Air terminals shall have their points aligned vertically, and their bases shall be bolted or welded to the building.

C. Conductor Installation

1. Down conductors shall be installed on buildings at intervals of 100'-0" on center, maximum. When structural building steel is used instead of down conductors, the ground conductor interval shall not average over 60'-0" on center.

2. Conductors shall be connected to the ground rods with ground clamps allowing a reasonable amount of slack conductor to allow for expansion and contraction. Steel surfaces shall be clean and bright before applying connector plates or Cadwelding. Bends in these conductors shall have no angle more than 90°. Bends shall have a radius of not less than 8". Connectors shall, when fixed to conductors, be capable of withstanding a pull of 200 pounds.

3. Bonding conductors shall be connected to the bonding clamps allowing a reasonable amount of slack for expansion and contraction, and the conductor bonds shall be limited as stated above.

4. All metal fascia, television masts, ventilators, vents, roof drains, stacks, etc. shall be grounded.

D. Ground Installation

1. Ground terminal installation shall be made at all locations indicated on the drawings and at such other points as may be found necessary to properly ground the system.

2. All grounds shall be made by means of rods driven into the soil which shall penetrate vertically not less than 10'-0" below the finished surface of the ground and passing approximately 2'-0" away from the building foundations.

3. The Electrical Contractor shall add to the ground system in case the measured resistance exceeds 25 ohms per electrode, at the direction of the Architect/Engineer and at no additional cost to the Owner.

4. A stamped tag of non-corrosive metal shall be attached to the metal support for each building adjacent to each ground connection, to indicate the location and arrangement of the rods and final value of the resistance at time of installation. An as-built drawing and record of resistance values shall be submitted in addition to the stamped tag.

E. Grounding Cable Connections

1. All grounding cable connections to ground rods, structural steel and splices shall be of the exothermic welding process.

F. Where cables penetrate the roofing membrane, penetrations shall be permanently sealed per roof manufacturer's recommended methods by the Roofing Subcontractor.

3.3 EXAMINATION

A. Verify that surfaces are ready to receive work.

B. Verify that field measurements are as shown on the drawings.

C. Beginning of installation shall mean installer accepts existing conditions.

3.4 PROTECTION OF SURROUNDING ELEMENTS

A. Protect elements surrounding work of this Section from damage or disfiguration.

3.5 FIELD QUALITY CONTROL

A. Field inspection and testing will be performed under provisions of Section 014000.

B. Obtain the services of UL to provide inspection and certification of the lightning protection system under provisions of UL 96A.

C. Obtain UL Master Label and attach to building at the location prescribed by UL 96A.

END OF SECTION

SECTION 264310 – SURGE PROTECTIVE DEVICES

PART 1 - GENERAL

1.1 RELATED DOCUMENTS

A. All of the Contract Documents, as listed on the Table of Contents and including General and Supplementary Conditions and Division 01, General Requirements, shall be included in, and made part of, this Section.

1.2 DESCRIPTION OF WORK

A. The work required under this section shall include all materials, labor and auxiliaries required to install a complete surge protective device system for the protection of building electrical and electronic systems from the effects of line and electromagnetic induced transient voltage surges and coupled lightning discharged transients as specified in this section.

1.3 RELATED WORK

A. For work to be included as part of this Section, to be furnished and installed by the Electrical Contractor, refer to the Related Work section of Specification Section 26 0510.

B. Carefully examine all of the Contract Documents, criteria sheets and all other Sections of the specifications for requirements which affect work under this Section, whether or not such work is specifically mentioned in this Section.

1.4 REFERENCES

A. The following standards and publications referenced in various parts of this specification shall apply:

1. UL 1449 3rd Edition – UL Standard for Safety for Surge Protective Devices, Dated May 2008

2. UL 1283 – Electromagnetic Interference Filters

3. IEEE C62.41.1 - 2002 – IEEE Guide on the Surge Environment in Low-Voltage (1000 V and Less) AC Power Circuits

4. IEEE C62.41.2 - 2002 – IEEE Recommended Practice on Characterization of Surges in Low-Voltage (1000 V and Less) AC Power Circuits

5. IEEE C62.45 - 2002 – IEEE Recommended Practice on Surge Testing for Equipment Connected to Low-Voltage (1000 V and Less) AC Power Circuits

6. IEEE C62.72 - 2007 – IEEE Guide for the Application of Surge-Protective Devices for Low-Voltage (1000 V or Less) AC Power Circuits

7. National Electrical Code – Article 285

1.5 WARRANTY

A. Attention is directed to provisions of the General Requirements, Supplementary General Requirements and Section 26 0510 regarding guarantees and warranties for the work under this Contract.

B. All surge protective devices shall be warranted to be free from defects in materials and workmanship under normal use in accordance with the instructions provided for a period of ten (10) years.

C. Any surge protective device, which exhibits evidence of failure or incorrect operation during the warranty period, shall be repaired or replaced by the manufacturer.

1.6 QUALIFICATIONS

A. All surge protective devices shall be manufactured by a single ISO-9001 or 9002 certified company normally engaged in the design, development and manufacture of such devices for electrical and electronic system equipment protection. The said firm shall offer a ten-year (10) warranty for its hard-wired surge protective devices.

B. The surge protective device manufacturer shall offer at no cost technical assistance through support from factory representatives and local authorized distributors and maintain a 24 hour toll free technical support hotline.

C. Equipment certification: Items shall be "Listed" by Underwriters Laboratories, Inc. and shall exhibit the UL Listing Mark for the category "Surge Protective Devices" or SPD's. UL Listing Card under category VZCA shall be provided to confirm compliance to UL1449 Third Edition Standard and assigned Voltage Protection Ratings.

D. Surge Protective Devices shall be installed and located in accordance with the requirements of all applicable National Fire Protection Association (NFPA) codes. The device shall be installed on the load-side of the main service disconnect per the scope of UL 1449 Standard for Safety for Surge Protective Devices.

E. The manufacturer of this equipment shall have produced similar electrical equipment for a minimum period of ten (10) years. When requested by the Engineer, an acceptable list of installations with similar equipment shall be provided demonstrating compliance with this requirement.

F. The SPD shall be compliant with the Restriction of Hazardous Substances (RoHS) Directive 2002/95/EC.

G. Manufacturers must provide third party Nationally Recognized Testing Laboratory verification of performance data.

1.7 ACCEPTABLE MANUFACTURERS

A. Eaton - Cutler Hammer
B. Square D

C. General Electric
D. Siemens
E. Advanced Protection technologies
F. Mersen

1.8 SUBMITTALS

A. Prepare and submit shop drawings in accordance with the requirements hereinbefore specified, and with Section 01 3300 – Submittal Procedures in the manner described therein, modified as noted hereinafter.

B. All shop drawings shall have clearly marked the appropriate specification number of drawing designation, for identification of the submittal.

C. Disposition of shop drawings shall not relieve the Electrical Contractor from the responsibility for deviations from drawing or specifications, unless he has submitted in writing a letter itemizing or calling attention to such deviations at time of submission and secured written approval from the Engineer, nor shall such disposition of shop drawings relieve the Electrical Contractor from responsibility for errors in shop drawings or schedules.

D. The equipment manufacturer shall submit the following information with each submittal:

1. Front view elevation.
2. Top view.
3. Single line.
4. Control schematics and wiring diagrams.
5. Nameplate schedule.
6. Component list/bill of material.
7. Conduit entry/exit locations.
8. Assembly ratings
9. Major component ratings
10. Cable terminal sizes.
11. Manufacturer's catalog data sheets.
12. Test reports.
13. The following product information shall be submitted:

    a. Descriptive bulletins.
    b. Product sheets.

PART 2 - PRODUCTS

2.1 ELECTRICAL REQUIREMENTS

A. Unit Operating Voltage – Refer to drawings for operating voltage and unit configuration.

B. Maximum Continuous Operating Voltage (MCOV) – The MCOV shall not be less than 125% of the nominal system operating voltage.

C. The suppression system shall incorporate thermally protected metal-oxide varistors (MOVs) as the core surge suppression component for the service entrance and all other distribution levels. The system shall not utilize silicon avalanche diodes, selenium cells, air gaps, or other components that may crowbar the system voltage leading to system upset or create any environmental hazards.

D. Protection Modes – The SPD must protect all modes of the electrical system being utilized. The required protection modes are indicated by bullets in the following table:

	Protection Modes			
Configuration	L-N	L-G	L-L	N-G
Wye	●	●	●	●
Delta	N/A	●	●	N/A
Single Split Phase	●	●	●	●
High Leg Delta	●	●	●	●

E. Nominal Discharge Current (I_n) – All SPDs applied to the distribution system shall have a 20kA I_n rating regardless of their SPD Type (includes Types 1 and 2) or operating voltage. SPDs having an I_n less than 20kA shall be rejected.

F. ANSI/UL 1449 3rd Edition Voltage Protection Rating (VPR) – The maximum ANSI/UL 1449 3rd Edition VPR for the device shall not exceed the following:

Modes	208Y/120	480Y/277	600Y/347
L-N; L-G; N-G	700	1200	1500
L-L	1200	2000	3000

2.2 SPD DESIGN

A. Maintenance Free Design – The SPD shall be maintenance free and shall not require any user intervention throughout its life. SPDs containing items such as replaceable modules, replaceable fuses, or replaceable batteries shall not be accepted. SPDs requiring any maintenance of any sort such as periodic tightening of connections shall not be accepted. SPDs requiring user intervention to test the unit via a diagnostic test kit or similar device shall not be accepted.

B. Balanced Suppression Platform – The surge current shall be equally distributed to all MOV components to ensure equal stressing and maximum performance. The surge suppression platform must provide equal impedance paths to each matched MOV. Designs incorporating replaceable SPD modules shall not be accepted.

C. Electrical Noise Filter – Each unit shall include a high-performance EMI/RFI noise rejection filter. Noise attenuation for electric line noise shall be up to 50 dB from 10 kHz to 100 MHz using the MIL-STD-220C insertion loss test method. Products unable able to meet this specification shall not be accepted.

D. Internal Connections – No plug-in component modules shall be used as surge current conductors. All internal components shall be soldered, hardwired with connections utilizing low impedance conductors.

E. Monitoring Diagnostics – Each SPD shall provide the following integral monitoring options:

1. Protection Status Indicators - Each unit shall have a green / red solid-state indicator light that reports the status of the protection on each phase.

   a. For wye configured units, the indicator lights must report the status of all protection elements and circuitry in the L-N, L-G and N-G modes. SPDs that indicate only the status of the L-N and L-G modes shall not be accepted.

   b. For delta configured units, the indicator lights must report the status of all protection elements and circuitry in the L-G and L-L modes.

   c. The absence of a green light and the presence of a red light shall indicate that damage has occurred on the respective phase or mode. All protection status indicators must indicate the actual status of the protection on each phase or mode. If power is removed from any one phase, the indicator lights must continue to indicate the status of the protection on all other phases and protection modes. Diagnostics packages that simply indicate whether power is present on a particular phase shall not be accepted.

2. Remote Status Monitor – The SPD must include Form C dry contacts (one NO and one NC) for remote annunciation of its status. Both the NO and NC contacts shall change state under any fault condition.

3. Audible Alarm and Silence Button – The SPD shall contain an audible alarm that will be activated under any fault condition.

4. Surge Counter – The SPD shall be equipped with an LCD display that indicates to the user how many surges have occurred at the location. The surge counter shall trigger each time a surge event with a peak current magnitude of a minimum of 500 ± 20A occurs. A reset pushbutton shall also be standard, allowing the surge counter to be zeroed. The reset button shall contain a mechanism to prevent accidental resetting of the counter via a single, short-duration button press. In order to prevent accidental resetting, the surge counter reset button shall be depressed for a minimum of 2 seconds in order to clear the surge count total.

   a. The ongoing surge count shall be stored in non-volatile memory. If power to the SPD is completely interrupted, the ongoing count indicated on the surge counter's display prior to the interruption shall be stored in non-volatile memory and displayed after power is restored. The surge counter's memory shall not require a backup battery in order to achieve this functionality.

F. Overcurrent Protection

1. The unit shall contain thermally protected MOVs. These thermally protected MOVs shall have a thermal protection element packaged together with the MOV in order to achieve overcurrent protection of the MOV. The thermal protection element shall disconnect the MOV(s) from the system in a fail-safe manner should a condition occur that would cause them to enter a thermal runaway condition.

G. Fully Integrated Component Design – All of the SPD's components and diagnostics shall be contained within one discrete assembly. SPDs or individual SPD modules that must be ganged together in order to achieve higher surge current ratings or other functionality shall not be accepted.

H. Safety Requirements

1. The SPD shall minimize potential arc flash hazards by containing no user serviceable / replaceable parts and shall be maintenance free. SPDs containing items such as replaceable modules, replaceable fuses, or replaceable batteries shall not be accepted. SPDs requiring any maintenance of any sort such as periodic tightening of connections shall not be accepted. SPDs requiring user intervention to test the unit via a diagnostic test kit or similar device shall not be accepted.

2.3 SYSTEM APPLICATION

A. The SPD applications covered under this section include switchgear and switchboard assemblies. All SPDs shall be tested and demonstrate suitability for application within ANSI/IEEE C62.41 Category C environment.

B. Surge Current Capacity – The minimum surge current capacity the device is capable of withstanding shall be as shown in the following table:

Minimum surge current capacity based on ANSI / IEEE C62.41 location category			
Category	Application	Per Phase	Per Mode
C	Service Entrance Locations (Switchboards, Switchgear, MCC, Main Entrance)	250 kA	125 kA

C. SPD Type – all SPDs installed on the line side of the service entrance disconnect shall be Type 1 SPDs. All SPDs installed on the load side of the service entrance disconnect shall be Type 1 or Type 2 SPDs.

2.4 SWITCHGEAR REQUIREMENTS

A. Switchgear Requirements

1. The SPD application covered under this section is for switchgear, switchboard, MCC, and busway locations. Service entrance located SPDs shall be tested and

demonstrate suitability for application within ANSI/IEEE C62.41 Category C environments.

2. The SPD shall be factory installed inside the switchgear at the assembly point by the original equipment manufacturer

3. Locate the SPD on the load side of the main disconnect device, as close as possible to the phase conductors and the ground/neutral bar.

4. The SPD shall be connected through a disconnect (30A circuit breaker). The disconnect shall be located in immediate proximity to the SPD. Connection shall be made via bus, conductors, or other connections originating in the SPD and shall be kept as short as possible.

5. The SPD shall be integral to switchgear, switchboard, MCC, and/or bus plug as a factory standardized design.

6. All monitoring and diagnostic features shall be visible from the front of the equipment.

7. The complete assembly including the SPD shall be UL listed for the application.

2.5 ENCLOSURES

A. All enclosed equipment shall have NEMA 1 general purpose enclosures, unless otherwise noted. Provide enclosures suitable for locations as indicated on the drawings and as described below:

1. NEMA 1 – Constructed of a polymer (units integrated within electrical assemblies) or steel (sidemount units only), intended for indoor use to provide a degree of protection to personal access to hazardous parts and provide a degree of protection against the ingress of solid foreign objects (falling dirt).

2. NEMA 4 – Constructed of steel intended for either indoor or outdoor use to provide a degree of protection against access to hazardous parts; to provide a degree of protection of the equipment inside the enclosure against ingress of solid foreign objects (dirt and windblown dust); to provide a degree of protection with respect to the harmful effects on the equipment due to the ingress of water (rain, sleet, snow, splashing water, and hose directed water); and that will be undamaged by the external formation of ice on the enclosure. (sidemount units only)

3. NEMA 4X – Constructed of stainless steel providing the same level of protection as the NEMA 4 enclosure with the addition of corrosion protection. (sidemount units only)

PART 3 - EXECUTION

3.1 COOPERATION AND WORK PROGRESS

A. The Electrical work shall be carried on under the usual construction conditions, in conjunction with all other work at the site. The Electrical Contractor shall cooperate with the Architect, Construction Manager, all other Subcontractors and equipment suppliers working at the site. The Electrical Contractor shall coordinate the work and proceed in a manner so as not to delay the progress of the project.

B. The Electrical Contractor shall coordinate his work with the progress of the building and other Trades so that he will complete his work as soon as conditions permit and such that interruptions of the building functions will be at a minimum. Any overtime hours worked or additional costs incurred due to lack of or improper coordination with other Trades or the Owner by the Electrical Contractor shall be assumed by him without any additional cost to the Owner.

C. The Electrical Contractor shall furnish information on all equipment that is furnished under this Section but installed under another Section to the installing Subcontractor as specified herein.

D. The Electrical Contractor shall provide all materials, equipment and workmanship to provide for adequate protection of all electrical equipment during the course of construction of the project. This shall also include protection from moisture and all foreign matter. The Electrical Contractor shall also be responsible for damage which he causes to the work of other Trades, and he shall remedy such injury at his own expense.

E. Waste materials shall be removed promptly from the premises. All material and equipment stored on the premises shall be kept in a neat and orderly fashion. Material or equipment shall not be stored where exposed to the weather. The Electrical Contractor shall be responsible for the security, safekeeping and damages, including acts of vandalism, of all material and equipment stored at the job site.

F. The Electrical Contractor shall be responsible for unloading all electrical equipment and materials delivered to the site. This shall also include all large and heavy items or equipment which require hoisting. Consult with the Construction Manager for hoisting/crane requirements. During construction of the building, the Electrical Contractor shall provide additional protection against moisture, dust accumulation and physical damage of the main service and distribution equipment. This shall include furnishing and installing temporary heaters within these units, as approved, to evaporate excessive moisture and ventilate it from the room, as may be required.

G. It shall be the responsibility of the Electrical Contractor to coordinate the delivery of the electrical equipment to the project prior to the time installation of equipment will be required; but he shall also make sure such equipment is not delivered too far in advance of such required installation, to ensure that possible damage and deterioration of such equipment will not occur. Such equipment stored for an excessively long period of time (as determined in the opinion of the Architect) on the project site prior to installation may be subject to rejection by the Architect.

H. The Electrical Contractor shall erect and maintain, at all times, necessary safeguards for the protection of life and property of the Owner, Workmen, Staff and the Public.

I. Prior to installation, the Electrical Contractor has the responsibility to coordinate the exact mounting arrangement and location of electrical equipment to allow proper space requirements as indicated in the NEC. Particular attention shall be given in the field to group installations. If it is questionable that sufficient space, conflict with the work of other Subcontractors, architectural or structural obstructions will result in an arrangement which will prevent proper access, operation or maintenance of the indicated equipment, the Electrical Contractor shall immediately notify the Contractor and not proceed with this part of the Contract work until definite instructions have been given to him by the Architect.

J. The Electrical Contractor shall not allow any equipment or piping foreign to the electrical installation to be installed or pass through any room in which electrical systems or equipment are located, such as electric rooms, electric closets, telephone or data closets. The Electrical Contractor shall notify the Contractor of such violations and request immediate removal.

3.2 INSTALLATION

A. Surge Protectors shall be installed within or as close as practical to the electrical panel or dedicated electronic equipment to be protected. The SPD shall be close coupled to the panel in a position near the panelboard neutral bus bar or positioned so that the overall lead length is less than 24 inches.

B. The Surge Protector shall be installed in accordance NEC Article 285 and per manufacturer's instructions in a manner consistent with proper and acceptable industry practice. SPD connection leads shall be as short and straight as possible and shall avoid sharp bends.

C. Prior to, and during electrical acceptance testing, surge protective devices shall be de-energized. Surge protective devices shall not be energized and connected to the distribution system until electrical acceptance testing is complete and the system has been determined to be safe and stable.

D. Surge Protectors provided with terminals shall be wired with largest stranded conductor permitted within rating of lugs, minimum #10 AWG.

E. The Surge Protector shall be installed with a means for disconnecting the device for servicing via an integral disconnect switch or a dedicated three-pole 15 amp minimum circuit breaker.

F. Surge Protective Devices shall be provided at the following locations as per panel schedule and drawings:

1. Main Electrical Service Entrance.

2. Distribution & Branch Circuit Panels.

3. Fire Alarm, Security and Energy Management Panels.

4. PBX Communications & Intercom Power Supply Systems.

5. Automatic Transfer Switches for Emergency Back-up Generators.

6. Step-down/Step-up Transformers, K-Factor Transformers and Voltage Regulators.

3.3 MATERIALS AND WORKMANSHIP

A. All materials and equipment shall be new and unused and shall meet requirements of the latest Standards of NEMA, UL, IPCEA, ANSI and IEEE. Equipment shall have components required or recommended by OSHA, applicable NFPA documents and shall be UL listed and labeled.

B. Despite references in the specifications or on the drawings to materials or pieces of equipment by name, make or catalog number, such references shall be interpreted as establishing standards of quality for materials and performance.

C. Finish of materials, components and equipment shall not be less than Industry good practice. When material or equipment is visible or subject to corrosive or atmospheric conditions, the finish shall be as approved by the Architect.

D. Provide proper access to material or equipment that requires inspection, replacement, repair or service. If proper access cannot be provided, confer with the Architect as to the best method of approach to minimize effects of reduced access.

E. All work shall be installed in a neat and workmanlike manner and shall be done in accordance with all Local and State Codes.

F. The Owner will not be responsible for material, equipment or the installation of same before testing and acceptance.

END OF SECTION

SECTION 265010 – LIGHTING FIXTURES

PART 1 - GENERAL

1.1 RELATED DOCUMENTS

A. All of the Contract Documents, as listed on the Table of Contents and including General and Supplementary Conditions and Division 01, General Requirements, shall be included in, and made part of, this Section.

1.2 DESCRIPTION OF WORK

A. The work under this Section shall include furnishing, installing and final aiming, and adjustment, under the supervision of the Architect, all interior and exterior lighting fixtures.

B. The work under this Contract shall also include all labor, materials, tools, equipment, transportation, insurance, temporary protection, supervision and incidental items essential for proper installation and operation, even though not specifically mentioned or indicated on the drawings, but which are usually provided or are essential for proper installation and operation of all systems as indicated on the drawings and specified herein.

C. The specifications and drawings describe the minimum requirements that must be met by the Contractor for the installation of all work as shown on the drawings and as specified herein under.

D. The following general systems and equipment shall be provided, as a minimum, but not necessarily limited to the following:

1. Lighting fixtures
2. Lamps
3. Ballasts

1.3 RELATED WORK

A. For work to be included as part of this Section, to be furnished and installed by the Electrical Contractor, refer to the Related Work section of Specification Section 260510.

B. Carefully examine all of the Contract Documents, criteria sheets and all other Sections of the specifications for requirements which affect work under this Section, whether or not such work is specifically mentioned in this Section.

1.4 REFERENCES

A. All lighting fixtures including custom fixtures and modified standard products shall comply with all applicable provisions of the following Codes and Trade Standard Publications, and are hereby incorporated into, and made a part of, the Contract Documents:

1. NFPA 70: National Electrical Code
2. UL: Underwriters' Laboratories
3. NEC: National Electrical Code
4. CBM: Certified Ballast Manufacturers Association
5. IES: Illuminating Engineering Society
6. ASTM: American Society for Testing and Materials
7. ANSI: American National Standards Institute

1.5 QUALITY ASSURANCE

A. The manufacturers listed within this specification have been preselected for use on this project. No submittal will be accepted from a manufacturer other than specified.

1.6 WARRANTY

A. In addition to the provisions of the General Requirements, Supplementary General Requirements and Section 260510 regarding guarantees and warranties for the work under this Contract, lighting fixture manufacturer(s) shall provide a total system warranty that includes the fixture, lamps, ballasts and all associated wiring and appurtenances provided with each fixture.

1.7 SUBMITTALS

A. Prepare and submit shop drawings in accordance with the requirements hereinbefore specified, and with Section 01 3300 – Submittal Procedures in the manner described therein, modified as noted hereinafter.

B. Submit samples of each fixture type under this Section as may be requested by the Architect for approval. Samples shall be in size and form requested by the Architect, and reasonable to show characteristics, color and finishes of the materials.

C. Submit complete manufacturer's product data of all materials and systems to the Architect for approval, consisting of complete product description and specifications, complete performance test data, complete preparation and installation instructions, and all other pertinent technical data required for complete product and product use information.

D. All shop drawings shall have clearly marked the fixture type, the appropriate specification number and/or drawing designation for identification of the submittal.

E. Disposition of shop drawings shall not relieve the Contractor from the responsibility for deviations from drawings or specifications unless he has submitted, in writing, a letter itemizing or calling attention to such deviations at time of submission and secured written approval from the Architect, nor shall such disposition of shop drawings relieve the Contractor from responsibility for errors in shop drawings or schedules.

F. Shop drawings, samples, test data and certificates shall be submitted for approval in accordance with the requirements of the Contract Documents. Fixtures or other materials shall not be shipped, stored or installed into the work unless prior approval has been received, based upon the submittal of shop drawings, samples, catalogue cuts,

test data, certificates or other materials submitted for approval. Make modifications to fixtures in accordance with Architect's comments concerning submittals, as a part of the work of this Section.

G. Submittal Schedule

1. Within 30 calendar days after award of General Contract, a List of Intended Manufacturers and estimated fabrication lead times shall be submitted to Architect. "Lead times" shall be measured in weeks, beginning from the manufacturer's receipt of approved shop drawings and release, and ending at shipment. Architect shall approve or disapprove each manufacturer.

2. Within 15 days after Contractor's receipt of Architect's response to the List of Intended Manufacturers, copies of purchase orders and manufacturers' acknowledgements for all fixtures specified, conforming to Architect's responses, shall be forwarded to Architect. The purchase orders and the manufacture acknowledgements need not list prices but shall contain a warranted fabrication lead time, in weeks, as defined above. These fabrication times shall be adequate for the timely completion of the job.

3. Within 30 days after date of manufacturer's acknowledgement of order, Contractor shall forward to Architect complete shop drawings, and/or catalogue cuts for all specified fixtures.

4. Within 15 days after receipt of reviewed shop drawings marked with "no exceptions taken" or "revise as indicated – no resubmittal required", Contractor shall forward to Architect a warranted shipment date for each specified fixture, as well as forwarding samples, texts, or any outstanding data required for approval.

5. Within 15 days after Contractor's receipt of reviewed shop drawings marked with “resubmittal required”, revised shop drawings shall be resubmitted to Architect.

6. Contractor shall call to the attention of Architect any submittals that have not been returned to him in a timely manner and that might affect the appropriate delivery of fixtures.

H. Shop Drawings

1. Indicate on shop drawings, materials, finishes, metal gauges, overall and detail dimensions, sizes, electrical and mechanical connections, fasteners, welds, joints, end conditions, provisions for the work of others, and similar information. Include pertinent mounting details including hung ceiling construction. Indicate complete details of the fixture, including manufacturer's catalogue numbers for sockets, ballasts, light shields, switches and type of wiring, and targeting and locking devices for adjustable fixtures. Indicate type and extent of approved inert insulating materials to prevent electrolytic corrosion at junctions of dissimilar metals shall be supplemented by additional drawings if information or descriptions listed above are not included in the cuts.

2. Provide shop drawings for each type of lamp, ballast, driver, power supply, controller, etc. specified and cross-referenced to the associated lighting fixture type.

3. Submit independent laboratory photometric data in the directed number of copies and in format as directed by Architect. Photometric data shall be submitted for standard, "off-the-shelf" units, at the time the manufacturer's cuts are submitted. Photometric testing and reporting shall conform to IES procedures.

4. Manufacturer's Catalogue Sheets shall indicate input and load electrical characteristics, ambient temperature rating, noise level rating, mounting methods and UL listing for use with required lamp.

5. Fluorescent fixture manufacturer shall submit (with fixture shop drawing or Catalogue Sheet) thermal test data for the fixture to prove that nuisance tripping of the Class "P" ballast shall not occur when fixture is operating under the following conditions:

   a. Voltage not exceeding 5 percent above nominal 120 or 277 volts.

   b. Room ambient of 77°F (25°C).

   c. Ceiling cavity ambient temperature for recessed installation shall not exceed 113°F (45°C).

1.8 SUBSTITUTIONS

A. No substitutions shall be permitted. The Contractor shall submit one of the fixtures listed for each fixture type as indicated on the lighting fixture schedule.

1.9 COORDINATION

A. The work of this Section shall be coordinated with other work of the Contractor. The placement of all access panels shall be coordinated with all other Trades and with the Architect.

PART 2 - PRODUCTS

2.1 GENERAL

A. Provide materials, equipment, appurtenances and workmanship for the work of this Section conforming to the highest commercial Standards as specified and indicated on the drawings. Make fixture parts and components not specifically identified or indicated on the drawings, of materials most appropriate to their use or function, and resistant to corrosion and to thermal and mechanical stresses encountered in the normal application and function of the fixtures.

B. Provide recessed fixtures that are constructed to be suitable for and compatible with the ceiling, wall or pavement materials and construction in which they shall be installed.

C. All recessed incandescent lighting fixtures shall be provided with thermal cutoff devices which shall conform to the requirements rated for control of incandescent lamps, as indicated by the NEC Article 410-65(c) and as specified by UL.

D. Each and every lighting fixture ballast shall be complete with accessible, individual fuse holder such as Bussman NLR fuse holder or approved equal.

2.2 MARKING OF FIXTURES

A. Plainly mark fixtures equipped with ballasts for operation of rapid start lamps "Use Rapid Start Lamps Only". Similarly, mark other fixtures according to proper lamp type. Clearly mark ballasts that have multi-level outputs as such, and indicate proper terminals for the various outputs. Provide markings that are clear and readily visible to service personnel, but invisible from normal viewing angles when lamps are in place.

2.3 MATERIALS AND FABRICATION

A. Provide fixtures, completely factory assembled, wired, and equipped with necessary sockets, ballasts, wiring, shielding, reflectors, channels, lenses and other parts and appurtenances necessary to complete the fixture installation and deliver to project site ready for installation.

2.4 FINISHES

A. Lighting fixture finishes shall be selected by the Architect. The Architect shall select finishes and indicate the color selections on the shop drawing submittals.

2.5 FIXTURE WIRING

A. Provide wiring channels and wireways free from projections and rough or sharp edges throughout. At points or edges over which conductors shall pass and may be subject to injury or wear, round bush to make a smooth contact surface with the conductors.

B. For all ballasted lighting fixtures, provide an accessible disconnecting means internal to the fixture per NEC Article 410.130. Disconnecting means shall simultaneously break all the supply conductors to the ballast, including the grounded conductor (neutral). The line side terminals of the disconnecting means shall be guarded.

C. Install insulated bushings at points of entrance and exit of flexible wiring.

2.6 FLUORESCENT BALLASTS (T8 AND ABOVE)

A. Fluorescent ballasts shall be electronic type and operate lamps at a frequency above 20k Hz with no visible flicker (<5% flicker index).

B. Ballast manufacturer shall have been producing electronic ballasts for at least ten (10) years with a low failure rate.

C. Ballast shall be specifically designed to operate the number and type of lamps for each fixture as indicated on the Lighting Fixture Schedule.

D. Ballasts shall operate at an input frequency of 60 Hz and an input voltage of 108 volts to 305 volts with no damage to the ballast.

E. Ballasts shall provide transient immunity as specified by the latest adopted edition of ANSI C82.41, Location Category A1.

F. Ballasts shall provide starting sequence consistent with the latest adopted edition of ANSI standard C82.11.

G. For lighting fixtures controlled by occupancy or vacancy sensors, ballasts shall be program start and may operate lamps in series. All other ballasts shall operate lamps in parallel, allowing remaining lamp(s) to maintain full light output if one or more lamps fail.

H. Ballasts shall tolerate sustained open circuit and short circuit output conditions without damage to the ballast.

I. Ballasts shall be UL Listed as Class P, and for use in indoor or Type 1 outdoor applications and shall contain a temperature sensing device that shall switch the ballast off if excessive internal temperature develops.

J. Ballasts shall tolerate operation in ambient temperatures up to 105 degrees F (40 degrees C) without damage.

K. Ballasts shall comply with limits of FCC Part 18, Subpart C Limits for Non-Consumer Equipment for EMI and RFI.

L. Ballasts shall have Power Factor greater than 0.90.

M. Lamp Current Crest Factor (ratio of peak to RMS lamp current) shall be 1.7 or less in accordance with lamp manufacturers recommendation and the latest adopted edition of ANSI C82.11.

N. All ballast shall have a normal Ballast Factor, unless indicated otherwise on the drawings, per the latest adopted edition of ANSI C82.11. Ballast Factor shall be as follows:

1. Low Ballast Factor: 0.77
2. Normal Ballast Factor: 0.87 – 0.90
3. High Ballast Factor: 1.18 – 1.20

O. Input current Total Harmonic Distortion shall not exceed 10%.

P. Ballasts shall be fully encapsulated (potted) to ensure maximum thermal and structural integrity and shall contain no PCBs.

Q. Ballasts shall not be affected by lamp failure and shall deliver normal lamp life.

R. Operating temperature shall not exceed 75°C at any point on the case during normal operation.

S. Ballasts shall be marked with manufacturer's name, part number, supply voltage, power factor, open circuit voltage, current draw for each lamp type and UL listing.

T. Ballast shall be high efficiency type as manufactured by:

1. Universal,
2. Osram Sylvania
3. Advance
4. General Electric

2.7 FLUORESCENT BALLASTS (T5 AND SMALLER)

A. Fluorescent ballasts shall be electronic type and operate lamps at a frequency above 20k Hz with no visible flicker (<5% flicker index).

B. Ballast manufacturer shall have been producing electronic ballasts for at least ten (10) years with a low failure rate.

C. Ballast shall be specifically designed to operate the number and type of lamps for each fixture as indicated on the Lighting Fixture Schedule.

D. Ballasts shall operate at an input frequency of 60 Hz and an input voltage of 108 volts 305 volts with no damage to the ballast.

E. Ballasts shall provide transient immunity as specified by the latest adopted edition of ANSI C82.41, Location Category A1.

F. Ballasts shall provide starting sequence consistent with the latest adopted edition of ANSI standard C82.11.

G. Ballasts shall operate lamps in series, allowing remaining lamp(s) to maintain full light output if one or more lamps fail.

H. Ballasts shall tolerate sustained open circuit and short circuit output conditions without damage to the ballast.

I. Ballasts shall be UL Listed as Class P, and for use in indoor or Type 1 outdoor applications and shall contain a temperature sensing device that shall switch the ballast off if excessive internal temperature develops.

J. Ballasts shall tolerate operation in ambient temperatures up to 105 degrees F (40 degrees C) without damage.

K. Ballasts shall comply with limits of FCC Part 18, Subpart C Limits for Non-Consumer Equipment for EMI and RFI.

L. Ballasts shall have Power Factor greater than 0.90.

M. Lamp Current Crest Factor (ratio of peak to RMS lamp current) shall be 1.7 or less in accordance with lamp manufacturers recommendation and ANSI C82.11-1993.

N. Ballast shall have a Ballast Factor of 1.0 per the latest adopted edition of ANSI C82.11.

O. Input current Total Harmonic Distortion shall not exceed 10%.

P. Ballasts shall be encapsulated (potted) to ensure maximum thermal and structural integrity and shall contain no PCBs.

Q. Operating temperature shall not exceed 75°C at any point on the case during normal operation.

R. Ballasts shall be marked with manufacturer's name, part number, supply voltage, power factor, open circuit voltage, current draw for each lamp type and UL listing.

S. Electronic ballasts operating T5 or smaller diameter lamps (including linear T5, compact fluorescent twin tube, triple tube or quad tube or T5 compact fluorescent) shall be high power factor IC type with integral, auto-resetting end-of-lamp-life detection circuitry.

T. Ballast shall be as manufactured by:

1. Universal,
2. Osram Sylvania
3. Advance
4. General Electric

2.8 HID LAMP BALLASTS

A. High intensity discharge lamp ballasts shall be core and coil ballasts designed in accordance with all applicable ANSI specifications including ANSI C84.2

B. The core and coil ballast shall be designed with class "H" (180 degrees C) or higher insulation system and by 100% solid based resin impregnated.

C. All coils shall be precision wound.

D. Core and coil ballasts shall be designed to operate at least 180 cycles of 12 hours on and 12 hours off, with the lamp circuit in an open or short-circuited condition and without undue reduction in ballast life.

E. Core and coil ballast and starter combinations shall be designed to provide reliable lamp starting down to -40 degrees C for high pressure sodium and -30 degrees C for metal halide lamps.

F. High intensity discharge lamp ballasts shall have an operating power factor of 0.90 or higher.

G. Capacitors shall be dry or oil filled with self-contained internal protective device and bleeder resistor.

H. Capacitors shall be housed in corrosion-resistant steel cans and contain 0.25" quick disconnect terminals.

I. Starters shall be epoxy filled with either a plastic or aluminum external housing.

J. Starters shall be designed to provide 6 months of lamp open circuit operation without failure.

K. All high intensity density lamp ballasts shall be UL listed per UL 1029.

L. Ballast shall be high efficiency type as manufactured by:

1. Universal,
2. Osram Sylvania
3. Advance
4. General Electric

2.9 LAMPHOLDERS

A. Provide incandescent and HID lamp sockets with porcelain housings over copper screw shells, with medium base sockets rated at 660 watt. Plastic or metal sheet sockets are not approved.

B. Provide fluorescent fixture sockets that are white, of heat resistant plastic and rated at 660 watt. Fluorescent lamp sockets operating with an open circuit voltage in excess of 300 volts shall be of the safety type which opens the supply circuit when the lamp is removed from the sockets.

C. Rigidly and securely attach lampholding sockets to the fixture enclosure or husk.

D. Provide sockets suitable for specified lamps, and set to position the lamps in optically correct spacing and relationship to lenses, reflectors, filters, and baffles.

E. Where fluorescent lamps are to be used "bare" without diffusers or lenses, provide at least (2) approved lamp retaining clips per fluorescent lamp for safety, and wire grounds over lamp housing.

2.10 LED LAMPS

A. Information to follow

2.11 INCANDESCENT LAMPS

A. Incandescent lamps shall have ratings as indicated on the lighting fixture schedule.

B. Lamps shall be as manufactured by Osram Sylvania, General Electric or Phillips Lighting.

2.12 FLUORESCENT LAMPS

A. Fluorescent lamps shall be Osram Sylvania Octron type, Philips "Octolume" or General Electric "Trimline", with ratings and lamp color as indicated on the lighting fixture schedule.

B. Compact fluorescent lamps shall have ratings as indicated on the lighting fixture schedule.

C. Fluorescent lamps shall have a color temperature of 3,500 degrees Kelvin. Compact fluorescent lamps shall have a minimum color rendition index (CRI) of 82. Biax fluorescent lamps and T8 fluorescent lamps shall have a minimum CRI of 85.

D. Lamps shall be as manufactured by Osram Sylvania, General Electric or Phillips Lighting.

E. Fluorescent lamps shall have the following minimum rated life span and maximum mercury content:

Fluorescent Lamp Type	**Minimum Rated Hours**	**Ballast Type**	**Maximum Mercury Content (mg)**
T-8 Eight-foot (Standard Output)	24,000*	Instant Start Program Start	10.0
T-8 Eight-foot (High Output)	18,000*	Instant Start Program Start	10.0
T-8 Four-foot (both Standard and High Output)	30,000*	Instant Start	3.5
T-8 Four-foot (both Standard and High Output)	36,000*	Program Start	3.5
T-8 Two-foot and Three-foot	24,000*	Instant Start Program Start	3.5
T-8 U-Bent	18,000*	Instant Start	6.0
T-8 U-Bent	24,000*	Program Start	6.0
T-5 (both Standard and High Output)	25,000*	Program Start	2.5
Compact fluorescent lamps	12,000	Non-integral	3.5
Compact fluorescent lamps	10,000	Integral, bare bulb	3.5
Compact fluorescent lamps	8,000	Integral, covered with globes, reflectors, etc.	3.5

* Based on 3 hour start.

2.13 HIGH INTENSITY DISCHARGE LAMPS

A. High intensity discharge lamps shall have ratings as indicated on the lighting fixture schedule.

B. Lamps shall be as manufactured by Osram Sylvania, General Electric or Phillips Lighting.

C. HID lamps shall have maximum mercury content as follows:

1. HID lamps less than, or equal to 400 watts: 10.0 mg.
2. HID lamps over 400 watts: 32.0 mg.

2.14 LENSES/FACEPLATES/TRIM

A. Where plastic lenses are indicated provide lenses of virgin methyl methacrylate, unless otherwise indicated.

B. Make lenses, louvers, or other light diffusing elements contained in frames removable, but positively held within the frames so that hinging or other motion of the frame shall not cause the diffusing element to drop out.

C. Provide faceplates on incandescent recessed fixtures which open for access to the interior of the fixture, serve as a ceiling trim, and are positively held to the fixture body by adjustable means that permit the faceplate to be drawn up to the ceiling as tight as necessary to ensure complete contact of faceplate with ceiling surrounding the fixture.

D. All recessed downlights in painted dry wall ceilings or acoustic tile ceilings shall have self-trimming reflectors with white flanges. All recessed downlights in perforated metal ceilings shall have self-trimming reflectors with no paint trim.

E. Refer to architectural plans to match trim styles. Coordinate trim styles with ceiling type.

2.15 EXTERIOR FIXTURES

A. Provide fixtures designed and manufactured specifically for outdoor service. Make components, including nuts, bolts, rivets, springs, and similar parts, of materials of effective corrosion resistance, or of materials which have been subjected to finishing treatment which shall ensure such resistance.

B. Provide fixtures for use outdoors or in areas designated as damp locations, which are suitably and effectively gasketed to prevent access of moisture into electrical components or enclosing diffusers, lenses or globes.

C. Provide metal parts of fixtures for use in outdoor or damp locations which are specified as requiring painting with suitable weather and moisture resisting qualities equal to epoxy-based coatings.

D. Provide anodized aluminum for aluminum parts of exterior fixtures which are not specified as requiring a painted finish.

2.16 LIGHTING FIXTURES

A. Refer to lighting fixture schedule on the drawings.

PART 3 - EXECUTION

3.1 COOPERATION AND WORK PROGRESS

A. The Electrical work shall be carried on under the usual construction conditions, in conjunction with all other work at the site. The Electrical Contractor shall cooperate with the Architect, Construction Manager, all other Subcontractors and equipment suppliers working at the site. The Electrical Contractor shall coordinate the work and proceed in a manner so as not to delay the progress of the project.

B. The Electrical Contractor shall coordinate his work with the progress of the building and other Trades so that he will complete his work as soon as conditions permit and such that interruptions of the building functions will be at a minimum. Any overtime hours worked or additional costs incurred due to lack of or improper coordination with other Trades or the Owner by the Electrical Contractor shall be assumed by him without any additional cost to the Owner.

C. The Electrical Contractor shall furnish information on all equipment that is furnished under this Section but installed under another Section to the installing Subcontractor as specified herein.

D. The Electrical Contractor shall provide all materials, equipment and workmanship to provide for adequate protection of all electrical equipment during the course of construction of the project. This shall also include protection from moisture and all foreign matter. The Electrical Contractor shall also be responsible for damage which he causes to the work of other Trades, and he shall remedy such injury at his own expense.

E. Waste materials shall be removed promptly from the premises. All material and equipment stored on the premises shall be kept in a neat and orderly fashion. Material or equipment shall not be stored where exposed to the weather. The Electrical Contractor shall be responsible for the security, safekeeping and damages, including acts of vandalism, of all material and equipment stored at the job site.

F. The Electrical Contractor shall be responsible for unloading all electrical equipment and materials delivered to the site. This shall also include all large and heavy items or equipment which require hoisting. Consult with the Construction Manager for hoisting/crane requirements. During construction of the building, the Electrical Contractor shall provide additional protection against moisture, dust accumulation and physical damage of the main service and distribution equipment. This shall include furnishing and installing temporary heaters within these units, as approved, to evaporate excessive moisture and ventilate it from the room, as may be required.

G. It shall be the responsibility of the Electrical Contractor to coordinate the delivery of the electrical equipment to the project prior to the time installation of equipment will be required; but he shall also make sure such equipment is not delivered too far in advance

of such required installation, to ensure that possible damage and deterioration of such equipment will not occur. Such equipment stored for an excessively long period of time (as determined in the opinion of the Architect) on the project site prior to installation may be subject to rejection by the Architect.

H. The Electrical Contractor shall erect and maintain, at all times, necessary safeguards for the protection of life and property of the Owner, Workmen, Staff and the Public.

I. Prior to installation, the Electrical Contractor has the responsibility to coordinate the exact mounting arrangement and location of electrical equipment to allow proper space requirements as indicated in the NEC. Particular attention shall be given in the field to group installations. If it is questionable that sufficient space, conflict with the work of other Subcontractors, architectural or structural obstructions will result in an arrangement which will prevent proper access, operation or maintenance of the indicated equipment, the Electrical Contractor shall immediately notify the Contractor and not proceed with this part of the Contract work until definite instructions have been given to him by the Architect.

3.2 INSTALLATION

A. General

1. Unless specifically noted or indicated otherwise, all equipment and material specified in Part 2 of this specification or indicated on the drawings shall be installed under this Contract whether or not specifically itemized herein. This Section covers particular installation methods and requirements peculiar to certain items and classes or material and equipment.

2. The Electrical Contractor shall obtain detailed information from manufacturers of equipment provided under Part 2 of this specification as to proper methods of installation.

3. The Electrical Contractor shall obtain final rough-in dimensions and other information as needed for complete installation of items furnished under other Sections or furnished by the Owner.

4. The Electrical Contractor shall keep fully informed of size, shape and position of openings required for material and equipment provided under this and other Sections. Ensure that openings required for work of this Section are coordinated with work of other Sections. Provide cutting and patching as necessary.

5. All miscellaneous hardware and support accessories, including support rods, nuts, bolts, screws and other such items, shall be of a galvanized or cadmium plated finish or of another approved rust-inhibiting coating.

6. Throughout this Section where reference is made to steel channel supports, it shall be understood to mean that the minimum size shall be 1 5/8" mild strip steel with minimum wall thickness of 0.105", similar to Unistrut P1000 or equal products manufactured by Kindorf or Husky Products Co. Where reference to channel supports is made under "Lighting Fixtures" paragraph of this Section, the

maximum length of span shall be 10'-0". If longer spans are required, the size and wall thickness of the steel channel support shall be as specifically approved by the Engineer.

B. Lighting Fixtures

1. Furnish, assemble, hang and connect all lighting fixtures. Lighting fixtures shall be as indicated on the drawings.

2. Install each fixture properly and safely. Provide hangers, rods, mounting brackets, supports, frames, yokes, support bars and any other equipment required for a complete installation. Refer to Section 260510 for Hangers and Supports.

3. Lay-in recessed fixtures in grid type ceilings shall be supported from the underside of roof or floor slab, and utilize hangers, as indicated in Section 260510, with attachments to building construction independent of other systems. All fluorescent fixtures shall have a minimum of (2) hangers supports and all incandescent fixtures shall have at least one hanger support. Hanger wire will not be acceptable.

4. All lighting fixtures shall be supported from the slab above and shall not be suspended from ducts, piping, equipment, ceiling support system, etc.

5. Where continuous rows of lighting fixtures are installed (pendant mounted), the Electrical Contractor shall furnish and install appropriate mounting channels to properly align fixtures. Use Kindorf or Unistrut channels.

6. Before ordering fixtures, the Electrical Contractor shall verify with the Construction Manager the type of ceilings which shall be used in the various spaces.

7. Coordinate fixture locations and mounting heights with Architectural plans, reflected ceiling plans and other reference data prior to installation.

8. Do not scale electrical drawings for exact location of the lighting fixtures. Consult the architectural reflected ceiling plans for the proper locations of lighting fixtures.

9. Prior to fabrication and submittal of shop drawings, check for adequate headroom and non-interference with other equipment such as ducts, pipes or openings.

10. Pendant or surface mounted fixtures shall be provided with required mounting devices and accessories, including hickeys, stud extensions, ball aligners, canopies and stems. Locations of fixtures in mechanical areas shall be coordinated with the Mechanical Contractor. Mounting stems of pendant fixtures shall be of the correct length to uniformly maintain the fixture heights shown on the drawings. Variation in mounting individual fixtures shall not exceed 1/4 inch. Height shall not vary more than 1/2 inch from the floor mounting height shown on the drawings. Fixtures hung in continuous runs shall be installed absolutely level and in line with each other. Hanging devices shall comply with Code

requirements. Use single stem hangers (double stem hangers shall not be acceptable). Threaded rods shall be used to support lighting fixtures in those spaces where no other means of support is attainable, and only if fixtures are installed absolutely level with no looseness for movement, and only if approved by Code.

11. Rigidly align continuous rows of lighting fixtures for true in-line appearance, subject to Architect's approval.

12. Install pendant lighting fixtures plumb and at a height from the floor as specified or indicated on the drawings. In cases where conditions make this impractical, refer to the Architect and install as directed. Use ball aligners and canopies on pendant fixtures unless noted otherwise.

13. Do not install fixtures and/or parts such as finishing plates and trims for recessed fixtures until all plastering and painting that may mar fittings finish has been completed.

14. Housings shall be rigidly installed and adjusted to a neat flush fit with the ceiling or other finished mounting surface.

15. The housings of recessed lighting fixtures shall be adequately protected during installation.

16. Install reflector cones, baffles, aperture plates, light controlling element for air handling fixtures, and decorative elements after completion of ceiling tiles, painting and general cleanup.

17. All adjustable and aimable fixtures shall have final adjustment and aiming performed in the presence of and per the direction of the Architect.

18. Replace blemished, damaged or unsatisfactory fixtures as directed.

19. Exterior poles, bases and any other fixture or fixture components with scratched or damaged finish shall be repainted to match specified color. Pole mounted fixtures shall be provided with inline fuses located in base.

20. Any lamps, ballasts, reflectors, lens, diffusers, side panels or other parts damaged prior to the final inspection shall be replaced at no expense to the Owner.

21. At time of final inspection, all fixtures and equipment shall be fully lamped, and shall be complete with required lenses or diffusers, reflectors, side panels, louvers or other components necessary.

22. Each lighting fixture shall be packaged with complete instructions and illustrations showing how to install. Install lighting fixtures in strict conformance with manufacturer's recommendation and instructions.

23. Provide fixtures constructed, wired and installed in compliance with the current edition of applicable City, State and National Codes. Provide fixtures conforming

to UL Standards, and to provisions of applicable Codes which exceed those Standards. In addition, provide fixtures which conform to additional Regulations necessary to obtain approval for use of specified fixtures in locations shown. Use only electrical components UL listed.

24. Particular attention is called to Article 410 of the NEC. Provide only fixtures that meet these requirements, as interpreted by local agencies. As manufacturers' catalogue numbers may not include thermal protection devices, it is Contractor's responsibility to coordinate the fixture provided with the ceiling construction in accordance with Local Code enforcement practice.

25. Mounting of all lighting fixtures shall conform to seismic requirements.

3.3 MATERIALS AND WORKMANSHIP

A. All materials and equipment shall be new and unused and shall meet requirements of the latest Standards of NEMA, UL, IPCEA, ANSI and IEEE. Equipment shall have components required or recommended by OSHA, applicable NFPA documents and shall be UL listed and labeled.

B. Despite references in the specifications or on the drawings to materials or pieces of equipment by name, make or catalog number, such references shall be interpreted as establishing standards of quality for materials and performance.

C. Finish of materials, components and equipment shall not be less than Industry good practice. When material or equipment is visible or subject to corrosive or atmospheric conditions, the finish shall be as approved by the Architect.

D. Provide proper access to material or equipment that requires inspection, replacement, repair or service. If proper access cannot be provided, confer with the Architect as to the best method of approach to minimize effects of reduced access.

E. All work shall be installed in a neat and workmanlike manner and shall be done in accordance with all Local and State Codes.

F. The Owner will not be responsible for material, equipment or the installation of same before testing and acceptance.

END OF SECTION

SECTION 265100

ARCHITECTURAL LIGHTING

PART 1 GENERAL

1.1 SUMMARY

A. Work of this Section consists of Architectural Lighting, and includes but is not limited to the following:

1. Interior lighting fixtures with lamps and ballasts/drivers
2. Exterior lighting fixtures with lamps and ballasts/drivers, mounted to exterior building surfaces/structures and within the site/landscape
3. Luminaire Schedule, including indication of Lighting Add Alternate fixtures

B. Related Documents and Sections: Examine Contract Documents for requirements that directly affect or are affected by Work of this Section. A list of those Documents and Sections includes, but is not limited to the following:

1. Drawings and general provisions of the Contract, including General and Supplementary conditions and General Requirements, Division 01 Specification Sections, apply to this Section.
2. Division 26 Section “Emergency Lighting”
3. Division 26 Section “Exit signs”
4. Division 26 Section "Lighting Controls" for manual or programmable control systems employing low-voltage control wiring or data communication circuits.
5. Division 26 Section "Wiring Devices" for manual wall-box dimmers.
6. Division 26 Section "Lighting Control Devices" for automatic control of lighting, including time switches, photoelectric relays, occupancy sensors, and multiple lighting relays and contactors.
7. Division 26 Section "Dimming Controls" for architectural dimming systems.
8. Division 26 Section “Wire and Cables”
9. Division 26 Section "Basic Electrical Materials and Methods.”

C. LEED Building General Requirements: Implement practices and procedures to meet the project’s environmental goals, which include achieving a LEED™ 2009 New Construction Silver rating. Specific project goals which may impact this and the other sections of this specification include: use of recycled-content materials; use of locally-manufactured materials; use of low-emitting materials; use of certified wood products; construction waste recycling; and the implementation of a construction indoor air quality management plan. Ensure that the requirements related to these goals, as defined in this Section and other Sections of the contract documents, are implemented to the fullest extent. Substitutions or other changes to the work shall not be allowed if such changes substantially compromise the stated LEED Building criteria.

Comply with LEED (Leadership in Energy and Environmental Design) Green Building Rating

system BD+C, Version 3, Silver.

1.2 DEFINITIONS

A. Fixture: The elements of a luminaire that are designed to distribute the light, and to position and protect the lamps.

B. Luminaire: A complete lighting unit consisting of a lamp or lamps and drivers/ballasts (when applicable) together with the parts designed to distribute the light, to position and protect the lamps and to connect the lamps to the power supply.

C. Lighting Unit: A fixture or an assembly of fixtures with a common support, including a pole or bracket plus mounting and support accessories.

D. Average Rated Life: The time after which 50 percent of the lamps fail and 50 percent of the lamps survive under normal conditions.

E. Rated Lumen-maintenance Life (LED light sources): The elapsed operating time at which the specified percentage of the lumen depreciation or lumen maintenance is reached, expressed in hours. Measured in hours with associated percentage of light output, noted as Lp. e.g. L70 of 50,000 hours means that the tested LEDs produce 70% of the initial light output at 50,000 hours.

F. BF: Ballast factor. Ratio of light output of a given lamp(s) operated by the subject ballast to the light output of the same lamp(s) when operated on an ANSI reference circuit.

G. CRI: Color rendering index.

H. CU: Coefficient of utilization.

I. LER: Luminaire efficiency rating, which is calculated according to NEMA LE 5. This value can be estimated from photometric data using the following formula:

1. LER is equal to the product of total rated lamp lumens times BF times luminaire efficiency, divided by input watts.

J. RCR: Room cavity ratio.

1.3 QUALITY ASSURANCE

A. Fixture Materials: Provide fixture parts and components that are constructed of materials most appropriate to their use or function, and that are resistant to corrosion in a marine environment and mechanical stresses encountered in the normal application and function of the fixtures.

B. Manufacturers: Provide fixtures from manufacturers making like products for not less than five years prior to bid.

C. Electrical Component Standard: Provide components that comply with NFPA 70 and that are

listed and labeled by UL.

D. Listing and Labeling: Provide fixtures and accessory components specified in this Section that are listed and labeled for their indicated use and installation conditions on Project.

1. Special Listing and Labeling: Provide fixtures for use in damp or wet locations, and recessed in combustible construction, that are specifically listed and labeled for such use. Provide fixtures for use in hazardous (classified) locations that are listed and labeled for the specific hazard.
2. The Terms "Listed" and "Labeled": As defined in the National Electrical Code, Article 100.
3. Listing and Labeling Agency Qualifications: A "Nationally Recognized Testing Laboratory" (NRTL) as defined in OSHA Regulation 1910.7.

E. Applicable Codes: Fixtures shall be made and installed in accordance with the current version of the National Electric Code, the Uniform Building Code, the Federal Occupational Safety & Health Act, local codes, and other applicable regulations.

F. Measuring and Testing Equipment: Instruments for the measurement of voltage, luminaire temperature, lighting level and fixture brightness level shall be available at all times on the site.

1.4 BIDS & SUBMITTALS

A. General: Submit each item in this Article according to the Conditions of the Contract and Division 1 Specification Sections, unless noted otherwise.

1. Bids and submittals shall include itemized unit pricing by fixture type, as labeled in the Luminaire Schedule and Drawings. Unit pricing shall describe any special conditions, such as an adder for custom colors, quantity discount, special warranties, etc.

B. Substitutions:

1. Where multiple names are included in specification provide one of the specified manufacturers wherever possible.
2. Contractor-offered substitutions beyond those named within the Luminaire Schedule in this Section must meet or exceed the aesthetic, dimensional and performance characteristics of the specified products. The lighting designer reserves the right to reject substitution submittals that do not meet the requirements of the application. In that event one of the specified products would have to be resubmitted.
3. Some luminaires included in this specification are unique designs, available only from the specified manufacturer. No attempt shall be made to solicit bids from other manufacturers to copy or “knock-off” these luminaires.
4. Some luminaires included in this specification are listed as having no alternate manufacturers. Where this is the case, it is because the lighting designer was unable to find a product for specification that met the requirements of the application. In these cases, the Contractor shall submit the specified product.

C. Product Data: Fixtures, lamps, ballasts, drivers and mounting components. Arrange Product Data for fixtures in order of fixture type, as labeled in the Luminaire Schedule. Include data on features and accessories and the following:

1. Outline drawings indicating dimensions and principal features of fixtures.
2. Electrical Ratings and Photometric Data: Certified results of independent laboratory tests for fixtures and lamps. Provide data for the specified lamp or lamp/ballast combination.
3. Lamp Data: Manufacturer, ordering code and technical information.
4. Ballast/Driver Data: Manufacturer, ordering code and technical data showing compliance with requirements.

    a. Where a fixture manufacturer will utilize ballasts/drivers from multiple manufacturers depending on availability, technical data must indicate the minimum characteristics that will be met in all cases. In the case of system input watts, the technical data must indicate the maximum wattage that will be met in all cases.
        i. In order to assure compliance with energy codes and to achieve calculated illumination levels, ballast factor and input watts may not vary from the specification.
        ii. Submittal Data must include information on ballast starting type, ballast factor and input watts.
    b. Manufacturer is responsible for confirming that the submitted ballast/driver products work within the fixture in terms of case size and wire lead lengths.
    c. Where remote ballasts/drivers have limitations in distance, manufacturer shall clearly indicate maximum wire lead distance and any other requirements necessary to allow the ballast mounting locations to be properly coordinated by the Contractor.

D. Provide data as required to demonstrate that the submitted product meets or exceeds the performance of the specified fixture.

1. Include photometric data charts: C.U., candlepower distribution and/or luminance information as necessary.
2. Where technical charts alone cannot substantiate compliance, the submitting manufacturer may be required to provide a full photometric study of a specific project application for verification.

E. Scaled shop drawings detailing nonstandard fixtures and indicating dimensions, weights, method of field assembly, components, features, and accessories. Details shall be scaled at not less than half full size.

1. Scaled shop drawings of continuous run fixtures shall indicate overall length of each run, lamp combinations used to achieve the length and any accessory components required.
    a. Track and illuminated handrails are considered continuous run fixtures

F. Wiring diagrams detailing wiring for control system coordination showing both factory-installed and field-installed wiring for specific system of this Project, and differentiating between factory-installed and field-installed wiring.

G. Coordination Drawings showing fixtures mounted on, in, or above ceiling. Indicate coordination with ceiling grids and other equipment installed in vicinity.

H. Product certificates signed by manufacturers of lighting fixtures certifying that their products comply with specified requirements.

I. Field test reports indicating and interpreting test results specified in Part 3 of this Section.

J. Maintenance data for fixtures, lamps and ballasts, to include in the operation and maintenance manual specified in Division 1.

1. Data shall include warranty information, lamp and ballast life and replacement costs, as well as other fixture information required in Division 1.

1.5 WARRANTY

A. General Warranty: The special warranty specified in this Article shall be in addition to, and run concurrent with, other warranties made under requirements of the Contract Documents.

B. Special Warranty for Exterior Luminaire Finish: Submit a written warranty signed by manufacturer and Installer agreeing to replace external parts of lighting fixtures exhibiting a failure of finish as specified below. This warranty is in addition to, and not a limitation of, other rights and remedies specified elsewhere within the Contract Documents.

1. Protection of Metal from Corrosion: Warranty against perforation or erosion of finish due to weathering.
2. Color Retention: Warranty against fading, staining, and chalking due to effects of weather and solar radiation.
3. Special Warranty Period: 5 years from date of Substantial Completion.

C. LED Fixture Warranties: Warrant complete LED systems, including LEDs, drivers, and all other system components for 5 years minimum against failure, variation in color temperature beyond plus/minus 200K, and depreciation of output below 70%.

1.6 DELIVERY, STORAGE AND HANDLING

A. Delivery: Luminaires and lighting equipment shall be delivered to the project complete, including mounting devices, lamps and components necessary for the proper operation of the equipment.

B. Marking: All equipment must be clearly and boldly identified as to the fixture type and, where practicable, the fixture location.

1. Voltage identification: Fixtures designed for voltages other than 110-125 volt circuits shall be clearly marked.
2. Lamp/ballast coordination: Fixtures equipped with ballasts for operation of rapid start lamps shall be plainly marked "Use Rapid Start Lamps Only". Similarly, fixtures equipped

with ballasts or other components requiring use of specific types of lamps shall be plainly marked. Markings must be clear and shall be located to be readily visible to service personnel but invisible from normal viewing angles when lamps are in place.

C. Timely Purchase: Luminaires, associated lamps and other allied equipment shall be ordered in a timely fashion and securely stored to be available to meet the project schedule.

D. Storage: Contractor shall store all fixtures in locations where they will be protected against damage due to moisture, dust, extreme temperatures and/or the work of other project construction trades.

1.7 EXTRA MATERIALS

A. Furnish extra materials described below that match products installed, are packaged with protective covering for storage, and are identified with labels describing contents.

1. Lamps: 10 lamps for every 100 of each type and rating installed. Furnish at least one of each type.
2. Diffusers and Lenses: 1 for every 100 of each type and rating installed. Furnish at least one of each type.
3. Ballasts, Transformers and Drivers: 1 for every 100 of each type and rating installed. Furnish at least one of each type.
4. Globes and Guards: 1 for every 20 of each type and rating installed. Furnish at least one of each type.
5. Louvers and Reflector Cones: 1 for every 100 of each type. Furnish at least one of each type.
6. Custom Luminaires: When 10 identical custom fixtures are furnished, furnish one complete spare custom fixture as attic stock.
7. LED Modules: 1 for every 50 of the same type, from the same production run as the installed products. In lieu of this requirement, manufacturer must retain attic stock of specified modules (or compatible modules with similar output) for a minimum of 20 years. Diffusers and Lenses: 1 for every 100 of each type and rating installed. Furnish at least one of each type.
8. Tools: Furnish manufacturer's recommended number of each tool required to service and maintain the fixtures.

PART 2 PRODUCTS

2.1 MANUFACTURERS

A. Available Products: For lighting fixtures to be incorporated into the Work, see the products specified in the Luminaire Schedule at end of this Section.

2.2 FIXTURES AND FIXTURE COMPONENTS, GENERAL

A. Sheet Metal Components: Provide the required dimensional thickness of metal, plastic and composite materials so that all fixtures are rigid, stable and will resist deflection, twisting,

warping under normal installation, and relamping procedures.

1. All luminaire housings shall be minimum 0.84mm cold rolled steel, unless a heavier gauge is specified or required by code.
2. All aluminum extrusion housings shall be minimum 5mm thick.
3. All spun, hydro-formed or sheet aluminum reflectors shall be fabricated from #12 aluminum sheets minimum, 1.45mm or heavier. Material shall be 3002 alloy, 99.5% pure aluminum with uniform grain structure.
4. All spun aluminum housings shall be of an alloy of the 5000 series (ANSI/ASTM-B209-1977) or of an alloy that is found to have equal corrosion resistance.

B. Joints: Provide positive, durable, means of connection at all joints as required. No hollow rivets, unless specifically approved.

C. Gaskets: Provide neoprene, silicone, rubber, or other appropriate gaskets, stops, and barriers where required to prevent light leak, control sound and vibration, prevent water leaks and, if pertinent, water vapor penetration.

D. Edges: Provide finished product with the following minimum qualities:

1. Ground and/or burr free metal edges.
2. Tight fitting connections, hinges and closures.
3. Clean neat corners, edges, trims and frames.

E. Castings: All cast parts, including die-cast members, shall be of uniform quality; free from blow holes, pores, hard spots, shrinkage defects, cracks and or other imperfections that affect strength and appearance, or are indicative of inferior metals or alloys.

F. Reflecting Surfaces: Minimum reflectance as follows, except as otherwise indicated:

1. White Surfaces: 85 percent.
2. Specular Surfaces: 83 percent.
3. Diffusing Specular Surfaces: 75 percent.
4. Laminated Silver Metallic Film: 90 percent.

G. Lenses, Diffusers, Covers, and Globes: 100 percent virgin acrylic plastic or water-white, annealed crystal glass, except as otherwise indicated. Soda-lime glass lenses are not acceptable. Heat resistant where required: borosilicate or Pyrex glass.

1. Plastic: High resistance to yellowing and other changes due to aging, exposure to heat, and UV radiation.
2. Lens Thickness: 0.125 inch (3 mm) minimum; except where greater thickness is indicated.

H. Doors, Frames, and Other Internal Access: Smooth operating, free from light leakage under operating conditions, and arranged to permit relamping without use of tools. Arrange doors, frames, lenses, diffusers, and other pieces to prevent accidental falling during relamping and when secured in operating position.

I. Fixture Support Components: Comply with Specification Section on "Basic Electrical Materials and Methods."

1. Single-Stem Hangers: 1/2-inch (12-mm) steel tubing with swivel ball fitting and ceiling canopy. Finish same as fixture.
2. Twin-Stem Hangers: Two, 1/2-inch (12-mm) steel tubes with single canopy arranged to mount a single fixture. Finish same as fixture.
3. Rod Hangers: 3/16-inch (5-mm) minimum diameter, cadmium-plated, threaded steel rod.
4. Hook Hanger: Integrated assembly matched to fixture and line voltage and equipped with threaded attachment, cord, and locking-type plug.
5. Aircraft cable: Minimum 1/16" diameter aircraft cable, 48" length, field adjustable, with canopy size to match at feed and non-feed locations, and 18/3, 18/4 or 18/5 straight flexible cord, U.O.N. Canopy finish to match ceiling.

J. Track-Lighting Systems: Provide components, including track, fittings, and fixtures, from same manufacturer and as recommended by manufacturer for intended use.

1. Maintain a continuity of conductors through feeds, splices, and boxes. The relative positions of live and neutral conductors must always be maintained along a continuous run so that track fittings connect into the track in a consistent manner.
2. Install surface mounted track straight and true regardless of the ceiling contour.

K. Pole-mounted Fixtures: Provide reinforcement for all exterior pole mounted luminaires in accordance with manufacturer's recommendations. Reinforcement shall be designed to prevent overturning or permanent deflection in winds up to 160 km/hr. with a gust factor of 1.3, or in winds equal to the local maximum annual wind velocity, whichever is greater. Existing soil conditions should be taken into account. Include in submissions details of all pole reinforcements for approval by Structural Engineer.

1. Conform to AASHTO LTS-3.
2. Arm, Bracket, and Tenon Mount Materials: Match pole's finish.
3. Mountings, Fastenings, and Appurtenances: Corrosion-resistant items compatible with support components. Use materials that will not cause galvanic action at contact points. Use mountings that correctly position luminaire to provide indicated light distribution.
4. Pole Shafts: As indicated.
5. Pole Bases: Anchor type with galvanized steel hold-down or anchor bolts, leveling nuts, and bolt covers.
6. Steel Poles: Conforming to ASTM A 500, Grade B, carbon steel with a minimum yield of 46,000 psi (317 MPa), unless otherwise indicated. Poles are 1-piece construction up to 12 m in length.
7. Cast Iron Poles: 1-piece heavy wall construction, ASTM A 48-83 Class 30. Provide access handhole in pole base.
8. Metal Pole Grounding Provisions: Welded ½ inch (12 mm) threaded lug, accessible through handhole.
9. Metal Pole Brackets: Designed to match pole metal.

10. **Pole-Top Tenons: Fabricated to support fixture or fixtures and brackets indicated and securely fastened to pole top.**
11. **Concrete for Pole Foundations: Comply with Division 3 Section "Cast-in Place Concrete." Use 3000 psig (20.7-MPa) strength, 28 day concrete.**

2.3 FINISHES

A. Manufacturer's standard, except as otherwise indicated, applied over corrosion-resistant treatment or primer, free of streaks, runs, holidays, stains, blisters, and similar defects.

1. Prior to finishing, all surfaces must be free from foreign materials such as dirt, rust, oil, polishing compounds and mold release agents.
2. Where necessary, surface cleaned by accepted chemical means shall receive corrosion inhibiting phosphating treatment assuring positive paint adhesion.
3. All castings and extrusions shall be machined, sanded or similarly treated, and given minimum one coat of baked-on clear methacrylate lacquer, unless a painted finish is specified.
4. Aluminum surfaces exposed to weather (other than anodized reflectors covered elsewhere) receive a duronodic or polyester powder paint finish as specified for corrosion resistance.
5. Sheet steel fixture housings, iron and steel parts, which have not received phosphating treatment ("Bonderizing" or similar process) or are to be utilized in exterior applications, are to be made corrosion resistant by zinc or cadmium plating or hot-dip galvanizing. All plating or hot-dipping shall be performed after parts are fabricated.
6. Anodized aluminum reflectors required for exterior use shall have a minimum of 0.2 mils anodizing thickness
7. Anodized reflectors for interior use shall have a minimum of .006mm (.25mils) anodizing thickness for clear reflectors. Specular reflectors shall have 86% to 91% reflectivity. All reflectors shall be double sealed, first in Nickel Acetate and then in Sandoz Andal sealant at a minimum of 208 deg. All Specular reflectors shall meet or exceed the specification for the Alzak process.

2.4 LAMPS

A. Available Products: Lamps of the same type (such as all linear fluorescent lamps) shall be supplied from the same manufacturer. Where a specific lamp manufacturer has been indicated in the Luminaire Schedule within this Section, lamps shall be supplied from the named manufacturer only, unless approval for specific substitutions is requested by the Contractor and granted by the Lighting Designer.

1. Provide linear fluorescent lamps of different lengths manufactured at the same factory.

B. Fluorescent Color Temperature (CCT) and Minimum Color-Rendering Index (CRI): 3000 K and 85 CRI, except as otherwise indicated. Provide fluorescent lamps from Philips or Osram Sylvania.

C. Non-compact Fluorescent Lamp Life: Minimum average rated life of 24,000 hours for T8, at 3 hours per start when used on rapid start circuits. T5 lamps are not being used and therefore are

not permitted on this Project.

D. Environmentally Responsible Lamp Technology: Use only fluorescent sources that are low mercury and TCLP-compliant, except where not available in a specified lamp type.

E. Lamp Burn-in Period: Fluorescent lamps that are specified for dimming shall be burned-in, or run continuously in a non-dim state, for a period of 100 hours prior to dimming the lamps.

F. Solid State Lighting / Light Emitting Diodes (LEDs):

1. All individual LEDs used within a luminaire must be manufactured by a reputable LED manufacturer, such as Cree, Osram Sylvania, Nichia, Philips (Lumileds) or approved equal. LED modules shall be manufactured by Bridgelux, Philips (Fortimo) or Xicato.

2. Testing: All products shall be tested by a Nationally Recognized Testing Laboratory (NRTL) in accordance with IES LM-79 testing methods and shall carry a UL, ETL or CSA label. Fixture manufacturer shall confirm in writing that the LEDs within the fixture will not exceed the maximum temperature to which the LED die was tested using IES LM-80 testing methods.

3. Drive Current, Thermal Management and LED rated Life: Drivers must not over-drive the LEDs beyond LED manufacturer's recommendations and shall adhere to device manufacturer guidelines, certification programs, and test procedures for thermal management of LEDs within their fixtures. Drive current and luminaire thermal design must ensure minimum 50,000 hour rated life for the LEDs.

4. Color Consistency: All LEDs from the same manufacturer, both within each luminaire and from luminaire to luminaire, must be batch-sorted for visual color and brightness consistency. All luminaires of the same type shall be supplied at the same time and shall come from the same batch. Spare luminaires shall be provided from the same batch.

5. Dimming: Luminaire manufacturer must provide specific data on the means of dimming for coordination of the proper control device (specified elsewhere). Acceptable methods include electronic low voltage dimming and 0-10V 4-wire dimming protocol. Dimming must provide uniform, smooth, full-range dimming. LEDs must maintain consistent brightness and color throughout the dimming range.

6. Technology Upgrades: Supply the newest LED technologies that are available for the specified products when the orders are released, as long as there are no increases in input watts or cost.

7. Warranty: See Part 1.5 C. above for the warranty requirement for LED luminaire systems.

2.5 LAMP HOLDERS

A. Screw base: Screw base sockets for incandescent and metallic vapor lamps shall be of heavy duty heat resistant porcelain with spring center contacts and plated screw shells. For ceramic metal

halide lamps with electronic ballasts, provide minimum 4KV pulse rated lampholders.

2.6 BALLASTS

A. Fluorescent Ballasts: Electronic integrated circuit, solid-state, full-light-output, energy-efficient programmed rapid start type, unless otherwise indicated; must be compatible with lamps and lamp combinations to which connected.

1. Underwriters Laboratories (UL) listed, Class P, Type 1 – Outdoor and CSA Certified where applicable.
2. Operating Voltage: Match system voltage, or universal voltage, from a 50/60 Hz input source, and sustained variations of ± 10 percent (voltage & frequency) with no damage to the ballasts.
3. Ballast shall be programmed rapid start, unless otherwise indicated. Ballast starting parameters shall be consistent with lamp manufacturer's recommendations and shall provide full rated lamp life under normal operating conditions.
4. Ballast shall have audible noise rating of Class "A" except as otherwise indicated.
5. Voltage: Match connected circuits.
6. Lamp Flicker: Less than 3 percent.
7. Minimum Power Factor: 95 percent.
8. Total Harmonic Distortion (THD) of Ballast Current: 10% or less, 20% or less for dimming.
9. Ballast shall tolerate sustained open and short circuit output conditions without damage.
10. Lamp Current Crest Factor: 1.7 or less in accordance with ANSI C82.11-1993
11. Minimum Ballast Factor (relative light output): 88 percent for T8 lamps, 98 percent for T5 compact fluorescent, 97 percent for all T4 compact fluorescent, and 100 percent for linear T5/T5HO.
12. Minimum Starting Temperature: 0° F, -18° C, 50° F, 10° C for dimming.
13. Ballast shall provide transient immunity as recommended by ANSI C62.42-1991.
14. Lamp-ballast connection method shall not reduce normal rated life of lamps.
15. Ballast shall comply with all applicable local, state, and federal efficiency standards.
16. Ballasts shall comply with FCC Title 47 CFR Part 18 non-consumer RFI/EMI standards.
17. Ballasts shall be Reduction of Hazardous Substances (RoHS) compliant.
18. Ballasts shall not have any PCBs.
19. Ballasts for lamps of 5/8" diameter and smaller, including ballasts for CFL lamps, shall incorporate auto resetting lamp shut down circuitry for end of lamp life protection.
20. Low-Temperature Fluorescent Ballasts: Comply with above requirements; ballasts for high output lamps shall be electronic, ballasts for other lamps may be Class P electromagnetic type. Starting temperature shall be minus 20 deg. F or colder, or the minimum available depending on lamp type.
21. Dimming Ballasts: Electronic rapid start type providing smooth dimming over a minimum range from 100 down to 1 percent measured relative light output, for architectural dimming, and 100 down to 10 percent for other applications (unless otherwise specified). Listed for use with specific fluorescent dimming system provided.
22. Remote Ballasts: Where ballasts must be mounted remotely from fixtures, provide locations that fall within the manufacturer's recommended distance limitations.
23. Manufacturer shall have been manufacturing electronic ballasts for at least 15 years.

24. The manufacturer shall provide a five-year written warranty against defects in material or workmanship, including replacement.

2.7 TRANSFORMERS

A. Suitability: Transformers shall be of the best quality and meet the following requirements:

1. Where possible transformers shall have an integral line voltage switch.
2. All transformers shall be locally fused or have secondary side breakers.
3. Provide adequate ventilation to meet code and manufacturers requirements concerning temperature rise.
4. Remote transformer quantities and sizes for low voltage lighting shall be coordinated/ determined according to final loads based on final lighting fixtures and control zones specified for the project. Each fixture shall require a separate feed from the transformer to the lighting fixture. Feed lengths to lighting fixtures within a zone shall be uniform in length, or each run sized accordingly to provide a uniform voltage to all fixtures; excess wiring shall not be coiled. Acceptable voltage supplied at the fixture shall not exceed the rated lamp voltage nor drop more than 5% below that rated voltage. All wiring from transformers to low voltage lighting fixtures shall be sized to compensate for voltage drop, which will be determined by the load, voltage, and length of run, based on the final coordinated accessible location of the remote transformer. All transformers shall be suitable for dimming their primary side, via a remote lighting control system.

2.8 LED DRIVERS

A. Provide line voltage LED product, where available, to eliminate the need for drivers. If the LED product is not available as line voltage, then the LED drivers shall meet the following requirements:

1. Drivers shall have a minimum efficiency of 85%
2. Starting Temperature: -40° C
3. Input Voltage: capable of 120 to 480 (±10%) volt, single phase or as required by the site
4. Power supplies can be UL Class I or II output
5. Surge Protection: The system must survive 250 repetitive strikes of "C Low" (C Low – 6kV/1.2 x 50 µs, 10kA/8 x 20 µs) waveforms at 1 minute intervals with less than 10% degradation in clamping voltage. "C Low" waveforms are as defined in IEEE/ASNI C62.41.2-2002, Scenario 1 Location Category C
6. Drivers shall have a Power Factor (PF) of: ≥ 0.90
7. Drivers shall have a Total Harmonic Distortion (THD) of: ≤ 20%
8. Drivers shall comply with FCC 47 cfr part 18 non-consumer RFI/EMI standards
9. Drivers shall be Reduction of Hazardous Substances (RoHS) compliant (see http://www.rohs.eu/english/index.html)

PART 3 EXECUTION

3.1 INSTALLATION:

A. Set units plumb, square, and level with ceiling and walls, and secure according to manufacturer's written instructions and approved Shop Drawings. Support fixtures according to requirements of Specification Section on "Basic Electrical Materials and Methods."

1. Install square aperture fixtures parallel to walls; UON. Verify that fixture is parallel prior to completion of ceiling installation.
2. Verify that wallwasher housings have been properly installed to allow for reflector orientation to wash the intended wall.

B. Support for Recessed and Semi-recessed Grid-Type Fluorescent Fixtures: Units may be supported from suspended ceiling support system, unless prohibited by local codes. No movement permitted after installation. Install ceiling support system rods or wires at a minimum of 4 rods or wired for each fixture, located not more than 6 inches (150 mm) from fixture corner.

1. Install support clips for recessed fixtures, securely fastened to ceiling grid members, at or near each fixture corner.
2 Fixtures Smaller than Ceiling Grid: For fixtures that normally mount at the ceiling grid on at least one side, install a minimum of 4 rods or wires for each fixture and locate at corner of ceiling grid where fixture is located. Provide additional ceiling grid to frame out fixture. Do not support fixtures by ceiling acoustical panels. Example: 1x4 fixture in 2x4 panel.
3. Fixtures of Sizes Less than Ceiling Grid: Center in acoustical panel. Support fixtures independently with at least two ¾ inch (20 mm) metal channels spanning and secured to ceiling tees. Example: Recessed 6" aperture downlight in 2x2 panel.

C. Support for Suspended Fixtures: Brace pendants and rods over 48 inches (1200 mm) long to limit swinging. Support stem-mounted, single-unit, suspended fluorescent fixtures with twin-stem hangers. For continuous rows, use tubing or stem for wiring at one point and tubing or rod or aircraft cable for suspension for each unit length of chassis, including one at each end.
1. Provide all mounting components required for installation, including hickeys, stud-extensions, ball-aligners, canopies and stems.
2. Provide stems on pendant fixtures of the correct length to uniformly maintain the fixture heights shown on the drawings or established in the field.

D. Fixture Attachment with Adjustable Features or Aiming: Attach fixtures and supports to allow aiming for indicated light distribution. Do not screw through housings in a manner that will restrict lamp adjustability. Confirm requirements based on manufacturers' cut sheets or contact manufacturer if necessary to verify mounting method.

E. Lamping: Where specific lamp designations are not indicated, lamp units according to manufacturer's instructions.

F. Installation Sequence: Install fixture mounting frames, plaster rings, etc. prior to the trim assembly, which shall not be installed until the project is "broom clean". Where the fixture

location or construction does not permit sequential installation, all reflectors, lenses, flanges and other visible surfaces shall be carefully protected

3.2 WIRING

A. Minimum standards: All wiring shall comply with the following standards:

1. All wiring within lighting fixtures or from the splice with the building wiring shall be as specified under Division 26 "WIRE AND CABLES".
2. Wiring between fluorescent lamp holders and associated operating and starting equipment shall be of similar or heavier gauge than the leads furnished with the approved ballasts.
3. Wire leads to the receptacle or connector of any side prong incandescent lamp or any "cool-beam" lamp, or any lamp 200 watts or over shall be SF-2 (silicone rubber insulated) stranded wire.
4. Wiring within fixture construction is to be concealed, except where the fixture design or mounting dictates otherwise.
5. Joints in wiring within lighting fixtures and connections of the fixture wiring to the wiring of the building shall be as specified under "WIRE AND CABLES" with special attention to paragraphs relating to high amperage, low voltage conditions.
6. Wiring channels and wireways shall be free from projections and rough or sharp edges throughout, and at all points or edges over which conductors must pass and may be subject to injury or wear.
7. Insulated bushings shall be installed at points of entrance and exit of flexible wiring.

3.3 GROUNDING

A. Ground fixtures according to Specification Section on "Grounding." Tighten electrical connectors and terminals, including grounding connections, according to manufacturer's published torque-tightening values.

3.4 FIELD QUALITY CONTROL

A. Inspect each installed fixture for damage. Replace damaged fixtures and components, prior to scheduling punchlist review.

B. Give advance notice of dates and times for field tests.

C. Provide instruments to make and record test results.

D. Tests: Verify normal operation of each fixture after fixtures have been installed and circuits have been energized with normal power source.

E. Replace or repair malfunctioning fixtures and components, then retest. Repeat procedure until all units operate properly.

F. Report results of tests.

G. Replace fixtures that show evidence of corrosion during Project warranty period.

3.5 CLEANING AND ADJUSTING

A. Clean fixtures after installation: Remove all protective strippable coatings, dust, finger marks, paint spots and any materials deleterious to the appearance or functioning of the fixtures. Use methods and materials recommended by manufacturer. Abrasive cleaners are not permitted.

B. Focusing and adjustment: After installation of all lighting fixtures, finishes and furnishings has been completed, the Contractor shall provide personnel, ladders or lifts, spare lamps and any other equipment necessary to expeditiously focus (aim) all adjustable lighting. Focusing shall be performed after dark, unless all visible daylight can be screened out of the focusing area, and shall take place under supervision of the Lighting Designer. All work shall be performed in accordance with union rules, should they be in force, and applicable codes. Where pre-aiming diagrams or angles have been provided by the Lighting Designer, this information shall be considered preliminary aiming, which is being provided to help expedite the process of night focusing. Pre-aiming by the Contractor does not eliminate the requirement for final focusing after dark.

C. Lighting interface with dimming control systems: Where lighting is being controlled on a dimming system (specified elsewhere), the system shall be up and running at the time of final focusing so that the Lighting Designer may provide input on dimmed preset levels. Technical personnel from the dimming manufacturer shall be on hand at final focusing to adjust the light levels and coordinate with the Lighting Designer.

3.6 FINAL INSPECTION

A. Upon completion of the installation, lighting equipment must be in first class operating order and free from defects in condition and finish.

1. At time of final inspection, all fixtures and equipment must be installed and lamped with new lamps and be complete with all lenses, diffusers, reflectors, side panels, louvers or other necessary components. Lamps that have been operating longer than the following time limits or that have already burned our must be replaced with new lamps prior to final completion.

    a. Halogen incandescent lamps: 200 hours (approximately 25 eight-hour days).
    b. Non-halogen Incandescent lamps: 75 hours (approximately 9 eight-hour days).
    c. Fluorescent lamps: 1000 hours (approximately 125 eight-hour days).
    d. HID lamps: 1000 hours (approximately 125 eight-hour days).

2. Fixtures shall be completely clean and free from finger marks, dust, plaster or paint spots.

3. Any reflectors, lenses, diffusers, side panels or other parts damaged prior to the final inspection shall be replaced.

4. Where finish has been scratched or damaged on exterior fixtures, repair finish to match factory color.

5. Housings shall be rigidly installed and adjusted to a neat flush fit with the ceiling.

6. No light leaks shall be permitted at the ceiling line or from any visible part or joint.

PART 4 LUMINAIRE SCHEDULE

TYPE	DESCRIPTION	LAMP/ ELECTRICAL	MANUFACTURER/CATALOG CODE
L1	Suspension mounted linear high output LED direct/ indirect light Location: Lab	White LED Color: 3000K CRI: 80 Lumen: 1000 lm/lf Watt: 12.25 W/lf Voltage: 277 Dimming protocol: non-dim	AXIS "SLIM SurroundLite" 25% up and 75% down; provide fixture with 3' and 4' segment flat blade louvers; Architect to confirm white finish and white power cord; Architect to coordinate mounting height, bottom of fixture @ 9' AFF; Contractor to coordinate mounting option with ceiling type Or approved equal by PEERLESS "Bruno" CORELITE "Element Micro Prismatic"
	<u>Type L1 fixtures:</u> L1-6' L1-8' L1-12' L1-14' L1-16' L1-28'	 SLLED-B3-EL25/75-1000-30-PL-3-6-W-277-D-1-(mounting/ suspension SLLED-B3-EL25/75-1000-30-PL-4-8-W-277-D-1-(mounting/ suspension) SLLED-B3-EL25/75-1000-30-PL-4-12-W-277-D-1-(mounting/ suspension) SLLED-B3-EL25/75-1000-30-PL-4&2-14-W-277-D-1-(mounting/ suspension) SLLED-B3-EL25/75-1000-30-PL-4-16-W-277-D-1-(mounting/ suspension) SLLED-B3-EL25/75-1000-30-PL-4-28-W-277-D-1-(mounting/ suspension)	

Notes:
1. Contractor shall verify all catalog codes with drawn and written descriptions.
2. Architect to verify all fixture finishes.
3. Architect to verify ceiling type and grid system for light fixture installation. Contractor to coordinate all ceiling materials and thicknesses with fixture trim requirements. Thick ceilings (greater than ¾") may require modifications to fixtures.
4. Electrical Engineer to verify all supply voltages.

PART 4 LUMINAIRE SCHEDULE

TYPE	DESCRIPTION	LAMP/ ELECTRICAL	MANUFACTURER/CATALOG CODE
L1A	Suspension mounted linear dimmable high output LED direct/ indirect light Location: Meeting rooms 110B, 114C, CGI Lab training 309BA	White LED Color: 3000K CRI: 80 Lumen: 1000 lm/lf Watt: 12.25 W/lf Voltage: 277 Dimming protocol: Lutron EcoSystem	AXIS "SLIM Surround Lite" 25% up and 75% down; provide fixture with 2' and 4' segment flat blade louvers; Lutron EcoSystem dimming driver, 10% dimming; Architect to confirm white finish and white power cord; Architect to coordinate mounting height, bottom of fixture @ 9' AFF; Contractor to coordinate mounting option with ceiling type; Contractor to coordinate wiring and dimming compatibility with controls being provided Or approved equal by PEERLESS "Bruno" CORELITE "Element Micro Prismatic"
	<u>Type L1A fixtures:</u> L1A-12' L1A-14' L1A-18'	 SLLED-B3-EL25/75-1000-30-PL-4-12-W-277-LT/EcoSystem-1-(mounting/ suspension) SLLED-B3-EL25/75-1000-30-PL-4&2-14-W-277- LT/EcoSystem -1-(mounting/ suspension) SLLED-B3-EL25/75-1000-30-PL-4-18-W-277-LT/EcoSystem -1-(mounting/ suspension)	

Notes:
1. Contractor shall verify all catalog codes with drawn and written descriptions.
2. Architect to verify all fixture finishes.
3. Architect to verify ceiling type and grid system for light fixture installation. Contractor to coordinate all ceiling materials and thicknesses with fixture trim requirements. Thick ceilings (greater than ¾") may require modifications to fixtures.
4. Electrical Engineer to verify all supply voltages.

PART 4 LUMINAIRE SCHEDULE

TYPE	DESCRIPTION	LAMP/ ELECTRICAL	MANUFACTURER/CATALOG CODE
L1B	Suspension mounted linear dimmable standard output LED direct/ indirect light Location: Office	White LED Color: 3000K CRI: 80 Lumen: 800 lm/lf Watt: 10.45 W/lf Voltage: 277 Dimming protocol: non-dim	AXIS "SLIM Surround Lite" SLLED-B3-EL35/65-800-30-PL-4-12'-W-277-D-1-(mounting/ suspension) 35% up and 65% down; provide fixture with 3' and 4' segment flat blade louvers; 0-10V control ready driver; Architect to confirm white finish and white power cord; Architect to coordinate mounting height, bottom of fixture @ 9' AFF; Contractor to coordinate mounting option with ceiling type Or approved equal by PEERLESS "Bruno" CORELITE "Element Micro Prismatic"
	<u>Type L1B fixtures:</u> L1B-4' L1B-6' L1B-8' L1B-9'	 SLLED-B3-EL35/65-800-30-PL-4-4-W-277-D-1-(mounting/ suspension) SLLED-B3-EL35/65-800-30-PL-3-6-W-277-D-1-(mounting/ suspension) SLLED-B3-EL35/65-800-30-PL-4-8-W-277-D-1-(mounting/ suspension) SLLED-B3-EL35/65-800-30-PL-3-9-W-277-D-1-(mounting/ suspension)	
L2	Recessed 4" aperture LED downlight Location: Multiple Energy Star qualified product	White LED Color: 3000K CRI: 85 Lumen: 1800lm Watt: 29W Voltage: 277V Dimming protocol: non-dim	GOTHAM "EVO 4" EVO-30-18-4AR-277-TRW Provide fixture with standard distribution, semi-specular reflector; Architect to verify white painted flange Or approved equal by KURT VERSEN PORTFOLIO

Notes:
1. Contractor shall verify all catalog codes with drawn and written descriptions.
2. Architect to verify all fixture finishes.
3. Architect to verify ceiling type and grid system for light fixture installation. Contractor to coordinate all ceiling materials and thicknesses with fixture trim requirements. Thick ceilings (greater than ¾") may require modifications to fixtures.
4. Electrical Engineer to verify all supply voltages.

PART 4 LUMINAIRE SCHEDULE

TYPE	DESCRIPTION	LAMP/ ELECTRICAL	MANUFACTURER/CATALOG CODE
L2A	Recessed 4" aperture LED downlight Location: Multiple Energy Star qualified product	White LED Color: 3000K CRI: 85 Lumen: 1000lm Watt: 21W Voltage: 277V Dimming protocol: non-dim	GOTHAM "EVO 4" EVO-30-10-4AR-277-TRW Provide fixture with standard distribution, semi-specular reflector; Architect to verify white painted flange Or approved equal by KURT VERSEN PORTFOLIO
L2B	Recessed 4" aperture dimmable LED downlight Location: Gathering/ Display space Energy Star qualified product	White LED Color: 3000K CRI: 85 Lumen: 1800lm Watt: 29W Voltage: 277V Dimming protocol: EcoSystem	GOTHAM "EVO 4" EVO-30-18-4AR-277-ECOS3(custom flange finish) Provide fixture with standard distribution, semi-specular reflector; Architect to specify custom flange finish; 1% dimming; Contractor to coordinate mounting detail-Coordinate housing size to fit within ceiling panel; Contractor to coordinate wiring and dimming compatibility with controls being provided Or approved equal by KURT VERSEN PORTFOLIO

Notes:
1. Contractor shall verify all catalog codes with drawn and written descriptions.
2. Architect to verify all fixture finishes.
3. Architect to verify ceiling type and grid system for light fixture installation. Contractor to coordinate all ceiling materials and thicknesses with fixture trim requirements. Thick ceilings (greater than ¾") may require modifications to fixtures.
4. Electrical Engineer to verify all supply voltages.

PART 4 LUMINAIRE SCHEDULE

TYPE	DESCRIPTION	LAMP/ ELECTRICAL	MANUFACTURER/CATALOG CODE
L2C	Recessed 4" aperture LED downlight Location: 5th Floor Lab Energy Star qualified product	White LED Color: 3000K CRI: 85 Lumen: 2000lm Watt: 31W Voltage: 277V Dimming protocol: non-dim	GOTHAM "EVO 4" EVO-30-20-4AR-277-TRW Provide fixture with standard distribution, semi-specular reflector; Architect to verify white painted flange Or approved equal by KURT VERSEN PORTFOLIO
L3	Recessed 4" aperture LED downlight wall washer Location: Multiple Energy Star qualified product	White LED Color: 3000K CRI: 85 Lumen: 1800lm Watt: 29W Voltage: 277V Dimming protocol: non-dim	GOTHAM "EVO 4 WW" EVO-WW-30-18-4AR-277-TRW Provide Semi-specular reflector; Architect to verify white painted flange Or approved equal by KURT VERSEN PORTFOLIO
L3A	Recessed 4" aperture LED downlight wall washer Location: Multiple Energy Star qualified product	White LED Color: 3000K CRI: 85 Lumen: 1000lm Watt: 21W Voltage: 277V Dimming protocol: non-dim	GOTHAM "EVO 4 WW" EVO-WW-30-10-4AR-277-TRW Provide Semi-specular reflector; Architect to verify white painted flange Or approved equal by KURT VERSEN PORTFOLIO

Notes:
1. Contractor shall verify all catalog codes with drawn and written descriptions.
2. Architect to verify all fixture finishes.
3. Architect to verify ceiling type and grid system for light fixture installation. Contractor to coordinate all ceiling materials and thicknesses with fixture trim requirements. Thick ceilings (greater than ¾") may require modifications to fixtures.
4. Electrical Engineer to verify all supply voltages.

PART 4 LUMINAIRE SCHEDULE

TYPE	DESCRIPTION	LAMP/ ELECTRICAL	MANUFACTURER/CATALOG CODE
L3B	Recessed 4" aperture LED downlight double wall washer Location: Multiple Energy Star qualified product	White LED Color: 3000K CRI: 85 Lumen: 1800lm Watt: 29W Voltage: 277V Dimming protocol: non-dim	GOTHAM "EVO 4 WW" EVO-DWW-30-18-4AR-277-TRW Provide Semi-specular reflector; Architect to verify white painted flange Or approved equal by KURT VERSEN PORTFOLIO
L3C	Recessed 4" aperture LED downlight corner wall washer Location: Multiple Energy Star qualified product	White LED Color: 3000K CRI: 85 Lumen: 1800lm Watt: 29W Voltage: 277V Dimming protocol: non-dim	GOTHAM "EVO 4 WW" EVO-CWW-30-10-4AR-277-TRW Provide Semi-specular reflector; Architect to verify white painted flange Or approved equal by KURT VERSEN PORTFOLIO
L3D	Recessed 4" aperture LED downlight double wall washer Location: Multiple Energy Star qualified product	White LED Color: 3000K CRI: 85 Lumen: 1000lm Watt: 29W Voltage: 277V Dimming protocol: non-dim	GOTHAM "EVO 4 WW" EVO-DWW-30-10-4AR-277-TRW Provide Semi-specular reflector; Architect to verify white painted flange Or approved equal by KURT VERSEN PORTFOLIO

Notes:
1. Contractor shall verify all catalog codes with drawn and written descriptions.
2. Architect to verify all fixture finishes.
3. Architect to verify ceiling type and grid system for light fixture installation. Contractor to coordinate all ceiling materials and thicknesses with fixture trim requirements. Thick ceilings (greater than ¾") may require modifications to fixtures.
4. Electrical Engineer to verify all supply voltages.

PART 4 LUMINAIRE SCHEDULE

TYPE	DESCRIPTION	LAMP/ ELECTRICAL	MANUFACTURER/CATALOG CODE
L4	Recessed 4” width linear dimmable LED with 2” drop down lens Location: Gathering/ Display space	White LED Color: 3000K CRI: >80 Lumen: 240lm/lf Watt: 6W/lf Voltage: 277V Dimming protocol: 0-10V 4-wire dimming	MARK LIGHTING “Fin LED” Modified for trimless detail; modified for parallelogram configuration – see architectural drawing; frosted sides, frosted edges 2” drop down lens; manufacturer’s shop drawing required for final approval; Contractor to coordinate fixture length with ceiling system; 1% dimming; Contractor to coordinate wiring and dimming compatibility with controls being provided Or approved equal by 3G LIGHTING
	<u>Type L4 fixture</u> L4-2’ ~~L4-2.5’~~ L4-5’ L4-5.5’ ~~L4-6’~~ L4-8’	 FINL-2FT-2D-N-30-HI-277-FF-MOD/ parallelogram shape trim and lens-MOD/trimless detail-NX ~~FINL-2.5FT-2D-N-30-HI-277-FF-MOD/ parallelogram shape trim and lens-MOD/trimless detail-NX~~ FINL-5FT-2D-N-30-HI-277-FF-MOD/ parallelogram shape trim and lens-MOD/trimless detail-NX FINL-5.5FT-2D-N-30-HI-277-FF-MOD/ parallelogram shape trim and lens-MOD/trimless detail-NX ~~FINL-6FT-2D-N-30-HI-277-FF-MOD/ parallelogram shape trim and lens-MOD/trimless detail-NX~~ FINL-8FT-2D-N-30-HI-277-FF-MOD/ parallelogram shape trim and lens-MOD/trimless detail-NX	

Notes:
1. Contractor shall verify all catalog codes with drawn and written descriptions.
2. Architect to verify all fixture finishes.
3. Architect to verify ceiling type and grid system for light fixture installation. Contractor to coordinate all ceiling materials and thicknesses with fixture trim requirements. Thick ceilings (greater than ¾”) may require modifications to fixtures.
4. Electrical Engineer to verify all supply voltages.

PART 4 LUMINAIRE SCHEDULE

TYPE	DESCRIPTION	LAMP/ ELECTRICAL	MANUFACTURER/CATALOG CODE
L5	Regressed 4 ¼" width linear lensed LED perimeter wall grazer Location: Elevator Lobby/ Informal Study	White LED Color: 3000K CRI: >80 Lumen: 400lm/lf Watt: 6W/lf Voltage: 277V Dimming protocol: non-dim	MARK LIGHTING "SPR LED" SPRL-(length)-(ceiling)-N-30-AD-277-FA-NX-(corner if required)-end cap Standard end cap is available – Contractor to coordinate as required; Contractor to coordinate fixture trim detail with ceiling system; Contractor to coordinate fixture run lengths and configuration (corner), as indicated in architectural drawings; manufacturer's shop drawing is required indicating corner configuration as needed Or approved equal by LITECONTROL GAMMALUX
L5A	Regressed 4 ¼" width linear lensed dimmable LED perimeter wall grazer Location: Gathering Space	White LED Color: 3000K CRI: >80 Lumen: 400lm/lf Watt: 6W/lf Voltage: 277V Dimming protocol: 0-10V 4-wire dimming with Lutron Ecosystem interface module	MARK LIGHTING "SPR LED" SPRL-(length)-(ceiling)-N-30-AD-277-FA-NX-ECO-end cap-(flange finish) Standard end cap is available – Contractor to coordinate as required; Architect to specify flange finish if not white; Lutron Ecosystem interface module; Contractor to coordinate fixture trim detail with ceiling system; Contractor to coordinate fixture run lengths in architectural drawings-manufacturer's shop drawing is required; 2% dimming; Contractor to coordinate wiring and dimming compatibility with controls being provided Or approved equal by LITECONTROL GAMMALUX

Notes:
1. Contractor shall verify all catalog codes with drawn and written descriptions.
2. Architect to verify all fixture finishes.
3. Architect to verify ceiling type and grid system for light fixture installation. Contractor to coordinate all ceiling materials and thicknesses with fixture trim requirements. Thick ceilings (greater than ¾") may require modifications to fixtures.
4. Electrical Engineer to verify all supply voltages.

PART 4 LUMINAIRE SCHEDULE

TYPE	DESCRIPTION	LAMP/ ELECTRICAL	MANUFACTURER/CATALOG CODE
L6	Recessed 4.5" aperture LED adjustable accent light (downlight position) Location: Lobby Energy Star qualified product	White LED Color: 3000K CRI: 80 Lumen: 2525lm Watt: 36W Voltage: 277V Dimming protocol: non-dim	USAI "Bevel LED2.0" Trim: 3231MXA30-AC1-10 Housing: LRTA4-8436-X2-30KS-30-NC-277V – LMD55F 55° lens for field adjustment; standard Solite lens; aiming straight down only; Architect to verify white flange; ceiling thickness up to 1-1/4" – Contractor to coordinate; Contractor to coordinate mounting bars if needed Or approved equal by LUCIFER INTENSE LIGHTING
L6A	Recessed 4.5" aperture LED adjustable accent light Location: Lobby Energy Star qualified product	White LED Color: 3000K CRI: 80 Lumen: 2525lm Watt: 36W Voltage: 277V Dimming protocol: non-dim	USAI "Bevel LED2.0" Trim: 3231MXA30-AC1-10 Housing: LRTA4-8436-X2-30KS-30-NC-277V Standard Solite lens; Architect to verify white flange; adjustable 30° housing and ceiling thickness up to 1-1/4" – Contractor to coordinate; Contractor to coordinate mounting bars if needed Or approved equal by LUCIFER INTENSE LIGHTING

Notes:
1. Contractor shall verify all catalog codes with drawn and written descriptions.
2. Architect to verify all fixture finishes.
3. Architect to verify ceiling type and grid system for light fixture installation. Contractor to coordinate all ceiling materials and thicknesses with fixture trim requirements. Thick ceilings (greater than ¾") may require modifications to fixtures.
4. Electrical Engineer to verify all supply voltages.

PART 4 LUMINAIRE SCHEDULE

TYPE	DESCRIPTION	LAMP/ ELECTRICAL	MANUFACTURER/CATALOG CODE
L7	Window mullion mounted linear LED uplight with remote power supply Location: Corner areas	White LED Color: 5000K CRI: 83 Lumen: 678lm/lf Watt: 4.7W/lf Voltage: 277 Dimming protocol; non-dim	LED LINEAR "VarioLED Flex HYDRA LD15" Fixture: 10321 Mounting: 10000039 Power supply: 16000123 Control: 16000057 Low square lens cover; L-shape fascia to shield light fixture; Architect and Contractor to coordinate mounting detail and wiring with window mullions; Contractor to coordinate remote power supply size & location; Contractor to coordinate fixture run lengths between vertical mullions Or approved equal by OPTOLUM LIGHTING VLT LIGHTING
L8	Recessed 2' x 4' high output LED lensed troffer Location: Lab support, Fume Hood, Tissue Culture, Glass Wash DLC qualified product	White LED Color: 3000K CRI: >80 Lumen: 7792 lm Watt: 81W Voltage: 277 Dimming protocol; non-dim	MARK LIGHTING "Whisper LED" WHSL-24-H-30-AD-277-SWC-SWO-NX Soft white acrylic lens at center and outer Or approved equal by AXIS LEDALITE

Notes:
1. Contractor shall verify all catalog codes with drawn and written descriptions.
2. Architect to verify all fixture finishes.
3. Architect to verify ceiling type and grid system for light fixture installation. Contractor to coordinate all ceiling materials and thicknesses with fixture trim requirements. Thick ceilings (greater than ¾") may require modifications to fixtures.
4. Electrical Engineer to verify all supply voltages.

PART 4 LUMINAIRE SCHEDULE

TYPE	DESCRIPTION	LAMP/ ELECTRICAL	MANUFACTURER/CATALOG CODE
L8A	Recessed 2' x 4' dimmable high output LED lensed troffer Location: 4th Floor Imaging/ Optical Lab DLC qualified product	White LED Color: 3000K CRI: >80 Lumen: 7792 lm Watt: 81W Voltage: 277 Dimming protocol; 0-10V 4-wire diming	MARK LIGHTING "Whisper LED" WHSL-24-H-30-AD-277-SWC-SWO-NX Soft white acrylic lens at center and outer; 2% dimming; Contractor to coordinate wiring and dimming compatibility with controls being provided Or approved equal by AXIS LEDALITE
L8B	**Recessed 2' x 4' dimmable standard output LED lensed troffer** **Location: 4th Floor Imaging/ Optical Lab, 1st Floor loading dock office** **DLC qualified product**	**White LED** **Color: 3000K** **CRI: >80** **Lumen: 7792 lm** **Watt: 48W** **Voltage: 277** **Dimming protocol;** **non-dim**	**MARK LIGHTING** **"Whisper LED"** **WHSL-24-N-30-AD-277-SWC-SWO-NX** **Soft white acrylic lens at center and outer** **Or approved equal by** **AXIS** **LEDALITE**
L9	Wall mounted linear LED lensed fixture – 4' length Location: Stair	White LED Color: 3000K Lumen: 629 lm/lf Watt: 6.4W/lf Voltage: 277V Dimming protocol: non-dim	AXIS "Air LED Wall mount" ARWLED-B2-500-30-S-4'-W-277-D-1 Contractor to coordinate location and mounting height as indicated in architectural drawing; Architect to verify white finish Or approved equal by BARTCO FINELITE

Notes:
1. Contractor shall verify all catalog codes with drawn and written descriptions.
2. Architect to verify all fixture finishes.
3. Architect to verify ceiling type and grid system for light fixture installation. Contractor to coordinate all ceiling materials and thicknesses with fixture trim requirements. Thick ceilings (greater than ¾") may require modifications to fixtures.
4. Electrical Engineer to verify all supply voltages.

PART 4 LUMINAIRE SCHEDULE

TYPE	DESCRIPTION	LAMP/ ELECTRICAL	MANUFACTURER/CATALOG CODE
L10	Not used		
L11	Surface mounted linear under cabinet LED task light Location: Pantry	White LED Color: 3000K CRI: 80+ Lumen: 400lm/lf Watt: 8W/lf Voltage: 277 Dimming protocol: No dimming .	TECH LIGHTING "Unilume LED Slimline" 700UCF-(length)-8-3-(finish)-LED-(accessories) Contractor to coordinate splice box, jumper and connector for complete system; Contractor to coordinate fixture run length per architectural drawing; Architect to select finish Or approved equal by JUNO LIGHTING EDGE LIGHTING

Notes:
1. Contractor shall verify all catalog codes with drawn and written descriptions.
2. Architect to verify all fixture finishes.
3. Architect to verify ceiling type and grid system for light fixture installation. Contractor to coordinate all ceiling materials and thicknesses with fixture trim requirements. Thick ceilings (greater than ¾") may require modifications to fixtures.
4. Electrical Engineer to verify all supply voltages.

PART 4 LUMINAIRE SCHEDULE

TYPE	DESCRIPTION	LAMP/ ELECTRICAL	MANUFACTURER/CATALOG CODE
L12	Suspension mounted 4” width linear LED direct/ indirect light – (2-Circuit) Location: Corner Dry lab406, 407, 506, 507, Work station 215, 315, 415, 516, Pantry work station 404	White LED Color: 3000K CRI: 87 Lumen: 424 lm/lf for Uplight, 683 lm/lf for Downlight Watt: 4.6W/lf for Uplight, 9.25W/lf for Downlight Voltage: 277 Dimming protocol; non-dim	FINELITE “High Performance 4 Direct/ Indirect” Continuous fixture available with 6” increment per manufacturer; provide separated circuits for uplight and downlight; standard output uplight, high output downlight; Contractor to coordinate mounting; Architect to coordinate mounting height, bottom of fixture @8’-6” AFF Or approved equal by SELUX GAMMALUX
	Type L12 fixtures: ~~L12-3’~~ ~~HP-4ID-MOD/3’-SO-HO-3000K-F-277V-FA-MC-(ceiling)~~ L12-5’ HP-4ID- MOD/5’-SO-HO-3000K-F-277V-FA-MC-(ceiling) ~~L12-6’~~ ~~HP-4ID- MOD/6’-SO-HO-3000K-F-277V-FA-MC-(ceiling)~~ L12-7’ HP-4ID- MOD/7’-SO-HO-3000K-F-277V-FA-MC-(ceiling) L12-8’ HP-4ID-8’-SO-HO-3000K-F-277V-FA-MC-(ceiling) L12-9’ HP-4ID- MOD/9’-SO-HO-3000K-F-277V-FA-MC-(ceiling) L12-11’ HP-4ID- MOD/11’-SO-HO-3000K-F-277V-FA-MC-(ceiling) ~~L12-12’~~ ~~HP-4ID-12’-SO-HO-3000K-F-277V-FA-MC-(ceiling)~~ L12-13’ HP-4ID- MOD/13’-SO-HO-3000K-F-277V-FA-MC-(ceiling) L12-15’ HP-4ID- MOD/15’-SO-HO-3000K-F-277V-FA-MC-(ceiling) L12-17’ HP-4ID- MOD/17’-SO-HO-3000K-F-277V-FA-MC-(ceiling) L12-18’ HP-4ID- MOD/18’-SO-HO-3000K-F-277V-FA-MC-(ceiling)		

Notes:
1. Contractor shall verify all catalog codes with drawn and written descriptions.
2. Architect to verify all fixture finishes.
3. Architect to verify ceiling type and grid system for light fixture installation. Contractor to coordinate all ceiling materials and thicknesses with fixture trim requirements. Thick ceilings (greater than ¾”) may require modifications to fixtures.
4. Electrical Engineer to verify all supply voltages.

PART 4 LUMINAIRE SCHEDULE

TYPE	DESCRIPTION	LAMP/ ELECTRICAL	MANUFACTURER/CATALOG CODE
L12A	Suspension mounted 4" width dimmable linear LED direct/ indirect light – (2-Circuit) Location: Meeting/ Breakout 205, 405, 505, Meeting 114A, ISG Pantry/ Lunchroom 204, 304	White LED Color: 3000K CRI: 87 Lumen: 424 lm/lf for Uplight, 683 lm/lf for Downlight Watt: 4.6W/lf for Uplight, 9.25W/lf for Downlight Voltage: 277 Dimming protocol; Lutron EcoSystem	FINELITE "High Performance 4 Direct/ Indirect" Continuous fixture available with 6" increment per manufacturer; provide separated circuits for uplight and downlight; standard output uplight, high output downlight; Contractor to coordinate mounting; Architect to coordinate mounting height, bottom of fixture @8'-6" AFF; Lutron EcoSystem dimming driver, 10% dimming; Contractor to coordinate wiring and dimming compatibility with controls being provided Or approved equal by SELUX GAMMALUX
	Type L12A fixtures: ~~L12A-2'~~ L12A-4' L12A-6' **L12A-7'** L12A-8' L12A-9' L12A-10' L12A-11' L12A-12' L12A-17'	 ~~HP-4ID-2'-SO-HO-3000K-F-277V-FA-MC-(ceiling)-LutES~~ HP-4ID-4'-SO-HO-3000K-F-277V-FA-MC-(ceiling)-LutES HP-4ID-MOD/6'-SO-HO-3000K-F-277V-FA-MC-(ceiling)-LutES **HP-4ID-MOD/7'-SO-HO-3000K-F-277V-FA-MC-(ceiling)-LutES** HP-4ID-8'-SO-HO-3000K-F-277V-FA-MC-(ceiling)-LutES HP-4ID-MOD/9'-SO-HO-3000K-F-277V-FA-MC-(ceiling)-LutES HP-4ID-MOD/10'-SO-HO-3000K-F-277V-FA-MC-(ceiling)-LutES HP-4ID-MOD/11'-SO-HO-3000K-F-277V-FA-MC-(ceiling)-LutES HP-4ID-12'-SO-HO-3000K-F-277V-FA-MC-(ceiling)-LutES HP-4ID-MOD/17'-SO-HO-3000K-F-277V-FA-MC-(ceiling)-LutES	
L12B	Not used		

Notes:
1. Contractor shall verify all catalog codes with drawn and written descriptions.
2. Architect to verify all fixture finishes.
3. Architect to verify ceiling type and grid system for light fixture installation. Contractor to coordinate all ceiling materials and thicknesses with fixture trim requirements. Thick ceilings (greater than ¾") may require modifications to fixtures.
4. Electrical Engineer to verify all supply voltages.

PART 4 LUMINAIRE SCHEDULE

TYPE	DESCRIPTION	LAMP/ ELECTRICAL	MANUFACTURER/CATALOG CODE
L12C	Suspension mounted 4" width linear LED direct/ indirect light – (2-Circuit) Location: Office	White LED Color: 3000K CRI: 87 Lumen: 424 lm/lf for Uplight, 424 lm/lf for Downlight Watt: 4.6W/lf for Uplight, 4.6W/lf for Downlight Voltage: 277 Dimming protocol; non-dim	FINELITE "High Performance 4 Direct/ Indirect" Continuous fixture available with 6" increment per manufacturer; provide separated circuits for uplight and downlight; standard output uplight, high output downlight; Contractor to coordinate mounting; Architect to coordinate mounting height, bottom of fixture @8'-6" AFF Or approved equal by SELUX GAMMALUX
	<u>Type L12C fixtures:</u> L12C-2' L12C-4' L12C-6' L12C-8' L12C-10' **L12C-11'** L12C-12'	 HP-4ID-2'-SO-SO-3000K-F-277V-FA-MC-(ceiling) HP-4ID-4'-SO-SO-3000K-F-277V-FA-MC-(ceiling) HP-4ID-MOD/6'-SO-SO-3000K-F-277V-FA-MC-(ceiling) HP-4ID-8'-SO-SO-3000K-F-277V-FA-MC-(ceiling) HP-4ID-MOD/10'-SO-SO-3000K-F-277V-FA-MC-(ceiling) **HP-4ID-MOD/11'-SO-SO-3000K-F-277V-FA-MC-(ceiling)** HP-4ID-12'-SO-SO-3000K-F-277V-FA-MC-(ceiling)	

Notes:
1. Contractor shall verify all catalog codes with drawn and written descriptions.
2. Architect to verify all fixture finishes.
3. Architect to verify ceiling type and grid system for light fixture installation. Contractor to coordinate all ceiling materials and thicknesses with fixture trim requirements. Thick ceilings (greater than ¾") may require modifications to fixtures.
4. Electrical Engineer to verify all supply voltages.

PART 4 LUMINAIRE SCHEDULE

TYPE	DESCRIPTION	LAMP/ ELECTRICAL	MANUFACTURER/CATALOG CODE
L13	Recessed 4.5" aperture dimmable LED adjustable accent light Location: Gathering/ Display space	White LED Color: 3000K CRI: 80 Lumen: 678lm Watt: 20W Voltage: 277V Dimming protocol: Lutron EcoSystem	INTENSE LIGHTING "impression" Trim: RTRA300-C-SF(Custom finish) Housing: IL-ARTRKO-NC-L3-30-LUT-27-12-(accessories) Optic: PFL4-57 KO spot optic 12° beam; Architect to specify custom flange finish to match ceiling; adjustable 40° housing and ceiling thickness up to 1" – Contractor to coordinate; Contractor to coordinate mounting bars if needed; Solite lens; Contractor to coordinate wiring and dimming compatibility with controls being provided Or approved equal by LUCIFER GOTHAM
L14	Recessed round 14" diameter LED lensed downlight Location: Restroom vestibule	White LED Color: 3000K CRI: 84 Lumen: 985 lm Watt: 11W Voltage: 277 Dimming protocol: non-dim	XAL "COMBO round LED" N661-121-0140-7150-O-7 Architect to verify white finish; Contractor to coordinate trim detail with ceiling system Or approved equal by MARK LIGHTING FOCAL POINT
L15	Not used		

Notes:
1. Contractor shall verify all catalog codes with drawn and written descriptions.
2. Architect to verify all fixture finishes.
3. Architect to verify ceiling type and grid system for light fixture installation. Contractor to coordinate all ceiling materials and thicknesses with fixture trim requirements. Thick ceilings (greater than ¾") may require modifications to fixtures.
4. Electrical Engineer to verify all supply voltages.

PART 4 LUMINAIRE SCHEDULE

TYPE	DESCRIPTION	LAMP/ ELECTRICAL	MANUFACTURER/CATALOG CODE
L15A	Suspension mounted wet location rated linear lensed dimmable LED – 8' length Location: Water Lab	White LED Color: 3000K CRI: 87 Lumen: 600 lm/lf Watt: 5W/lf Voltage: 277 Dimming protocol; Lutron 3-wire	A LIGHT "X6 aire" X6-8'-LS-30-U-P-A-S-(finish)-D/ Lutron 3-wire a-cirrus lens; Architect to select finish; Contractor to coordinate mounting to ceiling; Architect to coordinate mounting height, bottom of fixture @13'-6" AFF; Contractor to coordinate wiring and dimming compatibility with controls being provided Or approved equal by FINE LITE GAMMALUX
L16	Suspension mounted reflector LED pendant Location: Virtual Reality Space 106, Cyber Physics 107	White LED Color: 3000K CRI: 80 Lumen: 5995lm Watt: 85W Voltage: 277 Dimming protocol; Lutron 3-wire	BETACALCO "Belaro Reflector" 20 2250-FR- Lutron 3-wire driver Lutron 3-wire dimming driver; Contractor to coordinate mounting height, bottom of fixture align to aluminum framing grid; Contractor to coordinate wiring and dimming compatibility with controls being provided Or approved equal by DELRAY

Notes:
1. Contractor shall verify all catalog codes with drawn and written descriptions.
2. Architect to verify all fixture finishes.
3. Architect to verify ceiling type and grid system for light fixture installation. Contractor to coordinate all ceiling materials and thicknesses with fixture trim requirements. Thick ceilings (greater than ¾") may require modifications to fixtures.
4. Electrical Engineer to verify all supply voltages.

PART 4 LUMINAIRE SCHEDULE

TYPE	DESCRIPTION	LAMP/ ELECTRICAL	MANUFACTURER/CATALOG CODE
L17	Recessed wet location 2'x4' LED troffer with gasket lens Location: Fly room 216E, Tissue culture 216F	White LED Color: 3000K CRI: Lumen: 7313lm Watt: 77W Voltage: 277 Dimming protocol; non-dim	KURTZON "Eco-Lock Advance Clean Space Series" EL-(ceiling type)-4-2x4-2/LEDR30-277V Gasket lens wet location rate IP55; Contractor to coordinate fixture trim detail with ceiling type Or approved equal by KENALL COOPER FAIL-SAFE
L18	Ceiling recessed trimless linear lensed LED – 10' length Location: 2nd & 3rd Floor Stair	White LED Color: 3000K CRI: 87 Lumen: 424 lm/lf Watt: 4.6W/lf Voltage: 277 Dimming protocol; non-dim	FINELITE "High Performance 4" Aperture" HP-4R-MOD/10'-SO-3000K-277V-SC-SF Spackle flange; Contractor to coordinate fixture mounting Or approved equal by SELUX GAMMALUX
L18A	Ceiling & wall recessed trimless linear lensed LED with 90° outside corner Location: 2nd & 3rd Floor Stair	White LED Color: 3000K CRI: 87 Lumen: 424 lm/lf Watt: 4.6W/lf Voltage: 277 Dimming protocol; non-dim	FINELITE "High Performance 4" Aperture" HP-4R- MOD/90° outside corner-SO-3000K-277V-SC-SF Spackle flange; Manufacturer shop drawing require for approval - see architectural drawing for dimensions and configuration; Contractor to coordinate fixture mount to ceiling and soffit wall Or approved equal by SELUX GAMMALUX

Notes:
1. Contractor shall verify all catalog codes with drawn and written descriptions.
2. Architect to verify all fixture finishes.
3. Architect to verify ceiling type and grid system for light fixture installation. Contractor to coordinate all ceiling materials and thicknesses with fixture trim requirements. Thick ceilings (greater than ¾") may require modifications to fixtures.
4. Electrical Engineer to verify all supply voltages.

PART 4 LUMINAIRE SCHEDULE

TYPE	DESCRIPTION	LAMP/ ELECTRICAL	MANUFACTURER/CATALOG CODE
L18B	Ceiling & wall recessed trimless linear lensed LED with 90° outside corner Location: 2nd & 3rd Floor Stair	White LED Color: 3000K CRI: 87 Lumen: 424 lm/lf Watt: 4.6W/lf Voltage: 277 Dimming protocol; non-dim	FINELITE "High Performance 4" Aperture" HP-4R- MOD/90° outside corner-SO-3000K-277V-SC-SF Spackle flange; Manufacturer shop drawing require for approval - see architectural drawing for dimensions and configuration; Contractor to coordinate fixture mount to ceiling and soffit wall Or approved equal by SELUX GAMMALUX
L19			
LX1	Surface mounted adjustable downlight Location: Entry Canopy	White LED Color: 3000K CRI: 83 Lumen: 347 lm Watt: 8.3W Voltage: 277 Dimming protocol; non-dim	BK LIGHTING "Delta Star" DS-LED-E22-WFL-A9-(finish)-12-11-B Contractor to coordinate mounting detail to canopy structure; Architect to select finish Or approved equal by LUMIERE LIGHTING HK LIGHTING

Notes:
1. Contractor shall verify all catalog codes with drawn and written descriptions.
2. Architect to verify all fixture finishes.
3. Architect to verify ceiling type and grid system for light fixture installation. Contractor to coordinate all ceiling materials and thicknesses with fixture trim requirements. Thick ceilings (greater than ¾") may require modifications to fixtures.
4. Electrical Engineer to verify all supply voltages.

PART 4 LUMINAIRE SCHEDULE

TYPE	DESCRIPTION	LAMP/ ELECTRICAL	MANUFACTURER/CATALOG CODE
LX2	Recessed 4" aperture LED downlight Location: Exterior soffit Energy Star qualified product	White LED Color: 3000K CRI: 85 Lumen: 600lm Watt: 16W Voltage: 277V Dimming protocol: non-dim	GOTHAM "EVO 4" EVO-30-06-4AR-277-TRW Provide fixture with standard distribution, semi-specular reflector; Architect to verify white painted flange Or approved equal by KURT VERSEN PORTFOLIO
LX3	Post top mounted induction lamp pathway light – with 12' pole (University Standard) Location: Exterior walkway	PHILIPS QL 165W Induction lamp Watt: 165W Voltage: 277V Dimming protocol: non-dim	PENGLOBE "PennSTAR" Fixture: F9AL-GX935-UC934 Pole: P649-W1N21-4000 Contractor to coordinate fixture to match color temperature with existing light poles; Contractor to coordinate mounting detail
LX4	Post top mounted LED roadway light – with 25' pole (University Standard) Location: Exterior parking lot & road way	White LED Color: 3000K CRI: 70 Lumen: 10,800lm Watt: 145W Voltage: 277V Dimming protocol: non-dim	STERNER "Extruded Series" EXEC-RT21-60L-3K-070-5M-4-10-(color)-(pole) Type V medium distribution; 25' pole; Contractor to coordinate fixture to match color temperature with Type LX3and existing light poles; Contractor to coordinate mounting detail

Notes:
1. Contractor shall verify all catalog codes with drawn and written descriptions.
2. Architect to verify all fixture finishes.
3. Architect to verify ceiling type and grid system for light fixture installation. Contractor to coordinate all ceiling materials and thicknesses with fixture trim requirements. Thick ceilings (greater than ¾") may require modifications to fixtures.
4. Electrical Engineer to verify all supply voltages.

PART 4 LUMINAIRE SCHEDULE

TYPE	DESCRIPTION	LAMP/ ELECTRICAL	MANUFACTURER/CATALOG CODE
LX4A	Post top mounted LED roadway light – with 25' pole (University Standard) Location: Exterior parking lot & road way	White LED Color: 3000K CRI: 70 Lumen: 10,800lm Watt: 145W Voltage: 277V Dimming protocol: non-dim	STERNER "Extruded Series" EXEC-RT21-60L-3K-070-2-4-10-(color)-(pole) Type II distribution; 25' pole; Contractor to coordinate fixture to match color temperature with Type LX3and existing light poles; Contractor to coordinate mounting detail
LX5	Wall mounted LED path light Location: Building Exterior wall	White LED Color: 3000K CRI: 85 Lumen: 291lm Watt: 6.6W Voltage: 277V Dimming protocol: non-dim	BEGA-US 2261LED-(finish) Architect to specify finish; Contractor to coordinate mounting location- see architectural drawing for location Or approved equal by ERCO ZANEEN
LX6	Exterior asymmetric throw LED illuminated handrail system - nominal 60' length Location: Exterior walkway	White LED Color: 3000K CRI: 80 Lumen: 171lm/lf Watt: 4.5W/lf Voltage: 277V Dimming protocol: non-dim	COLE LIGHTING "Light Rail LR5LED" LR5P-LED-SS-INT-FL- ASYM/30°-277 Integral driver; frosted lens, 30° tilt asymmetric distribution; Contractor to coordinate handrail length, configuration and power feed location with architectural drawing – manufacturer's shop drawing showing round railing at 1.9" OD and round posts at 2-3/8" OD and driver locations required for approval; Architect to confirm stainless steel finish Or approved equal by EFFICIENT-TEC INTERNATIONAL INTENSE LIGHTING

Notes:
1. Contractor shall verify all catalog codes with drawn and written descriptions.
2. Architect to verify all fixture finishes.
3. Architect to verify ceiling type and grid system for light fixture installation. Contractor to coordinate all ceiling materials and thicknesses with fixture trim requirements. Thick ceilings (greater than ¾") may require modifications to fixtures.
4. Electrical Engineer to verify all supply voltages.

PART 4 LUMINAIRE SCHEDULE

TYPE	DESCRIPTION	LAMP/ ELECTRICAL	MANUFACTURER/CATALOG CODE
LX6A	Exterior asymmetric throw LED illuminated handrail system - nominal 130' length Location: Exterior walkway	White LED Color: 3000K CRI: 80 Lumen: 171lm/lf Watt: 4.5W/lf Voltage: 277V Dimming protocol: non-dim	COLE LIGHTING "Light Rail LR5LED" LR5P-LED-SS-INT-FL-ASYM/30°-277 Integral driver; frosted lens, 30° tilt asymmetric distribution; Contractor to coordinate handrail length, configuration and power feed location with architectural drawing - manufacturer's shop drawing showing round railing at 1.9" OD and round posts at 2-3/8" OD and driver locations required for approval; Architect to confirm stainless steel finish Or approved equal by EFFICIENT-TEC INTERNATIONAL INTENSE LIGHTING

THE CATALOG CUTS THAT FOLLOW ARE PART OF SECTION 265100

Notes:
1. Contractor shall verify all catalog codes with drawn and written descriptions.
2. Architect to verify all fixture finishes.
3. Architect to verify ceiling type and grid system for light fixture installation. Contractor to coordinate all ceiling materials and thicknesses with fixture trim requirements. Thick ceilings (greater than ¾") may require modifications to fixtures.
4. Electrical Engineer to verify all supply voltages.

SLIM SurroundLite™ PENDANT SEMI-DIRECT

TYPE L1, L1A

axis LIGHTING
[F] 514.948.6271
www.axislighting.com

PROJECT INFORMATION

Project:

Type:

Notes:

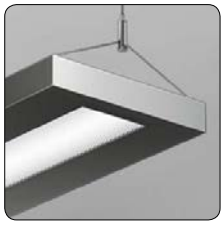

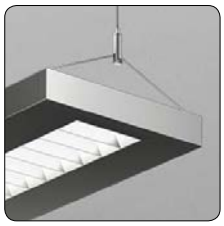

LED BOARD & DRIVER 5 YEAR LUMINAIRE WARRANTY

DIMENSIONS - SECTION VIEWS

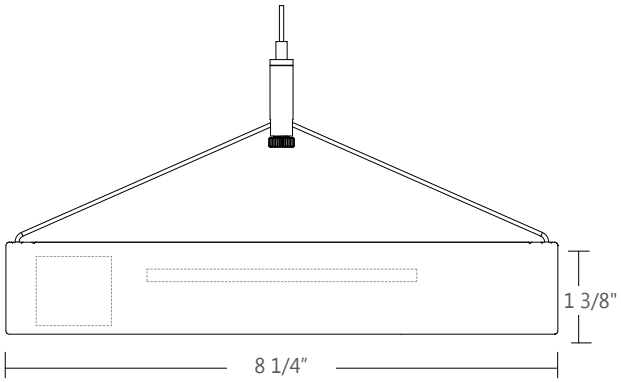

PERFORMANCE/LINEAR FT AT 3000K AND 3500K

	NOMINAL LUMEN OUTPUT		INPUT WATTS	EFFICACY
DISTRIBUTION	UP	DOWN		
25up/75down at 1000 lm/ft	250 lm/ft(1)	750 lm/ft(1)		
25up/75down at 800 lm/ft	200 lm/ft(1)	600 lm/ft(1)	41.8 W	79 lm/W
35up/65down at 1000 lm/ft	350lm/ft(1)	650lm/ft(1)		
35up/65down at 800 lm/ft	280lm/ft(1)	520lm/ft(1)	41.8 W	82 lm/W

(1) Multiply values by 1.18 for 4000K
REFER TO PHOTOMETRIC DATA SECTION FOR EXACT VALUES

VL optic™ CONTROL SENSORS SurroundLite™

ORDERING CODE

1	2	3	4	5	6	7	8	9	10	11	12	13	14	15	16	17

PRODUCT SPECIFICATIONS

1	PRODUCT ID	2	VERSION	3	LIGHT ENGINE	4	NOMINAL LUMENS/FT	5	COLOR TEMP. (KELVIN)
SLLED	pendant led	B3	version 3	EL 25/75	edgelit 25%up/75%down	1000	1000 lm/ft	35	3500 K
				EL 35/65	edgelit 35%up/65%down	800	800 lm/ft	30	3000 K
								40	4000 K
							Consult factory for other lumen packages		

6	SHEILDING	7	SHEILDING LENGTH (FT)	8	FIXTURE LENGTH (FT)	9	FINISH	10	VOLTAGE	11	DRIVER
VL	VL optic	4	4'	4	4'	AP	aluminum paint	120	120V	D	control ready(2) 0-10V
PL	flat-blade louvers	8	8' (1)	8	8'	W	white	277	277V	LT	lutron
SM	smooth lens			12	12'	C	custom	347	347V	O	other-specify
				S#	System Run			UNV	universal		
		1) For PL and SM only								2) Integrated standard dimming	

12	CIRCUITS	13	MOUNTING/SUSPENSION	14	BATTERY	15	OTHER	16	IC CONTROLS	17	CUSTOM
1	1 circuit	CA#	drywall+cable length (36" std.)	B#	battery pack 4' sections	F	fuse	DS#	daylight sensor	C	custom
2	2 circuits(3)	CT9#	TB/TG 9/16+cable length (36" std.)					OS#	occupancy sensor		
2A/B	2 circuit(3) alternating/4ft	CT15#	TB/TG15/16+cable length (36" std.)					DOS#	daylight & occupency sensor		
+E#	emergency section	CTS#	ST+cable length (36" std.)								
+NL#	night light section	SA#	drywall+stem length >48" (18" std.)								
+GTD#	generator transfer device	+SM	seismic option								
3) Use with minimum 8ft length		See Ceiling Mount Guide for more details		Remote only				See Integrated Controls Guide for further details		Please specify	

Driver, Battery Pack and Integrated Control Details and Custom Description:

FILE NAME:SLSD-LED-B3-EL.SPEC June 3, 2014

Conformed Set - May 29, 2015

Product design and development is an ongoing process at Axis Lighting. We reserve the right to change specifications. Contact Axis for the latest product information.

© 2011 Axis Lighting Inc.

axis LIGHTING
[F] 514.948.6271
www.axislighting.com

LIGHT GUIDE

High precision light guide made of PMMA material, allows distribution of controlled light in all 3-dimensions to put light on both vertical and horizontal planes within the space. Patented lightguide design featuring molecular optics and precision-coupled optic components yield a high efficiency luminaire. In-plane mixing maximizes color uniformity while light emitting area is uniform and diffuse without 'head lighting' from the LED's.

LENGTHS

SLIM 4ft (4)

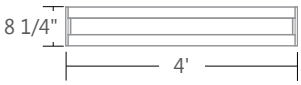

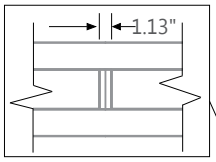

For all fixture lengths

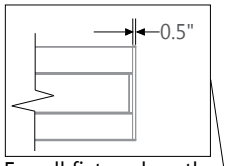

For all fixture lengths

SLIM 8ft (with 4' sheilding)

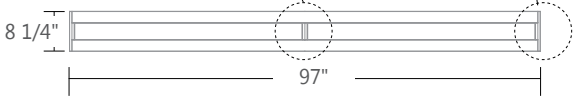

SLIM 8ft Continuous (with 8' sheilding)

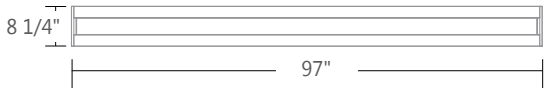

SLIM 12ft (with 4' sheilding)

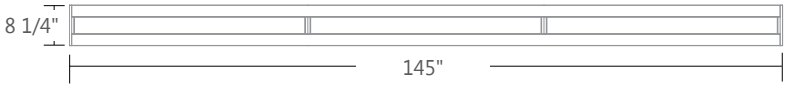

SYSTEMS (S#)

Runs of SLIM that are greater than 8ft in length are designated as systems (S#). This means that the run is comprised of a combination 4ft and/or 8ft sections to be assembled on site using our joining system. For more information on systems and joining, please refer to the SLIM installation sheets available at: www.axislighting.com under 'Downloads' tab.

WEIGHT

SLIM 4 ft	8.8 lbs / 4 Kg
SLIM 8 ft	17.6 lbs / 8 Kg
SLIM 12 ft	26.5 lbs / 12 Kg

OPTICS

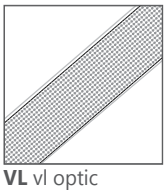

VL vl optic

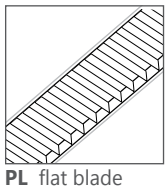

PL flat blade louvers

SM smooth lens

SUSPENSION / MOUNTING SPACING

Between Mounting Points:
SLIM 4' 48"
SLIM 8' 96"
SLIM 12' 144"

Standard Suspension Length (Adjustable):
CABLE: 36"
STEM: 18"

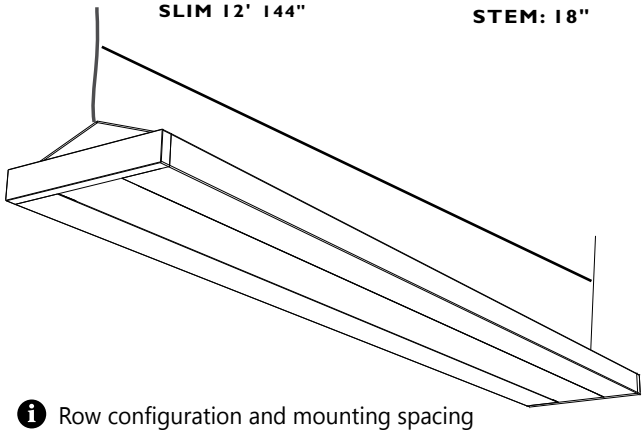

Row configuration and mounting spacing file is available at: www.axislighting.com under 'Downloads' tab.

Conformed Set - May 29, 2015

Product design and development is an ongoing process at Axis Lighting. We reserve the right to change specifications. Contact Axis for the latest product information.

© 2011 Axis Lighting Inc.

MOUNTING OPTIONS

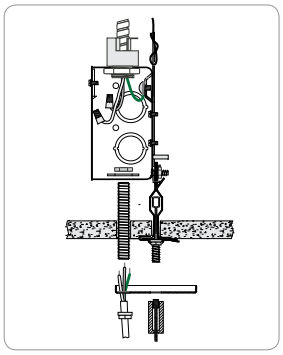

CT TILE CEILING - ON GRID

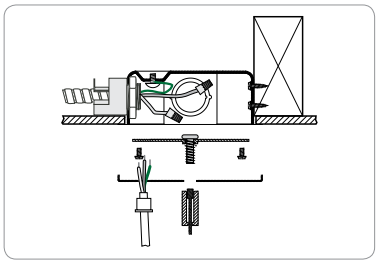

CA DRYWALL CEILING

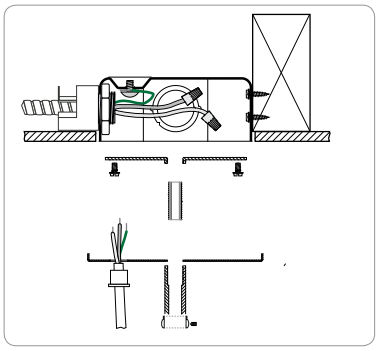

SA STEM MOUNT IN DRYWALL CEILING

Mounting options are also available for slope ceiling and seismic bracing.

Installation sheets for all mounting options are available at: www.axislighting.com under 'Downloads' tab.

OTHER MOUNTING OPTIONS

SLIM is also avalable as a wall mount.

Specification sheets for pendant mounted SLIM luminaires are available at: www.axislighting.com under 'Downloads' tab.

CONSTRUCTION

Housing	Extruded aluminium (0.075" nominal)
End Cap	Die cast aluminium (0.10" nominal)
Joiners	Die cast aluminium (0.10" nominal)
Interior Bracket	Die formed zintec (22 gauge)
Top Covers	Cold rolled sheet steel painted (24 gauge)
VL optic™	PMMA Precision formed microconical structure; 92 percent transmission that cuts off glare above 55 degrees
Smooth Lens	Uniform frosted acrylic lens
Flat blade louvers	Semispecular aluminum material (electronically anodized) for added visual comfort

LED SYSTEM

CRI	Minimum 80 color rendering index
CCT	Choice of 3000K, 3500K and 4000K color temperature with a great color consistency (within 3–step MacAdam ellipse).Both within fixture and fixture to fixture.
LED life	Minimum 50,000h with 85% of lumen maintenance in 25°C ambient temperature, in compliance with IES LM-80 testing measuremrnts.
Thermal Management	Aluminium housing acting as the heat spreader to maximize life.
Environment	Dry and damp rated in operating ambient temperatures of 0-40°C (32-104F)

ELECTRICAL

Controls ready driver	Dimming 0-10V
Lutron driver	L3D Hi-Lume series A. Digit link and 3-wire options
Other driver	DALI, tunable output or specify
Emergency	Emergency battery pack remote only or emergency circuit optional.
Input Voltage	120V, 277V, 347V, UNV.
Power Factor	>0.9
Class	Class 2 output
Wire Connectors	Electrical connections are made with quick connectors

FINISH

Aluminium paint, Powder Coated and custom finishes are also available.

APPROVALS

Certified to UL and CUL standards

Conformed Set - May 29, 2015

Product design and development is an ongoing process at Axis Lighting. We reserve the right to change specifications. Contact Axis for the latest product information.

© 2011 Axis Lighting Inc.

axis LIGHTING
[F] 514.948.6271
www.axislighting.com

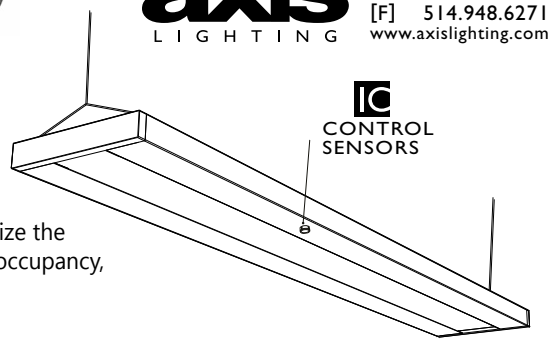

INTEGRATED CONTROL OPTIONS

SLIM luminaires allow the use of integrated controls such as daylight sensors (DS), occupancy sensors (OS), individual daylight sensors and occupancy sensors (DS+OS), and combination daylight/occupancy sensors (DOS). These options can be seamlessly integrated into our luminaires. The control system could be used to optimize the lighting of the space by reducing energy consumption through daylight harvesting and occupancy, thereby improving the overall interior environment and allowing for LEED credits.

- Consult factory for other options.
- Refer to IC brochure for more information.

SENSORS	BRAND	Model	TYPE	CODE
Daylight Sensor (DS)	Lutron	EC-DIR-WH	Daylight	LD
	Wattstopper	FD-301	Daylight	WD
	Philips	Luxsense	Daylight	PL
	Philips	Micro Luxsense	Daylight	MPL
Occupancy Sensor (OS)	Wattstopper	FS-205	PIR Occupancy	WP1
		FS-355	PIR Occupancy	WP2
		FS-155	PIR Occupancy	WP3
		FS-505	Ultrasonic Occupancy	WU1
		FS-505C	Ultrasonic Occupancy	WU2
Daylight & Occupancy Sensors (DOS)	Philips	Actilume	Daylight & PIR Occupancy	PA

Conformed Set - May 29, 2015

Product design and development is an ongoing process at Axis Lighting. We reserve the right to change specifications. Contact Axis for the latest product information.

© 2011 Axis Lighting Inc.

PHOTOMETRIC DATA

VL LENS (VL)

25% up / 75% down at 800 lm/ft (at 3300K)

PHOTOMETRIC CURVE

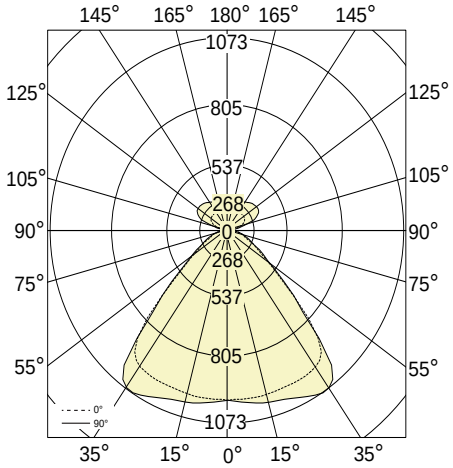

Actual Luminaire Lumens: 201lm/ft up
627lm/ft down

Total Lumens: 3313 lm
Input Watts: 41.8 W
Efficacy: 79 lm/W

IES FILE: SLLED-B3-EL-25-75-800-35-VL-4-4-W-120-D-1.IES

CANDELA DISTRIBUTION

	Horizontal Angles					Zonal Lumens
Vertical Angle	0	22.5	45	67.5	90	
0	946	946	946	946	946	
5	944	949	949	957	960	23
15	944	954	968	984	990	69
25	939	957	988	1017	1029	114
35	928	959	1000	1044	1072	157
45	690	671	656	653	642	128
55	278	299	305	300	293	67
65	150	161	155	153	161	39
75	90	94	89	84	89	24
85	35	30	31	30	23	8
90	0	0	0	0	0	
95	23	22	24	23	24	6
105	75	93	110	105	106	26
115	109	133	164	190	201	40
125	121	148	182	208	217	40
135	123	147	178	200	207	33
145	123	142	167	184	189	26
155	125	143	153	165	167	18
165	124	131	145	146	146	10
175	121	122	123	125	125	3
180	120	120	120	120	120	0

LUMINANCE DATA (CD/M²)

	Horizontal Angles		
Vertical Angle	0	45	90
45	9585	9113	8918
55	4761	5223	5018
65	3486	3603	3742
75	3416	3378	3378
85	3945	3494	2592

VL LENS (VL)

35% up / 65% down at 800 lm/ft (at 3300K)

PHOTOMETRIC CURVE

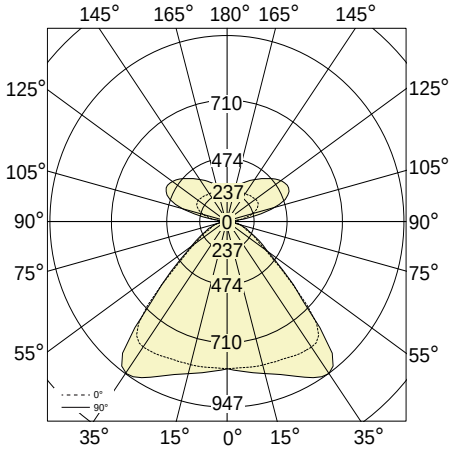

Actual Luminaire Lumens: 318 lm/ft up
538 lm/ft down

Total lumens: 3423 lm
Input Watts: 41.8 W
Efficacy: 82 lm/W

IES FILE: SLLED-B3-EL-35-65-800-35-VL-4-4-W-120-D-1.IES

CANDELA DISTRIBUTION

	Horizontal Angles					Zonal Lumens
Vertical Angle	0	22.5	45	67.5	90	
0	752	752	752	752	752	
5	750	755	756	762	766	18
15	757	767	781	797	805	55
25	767	785	824	860	873	95
35	783	821	870	919	947	137
45	605	590	582	583	574	114
55	245	263	269	265	260	59
65	131	140	136	134	141	34
75	78	81	76	73	76	20
85	30	25	27	26	19	7
90	0	0	0	0	0	
95	40	48	40	35	26	11
105	128	160	206	234	243	52
115	180	218	281	341	364	69
125	190	227	287	339	358	63
135	181	212	258	297	310	49
145	172	195	228	254	263	35
155	167	187	203	218	222	23
165	161	170	186	190	190	13
175	153	154	157	159	158	4
180	152	152	152	152	152	0

LUMINANCE DATA (CD/M²)

	Horizontal Angles		
Vertical Angle	0	45	90
45	8404	8085	7974
55	4196	4607	4453
65	3045	3161	3277
75	2960	2884	2884
85	3381	3043	2141

All IES files are available for download at: www.axislighting.com

Conformed Set - May 29, 2015

Product design and development is an ongoing process at Axis Lighting. We reserve the right to change specifications. Contact Axis for the latest product information.

© 2011 Axis Lighting Inc.

TYPE L2 SERIES

gotham®

Luminaire Type:
Catalog Number
(autopopulated):

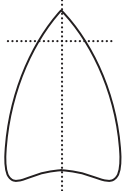

Gotham Architectural Downlighting
LED Downlights

4" Evo®
Open Reflector

Solid-State Lighting

ENERGY STAR

FEATURES

OPTICAL SYSTEM
- Self-flanged semi-specular, matte-diffuse or specular lower reflector
- Patented Bounding Ray™ optical design (U.S. Patent No. 5,800,050)
- 45° cutoff to source and source image
- Top-down flash characteristic

MECHANICAL SYSTEM
- 16-gauge galvanized steel construction; maximum 1-1/2" ceiling thickness
- Telescopic mounting bars maximum of 32" and minimum of 15", preinstalled, 4" vertical adjustment
- Toolless adjustments post installation
- Junction box capacity: 8 (4 in, 4 out) 12AWG rated for 90°C
- Light engine and driver accessible through aperture

ELECTRICAL SYSTEM
- Fully serviceable and upgradeable lensed LED light engine
- 70% lumen maintenance at 60,000 hours based on IESNA LM-79-2008
- 120-277VAC, 50/60hz power supply with 0-10V dimming (10-100%); rated for 50,000-hour life
- Overload and short circuit protected
- LEDs tested under LM80

LISTINGS
- Fixtures are CSA certified to meet US and Canadian standards; wet location, covered ceiling

WARRANTY
- 5-year limited warranty. Complete warranty terms located at: www.acuitybrands.com/CustomerResources/Terms_and_conditions.aspx

ORDERING INFORMATION

EXAMPLE: EVO 35/10 4AR 120

Series	Color temperature		Nominal lumen values		Aperture/Trim color		Distribution		Finish		Voltage
EVO	**27/**	2700 K	**06**	600 lumens	**4AR**	Clear	(blank)	1.0 s/mh	(blank)	Semi-specular	**120**
	30/	3000 K	**10**	1000 lumens	**4PR**	Pewter	**MD**	Medium (0.8 s/mh)	**LD**	Matte diffuse	**277**
	35/	3500 K	**14**	1400 lumens	**4WTR**	Wheat	**WD**	Wide (1.5 s/mh)	**LS**	Specular	**347**
	41/	4100 K	**18**	1800 lumens	**4GR**	Gold					
			20	2000 lumens	**4WR**[1]	White					

Driver		Options			
(blank)[2]	0-10V dimming driver. Minimum dimming level 10%	**SF**	Single fuse	**TRBL**	Black painted flange
ECOS2[3,4]	Lutron® Hi-Lume® 2-wire forward-phase dimming driver. Minimum dimming level 1%	**RRL**	RELOC®-ready luminaire. Provides compatibility with Lithonia RELOC system. Access above ceiling required.	**EL**[7]	Emergency battery pack with integral test switch
ECOS3[2,3]	Lutron® Hi-Lume® 3-wire or EcoSystem® dimming driver. Minimum dimming level 1%	**NEPP**	Interface for Sensor Switch® nLight® network with integral power supply. Refer to TN-623-01.	**ELR**[7]	Emergency battery pack with remote test switch
		NSD[5]	Sensor Switch® nLight® dimming relay	**CP**[8]	Chicago plenum
		TRW[6]	White painted flange	**BGTD**	Bodine generator transfer device

ACCESSORIES order as separate catalog numbers (shipped separately)

SCA4	Sloped ceiling adapter. Degree of slope must be specified (10D, 15D, 20D, 25D, 30D). Ex: SCA4 10D. Refer to TECH-190.
CTA4-8 YK	Ceiling thickness adapter (extends mounting frame to accommodate ceiling thickness up to 2").
ISD BC	0-10V wallbox dimmer. Refer to ISD-BC.

NOTES

ORDERING NOTES

1. Not available with finishes.
2. Refer to TECH-240 for compatible dimmers.
3. Not available with NEPP option.
4. 120V only.
5. One 5A relay with one 0-10 VDC dimming output, shipped installed. Refer to nSP5-D.
6. Not available with white reflector.
7. For dimensional changes, refer to TECH-140. Access above ceiling required. Not available with CP option.
8. Not available with EL or ELR options.

GOTHAM ARCHITECTURAL DOWNLIGHTING | 1400 Lester Road Conyers GA 30012 | P 800.315.4982 | gothamlighting.com

Conformed Set - May 29, 2015

© 2010-2013 Acuity Brands Lighting, Inc. All Rights Reserved. Rev. 10/09/13. Specifications subject to change without notice.

gotham®

DIMENSIONAL DATA

All dimensions are inches (centimeters) unless otherwise noted.

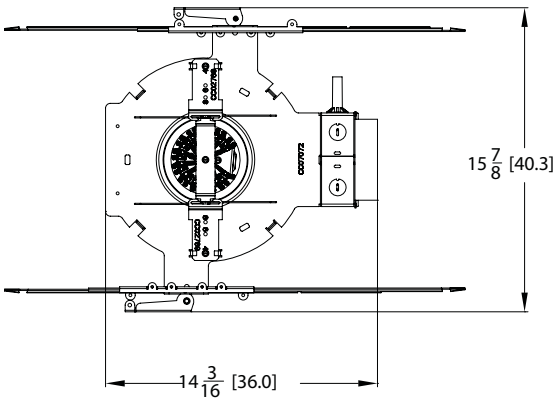

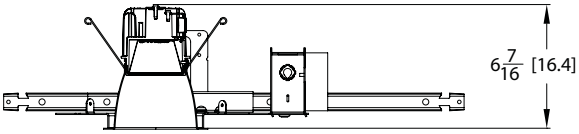

Aperture: 4-5/16 (11)
Ceiling Opening: 5-1/8 (13)
Overlap Trim: 5-7/16 (13.8)

ELECTRICAL

WATTAGE CONSUMPTION MATRIX		
LUMENS	WATTAGE	LUMENS per WATT
2000	31	65
1800	29	58
1400	26	55
1000	21	51
600	16	49

Conformed Set - May 29, 2015
© 2010-2013 Acuity Brands Lighting, Inc. All Rights Reserved. Rev. 10/09/13. Specifications subject to change without notice.

PHOTOMETRY

Distribution Curve	Distribution Data	Output Data	Coefficient of Utilization	Illuminance: Single Luminaire 30" Above Floor

EVO 35/6 4AR LS

INPUT WATTS: 15.6, DELIVERED LUMENS: 757.7, LM/W=48.6, 1.6 S/MH, TEST NO. LTL21260

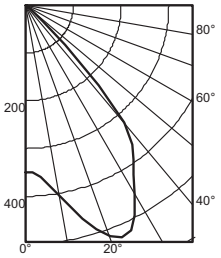

	Ave	Lumens
0	349	
5	361	36
15	463	133
25	520	234
35	393	245
45	117	105
55	2	4
65	1	1
75	0	0
85	0	0
90	0	

Zone	Lumens	% Lamp
0° - 30°	402.6	53.1
0° - 40°	647.4	85.4
0° - 60°	756.6	99.9
0° - 90°	757.7	100.0
90° - 180°	0.0	0.0
0° - 180°	757.7	*100.0

*Efficiency

pf / pc / pw	80% 50%	80% 30%	80% 10%	20% 70% 50%	20% 70% 30%	20% 70% 10%	50% 50%	50% 30%	50% 10%
0	119	119	119	116	116	116	111	111	111
1	110	107	105	108	105	103	104	102	100
2	101	97	93	99	95	92	96	93	90
3	93	87	83	92	86	82	89	85	81
4	86	79	75	84	79	74	82	77	73
5	79	72	68	78	72	67	76	71	67
6	73	66	61	72	66	61	71	65	61
7	68	61	56	67	60	56	65	60	55
8	63	56	51	62	56	51	61	55	51
9	58	51	47	58	51	47	57	51	47
10	54	48	43	54	47	43	53	47	43

Mounting Height	Inital FC Center Beam	50% beam - 76.1° Diameter	50% beam - 76.1° FC	10% beam - 91.1° Diameter	10% beam - 91.1° FC
8.0	11.5	8.6	5.8	11.2	1.2
10.0	6.2	11.7	3.1	15.3	0.6
12.0	3.9	14.9	1.9	19.4	0.4
14.0	2.6	18.0	1.3	23.5	0.3
16.0	1.9	21.1	1.0	27.5	0.2

EVO 35/10 4AR LS

INPUT WATTS: 20.6, DELIVERED LUMENS: 1039.0, LM/W=50.4, 1.5 S/MH, TEST NO. LTL21209

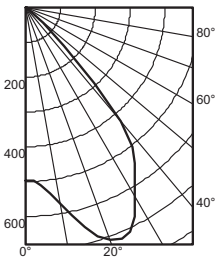

	Ave	Lumens
0	497	
5	513	51
15	653	186
25	709	320
35	547	337
45	156	138
55	3	5
65	1	1
75	0	0
85	0	0
90	0	

Zone	Lumens	% Lamp
0° - 30°	557.2	53.6
0° - 40°	894.6	86.1
0° - 60°	1037.7	99.9
0° - 90°	1039.0	100.0
90° - 180°	0.0	0.0
0° - 180°	1039.0	*100.0

*Efficiency

pf / pc / pw	80% 50%	80% 30%	80% 10%	20% 70% 50%	20% 70% 30%	20% 70% 10%	50% 50%	50% 30%	50% 10%
0	119	119	119	116	116	116	111	111	111
1	110	107	105	108	105	103	104	102	100
2	101	97	93	99	95	92	96	93	90
3	93	88	83	92	87	83	89	85	81
4	86	80	75	85	79	74	82	77	74
5	79	73	68	78	72	68	76	71	67
6	73	66	62	72	66	61	71	65	61
7	68	61	56	67	61	56	66	60	56
8	63	56	51	62	56	51	61	55	51
9	58	52	47	58	52	47	57	51	47
10	54	48	44	54	48	44	53	47	43

Mounting Height	Inital FC Center Beam	50% beam - 75.3° Diameter	50% beam - 75.3° FC	10% beam - 90.7° Diameter	10% beam - 90.7° FC
8.0	16.4	8.5	8.2	11.1	1.6
10.0	8.8	11.6	4.4	15.2	0.9
12.0	5.5	14.7	2.8	19.2	0.6
14.0	3.8	17.7	1.9	23.3	0.4
16.0	2.7	20.8	1.4	27.3	0.3

EVO 35/14 4AR LS

INPUT WATTS: 26.2, DELIVERED LUMENS: 1431.9, LM/W=54.7, 1.5 S/MH, TEST NO. LTL21213

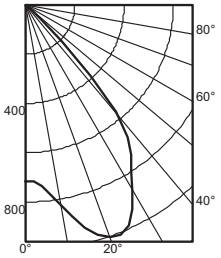

	Ave	Lumens
0	716	
5	738	73
15	934	265
25	986	445
35	743	458
45	203	182
55	4	6
65	1	1
75	0	0
85	0	0
90	0	

Zone	Lumens	% Lamp
0° - 30°	784.3	54.8
0° - 40°	1242.2	86.8
0° - 60°	1430.4	99.9
0° - 90°	1431.9	100.0
90° - 180°	0.0	0.0
0° - 180°	1431.9	*100.0

*Efficiency

pf / pc / pw	80% 50%	80% 30%	80% 10%	20% 70% 50%	20% 70% 30%	20% 70% 10%	50% 50%	50% 30%	50% 10%
0	119	119	119	116	116	116	111	111	111
1	110	107	105	108	105	103	104	102	100
2	101	97	93	100	96	92	96	93	90
3	93	88	83	92	87	83	89	85	81
4	86	80	75	85	79	75	83	78	74
5	80	73	68	79	72	68	77	71	67
6	74	67	62	73	66	62	71	66	61
7	68	61	57	67	61	57	66	60	56
8	63	57	52	63	56	52	62	56	52
9	59	52	48	58	52	48	57	52	48
10	55	48	44	54	48	44	54	48	44

Mounting Height	Inital FC Center Beam	50% beam - 73.6° Diameter	50% beam - 73.6° FC	10% beam - 90.0° Diameter	10% beam - 90.0° FC
8.0	23.7	8.2	11.8	11.0	2.4
10.0	12.7	11.2	6.4	15.0	1.3
12.0	7.9	14.2	4.0	19.0	0.8
14.0	5.4	17.2	2.7	23.0	0.5
16.0	3.9	20.2	2.0	27.0	0.4

EVO 35/18 4AR LS

INPUT WATTS: 29.0, DELIVERED LUMENS: 1682.7, LM/W=58.0, 1.5 S/MH, TEST NO. LTL21149

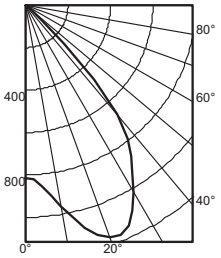

	Ave	Lumens
0	813	
5	854	85
15	1086	308
25	1149	519
35	869	536
45	256	223
55	6	9
65	2	2
75	1	1
85	0	0
90	0	

Zone	Lumens	% Lamp
0° - 30°	913.1	54.3
0° - 40°	1449.4	86.1
0° - 60°	1680.5	99.9
0° - 90°	1682.7	100.0
90° - 180°	0.0	0.0
0° - 180°	1682.7	*100.0

*Efficiency

pf / pc / pw	80% 50%	80% 30%	80% 10%	20% 70% 50%	20% 70% 30%	20% 70% 10%	50% 50%	50% 30%	50% 10%
0	119	119	119	116	116	116	111	111	111
1	110	107	105	108	105	103	104	102	100
2	101	97	93	99	95	92	96	93	90
3	93	88	83	92	87	83	89	85	81
4	86	80	75	85	79	75	83	78	74
5	79	73	68	78	72	68	77	71	67
6	73	67	62	73	66	62	71	65	61
7	68	61	56	67	61	56	66	60	56
8	63	56	52	62	56	52	61	56	51
9	59	52	48	58	52	47	57	51	47
10	55	48	44	54	48	44	53	48	44

Mounting Height	Inital FC Center Beam	50% beam - 74.3° Diameter	50% beam - 74.3° FC	10% beam - 90.7° Diameter	10% beam - 90.7° FC
8.0	26.9	8.3	13.4	11.1	2.7
10.0	14.5	11.4	7.2	15.2	1.4
12.0	9.0	14.4	4.5	19.2	0.9
14.0	6.1	17.4	3.1	23.3	0.6
16.0	4.5	20.5	2.2	27.3	0.4

PHOTOMETRY NOTES

- Tested in accordance with IESNA LM-79-08.
- Tested to current IES and NEMA standards under stabilized laboratory conditions.
- Actual performance may differ as a result of end-user environment and application.
- Actual wattage may differ by +/- 10% when operating between 120-277V +/- 10%.
- CRI: 83 typical.
- Consult factory or IES file for microgroove baffle, black cone or other photometric reports.

Conformed Set - May 29, 2015

© 2010-2013 Acuity Brands Lighting, Inc. All Rights Reserved. Rev. 10/09/13. Specifications subject to change without notice.

TYPE L3 SERIES

gotham®

Luminaire Type:
Catalog Number
(autopopulated):

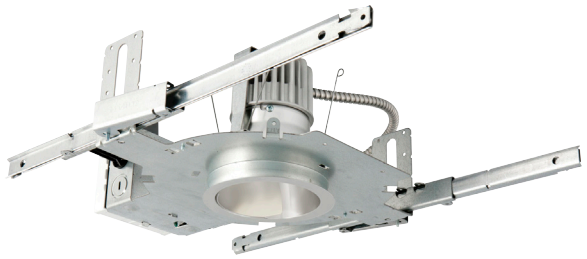

Gotham Architectural Downlighting
LED Downlights

4" Evo®
Open Wallwash

Solid-State Lighting

FEATURES

OPTICAL SYSTEM
- Self-flanged semi-specular, matte-diffuse or specular lower reflector
- Patented Bounding Ray™ optical design (U.S. Patent No. 5,800,050)
- 45° cutoff to source and source image
- Anodized kicker reflector

MECHANICAL SYSTEM
- 16-gauge galvanized steel construction; maximum 1-1/2" ceiling thickness
- Telescopic mounting bars maximum of 32" and minimum of 15", preinstalled, 4" vertical adjustment
- Toolless adjustments post installation
- Junction box capacity: 8 (4 in, 4 out) 12AWG rated for 90°C
- Light engine and driver accessible through aperture

ELECTRICAL SYSTEM
- Fully serviceable and upgradeable LED light engine
- 70% lumen maintenance at 60,000 hours based on IESNA LM-79-2008
- 120-277VAC, 50/60hz power supply with 0-10V dimming (10-100%); rated for 50,000-hour life
- Overload and short circuit protected

LISTINGS
- Fixtures are CSA certified to meet US and Canadian standards; wet location, covered ceiling

WARRANTY
- 5-year limited warranty. Complete warranty terms located at: www.acuitybrands.com/CustomerResources/Terms_and_conditions.aspx

ORDERING INFORMATION

EXAMPLE: EVO WW 35/10 4AR 120

Series	Type	Color temperature	Nominal lumen values	Aperture/Trim color	Finish	Voltage	Driver
EVO	**WW**	**27/** 2700 K **30/** 3000 K **35/** 3500 K **41/** 4100 K	**06** 600 lumens **10** 1000 lumens **14** 1400 lumens **18** 1800 lumens **20** 2000 lumens	**4AR** Clear **4PR** Pewter **4WTR** Wheat **4GR** Gold **4WR**[1] White	(blank) Semi-specular **LD** Matte diffuse **LS** Specular	**120** **277** **347**	(blank)[2] 0-10V dimming driver. Minimum dimming level 10% **ECOS2**[3,4] Lutron® Hi-Lume® 2-wire forward-phase dimming driver. Minimum dimming level 1% **ECOS3**[2,3] Lutron® Hi-Lume® 3-wire or EcoSystem® dimming driver. Minimum dimming level 1%

Options			
SF	Single fuse	**TRBL**	Black painted flange
RRL	RELOC®-ready luminaire. Provides compatibility with Lithonia RELOC system. Access above ceiling required.	**EL**[6]	Emergency battery pack with integral test switch
NEPP	Interface for Sensor Switch® nLight® network with integral power supply. Refer to TN-623-01.	**ELR**[6]	Emergency battery pack with remote test switch
TRW[5]	White painted flange	**CP**[7]	Chicago plenum
NSD	Sensor Switch® nLight® dimming relay. One 5A relay with one 0-10 VDC dimming output, shipped installed. Refer to nSP5-D.	**BGTD**	Bodine generator transfer device

ACCESSORIES order as separate catalog numbers (shipped separately)	
CTA4-8 YK	Ceiling thickness adapter (extends mounting frame to accommodate ceiling thickness up to 2").
ISD BC	0-10V wallbox dimmer. Refer to ISD-BC.

NOTES

ORDERING NOTES

1. Not available with finishes.
2. Refer to TECH-240 for compatible dimmers.
3. Not available with NEPP option.
4. 120V only.
5. Not available with white reflector.
6. For dimensional changes, refer to TECH-140. Access above ceiling required. Not available with CP option.
7. Not available with EL or ELR options.

GOTHAM ARCHITECTURAL DOWNLIGHTING | 1400 Lester Road Conyers GA 30012 | P 800.315.4982 | gothamlighting.com
Conformed Set - May 29, 2015
© 2010-2013 Acuity Brands Lighting, Inc. All Rights Reserved. Rev. 10/31/13. Specifications subject to change without notice.
gotham®

DIMENSIONAL DATA

All dimensions are inches (centimeters) unless otherwise noted.

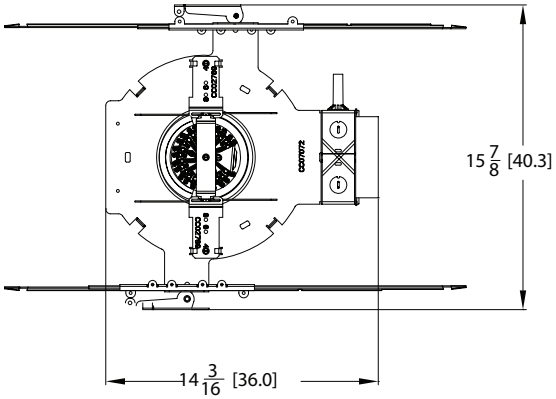

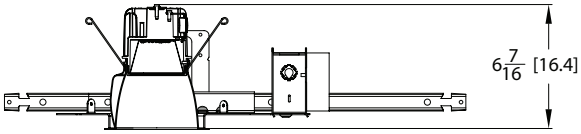

Aperture: 4-5/16 (11)
Ceiling Opening: 5-1/8 (13)
Overlap Trim: 5-7/16 (13.8)

Conformed Set - May 29, 2015
© 2010-2013 Acuity Brands Lighting, Inc. All Rights Reserved. Rev. 10/31/13. Specifications subject to change without notice.

gotham®

4" EVO
Open Wallwash
Solid-State Lighting

PHOTOMETRY

TECHNICAL INFORMATION
Footcandle values are initial and tables are based on minimum of six units. For fixture-to-wall distance other than those shown, use maximum of one-to-one spacing (distance between fixtures not more than distance to wall) for best results.

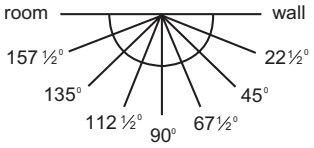

Candlepower Data — Footcandle values

EVO WW 35/10 4AR

INPUT WATTS: 20.5, DELIVERED LUMENS: 1012.4, LM/W=49.4, TEST NO. LTL21208

Vertical Angle	Plane angle: Wall	22.5	45	67.5	90	112.5	135	157.5
0	414	414	414	414	414	414	414	414
5	401	407	418	431	442	450	456	459
15	390	408	448	499	542	568	573	569
25	328	349	419	514	593	628	630	620
35	198	217	293	381	461	497	491	475
45	143	161	191	194	185	207	208	204
55	206	212	181	88	17	14	14	14
65	192	184	152	62	7	6	6	7
75	113	107	89	32	4	4	7	9
85	30	25	20	4	1	1	1	2
90	4	1	0	0	0	0	0	0

Wallwash Illuminance Study (fc)
Illuminance on wall from 6 luminaires

ft. from ceiling	Luminaire mounted 3 ft. from wall, 3 ft. between luminaires: 3	3.5	4	Luminaire mounted 3 ft. from wall, 4 ft. between luminaires: 3	3.5	4	Luminaire mounted 3 ft. from wall, 5 ft. between luminaires: 3	3.5	4
1	19	18	19	15	12	15	14	8	14
2	23	24	23	17	17	17	15	13	15
3	15	15	15	10	12	10	8	10	8
4	11	11	11	8	9	8	6	7	6
5	10	10	10	8	8	8	6	6	6
6	9	9	9	7	7	7	6	6	6
7	8	8	8	6	6	6	5	5	5
8	7	7	7	5	5	5	4	4	4
9	6	6	6	4	4	4	3	4	3
10	5	5	5	4	4	4	3	3	3

EVO WW 35/14 4AR

INPUT WATTS: 26.3, DELIVERED LUMENS: 1368.2, LM/W=52.0, TEST NO. LTL21212

Vertical Angle	Plane angle: Wall	22.5	45	67.5	90	112.5	135	157.5
0	606	606	606	606	606	606	606	606
5	584	588	601	617	632	644	651	655
15	553	577	632	698	753	783	790	791
25	449	479	578	707	800	837	832	816
35	270	286	389	510	609	659	653	631
45	203	227	254	262	259	288	291	285
55	275	286	251	132	28	26	30	31
65	232	227	197	89	11	9	10	11
75	133	128	111	44	7	7	8	9
85	30	25	22	6	1	1	2	2
90	1	0	0	0	0	0	0	0

Wallwash Illuminance Study (fc)
Illuminance on wall from 6 luminaires

ft. from ceiling	Luminaire mounted 3 ft. from wall, 3 ft. between luminaires: 3	3.5	4	Luminaire mounted 3 ft. from wall, 4 ft. between luminaires: 3	3.5	4	Luminaire mounted 3 ft. from wall, 5 ft. between luminaires: 3	3.5	4
1	23	21	23	18	15	18	17	10	17
2	31	31	31	23	23	23	20	16	20
3	20	21	20	15	16	15	11	14	11
4	15	15	15	11	12	11	9	10	9
5	14	13	14	10	10	10	8	8	8
6	12	12	12	9	9	9	7	7	7
7	11	10	11	8	8	8	7	7	7
8	9	9	9	7	7	7	6	6	6
9	8	8	8	6	6	6	5	5	5
10	6	7	6	5	5	5	4	4	4

EVO WW 35/18 4AR

INPUT WATTS: 29.0, DELIVERED LUMENS: 1682.7, LM/W=58.0, TEST NO. LTL21152

Vertical Angle	Plane angle: Wall	22.5	45	67.5	90	112.5	135	157.5
0	713	713	713	713	713	713	713	713
5	683	691	708	729	747	760	769	773
15	646	677	745	825	889	923	931	928
25	519	560	679	832	945	985	977	957
35	298	334	467	615	720	776	775	755
45	224	256	301	310	315	351	361	353
55	326	338	296	153	38	33	37	38
65	267	262	228	103	15	11	12	13
75	145	143	126	52	9	9	11	13
85	33	28	25	6	1	2	3	2
90	0	0	0	0	0	0	0	0

Wallwash Illuminance Study (fc)
Illuminance on wall from 6 luminaires

ft. from ceiling	Luminaire mounted 3 ft. from wall, 3 ft. between luminaires: 3	3.5	4	Luminaire mounted 3 ft. from wall, 4 ft. between luminaires: 3	3.5	4	Luminaire mounted 3 ft. from wall, 5 ft. between luminaires: 3	3.5	4
1	26	24	26	21	17	21	19	11	19
2	36	36	36	27	26	27	24	19	24
3	23	24	23	16	19	16	13	16	13
4	17	17	17	13	14	13	10	11	10
5	16	15	16	12	12	12	9	10	9
6	14	15	14	11	11	11	9	9	9
7	12	12	12	9	10	9	8	8	8
8	11	11	11	8	8	8	7	7	7
9	9	9	9	7	7	7	6	6	6
10	8	8	8	6	6	6	5	5	5

PHOTOMETRY NOTES

- Tested in accordance with IESNA LM-79-08.
- Tested to current IES and NEMA standards under stabilized laboratory conditions.
- Actual performance may differ as a result of end-user environment and application.
- Actual wattage may differ by +/- 10% when operating between 120-277V +/- 10%.
- CRI: 83 typical.
- Consult factory or IES file for microgroove baffle, black cone or other photometric reports.

GOTHAM ARCHITECTURAL DOWNLIGHTING | 1400 Lester Road Conyers GA 30012 | P 800.315.4982 | gothamlighting.com
Conformed Set - May 29, 2015
© 2010-2013 Acuity Brands Lighting, Inc. All Rights Reserved. Rev. 10/31/13. Specifications subject to change without notice.
gotham®

MARK
ARCHITECTURAL
LIGHTING™

The **Fin LED** Series

TYPE L4

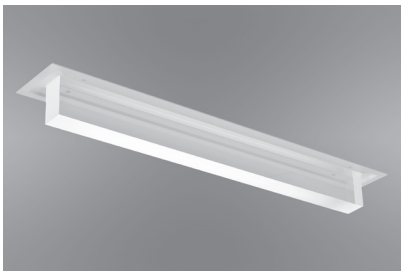

Fin LED is a decorative accent fixture with a clean, geometric form that complements any environment. Versatile and ornamental, it is perfect for making an aesthetic statement, creating intriguing patterns of light or enhancing other design elements.

Fin can be mounted horizontally or vertically and is available in a choice of clear sides with frosted edges or frosted sides with frosted edges. Lengths range from 2 to 8 feet, and the depth below the fixture door can be 2, 3 or 4 inches.

Project:

Catalog Number:

DO NOT TYPE HERE. Autopopulated field.

Specification Features

Housing
Housing and internal components fabricated from 20-gauge, cold-rolled steel.

Finish
Matte white.

Reflector
Precision-formed steel; white.

Shielding
Nominal 1 1/2"-thick acrylic fin.

LED Components
Linear:
Nichia® - LED chips (>80 CRI)
Normal Output: 6 W/LF
Hi Output: 12 W/LF

Driver
AccuDrive LED Driver allows for 0-10V dimming, flicker-free from 2 to 100%. Universal input voltage 120-277VAC, 50/60Hz. Integrated thermal fold-back management to prevent over heating.

Color Consistency
The Acuity Brands circuit boards for the linear LED components use a precise binning algorithm which creates a consistent color temperature from board to board. The color a variation of no greater than a 2.5 Step MacAdam (2.5SDCM) along the black body locus from board to board.

Integrated Controls
Standard nLight® embedded controls make luminaire addressable- allowing it to digitally communicate with other nLight enabled controls such as dimmers, switches, occupancy sensors and photocontrols. Simply connect all the nLight enabled control devices using standard CAT5 Cabling.

Lumen Management
An optional lumen management system provides onboard intelligence that actively manages the LED light source so that constant lumen output is maintained over the system's life, creating a consistently illuminated environment while preventing energy waste. (Option: n80)

Mounting
Recessed in sheetrock ceiling; rod-mounted to structure. Consult factory for other ceiling types.

Certification
CSA Certified to meet U.S. and Canadian standards, rated for Chicago Plenum, and IBEW (Local 3) Union-made in the USA.

Warranty
5-year limited warranty. Complete warranty terms located at www.acuitybrands.com/CustomerResorurces/Terms and conditions.aspx

Notes
1. *Specifications subject to change without notice*
2. *Actual performance may differ as a result of end-user environment and application*

Technical Drawings

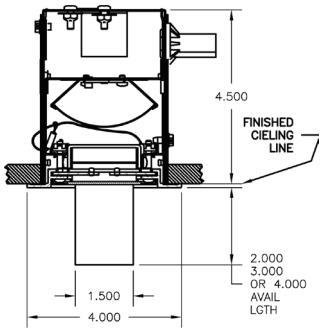

Ordering

Example: FINL 2FT 2D N35AD 120 CF N80

Series	Length	Fin Depth Below Face of Door	Linear LED Output	Linear LED Color Temp	Driver	Voltage	Finish	Integrated Controls	Options
FINL Fin LED	**2FT** 2′	**2D** 2″	**N** 6 W/LF 40 LM/W[3]	**30** 3000K	**AD** 100W constant Current Driver, 0 10V 10% Dimming	**120**	**CF** Clear sides, frosted edges	**(Blank)**[2] N100 nLight with outLumen mgt	**CP** Chicago Plenumo
	3FT 3′	**3D** 3″	**H** 12 W/LF 40 LM/W[3]	**35** 3500K	**HI**[1] 100W constant Current Driver, 0 10V 1% Dimming to Off	**277**	**FF** Frosted sides, frosted edges	**n80**[2] N80 nLight with 80% Lumen mgt	
	4FT 4′	**4D** 4″		**40** 4000K		**347**		**n80EMG**[2] N80 nLight with 80% Lumen mgt for use with generator supply EM power	
	5FT 5′							**n100EMG**[2] N100 nLight with out Lumen mgt for use with generator supply EM power	
	6FT 6′							**NX**[2] Dimming, No nLight	
	8FT 8′							**ECO**[2] Lutron Ecosystem Interface Module)	

Notes
1. HI driver not compatible with nLight
2. nLight option not available for HI driver
3. Delivered Lumens

Conformed Set - May 29, 2015

© 2015 Mark Architectural Lighting. All rights reserved. We reserve the right to change design, materials and finish in any way that will not alter installed appearance or reduce function and performance.

MARK
ARCHITECTURAL
LIGHTING™

The **SPR LED** Series

TYPE L5, L5A

SPR LED combines the environmental and cost-saving benefits of solid-state lighting with the popular SP design. The result is a recessed linear wall product that provides an excellent balance of efficiency and performance.

SPR LED, which features a very compact profile, offers highly uniform illumination along wall surfaces. Housing and vertical fascias are extruded aluminum, and the extruded clear frosted acrylic lens snaps into the housing. SPR LED is available in 8-, 6-, 4-, 3- and 2-foot sections. Corners are available; please consult factory.

Project:

Catalog Number:

DO NOT TYPE HERE. Autopopulated field.

Specification Features

Housing
Housing and vertical fascias are extruded aluminum. Internal wiring trays are 20-gauge, cold-rolled steel.

Housing Finish
Natural Aluminium; Fascia is high reflectance matte white .

Shielding
Extruded clear frost acrylic lens snaps into housing.

LED Components
Linear:
Nichia® - 757A -V1 LED chips (>80 CRI)

Driver
AccuDrive LED Driver allows for 0 10V dimming, flicker-free from 2 to 100%. Universal input voltage 120 277VAC, 50/60Hz. Integrated thermal fold-back management to prevent over heating.

Color Consistency
The Acuity Brands circuit boards for the linear LED components use a precise binning algorithm which creates a consistent color temperature from board to board. Color variation is no greater than a 2.5 Step MacAdam (2.5SDCM) along the black body locus from board to board.

Integrated Controls
Optional nLight® embedded controls make luminaire addressable- allowing it to digitally communicate with other nLight enabled controls such as dimmers, switches, occupancy sensors and photocontrols. Simply connect all the nLight enabled control devices using standard CAT5 Cabling. (Option: N100)

Lumen Management
An optional lumen management system provides onboard intelligence that actively manages the LED light source so that constant lumen output is maintained over the system's life, creating a consistently illuminated environment while preventing energy waste. (Option: N80)

Mounting
Recessed perimeter wall wash in 8', 6', 4', 3' and 2' sections.

Certification
CSA Certified to meet U.S. and Canadian standards, rated for Chicago Plenum, and IBEW (Local 3) Union-made in the USA.

Warranty
5-year limited warranty. Complete warranty terms located at www.acuitybrands.com/CustomerResorurces/Terms and conditions.aspx

Notes
1. Specifications subject to change without notice
2. Actual performance may differ as a result of end-user environment and application

Technical Drawings

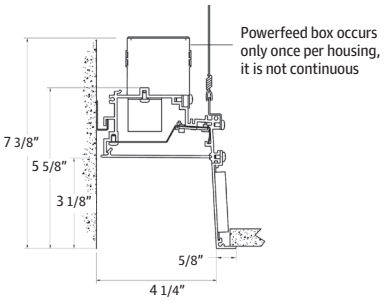

FL
5/8" Flange (Drywall)

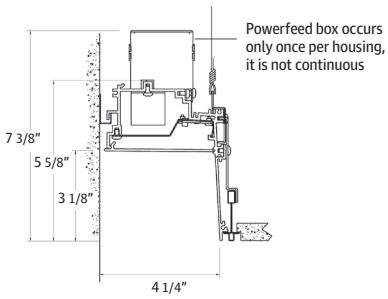

G9
9/16" wide inverted tee

Ordering

Example: SPRL 24FT06IN G9 N35AD 120 FA N100 CP

Series		Length[1]		Ceiling Trim		Linear LED Output		Linear LED Color Temp		Driver		Voltage	Shielding		Integrated Controls		Options	
SPRL	Fully recessed SP LED	**__ft.**	Provide wall-to-wall dimensions	**G9**	9/16" wide inverted tee	**N**	Normal Output	**30**	3000K	**AD**	100W constant Current Driver, 0-10V 2% Dimming	**120**	**FA**	Clear frosted acrylic	**N100**	N100 nLight with outLumen mgt	**CP**	Chicago Plenum
		__in.		**FL**	5/8" flange (sheetrock)	**H**	High Output	**35**	3500K			**277**			**n80**	N80 nLight with 80% Lumen mgt		
								40	4000K			**347**[2]			**n80EMG**	N80 nLight with 80% Lumen mgt for use with generator supply EM power		
															n100EMG	N100 nLight with out Lumen mgt for use with generator supply EM power		
															NX	Dimming, No nLight		
															ECO	Lutron Ecosystem Interface module		

Notes
1 Provide field dimensions when placing order. For patterns, clearly indicate inside or outside corners. Runs and patterns are made to size and are not field adjustable. Upon request, factory will prepare installation drawings for approval.
2 Consult Factory

Quickship Program also available.

Conformed Set - May 29, 2015
© Acuity Brands Lighting, Inc. All rights reserved. We reserve the right to change design, materials and finish in any way that will not alter installed appearance or reduce function and performance.

TYPE L5

TYPE L5, L5A

This document, the designs and information presented here Architectural Lighting and is presented for the sole use of conveying product data to our customer. The use, reproduction or divulging of its contents without the consent or knowledge of Mark Architectural Lighting is prohibited.

Rev.	Description	Date	By

FIXTURE MUST BE INSTALLED PRIOR TO CEILING

TYPICAL CORNER DETAIL

REFERENCE FIXTURE INSTALLATION FOR JOINING DETAILS

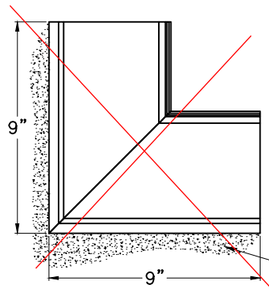

TYP. INSIDE CORNER DIMENSIONS

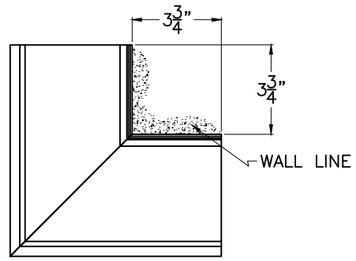

TYP. OUTSIDE CORNER DIMENSIONS

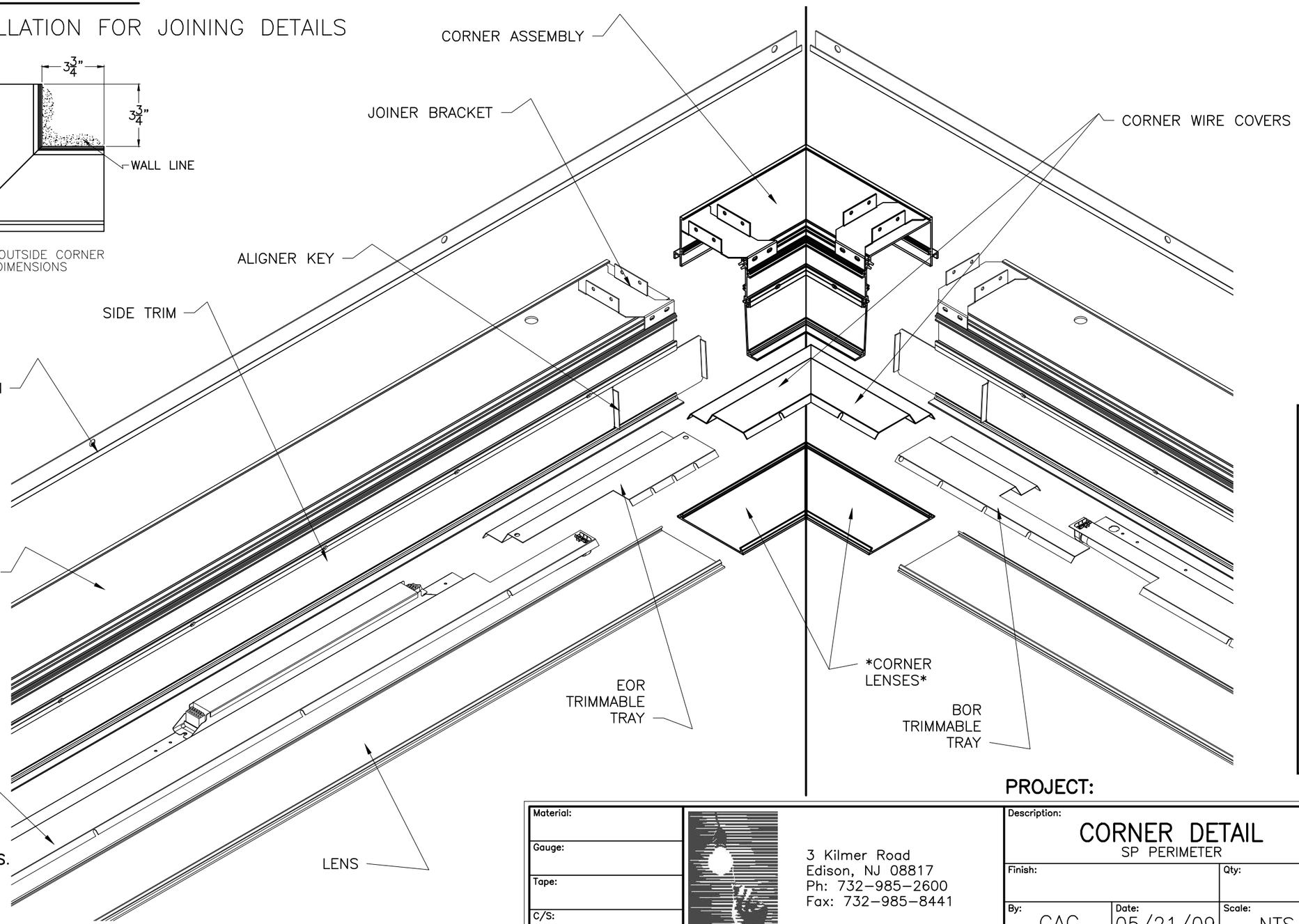

*CORNER LENSES ARE SHIPPED AS SETS FOR THEIR RESPECTIVE HOUSINGS.
DO NOT MIX CORNER LENSES AND HOUSINGS.
LIGHT LEAK GAP MAY RESULT.*

TYPE L5

PROJECT:

Material:	3 Kilmer Road Edison, NJ 08817 Ph: 732-985-2600 Fax: 732-985-8441	Description: CORNER DETAIL SP PERIMETER	
Gauge:		Finish:	Qty:
Tape:		By: CAC	Date: 05/21/09 / Scale: NTS
C/S:			
Qty./Sht.:	mark architectural lighting	Dwg. no.: 09-621	Size: B / Rev.

Conformed Set - May 29, 2015

BeveLED® 2.0 MAX OUTPUT

TYPE L6

PROJECT INFORMATION

PROJECT _____

_____

DATE _____

TYPE _____

1" Regress

BeveLED 2.0 Max Output Recessed Adjustable- It's a Downlight, Adjustable and Wall Wash - all in one housing - interchangeable anytime. The BeveLED 2.0 Max Output adjustable delivers over 2,500 lumens through the smallest possible aperture.

DELIVERED PERFORMANCE

BeveLED 2.0 MAX OUTPUT ADJUSTABLE	36 Watts	
Color Rendering Index	80+ CRI	90+ HIGH CRI
Lumens per Watt	70	53
Source Lumens	3875	2925
Delivered Lumens	**2525**	**1900**
Center Beam Candle Power	6575	4975
Color Consistency	2-Step MacAdam Ellipse	

Performance based on 3000K

1" Regress

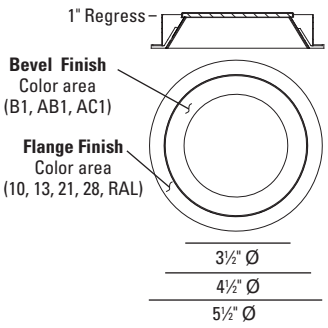

CCT MULTIPLIER	2700K		3000K		3500K	4000K
Color Rendering Index	80+ CRI	90+ HIGH CRI	80+ CRI	90+ HIGH CRI	80+ CRI	80+ CRI
R9 Value	20	60	20	60	20	20
Multiplier for Lumen Output	0.94	0.71	1.00	0.76	1.00	1.00

ACCESSORY MULTIPLIER	BEAM DISTRIBUTION	LENS SIZE	MULTIPLIER FOR LUMEN OUTPUT
LMD35F	35° Beam	F	0.90
LMD40F	40° Beam	F	0.90
LMD45F	45° Beam	F	0.85
LMD55F	55° Beam	F	0.80
LMD60F	60° Beam	F	0.80
LMD6010F	10° x 60° Beam	F	0.85

HOW TO SPECIFY

Ordering Example: Specify trim code and housing code to order: Example : **3231MXA30W - B1 - F - 10 - LRTA4 - 8436 - X2 - 27KS - 30 - NC - 277V - DIML2 - CB27**

TRIM ORDERING INFORMATION

TRIM	OPTION	BEVEL STYLE	LENS [2]	FLANGE FINISH
3231MXA30	_____	_____	_____	_____

3231MXA30 Max Output Round 30° Adjustable	**W** Wet location [1] **EML** Emergency **EMLW** Emergency and Wet Location[1] [1] Wet location, use with B1 trims only.	**B1** 1" Regress Bevel, Die Cast **AB1** 1" Regress Bevel, Black **AC1** 1" Regress Bevel, Clear Matte	**F** Frosted [2] Solite lens provided standard	**10** White **13** Statuary Bronze **21** Black **28** Metalized Grey **RAL** Custom Color (specify RAL #)

HOUSING ORDERING INFORMATION

HOUSING CODE	WATTAGE	ENGINE CODE	COLOR	REFLECTOR*	HOUSING TYPE	VOLTAGE	OPTIONAL DIMMING DRIVER	ACCESSORIES
LRTA4	8436	X2	_____	_____	_____	_____	_____	_____

LRTA4	**8436** 36W LED, 2525 lumens	**X2**	**27KS** 2700K, 80+ CRI **30KS** 3000K, 80+ CRI **35KS** 3500K, 80+ CRI **40KS** 4000K, 80+ CRI 2 Step MacAdam ellipse is standard for all	**30** 30° beam * Note: For other beam options, see "Accessories"	**NC** New Construction **CP** Chicago Plenum [3] [3] Not available with EM	**120V** **277V**	**DIML2** 0-10V dim, 15% **DIML3** Lutron Hi-Lume 1% 2-wire, 120V only **DIML4** Lutron Hi-Lume 1% 3-wire/ECO **DIML6A** ELDO 0-10V 0.1%, logarithmic **DIML6B** ELDO 0-10V 0.1%, linear **DIML7** ELDO DALI 0.1% **DIML8** ELDO DMX 0.1% [4] [4] Not for use with EM	**CB27** 27" C-Channel Bars **CB52** 52" C-Channel Bars **EML** Emergency battery [5] **EMLW** Emergency battery, [5] wet location **LMD35F** 35° beam **LMD40F** 40° beam **LMD45F** 45° beam **LMD55F** 55° beam **LMD60F** 60° beam **LMD6010F** 10° x 60° beam [5] Not for use with CP housings

USAI®

www.usailighting.com
info@usailighting.com

1126 River Road
New Windsor, NY 12553

T 845–565–8500
F 845–561–1130

Conformed Set - May 29, 2015

©2014. USAI, LLC.
All rights reserved.
All designs protected by copyright.

BeveLED® 2.0 MAX OUTPUT

TYPE L6

TRIM INFORMATION

1" Regress

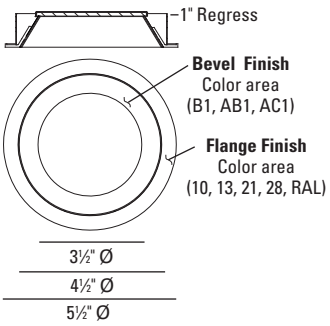

HOUSING INFORMATION

New Construction Universal Style Housing - NC

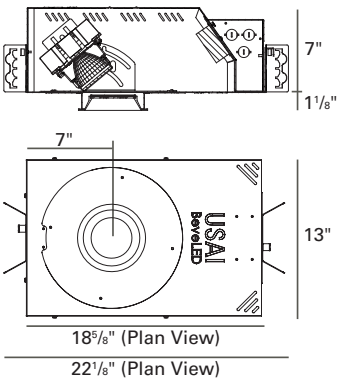

Chicago Plenum - CP

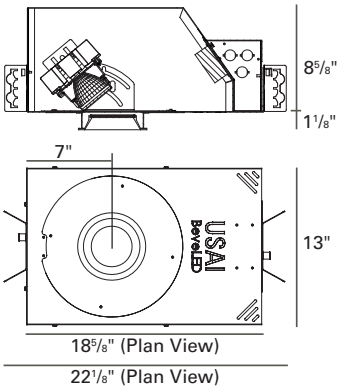

New Construction w/ Emergency - EM

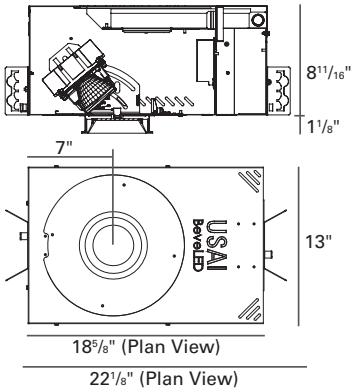

SPECIFICATIONS

TRIM: 4-1/2" round aperture with a 1" regressed bevel and 1/2" flange, retained by two mounting clips. Die cast aluminum bevel is self-flanged and is available in white, statuary bronze, black, and metalized grey finishes. Also available in black or clear matte bevel, with painted flange. Custom color flanges available (provide RAL#).

TRIM LENS: 30° trim is shipped with integral solite lens. Frosted lens available as an option.

REFLECTOR: Interchangeable precision injection molded specular polycarbonate reflector optimized for 30° beam distribution.

ADJUSTMENT: True hot aiming with center beam optics is adjustable, with a completely tool-less mechanism. 0°-40° lockable vertical tilt with 362° lockable rotation.

FIELD REPLACEABLE LIGHT ENGINE: Available with a 2525 lumen, 36W light engine. Engine is field replaceable through the aperture without tools.

COLOR: BeveLED is available in 4 color temperatures (2700K, 3000K, 3500K, 4000K). All color options are tightly binned for fixture-to-fixture color consistency within a 2-Step MacAdam Ellipse. 80+ color rendering index provided standard.

RATED LIFE: Based on IESNA LM80-2008 50,000 hours at 70% lumen maintenance (L70).

THERMAL MANAGEMENT: Proprietary high performance aluminum die cast heatsink for maximum LED life. Ambient temperatures at fixture location should not exceed 40°C during normal operation.

FIELD REPLACEABLE DRIVER: Solid state electronic constant current driver with a high power factor provided standard. Specify 120V or 277V. Driver complies with IEEE C62.41 surge protection.

DIMMING OPTIONS: Multiple dimming drivers available. See compatibility chart attached. Note: DIML6A logarithmic control is intended for use with Lutron control systems; DIML6B linear control is intended for use with non-Lutron controls.

EMERGENCY: Emergency lighting battery pack with remote test switch is serviceable through aperture for NC housings. Bodine BSL17C provides 190mA for 90 minutes; delivers ~500 lumens. EMLW wet location option is available with B1 trim only and requires remote test switch. EM options not available with DIML8 DMX dimming driver or CP housings.

MOUNTING: Butterfly brackets and adjustable nailer bars with integral nails provided. Nailer bars are extendible from 14" to 24" centers.

HOUSING: Fabricated of 20 ga. galvanized steel with thru wire J-box, 4 in 4 out at min. 90°C, #12 AWG thru branch circuit wiring.

MAXIMUM CEILING THICKNESS: As per drawings above.

ACCESSORY HOLDER: Snap in accessory holder shipped with fixture. 30° accepts "F" size lens, maximum 2.

CEILING CUT OUT: 5-1/16"Ø

LISTINGS: Dry/Damp. Wet location option available with B1 trim only. NRTL/CSA-US tested to UL standards. IBEW union made.

WARRANTY: 5 years

NOTES:

- Not for use in corrosive environment.
- Use of pressure washer voids warranty.

PHOTOMETRICS: Consult factory or website for IES files. Tested in accordance with IESNA LM79-2008.

USAI®

www.usailighting.com
info@usailighting.com

1126 River Road
New Windsor, NY 12553

T 845–565–8500
F 845–561–1130

Conformed Set - May 29, 2015

©2014. USAI, LLC.
All rights reserved.
All designs protected by copyright.

BeveLED 2.0 MAX OUTPUT

TYPE L6

DIMMING DRIVER COMPATIBILITY SELECTION GUIDE DIML2 & DIML3

DIMMING DRIVER WIRING SCHEMES:

DIML2 LED: 0-10V FL Dimming Driver Wiring (Dims down to 15%)

NOTE: Consult dimmer manufacturer for detailed installation information.

For use with 0-10V fluorescent type controls.

Use only with approved vendor models in table below

Crestron Dimmer Intensity

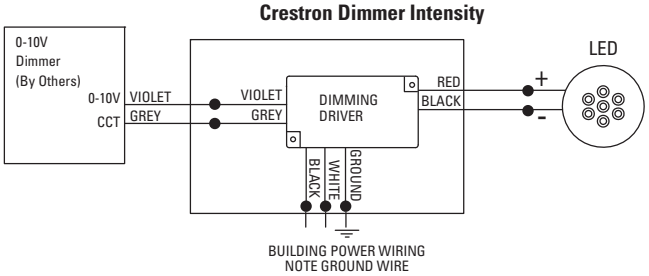

Leviton and Lightolier Dimmer Wiring

Leviton: IP710-DLX

Lightolier: V2000FAMU

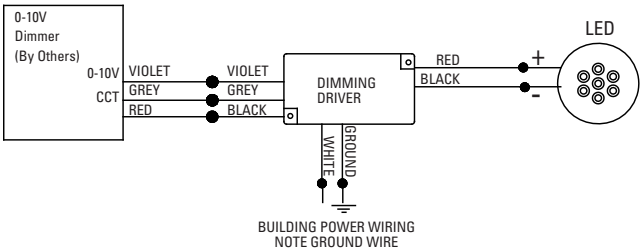

Compatible Dimming System: NOTE:

Consult dimmer manufacturer for detailed installation information.

Manufacturer	Dimmer Model	Fixtures per Dimmer	Min-Max % Limits (2)	Measured Light Output (3)
Crestron	CLS-EXP-DIMFLV	(1)	0-100%	15-100%
Crestron	DIN-4DIMFLV4	(1)	0-100%	15-100%
Crestron	DIN-A08	(1)	0-100%	15-100%
Crestron	GLX-DIMFLV8	(1)	0-100%	15-100%
Crestron	GLXP-DIMFLV8	(1)	0-100%	15-100%
Leviton	IP710-DLX	(1)	0-100%	15-100%
Lightolier	V2000FAMV	(1)	0-100%	15-100%
Lutron	DIVA DVTV-XX	(1)	0-100%	15-100%

(1) Refer to manufacturer's load rating for maximum and minimum load.
(2) % Level refers to the Control System Intensity.
Operating the dimmer below the Min % level may cause flicker.
Operating the dimmer above the Max % may show no additional brightness.
(3) % Level of light output from fixture when connected directly to power source

DIML3 LED: Lutron Hi-Lume A-Series 2 Wire Fwd Phase (with neutral) / LED Dimming Driver Wiring (Dims down to 1%) 120V only.

Compatible Lutron Dimmers / Test Results

NOTE: Consult dimmer manufacturer for detailed installation information.

Product	Part Number	Fixtures Per Dimmer 120V Only*	Measured Light Output Range
NovaT	NTLV-600-CPN0199	1 – 8	100% - 1%
Maestro Wireless	MRF2-6ND-120	1 – 8	100% - 1%
RadioRA 2 1000W	RRD-10ND	1 – 13	100% - 1%
RadioRA 2 Adaptive dimmer	RRD-6NA	1 – 8	100% - 1%
RadioRA 600W	RA-6ND	1 – 8	100% - 1%
RadioRA 1000W	RA-10ND	1 – 13	100% - 1%
HomeWorks QS 600W	HQRD-6ND	1 – 8	100% - 1%
HomeWorks QS 1000W	HQRD-10ND	1 – 13	100% - 1%
HomeWorks QS Adaptive dimmer	HQRD-6NA	1 – 8	100% - 1%
HomeWorks QS WPM	HQRJ-WPM-6D-120	1 – 11 (per output)	100% - 1%
HomeWorks 600W dimmer	HRD-6ND	1 – 8	100% - 1%
HomeWorks 1000W dimmer	HWD-10ND, HRD-10ND	1 – 8	100% - 1%
HomeWorks WPM	HWI-WPM-6D-120	1 – 10 (per output)	100% - 1%
GRAFIK Eye QS	QSGR-, QSGRJ-	1 – 10 (per output)	100% - 1%
GRAFIK Eye 3000	GRX-3100, GRX-3500	1 – 10 (per output)	100% - 1%
RPM-4U Module (LCP, HomeWorks, GRAFIK Systems, Quantum)	HW-RPM-4U-120, LP-RPM-4U-120	1 – 26 (per output)	100% - 1%
RPM-4A Module (LCP, HomeWorks, GRAFIK Systems, Quantum)	HW-RPM-4A-120, LP-RPM-4A-120	1 – 8 (per output)	100% - 1%
GP Panels (LCP, HomeWorks, GRAFIK Systems, Quantum)	Various	1 – 27	100% - 1%
Stanza	SZ-6ND	1 – 8	100% - 1%

* Fixtures per Dimmer value assumes a 40W fixture. Number of fixtures may be higher if wattage is less than 40W.

NOTE: Contact Lutron tech support for deganging rules when using wallbox controls on the Hi-lume A-Series LED Driver.

Compatible ETC Dimming Cabinets / Test Results

Approved for use with:

ETC Sensor + Cabinet with D20 dimming module

Measured light output 100% - 1%

ETC Unison DRd Cabinet with D20 dimming module

NOTE: Additional dim configuration required for optimum performance.

Measured light output 100% - 1%

Wire Diagram for 2-Wire Control

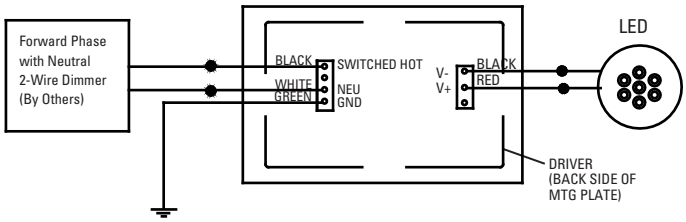

USAI®

www.usailighting.com
info@usailighting.com

1126 River Road
New Windsor, NY 12553

T 845–565–8500
F 845–561–1130

Conformed Set - May 29, 2015

©2014. USAI, LLC.
All rights reserved.
All designs protected by copyright.

TYPE L6

BeveLED 2.0 MAX OUTPUT
DIMMING DRIVER WIRING SCHEMES:

DIMMING DRIVER COMPATIBILITY SELECTION GUIDE
DIML4, DIML6A & DIML6B

DIML4 LED: Lutron Hi-Lume A-Series LED Driver with Eco System Control / LED Dimming Driver Wiring (Dims down to 1%)

Compatible Lutron Dimmers / Test Results

NOTE: Consult dimmer manufacturer for detailed installation information.

Product	Part Number	Fixtures Per Dimmer 120V	Fixtures Per Dimmer 277V	Measured Light Output Range
NovaT	NTF-10,	1-59	-	100% - 1%
NovaT	NTF-103P, NTF-10-277	1-29	1-61	100% - 1%
NovaT	NTF-103P-277	-	1-46	100% - 1%
Nova	NF-10	1-59	-	100% - 1%
Nova	NF-103P, NF-10-277	1-29	1-61	100% - 1%
Nova	NF-103P-277	-	1-46	100% - 1%
Vareo	VF-10	1-29	-	100% - 1%
Skylark	SF-10P, SF-103P	1-29	-	100% - 1%
Skylark	SF-12P-277,SF-12P-277-3	-	1-46	100% - 1%
Diva	DVF-103, DVSCF-103P	1-29	-	100% - 1%
Diva	DVF-103P-277,DVSCF-103P-277	-	1-46	100% - 1%
Ariadni	AYF-103P	1-29	-	100% - 1%
Ariadni	AYF-103P-277	-	1-46	100% - 1%
Vierti	VTF-6AM	1-22	-	100% - 1%
Maestro	MAF-6AM, MAF-6AM-277, MSCF-6AM, MCSF-6AM-277	1-22	1-46	100% - 1%
Maestro Wireless	MRF2-F6AN-DV	1-22	1-46	100% - 1%
Spacer System	SPSF-6A,SPSF-6A-277, SPSF-6AM, SPSF-6AM-277	1-22	1-46	100% - 1%
Lyneo LX	LXF-103PL	1-29	-	100% - 1%
Lyneo LX	LXF-103PL-277	-	1-46	100% - 1%
Radio RA 2	RRD-F6AN-DV	1-22	1-46	100% - 1%
HomeWorks QS	HQRD-F6AN-DV	1-22	1-46	100% – 1%
Interfaces (1)	PHPM-3F -120, PHPM-3F-DV	1-59	1-123	100% - 1%
	NGRX-FDBI-16A	1-59	-	100% - 1%
Energi Savr Node with EcoSystem	CS-1L-WM, CS-2L-WM, CS-1LCM, CS-2L-CM	64 per EcoSystem		100% - 1%
Grafik Eye QS with ECO System	QS with EcoSystem			100% - 1%
				100% - 1%
Quantum	Quantum			100% - 1%
PowerPak dim module ECOSystem	RMJ-ECO32-DV-B	32 per module		100% - 1%
				100% - 1%

(1) For use with 3 Wire controls or Commercial Systems, RA Systems or Home Systems applications.
*Contact Lutron tech support for deganging rules when using wallbox controls on the Hi-lume A-Series LED Driver.
**Fixtures per Dimmer value assumes a 40W fixture. Number of fixtures may be higher if wattage is less than 40W.

Compatible ETC Dimming Cabinets / Test Results

Approved for use with:
ETC Sensor+ Cabinet with D20F dimming module
Measured light output 100% - 1%

ETC Unison DRd Cabinet with D20F dimming module
NOTE: Additional dim configuration required for optimum performance.
Measured light output 100% - 1%

Wire Diagram for 3-Wire FL Control (no Eco System Control)

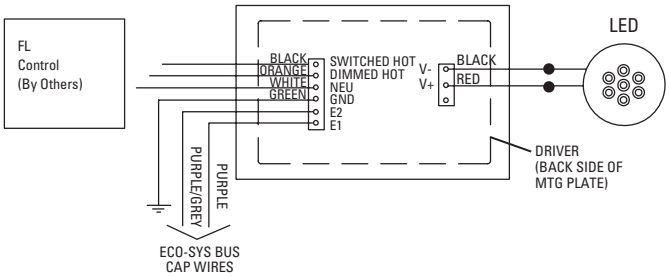

Wire Diagram for ECO System Digital Control

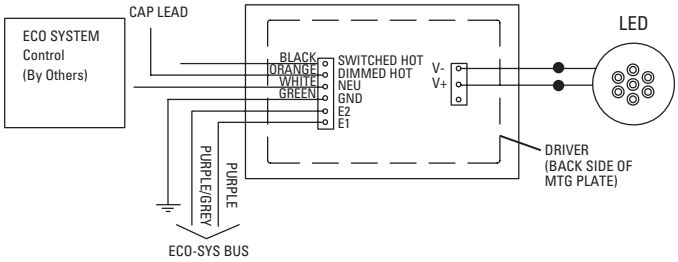

DIML6A LED: eldoLED SOLOdrive 561/S 0-10V control 100%-0% dimming driver For Lutron Controls (dims down to 0.1%).

Product	Part Number	Fixtures Per Dimmer	Dimming Range
Diva	DVTV/NFTV/N TFTV with PP-20	(1)	0.1% - 99%
Energi Savr Node	QSN-4T16-S	(1)	0.1% - 100%
Panels	TVM2 Module	(1)	0.1% - 99%
Interfaces	GRX-TVI w GRX3503	(1)	0.1% - 100%

(1) Refer to manufacturer's load rating for maximum and minimum load.

Test Comment:

Some delay may be experienced at low light levels or wattages when the load is turned off

DIML6B LED: eldoLED SOLOdrive 561/S 0-10V control 100%-0% dimming driver For Non-Lutron Controls (dims down to 0.1%).

Product	Part Number	Fixtures Per Dimmer	Measured Dimming Range
Bush-Jaeger	2112U-101	(1)	0.1% - 100%
Jung	240-10	(1)	0.1% - 100%
Leviton Lighting			0.1% - 100%
Controls	IllumaTech-IP710-DLX	(1)	0.1% - 100%
Lightolier Controls	ZP600FAM120	(1)	0.1% - 100%
Merten	5729	(1)	0.1% - 100%
Pass & Seymour	CD4FB -W	(1)	0.1% - 100%
The Wall Stopper	DCLV1	(1)	0.1% - 100%

(1) Refer to manufacturer's load rating for maximum and minimum load.

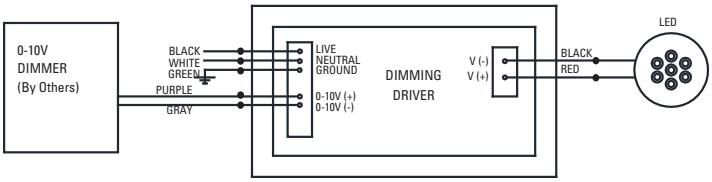

©2014. USAI, LLC.
All rights reserved.
All designs protected by copyright.

Conformed Set - May 29, 2015

BeveLED® 2.0 MAX OUTPUT
DIMMING DRIVER WIRING SCHEMES:

DIMMING DRIVER COMPATIBILITY SELECTION GUIDE
DIML7, DIML8, DIML9, DIML10

DIML7 LED: eldoLED DALI Dimming Driver Wiring (Dims down to 0.1%)

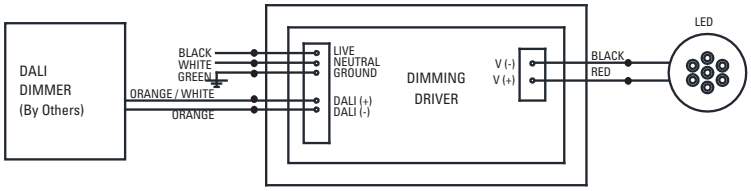

DIML8 LED: eldoLED DMX Dimming Driver Wiring (Dims down to 0.1%)

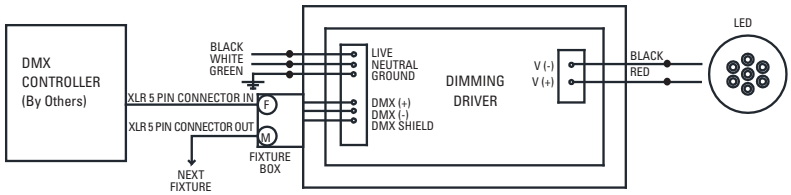

DIML9 LED: TRIAC Dimming Driver Wiring (Dims down to 15%)

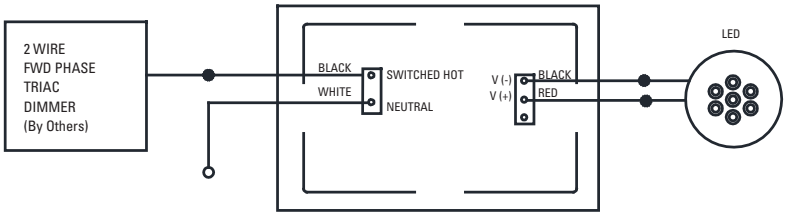

DIML10 LED: ELV Dimming Driver Wiring (Dims down to 15%)

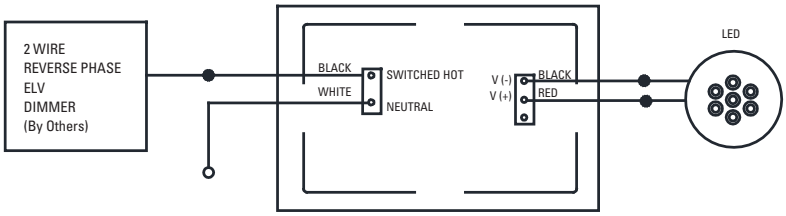

©2014. USAI, LLC.
All rights reserved.
All designs protected by copyright.

VarioLED™ Flex HYDRA LD15

NEW

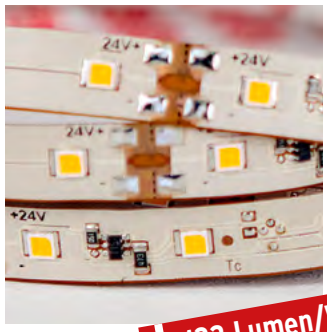

! 132 Lumen/Watt

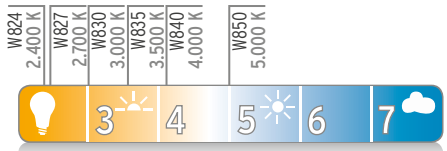

15,36 Watt/meter

2.034 lumen/meter (lm/m)

! One Bin Only: 3 MacAdam

Ra/CRI 85

Aufbau & Maße Assembly & measurement

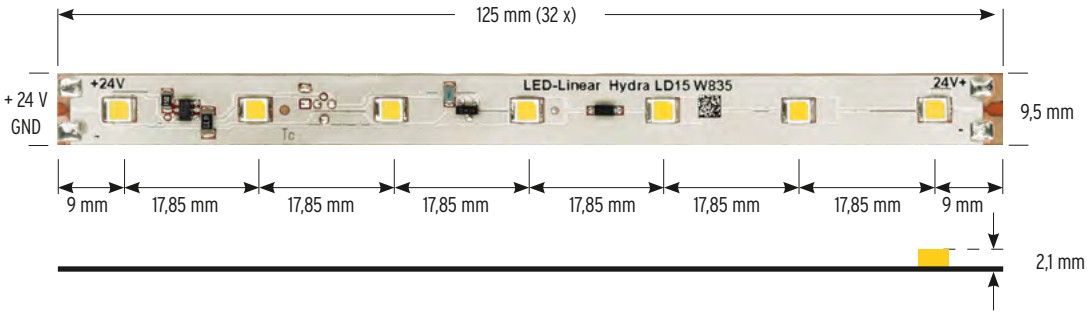

Elektrische & Optische Betriebsdaten Electrical & optical data

Abmessungen Dimensions	4.000 mm x 9,5 mm x 2,1 mm
Teilungsmaß Step length	125 mm/7 LED
Leistung Power	61,4 W/15,36 Watt/meter
Effizienz Efficacy	bis zu/up to 132 lumen/Watt
Anzahl LED Number LED	224 LED, 17,85 mm LED pitch
Spannung Voltage (V)	24 Volt (23 V_{min}, 25 V_{max})
Strom Current	2,56 A/80 mA per step
Temperatur Temperature	tc_{min} = -25°C, tc_{max} = +80°C
Lagertemp. Storage temp.	t_{min} = -30°C, t_{max} = +85°C
Außentemperatur Ambient temp.	ta_{min} = -25°C, ta_{max} = +45°C

VarioLED™ Flex HYDRA LD15	Art. #	Lumen/meter (lm/m)	Ra CRI	R9 CRI	Farbtemperatur Color Temperature (K)
W824	10376	1.230	85	30	2.400
W827	10325	1.683	85	20	2.700
W830	10324	1.797	85	20	3.000
W835	10323	1.892	85	20	3.500
W840	10322	1.937	83	20	4.000
W850	10321	2.034	83	10	5.000

Tj Away®
LED LINEAR™ TECHNOLOGY

Keine zusätzliche Kühlung über AL-Profil notwendig.

No need for additional heat sinking on AL profile.

ONE BIN ONLY

L80, >37.000 hrs — Lebensdauer Lifetime

LM 79 — LM 79 konform LM 79 compliant

LM 80 — LM 80 konform LM 80 compliant

Nähere Erläuterungen zu Änderungen, Grenzwerten und Schwankungen im Herstellungsprozess finden Sie im LED Linear™ Systemkatalog, Seite 532.

For more details regarding catalogue changes, min and max data sheet values and production tolerances see the LED Linear™ system catalogue, page 533.

Sicherheits- und Montagehinweise: LED Linear™ Systemkatalog, Seite 534 ff. Safety and assembly information: LED Linear™ system catalogue, page 536 ff.

Conformed Set - May 29, 2015

Ausschreibungstext Specification text

VarioLED™ Flex HYDRA LD15
24 V, flexibles LED Modulband (Stepmaß = 125 mm/ 4,91") mit reflektierender, weißer Oberfläche und selbstklebenden 3M Klebeband auf der Rückseite. Japanische LED höchster Qualität. Mit 2.034 lm/m bei 15,36 W/m ergibt sich eine Effizienz von 132 lm/W. 120° Abstrahlwinkel. Sehr gute Farbwiedergabe mit RA 85. „One Bin Only" garantiert konstante Farbtemperatur und höchste Lichtqualität bei einer Lebensdauer von >37.000 h (L80). Einlagiges, flexibles Leiterplattenmaterial (FPC) mit LED Linear Tj Away® Technology für ein optimales Wärmemanagement. Konstanter Lichtstrom und verlängerte Lebensdauer durch auf der Leiterplatte integrierte Konstantstromquelle. Geschützt gegen elektrostatische Entladung +/- 2.000 V. Made in Germany.

VarioLED™ Flex HYDRA LD15
24V, flexible LED strip (step measurement = 125mm/4.91") with reflective, white surface and 3M adhesive tape on the back. Japanese LEDs of the highest quality. 2,034 lm/m at 15.36 W/m result in an efficiency of 132 lm/W. 120° beam angle. Very good color reproduction with CRI 85. "One Bin Only" within 3 MacAdam guarantees constant color temperature and high light quality at a lifetime of >37,000 hours (L80). Single-layer, flexible circuit board material (FPC) with LED Linear Tj Away® Technology for optimal heat management. Constant light output and extended lifetime thanks to an integrated constant current source on the circuit board. Protected against electrostatic discharge +/- 2,000 V. Made in Germany.

VarioLED™ Flex HYDRA LD15

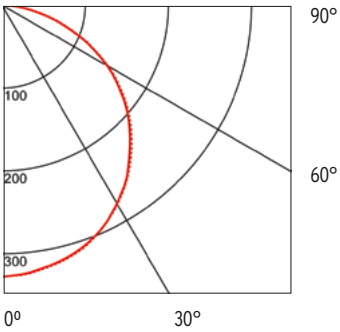

cd/1.000 lumen —— C0/C180 ····· C90/C270

Binning

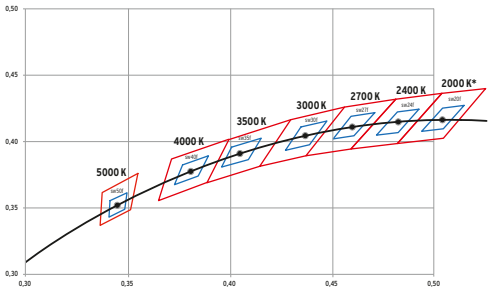

* 2.000 K under preparation

Jetzt und in Zukunft

ONE BIN ONLY

Today and tomorrow

Zubehör Accessories

erforderlich required

Konverter
Power supply unit
Seite 519 ff page 519 ff

Kabel 2-adrig
Cable mono
Seite 460 ff page 460 ff

optional optional

Steuer-protokoll
Power control system
Seite 506 ff page 506 ff

Optiken/Abdeckungen Optics / Cover

VarioContour	002	003	004	005	006	007/X00LUM	4262/X00LIGHT	···
B x H mm (ohne Optiken) W x H mm (without optics)	19,5 x 15	18 x 9	19,5 x 19,5	19,5 x 12 ,5	16 x 18	25,4 x 31	42 x 62	
Linearlinse 10° Linear lense 10°	×	×		×	×	×	×	
Linearlinse 30° Linear optic 30°	×			×		×	×	
Linearlinse 60° Linear optic 60°	×			×		×	×	
Linearlinse 90° Linear optic 90°	×		×	×		×	×	
Runde Abdeckung Round cover						×	×	
Flache Abdeckung Low square/L² cover		×			×			
Hohe Abdeckung High scquare/H² cover		×			×		×	

Details siehe Seite 474 ff. Details on page 474 ff.

Sicherheits- und Montagehinweise: LED Linear™ Systemkatalog, Seite 534 ff. Safety and assembly information: LED Linear™ system catalogue, page 536 ff.

Conformed Set - May 29, 2015

VarioContour 004

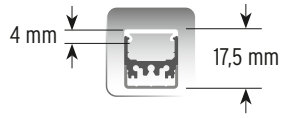

NEW

15,5 mm x 19,5 mm

Bezeichnung Description	VarioContour 004 Base Profile
Artikelnummer Art.-No.	10000301
Einheit Unit	meter (m)
Min. VPE Min. OQ	30

AL Profil mit Haltenut für Abdeckungen (L x H x B) 2.000 mm x 15,5 mm x 19,5 mm
Aluminum profile with groove for various covers (L x H x W) 2,000 mm x 15.5 mm x 19.5 mm

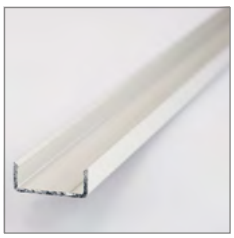

8 mm x 19,5 mm

Bezeichnung Description	VarioContour 002/004/005 Mounting Profile
Artikelnummer Art.-No.	10000039
Einheit Unit	meter (m)
Min. VPE Min. OQ	30

AL Montageprofil für VarioContour 002/004/005 (L x H x B) 2.000 mm x 8 mm x 19,5 mm
Aluminum mounting profile for VarioContour 002/004/005 (L x H x W) 2,000 mm x 8 mm x 19.5 mm

9 mm x 19,5 mm

Bezeichnung Description	VarioCover 002/004/005 Opal R
Artikelnummer Art.-No.	12000011
Einheit Unit	meter (m)
Min. VPE Min. OQ	30

Runde, opale Abdeckung für VarioContour 002/004/005 (L x H x B) 2.000 mm x 9 mm x 19,5 mm
Round opal cover for VarioContour 002/004/005 (L x H x W) 2,000 mm x 9 mm x 19.5 mm

9 mm x 19,5 mm

Bezeichnung Description	VarioCover 002/004/005 Opal H[2]
Artikelnummer Art.-No.	12000012
Einheit Unit	meter (m)
Min. VPE Min. OQ	30

Eckige, hohe, opale Abdeckung für VarioContour 002/004/005 (L x H x B) 2.000 mm x 9 mm x 19,5 mm
High square opal cover for VarioContour 002/004/005 (L x H x W) 2,000 mm x 9 mm x 19.5 mm

4 mm x 19,5 mm

Bezeichnung Description	VarioCover 002/004/005 Opal L[2]
Artikelnummer Art.-No.	12000013
Einheit Unit	meter (m)
Min. VPE Min. OQ	30

Eckige, flache, opale Abdeckung für VarioContour 002/004/005 (L x H x B) 2.000 mm x 4 mm x 19,5 mm
Low flat opal cover for VarioContour 002/004/005 (L x H x W) 2,000 mm x 4 mm x 19.5 mm

9 mm x 19,5 mm

Bezeichnung Description	VarioCover 002/004/005 Diffuse R
Artikelnummer Art.-No.	12000014
Einheit Unit	meter (m)
Min. VPE Min. OQ	30

Runde, diffuse Abdeckung für VarioContour 002/004/005 (L x H x B) 2.000 mm x 9 mm x 19,5 mm
Round diffuse cover for VarioContour 002/004/005 (L x H x W) 2,000 mm x 9 mm x 19.5 mm

Conformed Set - May 29, 2015

VarioContour 004

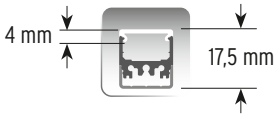

9 mm x 19,5 mm

Bezeichnung Description	VarioCover 002/004/005 Diffuse H²
Artikelnummer Art.-No.	12000015
Einheit Unit	meter (m)
Min. VPE Min. OQ	30

Eckige, hohe, diffuse Abdeckung für VarioContour 002/004/005 (L x H x B) 2.000 mm x 9 mm x 19,5 mm
High square diffuse cover for VarioContour 002/004/005 (L x H x W) 2,000 mm x 9 mm x 19.5 mm

4 mm x 19,5 mm

Bezeichnung Description	VarioCover 002/004/005 Diffuse L²
Artikelnummer Art.-No.	12000016
Einheit Unit	meter (m)
Min. VPE Min. OQ	30

Eckige, flache, diffuse Abdeckung für VarioContour 002/004/005 (L x H x B) 2.000 mm x 4 mm x 19,5 mm
Low flat diffuse cover for VarioContour 002/004/005 (L x H x W) 2,000 mm x 4 mm x 19.5 mm

9 mm x 19,5 mm

Bezeichnung Description	VarioCover 002/004/005 Clear R
Artikelnummer Art.-No.	12000017
Einheit Unit	meter (m)
Min. VPE Min. OQ	30

Runde, klare Abdeckung für VarioContour 002/004/005 (L x H x B) 2.000 mm x 9 mm x 19,5 mm
Round clear cover for VarioContour 002/004/005 (L x H x W) 2,000 mm x 9 mm x 19.5 mm

9 mm x 19,5 mm

Bezeichnung Description	VarioCover 002/004/005 Clear H²
Artikelnummer Art.-No.	12000018
Einheit Unit	meter (m)
Min. VPE Min. OQ	30

Eckige, hohe, klare Abdeckung für VarioContour 002/004/005 (L x H x B) 2.000 mm x 9 mm x 19,5 mm
High square clear cover for VarioContour 002/004/005 (L x H x W) 2,000 mm x 9 mm x 19.5 mm

4 mm x 19,5 mm

Bezeichnung Description	VarioCover 002/004/005 Clear L²
Artikelnummer Art.-No.	12000019
Einheit Unit	meter (m)
Min. VPE Min. OQ	30

Eckige, flache, klare Abdeckung für VarioContour 002/004/005 (L x H x B) 2.000 mm x 4 mm x 19,5 mm
Low flat clear cover for VarioContour 002/004/005 (L x H x W) 2,000 mm x 4 mm x 19.5 mm

NEW

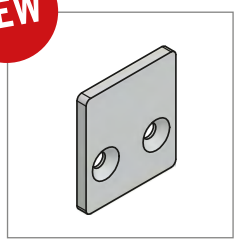

19,5 mm x 21,7 mm x 6 mm

Bezeichnung Description	VarioCap 004 clear L² (Set of 2)
Artikelnummer Art.-No.	11000115
Einheit Unit	Set/set (pu)
Min. VPE Min. OQ	10

Endkappen für VarioContour 004 inkl. Befestigungsschrauben
End Caps for VarioContour 004 incl. fixing screws

Conformed Set - May 29, 2015

VarioContour 004

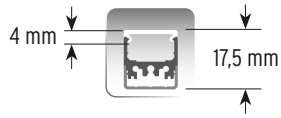

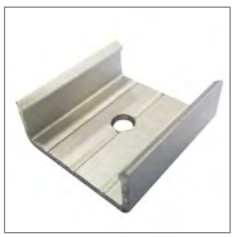

20 mm x 8 mm x 19,5 mm

Bezeichnung Description	VarioClip 002/004/005 20 mm
Artikelnummer Art.-No.	10000040
Einheit Unit	Stück/piece (pc)
Min. VPE Min. OQ	10

AL Halteklammer für VarioContour 002/004/005 (L x H x B) 20 mm x 8 mm x 19,5 mm
Aluminum mounting clip for VarioContour 002/004/005 (L x H x W) 20 mm x 8 mm x 19.5 mm

8 mm x 19,4 mm x 29,7 mm

Bezeichnung Description	VarioClip 002/004/005 Plastic*
Artikelnummer Art.-No.	13000032
Einheit Unit	Stück/piece (pc)
Min. VPE Min. OQ	10

Halteklammer aus Kunststoff für VarioContour 002/004/005 (L x H x B) 8 mm x 19,4 mm x 29,7 mm
Plastic mounting clip for VarioContour 002/004/005 (L x H x W) 8 mm x 19.4 mm x 29.7 mm

NEW

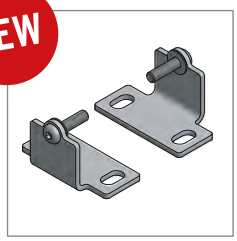

Bezeichnung Description	Adjustable Mounting Bracket 002/004 (Set of 2)
Artikelnummer Art.-No.	13000082
Einheit Unit	Set/set (pu)
Min. VPE Min. OQ	10

Montagebügel (frei justierbar) für VarioContour 002/004
Adjustable mounting bracket for VarioContour 002/004

4 mm x 19,5 mm

NEW

Bezeichnung Description	LinearOptic 004 Diffuse 10°
Artikelnummer Art.-No.	12000042
Einheit Unit	meter (m)
Min. VPE Min. OQ	30

Linearlinse 10° für VarioContour 004 (L x B x H) 2.000 mm x 7,4 mm x 17,8 mm
Linear lense 10° for VarioContour 004 (L x H x W) 2,000 mm x 7.4 mm x 17.8 mm

NEW

Bezeichnung Description	LinearOptic 004 Diffuse 30°
Artikelnummer Art.-No.	12000043
Einheit Unit	meter (m)
Min. VPE Min. OQ	30

Linearlinse 30° für VarioContour 004 (L x H x B) 2.000 mm x 7,4 mm x 17,8 mm
Linear lense 30° for VarioContour 004 (L x H x W) 2,000 mm x 7.4 mm x 17.8 mm

NEW

Bezeichnung Description	LinearOptic 004 Diffuse 60°
Artikelnummer Art.-No.	12000044
Einheit Unit	meter (m)
Min. VPE Min. OQ	30

Linearlinse 60° für VarioContour 004 (L x H x B) 2.000 mm x 7,4 mm x 17,8 mm
Linear lense 60° for VarioContour 004 (L x H x W) 2,000 mm x 7.4 mm x 17.8 mm

NEW

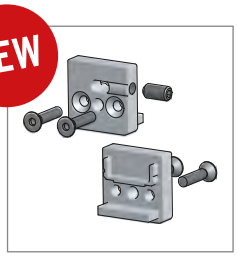

Bezeichnung Description	VarioCap 004 with cable release (Set of 2)
Artikelnummer Art.-No.	11000095
Einheit Unit	Set/set (pu)
Min. VPE Min. OQ	10

Endkappen für VarioContour 004 mit Kabelauslass inkl. Befestigungsschrauben
End Caps for VarioContour 004 with cable release incl. fixing screws

Conformed Set - May 29, 2015

* Keine Verwendung in Verbindung mit Montageprofil * No use in connection with mounting profile

VarioPSU

NEW

Bezeichnung Description	VarioPSU 24V/80W IP20; 100 – 277 V, slim
Artikelnummer Art.-No.	16000123
Einheit Unit	Stück/piece (pc)
Min. VPE Min. OQ	5

IP20, 80 W, 24 V Gleichspannungsversorgung, (L x H x B) 305 mm x 24 mm x 30 mm; Eingangsspannung 100 V – 277 V
IP20, 80 W, 24 V constant voltage power supply, (L x H x W) 305 mm x 24 mm x 30 mm; supply voltage 100 V – 277 V

NEW

Bezeichnung Description	VarioPSU 24V/20W IP20; 110 V, slim
Artikelnummer Art.-No.	16000092
Einheit Unit	Stück/piece (pc)
Min. VPE Min. OQ	5

IP20, 20 W, 24 V Gleichspannungsversorgung, (L x H x B) 153 mm x 21 mm x 30 mm; Eingangsspannung 110 V
IP20, 20 W, 24 V constant voltage power supply, (L x H x W) 153 mm x 21 mm x 30 mm; supply voltage 110 V

NEW

Bezeichnung Description	VarioPSU 24V/28W IP20; 110 V, slim
Artikelnummer Art.-No.	16000093
Einheit Unit	Stück/piece (pc)
Min. VPE Min. OQ	5

IP20, 28 W, 24 V Gleichspannungsversorgung, (L x H x B) 188 mm x 21 mm x 30 mm; Eingangsspannung 110 V
IP20, 28 W, 24 V constant voltage power supply, (L x H x W) 188 mm x 21 mm x 30 mm; supply voltage 110 V

NEW

Bezeichnung Description	VarioPSU 24V/60W IP20; 110 V, slim
Artikelnummer Art.-No.	16000094
Einheit Unit	Stück/piece (pc)
Min. VPE Min. OQ	5

IP20, 60 W, 24 V Gleichspannungsversorgung, (L x H x B) 240 mm x 24 mm x 30 mm; Eingangsspannung 110 V
IP20, 60 W, 24 V constant voltage power supply, (L x H x W) 240 mm x 24 mm x 30 mm; supply voltage 110 V

NEW

Bezeichnung Description	VarioPSU 24V/80W IP20; 110 V, slim
Artikelnummer Art.-No.	16000095
Einheit Unit	Stück/piece (pc)
Min. VPE Min. OQ	5

IP20, 80 W, 24 V Gleichspannungsversorgung, (L x H x B) 305 mm x 24 mm x 30 mm; Eingangsspannung 110 V
IP20, 80 W, 24 V constant voltage power supply, (L x H x W) 305 mm x 24 mm x 30 mm; supply voltage 110 V

Bezeichnung Description	VarioPSU 24V/20W IP20, slim
Artikelnummer Art.-No.	16000081
Einheit Unit	Stück/piece (pc)
Min. VPE Min. OQ	5

IP20, 20 W, 24 V Gleichspannungsversorgung, (L x H x B) 153 mm x 21 mm x 30 mm; Eingangsspannung 220 V
IP20, 20 W, 24 V constant voltage power supply, (L x H x W) 153 mm x 21 mm x 30 mm; supply voltage 220 V

Conformed Set - May 29, 2015

VarioControl IP20

DMX, 0 - 10 V

Bezeichnung Description	VarioControl LinearDrive 180
Artikelnummer Art.-No.	16000057
Einheit Unit	Stück/piece (pc)
Min. VPE Min. OQ	5

388 x 30 x 42 mm, 4 Kanal Steuerung, U_{in}/U_{out} 24 V, I_{out} 4 x 1,5 A oder 3 x 2 A, DMX und 0 - 10 V im IP20 Gehäuse
388 x 30 x 42 mm, 4 channel control, U_{in}/U_{out} 24 V, I_{out} 4 x 1.5 A or 3 x 2 A, DMX and 0 - 10 V in IP20 casing

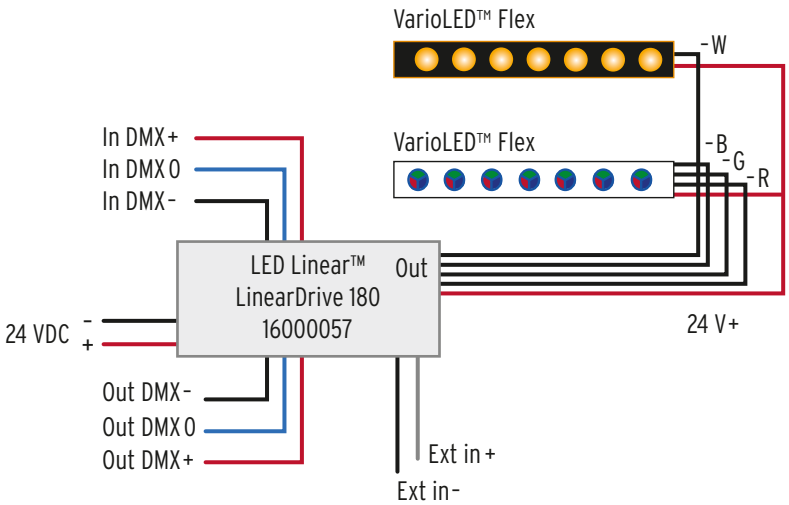

DALI, DMX, 0 - 10 V

Bezeichnung Description	VarioControl LinearDrive 720
Artikelnummer Art.-No.	16000058
Einheit Unit	Stück/piece (pc)
Min. VPE Min. OQ	5

153 x 23 x 50 mm, 4 Kanal Steuerung, U_{in}/U_{out} 24 V, I_{out} 4 x 6 A, DALI, DMX und 0 - 10 V im IP20 Gehäuse
153 x 23 x 50 mm, 4 channel control, U_{in}/U_{out} 24 V, I_{out} 4 x 6 A, DALI, DMX and 0 - 10 V in IP20 casing

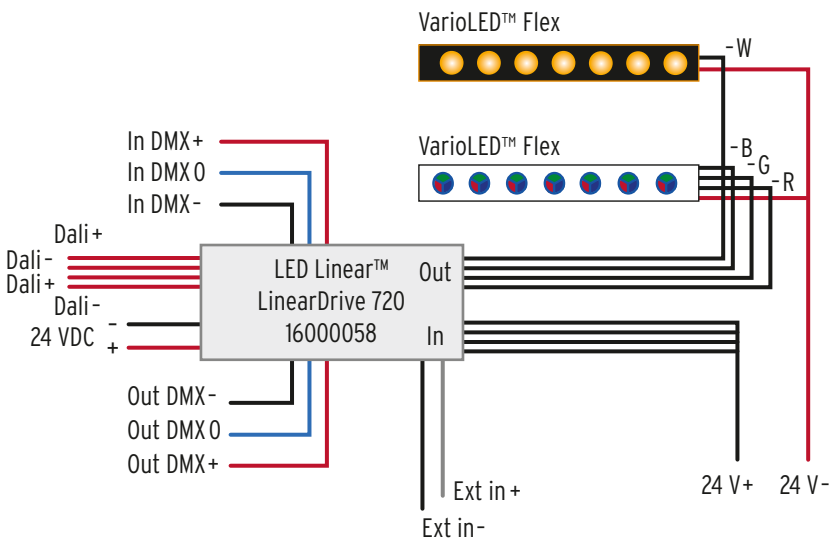

MARK
ARCHITECTURAL
LIGHTING™

TYPE L8, L8A

The **Whisper LED** Series

Gently sloping side panels give Whisper LED its depth and appealing angles. Whether units are installed in rows or individually, the look is artfully clean and simple.

Multiple lens options for the center and side panels allow you to achieve the appropriate design and illumination for each space. Whisper LED is available in 1' x 4', 2' x 2' and 2' x 4' sizes, and it fits perfectly in a variety of business and institutional settings including offices, schools and hospitals.

Project:

Catalog Number:

DO NOT TYPE HERE. Autopopulated field.

Specification Features

Housing
Nominal 1'x4', 2'x2' or 2'x4' housings fabricated from 20-gauge, cold-rolled steel.

Finish
Matte white.

Reflector
Precision-formed steel; white.

Shielding
Shielding frame is constructed of extruded aluminum center and side rails with cold-rolled steel end caps capturing the 3 individual optical panels, forming a single unit. The frame is hinged and can be positioned on either side of the fixture housing to provide easy room side access for maintenance. Shielding options are as follows:
Center Panel: Soft-white acrylic or Micro prismatic conical de-glaring lens.
Side Panels: Soft-white acrylic.

LED Components
Nichia® - 757A-V1 chips (>80CRI)

Driver
AD driver option allows for 0-10V dimming, flicker-free from 2 to 100%. Universal input voltage 120-277VAC, 50/60Hz. HI driver option provides superior 0-10V or Dali dimming from 100% to off, universal voltage 120/277, 50/60Hz.

Color Consistency
The Acuity Brands circuit boards with color a variation of no greater than a 2.5 Step MacAdam (2.5SDCM) along the black body locus from board to board.

Integrated Controls
Standard nLight® embedded controls make luminaire addressable- allowing it to digitally communicate with other nLight enabled controls such as dimmers, switches, occupancy sensors and photocontrols. Simply connect all the nLight enabled control devices using standard CAT5 Cabling.

Lumen Management
An optional lumen management system provides onboard intelligence that actively manages the LED light source so that constant lumen output is maintained over the system's life, creating a consistently illuminated environment while preventing energy waste. (Option: n80)

Mounting
Recessed, lay-in extruded aluminum trim. Accommodates 9/16" slot grid or 15/16" inverted tee, or 9/16" inverted tee.

Certification
CSA Certified to meet U.S. and Canadian standards, rated for Chicago Plenum, and IBEW (Local 3) Union-made in the USA.

Warranty
5-year limited warranty. Complete warranty terms located at www.acuitybrands.com/CustomerResorurces/Terms and conditions.aspx

Notes
1. Specifications subject to change without notice
2. Actual performance may differ as a result of end-user environment and application

Technical Drawings

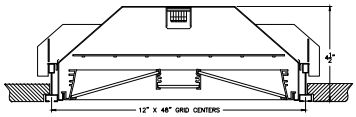

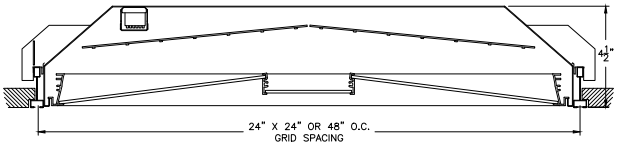

Ordering

Example: WHSL 22 N35AD 120 SWC SWO N80 CP

Series	Size	Linear LED Output	Linear LED Color Temp	Driver	Voltage	Shielding.Center	Shielding.Sides	Integrated Controls	Options
WHSL Whisper LED	**14** 1' x 4' **22** 2' x 2' **24** 2' x 4'	**N** Normal Output **H** High Output	**30** 3000K **35** 3500K **40** 4000K	**AD** Constant Current Driver, 0 -10V 2% Dimming **HI**[1] Constant Current Driver, 0 -10V or Dali 1% Dimming to Off	**120** **277**	**SWC** Soft-white acrylic **YBC** Micro-prismatic conical de-glaring lens	**SWO** Soft-white acrylic	**N100**[1] N100 nLight with outLumen mgt **N80**[1] N80 nLight with 80% Lumen mgt **N80EMG**[1] N80 nLight with 80% Lumen mgt for use with generator supply EM power **N100EMG**[1] N100 nLight with out Lumen mgt for use with generator supply EM power **NX** Dimming, No nLight **ECO** Lutron Ecosystem Interface module **OCS**[2] Integrated occupancy/ photocell	**CP** Chicago Plenum

LUMEN-WATTAGE

SIZE	LED OUTPUT	COLOR TEMP	SHEILDING	SYSTEM WATTS	DELIVERED LUMENS	LM/W DELIVERED
2 x 2	Normal (N)	3500K	SWSW	31	2817	91
2 x 4	Hi (H)	3500K	SWSW	53	4762	89
1 x 4	Normal (N)	3500K	SWSW	31	2642	84
1 x 4	Hi (H)	3500K	SWSW	54	4782	88
2 x 4	Normal (N)	3500K	SWSW	48	4200	87
2 x 4	Hi (H)	3500K	SWSW	81	7792	81

Notes
1. HI driver option not available with N100, N100EMG, N80 or N80EMG control options
2. Occupancy/Photocell will be located at one end of the center sheilding compartment

TM
Quickship Program also available.

©Acuity Brands Lighting, Inc. All Rights Reserved. We reserve the right to change design, materials and finish in any way that will not alter installed appearance or reduce function and performance.

Conformed Set - May 29, 2015

Ceiling Type

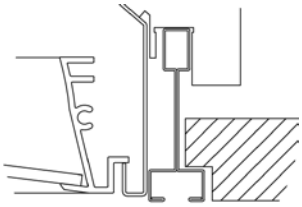

UNIV
(9/16" Slot Grid)

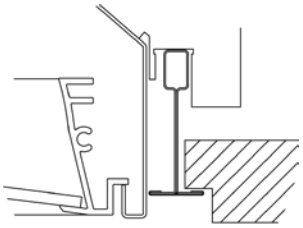

UNIV
(9/16" Grid)

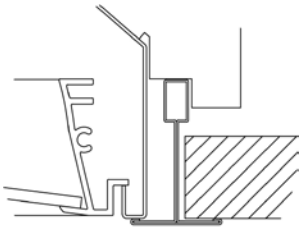

UNIV
(15/16" Grid)

Quickship Program also available.

Conformed Set - May 29, 2015

©Acuity Brands Lighting, Inc. All Rights Reserved. We reserve the right to change design, materials and finish in any way that will not alter installed appearance or reduce function and performance.

AIR LED WALL MOUNT

TYPE L9

axis LIGHTING
[F] 514.948.6271
www.axislighting.com

PROJECT INFORMATION

Project:

Type:

Notes:

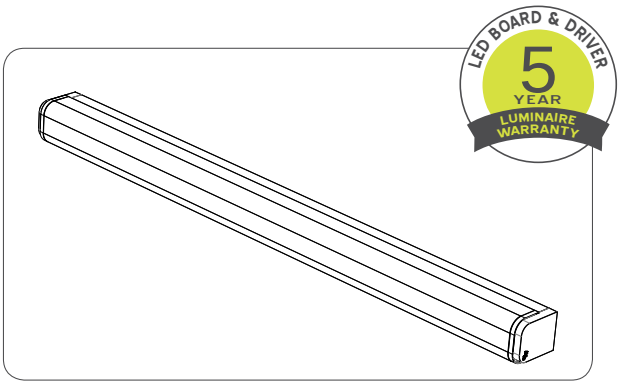

DIMENSIONS -SECTION VIEWS

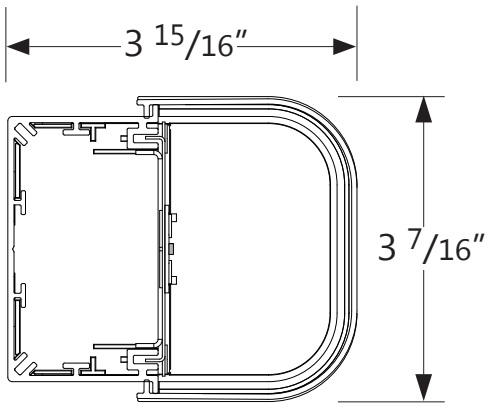

PERFORMANCE PER LINEAR FOOT AT 3500K

NOMINAL LUMEN OUTPUT	INPUT WATTS*	EFFICACY
600 lm/ft	6.4 w/ft	98.3 lm/w

Please consult factory for custom lumen output and wattage.

ORDERING CODE

1	2	3	4	5	6	7	8	9	10	11	12	13	14

PRODUCT SPECIFICATIONS

1	PRODUCT ID	2	VERSION	3	NOM.LUMENS/FT	4	COLOUR TEMP.	5	SHIELDING	6	LENGTH/FT	7	FINISH
ARWLED	air wall led	**B2**	B2 (factory preset)	**500**	500 lm/ft	**35**	3500 k	**S**	satin lens	**3**	3'	**AP**	aluminum paint
+BT	bent tube			**600**	600 lm/ft	**30**	3000 k(1)			**4**	4'	**W**	white
				800	800 lm/ft	**40**	4000 k(1)			**6**	6'	**C**	custom
										8	8'		
										12	12'		
										S#	System Run		
							(1) 8 week lead time for 3000k and 4000k						

8	VOLTAGE	9	DRIVER	10	CIRCUITS	11	BATTERY	12	OTHER	13	IC CONTROLS
120	120V	**D**	dimming(2)	**1**	1 circuit	**B#**	battery pack 4' sections	**F**	fuse	**DS#**	daylight sensor
277	277V	**LT**	lutron	**2**	2 circuits					**OS#**	occupancy sensor
UNV	universal	**RD**	redwood(3)	**+E#**	emergency section						
				+NL#	night light section						
				+GTD#	generator transfer device						
		(2) Standard with LED (3) Please consult factory				Please consult factory				See integrated controls guide for further details	

14	CUSTOM
C	custom
Please specify	

Driver, Battery Pack and Integrated Control Details and Custom Description:

FILE NAME:ARW.LED-B2.SPEC February 5, 2014

Conformed Set - May 29, 2015

Product design and development is an ongoing process at Axis Lighting. We reserve the right to change specifications. Contact Axis for the latest product information.

© 2011 Axis Lighting Inc.

axis LIGHTING
[T] 514.948.6272
[F] 514.948.6271
www.axislighting.com

LIGHT DISTRIBUTION

direct direct/indirect

MOUNTING SPACING

Between Mounting Points:

AIR 4'	(32" C.C.)
AIR 8'	(80" C.C.)
AIR 12'	(128" C.C.)

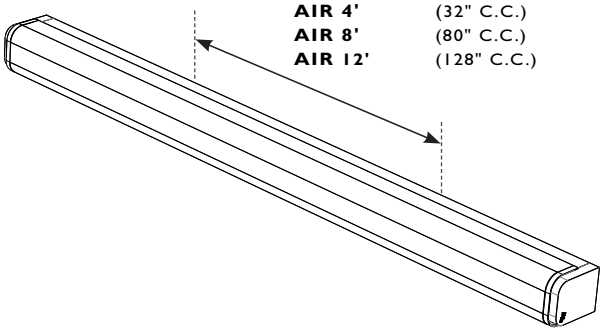

MOUNTING OPTIONS

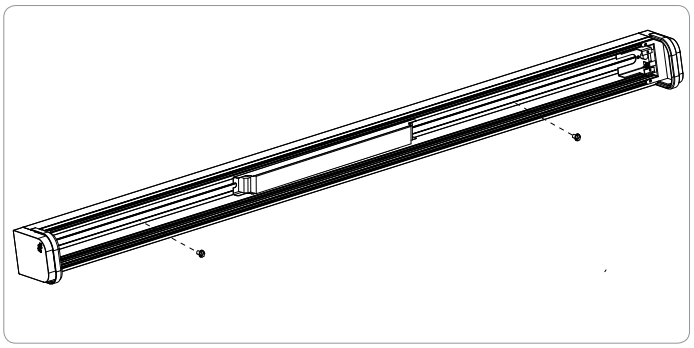

MOUNTING POINT

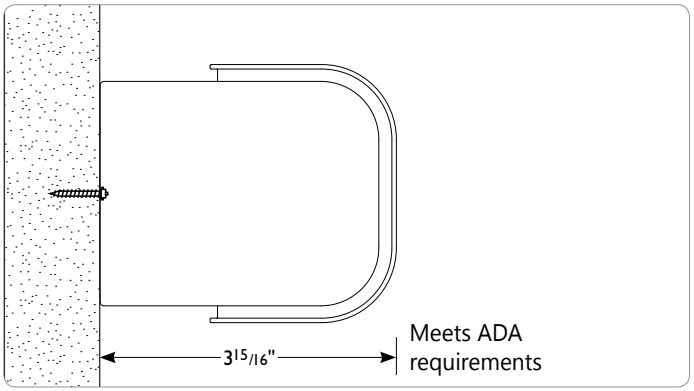

MOUNTING DETAIL

AIR can be mounted vertically or horizontally on the wall

WEIGHT

	WEIGHT
AIR 4 ft	9.5 lbs / 4.3 Kg
AIR 8 ft	19 lbs / 8.6 Kg
AIR 12 ft	28.5 lbs / 12.9 Kg

Installation sheets for all mounting options are available at: www.axislighting.com

OPTICAL SYSTEM

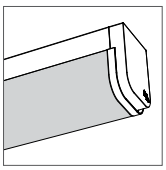

S satin lens

PMMA satin finish (0.060" nominal)

With efficiencies exceeding 80%, Air delivers softly diffused and ample illumination with a Satin lens which provides maximum glare reduction and light uniformity.

SYSTEMS (S#)

Runs of AIR that are greater than 12ft in length are designated as systems (S#). This means that the run is comprised of a combination of sections to be assembled on site using our joining system. For more information on systems and joining, please refer to the AIR installation sheets available for download at www.axislighting.com

OTHER MOUNTING OPTIONS

AIR is also available in pendant and surface mounted options.

Specification sheets for all mounting options are available for download at www.axislighting.com

SPECIFICATIONS

CONSTRUCTION

Housing	Extruded aluminium (0.070" nominal) **Up to 70% recycled content**
End Cap	Die cast zinc (0.080" nominal)
Joiners	Die cast zinc (0.065" nominal)
Interior Brackets	Die formed Sheet Steel (18 gauge)
Reflectors	Die formed Sheet Steel (22 gauge)
Lens joiners	Die cast zinc (0.125" nominal)
Satin lens	Acrylic satin finish (0.060" nominal)

ELECTRICAL

LED	Use of OptimaLED technology based on mid-flux LED
Input Voltage	120V, 277V, UNV.
Driver	Dimming, HiLume, EcoSystem, DALI,
CRI	Minimum 80 color rendering index
CCT	Choice of 3000k, 3500k and 4000k color temperature with a great color consistency (within 3.5–step MacAdam ellipse).
LED life	Minimum 50,000h with 70% of lumen maintenance in 25^{0}C ambient temperature, in compliance with IES LM-80 testing measurements.
Thermal management	Aluminium housing acting as the heat spreader to maximize life.
Emergency	Emergency battery pack or emergency circuit optional.

FINISH

Aluminium paint, Powder Coated and custom finishes are also available.

APPROVALS

Certified to UL and CUL standards
Meets ADA requirements.

FILE NAME:ARW.LED-B2.SPEC February 5, 2014

Conformed Set - May 29, 2015

© 2011 Axis Lighting Inc.

axis LIGHTING
[T] 514.948.6272
[F] 514.948.6271
www.axislighting.com

LIGHT DISTRIBUTION

direct

MOUNTING OPTIONS

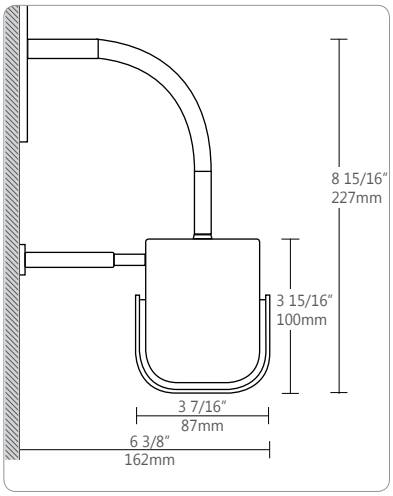

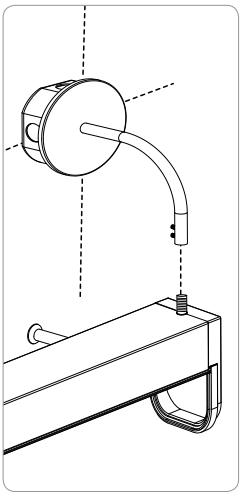

MOUNTING BRACKET

Installation sheets for all mounting options are available at: www.axislighting.com

FINISH

White PC, Aluminum PC, Custom

APPROVALS

Certified to UL and CUL standards

OPTICAL SYSTEM

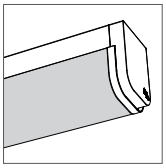

S satin lens

PMMA satin finish (0.060" nominal)

With efficiencies exceeding 80%, Air delivers softly diffused and ample illumination with a Satin lens which provides maximum glare reduction and light uniformity.

SYSTEMS (S#)

Runs of AIR that are greater than 12ft in length are designated as systems (S#). This means that the run is comprised of a combination of sections to be assembled on site using our joining system. For more information on systems and joining, please refer to the AIR installation sheets available for download at www.axislighting.com

OTHER MOUNTING OPTIONS

AIR is also available in pendant and surface mounted options.

Specification sheets for all mounting options are available for download at www.axislighting.com

CONSTRUCTION

CONSTRUCTION

Housing	Extruded aluminium (0.070" nominal) **70% recycled content**
End Cap	Die cast zinc (0.080" nominal)
Joiners	Die cast zinc (0.065" nominal)
Interior Brackets	Die formed Sheet Steel (18 gauge)
Reflectors	Die formed Sheet Steel (22 gauge)
Lens joiners	Die cast zinc (0.125" nominal)

ELECTRICAL

LED	Use of OptimaLED technology based on mid-flux LED
Input Voltage	120V, 277V, UNV.
Driver	Dimming, HiLume, EcoSystem, DALI,
CRI	Minimum 80 color rendering index
CCT	Choice of 3000k, 3500k and 4000k color temperature with a great color consistency (within 3.5–step MacAdam ellipse).
LED life	Minimum 50,000h with 70% of lumen maintenance in 25°C ambient temperature, in compliance with IES LM-80 testing measurements.
Thermal management	Aluminium housing acting as the heat spreader to maximize life.
Emergency	Emergency battery pack or emergency circuit optional.

WEIGHT

	WEIGHT
AIR 4 ft	9.5 lbs / 4.3 Kg
AIR 8 ft	19 lbs / 8.6 Kg
AIR 12 ft	28.5 lbs / 12.9 Kg

Conformed Set - May 29, 2015

Product design and development is an ongoing process at Axis Lighting. We reserve the right to change specifications. Contact Axis for the latest product information.

© 2011 Axis Lighting Inc.

axis LIGHTING
[T] 514.948.6272
[F] 514.948.6271
www.axislighting.com

INTEGRATED CONTROL OPTIONS

AIR luminaires allow the use of integrated controls such as daylight sensors (DS), occupancy sensors (OS), individual daylight sensors and occupancy sensors (DS+OS), and combination daylight/occupancy sensors (DOS). These options can be seamlessly integrated into our luminaires. The control system could be used to optimize the lighting of the space by reducing energy consumption through daylight harvesting and occupancy, thereby improving the overall interior environment and allowing for LEED credits.

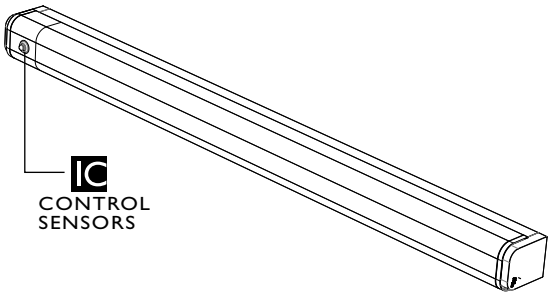

- Consult factory for other options.
- Refer to IC brochure for more information.

SENSORS	BRAND	Model	TYPE	CODE	COMPATIBLE DRIVER
Daylight Sensor (DS)	Lutron	EC-DIR-WH	Daylight	LD	EcoSystem
	Wattstopper	FD-301	Daylight	WD	Dimming 0-10V
	Philips	Luxsense	Daylight	PL	Dimming 0-10V
Occupancy Sensor (OS)	Wattstopper	FS-205	PIR Occupancy	WP1	Dimming or non-dimming
		FS-355 (Consult Factory)	PIR Occupancy	WP2	Dimming or non-dimming
Daylight and Occupancy Sensors (OS+DS)	Wattstopper Philips	Please consult factory			Dimming 0-10V

PHOTOMETRIC DATA

600 lm/ft

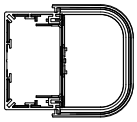

PHOTOMETRIC CURVE

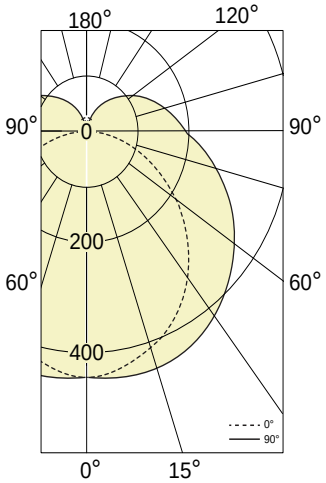

Lumaire Lumens: 600 lm/ft
Input Watts: 6.4 w/ft
Efficacy: 98.3 lm/w
IES FILE: ARWLED-B2-600-35-4.IES

CANDELA DISTRIBUTION

	Horizontal Angles					Zonal Lumens
Vertical Angle	0	23	45	68	90	
0	497	497	497	497	497	
5	492	497	499	503	505	12
15	473	487	498	507	511	35
25	436	457	479	496	504	55
35	384	413	447	471	481	69
45	321	359	403	438	450	77
55	250	296	353	397	411	77
65	173	228	297	349	365	71
75	95	160	238	295	313	59
85	24	100	182	240	258	45
90	1	77	159	217	235	39
95	0	68	147	203	220	36
105	0	56	127	178	194	30
115	0	47	107	152	166	24
125	0	39	88	126	138	18
135	0	29	69	99	109	12
145	0	21	48	73	80	7
155	0	14	30	45	53	3
165	0	7	16	22	28	1
175	0	2	4	5	2	0
180	0	0	0	0	0	

COEFFICIENTS OF UTILIZATION (%)

Ceiling	80				70				50		
Wall	70	50	30	10	70	50	30	10	50	30	10
0	114	114	114	114	109	109	109	109	100	100	100
1	101	95	90	83	96	91	86	80	83	79	74
2	91	81	73	64	86	78	70	62	71	65	58
3	82	70	61	51	78	67	59	50	61	54	46
4	75	62	52	42	71	59	50	41	54	47	38
5	68	55	45	35	65	52	44	34	48	40	32
6	63	49	40	30	60	47	38	29	43	36	28
7	58	44	35	26	55	42	34	26	39	32	24
8	54	40	31	23	51	38	30	22	35	28	21
9	50	37	28	20	48	35	27	20	32	26	19
10	47	34	26	18	45	32	25	18	30	23	17

Based on floor reflectance of 20

LUMINANCE DATA (CD/M^2)

	Horizontal Angles		
Vertical Angle	0	45	90
45	4360	3738	3682
55	4182	3547	3538
65	3922	3366	3432
75	3529	3207	3338
85	2695	3152	3316

All IES files are available for download at: www.axislighting.com

Conformed Set - May 29, 2015

Product design and development is an ongoing process at Axis Lighting. We reserve the right to change specifications. Contact Axis for the latest product information.

© 2011 Axis Lighting Inc.

Unilume LED Slimline

TYPE L11

title 24

WHITE
(SHOWN OFF)

BLACK
(SHOWN ON)

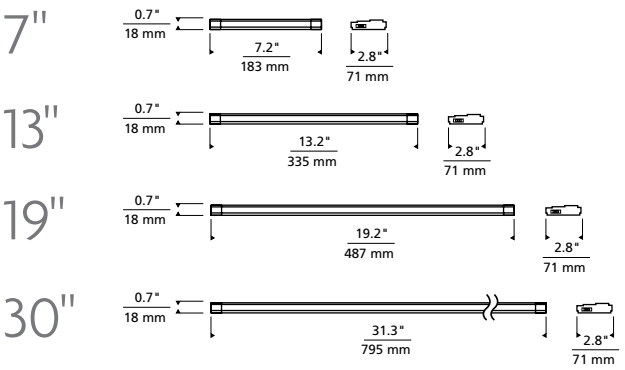

DESCRIPTION

Utilizing tightly clustered blue LEDs, a 98% reflective mixing chamber and an Intematix ChromaLit™ remote phosphor lens, the result is consistent illumination with ultra high efficiency – all in a housing that is less than 3/4 of an inch deep. An integrated LED driver makes installation easy and allows smooth dimming down to 15% using a standard or ELV dimmer. Available in two color temperatures: 2700 and 3000K and choice of CRI: +80 or +90 in black or white housing.

INTEGRATED DRIVER AND SMOOTH DIMMING

120 volt input makes installation easy. Smooth dimming down to 15% using ELV dimmer. Jumper cables make it easy to link one unit to another (sold separately). Each unit has an integrated on-off switch.

TECHNICAL SPECIFICATIONS

	7" Length	13" Length	19" Length	30" Length
System Power:	4.0 watts	8.5 watts	10.5 watts	18.0 watts
System Lumens:	215	432	645	1100
System Efficacy:	54 lms/watt	51 lms/watt	61 lms/watt	61 lms/watt
Color Temperatures:	2700K, 3000K	2700K, 3000K	2700K, 3000K	2700K, 3000K
Color Rendering Index:	80+, 90+	80+, 90+	80+, 90+	80+, 90+
Rated Average Life:	50,000 hours to 70%	50,000 hours to 70%	50,000 hours to 70%	50,000 hours to 70%
Power Factor:	0.94	0.94	0.94	0.94
Dimming:	To 15% with ELV Dimmer	To 15% with ELV Dimmer	To 15% with ELV Dimmer	To 15% with ELV Dimmer
Warranty:	5 years	5 years	5 years	5 years

ORDERING INFORMATION

700UCF	LENGTH	CRI	COLOR TEMPERATURE	FINISH	LAMP TYPE
	07 7.2"	**8** 80+	**2** 2700K	**B** BLACK	**-LED** LED
	13 13.2"	**9** 90+	**3** 3000K	**W** WHITE	
	19 19.2"				
	31 31.3"				

TECH LIGHTING®

7400 Linder Avenue
Skokie, Illinois 60077

T 847.410.4400
F 847.410.4500

www.techlighting.com

700UCF _____ _____ _____ _____-LED

FIXTURE TYPE: _____

JOB NAME: _____

Conformed Set - May 29, 2015

© 2013 Tech Lighting, L.L.C. All rights reserved. The "Tech Lighting" graphic is a registered trademark of Tech Lighting, L.L.C.
Tech Lighting reserves the right to change specifications for product improvements without notification.

Unilume LED Slimline Accessories

TYPE L11

SPLICE BOX

Required for hardwire applications. A connection port is located on each side to feed runs in both directions. The 1" Jumper Connector can be used to place the Splice Box next to the Undercabinet Housing or a longer Jumper Connector can be used to place the Splice Box in a more convenient or remote location. Includes Romex 3/8" conduit connector.

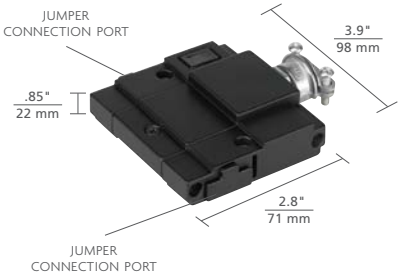

700UCSB	FINISH
	B BLACK
	W WHITE

* REQUIRES JUMPER CABLE, TO BE ORDERED SEPARATELY

JUMPER CONNECTORS

Can be used to link one Undercabinet Housing to another or to a Splice Box. The maximum wattage for a single run is 600 watts. Use Female to Female Connector to create longer lengths or contact us for custom lengths.

700UCJC	LENGTH*	COLOR
	01 1"	**B** BLACK
	03 3"	**W** WHITE
	12 12"	
	24 24"	

* FOR CUSTOM LENGTHS, CONTACT OUR FACTORY

FEMALE TO FEMALE CONNECTOR

Joins two Jumper Connectors together.

700UCFFC	COLOR
	B BLACK
	W WHITE

"T" CONNECTOR

Used to join three male connectors together.

700UCTC	COLOR
	B BLACK
	W WHITE

PLUG-IN WALL FEED

Can be used to plug one Undercabinet Housing directly into an outlet.

700UCPL	LENGTH*	COLOR
	24 24"	**B** BLACK
	72 72"	**W** WHITE

* FOR CUSTOM LENGTHS, CONTACT OUR FACTORY

UNILUME LED SLIMLINE AWARDS

LIGHTING for tomorrow 2012 Winner

2012 PROGRESS Report SELECTION

PRODUCT INNOVATION pia 13 AWARD WINNER

TECH LIGHTING®

7400 Linder Avenue
Skokie, Illinois 60077

T 847.410.4400
F 847.410.4500

www.techlighting.com

Conformed Set - May 29, 2015

© 2013 Tech Lighting, L.L.C. All rights reserved. The "Tech Lighting" graphic is a registered trademark of Tech Lighting, L.L.C.
Tech Lighting reserves the right to change specifications for product improvements without notification.

LED

TYPE L12 SERIES

FINELITE

High Performance 4” Aperture (HP-4) - Indirect/Direct

Date	
Project	
Type	
Comments	

Top Glow diffuser shown

DESCRIPTION

High Performance 4” aperture indirect/direct pendant (HP-4 ID) is a patent pending, linear LED luminaire for offices, schools, retail and healthcare facilities. Advanced optical designs and mid-powered LEDs deliver an efficient, long-lasting luminaire free of glare and socket shadows for single and continuous lighting applications. HP-4 ID is RoHS compliant.

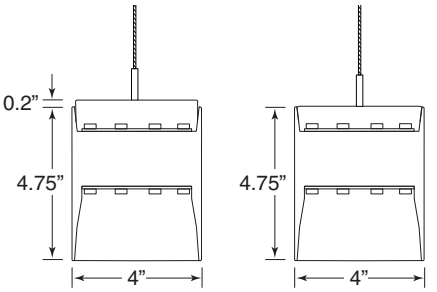

Top Glow™ Diffuser (Standard)

Flush Uplight Diffuser (Optional)

DIMENSIONS & DIFFUSER:

A glare-free experience is attained with mid-powered LEDs properly distributed and paired with a precise diffuser to eliminate pixilation.

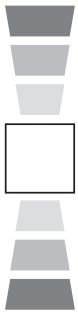

INDIRECT/DIRECT DIMMING:

Uplight and downlight can be dimmed together or individually for maximum control over your space. 0-10v controls; range 100%-10%.

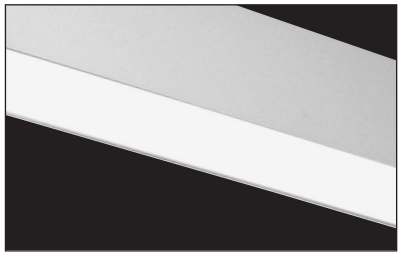

SEAMLESS ILLUMINATION:

The optical design features seamless lenses up to 12’ in length and eliminates socket shadows at joints and corners.

ORDERING GUIDE

Sample Number: HP-4 ID - 32’ - SO - HO - 3500K - TG- 120V - FA - SC - C1

HP-4 ID

Finelite **Series HP-4 ID**
Size (4’, 8’, 12’ multiples standard)
Uplight Engine (SO - Standard Output, HO - High Output)
Downlight Engine (SO - Standard Output, HO - High Output)
LED Color Temperature (3000K, 3500K, 4000K)
Uplight Diffuser Option (TG-Top Glow, F-Flush)*
Voltage (120, 277V)
Mounting (FA)
Circuiting (SC-Single Circuit, MC-Multi-Circuit)
Ceiling Type (C1-1" T-Bar, C2-9/16" T-Bar, C3-Screw Slot, C4-Hard Ceiling)

* Top Glow Diffuser - Standard, Flush Uplight Diffuser - Optional

Patent Pending

Finelite, Inc. • 30500 Whipple Road • Union City, CA 94587-1530 • 510 / 441-1100 • Fax: 510 / 441-1510 • www.finelite.com

Due to continuing product improvements, Finelite reserves the right to change specifications without notice. Please visit www.finelite.com for most current data.

Conformed Set - May 29, 2015

© 2013 FINELITE, INC. ALL RIGHTS RESERVED.

Form CTK0073.10/13

LED

TYPE L12 SERIES

FINELITE

High Performance 4” Aperture (HP-4) - Indirect/Direct

PHOTOMETRY

Standard Output/ Standard Output
Distribution: 55% Up (SO) / 45% Down (SO)
1719 Lumens Up / 1408 Lumens Down
Efficacy (Lumen per watt): 95 LPW Up/ 77 LPW Down
Total luminaire output: 3127 Lumens/ 36 Watts
CRI: 83
R9: 9
CCT: 4000K
ITL LM79 Report 74369

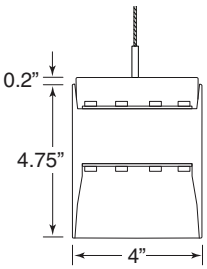

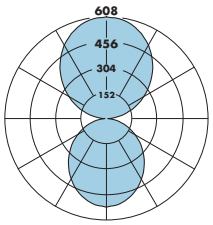

— Refer to www.finelite.com for additional photometry and product information.

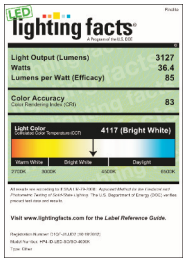

CANDLEPOWER SUMMARY

	0.0	22.5	45	67.5	90	Flux
0	528	528	528	528	528	
5	525	526	527	523	521	50
15	499	502	502	497	494	141
25	453	459	453	452	447	209
35	393	397	390	391	387	245
45	321	325	317	320	316	247
55	246	250	242	246	241	219
65	166	171	164	169	164	166
75	92	97	92	97	92	100
85	25	29	26	31	26	32
90	0	5	6	7	8	
95	37	44	38	45	39	45
105	120	125	119	126	120	129
115	207	215	208	216	208	209
125	302	306	301	305	300	271
135	389	395	388	393	387	302
145	470	472	469	471	467	294
155	535	539	535	536	532	247
165	582	584	584	582	580	164
175	605	606	607	602	602	57
180	606	606	606	606	606	

PHOTOMETRY

Standard Output/ High Output
Distribution: 38% Up (SO) / 62% Down (HO)
1697 Lumens Up / 2735 Lumens Down
Efficacy (Lumen per watt): 93 LPW Up/ 74 LPW Down
Total luminaire output: 4431 Lumens/ 55 Watts
CRI: 84
R9: 10
CCT: 4000K
ITL LM79 Report 74367

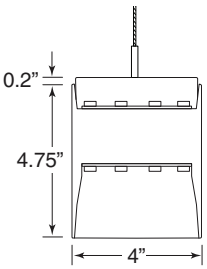

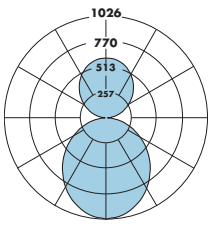

— Refer to www.finelite.com for additional photometry and product information.

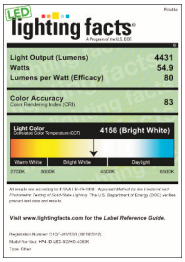

CANDLEPOWER SUMMARY

	0.0	22.5	45	67.5	90	Flux
0	1023	1023	1023	1023	1023	
5	1017	1017	1022	1010	1009	96
15	969	970	973	960	961	273
25	883	888	882	873	871	405
35	767	769	762	756	754	476
45	630	629	620	617	619	481
55	481	482	474	475	473	425
65	330	327	323	325	323	323
75	184	184	183	184	182	193
85	53	53	54	57	54	62
90	0	5	8	10	12	
95	31	42	34	43	36	43
105	113	121	115	122	116	125
115	201	210	202	212	203	205
125	296	301	295	302	296	267
135	382	390	383	389	382	298
145	465	469	465	468	464	292
155	531	536	532	535	529	246
165	578	582	582	580	577	164
175	603	604	605	601	601	57
180	604	604	604	604	604	

PHOTOMETRY

High Output / Standard Output
Distribution: 70% Up (HO) / 31% Down (SO)
3259 Lumens Up / 1431 Lumens Down
Efficacy (Lumen per watt): 88 LPW Up/ 78 LPW Down
Total luminaire output: 4690 Lumens/ 55 Watts
CRI: 83
R9: 10
CCT: 4000K
ITL LM79 Report 74368

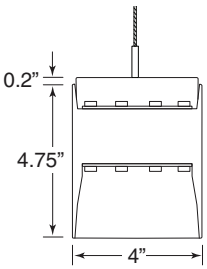

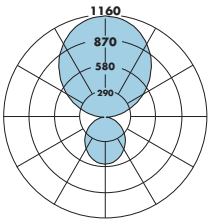

— Refer to www.finelite.com for additional photometry and product information.

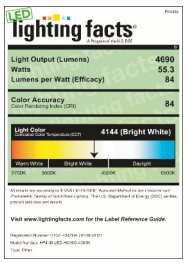

CANDLEPOWER SUMMARY

	0.0	22.5	45	67.5	90	Flux
0	535	535	535	535	535	
5	532	534	537	533	530	51
15	506	512	512	507	504	143
25	459	467	461	460	454	212
35	398	404	397	398	392	249
45	325	330	323	325	320	251
55	247	253	244	249	244	221
65	168	174	166	171	166	168
75	93	99	93	99	94	101
85	25	31	27	33	30	34
90	0	4	7	9	12	
95	69	77	72	80	73	83
105	230	233	231	231	231	243
115	399	402	398	402	400	396
125	579	577	573	576	573	514
135	742	745	738	743	736	572
145	893	895	892	891	890	559
155	1021	1022	1021	1017	1012	469
165	1110	1111	1112	1104	1103	313
175	1155	1156	1157	1147	1148	110
180	1157	1157	1157	1157	1157	

PHOTOMETRY

High Output / High Output
Distribution: 54% Up (HO) / 46% Down (HO)
3188 Lumens Up / 2725 Lumens Down
Efficacy (Lumen per watt): 86 LPW Up/ 73 LPW Down
Total luminaire output: 5913 Lumens/ 74 Watts
CRI: 83
R9: 9
CCT: 4000K
ITL LM79 Report 74181

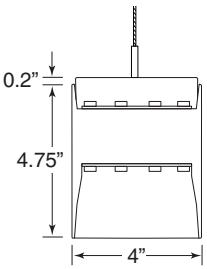

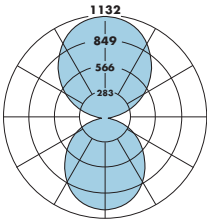

— Refer to www.finelite.com for additional photometry and product information.

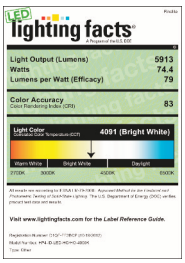

CANDLEPOWER SUMMARY

	0.0	22.5	45	67.5	90	Flux
0	1016	1016	1016	1016	1016	
5	1013	1013	1017	1007	1006	96
15	965	968	971	958	958	272
25	879	883	879	869	867	403
35	764	763	757	750	751	473
45	626	626	617	612	615	478
55	479	477	472	470	472	423
65	328	327	321	321	320	321
75	187	185	183	186	184	194
85	55	57	57	58	57	64
90	0	7	8	12	14	
95	69	74	70	76	72	80
105	222	224	225	225	226	237
115	385	392	388	394	391	387
125	565	562	562	562	560	503
135	727	730	727	727	720	561
145	876	876	877	872	871	548
155	999	1001	999	995	992	460
165	1086	1086	1088	1081	1081	306
175	1129	1128	1130	1121	1123	107
180	1128	1128	1128	1128	1128	

Consult www.finelite.com for 3000K and 3500K photometric reports.

Patent Pending

Finelite, Inc. • 30500 Whipple Road • Union City, CA 94587-1530 • 510 / 441-1100 • Fax: 510 / 441-1510 • www.finelite.com

Due to continuing product improvements, Finelite reserves the right to change specifications without notice. Please visit www.finelite.com for most current data.

Conformed Set - May 29, 2015

© 2013 FINELITE, INC. ALL RIGHTS RESERVED.

Form CTK0073.10/13

LED

TYPE L12 SERIES

FINELITE

High Performance 4” Aperture (HP-4) - Indirect/Direct

SPECIFICATIONS

CONSTRUCTION: Precision cut 6061-T6 extruded aluminum body. Internal joiner system, plug-together wiring standard.

ENDCAPS: Diecast aluminum endcap. Adds 0.25” to each end.

REFLECTORS: Die-formed 20-gauge cold-rolled steel reflectors are finished in 96 LG high reflectance matte white powder coat paint.

UPLIGHT DIFFUSER: Top Glow™ lens frost white standard, 73% transmissive, 99% diffusion. Optional: Flush frost white snap-in lens, 73% transmissive, 99% diffusion.

DOWNLIGHT DIFFUSER: Flush frost white snap-in lens, 73% transmissive, 99% diffusion.

LIGHT ENGINE: HP-4 is available with a choice of four distributions. Both the Indirect and Direct distribution can be specified in Standard Output (SO) or High Output (HO). The chart below summarizes the lumen distribution and wattage. LM79 test reports are available for each distribution. Light engine is made up of high performance mid-powered LEDs and is designed to distribute heat properly to maximize the life of the LED.

LED COLOR TEMPERATURE:
Available in 3000K, 3500K, and 4000K. See chart below.

DRIVER: High Performance LED Driver. 120/277v. Power factor = **(3000K)** 98% - HO/HO, 96.3% - HO/SO, 96.6% - SO/HO, 95% - SO/SO, **(3500K)** 97.7% - HO/SO, 96.3% - HO/SO, 97% - SO/HO, 94% - SO/SO and **(4000K)** 97.4% - HO/HO, 96.4% - HO/SO, 96.7% - SO/HO, 93.1% - SO/SO. Total Harmonic Distortion <20%. Input Current (120v): **3000K**: HO/HO = 0.631A, HO/SO = 0.474A, SO/HO = 0.478A, SO/SO = 0.315A. **3500K**: HO/HO = 0.632A, HO/SO = 0.474A, SO/HO = 0.477A, SO/SO = 0.32A. **4000K**: HO/HO = 0.636A, HO/SO = 0.473A, SO/HO = 0.475A, SO/SO = 0.325A. Lutron driver options: Lut3W- 3-wire driver, LutES - EcoSystem driver, Lut2W - 2-wire driver.
*Driver is wired for dimming or non-dimming. Dimming is compatible with 0-10v controls with a range of 100-10%. Separate dimming for uplight and downlight.

LUMEN MAINTENANCE: HP-4 ID is rated to deliver 90% lumen maintenance (L90) to 100,000 hours and 70% lumen maintenance (L70) to 168,000 hours.

ELECTRICAL: 120 or 277V prewired. Optional Adders: emergency circuits, emergency battery packs. Minimum of 3’ fixture length for battery packs. Maximum of one battery pack per 3’ of fixture. Contact factory.

MOUNTING: (FA) 50” fully adjustable aircraft cable standard with safety stop. Contact factory for additional lengths up to 150”.

FINISHES: Finelite Signal White standard. Optional Adders: 185 colors available from Tiger Drylac’s RAL color chart.

SUPPORT CABLES: Plated steel cable and hardware.

FEED: Standard with one 18 gauge/5 conductor single circuit feed controlling uplight and downlight together (power and dimming). Specify dual feeds for independent control of uplight and downlight. 14 gauge feed cord used when fixture current exceeds 5 amps.

LENGTHS: Standard 4’, 8’, and 12’ section lengths can be combined to make longer runs. Contact factory for lengths in increments of 1’ or down to the inch.

WEIGHT: Fixture weight = 3 lb/ft.

LABELS: Fixture and electrical components are UL/C-UL listed and fixture will bear UL/C-UL labels. Damp Location.

WARRANTY: HP-4 ID comes standard with a 10-year warranty on all components.

LED Color Temperature (CRI & R9)				
	↑ SO/SO ↓	↑ SO/HO ↓	↑ HO/SO ↓	↑ HO/HO ↓
3000K CRI/R9	87/35	87/34	87/34	87/34
3500K CRI/R9	85/19	85/21	85/21	84/18
4000K CRI/R9	83/9	83/10	84/10	83/9

Lumen Distribution - Per 4’ Section				
	↑ SO/SO ↓	↑ SO/HO ↓	↑ HO/SO ↓	↑ HO/HO ↓
Uplight lumens	1719	1697	3259	3188
Uplight watts	18.2	18.3	37	37.2
Lumens per watt	95	93	88	86
Downlight lumens	1408	2735	1431	2725
Downlight watts	18.2	37	18.3	37.2
Lumens per watt	77	74	78	73

Patent Pending

Finelite, Inc. • 30500 Whipple Road • Union City, CA 94587-1530 • 510 / 441-1100 • Fax: 510 / 441-1510 • www.finelite.com

Due to continuing product improvements, Finelite reserves the right to change specifications without notice. Please visit www.finelite.com for most current data.

Conformed Set - May 29, 2015

© 2013 FINELITE, INC. ALL RIGHTS RESERVED. Form CTK0073.10/13

IL-ARTRKO / RTRA300

LED Adjustable Round Trim
Adjustable Reflector - KO Spot Optic

JOB N	TYPE L13		
NOTES		TYPE	

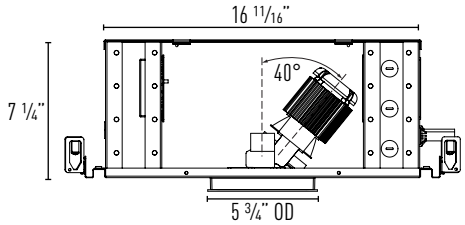

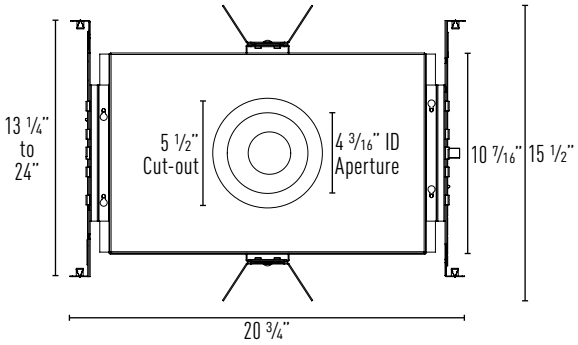

Catalog Number	Delivered Lumens [1]	CBCP [1]	System Wattage [2]
IL-ARTRKO-L2	538 lm	12724	15W
IL-ARTRKO-L3	678 lm	16027	20W

[1] Delivered lumens and CBCP output will vary depending on CCT, CRI and optic selection.
[2] System Wattage include driver and LED Module consumption.

OPTICS
- 40° vertical adjustment
- Precise center beam optics
- Hot aiming from below finished ceiling line
- Locking vertical and horizontal aiming
- Accessory holder can hold up-to 2 media
- Innovative KO Spot Optic delivers a high level of CBCP with minimal field

LED LIGHT ENGINE
- 2700K, 3000K, 3500K and 4100K 82 CRI
- 2700K and 3000K 92 CRI (R9 Value = 59)
- 3 Step MacAdam (3 SDMC)
- LED mounted to die-cast / extruded aluminum heat sink w/ active cooling
- 50,000 hours average rated life at 70% output
- LED light engine, SynJet and driver are all accessible from below the ceiling

THERMAL MANAGEMENT
- Utilizes passive cooling

ELECTRICAL SYSTEM
- Power factor >.9, 50/60Hz
- Multiple dimming drivers available
- Consult factory for DALI compatibility

HOUSING
Heavy duty black powder coated .18 gauge steel frame. Standard plaster frame accommodates 5/8" ceiling thickness. Specify -1 for ceiling thickness up to 1". Junction box and driver are located on opposite ends of the housing, with easy access for maintenance and installation.

TRIM SPECIFICATION
Specification grade reflectors made in the USA. Reflector available in specular black, specular clear, haze or matte white. Architectural, discrete polished self flange or painted white flange options available.

INSTALLATION
Housing types include IC Air-Tight, CCEA (Chicago Plenum), or Non-IC Rated (must specify). Non-IC rated housings must be kept at a minimum of 3" away from insulation. Butterfly brackets and adjustable hanger bars (14"-25") with integral nail included. Butterfly brackets are compatible with C-channel, flat bar hanger and EMT. C-channel is recommended for T-bar ceilings. C-Channel and flat bar hangers must be ordered separately.

EMERGENCY BACKUP
Remote test switch included. Emergency driver operates LED load of up to 7.0 Watts at a maximum rated current (270mA) for a minimum of 90 minutes. See submittal sheet IB-BSL17C-C2 for specifications.

ACCESSORIES
Integral accessory holder accommodates (2) diffusion or color filters. See accessory submittal sheet for options. Accessory holder included with luminaire.

LISTING / WARRANTY
- 10 Year Intense LED Limited Warranty
- ETL listed to US and Canadian standards for damp locations
- (-AIC Only) Air Tight Certified ASTM E283
- (-AIC Only) ETL listed for direct contact w/ insulation
- (-CP Only) CCEA Chicago Plenum

Housing Specification:

Example: IL-ARTRKO-NCL227D10V-12-EM

SERIES
Non-IC LED **IL-ARTRKO-NC**
Air Tight IC LED **IL-ARTRKO-AIC**
CCEA LED **IL-ARTRKO-CP**

LED LIGHT ENGINE
15 Watts **L2**
20 Watts **L3**

CCT / CRI
2700K / 82 CRI **27**
2700K / 92 CRI **279** [1]
3000K / 82 CRI **30**
3000K / 92 CRI **309** [1]
3500K / 82 CRI **35**
4100K / 82 CRI **41**

DIMMING
Non-Dimming blank
0-10V Dimming **D10V**
Lutron Hi-Lume® 1% **LUT1**
Lutron EcoSystem® **LUT**

VOLTAGE
120V blank
277V **27**

OPTIC
12° KO Spot **-12**

ACCESSORIES
Plaster Frame up to 1" **-1**
Emergency Backup **-EM** [2]
C-Channel Bar Hangers **-I100**
Flat Bar Hangers **-I200**

Trim Specification:

Example: RTRA300W-SF

SERIES
Round Trimmed Adjustable Reflector **RTRA300**

REFLECTOR FINISH
Specular Black **B**
Specular Clear **C**
Haze **HZ**
Matte White **W** [3]

TRIM
Self Flanged **-SF**
Self Flanged White **-SFW**

Notes:
1. 97 CRI special order, consult factory
2. Access above ceiling required
3. Matte white reflector may only be specified with self flange trim

Intense Lighting | 3340. E La Palma Ave. | Anaheim, CA 92806 | **Phone:** 1.800.961.5321 | **Fax:** 1.800.961.5322 | www.**intenselighting**.com
Note: Specifications and dimensions subject to change without notice. **Conformed Set - May 29, 2015**

impression™

JOB N	TYPE L13		
NOTES		TYPE	

IL-ARTRKO / RTRA300

Report #: L03136302

LM-79-08 IESNA

15W (L227)

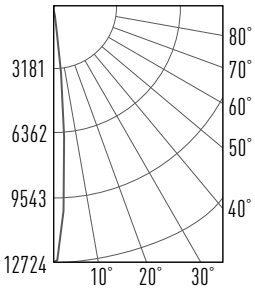

Watts: 15
Lumens: 538.26
LPW: 35.88
CCT: 2756K
CRI: 80.7

Candelas at Nadir

Degree	Candela
0°	12724
5°	6504.52
10°	916.17
15°	140.52
20°	84.02
25°	52.93

20W (L327)

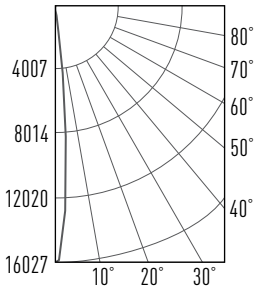

Watts: 20
Lumens: 677.99
LPW: 33.9
CCT: 2826K
CRI: 81.5

Candelas at Nadir

Degree	Candela
0°	16027
5°	8193
10°	1154
15°	177
20°	106
25°	67

APPLICATION DATA:

W and **L** are the outer points where the candle power drops to 50% of maximum. **FC** are the initial foot candles at the center of the beam.

W Beam width
L Beam length
C Distance to center of beam
D Distance
FC Foot candles

Illuminated width & length are based upon point at which illuminance falls to 50% of center illuminance. Recommended spacing is based upon uniform illuminance aiming angle is the angle between the lamp axis and the perpendicular to the illuminated plane.

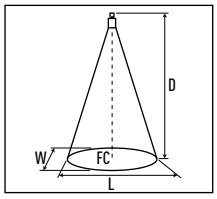

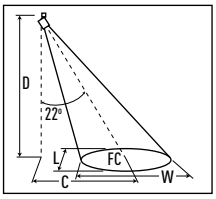

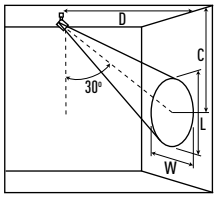

	0° HORIZONTAL				22° HORIZONTAL					30° VERTICAL				
	D	FC	W	L	D	C	FC	W	L	D	C	FC	W	L
IL-ARTRKO-L227-12 12° Spot	**6'**	353	1.07	1.07	**6'**	2.5	277	1.26	1.16	**3.0'**	5	191	1.02	1.93
	8'	199	1.43	1.43	**8'**	3.25	158	1.66	1.53	**4.0'**	6.5	107	1.37	2.59
	10'	127	1.79	1.79	**10'**	4	102	2.06	1.91	**5.0'**	8.25	68.8	1.71	3.23
	12'	88.4	2.14	2.14	**12'**	4.75	70.8	2.29	2.46	**6.0'**	10	47.7	2.04	3.87
IL-ARTRKO-L327-12 12° Spot	**6'**	445	1.07	1.07	**6'**	2.5	348	1.26	1.16	**3.0'**	5	241	1.02	1.93
	8'	250	1.43	1.43	**8'**	3.25	199	1.66	1.53	**4.0'**	6.5	135	1.37	2.59
	10'	160	1.79	1.79	**10'**	4	128	2.06	1.91	**5.0'**	8.25	86.6	1.71	3.23
	12'	111	2.14	2.14	**12'**	4.75	89.2	2.29	2.46	**6.0'**	10	60.1	2.04	3.87

All testing was conducted in accordance with **LM-79-08**, Approved Method: Electrical and Photometric Measurements of Solid-State Lighting Products as published by the Illuminating Engineering Society of North America (IESNA).

Stabilization time before testing exceeded 16 hours. Ambient temperature during testing was 25°C ± 1°C.

Intense Lighting | 3340. E La Palma Ave. | Anaheim, CA 92806 | **Phone:** 1.800.961.5321 | **Fax:** 1.800.961.5322 | www.**intenselighting**.com
Note: Specifications and dimensions subject to change without notice. **Conformed Set - May 29, 2015**

intense® LIGHTING

Impression Accessories

Adjustable Trim Accessories

JOB N	TYPE L13		
NOTES		TYPE	

Impression Accessories

	Catalog Number	Description
	IMPRESSION ADJUSTABLE ACCESSORIES	
	PFL1-57	Prismatic Spread Lens
	PFL2-57	Linear Spread Lens
	PFL4-57	Solite Lens
	PL5-57	Amber Lens
	PL6-57	Red Lens
	PL9-57	Blue Lens
	PFLMB-57	Black Louver

Intense Lighting | 3340. E La Palma Ave. | Anaheim, CA 92806 | **Phone:** 1.800.961.5321 | **Fax:** 1.800.961.5322 | www.**intenselighting**.com

Note: Specifications and dimensions subject to change without notice. **Conformed Set - May 29, 2015**

COMBO round led

TYPE L14

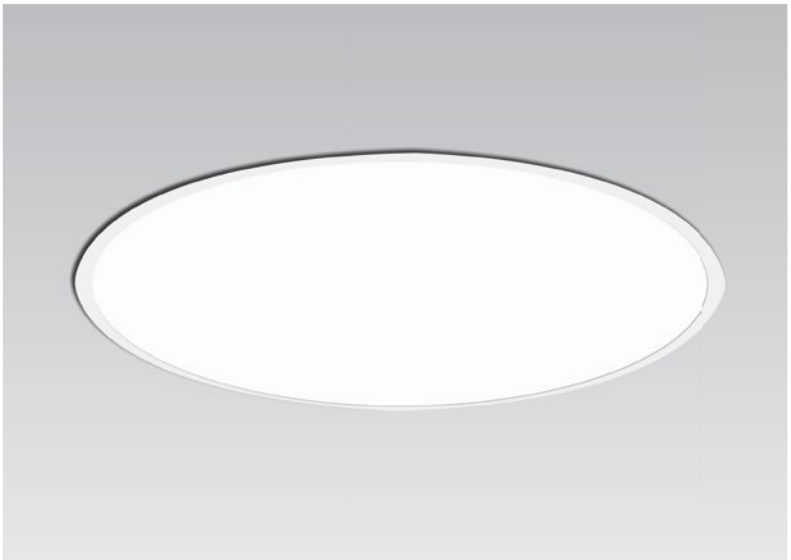

Recessed trimmed round shaped fixture for installation in plaster ceilings of 1/2", 5/8", 3/4" or 1" thickness. Housing made of white powder coated aluminium. Surrounding seamless trim available in white or gray

Enhanced glare control through lay in shielding. Opal cover for uniform illumination and increased light transmission at 94 lm/W and a total light fixture efficiency of η = 82% at 4000K

Optional microprismatic diffuser achieving dynamic 3D MIRAGE effect

Use of long life, 50,000 hour high efficient medium power e LEDs at 80% lumen maintenance (LM 80) and up to 94lm|W, or optional high output performance e² LEDs. Superior color temperature consistency to a 3-step McAdams ellipse, available in 2700K/CRI >84, 3000K/CRI >84, 3500K/CRI >83 or 4000K/CRI >83

Integrated drivers with 120V | 277V as standard universal input voltage and various dimming options available

RANGE	MOUNTING	DIMENSION | LAMPING	ELECTRICAL	SHIELDING	FINISH
N661	-121	-0___	-7___	-_	-_0

SERIES

COMBO ROUND LED

INSTALLATION

1__ recessed

TRIM

_2_ sheet rock

SHAPE

__1 ROUND LED

	DIMENSION		LAMP	WATT	LOR	LM|W
QS	0061	Ø 7"	24x e² LED	7W	520lm	79lm|W
QS	0100	Ø 10"	40x e LED	6W	495lm	88lm|W
	0101	Ø 10"	40x e² LED	12W	905lm	77lm|W
QS	0140	Ø 14"	80x e LED	11W	985lm	88lm|W
	0141	Ø 14"	80x e² LED	23W	1810lm	77lm|W
QS	0180	Ø 18"	120x e LED	17W	1480lm	88lm|W
	0181	Ø 18"	120x e² LED	35W	2710lm	77lm|W
	0260	Ø 26"	224x e LED	31W	2950lm	94lm|W
	0261	Ø 26"	224x e² LED	66W	5400lm	82lm|W
	0380	Ø 38"	480x e LED	67W	6320lm	94lm|W
	0381	Ø 38"	480x e² LED	141W	11570lm	82lm|W

i fixture total lumen output based on 4000K and opal cover

VOLTAGE

7___ 120 | 277V UNV

DIMMING

QS 71__ no dimming
72__ DIM 0-10V
7H__ Hi-lume (1%) 3-wire hot dim
7D__ Hi-lume (1%) digital dim

i dimming 0-10V for e² LED only

COLOR TEMPERATURE

__4_ 2700K CRI >84
QS __5_ 3000K CRI >84
__7_ 3500K CRI >83
__6_ 4000K CRI >83

EMERGENCY

QS ___0 no emergency
___1 90 min. emergency battery pack

i emergency battery pack only available for non-dim fixtures >26"
for dimmable fixtures, please consult factory

COVER

QS O opal
P microprismatic

COLOR

6_ gray
QS 7_ white

QS 20 Business Day QuickShip items

DRAWING

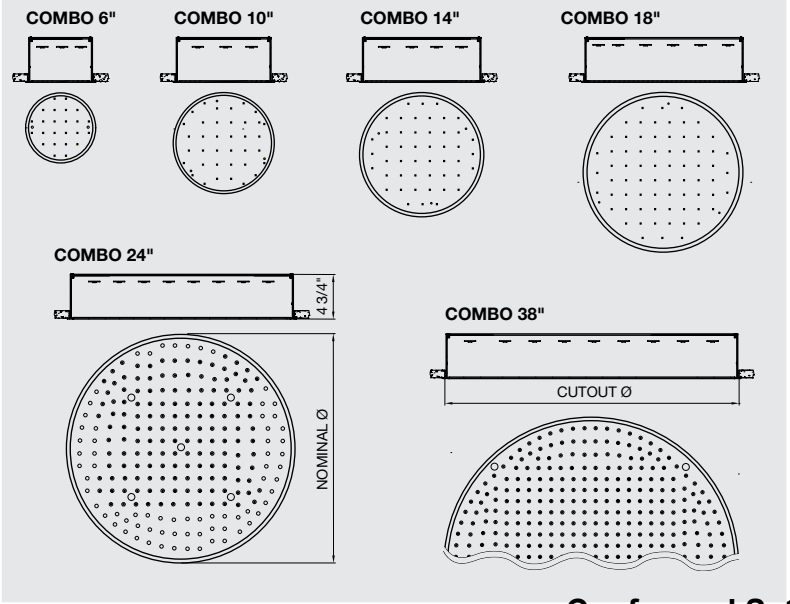

FIXTURE | CUTOUT DIMENSION

Code	Nominal	Dimensions	Cutout
0061	Ø 7"	Ø 7 5/16"	Ø 6 13/16"
0100 | 0101	Ø 10"	Ø 10 7/8"	Ø 10 3/8"
0140 | 0141	Ø 14"	Ø 14 3/8"	Ø 13 7/8"
0180 | 0181	Ø 18"	Ø 18 1/4"	Ø 17 13/16"
0260 | 0261	Ø 26"	Ø 26 1/4"	Ø 25 13/16"
0380 | 0381	Ø 38"	Ø 37 15/16"	Ø 37 5/8"

ACCESSORY

MOUNTING SET for plaster ceiling installation

TYPE	CODE
COMBO ROUND 18"	**661-01450**
COMBO ROUND 26"	**661-01650**
COMBO ROUND 38"	**661-01950**

SHIELDING

O opal
P microprismatic

FINISH

6 gray
7 white

TYPE L15A

a·light

elements

X6

suspended | ceiling

Conformed Set - May 29, 2015

TYPE L15A

direct

suspended

ceiling

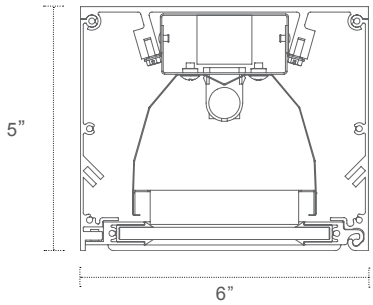

single T5 fluorescent

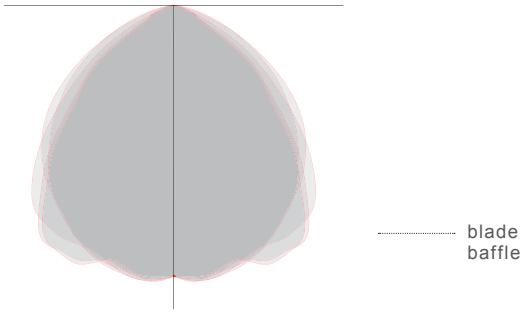

LED per foot	1 board in cross watts/ft	lumens/ft
LL	2	120
LS	5	600

specifications subject to change
~ lumens at 4000k

Available Light Platforms:

Available Mounting:

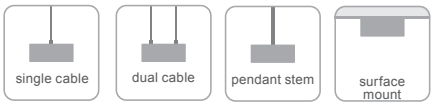

Conformed Set - May 29, 2015

TYPE L15A

interior **exterior**

Mounting:
Single or Dual Cable: (1) or (2) 4', 3/32" galvanized aircraft cable w/ fully adjustable grippers and locking device. 5' plastic-coated, silver-braided, flexible cord. Satin white, square canopy is standard.

Pendant/Stem: 3/8" stem and round canopy, painted white. Indicate pendant length. If specified for earthquake zone, a·light will provide swivel canopies.

Ceiling/Surface Mount: Fixture mounts directly to ceiling, power connects inside fixture using BX or MX style wiring.

Lengths:
All length dimensions are nominal and used for general length identification purposes. Actual lengths may vary by several inches. Luminaires are individual fixtures and are not connectable.

LED:
5yr warranty. >60,000hr LED life. Tested to LM-79 and LM-80. See wattage/lumen table for specifications per foot. All specifications are subject to change.

T5/T5HO:
Single or dual lamps in cross section. Program start is factory standard.

T8:
Single or dual lamps in cross section. Instant start is factory standard: choose low <0.8BF; standard 0.8-1.0BF; high >1.0BF. Specify if program start or custom ballast factor is required.

Construction:
60% recycled aluminum extruded housing. Precision-milled endcaps. Impact-resistant, 1/4" tempered glass or polycarbonate outer lens. Neoprene gasketed, hinged, aluminum extruded door frame.

Finish:
Electrostatically applied powder coat finish housing with clear anodized aluminum door frame. Housing cannot be anodized.

Listing:
UL/CUL. Wet Location.

Legend:
1. Standard multi-circuiting: see fixture chart below.
2. a·cirrus™ recommended for LED.

Series:		X6
Dimension:		
nominal 4'		4
nominal 8'		8
Lamping:		
LED low output	2	LL
LED standard output	2	LS
T5 (1)		S
T5HO (1)		H
T5 (2)		D
T5HO (2)		O
T8 (1) low output		T8L
T8 (1) standard output		T8S
T8 (1) high output		T8H
T8 (2) low output		T8LD
T8 (2) standard output		T8SD
T8 (2) high output		T8HD
LED Temp (if applicable):		
3000k		30
3500k		35
4000k		40
Voltage:		
universal 120V - 277V		U
120V		1
277V		2
347V		3
Lens:		
clear tempered glass		G
clear polycarbonate		P
Optics:		
a·cirrus™ lens	2	A
white blade baffle		B
Mounting:		
single aircraft cable		S
dual aircraft cable		D
pendant / rigid stem - indicate stem length		P__
pendant / rigid stem for earthquake zone - indicate stem length		PV__
surface/ceiling mount		F
Finish:		
a·lightanium™		T
satin black		B
dark bronze		DB
other - specify RAL#		O
Options:		
dimming - specify manufacturer, model/series and voltage		D
emergency (fluorescent only) - specify model/series or lumens		E
external fusing		F
multi-circuit	1	M
new york city code		N

suspended
ceiling
site

Multi-circuit standards

4':

8':

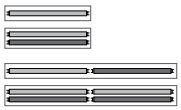

Conformed Set - May 29, 2015

TYPE L16

BELARO REFLECTOR

WEB PIN™ 110

HG ▪ BL

FR

HG

Decorative Options

Decorative Disc
(DS)

Decorative Disc
& Cradle Bars
(DR)

Decorative Ring
(RR)

Decorative Ring
& Cradle Bars
(RG)

GENERAL SPECIFICATION

Body and trim: Steel and aluminum.

Finish: Powder coated metallic silver.

Suspension: Twin aircraft cables (optional tubes).

Power cable: Silver braided.

Reflector: High purity aluminum, specular finish with vertical facets.

Upper diffuser: UV stabilized acrylic.

Decorative disc: 6mm/1/4" glass with a polished edge and a sandblasted finish.

Decorative ring: 6mm/1/4" green tint, acrylic (faux glass) with a polished edge and a sandblasted finish.

Ballasts: CFL, HPF, high frequency electronic ballasts. MH, HPF, electronic ballasts.

Drivers: Luminaires supplied with HPF electronic drivers, 120/277V. 0-10V dimming standard.
**Check with factory for availability.*

****Emergency system:** Integral emergency option provides a 1.5 hour emergency lighting facility. The self contained system includes the inverter module, NiCad batteries, LED charge indicator and test switch. Integral emergency luminaires have a 50mm/2" extended ballast housing. Not available with a 347V supply.

Mechanical: Luminaires mount to a junction box (by others).

Approvals: ETL.

MULTI-ARM
WEB PIN™ 328

© 2014 BETA-CALCO INC.
BETACALCO.COM

Conformed Set - May 29, 2015

TYPE L16

BELARO REFLECTOR LED

WEB PIN™ 110

A SPECIFY LAMP/LUMINAIRE TYPE

Code:	Source:	Color CCT	CRI:	Delivered lms*:	Efficacy LPW:	L70 @25°C (77°F):	Weight:	Height (H):	Diameter (D):	Photometry:
20 1270	30W **LED**	3000K	min 80	2020	72.1	> 50,000 hrs	9Kg/20b	520mm/13"	318mm/12.5"	File# **201270**
20 1271	30W **LED**	3500K	min 80	2165	77.3	> 50,000 hrs	9Kg/20b	520mm/13"	318mm/12.5"	File# **201271**
20 1272	30W **LED**	4000K	min 70	2339	83.5	> 50,000 hrs	9Kg/20b	520mm/13"	318mm/12.5"	File# **201272**
20 1801	57W **LED**	3000K	80	3997	70.0	> 50,000 hrs	9Kg/20b	559mm/22"	406mm/16"	File# **201801**
20 1802	57W **LED**	3500K	80	3997	70.0	> 50,000 hrs	9Kg/20b	559mm/22"	406mm/16"	File# **201802**
20 1803	57W **LED**	4000K	80	3997	70.0	> 50,000 hrs	9Kg/20b	559mm/22"	406mm/16"	File# **201803**
20 2250	85W **LED**	3000K	80	5995	70.0	> 50,000 hrs	10Kg/22b	686mm/27"	559mm/22"	File# **202250**
20 2251	85W **LED**	3500K	80	5995	70.0	> 50,000 hrs	10Kg/22b	686mm/27"	559mm/22"	File# **202251**
20 2252	85W **LED**	4000K	80	5995	70.0	> 50,000 hrs	10Kg/22b	686mm/27"	559mm/22"	File# **202252**
20 2254	115W **LED**	3000K	80	7994	70.0	> 50,000 hrs	11Kg/24b	686mm/27"	559mm/22"	File# **202254**
20 2255	115W **LED**	3500K	80	7994	70.0	> 50,000 hrs	11Kg/24b	686mm/27"	559mm/22"	File# **202255**
20 2256	115W **LED**	4000K	80	7994	70.0	> 50,000 hrs	11Kg/24b	686mm/27"	559mm/22"	File# **202256**

B SPECIFY REFLECTOR

FR Full reflector
HG Half reflector/opal diffuser

C SPECIFY OPTIONS

BL Blue diffuser
DR Decorative disc (*suspended by four cradle bars)*
DS Decorative disc *(suspended by four spacers)*
RG Decorative ring *(suspended by four cradle bars)*
RR Decorative ring *(suspended by four spacers)*

Example Specification Code: 20 1270 ▪ FR ▪ RG

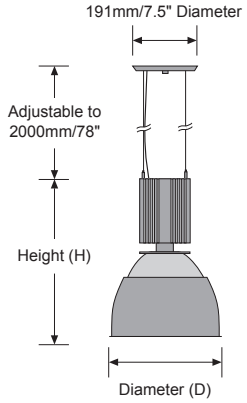

Note: *Due to constant changes in LEDs, please check our website for current product specifications.*

© 2014 BETA-CALCO INC.
BETACALCO.COM

Conformed Set - May 29, 2015

TYPE L16

BELARO REFLECTOR CFL/MH

WEB PIN™ 110

A SPECIFY LAMP/LUMINAIRE TYPE

Code:	Lamp:	Weight:	Height (H):	Diameter (D):	Photometry:
20 1211	1 x 32/42W **PL-T**	7Kg/15lb	520mm/13"	318mm/12.5"	File# **201211**
20 1212	2 x 32/42W **PL-T**	7.2Kg/16lb	520mm/13"	318mm/12.5"	File# **201212**
20 1213	1 x 70W **MH/ED17** *(coated, protected lamps only)*	7.2Kg/16lb	520mm/13"	318mm/12.5"	File# **201213**
20 1214	1 x 100W **MH/ED17** *(coated, protected lamps only)*	7.2Kg/16lb			File# **201214**
20 1731	1 x 32/42W **PL-T**	7.2Kg/16lb	559mm/22"	406mm/16"	File# **201731**
20 1732	2 x 32/42W **PL-T**	7.2Kg/16lb	559mm/22"	406mm/16"	File# **201732**
20 1733	3 x 32/42W **PL-T**	7.7Kg/17lb	559mm/22"	406mm/16"	File# **201733**
20 1739	4 x 32/42W **PL-T**	7.7Kg/17lb	559mm/22"	406mm/16"	File# **201739**
20 1737	1 x 57W **PL-T**	7.2Kg/16lb	559mm/22"	406mm/16"	File# **201737**
20 1734	1 x 70W **MH/ED17** *(coated, protected lamps only)*	7.7Kg/17lb	559mm/22"	406mm/16"	File# **201734**
20 1735	1 x 100W **MH/ED17** *(coated, protected lamps only)*	7.7Kg/17lb	559mm/22"	406mm/16"	File# **201735**
20 1736	1 x 150W **MH/ED17** *(coated, protected lamps only)*	7.7Kg/17lb	559mm/22"	406mm/16"	File# **201736**
20 2211	1 x 42W **PL-T**	7.0Kg/15lb	686mm/27"	559mm/22"	File# **202211**
20 2212	3 x 42W **PL-T**	7.2Kg/16lb	686mm/27"	559mm/22"	File# **202212**
20 2213	4 x 42W **PL-T**	7.2Kg/16lb	686mm/27"	559mm/22"	File# **202213**
20 2214	1 x 57W **PL-T**	7.2Kg/16lb	686mm/27"	559mm/22"	File# **202214**
20 2215	3 x 57W **PL-T**	7.2Kg/16lb	686mm/27"	559mm/22"	File# **202215**
20 2216	4 x 57W **PL-T**	7.2Kg/16lb	686mm/27"	559mm/22"	File# **202216**
20 2217	1 x 70W **PL-T**	7.2Kg/16lb	686mm/27"	559mm/22"	File# **202217**
20 2242	6 x 42W **PL-T**	8.5Kg/19lb	686mm/27"	559mm/22"	File# **202242**
20 2243	8 x 42W **PL-T**	9.0Kg/20lb	686mm/27"	559mm/22"	File# **202243**
20 2218	1 x 100W **MH/ED17** *(coated, protected lamps only)*	7.2Kg/16lb	686mm/27"	559mm/22"	File# **202218**
20 2219	1 x 150W **MH/ED17** *(coated, protected lamps only)*	7.2Kg/16lb	686mm/27"	559mm/22"	File# **202219**
20 2240	1 x 250W **MH/BT28** *(coated, protected lamps only)*	9.5Kg/21lb	686mm/27"	559mm/22"	File# **202240**
20 2241	1 x 400W **MH/BT28** *(coated, protected lamps only)*	11.0Kg/24lb	686mm/27"	559mm/22"	File# **202241**

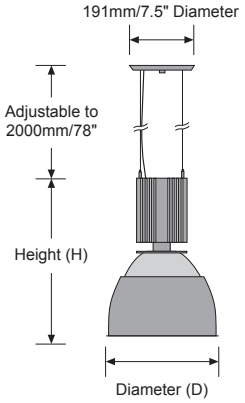

B SPECIFY REFLECTOR

FR Full reflector
HG Half reflector/opal diffuser *(PL-T only)*

C SPECIFY VOLTAGE

1 120V
2 277V
3 347V*

D SPECIFY OPTIONS

BL Blue diffuser *(PL-T lamps only)*
DB Dimming ballasts *(PL-T lamps only)*
EM Integral emergency system** *(PL-T lamps only)*
DR Decorative disc *(suspended by four cradle bars)*
DS Decorative disc *(suspended by four spacers)*
RG Decorative ring *(suspended by four cradle bars)*
RR Decorative ring *(suspended by four spacers)*
TS1 18" Tube suspension
TS2 24" Tube suspension
TS3 30" Tube suspension
TS4 36" Tube suspension

Example Specification Code: 20 2211 ▪ FR ▪ 1 ▪ RG

PL-T GX24q-4

42W - 3200lm

PL-T GX24q-5

57W - 4300lm

PL-T GX24q-6

70W - 5200lm

MH/ED17 E26/Med

100W - 9300lm
150W - 12900lm

MH/BT28 E39/Mog

250W - 22000lm
400W - 38000lm

© 2014 BETA-CALCO INC.
BETACALCO.COM

Conformed Set - May 29, 2015

Eco-Lock Advanced Clean Space Series

1x4, 2x2 and 2x4 High Efficiency LED Sources
Certified for ISO-5, 209E Class 100 Cleanspaces

TYPE L17

Project: _____
Fixture Type: _____
Cat. Number: _____
Approved By: _____

Specifications:

Housing: One piece, robotically seam welded and hole free construction. Made from 20-gauge CRS[Ω], stainless steel or aluminum. Each are only 4.5 inches tall.

Door Frame: Inset channel style 20-gauge type 304 stainless steel or aluminum hinged to housing with two stainless steel cables. Secured by captive stainless steel screws.

Gaskets: Closed cell 100% pure neoprene gasket with vulcanized corners making a one-piece oil and solvent resistant gasket system.

Lens: High durability .135" thick virgin acrylic with P12 prismatic pattern inverted. See "Options" for other choices.

LEDs: Zhaga™ replaceable LED arrays using commercially available boards warranteed for 5 years. Available in 3000, 3500 and 4000K CCT, 80 CRI, highly consistent color maintained to 3.5 SDMC. Five (5) year warranty B50/L70.

Drivers: Standard driver(s): Universal voltage (120-277 volt). LED drivers are commercially available high efficiency, HPF and dimmable with 0-10v control. Standard drivers are programable to match wattage or lumen requirements. Provided with a five (5) year warranty.

Reflector: Die formed metal with high reflectance white polyester powder coat finish. Typical reflectivity 92%.

Installation: Flanged: Adjustable toggle arm mounting standard. Seismic support wire attachment locations. Supply entry via 1/2" trade size flattened and silicone sealed knockouts. Suitable for through wiring.

Installation: Grid: Standard luminaires accommodate 1.0" & 1.5" and some 2.0" T-Bar Grid. Four seismic support adjustable grid clips also offer cable attachment point. Supply entry via 1/2" trade size flattened and silicone sealed knockouts. Suitable for through wiring.

Installation: Surface: Four .312" dia. mounting holes and a removable gasketed wiring access plate with Supply entry via 1/2" trade size flattened and silicone sealed knockouts. Suitable for through wiring.

Finish: Gloss white high reflectance 1000 hr. salt spray polyester powder coat finish standard for all housings. Stainless steel doorframes are satin polished unless option WHT is chosen.

Listings: ETL listed for wet locations. Dust and water resistance rated IP-55. Certified ISO-14644-1 classes 5 to 9 Fed. Std. 209E Class 100. Bio-Safety levels 1 & 2. Optionally rated for 85 PSI hosedown. Optionally NSF listed for non-food zone. Optionally listed for Class 1, Div. 2, Groups A, B, C & D (with "X12" suffix).

Standard	Optional
ETL c US	HOSE DOWN 85 PSI RATED
ISO 5 — ISO 14644-1 CLASS 5	NSF — C-2 NON-FOOD ZONE
IP 55 — IEC 60529	25 Year Warranty
Bio Safety Levels BSL 1 & 2	ETL c US Intertek Hazardous Location Class 1 Division 2
209E 100 — FED STD 209E CLASS 100	

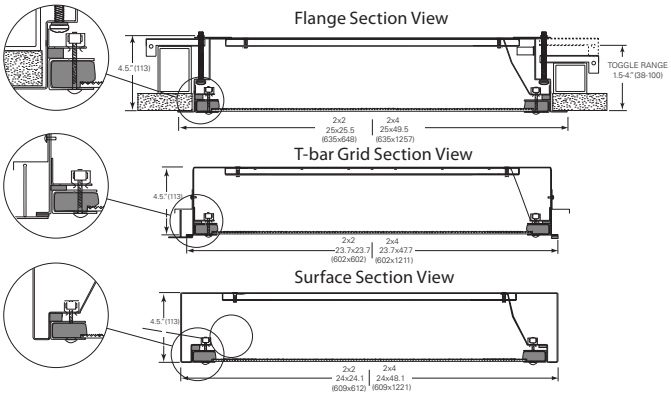

Ordering Information: (Example: *EL-F-4-1x4-2/LEDR40-UNV-FF)*

EL – Installation type – Material – Size – Qty / **LED** Power CCT – Voltage – Options

Series: *EL*

Installation Type:
- *F* = Flange
- *G* = Grid
- *S* = Surface

Material:
- *2* = CRS Hsg. & SS Door Ω
- *3* = SS Hsg. & SS Door
- *4* = AL Hsg. & SS Door
- *5* = AL Hsg. & AL Door
- *6* = CRS Hsg. & AL Door Ω

Size:
- *1x4* = 1'x4' Housing
- *2x2* = 2'x2' Housing
- *2x4* = 2'x4' Housing

Source: *LED Arrays*

Power:
- *R*=Std. Output
- *H*=High Output

CCT:
- *30*= 3000K CCT
- *35*= 3500K CCT
- *40*= 4000K CCT

Voltage:
- *120V*
- *277V*
- *347V**
- *UNV**

Source / Power / CCT:

1x4 = 1'x4' Housing
- *2/LEDRxx* = 6568 lumens, 76 watts (approx =3/32w T8 or 2/54w T5HO)
- *2/LEDHxx* =12,160 lumens, 155 watts (approx =3/32w T8 or 2/54w T5HO)

2x2 = 2'x2' Housing
- *2/LEDRxx* = 3727 lumens, 46 watts (approx = 4/17w T8 or 2/32w T8U)
- *3/LEDRxx* = 5302 lumens, 63 watts (approx = 2/40w PLL)
- *2/LEDHxx* = 5598 lumens, 78 watts (approx = 4/17w T8 or 2/32w T8U)
- *3/LEDHxx* = 8585 lumens, 117 watts (approx = 2/40w PLL)

2x4 = 2'x4' Housing
- *2/LEDRxx* = 7313 lumens, 77 watts (approx = 3/32w T8 or 3/28w T5)
- *3/LEDRxx* = 11,670 lumens, 123 watts(approx = 3/54w T5HO 6/32w T8)
- *4/LEDRxx* = 14,600 lumens, 153 watts(approx = 3/54w T5HO 6/32w T8)
- *2/LEDHxx* = 13114 lumens, 155watts (approx = 6/32w T8 or 3/54w T5HO)
- *3/LEDHxx* = 19,870 lumens, 232 watts(approx = 6/54w T5HO)

Options:
- *FF* = Fuse & Holder
- *FD* = Two Fuses & Holders
- *2/ED* = Two Drivers (Two Circuits)*
- *EM* = LED Battery Pack (1100L)*
- *WHT*= White Finished Stainless Steel Door & Hsg.
- *LEX* = .125" Prismatic Polycarbonate
- *A19*= Prismatic P19 Pattern Clear Acrylic
- *HIA*= High Impact P12 Pattern Acrylic
- *RL1*= One Laboratory Red Filtered Array**
- *YL1*= One Laboratory Amber Filtered Array**
- *TC* Prismatic (C73) Tempered Glass
- *SW* = Sealed Wireway *(contact Kurtzon for details)*
- *X12*= Listed for Class I, Division 2*
- *PxL*= Programed to User Specified Lumen Value.◊
- *PxW*= Programed to User Specified Wattage Value.◊
- † = SS Hsg. not available with 6/T5HO

* Note: Not all options are compatible with other options. Consult factory for choices & options marked "*".
Ω CRS housings are only available for Surface install type
** A Second Driver is required
◊ Replace x with Lumens or watts. Use lm/w value from chart to determine final lumens or watts when option Px is chosen.

Conformed Set - May 29, 2015

Photometrics

TYPE L17

Report # BAL17474
Source: 176 LEDs in 2 rows
CAT. #: xx-x-x-2x4-2/LEDR40-UNV

Efficacy.= 95%
Ratio S/MH: 0-180°=1.1 90-270°= 1.2
Lumens= 7313 **Watts**:77

RC	80				50			10			0
RW	70	50	30	10	50	30	10	50	30	10	0
0	119	119	119	119	111	111	111	102	102	102	100
1	109	105	101	97	98	95	92	91	89	87	85
2	100	92	85	80	86	81	77	80	77	73	71
3	91	81	73	67	76	70	65	71	67	63	61
4	84	72	63	57	68	61	56	64	58	54	52
5	77	64	56	49	61	54	48	57	52	47	45
6	71	58	49	43	55	48	43	52	46	42	40
7	66	53	44	38	51	43	38	48	42	37	35
8	62	48	40	34	46	39	34	44	38	33	32
9	58	44	36	31	43	36	31	41	35	30	29
10	54	41	33	28	40	33	28	38	32	28	26

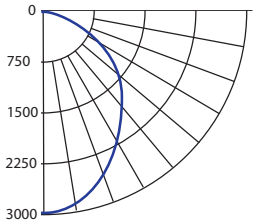

0-30	2252	30.8
0-40	3613	49.4
0-60	6051	82.7
0-90	7313	100

Report # BAL17473
Source: 264 LEDs in 3 rows
CAT. #: xx-x-x-2x4-3/LEDR40-UNV

Efficacy.= 95%
Ratio S/MH: 0-180°=1.1 90-270°= 1.2
Lumens= 11670 **Watts**:123

RC	80				50			10			0
RW	70	50	30	10	50	30	10	50	30	10	0
0	119	119	119	119	111	111	111	102	102	102	100
1	109	105	101	97	98	95	92	91	89	87	85
2	100	92	85	80	86	81	77	80	77	73	71
3	91	81	73	67	76	70	65	71	67	63	61
4	84	72	63	57	68	61	56	64	58	54	52
5	77	64	56	49	61	54	48	57	52	47	45
6	71	58	49	43	55	48	43	52	46	42	40
7	66	53	44	38	51	43	38	48	42	37	35
8	62	48	40	34	46	39	34	44	38	33	32
9	58	44	36	31	43	36	31	41	35	30	29
10	54	41	33	28	40	33	28	38	32	28	26

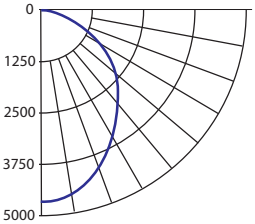

0-30	3484	29.9
0-40	5603	48
0-60	9551	81.8
0-90	11670	100

LED Fixture Performance

Size	Power	Number of Arrays	Input Watts	Delivered Lumens	Efficacy lm/w	T8 Equal	T5HO Equal	IES Report
1x4	Standard	1	46	3284	71.4	2-32w	1-54w	17477.1
1x4	Standard	2	76	6568	85.7	3-32w	2-54w	17477
1x4	H.O.	2	155	12160	85.7	6-32w	3-54w	18192
2x2	Standard	2	46.2	3727	80.6	2-31w	2-24w	17476
2x2	Standard	3	63.7	5308	83.2	3-31w	3-24w	17475
2x2	H.O.	3	117	8585	73.4	4-F40BX	6-24w	18190
2x4	Standard	2	76.7	7313	95.3	3-32w	2-54w	17474
2x4	Standard	3	123	11670	94.7	6-32w	3-54w	17473
2x4	Standard	4	153	14600	94	6-32w	4-54w	17473.1
2x4	H.O.	3	232	19870	85.6	-	6-54w	18191

Values above represent typical performance for standard fixtures with prismatic acrylic lens. For exact performances values refer to LM-79 reports.

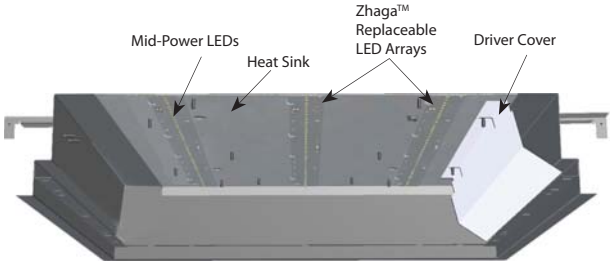

(Flanged fixture shown)

Dimming

Recommended Models

Manufacturer	Model
Encelium	Encelium ECS Control system, DSC-500, MYC-RS-500
Hubbell Building Automation	DLC-7, Omni, Light Owl, Light Hawk, UVPP
Hunt Dimming	PS, FD and SSD Simplicity Series
Leviton	Centura, Wallbox IllumaTech, PE400-D
Philips	Sunrise Preset, Momentum Preset, Vega Slider, Lytemode Module
Watt Stopper, inc	LS IRT, W, WT, CI CX, DT,IRC, Lightsaver, PW, UW TS, CB, UT

Other models designed for 0-10v dc control may be compatable. Consult your dimmer manufacturer for details.

Grid System Compatibility

NEMA LE-4 for type G grid systems.

Manufacturer	Model Compatible with the standard fxiture	Models Requiring non-standard Fixtures
Gordon	LG-10, LG-15 LR-15	LG-20, DS-20, WG-20, WS-20
Armstrong	EA7900, EA7901, EA7903	
Clestra	PS, FD and SSD Simplicity	
M+W Group		UFR-55/70L-T, 55/100L
Price	HDCR Series, 4818, 4823	
Cleanrooms International	148185, 148186,148187	148015, 147780,
Other Typical Systems	15/16", 1" and 1.5"	2", 300x600, 300x1200, 600x1200 metric grid.

Most grid systems larger than 2 inches width or taller than 1.6 inches require either special spacing or special fixures. Consult factory for compatibility or download BIM/Revit™ files from our website. Please verify fit before ordering.

Specifications:

Detailed Specification:

A one-piece seam welded housing, polyester powder coated after fabrication. Channel doorframe secured by captive stainless steel flush philips head screws.with over-torque protection and hinged by stainless steel aircraft cables. Pure Neoprene gaskets seal the lens to the door, the door to the housing and the housing to the ceiling structure. Supply entrances and knockouts are internally silicone sealed. Lens is .135 thick virgin acrylic with inverted prisms. LEDs are located on Zhaga compliant boards. Drivers and boards are commercially available, field replaceable. Rated/Listed ETL wet locations, IP-55, Cleanroom ISO-5 to 8. 25 year warranty.

Abbreviated Specification:

One-piece seam welded housing, polyester powder coated after fabrication. Channel doorframe secured by captive stainless steel flush screws and hinged by stainless steel aircraft cables. Triple gasketed and sealed knockouts. Driver and LED boards are commercially available, field replaceable. Rated/Listed ETL wet locations, IP-55, Cleanroom ISO-5.

Concice Performance Specification:

Triple gasketed cleanroom troffer. Minimum 80 lumens per watt. Zhaga LEDs and commercially available driver. Rated/Listed UL or ETL wet locations, IP-55, Cleanroom ISO-5.

Flanged

For Drywall, Plaster Ceilings

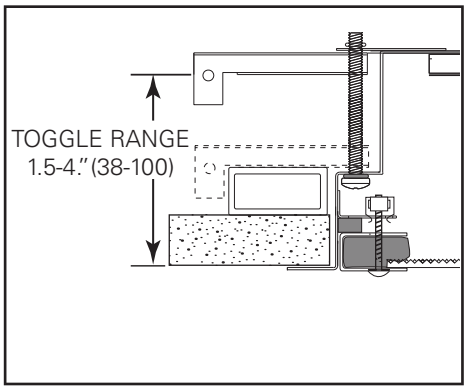

Grid

For 15/16, 1" and 1.5"

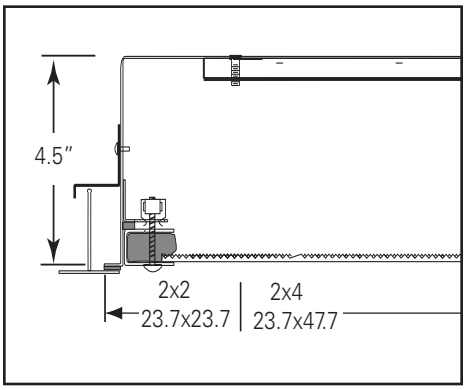

Related Links:

Flanged Installation Instructions
Grid Installation Instructions
Surface Installation Instructions
Cleanroom Construction & Lighting

KURTZON
THE FUTURE OF LIGHTING
SPECIFICATION GRADE

Conformed Set - May 29, 2015

Kurtzon Lighting
1420 S. Talman Ave.
Chicago, IL 60608
1-800-837-8937

LED

TYPE L18 Series

FINELITE

High Performance 4" Aperture (HP-4) - Recessed

Date	
Project	
Type	
Comments	

DESCRIPTION

High Performance 4" aperture recessed (HP-4 R) is a patent pending linear LED luminaire for offices, schools, retail and healthcare facilities. HP-4 R is the first recessed linear LED luminaire to feature On-Grid™ mounting for standard lengths, making installation quick and easy. Advanced optical designs and mid-powered LEDs deliver an efficient, long-lasting luminaire free of glare and socket shadows for continuous lighting applications. HP-4 R accommodates grid and drywall ceilings. 90º corners are available for ceiling and wall-to-ceiling applications. HP-4 R is RoHS compliant. IC Rated.

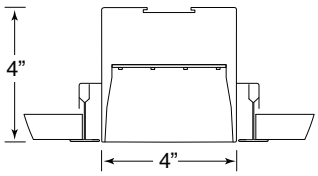

Flush Diffuser

DIMENSIONS & LIGHT ENGINE

A glare-free experience is attained with mid-powered LEDs properly distributed and paired with a precise diffuser to eliminate pixilation. Diffusers up to 12' in length.

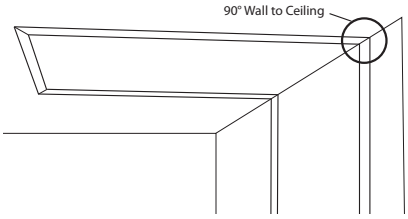

MITERED ANGLES

Illuminated 90º corners and wall-to-ceiling configuration are seamless without socket shadows. Custom angles are available. (90º minimum on inside corners). Contact factory.

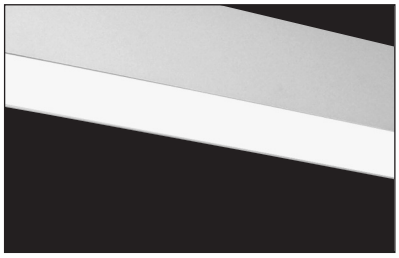

SEAMLESS ILLUMINATION

The optical design features seamless lenses up to 12’ in length and eliminates socket shadows at joints and corners.

ORDERING GUIDE

Sample Number: HP-4 R - 32' - S0 - 3500K - 120V - SC - C1 - OBO

HP-4 R [ ] [ ] [ ] [ ] [ ] [ ] [ ]

Finelite **Series HP-4 R**
Size (4', 8', 12' Multiples Standard)
Light Engine (SO - Standard Output, HO - High Output)
LED Color Temperature (3000K, 3500K, 4000K)
Voltage (120V, 277V)
Circuiting (SC - Single Circuit, MC - Multi-Circuit)
Mounting (C1 - 1" T-Bar, C2 - 9/16" T-Bar, C3 - Screw Slot, C3F - Flush Screw Slot, VF - Visible Flange, C2T - 9/16" Tegular, C1T - 1" Tegular, SF - Spackle Flange, TZ6 - Tech Zone 6”)
Intergrated Sensor (OBO - Occupancy Sensor, OBD - Daylight, OBB - Both)

Protected by one or more US patents: D702,391; D702,390; D700,732

Finelite, Inc. • 30500 Whipple Road • Union City, CA 94587-1530 • 510 / 441-1100 • Fax: 510 / 441-1510 • www.finelite.com

Due to continuing product improvements, Finelite reserves the right to change specifications without notice. Please visit www.finelite.com for most current data.

Conformed Set - May 29, 2015

© 2014 FINELITE, INC. ALL RIGHTS RESERVED. Form CTK0075. 12/14

FINELITE

High Performance 4" Aperture (HP-4) - Recessed

PHOTOMETRY

Standard Output
Efficacy (Lumen per watt): 79.9
Total luminaire output: 1447 Lumens (362 lumens/foot)
18 Watts (4.5 watts/foot)

CRI: 83
R9: 10
CCT: 4000K
ITL LM79 Report 74686

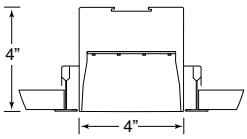

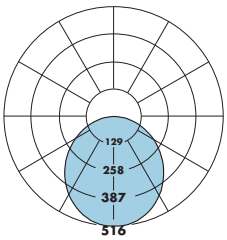

— Refer to www.finelite.com for additional photometry and product information.

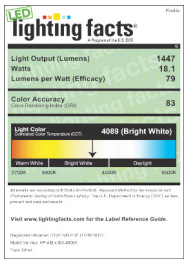

CANDLEPOWER SUMMARY

	0.0	22.5	45	67.5	90	Flux
0	514	514	514	514	514	
5	514	511	511	511	513	49
15	493	492	492	491	492	139
25	453	492	492	491	492	139
35	397	397	395	395	394	247
45	331	330	328	328	326	254
55	255	256	256	255	251	228
65	179	179	180	178	174	177
75	103	103	104	102	99	109
85	33	33	34	34	33	37
90	0	2	4	5	6	

PHOTOMETRY

High Output
Efficacy (Lumen per watt): 74.6
Total luminaire output: 2754 Lumens (689 lumens/foot)
37 Watts (9.2 watts/foot)

CRI: 83
R9: 10
CCT: 4000K
ITL LM79 Report 74687

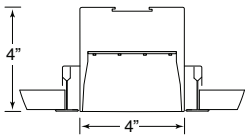

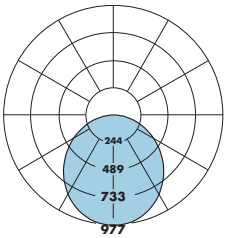

— Refer to www.finelite.com for additional photometry and product information.

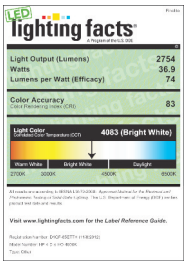

CANDLEPOWER SUMMARY

	0.0	22.5	45	67.5	90	Flux
0	973	973	973	973	973	
5	974	969	968	969	972	92
15	936	932	931	932	934	263
25	860	859	855	856	858	395
35	754	755	750	751	751	470
45	628	629	625	625	623	483
55	487	489	488	486	481	435
65	341	342	343	340	334	337
75	199	198	198	194	190	208
85	65	64	64	63	61	70
90	0	4	6	8	8	

PHOTOMETRY

Standard Output
Efficacy (Lumen per watt): 74
Total luminaire output: 1348 Lumens (337 lumens/foot)
18 Watts (4.5 watts/foot)

CRI: 84
R9: 14
CCT: 3500K
ITL LM79 Report 74684

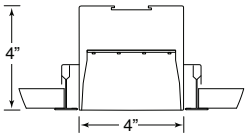

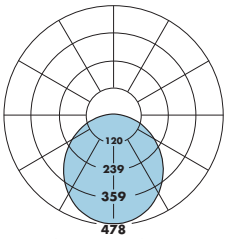

— Refer to www.finelite.com for additional photometry and product information.

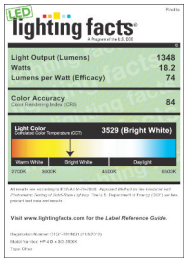

CANDLEPOWER SUMMARY

	0.0	22.5	45	67.5	90	Flux
0	476	476	476	476	476	
5	476	474	473	473	475	45
15	457	456	455	455	456	129
25	420	422	418	418	419	193
35	368	369	367	367	367	230
45	308	307	306	306	304	236
55	238	239	238	238	235	213
65	167	167	168	166	163	165
75	97	97	97	96	94	102
85	32	31	32	32	32	35
90	0	2	4	5	6	

PHOTOMETRY

High Output
Efficacy (Lumen per watt): 70.5
Total luminaire output: 2622 Lumens (656 lumens/foot)
37 Watts (9.2 watts/foot)

CRI: 84
R9: 16
CCT: 3500K
ITL LM79 Report 74685

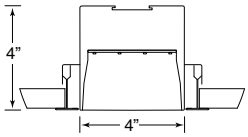

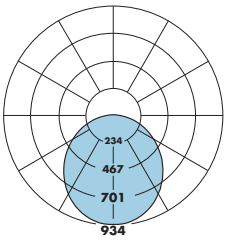

— Refer to www.finelite.com for additional photometry and product information.

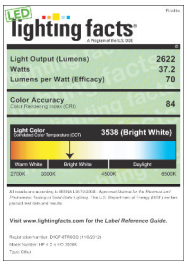

CANDLEPOWER SUMMARY

	0.0	22.5	45	67.5	90	Flux
0	930	930	930	930	930	
5	930	926	925	925	928	88
15	893	890	889	890	891	251
25	820	821	816	816	817	377
35	719	719	714	715	714	448
45	598	598	595	595	592	460
55	463	464	463	462	456	413
65	325	325	326	323	317	320
75	188	188	189	186	181	198
85	61	61	62	62	60	67
90	0	2	5	6	7	

Consult www.finelite.com for 3000K photometric reports.

Protected by one or more US patents: D702,391; D702,390; D700,732

Finelite, Inc. • 30500 Whipple Road • Union City, CA 94587-1530 • 510 / 441-1100 • Fax: 510 / 441-1510 • www.finelite.com

Due to continuing product improvements, Finelite reserves the right to change specifications without notice. Please visit www.finelite.com for most current data.

Conformed Set - May 29, 2015

© 2014 FINELITE, INC. ALL RIGHTS RESERVED. Form CTK0075. 12/14

LED

BUY AMERICAN ACT

TYPE L18 Series

FINELITE

High Performance 4" Aperture (HP-4) - Recessed

SPECIFICATIONS

CONSTRUCTION: Precision cut 6061-T6 extruded aluminum body. Internal joiner system, plug-together wiring standard. Housing is powder coated.

ENDCAPS: Flat endcap at each end of run adds 0.05" to overall length.

REFLECTORS: Die-formed 20-gauge cold-rolled steel reflectors are finished in 96 LG high reflectance matte white powder coat paint.

DIFFUSER: Frost white snap-in lens, 73% transmissive, 99% diffusion.

LIGHT ENGINE: Available in two lumen packages - High Output and Standard Output. **High Output (HO):** 4ft 3000K delivers 639 lumens per foot (37.4W per 4' luminaire). **Standard Output (SO)**: 4ft LED 3000K delivers 329 lumens per foot (17.8W per 4' luminaire). **High Output (HO):** 4ft 3500K delivers 656 lumens per foot (37.2W per 4' luminaire). **Standard Output (SO)**: 4ft LED 3500K delivers 337 lumens per foot (18.2W per 4' luminaire). **High Output (HO)**: 4ft 4000K delivers 689 lumens per foot (36.9W per 4' luminaire). **Standard Output (SO)**: 4ft LED 4000K delivers 362 lumens per foot (18.1W per 4' luminaire). Light engine is made up of high performance mid-powered LEDs and is designed to distribute heat properly to maximize the life of the LED.

LED COLOR TEMPERATURE: Available in 3000K, 3500K, and 4000K. **CRI:** *3000K* - 87-HO, 87-SO, *3500K* - 84-HO, 84-SO, *4000K* - 83-HO, 83-SO. **R9:** *3000K* - 33-HO, 34-SO, *3500K* - 16-HO, 14-SO, *4000K* - 10-HO, 10-SO.

DRIVER: High performance constant current reduction LED driver. Driver is fully accessible from below the ceiling. *120/277V. Power Factor = **(3000K)** 95.6%-HO, 86.2%-SO, **(3500K)** 97.5%-HO, 97.8%-SO, **(4000K)** 97.6%-HO, 97.9%-SO. Total harmonic distortion (THD) <20%. Input current: **3000K** HO=0.325A, SO=0.172A. **3500K** HO=0.317A, SO=0.155A. **4000K** HO=0.315A, SO=0.154A. Lutron driver options: Lut3W- 3-wire driver, LutES EcoSystem driver, Lut2W - 2-wire driver.
*Driver is wired for dimming or non-dimming. Dimming is compatible with 0-10v controls with a range of 100-10%.

LUMEN MAINTENANCE: HP-4 R is rated to deliver 90% lumen maintenance (L90) to 100,000 hours and 70% lumen maintenance (L70) to 168,000 hours.

ELECTRICAL: 120V or 277V prewired. Emergency to generator/inverter wiring, internal generator transfer switch, nightlight wiring, battery backup.= Low profile battery backup available. Battery backup delivers 1300 lumens. Minimum fixture length for battery Pack: 8'.

Daylight Sensor Occupancy Sensor

INTEGRATED SENSORS: HP-4 LED can be specified with integrated PIR (Passive Infared) occupancy sensors or daylight sensors. Refer to Occupancy Sensor and Daylight Sensor tech sheets for more info.

MOUNTING: Standard bracket design works with most lay-in ceiling types. Brackets secure luminaire to ceiling grid from above. Tie-in T-Bar brackets. Connect luminaire to T-Bar for securing to structure. Consult local code for appropriate tie-wire recommendations.

FEED: Standard with (5) 18 gauge wires. 14 gauge wires used when fixture current exceeds 5 amps. Optional 6' flex conduit whips available.

LENGTHS: Standard 4', 8', and 12' section lengths can be combined to make longer runs. Contact factory for lengths in increments of 1' or down to the 1/16 an inch.

WEIGHT: Fixture weight = 2.8 lb/ft.

LABELS: Fixture and electrical components are ETL listed conforming to UL 1598 in the U.S.A., and Canada; ETL listed to certified CAN/CSA C22.2 No. 250.0. In accordance with NEC Code 410.73 (G), this luminaire contains an internal driver disconnect. IC-Rated.

WARRANTY: HP-4 R comes standard with a 10-year warranty on all standard components. Optional accessories such as emergency battery packs are covered by their individual manufacturer warranties.

MOUNTING TYPES:

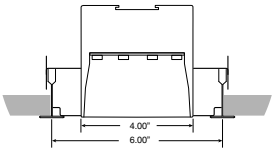

Tech Zone (TZ6)

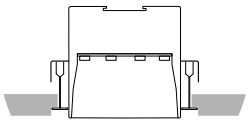
9/16" Tegular (C2T)

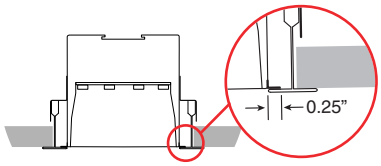

1" T-Bar (C1)

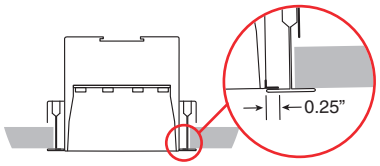

9/16" T-Bar (C2)

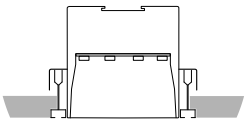
Flush Screw Slot (C3F)

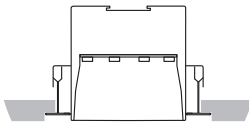
1" Tegular (C1T)

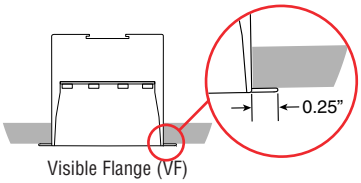

Visible Flange (VF)

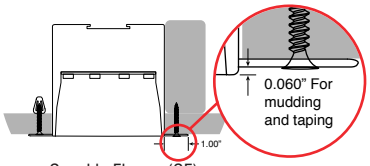

Spackle Flange (SF)

Housing With Extruded Flange (V1)

Ceiling Options
C1, C2, C3, VF

Housing Without Extruded Flange (V2)
Ceiling Hardware Attached

Ceiling Options
C1T, C2T, C3F, SF, TZ6

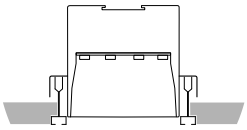
Standard Screw Slot (C3)

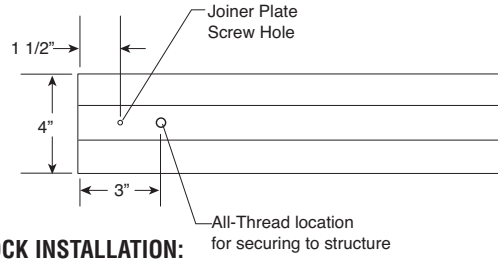

SHEET ROCK INSTALLATION:
Flex conduit is secured to top of fixture. Support to structure using All-Thread. All-Thread support holes are located on each end of the fixture.

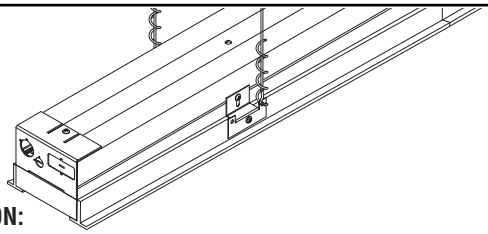

T-BAR INSTALLATION:
HP-4 R for T-Bar installations comes standard with a splice plate at the end of the luminaire. Mounting brackets (supplied) secure the fixture to T-Bar and provide support to structure location. All starter/independent fixtures are 11/16" shorter than nominal. All joiner/ender fixture are normal length.

Protected by one or more US patents: D702,391; D702,390; D700,732

Finelite, Inc. • 30500 Whipple Road • Union City, CA 94587-1530 • 510 / 441-1100 • Fax: 510 / 441-1510 • www.finelite.com

Conformed Set - May 29, 2015

Due to continuing product improvements, Finelite reserves the right to change specifications without notice. Please visit www.finelite.com for most current data.

© 2014 FINELITE, INC. ALL RIGHTS RESERVED. Form CTK0075. 12/14

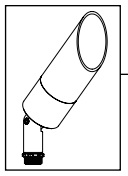

BKSSL SOLID STATE LIGHTING

the power of dimming with adjust-e-lume® TECHNOLOGY

TYPE LX1

DELTA STAR™

PROJECT:	
TYPE:	
CATALOG NUMBER:	
SOURCE:	
NOTES:	

CATALOG NUMBER LOGIC

		DS	LED								
Example	- DS	- LED	- e22	- SP	- A7	- BZW	- 12	- 11	- A	- 360SL	

Material
- **Blank** - Aluminum
- **B** - Brass
- **S** - Stainless Steel

Series
- **DS** - Delta Star™

Source
- **LED** - **'e'** Technology with Integral Dimming Driver (25W min. load when dimmed)
  **Requires magnetic Low Voltage dimmer*

LED Type
- **e36** - 8WLED/2.7K
- **e22** - 8WLED/3K
- **e23** - 8WLED/4K
- **e27** - 8WLED/Amber

Optics*
- **NSP** - Narrow Spot (Red Indicator)
- **SP** - Spot (Green Indicator)
- **MFL** - Medium Flood (Yellow Indicator)
- **WFL** - Wide Flood (Blue Indicator)

Adjust-e-Lume® Output Intensity** *(Choose factory setting)*

A9 (Standard)**, A8, A7, A6, A5, A4, A3, A2, A1**

***Please see Adjust-e-Lume® photometry to determine desired intensity.*

Finish

Aluminum Finish

Powder Coat Color	Satin	Wrinkle
Bronze	BZP	BZW
Black	BLP	BLW
White (Gloss)	WHP	WHW
Aluminum	SAP	—
Verde	—	VER

Brass Finish

Machined	MAC
Polished	POL
Mitique™	MIT

Stainless Finish

Machined	MAC
Polished	POL
Brushed	BRU *Interior use only.*

Premium Finish

ABP	Antique Brass Powder	CMG	Cascade Mountain Granite	RMG	Rocky Mountain Granite
AMG	Aleutian Mountain Granite	CRI	Cracked Ice	SDS	Sonoran Desert Sandstone
AQW	Antique White	CRM	Cream	SMG	Sierra Mountain Granite
BCM	Black Chrome	HUG	Hunter Green	TXF	Textured Forest
BGE	Beige	MDS	Mojave Desert Sandstone	WCP	Weathered Copper
BPP	Brown Patina Powder	NBP	Natural Brass Powder	WIR	Weathered Iron
CAP	Clear Anodized Powder	OCP	Old Copper	*Also available in RAL Finishes See submittal SUB-1439-00*	

Lens Type
- **12** - Soft Focus Lens
- **13** - Rectilinear Lens

Shielding
- **11** - Honeycomb Baffle

Cap Style
- **A** - 45°
- **B** - 90°
- **D** - 45° less Weep Hole *(Interior Use Only)*
- **E** - 90° less Weep Hole *(Interior Use Only)*

Option
- **360SL** - 360SL™ Rotational Knuckle Mounting System

DRIVER DATA

Input Volts	InRush Current	Dimmable	Operation Ambient Temperature
12VAC/DC 50/60Hz	<1A (non-dimmed)	Magnetic Low Voltage Dimmer	-10°F-130°F

LM79 DATA

BK No.	CCT (Typ.)	Input Watts (Typ.)	CRI (Typ.)
e36	2700K	8.4	90
e22	3100K	8.4	90
e23	4100K	8.4	75
e27	Amber (590nm)	7.9	~

L70 DATA

Minimum Rated Life (hrs.) 70% of initial lumens (L_{70})
50,000
50,000
50,000
50,000

*OPTICAL DATA

Beam Type	Angle	Visual Indicator
Narrow Spot	14°	Red Dot
Spot	18°	Green Dot
Medium Flood	25°	Yellow Dot
Wide Flood	36°	Blue Dot

B-K LIGHTING

40429 Brickyard Drive • Madera, CA 93636 • USA
559.438.5800 • FAX 559.438.5900
www.bklighting.com • info@bklighting.com

SUBMITTAL DATE	DRAWING NUMBER
1-8-14	SUB000930

THIS DOCUMENT CONTAINS PROPRIETARY INFORMATION OF B-K LIGHTING, INC. AND ITS RECEIPT OR POSSESSION DOES NOT CONVEY ANY RIGHTS TO REPRODUCE, DISCLOSE ITS CONTENTS, OR TO MANUFACTURE, USE OR SELL ANYTHING IT MAY DESCRIBE. REPRODUCTION, DISCLOSURE OR USE WITHOUT SPECIFIC WRITTEN AUTHORIZATION OF B-K LIGHTING, INC. IS STRICTLY PROHIBITED.

Conformed Set - May 29, 2015

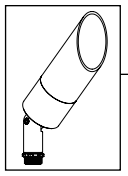

BKSSL SOLID STATE LIGHTING

the power of dimming with adjust-e-lume® TECHNOLOGY

TYPE LX1

DELTA STAR™

PROJECT:	
TYPE:	

"A/D" CAP

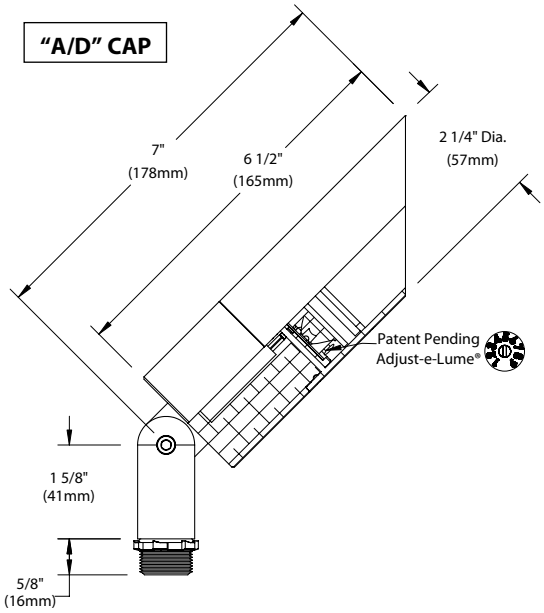

"B/E" CAP

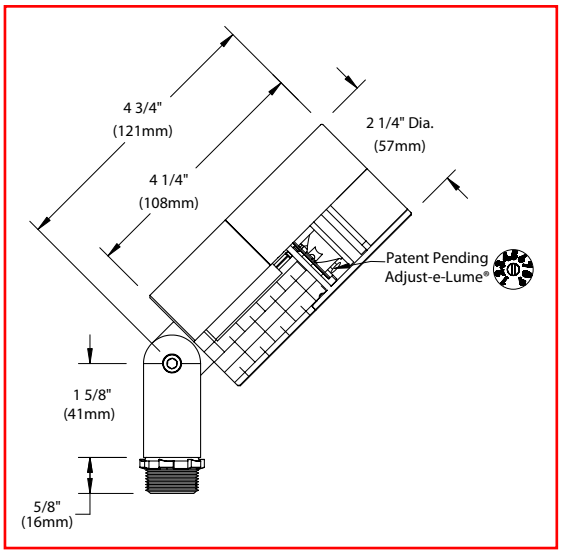

360 SL™

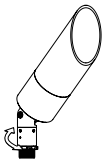

Horizontal Rotation
(Optional 360SL™ Knuckle)

Accessories *(Configure separately)*

All dimensions indicated on this submittal are nominal.
Contact Technical Sales if you require more stringent specifications.

Mounting:

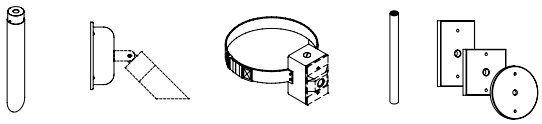

Power Pipe™ | Power Canopy™ | Tree Strap™ | Stems | Canopies | UPM™

Remote Transformers:

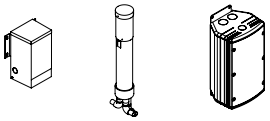

TR Series | Power Pipe™ | UPMRM™

SPECIFICATIONS

GreenSource Initiative™
Metal and packaging components are made from recycled materials. Manufactured using renewable solar energy, produced onsite. Returnable to manufacturer at end of life to ensure cradle-to-cradle handling. Packaging contains no chlorofluorocarbons (CFC's). Use of this product may qualify for GreenSource efficacy and recycling rebate(s). Consult www.bklighting.com/greensource for program requirements.

Materials
Furnished in Copper-Free Aluminum (Type 6061-T6), Brass (Type 360) or Stainless Steel (Type 304).

Body
Fully machined from solid billet. Unibody design provides enclosed, water-proof wireway and integral heat sink for maximum component life. Integral knuckle for maximum mechanical strength. High temperature, silicone 'O' Ring provides water-tight seal.

Knuckle
The LOCK™ (Locking 'O' Ring Compression Knuckle) is comprised of two components. The first is integral to the body and features an interior, machined taper. The second is machined from solid billet and features a second, reverse angle taper. The resultant mechanical taper-lock allows a full 180° vertical adjustment without the use of serrated teeth, which inherently limit aiming. High temperature, silicone 'O' Ring provides water-tight seal and compressive resistance to maintain fixture position. Design withstands 73 lb. static load prior to movement to ensure decades of optical alignment. ½" pipe thread for mounting.

Optional 360SL™ additionally provides biaxial source control with 360° horizontal rotation in addition to vertical adjustment.

Cap
Fully machined. Accommodates [1] lens or louver media. Choose from 45° cutoff ('A' or 'D'), or 1" deep bezel with 90° cutoff ('B' or 'E') cap styles. 'A' and 'B' caps include weep-hole for water and debris drainage. 'D' and 'E' caps exclude weep-hole and are for interior use only.

Lens
Shock resistant, tempered, glass lens is factory adhered to fixture cap and provides hermetically sealed optical compartment. Specify soft focus (#12) or rectilinear (#13) lens.

BKSSL®
Integrated solid state system with 'e' technology is scalable for field upgrade. Modular design with electrical quick disconnects permit field maintenance. High power, forward throw source complies with ANSI C78.377 binning requirements. Exceeds ENERGY STAR® lumen maintenance requirements. LM-80 certified components.

Integral, constant current driver. 12VAC/VDC input. 50/60Hz. Proprietary input control scheme achieves power factor correction and eliminates inrush current. Output, over-voltage, open-circuit, and short circuit protected. Inrush current limited to <1A (non-dimming). Conforms to Safety Std. C22.2 No. 250.13-12.

Line dimmable. For use with low voltage dimmer with dedicated neutral conductor. Minimum 25 watt load required for dimming.

Adjust-e-Lume® (Pat. Pending)
Integral electronics allows dynamic lumen response at the individual fixture. Indexed (100% to 25% nom.) lumen output. Maintains output at desired level or may be changed as conditions require. Specify factory preset *output intensity.*

Optics
Interchangeable OPTIKIT™ modules permit field changes to optical distribution. Color-coded for easy reference: Narrow Spot (NSP) = Red. Spot (SP) = Green. Medium Flood (MFL) = Yellow. Wide Flood (WFL) = Blue.

Remote Transformer
For use with 12VAC BKSSL remote transformer.

Wiring
Teflon® coated, 18AWG, 600V, 250° C rated and certified to UL 1659 standard.

Hardware
Tamper-resistant, stainless steel hardware. LOCK™ aiming screw is additionally black oxide treated for additional corrosion resistance.

Finish
StarGuard®, our exclusive RoHs compliant, 15 stage chromate-free process cleans and conversion coats aluminum components prior to application of Class 'A' TGIC polyester powder coating. Brass components are available in powder coat or handcrafted metal finish. Stainless steel components are available in handcrafted metal finish. (Brushed finish for interior use only).

Warranty
5 year limited warranty.

Certification and Listing
ITL tested to IESNA LM-79. Lighting Facts Registration per USDOE (www.lightingfacts.com). ETL Listed to ANSI/UL Standard 1838 and UL Standard 8750. Certified to CAN/CSA Standard C22.2 No. 9, CSA TIL B-58B. RoHs compliant. Suitable for indoor or outdoor use. Suitable for use in wet locations. Suitable for installation within 4' of the ground. IP66 Rated. Made in USA.

Intertek | MADE IN THE USA | lighting facts | RoHS

**Teflon is a registered trademark of DuPont Corporation.*
**Energy Star is a registered trademark of the United States Environmental Protection Agency.*

adjust-e-lume® TECHNOLOGY

Photometry for use with e36 **2.7K**

Select OptiKit™ for desired distribution

RED	Narrow Spot (NSP)
GREEN	Spot (SP)
YELLOW	Medium Flood (MFL)
BLUE	Wide Flood (WFL)

Set adjust-e-lume™ Dial to desired output

Narrow Spot

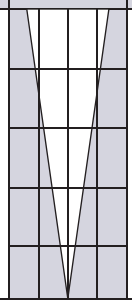

Distance from lamp	Adjust-e-Lume™ Setting 1	2	3	4	5	6	7	8	9
20'	2.4	3.1	5.0	6.3	7.6	8.9	9.2	9.3	9.3
16'	3.8	4.9	7.9	9.9	11.9	13.9	14.3	14.6	14.6
12'	6.7	8.6	14.0	17.6	21.2	24.7	25.5	25.9	25.9
8'	15.1	19.4	31.4	39.7	47.6	55.5	57.3	58.3	58.3
4'	60.4	77.7	125.8	158.6	190.4	222.1	229.2	233.0	233.2

4' 2' 0' 2' 4'

Note: If using No. 11 honeycomb baffle multiply footcandle values by .80

Spot

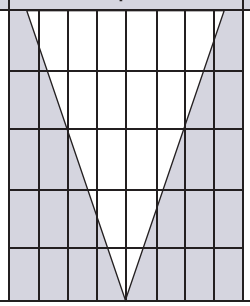

Distance from lamp	Adjust-e-Lume™ Setting 1	2	3	4	5	6	7	8	9
20'	1.6	2.1	3.3	4.3	5.3	5.9	6.1	6.3	6.3
16'	2.6	3.3	5.2	6.7	8.2	9.3	9.6	9.8	9.9
12'	4.5	5.8	9.3	12.0	14.7	16.5	17.0	17.5	17.5
8'	10.2	13.0	20.9	26.9	33.0	37.0	38.3	39.4	39.4
4'	40.9	52.1	83.4	107.8	131.9	148.1	153.1	157.5	157.8

8' 6' 4' 2' 0' 2' 4' 6' 8'

Note: If using No. 11 honeycomb baffle multiply footcandle values by .80

Medium Flood

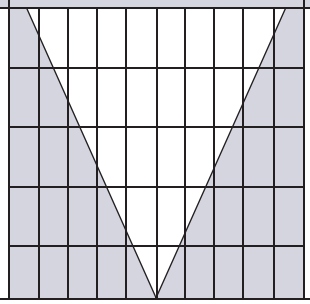

Distance from lamp	Adjust-e-Lume™ Setting 1	2	3	4	5	6	7	8	9
20'	0.9	1.3	2.0	2.5	3.1	3.4	3.6	3.6	3.6
16'	1.5	2.0	3.1	3.9	4.8	5.4	5.6	5.6	5.7
12'	2.6	3.6	5.5	6.9	8.6	9.5	9.9	9.9	10.1
8'	5.9	8.0	12.3	15.5	19.3	21.5	22.2	22.4	22.6
4'	23.6	32.1	49.3	62.2	77.1	85.8	88.9	89.5	90.5

10' 8' 6' 4' 2' 0' 2' 4' 6' 8' 10'

Note: If using No. 11 honeycomb baffle multiply footcandle values by .80

Wide Flood

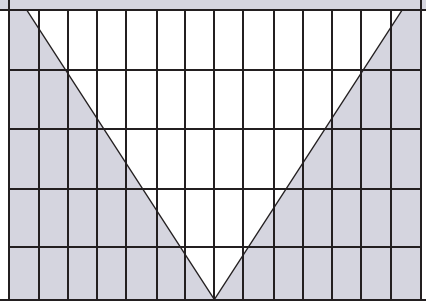

Distance from lamp	Adjust-e-Lume™ Setting 1	2	3	4	5	6	7	8	9
20'	0.4	0.6	0.9	1.1	1.4	1.6	1.6	1.7	1.7
16'	0.7	0.9	1.4	1.8	2.1	2.5	2.6	2.6	2.6
12'	1.2	1.6	2.5	3.2	3.8	4.4	4.6	4.7	4.7
8'	2.7	3.7	5.6	7.2	8.6	10.0	10.3	10.5	10.6
4'	10.9	14.8	22.3	28.6	34.3	39.9	41.1	42.2	42.3

14' 12' 10' 8' 6' 4' 2' 0' 2' 4' 6' 8' 10' 12' 14'

Note: If using No. 11 honeycomb baffle multiply footcandle values by .80

Select OptiKit™ for desired distribution

RED	Narrow Spot (NSP)
GREEN	Spot (SP)
YELLOW	Medium Flood (MFL)
BLUE	Wide Flood (WFL)

Set adjust-e-lume™ Dial to desired output

Narrow Spot

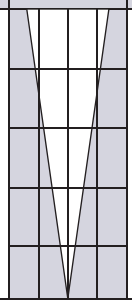

Distance from lamp	Adjust-e-Lume™ Setting 1	2	3	4	5	6	7	8	9
20'	2.4	2.9	4.9	6.1	7.3	8.8	9.1	9.3	9.3
16'	3.8	4.6	7.6	9.6	11.4	13.8	14.3	14.5	14.6
12'	6.7	8.2	13.5	17.0	20.3	24.5	25.4	25.7	25.9
8'	15.1	18.4	30.3	38.2	45.8	55.2	57.0	57.9	58.2
4'	60.3	73.6	121.3	152.8	183.1	220.9	228.2	231.6	232.8

Note: If using No. 11 honeycomb baffle multiply footcandle values by .80

Spot

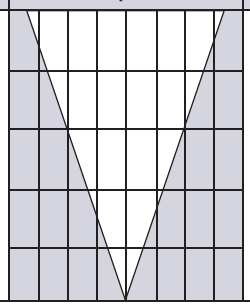

Distance from lamp	Adjust-e-Lume™ Setting 1	2	3	4	5	6	7	8	9
20'	1.6	2.1	3.1	4.1	4.9	6.0	6.1	6.2	6.3
16'	2.5	3.3	4.9	6.4	7.6	9.3	9.6	9.8	9.9
12'	4.5	5.9	8.7	11.4	13.5	16.6	17.0	17.3	17.5
8'	10.2	13.2	19.5	25.6	30.5	37.3	38.3	39.0	39.4
4'	40.6	52.7	78.1	102.3	121.9	149.1	153.1	156.0	157.8

Note: If using No. 11 honeycomb baffle multiply footcandle values by .80

Medium Flood

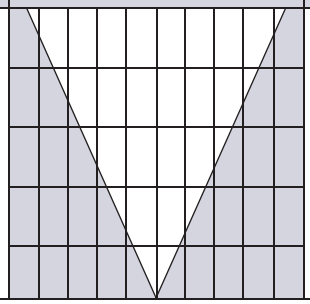

Distance from lamp	Adjust-e-Lume™ Setting 1	2	3	4	5	6	7	8	9
20'	1.0	1.2	1.9	2.4	2.9	3.4	3.5	3.6	3.7
16'	1.5	1.8	2.9	3.8	4.6	5.3	5.4	5.7	5.8
12'	2.6	3.3	5.2	6.7	8.1	9.5	9.6	10.1	10.2
8'	6.0	7.4	11.8	15.0	18.3	21.3	21.6	22.8	23.0
4'	23.8	29.5	47.0	60.2	73.3	85.1	86.4	91.2	92.2

Note: If using No. 11 honeycomb baffle multiply footcandle values by .80

Wide Flood

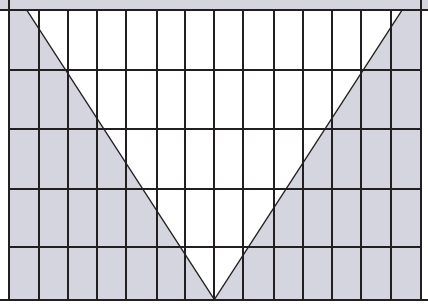

Distance from lamp	Adjust-e-Lume™ Setting 1	2	3	4	5	6	7	8	9
20'	0.4	0.5	0.9	1.1	1.3	1.6	1.7	1.7	1.7
16'	0.7	0.8	1.4	1.7	2.0	2.4	2.6	2.7	2.7
12'	1.2	1.5	2.5	3.0	3.5	4.3	4.7	4.7	4.7
8'	2.8	3.4	5.5	6.7	7.9	9.8	10.5	10.7	10.7
4'	11.1	13.4	22.2	26.8	31.7	39.0	41.9	42.6	42.7

Note: If using No. 11 honeycomb baffle multiply footcandle values by .80

Select OptiKit™ for desired distribution

RED	Narrow Spot (NSP)
GREEN	Spot (SP)
YELLOW	Medium Flood (MFL)
BLUE	Wide Flood (WFL)

Set adjust-e-lume™ Dial to desired output

Narrow Spot

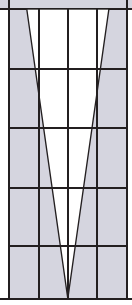

Distance from lamp	Adjust-e-Lume™ Setting 1	2	3	4	5	6	7	8	9
20'	2.7	3.7	5.5	6.9	8.5	10.1	10.4	10.6	10.6
16'	4.3	5.7	8.7	10.8	13.3	15.7	16.2	16.5	16.5
12'	7.6	10.2	15.4	19.2	23.6	27.9	28.8	29.3	29.4
8'	17.1	23.0	34.7	43.2	53.0	62.8	64.8	66.0	66.1
4'	68.6	91.9	138.6	172.9	212.1	251.3	259.2	263.8	264.3

Note: If using No. 11 honeycomb baffle multiply footcandle values by .80

Spot

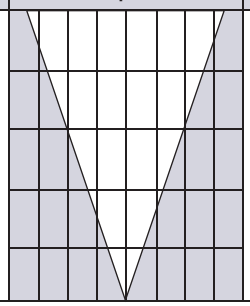

Distance from lamp	Adjust-e-Lume™ Setting 1	2	3	4	5	6	7	8	9
20'	1.9	2.4	3.7	4.8	6.0	6.8	7.1	7.1	7.1
16'	2.9	3.7	5.9	7.4	9.4	10.6	11.0	11.1	11.2
12'	5.2	6.6	10.4	13.2	16.7	18.9	19.6	19.8	19.8
8'	11.8	14.9	23.4	29.7	37.6	42.5	44.1	44.6	44.6
4'	47.0	59.6	93.6	118.9	150.3	170.1	176.3	178.3	178.6

Note: If using No. 11 honeycomb baffle multiply footcandle values by .80

Medium Flood

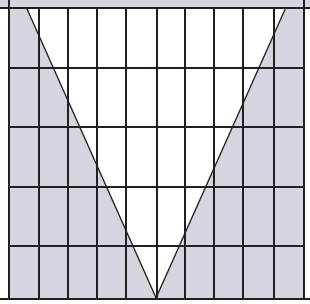

Distance from lamp	Adjust-e-Lume™ Setting 1	2	3	4	5	6	7	8	9
20'	1.1	1.4	2.2	2.8	3.3	3.8	4.0	4.1	4.1
16'	1.7	2.1	3.4	4.3	5.1	5.9	6.3	6.4	6.4
12'	3.0	3.8	6.1	7.7	9.1	10.5	11.2	11.3	11.4
8'	6.7	8.5	13.8	17.3	20.5	23.7	25.2	25.4	25.6
4'	26.9	34.2	55.0	69.3	81.9	94.7	100.6	101.6	102.4

Note: If using No. 11 honeycomb baffle multiply footcandle values by .80

Wide Flood

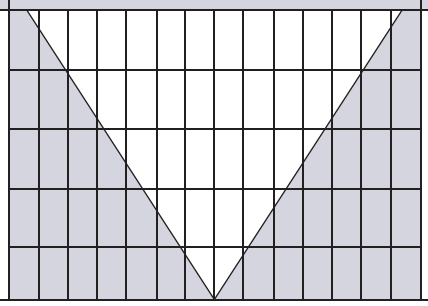

Distance from lamp	Adjust-e-Lume™ Setting 1	2	3	4	5	6	7	8	9
20'	0.5	0.6	1.0	1.2	1.4	1.7	1.8	1.8	1.8
16'	0.8	1.0	1.5	1.8	2.2	2.7	2.8	2.8	2.9
12'	1.3	1.8	2.7	3.3	3.9	4.7	4.9	5.0	5.1
8'	3.0	4.0	6.0	7.3	8.8	10.7	11.1	11.3	11.4
4'	12.0	15.9	23.9	29.3	35.1	42.6	44.4	45.1	45.7

Note: If using No. 11 honeycomb baffle multiply footcandle values by .80

TYPE LX1

Delta Star - Spot

lighting facts®
A Program of the U.S. DOE

Light Output (Lumens)	253
Watts	8.2
Lumens per Watt (Efficacy)	30
Color Accuracy Color Rendering Index (CRI)	83
Light Color Correlated Color Temperature (CCT)	3182 (Bright White)

Warm White | Bright White | Daylight
2700K 3000K 4500K 6500K

All results are according to IESNA LM-79-2008: *Approved Method for the Electrical and Photometric Testing of Solid-State Lighting.* The U.S. Department of Energy (DOE) verifies product test data and results.

Visit www.lightingfacts.com for the *Label Reference Guide*.

Registration Number: GCXV-1JQ2XQ
Model Number: DS-LED-e22-SP-12
Type: Other

lighting facts℠
A Program of the U.S. DOE

Light Output (Lumens)	354
Watts	8.1
Lumens per Watt (Efficacy)	43
Color Accuracy Color Rendering Index (CRI)	68
Light Color Correlated Color Temperature (CCT)	4080 (Bright White)

Warm White | Bright White | Daylight
2700K 3000K 4500K 6500K

All results are according to IESNA LM-79-2008: *Approved Method for the Electrical and Photometric Testing of Solid-State Lighting.* The U.S. Department of Energy (DOE) verifies product test data and results.

Visit www.lightingfacts.com for the *Label Reference Guide*.

Registration Number: GCXV-VD2NJC
Model Number: DS-LED-e23-SP-12
Type: Other

Delta Star - N. Spot

lighting facts℠
A Program of the U.S. DOE

Light Output (Lumens)	365
Watts	8.2
Lumens per Watt (Efficacy)	44
Color Accuracy Color Rendering Index (CRI)	68
Light Color Correlated Color Temperature (CCT)	4102 (Bright White)

Warm White | Bright White | Daylight
2700K 3000K 4500K 6500K

All results are according to IESNA LM-79-2008: *Approved Method for the Electrical and Photometric Testing of Solid-State Lighting.* The U.S. Department of Energy (DOE) verifies product test data and results.

Visit www.lightingfacts.com for the *Label Reference Guide*.

Registration Number: GCXV-5Y65SH
Model Number: DS-LED-e23-NSP-12
Type: Other

Delta Star - Rectilinear

lighting facts℠
A Program of the U.S. DOE

Light Output (Lumens)	299
Watts	8.5
Lumens per Watt (Efficacy)	35
Color Accuracy Color Rendering Index (CRI)	66
Light Color Correlated Color Temperature (CCT)	4022 (Bright White)

Warm White | Bright White | Daylight
2700K 3000K 4500K 6500K

All results are according to IESNA LM-79-2008: *Approved Method for the Electrical and Photometric Testing of Solid-State Lighting.* The U.S. Department of Energy (DOE) verifies product test data and results.

Visit www.lightingfacts.com for the *Label Reference Guide*.

Registration Number: GCXV-4DFT4T
Model Number: DS-LED-e23-MFL-13
Type: Other

Delta Star - M. Flood

lighting facts℠
A Program of the U.S. DOE

Light Output (Lumens)	346
Watts	8.2
Lumens per Watt (Efficacy)	42
Color Accuracy Color Rendering Index (CRI)	68
Light Color Correlated Color Temperature (CCT)	4047 (Bright White)

Warm White | Bright White | Daylight
2700K 3000K 4500K 6500K

All results are according to IESNA LM-79-2008: *Approved Method for the Electrical and Photometric Testing of Solid-State Lighting.* The U.S. Department of Energy (DOE) verifies product test data and results.

Visit www.lightingfacts.com for the *Label Reference Guide*.

Registration Number: GCXV-KBY3F8
Model Number: DS-LED-e23-MFL-12
Type: Other

Delta Star - W. Flood

lighting facts℠
A Program of the U.S. DOE

Light Output (Lumens)	345
Watts	8.3
Lumens per Watt (Efficacy)	41
Color Accuracy Color Rendering Index (CRI)	67
Light Color Correlated Color Temperature (CCT)	3981 (Bright White)

Warm White | Bright White | Daylight
2700K 3000K 4500K 6500K

All results are according to IESNA LM-79-2008: *Approved Method for the Electrical and Photometric Testing of Solid-State Lighting.* The U.S. Department of Energy (DOE) verifies product test data and results.

Visit www.lightingfacts.com for the *Label Reference Guide*.

Registration Number: GCXV-X8D75X
Model Number: DS-LED-e23-WFL-12
Type: Other

TYPE LX2

gotham®

Luminaire Type:
Catalog Number
(autopopulated):

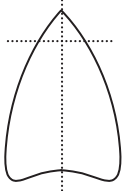

Gotham Architectural Downlighting
LED Downlights

4" Evo®
Open Reflector

Solid-State Lighting

ENERGY STAR

FEATURES

OPTICAL SYSTEM
- Self-flanged semi-specular, matte-diffuse or specular lower reflector
- Patented Bounding Ray™ optical design (U.S. Patent No. 5,800,050)
- 45° cutoff to source and source image
- Top-down flash characteristic

MECHANICAL SYSTEM
- 16-gauge galvanized steel construction; maximum 1-1/2" ceiling thickness
- Telescopic mounting bars maximum of 32" and minimum of 15", preinstalled, 4" vertical adjustment
- Toolless adjustments post installation
- Junction box capacity: 8 (4 in, 4 out) 12AWG rated for 90°C
- Light engine and driver accessible through aperture

ELECTRICAL SYSTEM
- Fully serviceable and upgradeable lensed LED light engine
- 70% lumen maintenance at 60,000 hours based on IESNA LM-79-2008
- 120-277VAC, 50/60hz power supply with 0-10V dimming (10-100%); rated for 50,000-hour life
- Overload and short circuit protected
- LEDs tested under LM80

LISTINGS
- Fixtures are CSA certified to meet US and Canadian standards; wet location, covered ceiling

WARRANTY
- 5-year limited warranty. Complete warranty terms located at: www.acuitybrands.com/CustomerResources/Terms_and_conditions.aspx

ORDERING INFORMATION

EXAMPLE: EVO 35/10 4AR 120

Series	Color temperature		Nominal lumen values		Aperture/Trim color		Distribution		Finish		Voltage
EVO	**27/**	2700 K	**06**	600 lumens	**4AR**	Clear	(blank)	1.0 s/mh	(blank)	Semi-specular	**120**
	30/	3000 K	**10**	1000 lumens	**4PR**	Pewter	**MD**	Medium (0.8 s/mh)	**LD**	Matte diffuse	**277**
	35/	3500 K	**14**	1400 lumens	**4WTR**	Wheat	**WD**	Wide (1.5 s/mh)	**LS**	Specular	**347**
	41/	4100 K	**18**	1800 lumens	**4GR**	Gold					
			20	2000 lumens	**4WR**[1]	White					

Driver		Options			
(blank)[2]	0-10V dimming driver. Minimum dimming level 10%	**SF**	Single fuse	**TRBL**	Black painted flange
ECOS2[3,4]	Lutron® Hi-Lume® 2-wire forward-phase dimming driver. Minimum dimming level 1%	**RRL**	RELOC®-ready luminaire. Provides compatibility with Lithonia RELOC system. Access above ceiling required.	**EL**[7]	Emergency battery pack with integral test switch
ECOS3[2,3]	Lutron® Hi-Lume® 3-wire or EcoSystem® dimming driver. Minimum dimming level 1%	**NEPP**	Interface for Sensor Switch® nLight® network with integral power supply. Refer to TN-623-01.	**ELR**[7]	Emergency battery pack with remote test switch
		NSD[5]	Sensor Switch® nLight® dimming relay	**CP**[8]	Chicago plenum
		TRW[6]	White painted flange	**BGTD**	Bodine generator transfer device

ACCESSORIES order as separate catalog numbers (shipped separately)

SCA4	Sloped ceiling adapter. Degree of slope must be specified (10D, 15D, 20D, 25D, 30D). Ex: SCA4 10D. Refer to TECH-190.
CTA4-8 YK	Ceiling thickness adapter (extends mounting frame to accommodate ceiling thickness up to 2").
ISD BC	0-10V wallbox dimmer. Refer to ISD-BC.

NOTES

ORDERING NOTES

1. Not available with finishes.
2. Refer to TECH-240 for compatible dimmers.
3. Not available with NEPP option.
4. 120V only.
5. One 5A relay with one 0-10 VDC dimming output, shipped installed. Refer to nSP5-D.
6. Not available with white reflector.
7. For dimensional changes, refer to TECH-140. Access above ceiling required. Not available with CP option.
8. Not available with EL or ELR options.

GOTHAM ARCHITECTURAL DOWNLIGHTING | 1400 Lester Road Conyers GA 30012 | P 800.315.4982 | gothamlighting.com

© 2010-2013 Acuity Brands Lighting, Inc. All Rights Reserved. Rev. 10/09/13. Specifications subject to change without notice.

Conformed Set - May 29, 2015

gotham®

DIMENSIONAL DATA

All dimensions are inches (centimeters) unless otherwise noted.

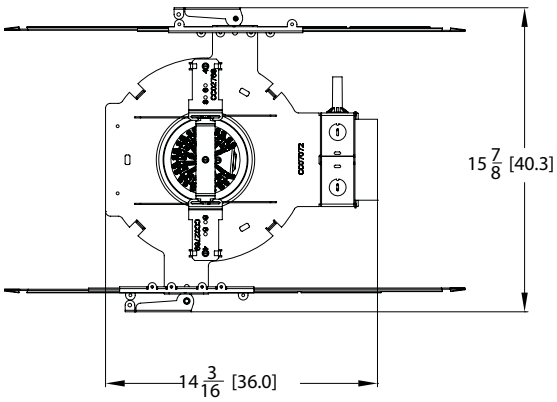

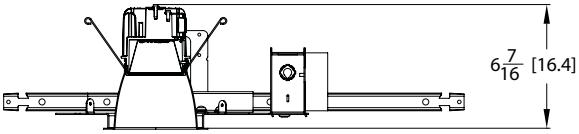

Aperture: 4-5/16 (11)
Ceiling Opening: 5-1/8 (13)
Overlap Trim: 5-7/16 (13.8)

ELECTRICAL

WATTAGE CONSUMPTION MATRIX		
LUMENS	WATTAGE	LUMENS per WATT
2000	31	65
1800	29	58
1400	26	55
1000	21	51
600	16	49

Conformed Set - May 29, 2015
© 2010-2013 Acuity Brands Lighting, Inc. All Rights Reserved. Rev. 10/09/13. Specifications subject to change without notice.

PHOTOMETRY

Distribution Curve	Distribution Data	Output Data	Coefficient of Utilization	Illuminance: Single Luminaire 30" Above Floor

EVO 35/6 4AR LS

INPUT WATTS: 15.6, DELIVERED LUMENS: 757.7, LM/W=48.6, 1.6 S/MH, TEST NO. LTL21260

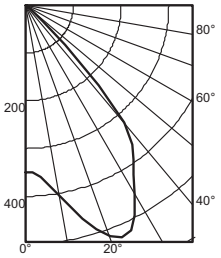

	Ave	Lumens
0	349	
5	361	36
15	463	133
25	520	234
35	393	245
45	117	105
55	2	4
65	1	1
75	0	0
85	0	0
90	0	

Zone	Lumens	% Lamp
0° - 30°	402.6	53.1
0° - 40°	647.4	85.4
0° - 60°	756.6	99.9
0° - 90°	757.7	100.0
90° - 180°	0.0	0.0
0° - 180°	757.7	*100.0

*Efficiency

pf / pc / pw	80% 50%	80% 30%	80% 10%	20% 70% 50%	20% 70% 30%	20% 70% 10%	50% 50%	50% 30%	50% 10%
0	119	119	119	116	116	116	111	111	111
1	110	107	105	108	105	103	104	102	100
2	101	97	93	99	95	92	96	93	90
3	93	87	83	92	86	82	89	85	81
4	86	79	75	84	79	74	82	77	73
5	79	72	68	78	72	67	76	71	67
6	73	66	61	72	66	61	71	65	61
7	68	61	56	67	60	56	65	60	55
8	63	56	51	62	56	51	61	55	51
9	58	51	47	58	51	47	57	51	47
10	54	48	43	54	47	43	53	47	43

Mounting Height	Inital FC Center Beam	50% beam - 76.1° Diameter	50% beam - 76.1° FC	10% beam - 91.1° Diameter	10% beam - 91.1° FC
8.0	11.5	8.6	5.8	11.2	1.2
10.0	6.2	11.7	3.1	15.3	0.6
12.0	3.9	14.9	1.9	19.4	0.4
14.0	2.6	18.0	1.3	23.5	0.3
16.0	1.9	21.1	1.0	27.5	0.2

EVO 35/10 4AR LS

INPUT WATTS: 20.6, DELIVERED LUMENS: 1039.0, LM/W=50.4, 1.5 S/MH, TEST NO. LTL21209

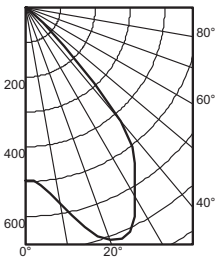

	Ave	Lumens
0	497	
5	513	51
15	653	186
25	709	320
35	547	337
45	156	138
55	3	5
65	1	1
75	0	0
85	0	0
90	0	

Zone	Lumens	% Lamp
0° - 30°	557.2	53.6
0° - 40°	894.6	86.1
0° - 60°	1037.7	99.9
0° - 90°	1039.0	100.0
90° - 180°	0.0	0.0
0° - 180°	1039.0	*100.0

*Efficiency

pf / pc / pw	80% 50%	80% 30%	80% 10%	20% 70% 50%	20% 70% 30%	20% 70% 10%	50% 50%	50% 30%	50% 10%
0	119	119	119	116	116	116	111	111	111
1	110	107	105	108	105	103	104	102	100
2	101	97	93	99	95	92	96	93	90
3	93	88	83	92	87	83	89	85	81
4	86	80	75	85	79	74	82	77	74
5	79	73	68	78	72	68	76	71	67
6	73	66	62	72	66	61	71	65	61
7	68	61	56	67	61	56	66	60	56
8	63	56	51	62	56	51	61	55	51
9	58	52	47	58	52	47	57	51	47
10	54	48	44	54	48	44	53	47	43

Mounting Height	Inital FC Center Beam	50% beam - 75.3° Diameter	50% beam - 75.3° FC	10% beam - 90.7° Diameter	10% beam - 90.7° FC
8.0	16.4	8.5	8.2	11.1	1.6
10.0	8.8	11.6	4.4	15.2	0.9
12.0	5.5	14.7	2.8	19.2	0.6
14.0	3.8	17.7	1.9	23.3	0.4
16.0	2.7	20.8	1.4	27.3	0.3

EVO 35/14 4AR LS

INPUT WATTS: 26.2, DELIVERED LUMENS: 1431.9, LM/W=54.7, 1.5 S/MH, TEST NO. LTL21213

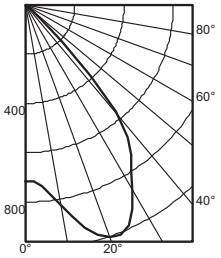

	Ave	Lumens
0	716	
5	738	73
15	934	265
25	986	445
35	743	458
45	203	182
55	4	6
65	1	1
75	0	0
85	0	0
90	0	

Zone	Lumens	% Lamp
0° - 30°	784.3	54.8
0° - 40°	1242.2	86.8
0° - 60°	1430.4	99.9
0° - 90°	1431.9	100.0
90° - 180°	0.0	0.0
0° - 180°	1431.9	*100.0

*Efficiency

pf / pc / pw	80% 50%	80% 30%	80% 10%	20% 70% 50%	20% 70% 30%	20% 70% 10%	50% 50%	50% 30%	50% 10%
0	119	119	119	116	116	116	111	111	111
1	110	107	105	108	105	103	104	102	100
2	101	97	93	100	96	92	96	93	90
3	93	88	83	92	87	83	89	85	81
4	86	80	75	85	79	75	83	78	74
5	80	73	68	79	72	68	77	71	67
6	74	67	62	73	66	62	71	66	61
7	68	61	57	67	61	57	66	60	56
8	63	57	52	63	56	52	62	56	52
9	59	52	48	58	52	48	57	52	48
10	55	48	44	54	48	44	54	48	44

Mounting Height	Inital FC Center Beam	50% beam - 73.6° Diameter	50% beam - 73.6° FC	10% beam - 90.0° Diameter	10% beam - 90.0° FC
8.0	23.7	8.2	11.8	11.0	2.4
10.0	12.7	11.2	6.4	15.0	1.3
12.0	7.9	14.2	4.0	19.0	0.8
14.0	5.4	17.2	2.7	23.0	0.5
16.0	3.9	20.2	2.0	27.0	0.4

EVO 35/18 4AR LS

INPUT WATTS: 29.0, DELIVERED LUMENS: 1682.7, LM/W=58.0, 1.5 S/MH, TEST NO. LTL21149

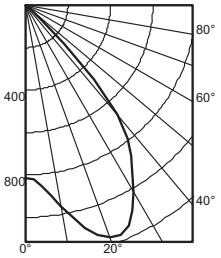

	Ave	Lumens
0	813	
5	854	85
15	1086	308
25	1149	519
35	869	536
45	256	223
55	6	9
65	2	2
75	1	1
85	0	0
90	0	

Zone	Lumens	% Lamp
0° - 30°	913.1	54.3
0° - 40°	1449.4	86.1
0° - 60°	1680.5	99.9
0° - 90°	1682.7	100.0
90° - 180°	0.0	0.0
0° - 180°	1682.7	*100.0

*Efficiency

pf / pc / pw	80% 50%	80% 30%	80% 10%	20% 70% 50%	20% 70% 30%	20% 70% 10%	50% 50%	50% 30%	50% 10%
0	119	119	119	116	116	116	111	111	111
1	110	107	105	108	105	103	104	102	100
2	101	97	93	99	95	92	96	93	90
3	93	88	83	92	87	83	89	85	81
4	86	80	75	85	79	75	83	78	74
5	79	73	68	78	72	68	77	71	67
6	73	67	62	73	66	62	71	65	61
7	68	61	56	67	61	56	66	60	56
8	63	56	52	62	56	52	61	56	51
9	59	52	48	58	52	47	57	51	47
10	55	48	44	54	48	44	53	48	44

Mounting Height	Inital FC Center Beam	50% beam - 74.3° Diameter	50% beam - 74.3° FC	10% beam - 90.7° Diameter	10% beam - 90.7° FC
8.0	26.9	8.3	13.4	11.1	2.7
10.0	14.5	11.4	7.2	15.2	1.4
12.0	9.0	14.4	4.5	19.2	0.9
14.0	6.1	17.4	3.1	23.3	0.6
16.0	4.5	20.5	2.2	27.3	0.4

PHOTOMETRY NOTES

- Tested in accordance with IESNA LM-79-08.
- Tested to current IES and NEMA standards under stabilized laboratory conditions.
- Actual performance may differ as a result of end-user environment and application.
- Actual wattage may differ by +/- 10% when operating between 120-277V +/- 10%.
- CRI: 83 typical.
- Consult factory or IES file for microgroove baffle, black cone or other photometric reports.

Conformed Set - May 29, 2015

© 2010-2013 Acuity Brands Lighting, Inc. All Rights Reserved. Rev. 10/09/13. Specifications subject to change without notice.

The Legendary Name in Street Lighting

THE PENNSYLVANIA GLOBE GASLIGHT CO.
300 Shaw Road North Branford CT 06471
Tel: 203 484 7749 Fax: 203 484 7758
www.PennGlobe.com

MADE IN CT

PennGLOBE
MANUFACTURING SMART LIGHTING SOLUTIONS

TYPE LX3

UCONN CAMPUS STANDARD **PROJECT #020-8674** **DATE: 10/20/14**

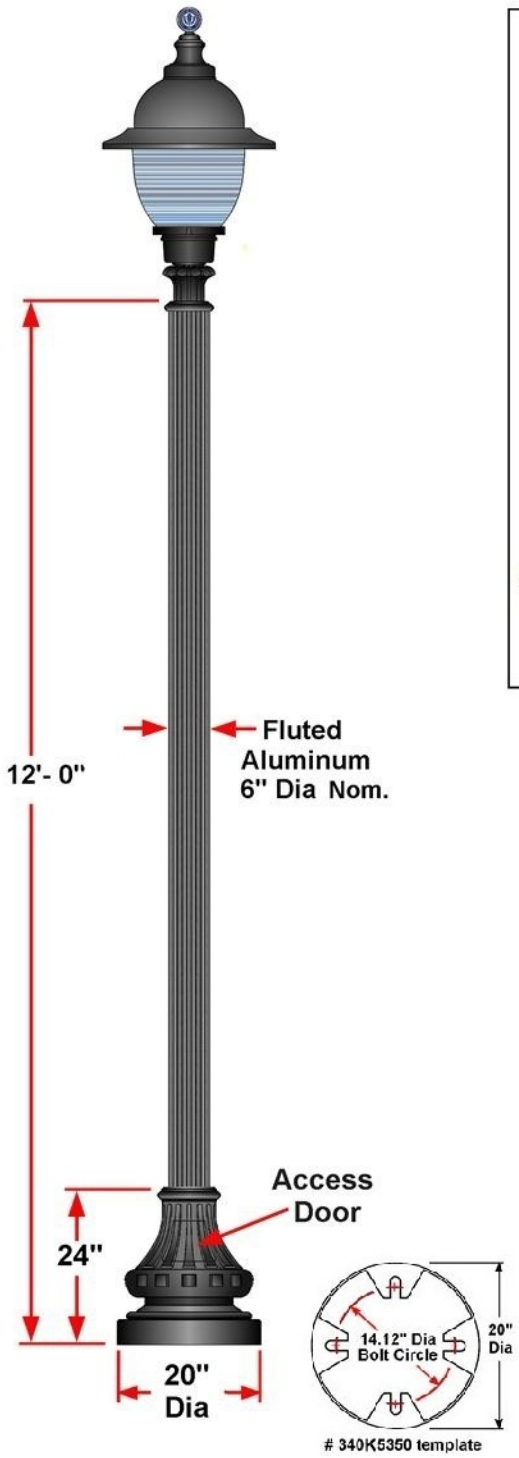

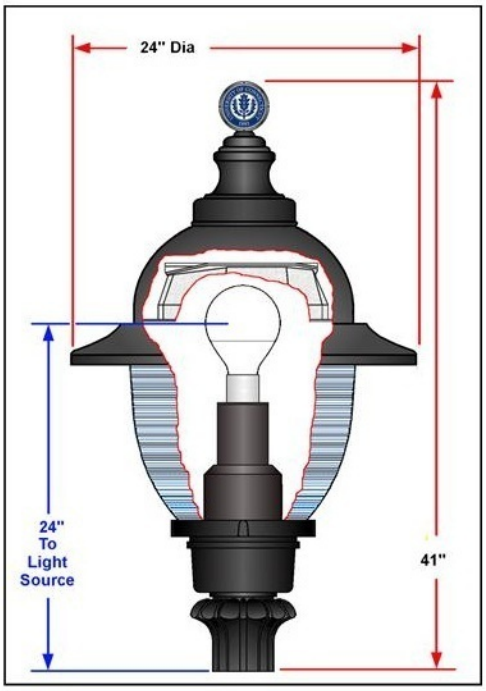

- Per UCONN Specifications
- Dark Sky Design Specs
- Aluminum Dome & Canopy
- UCONN Seal Finial
- Type V Acrylic Refractor Globe
- Cast Aluminum Lotus fitter
- 165W—120V Single Tap Available

STOCK NUMBER	DESCRIPTION
F9AL-GX935-UC934	PARKLANE UC LUMINAIRE
P649-W1N21-4000	WASHINGTON POST

PRIMARY LIGHT SOURCE:
PennSTAR® INDUCTION

WATTAGE:
165 - 5K

VOLTAGE:
200-277V AUTOSENSE

SECONDARY LIGHT SOURCE:
N/A

GLOBE:
PRISMATIC ACRYLIC—TYPE V

POLE HEIGHT:
12' 0" OAL

BOLT DOWN
ACCESS DOOR
GOUNDING LUG

FINISH:
BLACK 1003X PT

QUANTITY:
(X)

APPROVED BY: _____

DATE: _____

PREPARED BY: M.STONIER

The information contained in this drawing is the sole property of The Pennsylvania Globe Gaslight Co. Any reproduction in part or as a whole without the written permission of The Pennsylvania Globe Gaslight Co. is prohibited and may be subject to legal restriction or sanction. The information contained is privileged and confidential and may be protected from disclosure.

Conformed Set - May 29, 2015

TYPE LX4, LX4A

EXECUTIVE-RT

STERNER™ EXTRUDED SERIES

Job Name: _____

Fixture Type: _____

Job Number: _____

Distributor: _____

Distributor P.O.: _____

EXEC - RT21 SPEC SHEET

Dimensions: 16" x 21" x 6.75"
Arm: 2" x 4" x 8"
Tie-Rod Spacing: 3" (9/16" dia. holes)
Weight: 11 lbs

EPA: 1.6	(10 - single)	
3.2	(28 - 2@180)	(29 - 2@90)
3.3	(39 - 3@90)	(32 - 3@120)
4.2	(49 - 4@90)	

ORDERING SEQUENCE

EXEC-RT21 - [ ] - [ ] - [ ] - [ ] - [ ] - [ ] - [ ] - [ ] - [ ] - [ ]

FAMILY

EXEC RT21

OF LEDS

- **30L** 30 High brightness LEDs
- **60L** 60 High brightness LEDs

CCT

- **3K** 3000K
- **4K** 4200K
- **5K** 5100K
- **AM** Amber (590 µm available for "Turtle Friendly" applications (consult factory)

DRIVE CURRENT

- **070** 700mA (standard)
- **035**[4] 350mA Amber (required with Amber CCT)

DISTRIBUTION

- **2** Type II
- **3** Type III
- **4** Type IV
- **5M** Type V medium
- **5S** Type V short
- **5W** Type V wide

VOLTAGE

- **U** Universal 120V-277V, 50/60 Hz
- **1**[1] 120V
- **2**[1] 208V
- **3**[1] 240V
- **4**[1] 277V
- **5** 480V, 60 Hz
- **F** 347V, 60 Hz
- **E** 220V, 50 Hz

MOUNTING

- **10**
- **28**
- **29**
- **32**[2]
- **39**
- **49**

Note: First digit denotes fixture quantity per assembly

OPTIONS

- **WM** Wall mount
- **VF** Vertical slipfitter
- **HF** Horizontal slipfitter
- **F**[2] Fuse
- **EXI** Extruded insert
- **BC**[3] Backlight Control

CONTROLLABILITY OPTIONS

- **SC0**[2] On/Off control - No light output when no motion detected
- **SCP**[2] High/low control - user programmable settings; Factory default is 50%
- **PR**[2] Photo cell receptacle
- **WIH**[2] In-fixture wireless control module (120, 277, 347 & 480V)

COLOR

Powder Coat

- **BL** Black
- **DB** Dark Bronze
- **WH** White
- **PS** Platinum Silver

POLE SECTION

- **STR** Square straight
- **C30** 3.0" dia round
- **C35** 3.5" dia round
- **C40** 4.0" dia round
- **C45** 4.5" dia round
- **C50** 5.0" dia round
- **C60** 6.0" dia round

[1] Select only when voltage specific option included SC0, SCP, PR, WIH, F
[2] Must select specific voltage (not "U")
[3] Not available with distributions: 5S, 5M or 5W
[4] Only available with Amber CCT

GENERAL OPTIONS

❑ **WM** Wall mount

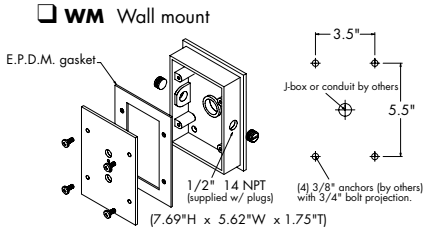

❑ **VF** Vertical slip fitter

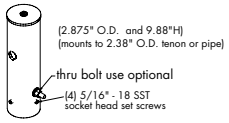

❑ **HF** Horizontal slip fitter

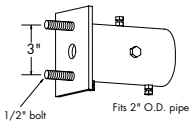

❑ **FL** Fuse luminaire

❑ **EXI** Extruded arm insert[2]

❑ **BC** Backlight control

❑ **N** Not required

FINISH OPTIONS

Powder

❑ **BL** Black

❑ **DB** Dark Bronze

❑ **WH** White

❑ **AL** Natural Aluminum

❑ **NS** Not-Standard Finish (consult factory) (provide color chip)

Note: 1) '32' mounting (3@120) only available with round pole or modified pole top fitter.

2) If the color for the 'EXI' extruded arm insert is not specified, insert will be brushed aluminum.

Conformed Set - May 29, 2015

SPECIFICATIONS

Housing
The luminaire housing shall be mitre-formed construction from a single piece of aluminum extrusion, with only a single seam located on the back of the box where the arm detail is located. The sidewall extrusion shall incorporate an integral structural rib for additional strength and support that runs the full perimeter of the housing. The luminaire canopy shall be of aluminum sheet that is crowned and crimped directly into a specially designed upper lip of the sidewall extrusion. This lip shall be lined with an Isocryl gasket prior to the crimping process to form a sealed canopy without the use of silicone or welds.

Door Frame & Assembly
Door frame shall be mitre-cut construction from a single piece of aluminum extrusion and mechanically fastened with no welds. The entire frame assembly is to always be fully anodized in a natural finish. An extruded silicone gasket shall run the entire perimeter of the frame to form a compression seal directly to the housing when shut to create a sealed optical chamber. Door shall open by a tool-less push button in the front of the housing, and shall hinge on aluminum door pins that slide into the housing sidewall. Door shall be self-retained, and catches with a spring-loaded safety latch to prevent accidental dropping before the door hinges completely open. The entire door frame assembly can then be removed without tools by sliding and lifting the assembly from the center of the housing.

Arm Assembly
Single piece extruded aluminum arm is standard with an optional aluminum decorative insert (color/finish to be specified). The arm is fastened to the pole via (2) non-slip tie-rod channels serving as a compression member with (2) 1/2" zinc-plated steel tie-rods and lock nuts in tension between pole and luminaire.

Construction
Luminaire is suitable for applications requiring 3G testing prescribed by ANSI C136.31.

Certifications/Listings
- DesignLights Consortium (DLC) qualified, Consult DLC website for more details: http://www.designlights.org/QPL
- Listed to UL1598 for wet locations

Optical Systems
- Choice of 30 or 60 high brightness LED configurations with individual acrylic lenses specially designed for IES Type II, III, IV and V distributions
- CCT: 3000K standard, 4200K, 5100K and turtle friendly Amber LED options
- CRI: 80 @ 3000K, 70 @ 4200K, and 67 @ 5100K

Controllability
- Drivers are 0-10V dimming standard. Occupancy, photocell, and wiHUBB wireless controls available for complete on/off and dimming operation.
- SCO option – On/Off control - No light output when no motion detected
- SCP option – High/low control - user programmable settings; Factory default is 50%
- WIH option - In-fixture wireless control module (120, 277, 347 & 480V) www.hubbell-automation.com

Electrical
A Sterner designed Primary Electrical Disconnect system (male/female plug system) is mounted to the driver tray and housing respectively. The primary electrical circuit shall be disconnected as soon as the door drops in the open position, thus eliminating any exposed live electrical connections and possible shock hazard during service. The entire fixture is cULus listed for wet location use.

- Universal input voltage 120-277 VAC, 50/60 Hz
- Integral step-down transformer for 347V & 480V
- Ambient operating temperature -40˚ C to 40˚ C
- Automatic thermal self-protection
- Drivers have greater than 90% power factor and less than 10% THD
- Optional continuous dimming to 10% or dual circuitry available
- LED drivers have output power over-voltage, over-current protection and short circuit protection with auto recovery
- LED electrical assembly, including PR devices, consumes no power in the 'off' state
- Surge protection of 10KA 8/20 µSec wave; clamping voltage of 320V & surge rating of 273J

Finish
Finished parts shall be washed in a multi-stage phosphate processing system and then finished with a standard polyester urethane powder coat paint. The door frame assembly shall always be anodized in a natural finish with the ballast tray being e-coated in black. Optional anodized finishes are available and shall use an electrolytic process to oxidize and colorize the aluminum for a finish that is extremely resistant to flaking, fading, and corrosive environments. Standard powder colors are dark bronze, black, white, and natural aluminum. Standard anodized colors are bronze (light, medium, dark), black, and natural aluminum. Custom powder, anodized, and wet finishes are available (contact factory for availability).

Conformed Set - May 29, 2015

TYPE LX5

LED wall luminaires with directed light

Housing: One piece die-cast aluminum for direct attachment to 3 1/2" or 4" octagonal wiring box. Die castings are marine grade, copper free (≤ 0.3% copper content) A360.0 aluminum alloy.

Enclosure: One piece die-cast aluminum cover frame secured by two (2) captive, stainless steel set screws threaded into stainless steel inserts. Matte safety glass. Fully gasketed for weather tight operation using a molded 'U' channel silicone rubber gasket.

Electrical: 6.6W LED luminaire, 9 total system watts, -30°C start temperature. Integral 120V through 277V electronic LED driver, 0-10V dimming. LED module(s) are available from factory for easy replacement. Standard LED color temperature is 3000K with an 85 CRI. Available in 4000K (85 CRI); add suffix K4 to order.

Note: LEDs supplied with luminaire. Due to the dynamic nature of LED technology, LED luminaire data on this sheet is subject to change at the discretion of BEGA-US. For the most current technical data, please refer to www.bega-us.com.

Finish: All BEGA standard finishes are polyester powder coat with minimum 3 mil thickness. Available in four standard BEGA colors: Black (BLK); White (WHT); Bronze (BRZ); Silver (SLV). To specify, add appropriate suffix to catalog number. Custom colors supplied on special order

CSA certified to U.S. and Canadian standards, suitable for wet locations. Protection class IP64

Weight: 1.5 lbs.

Luminaire Lumens: 291

Tested in accordance with LM-79-08

Type:
BEGA Product:
Project:
Voltage:
Color:
Options:
Modified:

		Lamp	A	B	C
2261LED	ADA	6.6W LED	6⅞	3¾	2⅜

BEGA-US 1000 BEGA Way, Carpinteria, CA 93013 (805) 684-0533 FAX (805) 566-9474 www.bega-us.com
©copyright BEGA-US 2014 Updated 05/14

Conformed Set - May 29, 2015

LIGHTRAIL™

TYPE LX6, LX6A

LR5 LED

Santa Monica Place, CA - LR5-LED-SS-INT-RE

Description

LR5-LED Lightrail Series is a complete illuminated handrail system, ideal for indoor or outdoor applications such as stairs, ramps, and walkways. The round design provides symmetrical or asymmetrical illumination with dimensions that conform to ADA requirements. Lightrail is offered in post mount or wall mount configurations. Other uses include elevator hand holds and guardrailing.

Construction

• Available in extruded aluminum and formed stainless steel with welded and blended joints for a seamless appearance • A high impact extruded acrylic lens snaps into place and is further retained by fasteners at each end • The flat lens design minimizes visible brightness at sides and is available in clear or frosted • Each rail is tailored to fit existing stairs, ramps, and walkways • Aluminum rails supplied with a powder coat or anodized finish • Stainless steel rails supplied with a #4 satin finish, passivated

Electrical

• LED modules are 24 VDC constant voltage at 4.5 watts and 171 lumens per foot. Available in 3000˚K or 4100˚K color temperatures. Beam spreads in 50˚, 65˚, and 90˚ patterns • LEDs are configured to allow uninterrupted illumination • Electrical feed locations are pre determined at time of submittal • LED drivers may be integral in the posts or railing; and may be remote if required • Dimmable drivers are available upon request

Special Features

• Custom mounting brackets and end treatments are available to meet most design criteria • Stainless steel cable and glass panel infills available

End Treatments

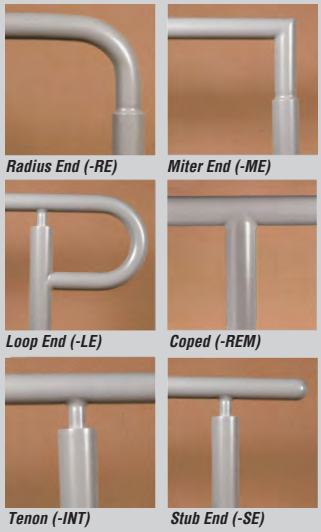

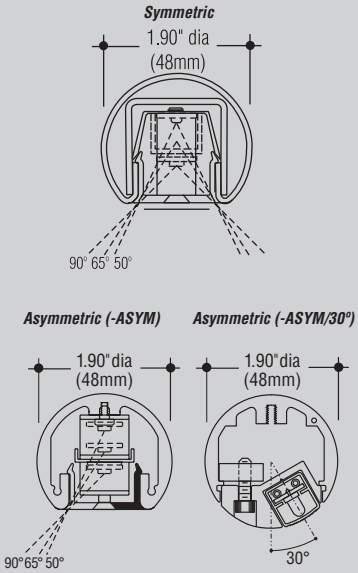

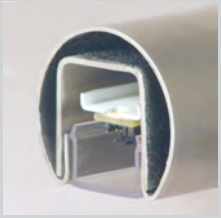
Formed Stainless Steel

Extruded Aluminum

Catalog Number	Stainless Steel (-SS)	Aluminum (-AL)
Post mounted, integral driver	**LR5P-LED-SS-INT**	**LR5P-LED-AL-INT**
Post mounted, remote driver	**LR5P-LED-SS-REM**	**LR5P-LED-AL-REM**
Wall mounted, integral driver	**LR5W-LED-SS-INT**	**LR5W-LED-AL-INT**
Wall mounted, remote driver	**LR5W-LED-SS-REM**	**LR5W-LED-AL-REM**

Options

Baseplate: 5" x 5" x 3/8" (Aluminum)
5" x 5" x 3/16" (Stainless Steel)
baseplate with four 5/8" holes. Add suffix **-BP**.
Frosted Lens: Add suffix **-FL**.
Ends: Add suffix. Stub **-SE**. Miter **-ME**.
Loop **-LE**. Radius **-RE**.
Escutcheon Plates: Add suffix **-ES**.
Asymmetric distribution:
One side blocked. Add suffix **-ASYM**.
30° tilt. Add suffix **-ASYM/30°**
4100°K Color Temperature: (3000˚K Standard).
Add suffix **-41K**.

Beam Spread: (Clear Lens, 90˚ Standard).
50˚: Add suffix **-50**.
65˚: Add suffix **-65**.

How to Specify

Every Lightrail is custom designed and fabricated to your specific project conditions. Drawings will be submitted on each project requesting specific dimensions to assure proper fit. Plans and elevation drawings are required for pricing and submittal drawing production.
1. Submit catalog number, options, and voltage; (example: LR5P-LED-SS-INT-RE-277).
2. Add special features and requirements necessary to complete specification.

COLE Lighting

C.W. Cole & Company, Inc.
2560 N. Rosemead Boulevard
South El Monte, CA 91733-1593

Tel. (626) 443-2473
Fax (626) 443-9253
info@colelighting.com
www.colelighting.com

Conformed Set - May 29, 2015

TYPE LX6, LX6A

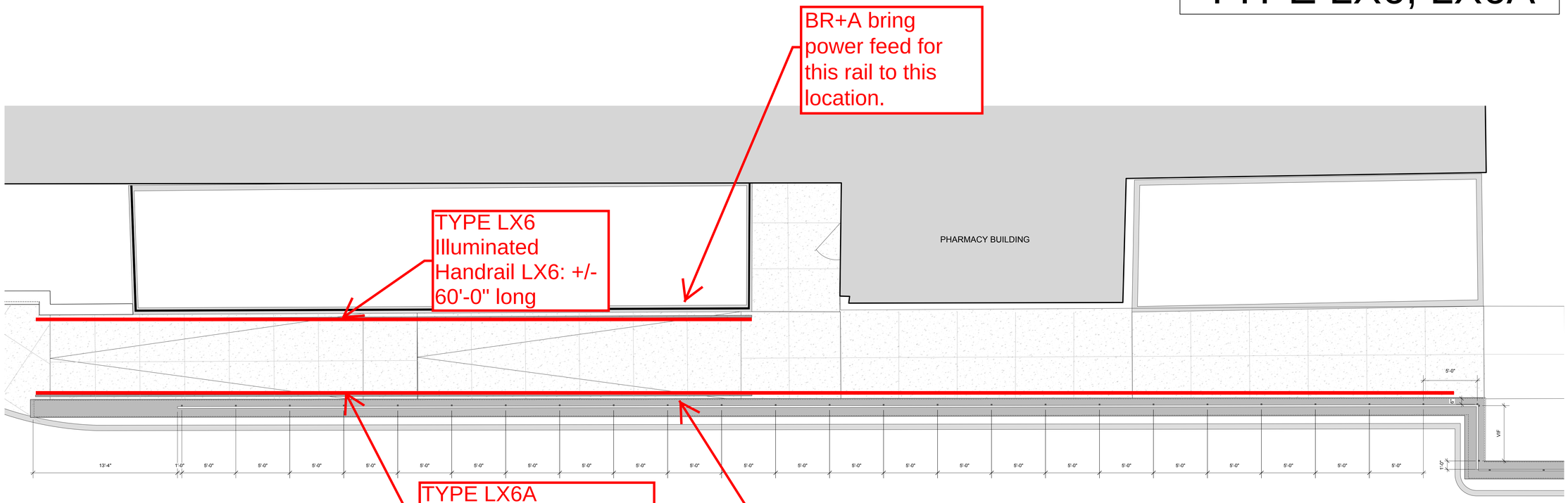

1 GUARDRAIL A LAYOUT PLAN
1/4" = 1'-0"

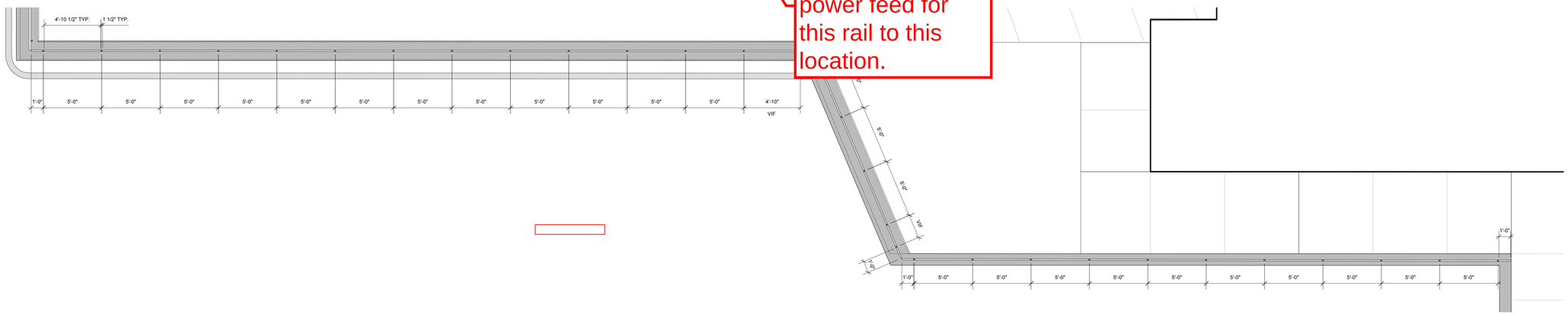

2 GUARDRAIL B LAYOUT PLAN 1
1" = 10'-0"

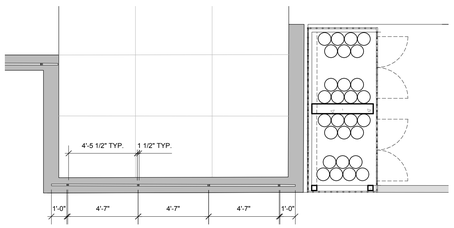

3 GUARDRAIL B LAYOUT PLAN 2
1" = 10'-0"

Per conversation with Steven Cole on 2-6-14, documents should bring power to locations indicated and shop drawing will figure out which posts get drivers and which dont. Round railing should be drawn at 1.9" OD and round posts at 2- 3/8" OD. Datialing of rail

MG-SK-56 REV 02-06-14
NESB Illuminated Handrail Scope

UNIVERSITY OF CONNECTICUT

ARCHITECT:
Mitchell | Giurgola Architects, LLP
630 Ninth Avenue, Suite 711
New York, New York 10036
212 663 4000

MEP/IT ENGINEER:
Bard, Rao + Athanas Engineers
105 Madison Avenue, 10th Floor
New York, New York 10016
212 840 0060

STRUCTURAL ENGINEER:
Severud Associates
469 Seventh Avenue, Suite 900
New York, New York 10018
212 986 3700

SITE/CIVIL ENGINEER:
Alfred Benesch & Company
90 National Drive
Glastonbury, Connecticut 06033
860 633 8341

LANDSCAPE ARCHITECTS:
DIRTWORKS, PC
200 Park Avenue South
New York, New York 10003
212 529 2263

LEED CONSULTANT:
Steven Winter Associates, Inc.
61 Washington Street
Norwalk, Connecticut 06854
203 857 0200

ISSUE/REVISION:

NO.	DATE	COMMENTS

COPYRIGHT © 2013 MITCHELL | GIURGOLA ARCHITECTS
ALL DIMENSIONS AND EXISTING CONDITIONS SHALL BE CHECKED AND VERIFIED BY THE CONTRACTOR BEFORE PROCEEDING WITH THE WORK

KEY PLAN

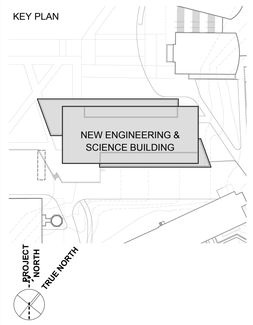

Project:

NEW ENGINEERING AND SCIENCE BUILDING

Drawing Title:

GUARD RAIL LAYOUT

PROJECT NO: 092203	DATE: 22 DECEMBER 2014
PHASE: PARTIAL PERMIT SET	SCALE: 1/8" = 1'-0"

L3.01A

SECTION 270510
TELECOMMUNICATIONS

PART 1 – GENERAL

1.1 PROVISIONS INCLUDED

A. All of the Contract documents, as listed on the Table of Contents and including General Conditions, Supplemental Conditions and Division 1, General Requirements, shall be included in, and made part of, this Section.

B. Examine all drawings and criteria sheets and all other Sections of the specifications for requirements which affect work under this Section, whether or not such work is specifically mentioned in this Section.

C. Coordinate work with that of all other Trades affecting or affected by the work of this Section. Cooperate with such Trades to assure the steady progress of all work under the Contract.

D. The Contractor shall be a certified installer as registered with the structured cabling and Fiber Optic system product manufacturer (Hubbell and Corning Cable Systems) and shall submit in writing proof of such membership as an up-to-date status with mentioned manufacturer and shall offer a minimum of a twenty-five year product and application "Hubbell Mission Critical Extended Warranty Program and Corning Cable Systems LanScape Extended Warranty Program" of the structured cabling system. The structured cabling system shall, at a minimum, guarantee functionality for the following applications:

1. 100 Megabits per second (Mb/s), 1 Gigabit per second (Gb/s) and 10 Gigabit Ethernet applications - Horizontal Distribution Subsystem
2. 10,000 Megabits per second (Mb/s) or 10 Gigabit per second (Gb/s) Ethernet applications – Backbone Distribution Subsystem via Fiber Optic Cable.

E. Each installation crewmember shall be individually certified as having successfully completed the manufacturer's training program for the Structured Cabling System proposed – Category 6 and Fiber Optic cabling.

F. Technicians on the job must be T-2 licensed and an employee of your company. Subcontracting of the work is not permitted without the written permission of University of Connecticut. Each technician will require a background check by UCONN.

1.2 DEFINITIONS

A. Words in the singular shall also mean and include the plural, wherever the context so indicates, and words in the plural shall mean the singular, wherever the context so indicates.

B. Wherever the terms “shown on drawings” are used in the specifications, they shall mean “noted”, “indicated”, “scheduled”, “detailed”, or any other diagrammatic or written reference made on the drawings.

C. Wherever the term “provide” is used in the specifications it will mean “furnish” and “install”, “connect”, “apply”, “erect”, “construct”, or similar terms, unless otherwise indicated in the specifications.

D. Wherever the term “material” is used in the specifications it will mean any “product”, “equipment”, “device”, “assembly”, or “item” required under the Contract, as indicated by trade or brand name, manufacturer’s name, standard specification reference or other description.

E. The terms “approved” or “approval” shall mean the written approval of the Architect.

F. The term “Contract Documents” shall mean the entire set of Drawings and Specifications as listed in the Table of Contents of the General Conditions including all bound and unbound material and all items officially issued to date such as addenda, bulletins, job modifications, etc.

G. The term “specification” shall mean all information contained in the bound or unbound volume, including all “Contract Documents” defined therein, except for the drawings.

H. The term “horizontal distribution cabling” shall mean all cabling that extends between and includes the horizontal Intermediate Distribution Frame (IDF) Rooms and the telecommunications outlet.

I. The term “horizontal cross-connect” shall mean all cabling that forms a connection scheme between each horizontal and backbone cabling subsystems, using patch cords or jumpers that attach to connecting hardware on each end.

J. The term “intrabuilding backbone” shall mean all cabling used to connect the TRs, cross-connects, entrance facilities and equipment rooms, creating a backbone communication system within a building.

K. The term “interbuilding backbone” shall mean all cabling used to connect the TRs, cross-connects, entrance facilities and equipment rooms, between more than one building in a campus environment, creating a backbone communication system between buildings.

L. The term “firestop” shall mean a specific construction of approved materials and methods that fill the opening in a wall or floor assembly, and around and between any items that penetrate the wall or floor, including termination devices (outlet box) and also the termination device means of support.

M. The term “wire basket” system shall mean a primary cable tray support system located at every floor level and inclusive of straight sections of continuous wire mesh, field formed horizontal and vertical bends, tees, drop outs, supports and accessories.

N. The term “specification” shall mean all information contained in the bound or unbound volume, including all “Contract Documents” defined therein, except for the drawings.

O. The terms "directed", "required", "permitted", "ordered", "designated", "prescribed", and similar words shall mean the direction, requirement, permission, order, designation or prescription of the Architect; the terms "approved", "acceptable", "satisfactory", and similar words shall mean approved by, acceptable or satisfactory to the Architect; and, the terms "necessary", "reasonable", "proper", "correct", and similar words shall mean necessary, reasonable, proper or correct in the judgment of the Architect.

P. "Accessible" indicates ease of access with or without the use of ladders and without requiring extensive removal of other equipment, such as ductwork, piping, etc. to gain access. "Accessible ceiling" indicates acoustic tile type hung ceilings. Concealed spline or gypsum ceilings with access panels shall not be considered accessible ceilings.

Q. "Concealed" means hidden from sight in chases, furred spaces, shafts, hung ceilings, embedded in construction or in crawl spaces.

R. "Exposed" means not installed underground or "concealed" as defined above.

S. "Architect" shall refer to the Architect "Mitchell Giurgola Architects, LLP".

T. “Engineer” shall refer to the Engineer, “Bard, Rao + Athanas Consulting Engineers, LLC”.

U. "Owner" shall refer to the Owner "University of Connecticut" or its designated representative.

V. “Other Work Contractor” (O.W.C.) refers to the Contractor(s), or Subcontractor(s) performing work under other Sections of the Contract Documents.

1.3 REGULATORY REQUIREMENTS, CODES AND STANDARDS

A. Perform work strictly as required by rules, regulations, standards, codes, ordinances, and laws of local, state, and Federal governments, and other authorities that have legal jurisdiction over the site.

B. In case of difference between regulations, standards, codes, ordinance and laws of local, state, and Federal governments, and other authorities that have legal jurisdiction over the site, and the Contract Documents, the Contractor shall promptly notify the Architect in writing of any such difference.

C. In case of conflict between the Contract Documents and the requirements of any Code or Authorities having jurisdiction, the most stringent requirements of the aforementioned shall govern.

D. Should the Contractor perform any work that does not comply with the requirements of the applicable Building Codes, State Laws, Local Ordinances, Industry Standards and Utility Company Regulations, he shall bear all costs arising in correcting the deficiencies, as approved by the Architect/Owner.

E. Applicable provisions of the latest editions of the following Codes and Trade Standard Publications shall apply to the work of this Section and are hereby incorporated into, and made part of, the Contract Documents:

1. NFPA 70: National Electric Code;
2. Occupational Safety and Health Act (OSHA).
3. UL Listing of Communications Cabling and Hardware
4. BICSI Current Version Telecommunications Distribution Methods Manual
5. ANSI/TIA/EIA-568-C - "Commercial Building Telecommunication Standard"
6. ANSI/TIA/EIA-569-C - "Commercial Building Standard for Telecommunications Pathways and Spaces"
7. ANSI/EIA/TIA-526-14 "Method B: Optical Power Loss Measurements of Installed Multimode Fiber Cable Plant".
8. ANSI/EIA/TIA-526-7 "Method 1: Optical Power Loss Measurements of Installed Single-mode Fiber Cable Plant".
9. ANSI/TIA/EIA-606 –B "Administration Standard for the Telecommunications Infrastructure of Commercial Buildings".
10. ANSI/TIA/EIA-607 –B "Commercial Building Grounding and Bonding Requirements for Telecommunications".
11. ANSI/EIA/TIA – 758-A – Customer-Owned Outside Plant Telecommunication Cabling Standard
12. ANSI/EIA/TIA-862 – Building Automation System Cabling Standard for Commercial Building
13. ANSI/EIA/TIA-942 – Telecommunication Infrastructure Standards for Data Centers
14. FCC – Part 67, for Communications Interconnection Devices
15. TIA/EIA-598 – "Optical Fiber Cable Color Coding"
16. ANSI/NFPA-70B – "Recommended Practice for Electrical Equipment Maintenance" pertaining to installation of cable tray systems.
17. National Electrical Manufacturers Association (NEMA) "NEMA VE-2"
18. University of Connecticut Telecommunication Design Guidelines and Standard dated April 2011.

1.4 SCOPE OF WORK

A. These specifications and drawings describe the minimum requirements that must be met by the Contractor for all work as specified herein for the furnishing and installation of the Telecommunications (voice, data, wireless and CATV, Security Cameras and AV pathways) cabling and associated hardware. Upon award of a contract for the work as described herein, the Contractor assumes all liability for a complete and functioning structured cabling system, including all quantities, materials, labor, project management, documentation, labeling and warranty of the work.

1. The Contractor is to furnish and install all horizontal distribution cabling and horizontal distribution cable terminations within each Intermediate Distribution Frame (IDF) Rooms and Building Entrance Facility (BEF) and as required herein and on the Contract Documents.

2. The Contractor is to furnish and install all intrabuilding backbone cabling and intrabuilding backbone cable terminations within each IDF and BEF and as required herein and on the Contract Documents.
3. The Contractor is responsible for labeling all cables at both ends of the cable and termination hardware and as follows:

    a. Faceplates and port positions shall be properly labeled and shall correlate exactly with the patch panel position labeling within IDF's and BEF. Confirm proper labeling scheme with UConn UITS prior to cable installation.
    b. Wiring block and connector housing positions shall be properly labeled and shall correlate exactly with wiring block and connector housing positions at associated IDF's and BEF.
    c. All faceplates, patch panels, connector housings, wiring blocks, equipment racks and port/connector positions and pathway systems shall be labeled for a complete administration system. Coordinate with UConn UITS for proper labeling scheme.

B. The Contractor will furnish and install the cable infrastructure, subsystems and all associated hardware necessary to provide a workable and fully compliant Structured Cabling System, as described in these specifications and in the drawings, and to the satisfaction of the Owner.

C. The Contractor shall label all cable at both ends and at the communication outlets and cross-connects, in accordance with ANSI/EIA/TIA Standards and as specified herein.

D. The Contractor shall test all copper cable (Category 6, Category 3 high pair count, coaxial station and coaxial hardline cable and all fiber optic cables in accordance with ANSI/EIA/TIA Standards and manufacturer specifications, as specified herein.

E. Drawings and Specifications form complimentary requirements; provide work specified and not shown, and work shown and not specified as though explicitly required by both. Provide all supplementary and miscellaneous items, appurtenances, devices and materials necessary for a sound secure and complete working system installation.

F. The specifications and drawings describe the minimum requirements that must be met by the Contractor for the installation of all work.

G. The work under this Contract shall include all labor, materials, tools, equipment, transportation, insurance, temporary protection, supervision and incidental items essential for proper installation and operation, even though not specifically mentioned or indicated on the drawings, but which are usually provided or are essential for proper installation and operation, of all systems as indicated on the drawings and specified herein.

H. The Specifications and Drawings describe the minimum requirements that must be met by the Contractor for the installation of all work as shown on the drawings and as specified herein.

I. The following general systems and equipment shall be provided as a minimum, for the new building and renovated areas of the existing building, including but not limited to the following:

1. Provide intra-building backbone cabling system. Category 3 Voice and Tie Cable Backbone, Singlemode Fiber Optic Data Backbone and Coaxial Hardline CATV Backbone
2. Provide horizontal cabling system. (Voice, Data, Wireless LAN, CATV)
3. Category 6 Patch Panels
4. Wiring blocks and cable distribution backboards (wall-mounted 110 System)
5. Pathways and spaces
6. Grounding and bonding
7. Cable management hardware
8. Equipment racks
9. Pull string
10. Hook and loop cable management
11. Nameplates and labeling
12. Fire seal and fire stopping
13. Testing of all cabling systems
14. Supervision and approval
15. Shop drawings
16. As-built documentation

1.5 GUARANTEE

A. Refer to provisions of the General Requirements and Supplementary General Requirements regarding guarantees and warranties for work under this Contract.

B. In addition to the specific guarantee requirements of the General Conditions, the Contractor shall obtain, in the Owner's name; the standard written manufacturer's guarantee of all materials furnished under this Section where such guarantees are offered in the manufacturer's published product data. All these guarantees shall be in addition to, and not in lieu of, other liabilities which the Contractor may have by law or other provisions of the Contract Documents.

C. The Contractor shall be thoroughly familiar with the cabling methods set forth in the latest release of the BICSI TDMM (Building Industry Consulting Services International, Telecommunications Distribution Methods Manual) and shall be recognized by BICSI as being a certified installer of structured cabling systems.

D. All installer certifications shall be current. Contractor shall also show proof of continuously maintaining the installation certifications for a minimum of one (1) year.

E. The structured cabling system shall at minimum guarantee functionality for 10/100/1000/10,000 Mb/s Ethernet applications.

F. The Contractor will leave the entire installed wiring system in proper working order and shall, without additional charge, replace any work, materials or equipment furnished and/or installed by him under this contract which develops defects, except from ordinary wear and tear, within one year from the date of acceptance by the Owner.

G. Manufacturers shall provide their standard guarantees for work under the Trades. However, such guarantees shall be in addition to, and not in lieu of, all other liabilities which the manufacturer and Contractor may have by law or by other provisions of the Contract Documents.

H. The Contractor shall guarantee that all elements of the systems which are to be provided under his Contract are of sufficient capacity to meet the specified performance requirements as set forth herein or as indicated.

I. Upon receipt of notice from the Owner's representative or Architect of failure of any part of the systems or equipment during the guarantee period, the affected part or parts shall be replaced by the Contractor for his work or any other work affected by the failure(s).

J. The Contractor shall furnish, before the final payment is made, a written guarantee covering the Hubbell and Corning Cable Systems warranty above requirements.

1.6 THE CONTRACTOR

A. The Contractor shall visit the site of the proposed New Engineering Science Building Site and base his/her bids from his/her own site examinations and estimates. The Contractor shall not hold the Architect, Engineer, Owner's representative or their agents or employees responsible for, or bound by, any schedule, estimate or of any plan thereof. The Contractor shall study the complete set of Contract Documents included under this Contract to determine exactly the extent of work provided under this Contract, as well as to ascertain the difficulty to be encountered in performing the work, in installing new equipment and systems and coordinating the work with the other Trades and existing building conditions.

B. The Contractor shall faithfully execute his/her work according to the terms and conditions of the Contract and specifications, and shall take all responsibility for and bear all losses resulting to him/her in the execution of his work.

C. The Contractor shall be responsible for the location and performance of work provided under his/her Contract as indicated on the Contract Documents. All parties employed directly or indirectly by the Contractor shall perform their work according to all the conditions as set forth in these specifications.

D. The Contractor shall furnish all materials and do all work in accordance with these specifications, and any supplementary documents provided by the Architect.

E. The work shall include everything shown on the drawings and/or required by the specifications as interpreted by the Architect, regardless of where such information is indicated in the Contract Documents (Architectural, HVAC, Plumbing, Fire Protection, etc.). Unless specifically indicated otherwise, all work and materials furnished and installed shall be new, unused and of the best quality and workmanship.

F. The Contractor shall cooperate with the Architect so that no error or discrepancy in the Contract Documents shall cause defective equipment or materials to be used or poor workmanship to be performed.

1.7 COORDINATION OF WORK

A. The Contractor shall compare his/her drawings and specifications with those of other Trades as well as the Architectural drawings and specifications, and report any discrepancies between them to the Architect and obtain from the Architect written instructions for changes necessary in the work.

B. Coordinate work with that of all other Trades affecting or affected by the work of this Section. Cooperate with such Trades to assure the steady progress of all work under the Contract.

C. All work shall be installed in cooperation with other Trades installing interrelated work. Before installation, Contractor shall make proper provisions to avoid interferences in a manner approved by the Architect. All changes required in the work of the Contractor or that of any other trade caused by the Contractor's neglect, shall be made by him at his own expense, to the Architect's satisfaction.

D. The Contractor must include in his/her bid sufficient dollar amounts to coordinate the work of this Contract. This project is complex and will require additional time to coordinate all Trades and allow implementation of the Owners Standards and maintenance serviceability requirements. This requirement shall include, but not be limited to, producing the coordination drawings, as many times and as many drawings as required, to ensure serviceability of equipment, as approved by the Architect.

E. Locations of conduits, boxes distribution equipment, systems, etc. shall be adjusted to accommodate the work with interferences anticipated and encountered. The Contractor shall determine the exact routing and location of his/her systems prior to fabrication or installation of any system component. Accurate measurements and coordination drawings shall be completed to verify dimensions and characteristics of the various systems installations.

F. Lines which pitch shall have the right-of-way over those which do not pitch. For example, steam piping shall normally have the right-of-way. Lines whose elevations cannot be changed shall have the right-of-way over lines whose elevations can be changed.

G. Offsets, transitions and changes of direction in all systems shall be made as required to maintain proper headroom and pitch of sloping lines whether or not indicated on the drawings. The Contractor shall provide elbows, conduit sweeps, etc. as required for his work to affect these offsets, transitions and changes in direction. Maintain raceway requirements for length, maximum allowable changes in direction, bend radius and pull box access.

H. All work shall be installed in a way to permit removal (without damage to other parts) of pull and junction box covers, access panels, and all other system components provided under this Contract requiring periodic replacement or maintenance. All pull and junction boxes shall be arranged in a manner to clear the openings of swinging overhead access doors as well as ceiling tiles. All work shall be done to allow easy access for maintaining equipment. The Owner and Engineer will require proof via the preparation of large scale sections and part plans that pull and junction boxes, etc. are accessible after the work is completed. Any items in the field discovered to be in non-compliance shall be removed and relocated, as required, and as directed by the Architect.

I. The Contract Drawings are diagrammatic only intending to show general runs and locations of conduits, distribution equipment, systems devices and equipment, etc. and not necessarily showing all required offsets, details and accessories and equipment to be connected. All work shall be accurately laid out with other Trades to avoid conflicts and to obtain a neat and workmanlike installation which will afford maximum accessibility for operation, maintenance and headroom. The Contractor shall ensure that conduit raceways, trays and cable distribution segments do not exceed the maximum specified performance parameter for permanent link horizontal distribution (295’-0”).

J. Where discrepancies in scope of work as to what Trade provides items, such as conduits, boxes, cable trays, backboards, sleeves, firestop, grounding, etc., exist, such conflicts shall be reported to the Architect during bidding and prior to signing of the Contract. If such action is not taken, the Contractor shall furnish such items as part of his work as necessary, for complete and operable systems and equipment, as determined by the Architect.

K. The Contractor shall coordinate the installation of all equipment and any catwalks or service platforms provided.

L. Where drawing details, plans, specification requirements and/or scheduled equipment capacities are in conflict and where equipment are shown to be different between plans and/or between plans and riser diagrams, details or specifications, the most stringent requirement will be included in the Contract. Communications systems and equipment called for in the specification and/or shown on the drawings shall be provided under this Contract as if it were required by both the drawings and specifications. However, prior to ordering or installation of any portion of work which appears to be in conflict, such work shall be brought to Architect's attention for direction as to what is to be provided.

M. Final location of all fixtures, devices, outlets, faceplates, pushbuttons, etc., shall be coordinated with the Architectural reflected ceiling plans, architectural elevations, and/or other Architectural details, as applicable and shall not be scaled from locations indicated on the Communications or Telecommunications drawings. Obtain approval of locations of all devices from Architect in the field. The Owner/Architect reserves the right to relocate any receptacle, device, fixture, etc. 10'-0" in any direction prior to installation at no additional cost to the Project.

N. The Contractor shall coordinate his/her work with other Trades' work so that all equipment and systems can be easily, safely and properly serviced and maintained. It is imperative that service personnel can safely access all equipment. Provide safety rails, steps, ladders, handle extensions, etc. as required, in addition to the ones shown on the drawings, to ensure safe and easy access to all equipment is provided in a manner approved by the Architect.

1.8 GIVING INFORMATION

A. The Contractor shall keep himself/herself fully informed as to the shape, size and position of all openings required for his apparatus and shall give information to the General Contractor and other Subcontractors sufficiently in advance of the work so that all openings may be built in advance.

1.9 EQUIPMENT AND MATERIALS

A. Equipment shall be tightly covered and protected against dirt, water, and chemical or mechanical injury and theft. At the completion of the work, equipment and materials shall be cleaned and polished thoroughly and turned over to the Owner's representative in a condition satisfactory to the Architect. Damage or defects that develop before acceptance of the work shall be made good at the Contractor's expense.

B. The Contractor shall make necessary field measurements to ascertain space requirements, for equipment and connections to be provided under his respective Trade and shall furnish and install such sizes and shapes of equipment to allow for the final installation to conform to the Drawings and Specifications.

C. The Contractor shall furnish and install all equipment, accessories, connections and incidental items necessary to fully complete the work under his/her Contract for use, occupancy and operation by the Owner's representative.

D. Where equipment of a substitute manufacturer differ from that specified and require different arrangement or connections from those shown, it shall be the responsibility of the Contractor responsible for the substitution to modify the installation of the equipment to operate properly and in harmony with the original intent of the drawings and specifications. When directed by the Architect, the Contractor shall submit drawings showing the proposed, substitute installation. If the proposed installation is approved, the Contractor shall make all necessary changes in all affected related work provided under his and other Sections including location of roughing-in connections by other Trades, conduit, supports, etc.

All changes shall be made at no increase in the Contract amount or additional cost to the Owner's representative. The General Contractor shall be responsible to assure that the Contractor responsible for the substitution bears the cost arising to all other Trades as a result of the substitution.

E. Unless specifically indicated otherwise, all equipment and materials required for installation under these specifications shall be new, unused and without blemish or defect. Equipment and materials shall be products which will meet with the acceptance of the Authorities having jurisdiction over the work and as specified hereinbefore. Where such acceptance is contingent upon having the products listed and/or labeled by FM or UL or another testing laboratory, the products shall be so listed and/or labeled. Where no specific indication as to the type or quality of material or equipment is indicated, a first class standard article shall be provided.

F. All equipment of one type, such as cabling, wiring blocks, faceplates, outlets connectors, protection etc., shall be the products of one manufacturer and shall be acceptable by the manufacturer governing the warranty/certification for the entire Structured Cabling and Fiber Optic Cabling System.

1.10 USE OF PREMISES

A. The Contractor shall confine all apparatus, storage of materials and construction to the limits as directed by the Architect and/or General Contractor and he/she shall not encumber the premises with his/her materials. The Contractor shall be held responsible for repairs, patching, or cleaning arising from any unauthorized use of premises.

B. Notwithstanding any approvals or instructions which must be obtained by the Contractor from the Architect and/or General Contractor in connection with the use of the premises, the responsibility for the safe working conditions at the site shall remain that of the Contractor. The Architect, Engineer or Owner's representative shall not be deemed to have any responsibility or liability in connection with safe working conditions at the site.

1.11 PROTECTION

A. The Contractor shall furnish, place and maintain proper safety guards for the prevention of accidents that might be caused by the workmanship, materials, equipment or telecommunications systems provided under his Contract.

1.12 DAMAGE TO OTHER WORK

A. The Contractor shall be held responsible and shall pay for all damages caused by his/her work to the building structures, equipment, conduits, systems, etc., and all work and finishes installed under this Contract. Repair of such damage shall be done by the General Contractor at the expense of the Contractor, to the Architect's satisfaction.

1.13 CORRECTION OF WORK

A. The Contractor shall promptly correct all work provided under his Contract and rejected by the Architect/Owner's representative as defective or as failing to conform to the Contract Documents, whether observed before or after completion of work, and whether or not fabricated, installed or completed.

1.14 EXTRA WORK

A. No claim for extra work will be allowed unless it is authorized by the Architect before commencement of the extra said work.

1.15 FIRESTOPPING, SMOKEPROOFING AND WATERPROOFING

A. All openings shall be sealed, smokeproofed and made tight. The Division 26 Contractor shall be responsible for the exact location of sleeves provided under this Contract and shall coordinate all requirements for conduit sleeves. Refer to Specification Section 078413 "Through-Penetration Firestopping System".

B. The Contractor shall review firestop or smokestop systems provided under Section 078413 "Through-Penetration Firestopping System".

C. Except as otherwise specified, underground piping passing through exterior walls, foundation slabs on grade, or manhole walls, shall have penetration closures of the modular mechanical type, consisting of interlocking synthetic rubber links shaped to continuously fill the annular space between the conduit and wall opening. Links shall be loosely assembled with bolts to form a continuous belt around the conduit and with a pressure plate under each bolt head and nut.

D. After the seal assembly is positioned in the sleeve, tightening of the bolts shall cause the rubber sealing elements to expand and provide an absolutely watertight seal between the conduit and wall, reducing chances of cathodic reaction between these members.

E. Tyco Raychem Rayflate Duct Sealing Systems shall be used to seal and waterproof incoming Telecommunication ductbanks. Coordinate with UConn UITS

1.16 CONNECTIONS TO ARCHITECTURAL MILLWORK, MODULAR FURNITURE AND/OR OWNER FURNISHED EQUIPMENT

A. The Division 26 Contractor shall provide all conduit connections and/or backbox devices to equipment provided under other sections of the Specifications, as required, resulting in a complete system, fully operational.

B. Coordinate location of all equipment with the General Contractor and Architect prior to installation. Obtain installation diagrams and methods of installation of all equipment, from manufacturers. Follow instructions explicitly. Obtain additional information from the Architect if required.

C. All connections that transition to isolated casework, furniture etc. that cannot be concealed from view as determined by the Architect, shall utilize an appropriate sized (inside diameter) "Tech Flex Nylon Braiding". Each flexible shall be 24-inches in length maximum. All such connections shall be approved by the Architect prior to installation and be provided by Division 27 Contractor.

1.17 COORDINATION DRAWINGS

A. Before materials are purchased, fabricated or work is begun, each Subcontractor shall prepare and obtain approval of coordination drawings, and sections for all floors/areas, including buried system/services, resulting in (1) set of all-Trade-composite at 3/8" scale drawings, showing the size and location of all equipment, in the manner described herein and in the General Requirements. Architects review and approval of coordination drawings must be obtained prior to any fabrication or installation of any equipment or systems.

B. All costs associated with all aspects of coordination drawings, regardless as to how long they take to produce and how many times they have to be redrawn, shall be borne by the Contractor.

C. The Contractor shall be responsible for coordinating the AutoCAD and/or REVIT coordination drawings, including, but not limited to, the drawing lists, layering system, producing copies of the drawings for the Architect as directed, etc.

1.18 RECORD DRAWINGS/AS-BUILT DRAWINGS

A. The Contractor shall maintain current at the site a set of his/her drawings on which he/she shall accurately show the actual installation of all work provided under his Contract indicating hereon any variation from the Contract Drawings.

B. The Contractor shall indicate progress by coloring-in various conduits, equipment and associated appurtenances exactly as they are erected. This process shall incorporate both the changes noted above and all other deviations from the original drawings whether resulting from job conditions encountered or from any other causes.

C. The marked-up and colored-up prints will be used as a guide for determining the progress of the work installed. They shall be inspected periodically by the Architect and Owner's representative and they shall be corrected immediately if found either inaccurate or incomplete. This procedure is mandatory.

D. As-built drawings shall indicate actual locations of voice and data communication devices, with distribution and backbone cable routes and unique and sequential labeling of all devices and terminations.

E. At the completion of the job, these prints shall be submitted to the General Contractor and then to the Architect for final review and comment. The prints will be returned with appropriate comments and recommendations. These corrected prints, together with corrected prints indicating all the revisions, additions and deletions of work, shall form the basis for preparing a set of As-built Record Drawings.

F. The Contractor shall be responsible for generating as-built Record Drawings utilizing CAD based documents in AutoCAD Revit Model format. A bound set of plans, as well as the computer files, on CDs, shall be turned over to the Architect for review. After acceptance of the as-built documents by the Architect, the Contractor shall make any corrections necessary to the as-built documents and prepare one reproducible set of drawings (quantity as determined by the Architect) for distribution to the Owner's representative via the Architect.

G. Included with the above shall be a complete drawing list and a standard layering system, which shall be required to be maintained within the as-built Record CAD documents.

H. The as-built CAD documents required shall be in addition to other requirements stated elsewhere.

1.19 RELATED WORK SPECIFIED ELSEWHERE

A. For work to be included as part of this Section, to be furnished and installed by the Contractor, refer to the following Sections:

1. Installation of access panels by Trades as determined by the General Contractor
2. Cutting and patching in masonry
3. Finish painting
4. Fire Protection
5. Electrical Special Conditions
6. Basic Materials and Methods
7. Wiring Methods

1.20 SUBMITTALS

A. Prepare and submit a complete set of shop drawings in accordance with the requirements hereinbefore specified, and with the Shop Drawings, Product Data and Samples Section 01300 in the manner described therein, modified as noted hereinafter. Partial shop drawing packages will not be accepted by the Engineer.

B. Submit a complete set of manufacturers product and data sheets of all materials and systems to the Architect for approval, consisting of complete product description and specifications, complete performance test data, complete preparation and installation instructions, and all other pertinent technical data required for complete product and use information. Partial submittal packages will not be accepted by the Engineer.

C. All shop drawings shall have clearly marked the appropriate specification number of drawing designation for identification of the submittal.

D. Disposition of shop drawings shall not relieve the Contractor from the responsibility for deviations from drawings or specifications unless he/she has submitted in writing, a letter itemizing or calling attention to such deviation at the time of submission and secured written approval from the Engineer, nor shall such disposition of shop drawings relieve the Contractor from responsibility for errors in shop drawings or schedules.

E. The Contractor shall show proof of having a sufficient number of trained personnel on staff for structured cabling, fiber optic cabling, and connector installation as required by the specific manufacturer of equipment being provided for by the Contractor.

F. The Contractor shall show proof of membership in a certified cabling installation program and must warranty the cabling system specified herein, for a minimum of 25 years. Warranty shall be Hubbell Mission Critical Extended Warranty Program for the Category 6.

G. The Contractor shall show proof of membership in a certified Fiber Optic cabling installation program and must warranty the Fiber Optic cabling system herein for a minimum of 25 years. Warranty shall be Corning Cable Systems LanScape for Fiber Optic Systems.

H. Do not order materials or begin installation until written approval of submittals by the Architect and Engineer has been obtained.

I. Submittals shall contain information specific to systems, equipment and materials required by Contract Documents for this project only. Do not submit catalogs that describe products, models, options or accessories other than those required, unless irrelevant information is marked out or unless relevant information is highlighted clearly.

J. Intent of Submittal review is to check for capacity, rating and certain construction features. Contractor shall ensure that work meets requirements of Contract Documents regarding information that pertains to fabrication processes or means, methods, techniques, sequences and procedures of construction and for coordination of work of this and other Sections. Work shall comply with submittals marked “REVIEWED” to extent that they agree with Contract Documents. Submittal review shall not diminish responsibility under this Contract for dimensional coordination, quantities, installation, wiring, supports and access for service, nor the shop drawing errors or deviations from requirements of Contract Documents. The Engineer’s noting of some errors while overlooking others will not excuse the contractor from proceeding in error. Contract Documents requirements are not limited, waived nor superseded in any way by review.

K. All shop drawings shall have clearly marked the appropriate specification number of drawing designation, for identification of the submittal. All products shall be highlighted or have indicating arrows. Partial shop drawing and submittal package will not be accepted by the Engineer.

PART 2 – PRODUCTS

2.1 GENERAL

A. All products shall meet applicable NEMA, ANSI and UL, FCC and IEEE Standards.

B. Refer to Drawings for outlet locations, service types, and configurations required.

C. All products shall be "NEW".

D. Category 6 Structured Cabling System shall be by Hubbell or approved equal.

E. Fiber Optic Backbone Cabling Systems shall be Corning Cable Systems or approved equal.

F. Coaxial Hardline and coaxial station cable shall be Commscope or approved equal.

G. Approved manufacturer's equals are as follows:

1. Structured Horizontal Cabling System

   a. Hubbell
   b. Leviton
   c. Ortronics

2. Fiber Optic Backbone System

   a. Corning Cable Systems
   b. Hubbell
   c. Leviton

3. Coaxial CATV Backbone and Horizontal Cabling (Both systems shall be same manufacturer)

   a. Commscope
   b. Belden
   c. Superior Essex

4. Category 3 High Pair Count

   a. General
   b. Superior Essex
   c. Belden

5. Communication Equipment Rack and Cable Runway (Both systems shall be same manufacturer)

   a. Chatsworth Products Inc. (CPI)
   b. B-Line

c. Hoffman

6. Wirebasket Cable Tray

a. Cablo-Fil Legrand US Cablo-Fil
b. Flextray Copper/B Line Flex-Tray
c. On-Trac Chatsworth Product Inc. On-Trac

7. Non-Continuous Cable Support Systems “J Hooks”

a. Caddy-Erico
b. Copper-B-Line
c. Mono-Systems

8. Ground Bars

a. Chatsworth Products, Inc.
b. EricoInternational Corporation
c. Harger Lighting Protection, Inc.

2.2 CABLING

A. General

1. Manufacturer's cable markings shall consist of manufacturer's name, cable type/catalog No., NFPA type code compliance, and the NEC code compliance.
2. All cable shall be listed for its use per NEC Article 800.
3. All cables shall meet performance specifications as required herein, with regards to ANSI/TIA/EIA 568-C.
4. All optical fibers in each cable shall be usable and each optical fiber shall be sufficiently free of surface imperfections and inclusions in order to meet the optical, mechanical and environmental requirements of this specification.
5. Singlemode optical fiber shall meet EIA/TIA-492CAAA, “Detail Specification for Class IVa Dispersion-Unshifted Single-Mode Optical Fibers,” and ITU recommendation G.652, “Characteristics of Single-Mode Optical Fiber Cable.”

a. Maximum dispersion at 1310 nm wavelength shall be 2.8 PS/nm*km.
b. Maximum dispersion at 1550 nm wavelength shall be 18 PS/nm*km.

6. The maximum tensile load on optical fiber cable during installation shall not exceed the following:

a. 180 lbf for 6-strand cables
b. 250 lbf for 12 or 24-strand cables
c. 900 lbf for 36-strand cables

7. The maximum tensile loading of the installed fiber optic cable shall not exceed the following:

    a. 45 lbf for up to 6-strand cables
    b. 84 lbf for 12 or 24-strand cables
    c. 450 lbf for 36-strand cables

8. The minimum bend radius on the fiber optic cable during installation shall not exceed the following:

    a. 2.8-inches for up to 6-strand cables
    b. 3.9-inches for 12 or 24-strand cables
    c. 9.0-inches for 36-strand cables

9. The minimum bend radius on the installed fiber optic cable shall not exceed the following:

    a. 1.9-inches for 6-strand cables
    b. 2.4-inches for 12 or 24-strand cables
    c. 6-inches for 36-strand cables

10. All 4-pair Unshielded Twisted Pair (UTP) Category 6 copper distribution cabling shall be 23 AWG solid bare copper, 100-Ohm with ripcord and shall be terminated using the ANSI/TIA/EIA-568-C, T568B wiring scheme and pin-out configuration.

    a. Electrical performance – maximum attenuation at 550 MHz frequency shall not exceed 40 dB/100m.
    b. UTP cable shall be UL type CMP, plenum rated or OSP rated.
    c. Minimum bend radius shall be 1-inch.
    d. Maximum pulling tension shall be 25 lbs.

B. Horizontal Distribution

1. 4-Pair Unshielded Twisted Pair (UTP)

    a. Data grade Horizontal Distribution cable shall exceed ANSI/TIA/EIA Category 6 requirements and shall be ETL Verified for electrical performance, and shall be as manufactured by Hubbell Nextspeed 4 pair Category 6 or "Hubbell Mission Critical Extended Warranty Program" structured cabling partner.
    b. The cable sheaths used shall be as follows:

        1) Hubbell P/N is C6ESPW White Jacket

2. 4-pair Unshielded OSP Twisted Pair (UTP)

   a. Data grade horizontal distribution cable shall exceed ANSI/TIA/EIA Category requirements and shall be ETL-verified for electrical performance and shall be as manufactured by Superior Essex 4-pair OSP Category 6.
   b. Superior Essex P/N is 04-001-68.

3. Coaxial

   a. RG6 CATV, 75-Ohm cable with 18 AWG copper-clad steel center conductor with foam dielectric, Quad Shield, 100% foil shield and 40% braid shield coverage under a plenum-rated jacket CommScope, P/N is 2227V.
   b. Installer shall terminate horizontal RG-6 cable at TV outlet and at the TR with a Corning/Gilbert compression type F-connector for quad shielded plenum-rated coax cable. Corning/Gilbert P/N is GF-UR-6-PL.

4. Fiber

   a. 4-Strand Singlemode Fan-Out Tight-Buffered, CMP Rated cable shall be 2.9 mm sub units type, Corning Cable System P/N is 004E68-31131-29.

C. Intrabuilding Backbone (Copper, Fiber, CATV)

1. Multi-pair Unshielded Twisted Pair (UTP)

   a. Voice grade cable shall be 100-pair, 24 AWG, plenum rated (CMP), Category 3 type multi-conductor cable, General P/N is 2131758.

2. Optical Fiber Cables

   a. 24-Strand Singlemode Fiber Optic Armored cables shall be 900µm tight buffered CMP-rated outer jacket, Corning Cable System P/N is 024E88-33131-A3.

3. Coaxial

   a. 75-Ohm coaxial cable with copper clad aluminum center conductor, expanded polyethylene dielectric and continuous aluminum outer conductor CMP-rated outer jacket shall be PIII CommScope ½ Hardine Cable, P/N is 2312V.

D. Quantity

1. Horizontal Distribution

a. The Contractor shall provide one (1) 4-pair Category 6 cable to each designated telecommunication outlet port location as indicated on the Drawings and as specified herein. All eight conductors shall be terminated at both ends.
b. The Contractor shall provide one (1) RG-6 coaxial cable to each designated multimedia (CATV) outlet port location as indicated on the Drawings and as specified herein. Coaxial cable shall be terminated with compression style F-connectors at both ends.
c. The Contractor shall provide one (1) 4-strand fiber optic cable to the designated FACP outlet as indicated on the drawings and as specified herein. Cable shall be terminated with Corning LC Unicam Connectors on both ends.

2.3 TELECOMMUNICATION OUTLETS

A. General

1. Each faceplate shall be the same color and height above the floor as the electrical faceplate. All outlets/faceplates shall be provided with "machine-generated" labels. Handwritten labels will not be accepted. All telecommunication outlet identification shall be labeled using approved UCONN UITS labeling standards. The Contractor shall coordinate exact labeling scheme and nomenclature with the UCONN UITS Technology prior to installation.
2. All work area outlet faceplates shall utilize Category 6, 8-position, 8-conductor type modular jacks, CATV "F" Insert and Duplex SM LC modular jacks. Modular jacks shall be color coded and coordinate color with electrical faceplate color and as shown on Drawings, unless otherwise specified.
3. Hubbell P/N is HXJ6XX (Data, ESS) (Coordinate color with electrical faceplate color) (Category 6 Insert).
4. Hubbell P/N is HXJ6BL (BAS Patch Panel Only) (Category 6 Insert).
5. Hubbell P/N is SFF3GXX (F-Connector Insert). (Coordinate color with electrical faceplate color).
6. Hubbell P/N is SFFLCSXX (Faceplate) (LC Duplex Insert). (Coordinate color with electrical faceplate color).
7. Hubbell P/N is SFFLCSBL (Patch Panel) (LC Duplex Insert)

B. Wall Mounted Wall Phone

1. Each Voice only outlet used for wall mounted telephone locations shall consist of one (1) single gang, single port, stainless steel faceplate with integral telephone device mounting tabs. Hubbell wall mount telephone outlet with Category 6 jack insert.
2. Hubbell P/N is P630SR1GC6.

C. Standard 4-Port Wall Mounted Telecommunication Outlet

1. Each standard work area outlet shall consist of one (1) single gang, flush mounted, GFCI Style mounting bracket and faceplate manufactured by Hubbell with four (4) Hubbell Category 6 modular inserts. (Coordinate color with electrical faceplate color).
2. Hubbell P/N is ISF4XX and IFP126XX.

D. Standard 3-Port Wall Mounted Telecommunications Outlet

1. Each standard work area outlet shall consist of one (1) single gang, flush mounted, GFCI Style mounting bracket and faceplate manufactured by Hubbell with three (3) Hubbell Category 6 modular inserts. (Coordinate color with electrical faceplate color).
2. Hubbell P/N is ISF3XX and IFP126XX.

E. 2-Port Wall Mounted, Lab Bench, Video Conference**,** Wall-Mounted Wireless LAN**,** BAS, Elevator Telecommunications Outlet, Projector Outlet

1. Each 2-port work area outlet shall consist of one (1) single gang, flush mounted, 2-port GFCI Style mounting bracket and faceplate manufactured by Hubbell with two (2) Hubbell Category 6 modular inserts. (Coordinate color with electrical faceplate color).
2. Hubbell P/Ns are ISF2XX and IFP126XX.

F. 3-Port Audiovisual Floor Box Device or Audiovisual Poke-Thru Mounted Telecommunication Outlet

1. Each floor-mounted poke-thru shall have three (3) Hubbell Category 6 inserts. Coordinate with floorbox/poke-thru manufacturer for proper bezel, adapter, etc.
2. Hubbell P/N is ISF3XX and IFP 126XX. (Coordinate color with electrical faceplate color).

G. 4-Port Floorbox Device or Pokethru-Mounted Telecommunication Outlet

1. Each standard work area outlet shall consist of one (1) single gang flush-mounted 4 port GFCI style mounting bracket and faceplate manufactured by Hubbell with four (4) Hubbell Category 6 modular inserts. (Coordinate color with electrical faceplate color). Coordinate with floorbox/poke-thru manufacturer for proper bezel adapter, etc.

H. 2-Port Ceiling Wireless LAN Telecommunication Outlet

1. Each 2-port wireless LAN, Telecommunications Outlet shall consist of 2-port surface-mounted box manufactured by Hubbell with two (2) Hubbell Category 6 modular inserts. (Coordinate color with electrical faceplate color).
2. Hubbell P/N is ISM2XX.

I. 2-Port Wall-Mounted TV Outlet

1. Each 2-port TV outlet shall consist of one (1) single gang, flush-mounted GFCI Style faceplate manufactured by Hubbell with one (1) Hubbell "F" insert and one (1) Hubbell Category 6 modular insert.
2. Hubbell P/Ns are ISFW2XX, IFP126XX. (Coordinate color with electrical faceplate color).

J. 1-Port IP Camera

1. Each 1-port IP Camera outlet shall consist of one (1) 2-port surface-mounted box manufactured by Hubbell with one (1) Hubbell Category 6 modular insert and one (1) Hubbell Blank Insert.

   a. Hubbell P/N is ISM2XX (Coordinate color with electrical faceplate color).

K. FACP Telecommunication Outlets

1. Each FACP work area outlet shall consist of one (1) double gang flush-mounted, GFCI Style faceplate manufactured by Hubbell with four (4) Hubbell Category 6 modular inserts and two (2) Hubbell LC SM modular inserts.
2. Hubbell P/N is ISF4XX, NP262XX. (Coordinate color with electrical faceplate color).
3. Wiremold P/N is 2344SD-2 (within FACP panel).

L. AV Wall-Mounted Telecommunications Outlet

1. Each AV work area outlet shall consist of one (1) double-gang flush-mounted GFCI Style faceplate by Hubbell with six (6) Hubbell Category 6 modular inserts and one (1) "F" Style modular insert.
2. Hubbell P/N is ISF4XX and NP262XX. (Coordinate color with electrical faceplate color).

2.4 FIBER OPTIC HARDWARE

A. 2RMU Fiber Optic termination housing shall hold 4 modules. Corning P/N is CCH-02U.

B. 4RMU Fiber Optic termination housing shall hold 12 modules. Corning P/N is CCH-04U.

C. 12F SC/APC Singlemode Closet Connection Housing Splice Cassette with 2M single fiber 250 µM Pigtails. Corning P/N is CCH-CS12-D9-P00RE.

D. SM No Epoxy/No Polish LC Unicam Connector, Corning P/N is 95-200-99.

2.5 PATCH PANELS

A. UTP Horizontal Distribution

1. The Contractor shall provide 2-RMU rack mounted 48-port, modular patch panels for the purpose of terminating Horizontal, Tie Cable and Camera distribution cabling. 48-port patch panels shall be Category 6, 110 style with IDC type contacts and universal T568A/T568B wiring. Hubbell P/N is P6E48U.
2. The Contractor shall provide 2-RMU rack-mounted 48-port, plug and play patch panel for the purpose of terminating the BAS horizontal distribution cabling and 4-strand FACP Fiber Optic Cable. Hubbell P/N is UDX48E.
3. Provide color coded icons and labeling strip for each port position at the front and rear of each panel. Port position icon colors shall correspond with work area jack colors.
4. Each 48-port shall be equipped with rear 19" cable management bar. Hubbell P/N is CMBR.

2.6 WALL MOUNTED TERMINATION BLOCKS

A. All voice grade Intrabuilding Backbone Distribution cables, and cable pairs within the IDF and BEF shall terminate on wall mount backboard system with Category 5E, 300-pair, 110 style wiring blocks with legs, manufactured by Hubbell. Each cable pair shall be sequentially terminated on the appropriate block position with labeling.

1. Provide wall mounted cable management at each wiring block column as indicated on the drawings manufactured by Hubbell.
   a. Hubbell P/N is 110BLK300FTK5 (Riser Cabling)
   b. Hubbell P/N is 110BLK300FTK4 (Tie Cabling)
   c. 188B2 wire manager backboard with legs. Systimax P/N is 104405113.

2.7 OUTDOOR RATED CATEGORY 6 LIGHTING PROTECTOR

A. UL Listed for primary isolated loop application; exceeds TIA/EIA Standard 568 and 758 for Cat 6 performance.

B. ITW-LINX P/N is CAT6-75-110 in / RJ45 out.

2.8 WALL MOUNT BACKBOARD (INTERMEDIATE DISTRIBUTION FRAMES)

A. Wall mounted backboards shall be void free, A/C grade, ¾" x 4' x 8' FRT plywood sheets, mounted vertically. Starting at 12" AFF, all plywood backboards will be painted with two (2) coats of fire-retardant, non-conductive, black paint.

B. Plywood backboards shall be rigidly installed, and permanently attached to the wall as shown on the telecommunications drawings and in accordance with Miscellaneous Carpentry Section of the Specifications. (Furnished and installed by Division 6).

2.9 EQUIPMENT RACKS

A. General

1. Where indicated on the Drawings, equipment racks shall be provided and installed for mounting cable terminations, LAN switches and concentrator hubs, and other equipment. Each equipment rack shall be epoxy-polyester hybrid black powder coat finish. Equipment racks shall be securely bolted to the floor at the base and fastened to the wall or an overhead support system that in turn is directly secured to a wall. Additional cable management devices, shelves, and other accessories shall be provided as specified herein an as shown on drawings.

B. Intermediate Distribution Frame

1. Dual Rail, free standing equipment racks shall be of high strength 6061-T6 aluminum extrusion construction. They shall be 84-inches tall and supplied with two top angles (1.5” x 1.5” x .250”) and two base angles (3.5” x 6.0” x .375”). Equipment rack base shall be pre-drilled for securing the rack to the floor. Equipment racks shall include assembly bolts, nuts, washers and mounting screws.
2. Equipment rack rails shall be of aluminum channel extrusion (1.265” x 6.0”) with a grained and deburred surface. Rails shall be spaced to allow 19” Electronics Industry Association (EIA) rack mounting width and shall have 12-24 rolled-formed mounting holes in a 5/8”-5/8”-1/2” EIA-310-D universal hole spacing providing 45 rack spaces on both the front and rear flanges. Flange thickness shall be 0.25” and web thickness shall be 0.17”. Rails shall have six web channel holes per side (one pair each at 4.0”, 43.0” and 66.0” Above Finished Floor) to enable multiple racks to be bolted together side-by-side or for the attachment of accessories.
3. Chatsworth Products P/N is 66353-703 or approved equal.

C. Building Distribution Room / ISG Server Room

1. Quad Rail, free standing equipment racks shall be of high-strength 6061-T6 aluminum extrusion construction. They shall be 84” tall and supplied with two top angles (1.5 x 1.5 x .250”) and two base angles (3.5 x 6.0 x .375). Equipment rack base shall be pre-drilled for securing the rack to the floor. Equipment rack shall include assembly bolts, nuts, washers and mounting screws.
2. Equipment rack rails shall be of aluminum channel extrusion (1.265” x 3.0”) with a grained and deburred surface. Rails shall be spaced to allow 19” Electronics Industry Association (EIA) rack mounting width and shall have 12-24 rolled-formed mounting holes in a 5/8”-5/8”-1/2” EIA-310-D universal hole spacing providing 45 rack spaces on both the front and rear flanges. Flange thickness shall be 0.25” and web thickness shall be 0.17”.
   Rails shall have six web channel holes per side (one pair each at 4.0”, 43.0” and 66.0” Above Finished Floor) to enable multiple racks to be bolted together side-by-side or for the attachment of accessories.
3. Chatsworth Products P/N is 50130-703 or approved equal.

2.10 CABLE MANAGEMENT

A. Provide double-sided vertical cable management at the dual rail equipment rack and as shown on the drawings. Vertical management shall be installed at each side of the vertical channel. Chatsworth P/N is 35521-703 (6”); P/N is 35523-703 (10”) or approved equal. (Intermediate Distribution Frame)

B. Provide single-sided vertical cable management at each quad rail equipment rack as shown on the drawings. Vertical management shall be installed at each side of the vertical channel front side only. Chatsworth P/N is 35513-703 (10”) or approved equal. (Building Entrance Facility Room).

C. All edges and pass-through openings shall be grommeted and the drawings shall have seven plastic latches evenly spaced for active cable administration.

D. Provide 2-RMU upper transition tray as shown on the drawings. Chatsworth P/N is 12183-719 or approved equal.

E. Provide 2-RMU horizontal wire manager as shown on drawings. Chatsworth P/N is 30130-719 or approved equal.

F. Wall mounted (backboards)

1. The Contractor shall provide one cable management backboard between each voice wiring block located on the wall mount backboard system and in accordance with the Drawings.

G. Hook and loop fastener tie wraps will be used exclusively for neatly bundling cables. Plastic cable ties will not be accepted.

2.11 CABLE RUNWAY SYSTEM

A. Where indicated on the Drawings, a cable runway system shall be provided and installed for cable support and routing. All cable runway system components within the IDF and BEF shall be Chatsworth Products Incorporated manufactured product (or approved equal) and are the responsibility of the Contractor.

B. Cable Runway within the telecommunication spaces shall be fastened directly to underside of decking on the floor above with 5/8” threaded rod (triangular support brackets are prohibited) and equipment racks as shown on detail drawings.

C. Contractor shall provide Cable runway and all necessary associated hardware for a complete installation.

D. All cable runway system components within the telecommunications spaces shall be Chatsworth Products Incorporated or approved equal manufactured product and shall be installed in accordance with manufacturer guidelines.

E. All necessary components for a complete and safe cable runway system are the responsibility of the Contractor and include but are not limited to the following:

1. UL Listed Classified Telco Style Cable Runway Product shall be Chatsworth P/N, 11275-718 or 11275-724 or approved equal.
2. Butt-splice kits shall be Chatsworth P/N, 16301-701 or approved equal.
3. Junction splice kits shall be Chatsworth P/N, 16302-701 or approved equal.
4. Adjustable butt splice kit shall be Chatsworth, P/N 16487-701 or approved equal.
5. Adjustable vertical splice kit shall be Chatsworth, P/N 16489-701 or approved equal.
6. Adjustable junction splice kit shall be Chatsworth, P/N 16488-701 or approved equal.
7. Cable runway elevation kit shall be Chatsworth, P/N 10506-706 or approved equal.
8. Wall angle support kit shall be Chatsworth, P/N 11421-718 or 11421-724 or approved equal.
9. Runway support brackets shall be Chatsworth, P/N 11408-003 or approved equal.
10. Vertical wall brackets shall be Chatsworth, P/N 10608-701 or approved equal.
11. Cable retaining past shall be Chatsworth, P/N 10596-706 or approved equal.
12. Cable runway radius drop out shall be Chatsworth, P/N 12100-718, 12100-724 or approved equal.
13. 3” Channel rack to runway mounting plate shall be Chatsworth, P/N 12730-718 or 13730-724 or approved equal.

2.12 RACEWAY SUPPORT SYSTEMS

A. General

1. Division 26 shall furnish and install a complete raceway support system for the voice and data system as specified herein and as shown on the drawings.
2. Additional requirements for the following equipment are included elsewhere in these specifications:

   a. Boxes
   b. Supports
   c. Mechanical Suspension Channel
   d. Conduit
   e. Sleeves
   f. Outlet Boxes

3. The completed system installation shall meet the approval of the Owners Telecommunications Departments and be in accordance with all applicable sections of the NEC.

B. Cable Tray System

1. Division 26 shall furnish and install a complete cable tray support system as specified herein and as shown on the drawings. Wire basket type support systems shall be as manufactured by Legrand Cablo-Fil or approved equal.

2. Provide wire basket of types and sizes indicated; complete with connector assemblies, clamp assemblies, connector plates, splice plates, splice bars, cable fasteners, tray or pieces, fittings, hangers, supports, accessories and associated hardware.
3. Construct units with rounded edges and smooth surfaces, in compliance with applicable codes and standards and in accordance with the manufacturer requirements for installation.
4. Wire basket cable tray system shall be classified by Underwriters Laboratories, Inc. (UL) as equipment grounding conductors.

    a. Straight sections shall be made from steel meeting the minimum mechanical properties of ASTM A510 and shall be electroplated yellow zinc dichromate in accordance with ASTM B633 SC2.
    b. Wall brackets and other pre-galvanized accessories shall be coated with zinc in accordance with ASTM A653.
    c. Support accessories and miscellaneous threaded hardware shall be coated in accordance with ASTM B633 SC3. All threaded components shall be coated in accordance with ASTM B633 SC1.

5. All straight section longitudinal wires shall be straight with no bends.
6. Wire basket system shall be made of high strength steel wires and formed into a standard 2-inch by 4-inch wire mesh pattern with intersecting wires welded together. All wire ends along systems' sides (flanges) shall be rounded during manufacturing for safety of cables.
7. Wire basket sizes shall have 6" usable loading depth by 18" wide as indicated on the drawings. Straight sections shall be furnished in standard 118-inch lengths.
8. All fittings shall be field formed as needed, with 12-inch bend radius sweeps.
9. All splicing assemblies shall be EDRN Fast Splice type to maintain UL Classified Listing. Hardware shall be yellow zinc dichromate in accordance with ASTM B633 SC2.
10. Wire basket system supports shall be via trapeze support hangers.

    a. Trapeze support hangers shall be supported by 3/8" diameter rods with 1-5/8" slotted strut.

11. Cable trays shall be of all welded construction to ensure easy fault current paths during the intended life of the system.
12. Expansion connectors shall be used at building contractor joints.
13. Connectors shall be plate or channel type, using 3/8" diameter ribbed neck bolts and free-spinning serrated face locknuts.
14. The cable tray at a 5'-0" span shall sustain a working load in "pounds per linear foot" in accordance with tested NEMA Load Test VE 1.3.01 documentation.
15. Cable trays shall be supported independently to the building structure.
16. Where the tray pierces fire rated structure, the tray shall be solid with top cover extending 6" from each side of the structure, or as otherwise noted. The entire tray and cover shall be surrounded with fireproofing material equivalent to Chase Corp. CTC PR-855 or O.S. Gedney CFS/CAFS.
17. Ground the cable tray system at each 100'-0" minimum length with #6 AWG green insulated copper conductor to the building structural system.

C. Conduit and Pull Boxes

1. Where areas have non-accessible ceilings, provide conduit pathways covering the entire length of the non-accessible cavity. The number and size of conduits shall be per Section 3.2 “Installation”.
2. Where conduits cross smoke partitions or fire rated partitions, provide conduit sleeves, minimum (1) per system extending 6" beyond partition in both directions. Number and size of sleeves shall be per “approved” and “listed” equivalent firestop system manufacturer's requirements. See Specification Section 078413 "Through-Penetration Firestopping System."
3. Telecommunication/data outlets shall consist of 4-11/16” by 4-11/16” square 2-1/8” deep 2-gang box with single or double gang device plate as indicated on the drawings. 1” conduit shall run from each outlet to connect to the local cable tray system.
4. Telecommunication backboards in telecommunication/data rooms shall consist of 3/4" FRT plywood sheets with a finished side primed and painted with two coats of fire retardant black paint and as shown on the drawings and in accordance with Miscellaneous Carpentry Section of the Specifications. (Furnished and installed by Division 6).
5. Install conduit runs in the most direct route possible with no more than two 90 degree bends between pull points or pull boxes.
6. 90-degree condulets or “LB” fittings shall not be used for telecommunications cabling installations.
7. Continuous conduit sections shall not be greater than 100 linear feet in length without an adequately sized pull box.
8. Conduits shall be bonded to ground on one or both ends in accordance with national and local requirements.
9. Telecommunications conduits shall withstand the environment to which they will be exposed.
10. The total distance of installed conduit runs for telecommunications use shall not exceed 100 feet between pull box.
11. Do not install conduits over or adjacent to boilers, incinerators, hot water lines, steam lines or hazardous and explosive use areas.
12. The bend radius of any portion of the conduit pathway shall be six (6) times the internal diameter of the conduit for all conduits 2-inches in diameter or less.
13. The bend radius of any portion of the conduit pathway shall be ten (10) times the internal diameter of the conduit for all conduits with an internal diameter greater than 2-inches.
14. Where a conduit run requires a reverse bend (between 100 degrees and 180 degrees) a pull box shall be installed at each bend having such angle, within ten feet of the bend.
15. If a conduit run requires a third 90 degree bend between pull points or pull box, the overall design capacity of the conduit system shall have a derated total capacity of 15 percent.
16. All Conduit ends shall be reamed and fitted with an insulating bushing to eliminate sharp edges that can damage cables during installation.
17. Conduits that protrude through walls and floors shall be extended 6-inches beyond the surface penetration.

18. All conduits shall be equipped with nylon pull string with a minimum test rating of 200lbs.
19. Install pull boxes in accessible locations. Direct access to pull boxes is required. Provide labeled, hinged access panel door. Pull boxes shall be listed for the purpose.

D. Power and Grounding Requirements

1. Provide a 20" by 1/4" by 4” copper ground bus in the BEF, Chatsworth P/N is 40153-020 or approved equal.
2. Provide a 12” by 1/4” by 4” copper ground bus in each IDF, Chatsworth P/N is 40153-012 or approved equal.
3. Provide irreversible compression 2-hole lugs manufactured by Bundy, Panduit and Thomas + Betts or approved equal.
4. Provide vertical rack busbar kits for each equipment rack in the BEF and ISG Server Room shown on the drawings, Chatsworth P/N is 40161-072 or approved equal.
5. Provide horizontal rack busbar for each AV equipment rack as shown on drawings. Chatsworth P/N is 10610-019.
6. Provide #6, 1/0, 3/0, 4/0 green THHN insulated ground wire.

2.13 FIRESTOP UNITS FOR MULTICABLE AND CABLE TRAY PENETRATIONS

A. See Specification Section 078413- Through-Penetration Firestopping System.

2.14 ELEVATOR TELEPHONE

A. Furnish and install all telecommunications cabling as required by the elevator manufacturer. Consult Elevator Subcontractor and obtain final accepted elevator shop drawings prior to installation of cable, conduit, junction boxes, etc., for the elevator machine room.

B. Junction box(s) within the elevator machine room and conduit(s) entering IDF shall be labeled as “ELEVATOR PHONE”. Elevator phone cables within the conduits shall be labeled at both ends in accordance with the labeling requirements specified elsewhere within these specifications.

2.15 ACCESS DOORS

A. Furnish, for installation by the designated Trade as determined by the General Contractor, all access doors in locations wherever pull or junction boxes, equipment, etc., are installed behind gypsum wallboard or masonry walls or ceilings and where such devices would be inaccessible for inspection, maintenance or servicing. Access doors shall be a minimum of 24" by 24" and shall be sized to suit the access requirement to service the equipment and located in a manner approved by the Architect and to meet requirements specified here and elsewhere, for specific applications. Refer to Architectural Section 08305 for additional information.

B. Doors shall be set square and flush in cooperation with the designated Subcontractors performing the work. Particular attention shall be exercised in the selection of doors for masonry walls in order that frame sizes used will match the courses of brick or block. All access panels shall be located in closets, storage rooms and/or other non-public areas where possible, positioned so that the junction can be easily reached and shall be constructed in a workmanlike manner. When access panels are required in corridors, lobbies or other habitable areas, they will be located as directed by Architect.

C. Access panels shall be flush type with 14 gauge panels and 16 gauge frames, minimum, unless otherwise noted. Each access panel shall be furnished complete with continuous piano hinge and flush screwdriver operated cam latch, with factory applied prime finish. Access panels shall be as manufactured by Inryco/Milcor, Karp Associates Inc., Birmingham Ornamental Iron Co., Miami-Carey, Babcock-Davis or equal approved by the Architect.

D. Access panels shall be installed in gypsum wallboard ceilings only where specifically approved by the Architect. Where possible, all access requirements for raceways and equipment shall be beyond the gypsum wallboard ceilings.

E. Access panels shall be specifically designed for each type of wall, ceiling finish and construction with which they are used, as follows:

1. Suspended latch and gypsum wallboard ceilings: Style K with 16 gauge frame, 14 gauge panel and flush screwdriver operated camlocks.
2. Masonry rated walls: Style M with 16 gauge frame, 14 gauge panel and flush screwdriver operated camlocks.
3. Masonry fire rated walls and at shafts: Fire rated with UL, 1.5-hour "B" rating, 16 gauge frame, 20 gauge sandwich type insulated panel, self-latching lock having interior release mechanism, and flush screwdriver operated camlocks.
4. Where installed at fire rated walls or ceilings, access panels shall be of fire-resistive construction with mineral core panel faced both sides and edges with 20 gauge sheet steel, and shall bear the UL label required to meet the fire rating of the wall.
5. Where installed in surfaces finished with ceramic tile or glazed coatings, access panels shall be of stainless steel with No. 4 finish.
6. Where installed in acoustical ceilings, access panels shall be of type which will accept adhesive mounted acoustical panels flush with surrounding surfaces (acoustical panels to be provided by Acoustical Ceiling Trade).
7. Where installed in gypsum wallboard walls or ceilings, access panels shall be of type with 14 gauge face panels and 16 gauge frames equipped with integral perforated, textured metal casing bead edge which will receive drywall compound for flush finishing. (Compound finishing shall be provided by Gypsum Drywall Trade.)

2.16 HANGERS AND SUPPORTS

A. Provide all required cable tray, cable runway, supports, sleeves, clamps, etc., as required for all telecommunications raceway and Telecommunication support system equipment.

B. In areas where there is no cable tray and conduit is not used, the contractor must provide a non-continuous “J Hook” cable management system from the telecommunication rooms to the work area location conduit stubs. The non-continuous “J Hook” shall be supported by distance between 48” and 60” spacing.

C. The cable management system shall be supported throughout at distances not exceeding 60” and shall be installed such that 25% spare capacity is afforded minimum.

D. All horizontal runs of conduits shall be properly grouped, aligned, using substantial hangers, straps, etc. Hangers and supports shall be installed at intervals not exceeding NEC requirements.

E. Supporting rods shall be threaded at ends with allowance for adjustments. Wire and strap hangers and Ty-wire will not be permitted. All conduit and fittings shall be supported by hangers, straps, etc., using bolts.

F. Structural Support Interface

1. All conduit, cable tray, raceways and other similar system components which are supported by roof or floor joists shall be hung from the top chord or bottom chord panel point or a panel point shall be provided by applying a vertical web member. The maximum load shall not exceed 250 pounds.
2. All conduit, cable tray, raceways and other similar system components which are supported by roof/floor beams shall be hung from the beams with clamp attachments which engage both edges of the beam flange.

    a. The hanger shall be located directly below the web of the beam and the hanger load shall be limited to 1000 pounds in area above mechanical room and 250 pounds in remaining areas, unless otherwise approved by the Architect.

3. All additional supports, clamps, web members, etc., required to comply with the above requirements shall be provided by the Contractor, as applicable, for the work furnished and installed under this Contract.

2.17 MECHANICAL SUSPENSION CHANNEL

A. Mechanical suspension channel shall be furnished and installed to support equipment, (raceways, conduits, pull boxes, etc.) independent of walls. Where walls back up to occupied spaces, the suspension channels shall be at least 1/2" clear of the wall and shall not be connected or braced to the wall.

B. Channel shall be Unistrut, Type P3000 or approved equal. All fasteners and fittings shall be supplied to provide a complete installation as required. Channel shall be sized and mounted to allow for future conduits.

C. All channel and fittings shall be furnished with the manufacturer's standard rustproofed finish.

D. Channel shall be manufactured by one of the following: Unistrut Products Co., Kindorf, or B-Line.

2.18 WIRELESS ACCESS POINT ENCLOSURE

A. The 802.11 wireless access point shall be installed in suspended ceiling lockable metal 24” x 24” enclosure mounted in the ceiling. Contractor shall furnish and install the following:

1. Oberon Part Number Model 1068-00.

B. The 802.11 wireless access point shall be installed in wall-mounted right angle metal bracket. Contractor shall furnish and install the following:

1. Oberon Part Number model 1011-00.

C. The 802.11 wireless access point will require a mounting plate for the ceiling-mounted enclosure. Contractor shall furnish and install the following:

1. Oberon Part Number 68-CCOAP.

D. Wireless access points shall be furnished by UConn and installed by Contractor.

PART 3 – EXECUTION

3.1 COOPERATION AND WORK PROGRESS

A. The work shall be carried on under the usual construction conditions, in conjunction with all other work at the site. The Contractor shall cooperate with the Architect and all other Subcontractors and equipment suppliers working at the site. The Contractor shall coordinate the work and proceed in a manner so as not to delay the progress of the project.

B. The Contractor shall coordinate his/her work with the progress of the building and other Trades so that he will complete his/her work as soon as conditions permit and such that interruptions of the building functions will be at a minimum. Any overtime hours worked or additional costs incurred due to lack of or improper coordination with other Trades, the Architect or the Owner's representative by the Contractor shall be assumed by him without any additional cost to the Owner's representative.

C. The Contractor shall provide information on all equipment that is furnished under this Section but installed under another Section to the installing Subcontractor as specified herein.

D. The Contractor shall furnish all materials, equipment and workmanship to provide for adequate protection of all equipment during the course of construction of the project. This shall also include protection from moisture and all foreign matter. The Contractor shall also be responsible for damage which he causes to the work of other Trades, and he shall remedy such injury at his/her own expense.

E. Waste materials shall be removed promptly from the premises. All material and equipment stored on the premises shall be kept in a neat and orderly fashion. Material or equipment shall not be stored where exposed to the weather. The Contractor shall be responsible for the security, safekeeping and any damages, including acts of vandalism, of all material and equipment stored at the job site.

F. The Contractor shall be responsible for unloading all materials delivered to the site. This shall also include all large and heavy items or which require hoisting. Consult with the General Contractor for hoisting/crane requirements. The Contractor shall be responsible for any cost for hoisting/crane requirements.

G. It shall be the responsibility of the Contractor to coordinate the delivery of the materials for the project prior to the time installation of such materials will be required.

H. The Contractor shall erect and maintain, at all times, necessary safeguards for the protection of life and property of the Owner's representative(s), Personnel and the Public.

I. Prior to installation, the Contractor has the responsibility to coordinate the exact mounting arrangement and location of equipment to allow proper space requirements as indicated in the NEC. If it is questionable that sufficient space, architectural or structural obstructions, or a conflict with the work of other Subcontractors will result in an arrangement which will prevent proper access, operation or maintenance of the indicated equipment, the Contractor shall immediately notify the General Contractor and shall not proceed with this part of the work until definite instructions have been given to him by the Architect.

J. The Contractor shall not allow any equipment or piping foreign to the telecommunications installation to be installed or pass through any telecommunication rooms in which communication systems and equipment are located, such as computer equipment, PBX and distribution frames. The Contractor shall notify the General Contractor of such violations and request immediate removal.

K. The Contractor shall obtain from the other Trades, copies of all shop drawing prints showing ductwork and piping installations as they will be put in place on the project. These drawings shall be thoroughly checked by the Contractor and used for the routing of all cable tray, cable runway, conduits and innerduct installations.

L. Location of all outlets shall be verified with the Architect prior to roughing in conduits or routing of cables. Refer to details and wall elevations on the Architectural drawings. Mounting heights indicated on these drawings and/or specific dimensional information given to the Contractor by the Architect shall take precedence over such information indicated on the Telecommunication drawings.

3.2 INSTALLATION

A. The Contractor shall provide five (5) references with contact names and telephone numbers regarding successful completion of Telecommunication cabling projects within the last year.

B. The Contractor shall Furnish and Install in accordance with manufacturer's instructions, all wiring, conduit, outlet boxes, pull boxes, etc., as required for the erection of a complete telecommunications system as described herein and as indicated on the drawings.

C. All wiring at the work area outlet box shall be concealed in conduit and shall be routed to above an accessible ceiling to the wire basket cable tray system. A pull string shall also be included with the installed cabling for pulling additional services in the future.

D. Where ceiling construction is drywall or concealed spline type and/or is inaccessible as determined by the Architect, telecommunications conduit shall be installed in and shall be terminated beyond these areas in order to act as a dedicated pathway for telecommunications cabling back to the wire basket cable tray system.

E. Where areas have non accessible ceilings, provide conduit(s), minimum one (1) per system, covering the entire length of the non-accessible cavity, ensuring access to each end of the conduit sleeve(s). Conduit sleeves shall be sized in accordance with the following unless otherwise specified;

1. Horizontal Distribution Cable

a.	0-4 cables	1" Trade Size Conduit
b.	5-7 cables	1-1/4" Trade Size Conduit
c.	8-10 cables	1-1/2" Trade Size Conduit
d.	11-16 cables	2" Trade Size Conduit
e.	17-24 cables	2-1/2" Trade Size Conduit
f.	25-38 cables	3" Trade Size Conduit
g.	39-56 cables	3-1/2" Trade Size Conduit
h.	57-74 cables	4" Trade Size Conduit

F. Where corridors or necessary cable access pathway routes cross smoke partitions or fire-rated partitions, provide conduit sleeves, minimum one (1) per system extending 6" beyond partition in both directions, and firestop. Specification Section 078413 - Through-Penetration Firestopping System.

3.3 TELECOMMUNICATIONS CABLING PRACTICE

A. All cable installation and termination shall adhere to the provisions in ANSI/TIA/EIA 568-C standards.

B. All cable and equipment shall be installed in a neat and workmanlike manner. Methods of construction that are not specifically described or indicated in the Contract Documents shall be subject to the control and approval of the Owner or Owner Representative.

C. All horizontal cable designated as Category 6 on the Drawings shall be 100 Ohm, Unshielded Twisted Pair (UTP), 23 AWG, plenum rated, with solid copper conductors. The horizontal cable shall run from each work area telecommunication outlet to the appropriate patch panel in the IDFs.

D. The physical length of each horizontal cable run (length of cable sheathing) shall not exceed 295 linear feet. Each Horizontal cable shall be a continuous run with no splices, bridges, or other discontinuities.

E. All horizontal distribution cables within the IDFs shall be terminated on the 48-port, 2-RMU, Category 6, rack-mounted patch panels.

F. Coaxial cables shall terminate within the IDFs with “F” style compression connector and coiled at CATV wall field. This is not an interconnection or cross-connect. Interconnections and or cross-connections between coaxial backbone and horizontal systems are “by Owner”. Splitters, amplifiers and head-end electronics are by Owner.

G. All cables shall be clearly labeled at each end, with the location number machine-labeled at 4" to 6" from the points of termination.

H. All wall and floor penetrations and cable sleeves greater than 1” in diameter shall be firestopped.

I. Backbone cables shall not be exposed; cable running between non-stacking IDFs shall be run in conduit.

J. Each fiber optic backbone cable strand shall be fusion spliced at both ends, using SC/APC fusion splice cassette modules.

K. Maintain cable twist-rate at all termination points. The amount of cable untwist shall be no more than ½". Do not strip back the cable jacket any more than is necessary to terminate the individual conductors.

L. Provide a 12-foot service loop, neatly coiled in the ceiling above each modular furniture area, for all horizontal distribution cables serving these areas.

M. Provide a 20-foot service loop for the Category 3 voice grade multiconductor and CATV backbone cable at the voice termination or CATV backboard, within each IDF and in BEF.

N. Provide a 20-foot service loop for the optical fiber backbone at the equipment rack, within the overhead runway within each IDF and in BEF.

O. Provide minimum 12-inches of cable slack at the work area outlet for all horizontal copper UTP distribution cabling.

P. The Telecommunication Contractor must provide protective covering for any horizontal cables (4-Pair) left exposed in occupied areas using Techflex clean cut braided sleeving as required, for the entire length of the exposed cabling. Exposed cable (with braided sleeving) in such areas shall not exceed 24". Use of an approved equal method will be considered.

Q. Conduit bends must have a radius of not less than 6 times the internal diameter of conduits 2 inches or smaller; or 10 times the internal diameter of conduits larger than 2 inches.

R. Cables shall be supported at 48" to 60" on center minimum when non-continuous "J Hook" support system is used and shall not be tie wrapped to other utilities such as electrical conduit or sprinkler pipes.

S. Cable shall not lie on ceiling tiles, plumbing or steam pipes, high voltage conduits or trays, fluorescent lights or any other known source of heat, moisture or electrical magnetic interference (EMI).

T. Cable cannot be strapped or tied to any electrical conduits, raceways, plumbing or any type of incorrectly supported loose wiring.

U. A 5-inch clearance and/or separation must be maintained between any communications and electrical conduits.

V. No Telecommunication cabling shall be run in the same conduit or raceway with power conductor except where the raceway is separated by a full height, integral divider.

W. Installation of the Telecommunication cable shall be in accordance with the marked floor plan. All deviations to the cable route shall be approved by the Owner prior to installation.

X. Telecommunication cable routing shall follow physical separation guidelines and shall avoid locations of high RFI/EMI radiation or adverse environmental conditions. Cable shall be a minimum of 4 feet from any electric motor or light ballast

Y. The telecommunications cable plant shall be grounded and bonded in accordance with ANSI/TIA/EIA-607-B and 2011 NEC Article 250.

3.4 WIRE BASKET CABLE TRAY AND CABLE RUNWAY INSTALLATION

A. Inspect areas to receive cable management system. Notify the engineer of conditions that would adversely affect the installation or subsequent utilization of the system. Do not proceed with installation until unsatisfactory conditions are corrected.

B. Install cable tray and cable runway systems in accordance with recognized industry practices and in accordance with manufacturer's instructions and ensure that the cable support system equipment complies with requirements of NEC and applicable portions of NFPA-70B and NECA "Standards of Installation" pertaining to installation practice.

C. Coordinate "wire basket" cable tray systems with other work as necessary to properly interface installation of wire basket cable tray with other work.

D. Install and support "Wire Basket" cable tray management system in accordance with span load criteria.

E. Install "Wire Basket" cable tray management system using hardware, splice connectors, support components, and accessories available from and in accordance with manufacturer.

F. Provide sufficient space encompassing the "Wire Basket" cable tray system to permit access for installing and maintaining cables.

1. Maintain a minimum of 8" clear space above the top edge of the cable tray side rail(s).
2. Obstructions occurring above the cable tray side rail shall only be permitted provided the obstruction does not occur for more that 18-inches above the side rail and does not extend into the cable tray area.

3.5 FIRESTOPPING

A. Specification Section 078413 - Through-Penetration Firestopping System.

B. Contractor shall Firestop any/all horizontal and vertical sleeves as required by manufacturer to achieve required fire-rating.

3.6 TESTING AND CERTIFICATION

A. 100% of the installed cabling shall be tested and must pass the requirements of the standards mentioned above and as defined herein.

B. Any failing link must be diagnosed and corrected. The corrective action shall be followed with a new test to prove that the corrected link meets the performance requirements.

C. The Contractor shall provide proof that the tester(s) used have been calibrated for accuracy in accordance with the manufacturer's requirements.

D. The PASS or FAIL condition for the link tested shall be determined by the results of the individual tests. Any Fail or Fail* (with asterisk) result shall yield a fail for the tested link and shall be corrected and re-tested at no cost to Owner.

E. Each cable terminating in a Telecommunication Outlet shall be tested from the Intermediate Distribution Frame with a 4-pair Category 6 Permanent Link wire tester. The tester shall verify continuity, faults, reversals, swaps and pairing.

F. Each Category 6 cable link shall be tested for the parameters listed below and shall be verified for acceptable length, in accordance with ANSI/TIA/EIA-568-C. Level IV testers shall be used. Fluke Network Systems DTX1800 or approved equal.

G. All Category 6 cables shall be certified end to end from the user station outlet to the Distribution Frame. Tests shall be performed using an ANSI/TIA/EIA Level IV cable tester. The Owner shall be supplied documentation (Hard and Electronic copy) with the following test results:

1. Line map continuity
2. NEXT (Near End Cross Talk) measured to 500 MHz
3. PSNEXT (Power Sum Near End Cross Talk) dB measured to 500 MHz
4. Insertion Loss (dB) measured to 500 MHz
5. ACR-F Loss
6. PS ACR-F Loss
7. Return Loss
8. Propagation Delay
9. Delay Skew
10. Impedance
11. Capacitance
12. Length
13. Loop Resistance

H. All Category 3 Backbone Distribution cables and tie cables for Voice shall be tested for:

1. Wiremap
2. Length
3. Loop Resistance

I. All fiber optic cables shall be tested after termination of both ends (BEF to IDF) and tests shall be conducted in both directions. Each Singlemode cable shall be tested at the 1310nm and 1550nm wavelength for decibel loss utilizing a stabilized lightsource and optical power meter. Fiber testing must conform to ANSI/TIA/EIA 526, Optical Power Loss Measurements. The maximum loss of each strand shall not exceed 2.0dB. The Owner shall be supplied documentation with the following test results:

1. End to end attenuation testing for each fiber strand using a calibrated Power meter and Light source.
2. OTDR (Optical Time Domain Reflectometer) Signature traces of fiber runs in excess of 300 feet.

3. Certificate of Compliance for Connector and Splice Loss
4. The length of each fiber shall be measured using an Optical Time Domain Reflectometer (OTDR). A hard copy of the OTDR screen and the OTDR setting shall be provided to the Owner. Hand written test results will not be accepted.

J. All coaxial cable segments shall be tested for impedance, time domain and structural return loss in accordance to manufacturer minimum performance values. Coaxial adapters for the Level IV tester.

1. HDTDR (High Definition Time Domain Reflectometry)
2. Resistance
3. Impedance
4. Length
5. Propagation Delay
6. Insertation Loss

K. Cable Tray

1. Test wire basket systems to ensure electrical continuity of bonding and grounding connections and verify compliance with specified maximum grounding resistance in accordance with NFPA-70B.
2. Provide manufacturer test reports as witnessed by an independent testing laboratory, of the "worst case" loading conditions outlined in this specification and performed in accordance with the latest revision of NEMA VE-1.

3.7 GROUNDING, BONDING AND ELECTRICAL PROTECTION

A. General

1. A suitable telecommunications ground (for equipment) is required. Each IDF and BEF shall be equipped with an approved grounding busbar. Each equipment rack, cable runway, vertical and horizontal sleeve system, vertical ground busbar kit shall be bonded to the local grounding busbar with an insulated, green, #6AWG, bonding conductor.
2. IDF and BEF must be bonded to a known or established telecommunications ground within the building.
3. The established communications ground shall be in accordance with NFPA 70 (NEC) requirements.
4. All grounding and bonding connections shall be filed to BARE clean metal for proper continuity.

3.8 AS-BUILT DRAWINGS AND RECORDS

A. Provide detailed and accurate documentation of the distribution system upon completion of the installation in order to facilitate system administration, system maintenance, and future system changes.

B. Maintain a clean set of Redline Contract Documents on site at all times and note any deviations in installation on a day-to-day basis. The markup set shall serve as the basis for the Contractor to provide an AutoCAD file of all As-Built Drawings, which shall be turned over to the Owner at final inspection.

C. Contractor shall provide all necessary testing equipment to test all cables. And maintain a complete set of test records on site at all times and note any deviations in installation on a day-to-day basis. The tests shall indicate results in accordance with ANSI/TIA/EIA-568-C for every cable and port installed per the terms and conditions as set forth herein. These test records shall serve as the basis for the Contractor to provide final test results which shall be turned over to the Owner at final inspection. Test results in Hard copy and Electronic copy are due seven (7) days after completion of project.

D. Both a hard copy and an electronic file (*.csv formatted) of the test results for each cable run shall be provided to the Owner. The Owner and Contractor shall agree upon acceptable test results prior to testing. It is the Contractor's responsibility to replace, repair, or modify any cable run which tests outside the agreed-upon ranges, in such a manner as to be acceptable to the Owner.

E. Before the system is accepted by the Owner, the Contractor will be required to "walk-through" the installation with the Owner and verify proper installation and conformance to specifications, Drawings, and other agreed upon, written details.

3.9 LABELING

A. General

1. All labeling schemes shall be approved in writing, by a designated UCONN UITS representative prior to installation.
2. All labels shall be clearly printed on machine generated (i.e., Brother P-Touch System) clear or opaque tape and meet the following requirements:

    a. The font shall be approximately 1/8 inch in height; with block type characters and shall be clearly legible.
    b. Hand written labels will not be accepted.
    c. The text color shall contrast with the label background color (e.g., black text on a white background).
    d. Provide nameplates in or on the faceplates, wiring blocks, patch panels and equipment racks. Wiring block(s) labeling shall exhibit all station numbers in sequential order.
    e. Nameplates shall be securely attached to the equipment.
    f. Each Horizontal and Backbone cables shall be clearly labeled at each end.
    g. Label all cables that are left un-terminated in walls or other pathways and/or spaces in accordance with ANSI/TIA/EIA-606-B or approved alternate.
    h. Label all grounding and bonding conductors, backbone and busbars in accordance with ANSI/TIA/EIA-606-B or approved alternate.

i. Provide warning tags at each location where fiber optic cable is exposed to human intrusion. These tags shall be yellow or orange and shall contain the warning:

1) "CAUTION FIBER OPTIC CABLE". The text shall be permanent, black, block type characters, and shall be a minimum 3/16-inch in height. A warning tag shall be permanently affixed to each exposed cable or bundle of cables at intervals of 5 feet, minimum. Any section of exposed cable that is less than 5 feet in length shall have at least one warning tag affixed. Panduit P/N is PST-FO or approved equal.

B. Telecommunications Outlets

1. Each telecommunication outlet shall be labeled with its own unique identification number. Coordinate with UCONN UITS labeling scheme.

C. Telecommunication Room and Building Entrance Facility

1. Each patch panel and wiring block position within the IDFs shall be labeled with its own unique identification number.
2. Each equipment rack and cabinet shall be labeled with unique and sequential identification labels.
3. The labeling scheme will be sequential and shall coincide with the floor plan communication outlet locations.
4. Patch panel identification numbers shall be sequential, and shall correlate exactly with the telecommunication outlet identification numbers.

3.10 CLEANING

A. General

1. This Section of the specifications shall include the cleaning materials on a day-to-day basis and final cleaning of all equipment and materials prior to turning building over to the Owner's representative. All necessary cleaning referred to herein shall be performed to the satisfaction of the Architect.
2. Ensure timely cleanup of all facilities and buildings related to this project, during construction and at completion.

B. Telecommunication Rooms

1. Upon completion of cleaning work areas as described in Paragraph A. above, but before energizing equipment, the entire room shall be swept clean and all garbage shall be removed from the site.
2. Once Telecommunication Rooms are cleaned, the area shall remain clean and doors shall remain closed until completion of job.

C. Final Cleaning

1. All Telecommunication devices, device plates, etc., shall be cleaned and left in "like new" condition to the satisfaction of the Architect, prior to occupancy.
2. All rubbish and discarded materials shall be disposed of and removed from the site on a day-to-day basis.

END OF SECTION 270510

SECTION 281000

SECURITY SYSTEMS

PART 1 – GENERAL

1.1 RELATED DOCUMENTS & INFORMATION

A. General provisions of the Agreement, including the University of Connecticut ñStandard Instructions to Biddersò and ñMinimum Insurance Requirementsò.

B. Security Drawings: SEC-00, SEC-B, SEC-01, SEC-02, SEC-03, SEC-04, SEC-05, SEC-P, SEC-R, SEC-RIS, SEC-DET; the Architectural Door Hardware Schedule.

1.2 PROJECT SUMMARY

The University of Connecticut's New Engineering Building & Technology Center will consist of a 110K Gross square foot four-story lab type facility. The first floor will be dedicated to Computing, VR & Simulation and Controls & Sensors Systems, Bio Engineering and Bio Materials Group will occupy the second floor, a General Research Lab will be located on the third floor and the Chemical Engineering Group is scheduled to occupy the fourth floor. This new building will be located adjacent to the Chemistry Building and on the grounds occupied by the Central Receiving & Storage building which will be raised.

The University has numerous security systems on campus and has chosen the Millennium Enterprise System for their Security Management System (SMS) for this facilityôs access control monitoring functions. The system will be capable of monitoring and controlling alarm points and access control points through the use of distributed intelligent electronic intelligent field panels/site control units (SCU).

The access control programming and monitoring for this facilityôs system shall be accomplished from the campus Security Operations Center where the existing Millennium system server is located. The communication between the SMS systemôs server the intelligent field panels/site control units (SCUs) within this building that control the card readers and electrified door hardware shall reside on the campus IT network. The card readers for the facility will be the HID R40 (wall mount) or R10 (mullion mount) iClass multi technology devices. Access beyond the outer perimeter on each floor including numerous select internal lab spaces shall be controlled with card readers. Card readers shall also be provided inside each of the elevator cabs for limiting access to all but a select number of individuals on to each of the facilityôs floors

The SMS access control system shall have the capability of monitoring alarm conditions generated by intrusion detection devices. All perimeter doors of this building shall be monitored with door position switches. Most of the first level perimeter doors shall also be provided with electrified hardware and card readers to allow for automatic control (locking and unlocking) through the SMS system.

A separate Intrusion (central station type) Alarm system manufactured by DSX shall be interfaced with the Millennium SCUs via relay outputs. After-hour intrusion alarms generated by the Millennium system will also be sent via to the campus public safety communications center. DSX relay outputs shall also be used to provide the camera alarm trigger to the Genetec video system. The DSX relay outputs shall be interfaced to a Mercury input board which shall be connected to the Genetec video system. The DSX system shall also be integrated with the facilityôs fire alarm system and transmit fire alarm notifications to the campus police monitoring station.

The campus Video Management System (VMS) shall consist of IP cameras and network video recorders (NVR). The IP cameras shall be recorded on NVRs to be located centrally on campus within the public safety communications center. The facilityôs video cameras shall also be displayed on a workstation to be located inside the loading dock office. The University has standardized on Sony IP cameras and the Genetec VMS for their campus surveillance solution. The recorded or live video for viewing at the NVR workstation shall be transmitted via the campus network. The color IP cameras scheduled for the building shall primarily located at the exits and pedestrian entrances of the facility as well as at the elevator lobbies and stairwell entrances to each of the buildingôs floors. The IP cameras shall be powered via the network utilizing CAT 6 cable.

As part of this project, provide a free standing emergency communication unit stanchion which shall be located near the exterior perimeter of the building. This device shall be used to communicate with the campus police and shall be compatible with the existing Code Blue campus system. Exact location of unit to be detemined.

All bidders must be certified dealers/integrators for that system. Bidders are required to provide documentation that the contractor is an authorized dealer for all products proposed and provide lists of contractorôs staff that have been factory trained on the major systems being proposed.

1.3 SECURITY SYSTEM DESCRIPTION

This section provides a general description of the security work to be performed. Specific requirements are described in following sections.

A. Security Management System (SMS)

The University has chosen the Millennium Enterprise System (manufactured by the Millennium Group) for their Security Management System (SMS) for this facilityôs access control and security monitoring functions.

The card reader technology for this project shall be the HID multi-technology iClass readers. Select entrances within this building will be controlled with card readers.

B. Video Management System (VMS)

Provide IP cameras shall use industry standard video compression protocols. The campus Video Management System (VMS) shall consist of IP cameras and network video recorder(s) (NVR). The IP cameras shall be recorded on an NVR to be rack mounted and located in one of the IT/Security Closets within the building. The University has standardized on the Genetec VMS. The security integrator shall supply the Genetec NVR.

C Communication System

New IP video cameras and the SMS smart panels shall communicate with the head end servers and recorders via the UCONN campus network.

Security contractor shall be responsible to interface the Universityôs IT department (UITS) personnel to assure a fully operational security transmission system.

D. Manufacturers and Equipment Selection

Where a single manufacturer is listed in these specifications for a specific component, alternates may only be proposed after written approval by Owner prior to bid.

In all cases, it is the bidderôs responsibility to ensure that proposed equipment will meet the functional and performance requirements. Any exceptions must be stated clearly in the relevant proposal section.

1.4 WORK INCLUDED

A. Submit shop drawings, samples, training plan, testing plan, as-built drawings, operations manuals, and maintenance manuals. Attend site coordination meetings.

B. Within two weeks of contract award, develop a project implementation schedule and coordinate the timeline with that of the general construction schedule. Create a project matrix based on the security implementation schedule which shall be updated and distributed weekly. The project matrix shall be reviewed via scheduled conference calls with the security project team or during a site meeting if necessary. The

conference calls shall be scheduled at least monthly to insure timely reporting of any issues relative to installation progress or coordination, but may be required more frequently due to critical schedule or coordination issues.

C. Train security system operators, administrators, and supervisors in the complete operation of the system.

D. Commissioning: collect, develop, prepare and enter all initial database information including, but not limited to employee access data, alarm descriptors, alarm response messages, report styles, on-screen camera titles, video switching, and video recording schemes. Contractor shall submit to Owner suitable data entry forms within one week of bid award and shall instruct Owner on what data is required to complete the forms.

E. Test and debug all cable and associated components, sub-systems, and systems. Resolve defective items until complete acceptance by Owner. (Beneficial use shall not be considered acceptance).

F. Warrant and maintain system for one year from date of system acceptance. Provide pricing for comprehensive maintenance for 2nd through 5th years with this proposal).

G. Supply and install all specified equipment and low voltage cable and conduit. Terminate and tag all cabling. Connect security equipment to the buildingôs power (convenience receptacles and plug-in transformers shall not be used).

H. Security contractor shall supply and install ñlocalò conduit for equipment enclosures and power supplies in the IT closets. All power shall be hard-wired and all cable shall be concealed in metal conduit (EMT) or raceway. Cabling for each security system component to the IT closets shall be via ñJò hooks mounted on the IT cable trays (provided by others).

I. Supply, install, wire and connect low voltage power transformers and power supplies for field panels, door locks, cameras, card readers, etc. Install, connect and test fire alarm interrupt relays to specified lock power supplies.

J. Supply and install the low voltage power supplies (24 VDC) for the electrified door hardware.

K. Supply and install all standard and custom security equipment back boxes. Supply and install conduit, conduit stub-ups, pull boxes, junction boxes, termination boxes and back boxes. Metal conduit shall be installed where cable would otherwise be exposed, and as required by code. For dry wall construction, conduit may be limited to stub-ups from equipment back boxes to junction boxes within drop ceilings. Use of any type of

raceway other than metal conduit is forbidden unless specifically approved by the Owner.

L. Attend site coordination meetings. Interface with the campus UITS department and their contractors to coordinate the integration between the security communication components and the communication components for the campus network.

M. These specifications describe major components. The intent of this procurement is to assure a complete working system to be installed. Contractor shall furnish and install components as described plus all necessary items (e.g., connectors, jumpers, mounting hardware, etc.) to achieve the intent.

N. The security contractor shall be responsible under this contract for all electrical and installation work described above. Electrical subcontractors shall be subject to Owner approval.

1.5 WORK BY OTHERS

A. For connectivity from the building to the central servers and recorders will be provided by others. The security contractor shall be responsible to interface with UITS department personnel to assure a fully operational security transmission system.

B. Electric door locks and power transfer hinges shall be provided and installed by the Architectural Door Hardware supplier.

C. Conduit, conduit stub-ups, riser sleeves, cable tray with ñJò hooks, pull boxes, and back boxes shall be supplied and installed under separate electrical contract. Metal conduit shall be used where cable would otherwise be exposed, and as required by code. For dry wall construction, conduit may be limited to stub-ups from equipment back boxes to junction boxes within drop ceilings.

D. Installation, connection and testing of fire-alarm lock-power interrupt relays shall be provided at each SCU within the IT/security closets as part of the fire alarm system contract.

E. Fire resistant, ¾ò, 4ôx8ôplywood backboards for security equipment at the IT closet locations shall be supplied and installed by others. Each closet location shall be provided with necessary 110 VAC 20 amp power both standard house power for fail-safe locks and UPS and generator for other security system elements.

1.6 RELATED SECTIONS

A. Electrical- Section 265100

B. Architectural Doors- Sections 081000, 081113, 081119, 081416, 083113, 084413.

C. Finish Hardware Section - 087100

D. Electrical- 265100

E. Elevators- Section 142100

1.7 SUBMITTALS

A. Shop Drawings

Within three (3) weeks of contract award, submit three (3) sets of the following for approval as ONE complete package. Submittal shall be rejected if items are missing.

1. List of all items being submitted.

2. Description of operation.

3. Technical specification data sheets for all items. Indicate specific model number and options on sheets covering multiple models and options. (NOTE: providing cut sheets with initial proposal does not acquit contractor of this requirement)

4. Samples of all exposed equipment and mounting hardware.

5. Plans showing device locations and cable/conduit routing.

6. Riser diagrams showing interconnections.

7. Detail drawings showing installation and mounting.

8. Fabrication drawings for console arrangements and equipment layout.

9. Wiring diagrams.

10. Point-to-point termination schedules.

11. All drawings shall be fully dimensioned and prepared in AutoCAD V.2010 compatible format. Contractor shall use the current version of the SIA/IAPSC CAD Security Symbols (V2.0 May 2000). Construction documents in .dxf or .dwg format will be made available on diskette to the successful contractor.

12. Unless otherwise instructed, contractor should not order any equipment until approvals have been granted. Contractor shall identify in proposal any long lead-time items that will require early approval.

13. Compile and provide a list of deficiencies noted or missing infra-structure, interfaces, door hardware, power, network/fiber optic cable, etc. for correction by the associated discipline.

14. Acceptance of shop drawings shall not relieve contractor from compliance with these specifications. The check of shop drawings is for review of general conformance and compliance with the design concept of the project. Contractor shall remain responsible for meeting all the requirements of the contract documents, including the correlation of all quantities and dimensions; the selection of fabrication processes and techniques of construction; the coordination of work with other trades; and the performance of all work in a safe and satisfactory manner.

B. As-Built Drawings

One copy of the following shall be compiled into one (1) Operating and Maintenance Manual and shall be submitted for approval. A drawing set refers to items 5 though 10 listed above.

1. Operating manual.

2. Maintenance manual.

3. Configuration Manual:
   a. Configuration diagrams
   b. As-built capacities and field expansion capabilities
   c. Operating system and software configuration
   d. Application software manual.

4. Full size, reproducible drawing set.

5. Full size set of blue or black line drawings.

Once approval has been granted, submit three (3) complete sets of the above documentation to the Owner. Documentation shall reflect the as-built and as-approved condition of the system. With the approved documentation, submit to Owner all drawing files on CD ROM in AutoCAD .dwg or compatible .dxf format. Contractor shall use the current version of the SIA/IAPSC CAD Security Symbols (V2.0 May 2000).

1.8 WARRANTY

A. Security contractor shall warrant the installed system and the software to be free of defects of materials and workmanship for a period of one-year following the date of system acceptance by Owner. System acceptance shall be when all parts, components, sub-systems and systems have been tested and shown to be working in accordance with the specification and all record drawings have been approved.

B. During the warranty period any components, features or performance found not to meet these specifications shall be corrected at no additional cost to the Owner. This shall be regardless of any acceptance of shop drawings, as-built drawings or systems, unless their exception has been accepted in writing as part of the contractorôs proposal and contract.

C. During the warranty period and as part of the warranty service, provide maintenance as described in 1.9.

1.9 MAINTENANCE

A. The bidder shall offer a complete contract maintenance service through a local repair shop capable of meeting the performance specifications described below. Contractor shall provide documentation to show that service engineers have been factory trained on the equipment that will be installed.

B. The contractor shall propose a comprehensive maintenance contract to cover the services described in Sections C & D below for a minimum of 4 years following the end of the warranty period (total 5 years from the date of system acceptance).

C. Provide the following services:

1. Emergency maintenance service shall be rendered within 4 hours of notification of emergency. (Emergency service shall be required if a system sub-system, device, or component failure requires the posting of additional security staff to maintain an equivalent security level.)

2. Non-emergency repair requests shall be rendered within 24 hours.

3. Replace defective parts and components as required and as described in Section D below.

4. Maintain manufacturerôs software with upgrades of ñfixesò, ñpatchesò, and all new versions that have been released for at least one year.

5. Incorporate improved system reliability, as it becomes available.

6. Perform regularly scheduled preventive maintenance quarterly. This shall include cleaning of exposed equipment (e.g., lenses), adjustments, etc., and shall include a 100% field device inspection and test. Submit quarterly test and maintenance reports to Owner with documentation of all routine and emergency maintenance procedures performed during the prior period.

D. Replacement Parts.

1. The bidder shall maintain or shall have availability of replacement parts. An ample stock of components shall be carried or available for as long a period as demand warrants. This period shall extend well beyond the normal life expectancy of the equipment.

2. If original parts are no longer available, Owner shall be notified and shall have the choice of having the part replaced with the most current equivalent part, or of having all similar installed parts replaced with the most current equivalent part, at no cost to the Owner.

3. Any device that cannot be repaired on-site within 4 hours of arrival of the service representative shall be immediately replaced with a replacement device in good working order. Ownerôs device shall be re-installed when its repairs are complete.

4. Any part that cannot be repaired shall be replaced with a new part of the same make and model as the original.

1.10 COMMISSIONING

A. The contractor shall be responsible for the collection, development and inputting of all data required by the system at start-up. The contractor shall submit to the Owner, within two weeks of contract award, such forms as are necessary for the Owner to determine what data is to be included, e.g. student, employee records (name, phone no., vehicle plate number, social security number, access level), alarm point descriptors, door propped alarm time delays, camera descriptors, etc. The contractor shall provide the Owner such instruction as may be required to intelligently make such selections.

B. Commissioning shall include the following:

1. Collecting and inputting alarm zone and point descriptors, required operator response texts, standard and custom database and report styles.

2. Collecting and inputting on-screen camera titles, video switching and video recording schemes, programming and any other data required for the complete and effective functioning of the Video system.

1.11 TRAINING

1. Train a minimum of 4 people (8 hours) for security system operation that shall include, but shall not be limited to:

    a. Arming and dis-arming of local alarm control panel, acknowledge & silencing of alarm.
    b. Testing of local alarm system
    c. Remotely operating & releasing locks
    d. Elevator control
    e. Video Intercom system

1.12 CODES AND STANDARDS

All components, sub-systems and the implemented systems shall comply with all national, local and state codes, including but not limited to the following:

1. Local Building Codes.
2. NFPA-70 & 731, NEC-2004 (National Electrical Code)
3. NFPA-101, Life Safety Code.
4. American with Disabilities Act (ADA).
5. Underwriter Laboratory (UL).
6. Occupational Health and Safety Association requirements (OSHA).
7. National Electrical Contractors Association/National Electrical Installation Standards (NECA/NEIS).

1.13 PROPOSAL

Prospective contractors shall provide all data requested below in a clear and concise format. If data is missing, Owner shall have the option of disqualifying the proposal.

A. Provide a pricing sheet with unit material and labor costs, quantities and totals for all items. Manufacturer, model number, options, and finish/color shall identify all equipment items. Unit pricing shall include first year warranty and first year maintenance as described above and be valid for Adds and Deletes.

A. Include separate line items for duties, license fees, bonds, insurance, etc.

B. Include line item pricing for each sub-contractor (identify by name), and for commissioning, testing, training, drawing submittals, and other services.

C. Provide separate price for maintenance contract for years 2, 3, 4, and 5.

D. Provide catalog sheets for all equipment. Where sheets cover multiple models and/or options, clearly indicate which model and/or options are proposed. Include one blank sample and one photo sample of the proposed access control card/badge.

E. Provide a written certification that the proposed products and services will meet these specifications. Clearly indicate any exceptions and/or substitutions with the reasons, cost implications, and benefits to the Owner. If specific exceptions are not indicated, it shall be assumed that the contractor shall comply with all aspects of these specifications. Security applications software shall be the standard, off-the-shelf products of the original manufacturer/supplier and shall be supplied complete with necessary use license and documentation. Bidders shall describe in the Technical Proposal the software version number; date issued, and list of end users for that version number (minimum 5). Custom, alpha or beta versions of the software shall not be acceptable. Contractors shall be required to disclose any restrictive codes, which may have been placed in the software to make it inoperable.

F. Provide documentation that contractor is an authorized dealer for all products proposed and provide lists of contractorôs staff who have been factory trained on the major systems being proposed.

G. Provide a list of five installations of similar size that the contractor has completed with similar equipment over the last three years. Provide details of size, complexity, major equipment manufacturer make and model numbers, and client references with current phone numbers.

H. Provide a best estimate implementation schedule from contract award through system acceptance. Indicate critical tasks and tasks that rely on input, supply, or coordination with others. Identify any long lead purchase or fabricated items that require early shop drawing approvals.

I. Describe any equipment or services that are required but are not included in either your proposal or in the ñWork by Othersò section. Describe any site space requirements.

J. Provide one (1) original and four (4) copies of the proposal.

PART 2 - PRODUCT- SECURITY MANAGEMENT SYSTEM (SMS)

2.1 SCOPE

A. The University has chosen the Millenium Enterprise System for their Security Management System (SMS) for this facilityôs access control and security monitoring functions. The system has the capability of monitoring and controlling alarm points and access control points through the use of distributed intelligent electronic intelligent field panels/site control units (SCUs). The SMS Millennium server which located on campus shall communicate with the SCUs via the campus IT network.

B. The access control programming and monitoring for this facilityôs system shall be accomplished from the campus Security Operations Center where the existing Millennium system server is located. The communication between the SMS systemôs server the intelligent field panels/site control units (SCUs) within this building that control the card readers and electrified door hardware shall reside on the campus IT network. The card readers for the facility will be the HID R40 or R10 (mullion mount) iClass multi technology devices (see security hardware schedule and SEC-DET drawing for mullion reader application). Access beyond the outer perimeter on each floor including numerous select internal lab spaces shall be controlled with card readers. The two Elevator cabs shall be provided with card readers for limiting access to each floor.

C. The SMS access control system shall have the capability of monitoring alarm conditions generated by intrusion detection devices. All perimeter doors of this building shall be monitored with door position switches. Most of the first level perimeter doors shall also be provided with electrified hardware and card readers to allow for automatic control (locking and unlocking) through the SMS system.

D. A separate Intrusion (central station type) Alarm system manufactured by DSX shall be interfaced with the Millennium SCUs via relay outputs. DSX relay outputs shall also be used to provide the camera alarm trigger to the Genetec video system. The DSX relay outputs shall be interfaced to an Axis networked I/O module which shall be communicate with the Genetec video system via network connectivity. Select after-hour perimeter intrusion alarms generated by the Millennium system will also be sent via to the campus police monitoring station. The system shall also be integrated with the facilityôs fire alarm system and transmit fire alarm notifications to the campus police monitoring station.

2.2 OPERATION

A. The existing Millenium SMS system has the capability of monitoring and controlling alarm points and access control points through the use of distributed intelligent electronic intelligent field panels/site control units (SCU).

B. On-Line Electronic Access Control System: Millenium Enterprise.

1. System shall have capability to perform:
   a. Access control
   b. Alarm monitoring.
   c. Identification badging.
   d. Programmable relay control.
   e. View events in real time.
   f. Print selected events in real time.
   g. Elevator control.
   h. Controlled by a computer
   i. Support Microsoft SQL Server 2000 through 2008
   j. Control several segregated databases

2.3 MATERIAL

A. Cable and Conduit

1. Provide cable in accordance with manufacturer's specification.

2. Cable shall be installed in rigid metal conduit for vertical stub-ups, where exposed, and where required by code. Use of any type of raceway other than rigid metal conduit is forbidden unless specifically approved by the Owner.

3. All cable shall be plenum rated where required by code.

B. Identification and Tagging

1. Labels, tags or other permanent markings shall be used to identify all cables, wires, terminal blocks and terminals. All markings shall clearly indicate the function, source and destination.

2. All identifications, markings, and labeling shall be clearly shown on as-built drawings.

2.4 GENERAL FEATURES

A. The existing Millenium SMS system has the capability of monitoring and controlling alarm points and access control points through the use of distributed intelligent electronic intelligent field panels/site control units (SCU).

2.5 EQUIPMENT

A. Main SMS System

The University has chosen the Millenium Enterprise System for their Security Management System (SMS) for this facilityôs access control and security monitoring functions. The system will be capable of monitoring and controlling alarm points and access control points through the use of distributed intelligent electronic intelligent field panels/site control units (SCUs). The SMS Millennium server which located on campus shall communicate with the SCUs via the campus IT network.

B. Card Reader

1. No access compromise shall be possible from circuitry accessible from within the reader. All critical circuitry shall be located within a secured area.

2. Reader system equipment shall operate as specified in environments of electromagnetic, radio frequency, and spurious electrical power line interference.

3. Reader shall be compatible with only one type of access card.

4. Visual and audible indication that a card has been decoded and deemed valid or invalid shall be provided at each reader. Reader visual indication shall normally be red when associated door/gate/roll-up is locked/closed/down and green during the time that the door/gate/roll-up is unlocked/open/up by valid card read, remote door release, or timed unlock.

5. Automatic Door Control and Alarm Annunciation:

    a. A reader or DCD shall constantly monitor the status of its associated door via a door position switch (DPS). DPS cabling shall be supervised by the system. A door opened without proper shunting from the card reader, motion detector, exit switch or other egress device, or a cable tamper, shall immediately annunciate an alarm.
    b. A valid access card read shall shunt any associated DPS and/or horn and activate the associated control device, e.g., lock/vehicle barrier arm/roll-up gate, to permit access for an adjustable (0-99 secs.) period that shall be initially set at 10 seconds. The control device shall re-lock immediately after the door has closed.
    c. Egress card readers, motion detectors, request-to-exit switches, and remote door release buttons shall shunt door contacts but shall not unlock the door where free mechanical egress is available, e.g., unlocked door handle or exit device (panic bar). They shall unlock doors where magnetic locks are used. Refer to Security Device Hardware Schedule for specific door hardware operation.
    d. If the door is held open for longer than the specified period of time (initially

set at 10 seconds and adjustable to 99 seconds), an alarm shall be annunciated.

e. After a "door held" condition has been detected, and the door subsequently closes, the system shall transmit a "door closed" advisory to the monitoring station.

C. Mounting

1. The height and location of the card readers is shown on security detail drawings (SEC-DET) and shall be confirmed in the field. The card readers for the facility will be the HID R40 or R10 (mullion mount) iClass multi technology devices (see security hardware schedule and SEC-DET drawing for mullion reader application).

2. Flush mount standard readers on standard single gang back boxes, surface mount mullion readers as indicated on drawings. Mount readers per manufacturerôs installation instructions with particular attention to required distances between the antennae and the reader electronics, and other metal, cabling, CRTs, and electrical/electronic components.

3. Card reader electronics boards (e.g.,SCU, DCD, ECU & ECD) shall be mounted in a locked Hoffman box installed in the IT/Security Closet. Box door shall be equipped with a tamper switch.

D. Reader Type and Models

1. All card reader devices shall be HID contact-less smart card (iClass).

2. For select exterior doors (as shown on Detail Drawings) provide the HID iCLASS R15 mullion mount contact-less smart card reader for exterior applications. For select interior applications where readers are to be mounted on hollow metal frames provide the HID iCLASS R10 contact-less smart card reader. For all other interior applications provide the HID iCLASS R40 contact-less smart card reader (no exceptions).

3. At entrances provide an HID iCLASS module and adapter as part of the door station unit (as shown on Detail Drawings SEC-DET).

E. Door Control Device (DCD):

1. Description:

a. Designed to control a single access point.

b. Contains a real-time clock and sufficient memory to provide access control independent of main PC.

c. Transaction history shall be automatically buffered when not

on line with PC.

d. Priority event buffer assures alarms are annunciated in a timely manner even if history buffer is full.

1. Power: 9 to 14 V DC, supplied by central power supply; 80 to 110 mA, depending upon reader technology. 225 mA additional required during unlock of Marlok rotating cylinder (7 seconds maximum). Accessory relays require additional 20 mA each.

2. Power Protection: Reverse polarity, over voltage, transient.

3. Reader Interfaces Supported: Marlok, clock/data, clock/data inverted, Dallas touch, Wiegand

4. History Buffer: 2,000 transactions. Priority Event Buffer: 100 transactions.

5. On-Board Memory and Clock Backup: 24 hours minimum.

6. Maximum Users Stored in Memory: 10,000.

7. Alarm Input Points: 7 total, 2-wire supervised, 2 or four state selectable (EOL resistor) including built-in door contact monitoring.

8. Alarm Input Monitoring Circuit: Analog to digital conversion.

9. Output Relays: 2 each with Form C contacts rated 2 A, 30V

10. Output Relay Contact Protection: Solid-state polymeric resettable.

11. Connectors: 5 mm plug-on screw terminal.

12. Address Switches: Rotary, direct-reading 00 to 99.

13. Communications: Multi-drop RS-485, proprietary protocol.

14. Mount the DCDs on each floor in a common Enclosure located inside the IT/Security closet on each floor as shown on the security system Riser drawing. Provide a tamper alarm for each key locked enclosure.

15. The DCDs shall be manufactured by the Millenium Group (no exceptions).

F. Door Control Device (DCD):

1. Description:
   a. Designed to control a maximum of 100 door controllers and a maximum of 10 relay controllers.
   b. Normally used for a single site or building, contains a real-time clock and sufficient memory to supervise site.
   c. Maximum of 1,000 site controllers can be addressed in a system.
   d. Transaction history is automatically buffered when not on line with PC.
   e. Priority event buffer assures alarms are annunciated in a timely manner even if history buffer is full.
   f. On-board switches select operational modes.

2. Power: 9 to 14 V DC, supplied by central power supply; 50 mA standby, 90 mA maximum.

3. Power Protection: Reverse polarity, over voltage, transient.

4. PC to SCU Communications Interface: RS-232, RS-485 4-wire, orTCP/IP.

5. SCU to DCD Communications Interface: RS-485 multi-drop 2-wire.

6. Modem Support: Hayes AT command set, 9,600 baud or greater.

7. Supervisory Relay: Rated 2 A, 30 V Form C. Opens on-site fault.

8. History Buffer: 2,000 transactions.

9. Priority Event Buffer: 100 transactions.

10. On-Board Memory and Clock Backup: 24 hours minimum.

11. Alarms: Lost AC input.

12. Tamper Alarm: On-board switch.

13. Connectors: 5 mm screw terminal.

14. Address Switches: Rotary, direct-reading 000 to 999.

15. Operating Environment:
    a. Between 14 degrees F and 104 degrees F (-10 degrees C and 40 degrees
    b. Less than 90 percent noncondensing humidity.

16. Mount each of the DCD boards on a backplane with stand-offs inside a common enclosure to be located centrally within the IT/security closets on each floor. The enclosure shall be locked and provided with a tamper switch. Provide a Nema 1 type enclosure with a front screw cover at a recommended size of 30òx24òx6ò.

G. Intelligent Field Panel /Site Control Unit (SCU)

1. Provide the number of Output and Input Modules required for specified quantities of readers and alarm devices inputs and for output control.

2. Provide the number of Site Control Units as required based on the number of card readers and monitoring points within the facility. The SCUs shall communicate with other SCUs inside the facility and their the associated Door Control Devices via a multi-drop RS485 communications link. The SCUs shall be provided with Ethernet interface device for communication to the Millenium server via the UCONN network. The site Controller shall be mounted inside a Nema 1 type enclosure with a front screw cover at a recommended size of 30òx24òx6ò.

3. The control modules for each reader and door combination shall be the Door Control Device (DCD) single card reader controller with two (2) relay control outputs and seven (7) monitoring inputs including four (4) which are supervised.

4. The input module for alarm devices (door position switches and duress buttons) shall be the Input modules for sixteen (16) supervised input points and two (2) output control relays.

5. Monitor each of the SCUs and associated module enclosure for tamper, loss of main AC power, and low battery power alarms. The enclosures shall be lockable.

6. Provide a minimum of 8-hour battery back up during loss of main power. Back-up power shall support all SMS functions including locks, horns, and egress sensors.

7. The Site Control Units and the associated modules shall operate in an off-line mode when there is a communication failure with the host system. Off-line mode shall provide full SMS functionality with no degradation of function, except that the SCU may not be capable of performing functions requiring data transmission to or from other SCUs or the host system. The Site Control Unit shall

automatically upload all events logged since the failure, and accept a download of any database changes, when communication with the host server is resolved.

8. Flash ROM for downloaded configuration programming.

9. The SCUs shall be manufactured by the Millenium Group (no exceptions).

H. Elevator Control Unit (ECU)

1. Description:
   a. Designed to provide access control for a maximum of 16 floors.
   b. Each site controller can support a maximum of 4 Elevator Control Units, giving a maximum of 64 floors per Site Controller.
   c. Each group of elevator control units supports a maximum of 10 elevator readers.
2. Power: [120 V AC, 60 Hz, 1 A, unswitched] [220 V AC, 50 Hz, 1 A, unswitched (export)].
3. Power Supply Output: 5 V DC, 1 A, for local circuit board only.
4. Memory and Clock Backup: 24 hours minimum
5. Relay Outputs: 16 Form C.
6. Contact Ratings: 5 A, 30 V DC; 10 A, 125 V AC; 6 A, 277 V AC.
7. Normal Mode: Energized.
8. Override Input: Normally closed.
9. Unit Address: 4 position dip.
10. Alarm Inputs: 4 unsupervised.
11. Tamper: Built-in switch with activation spring.
12. Provide elevator floor access control for each of the two elevators within this facility.

I. Elevator Control Device (ECD)

1. Description:
   a. Designed to mount inside an elevator car.
   b. Contains reader and communications circuitry to interface with elevator control unit.
   c. Maximum of 10 elevator control devices can be used for each site controller.

2. Power: 9 to 14 V DC, supplied by power cube (local) or central power supply; 80 to 110 mA depending upon reader technology.

3. Power Protection: Reverse polarity, over voltage, transient.

4. Reader Technologies Supported: Marlok key, Wiegand card (any bit format up to 50), ABA/ISO track 2, proximity, keypad, Dallas TouchKey, biometrics.

5. Connectors: 5 mm plug-on screw terminal.

6. Address Switches: Rotary, direct-reading 0 to 9.

7. Communications: Multi-drop RS-485, proprietary protocol.

J. Local Alarm Control Panel

1. A Local Alarm Control Panel (LACP) shall be provided for after-hours intrusion detection. The central station type system shall be manufactured by DSX and shall be interfaced with the Millennium SCUs via relay outputs. After-hour intrusion alarms generated by the Millennium system will be sent via to the campus police monitoring station. The system shall also be integrated with the facilityôs fire alarm system and transmit fire alarm notifications to the campus police monitoring station.

2. Provide one (1) LACP configured for twenty-four (24) inputs (expandable to 48 inputs) and sixteen (16) relay outputs. Output control contacts shall also be interfaced with the Millennium SCUs and also to the Genetec video system via a Mercury input board to provide the camera alarm trigger at the video system. The DSX control panel shall be located in the ENT Facility/Control Equipment Room B04D of the buildingôs basement.

3. The LACP shall be UL Listed for Commercial applications (UL 609, UL 365, UL 639 and UL 1610 and NFPA731).

4. Provide one (1) Alpha-Numeric Keypad at the Lobby entrance for local control and programming of after-hours perimeter alarm zones.

5. The Alpha-Numeric Keypad shall be manufactured by DSX, no exceptions.

6. The LACP shall be manufactured by DSX, no exceptions

K. Equipment Enclosures

1. All enclosures for equipment supplied under these specifications shall be protected against tampering by being equipped with tamper switches or triggering mechanisms electrically compatible with and connected to the alarm system; or fully filled with an epoxy compound.

2. Internal wiring of device enclosures shall be such that the tamper switches and

triggering mechanisms are not bypassed even though the detector itself is operating in the "ACCESS" mode.

3. All controls that affect detection sensitivity shall be located inside tamper resistant enclosure.

4. All enclosures shall be equipped with key locks with Underwriters' Laboratories listed locking cylinders. Provide Owner with 2 keys per enclosure. Similar types of enclosure, e.g., all power supply enclosures, shall be keyed alike.

5. All enclosures shall be equipped with door gaskets. All openings, e.g., for conduit, shall be sealed after installation. Enclosures shall be finished to resist the environment.

L. Door Position Switches (Magnetic Contacts)

1. Devices shall initiate an alarm signal whenever the switch housing is moved as much as 1 inch from the magnet housing.

2. Device housing shall be of cast non-ferrous durable material. Provide reasonable protection against moisture and dust.

3. Mechanism shall be adjustable so that the operating gap between faces of the switch housing and the magnet housing may be adjusted up to 1/2 in. to accommodate installation variances.

4. Switch shall be rated for minimum of 500,000 activations without malfunction.

5. Supply and install Sentrol, 1076 series concealed switches, or approved equal, off-white, for doors. Surface mounted switches may be substituted only after Owner approval. NO CABLE SHALL BE EXPOSED. All wire shall be concealed or in conduit.

6. All door/gate switches shall be installed with end-of-line resistors at the door/gate location.

M. Door Locks and Associated Hardware

1. All door hardware(per Hardware Schedule) including electrified panic devices, transfer hinges, electric locks, magnetic locks, electric strikes, etc., for the Building shall be supplied and installed by others. The security contractor shall be responsible for the wiring of these devices to the IFP and supplying, installing, and wiring all lock power supplies. The security contractor shall be responsible to connect to and test fire alarm interrupt relays to specified lock power supplies.

N. Door Prop Alarm (DPA)

1. Provide door prop alarms for local and remote monitoring of the secure status of the doors as indicated on the Security Device Drawings.

2. A horn within the DPA shall sound (minimum 80dB) and a normally closed alarm output contact from the DPA shall be activated whenever a monitored door is held open beyond a user adjustable time (0-60 seconds.

3. An integral key switch shall be provided for alarm shunt and alarm reset. The key switch shall be incorporated into the faceplate of the DPA.

4. Local alarm and alarm output contact shall reset upon closure of the monitored door.

5. The DPA shall be mounted in the wall adjacent to the monitored door(s) at 42 inches A.F.F. The unit shall mount in a 2 gang electrical box with a minimum depth of 2 ½ inches.

6. Door prop alarm shall be Designed Security, Inc. Model ES411 Series.

O. Power Supplies

1. Low voltage power supplies for locks and cameras shall comply with applicable provisions of local building codes and national electrical code and shall meet requirements of all authorities having jurisdiction.

2. Power supplies shall be mounted at IFP locations in gasketted enclosures and shall be UL listed, labeled or approved. Specification section above for enclosure requirements (tamper switches and locks) is applicable for all power supply enclosures.

3. Power supplies shall be equipped with short circuit protection and overvoltage protection.

4. Lock power supplies shall be equipped with separate fuse for each lock device. For locks which require control from the fire alarm system, provide separate power supplies. Fire alarm system relays shall cut secondary lock power when activated.

5. Lock power supplies shall be equipped with battery back-up to support operation for a minimum of eight (8) hours.

6. Power supplies shall annunciate, via the AC/AM system, failure or malfunction of unit, open or short circuits, loss of main AC power, and low battery power.

7. It shall be the responsibility of the security contractor to connect the power supplies to the buildingôs main power system.

P. Audio Video/Intercom Unit

1. Master station unit to be located at the Loading Dock Office shall consist of the Aiphone model JF-2HD.

2. The loading dock outer door station shall consist of the Aiphone model JF-DVF mount or the wall as shown on the riser and floor plans.

2.6 CLOSED CIRCUIT TELEVISION SYSTEM

2.7 SCOPE

It is the intention of these specifications to set forth the minimum requirements for the performance of an integrated CCTV System to provide highly reliable surveillance and alarm assessment. The CCTV System shall consist of:

2.8 MATERIALS CCTV

A. Identification and Tagging

1. Labels, tags or other permanent markings shall identify all cables, wires, terminal blocks and terminals.

2. All markings shall clearly indicate the function, source and destination of all cabling, wiring and terminals. All markings shall be recorded on as-built drawings.

2.9 EQUIPMENT - CCTV

A. Video Management System

The campus Video Management System (VMS) shall consist of IP cameras and network video recorders (NVR). The IP cameras shall be recorded on NVRs to be located centrally on campus in the public safety communications center. The facilityôs video cameras shall also be displayed on a workstation to be located inside the loading dock office on the first floor. The University has standardized on the Genetec VMS for their campus surveillance solution. The recorded or live video for viewing at the NVR workstation shall be transmitted via the campus network.

A separate Intrusion (central station type) Alarm system manufactured by DSX shall be interfaced with the Millennium SCUs via relay outputs. Select Millennium system perimeter zones and stairway alarm zones and DSX relay outputs shall also be used to provide the camera alarm trigger to the Genetec video system. The Millennium and DSX relay outputs shall be interfaced to an Axis P8221 network I/O module which shall be reside on the network and communicate with the Genetec video system.

The color IP cameras scheduled for the building shall primarily located at the exits and pedestrian entrances of the facility as well as at the elevator lobbies and stairwell entrances to each of the buildingôs floors. The IP cameras shall be powered via the network utilizing CAT 6 cable.

B. Network Video Recorder (NVR)

1. The NVR shall consist of a hybrid network appliance that will support up to 100 IP video cameras.

2. The NVR appliance shall be pre-loaded with the latest version of Genetec Omnicast platform for video surveillance.

3. The NVR appliance shall be compatible and integrated with Genetecôs Federation Security Center which is implemented on the UCONN main campus.

4. The NVR appliance shall support high-quality video with the ability to record up to 100 cameras simultaneously at 2Mbps per camera (or 200Mbps total).

5. The NVR appliance shall be provided with sufficient internal storage to provide 30 days of recording storage capacity for the number of cameras at this location location in H.264 at 4-CIF with 70% motion.

6. Omnicast software shall support side by-side live and recorded playback video, instant replay of any camera on display, support multicast and multi-streaming, digital zoom, camera sequences and save, print and email snapshots.

7. The NVR shall be rack mounted in one of the IT/Security closets within the building.

C. Fixed Interior IP Camera Dome

1. For indoor areas where lighting is constant, the cameras shall be a network enabled mini dome color camera, utilizing a 1/3 type progressive scan CMOS technology sensor.

2. Maximum resolution 1280x1024 (1.4 Megapixels)

3. Visibility enhanced dynamic range with View-DVR

4. The camera shall be manufactured with a tamper-resistant casing and metal encapsulated electronics.

5. Camera domes shall be equipped with a 10BASE-T/100BASE-TX Ethernet interface.

6. Cameras shall provide the option of flush or surface mounted depending upon location (refer to Camera Schedule for exact type).

7. The camera shall be equipped with a progressive scan megapixel sensor, support WDR and shall provide images down to 0.2 lux in day mode and 0.10 lux in night mode.

8. The camera shall be equipped with so called Day/Night functionality and a varifocal DC-iris lens supporting remote zoom and focus (f=3.1mm t0 8.9mm)..

9. Support simultaneous individually configured Motion JPEG and H.264 video streams.

10. Support both unicast and multicast H.264 with support for both Constant and Variable Bit Rate.

11. Support Power over Ethernet according to IEEE 802.3af

12. Provide Sony SNCDH 140 IP camera or approved equal.

D. Fixed Interior IP Camera Domes

1. For indoor areas with variable lighting conditions (first floor main lobby areas and perimeter entrances & exits), the camera shall be a network enabled mini dome color camera, utilizing a 1/3 type progressive scan CMOS technology sensor.

2. Maximum resolution 1920x1440 (3.27 Megapixels)

3. Visibility enhanced dynamic range with View-DVR

4. The camera shall be manufactured with a tamper-resistant casing and metal encapsulated electronics.

5. Camera domes shall be equipped with a 10BASE-T/100BASE-TX Ethernet interface.

6. Cameras shall provide the option of flush or surface mounted depending upon location (refer to Camera Schedule for exact type).

7. The camera shall be equipped with a progressive scan megapixel sensor, support WDR and shall provide images down to 0.7 lux in day mode and 0.45 lux in night mode.

8. The camera shall be equipped with so called Day/Night functionality and a varifocal DC-iris lens supporting remote zoom and focus (f=3.1mm t0 8.9mm).

9. Support simultaneous individually configured Motion JPEG and H.264 video streams.

10. Support both unicast and multicast H.264 with support for both Constant and Variable Bit Rate.

11. Support Power over Ethernet according to IEEE 802.3af

12. Provide Sony SNCDH 220 IP camera or approved equal.

E. Fixed Exterior Rated IP Camera Dome

1. The camera for the Water Lab on the second floor, shall be a network enabled mini dome color camera, utilizing a ½.9 type progressive scan CMOS technology sensor.

2. Maximum resolution 1920x1080 (2.14 Megapixels)

3. Visibility enhanced dynamic range with View-DVR

4. The camera shall be manufactured with a tamper-resistant casing and metal encapsulated electronics.

5. Camera domes shall be equipped with a 10BASE-T/100BASE-TX Ethernet interface.

6. Cameras shall provide the option of flush or surface mounted depending upon location (refer to Camera Schedule for exact type).

7. The camera shall be equipped with a progressive scan megapixel sensor, support WDR and shall provide images down to 0.1 lux in day mode and 0. lux in night mode with IR LED on.

8. The camera shall be equipped with so called Day/Night functionality and a varifocal DC-iris lens supporting remote zoom and focus (f=3.0mm t0 9mm).

9. Support simultaneous individually configured Motion JPEG and H.264 video streams.

10. Support both unicast and multicast H.264 with support for both Constant and Variable Bit Rate.

11. Support Power over Ethernet according to IEEE 802.3af

12. Provide Sony SNCEM 632RC IP camera or approved equal.

F. Network I/O Module

1. The network I/O Module shall provider the interface between the Millennium access

control and DSX alarm systemsô relay outputs with the Genetec video system.

2. Provide 8 configurable I/O interface ports. Input ports: min. -40 V DC, max. 40 VDC. Output ports: Open-drain, max. load 100 mA, max. voltage 40 V DC.

3. I/O functionality: Input trigger, Output toggle/pulse.

4. Security Password protection, IP address filtering, HTTPSa encryption, IEEE 802.1Xa network access control, Digest authentication, User access log.

5. Supported protocols: IPv4/v6, HTTP, HTTPSa, SSL/TLSa, QoS Layer 3 DiffServ, FTP, SMTP, Bonjour, UPnPÊ , SNMPv1/v2c/v3 (MIB-II), DNS, DynDNS, NTP, RTSP, RTP, TCP, UDP, IGMP, RTCP, ICMP, DHCP, ARP, SOCKS

6. Open API for software integration, including VAPIX®;

7. Provide dry contact outputs of each first floor perimeter door form Millenium and DSX alarm points and interface them with the 8 point I/O module.

8. Provide Axis P8221 Network I/O Module or approved equal.

2.10 EMERGENCY/INFORMATION PHONE COMMUNICATION SYSTEM (EPC)

A. General Description

The The unit shall be a vandal-resistant communications device that is a multi-functional, freestanding pedestal constructed of carbon steel, model CB 1-s from Code Blue Corporation, no substitutions. It shall include a high quality, hands-free communications device illuminated by a high intensity faceplate light, a powerful combination blue beacon strobe light and an area light that serve to easily identify it from a distance.

B. Construction

1. The unit shall be a cylinder constructed of ASTM A500 seamless carbon steel structural tube, schedule 20, 12.75ò outside diameter x 0.25ò thick wall, at a height of 108ò and weigh approximately 375 lbs.

2. The unit shall have an internal anchor base plate that is MIG welded 2ò above the base and fabricated with a minimum of 0.50ò thick A-36 grade steel plate. It shall have a 5ò diameter center hole for electrical conduit access. The base plate shall have four oblong holes on an 8ò circular bolt pattern for attachment.

3. An access door measuring 14ò H x 9.64ò W will be placed 10.94ò from the bottom of the base to provide access for mounting to the anchor bolts and connectivity to electrical facilities. The opening shall have a cover plate, which mounts flush and is same steel and radius as the unit. The cover plate shall fit into the opening and have a weather-resistant gasket. The cover plate shall be held in place by two ¼-20 x 1ò counter sunk proprietary fasteners.

4. Tamper resistant proprietary fasteners manufactured for Code Blue Corporation shall be used. It shall not be possible to acquire the custom designed bit from any other source.

5. Two area light openings 10ò high and 17ò wide with 153 degrees of arc each shall be cut opposite each other, with the bottom of the openings approximately 14ò from the top.

    a. A heavy cylindrical lens made of clear UV rated polycarbonate shall be inserted behind the openings and be mechanically and chemically fastened to the interior. The lens shall be fully sealed and treated to prevent damage from ultra-violet radiation, aging, cracking, yellowing or breaking

6. A recessed opening shall be cut at a point beginning 36.6ò above the bottom of the unit. The opening shall be 15.1ò tall at the forward edge and 12.8ò tall at the rear edge, creating a 25-degree angle from the horizontal and an arc of 160 degrees in the face.
    a. The opening shall be enclosed by a 7 gauge steel plate with a single opening for a communication device.

C. Mounting

1. The unit shall be mounted onto four anchor bolts that are set 0.50ò above the concrete. Standard 0.75ò x 24ò galvanized steel anchor bolts, nuts and washers shall be supplied.

2. The concrete foundation shall measure 24ò min x 24ò and the anchor bolts shall protrude 6ò from the foundation.

D. Electrical

1. All electrical components shall have a modular plug for easy service and replacement, and equipped with a fuse for protection from transient voltage conditions.

2. Requires at least 2.5 ampere at 24V AC standard.

E. Lights

1. LED Beacon/Strobe: Located in the dome top assembly with a rating of no less than 270 Lumens/92 candela, it shall have a factory-set flash rate of up to 375 flashes per minute and be programmable. A deep blue UV-rated polycarbonate prismatic refractor shall surround the LED Beacon/Strobe and be used to distribute the light in a horizontal pattern for maximum brightness and visibility.

    a. The communication device shall be factory programmed to activate the LED Beacon/Strobe for the duration of a call.
    b. The LED Beacon/Strobe shall be 5.10ò tall and 5.50ò in diameter

2. Area Light: The LED Area Light shall be protected within the two light openings by a .13ò thick UV-rated polycarbonate lens and be used to distribute the light in a horizontal and vertical pattern.

    a. A reflector disk shall be mounted above to direct light outward and downward.

b. It shall measure 17ò W x 10ò H, with the opening 14ò from the top and an arc of 153 degrees.
c. It shall have a Lumen rating of 852.

3. Faceplate light: LED will direct light onto the communications device and be vandal resistant.

4. The light shall have a lifetime of 100,000 hours.

F. Communications

1. The unit shall have a speakerphone communication device.
   a. IA4100 - Analog: Refer to the IA4100.

2. The unit shall be capable of communicating via third party IP wireless and cellular devices, which can be housed within the unit.

3. EIA/TIA, ANSI, CSA and BICSI cabling or similar standards shall be adhered to for proper operation of devices connected to copper or fiber infrastructure.

G. Finish

1. Four-coat paint process, with zinc-rich primer for corrosion resistance and baked-on polyurethane enamel for maximum gloss and shine.

2. Substrate preparation shall be as required to comply with applicable ASTM impact and adhesion standards: D2794 Direct and Reverse Impact, D523 Gloss @ 60 Degrees, D3359B Cross hatch Adhesion, D1654 Corrosion Creep, D714 Scribe Blisters and D714 Field Blisters.

3. The finish shall be a multi coat system available in 12 standard colors: Safety Blue, Safety Red, Safety Yellow, Midnight Blue, Gloss White, Gloss Black, Medium Bronze, Dark Bronze, British Racing Green, Cardinal Red, Bright Silver and Tiger Orange. Custom colors shall be available. UCONN to select color combination.

4. Minimum coverage thickness of 2.0 mils.

H. Compliance

1. Americans with Disabilities Act (ADA) compliant

2. UL 60950-1 and UL 2017 listed

3. NFPA 72 Chapter 24 (2010)

I. Manufacturer

The Manufacturer shall be Code Blue Corporation model CB 1-S -no exceptions.

PART 3 - EXECUTION

3.1 GENERAL REQUIREMENTS

A. Installation shall include the delivery, storage, setting in place, fastening to the building structure, interconnection of the system components, alignment, adjustment and all other work, whether or not expressly specified which is necessary to result in a tested and operational system.

B. All installation practices shall be in accordance with, but not limited to, the specifications and drawings. Installation shall be performed in accordance with the applicable standards, requirements and recommendations of the National Electrical Code and any authorities having jurisdiction including the ñNational Electrical Contractors Association National Electrical Installation Standards (NECA/NEIS).

C. During the installation and up to the date of final acceptance, the Contractor shall protect his finished and unfinished work against damage or loss. In case of such damage or loss, he shall replace or repair such work at no cost to the Owner.

0

D. All equipment shall be firmly secured in place unless requirements of portability dictate otherwise. Fastenings and supports shall be adequate to support their loads with a safety factor of at least three.

E. All boxes, equipment, etc., shall be plumb and square. The Contractor must take such precautions that are necessary to prevent and guard against electromagnetic and electrostatic hum, to supply adequate ventilation and to install the equipment to provide reasonable safety for the operator.

F. In the installation of equipment and cables, considerations shall be given not only to operational efficiency, but also to overall aesthetic factors.

G. Supply and install all fittings and accessories, whether or not they are specified, required for proper, safe and reliable operation of the system.

H. No exposed equipment shall be installed without approval of design, finish and mounting details.

3.2 CABLE INSTALLATION

A. System cabling shall be provided and installed under this contract.

B. All circuits shall be protected to avoid interruption of service due to short-circuiting or other conditions that might adversely affect the connected devices. Each individual signaling circuit shall be classified as a circuit pair.

C. All cabling in racks, cabinets and junction boxes shall be neatly strapped, dressed and adequately supported. Cable installation shall conform to good engineering practices and to the standards of the most current National Electrical Code. Interconnections within console and the equipment racks for all video components (NVR, and video monitors) shall utilize prefabricated ñthinò coaxial cables to required lengths with BNC connectors at each end.

D. Cables shall be terminated with the proper connector required for the associated operation of the equipment to which it is connected. Screw terminal blocks shall be furnished for all cables that interface with racks, cabinets, consoles or equipment modules. Wire shall be interfaced with screw terminal blocks through the use of spade lugs installed on the cable with an installation tool specifically recommended by the manufacturer of the lug. Evidence of the installation of cables and wires without the appropriate connectors, spade lugs and tools shall be sufficient cause for rejection of the work and reinstallation of the cables or wires.

E. Where cables or wires require soldering, the soldering shall be done using rosin core solder and controlled temperature soldering equipment. Evidence of solder joints not made with rosin core solder or with non-temperature controlled tools shall be sufficient cause for rejection of the work and resoldering of all connections.

F. Every cable or wire shall be labeled or coded at each end. Each terminal of each field terminal strip shall be permanently labeled or coded to show the zone, instrument or item served. Terminal blocks shall be numbered by circuit pairs, such as 1 to 25, 26 to 50, etc.

G. All cables within a rack, console or junction box shall be grouped according to the signals being carried to reduce signal contamination. Separate groups should be formed for the following:

1. Power cables.

2. Video cables and audio cables carrying signals less than 2.0 V p-p.

H. Coaxial cables shall be run in continuous lengths. No splices shall be permitted.

I. Shielded conductors shall be installed in separate steel conduits and shall not occupy the same enclosure with unshielded conductors. Shielded conductors may be grouped together.

J. Where shielded conductors enter a panel or enclosure, and where power wiring exists, provide physical isolation of signal and power conductors. Install sleeve on shield grounds in panels. Conduit connections shall be made to assure no interaction between power and signal circuits.

K. Electrical self-stripping tap and pigtail connectors shall be tin plated brass "U" element contact. Connectors shall be 3M Brand Scotchlok 567 to 577.

3.5 GROUNDING

A. A single system ground point shall be established for the system. This shall consist of a single grounding point to which all grounds shall be connected.

B. The system ground shall be located in the base of the security equipment racks. It shall consist of copper bar sufficient in size to accommodate the required grounds.

C. The system ground is to be connected to the local ground bus by conductors, which has not more than 0.1-ohm total resistance. Under no conditions shall AC neutral either in a power panel or in receptacle outlets be used for a reference ground.

D. Contractor shall provide RF shielding and RF filtering for all systems and components to ensure no interaction with potential RF systems in proximity to the site.

3.6 FINISHES

Equipment finishes shall be manufacturer's standard unless otherwise noted in the specification. All finishes, whether standard or custom, shall be submitted for approval.

3.7 TESTING

A. When the Contractor has completed system tests to his/her satisfaction and when the system record documents, including drawings, operation and maintenance manuals, are complete, notify in writing that the system fulfills the specifications and is ready for acceptance testing.

B. Approved software packages shall be entered into the security computer systems and debugged. The contractor shall be responsible for documenting and entering the initial database into the system. The contractor shall provide the necessary blank forms with

instruction to the owner to fill-in all the required data information that will make up the database. The database shall then be reviewed by the contractor and entered into the system. A copy of the document and a copy of the recorded database on a diskette shall be made available for review on a later date. Prior to full operation, a complete demonstration of the computer real-time functions shall be performed in the presence of the Owner.

C. Upon satisfactory on-line operation of the system software, the entire installation including all subsystems shall be inspected. The Contractor shall perform all tests, furnish all test equipment and consumable supplies necessary and perform any work as required to establish performance levels for the system in accordance with the specifications. Each device shall be tested as a working component of the completed system. All system controls shall be inspected for proper operation and response. The scope of the inspection work shall include, but not be limited to, the following:

1. Document all measured values and control settings for the system. These values and settings shall be recorded in the operation and maintenance manuals and shall be made available at the time of acceptance testing, following the indicated testing procedures.

2. Check each system including all inputs and outputs for compliance with the performance standards.

3. Function of all remote sensors for proper operations and testing of all wiring. The test shall include operating each device as it should operate in normal usage. No operations are to be simulated for this test.

4. Check each control and monitoring function from all origination points to all controlled locations for proper operation.

5. Adjust each piece of equipment as required for optimum quality and to meet the manufacturer's published specifications.

6. Check to insure that all systems are free from spurious oscillation and radio frequency pickup both in the absence of any input signal and also when the system is driven to full output.

7. Establish tentative normal settings for all systems controls. All setup controls shall be adjusted for optimum system performance and shall be marked for reference.

8. Demonstrate the power-up and power-down procedure for each system. These procedures shall be documented and then incorporated into the systems operation manual.

D. All tests shall be documented by the Contractor and shall be witnessed by the Owner and the Ownerôs representative. Following the system test and inspection, the Ownerôs representative shall prepare a list of any outstanding work, which must be completed by the Contractor prior to issuance of the certificate of substantial completion.

E. Upon receipt of the Contractor's notice that all punch list items from previous inspections are complete, the Ownerôs representative shall re-inspect the work for final acceptance. The Contractor shall provide all test equipment, materials and personnel as required assisting in the final acceptance test. The final acceptance test shall consist of the following:

1. The Contractor shall verify that all record documentation is complete.

2. The operation of all system and equipment shall be demonstrated by the Contractor to comply with the contract documents. Both subjective and objective tests may be required by the Owner and the Ownerôs representative to determine compliance with the specifications.

F. Upon completion of the re-inspection, the Ownerôs representative shall either accept the system as being substantially complete or advise the Contractor of work not completed or obligations not fulfilled as required for final acceptance. If necessary, the entire procedure shall be repeated. Time and expenses expended by the Ownerôs representative for additional re-testing (beyond the initial and the first re-test) shall be back charged to the Contractor.

G. The inspections and tests may be suspended at the option of the Ownerôs representative if it is his opinion that major components of the system are defective. The Contractor shall have personnel available at the job site to make adjustments and repairs and take corrective action during the tests.

H. The system shall be accepted as complete when all work has been completed; all remedial work is performed; all documentation is complete, accurate and accepted; and the Owner's personnel has received the specified training.

I. Complete logs of tests shall be retained by the Contractor for inspection and review at any time after the testing has started. Upon final completion of system tests the log records shall be submitted.

J. Submit detailed test checklist and descriptive methodology for approval at least 4 weeks prior to start of test.

- END OF SECTION -

SECTION 28 31 10 - FIRE ALARM SYSTEM

PART 1 - GENERAL

1.1 RELATED DOCUMENTS

A. All of the Contract Documents, as listed on the Table of Contents and including General and Supplementary Conditions and Division 01 General Requirements, shall be included in and made part of this Section.

1.2 DESCRIPTION OF WORK

A. Furnish and install a new microprocessor based, fire alarm, detection and emergency communications system as shown and specified herein.

B. Distributed modular control panels, which utilize digital communications in a network configuration will be used to provide optimal fault-tolerance and support future modification and expansion with a minimum of future wiring and hardware additions.

C. The system shall include all necessary hardware, software and peripheral devices to perform the following functions:

1. Fire detection and alarm
2. Supervising Station service
3. Life safety functions to include:
   a. Emergency Elevator Service
   b. Smoke Management and Control
   c. Interface with related systems

4. Integration with and status monitoring of related systems including:

   a. Fire Pump
   b. Emergency Generators
   c. Fire Protection Systems
   d. HVAC and Automatic Temperature Control (ATC) systems.
   e. In-building Radio Communications Enhancement System.
   f. Two-way (area of rescue assistance) emergency communication system.
   g. Security, communications and information technology systems.

5. Report system events to the Proprietary Campus Reporting System over the existing copper network and the City of Storrs Public Fire Alarm Reporting System via the approved means.

D. Temporary protection during construction, alteration and demolition.

E. System programming and re-programming of all changes as necessary to accommodate the phased construction, alteration and demolition activities.

1.3 RELATED WORK

A. Refer to Section 260510 for work to be included as part of this Section. .

B. Work shall be closely coordinated with related trades, including Division 8 Hardware, Division 21 Fire Suppression, Division 23 and 25 for HVAC/Building Automation, and related work being conducted under Divisions 26, 27 and 28.

C. Carefully examine all of the Contract Documents, criteria sheets and all other Sections of the specifications for requirements which affect work under this Section, whether or not such work is specifically mentioned in this Section.

1.4 REFERENCES

A. The latest published editions of following reference standards shall be used in system design, installation, operation and maintenance unless the applicable legally referenced standard provides more stringent requirements:

1. Connecticut State and Fire Safety Codes – 2005 Edition

2. International Building Code (IBC 2009)

3. Connecticut Electrical Code

4. Connecticut State and Local Fire Prevention Regulations

5. NFPA 70 – National Electrical Code – 2005 Edition, Article 760

6. NFPA 72 - National Fire Alarm and Signaling Code – 2002 Edition

7. NFPA 90A/B and 92 A/B

8. NFPA 101 – Life Safety Code

9. Underwriters Laboratories (UL) Listings.

10. FM Global (Factory Mutual)

11. City of Storrs Fire Department/UCONN Fire Department

12. International Municipal Signal Association Cable Specifications

13. Americans with Disabilities Act (ADA), the Architectural Barriers Act (ABA), and Accessibility Regulations of the local jurisdiction.

B. Each system component shall be UL Listed and FM Approved for its' intended purpose.

C. All control equipment shall be listed to the latest edition of ANSI/UL Standard 864 (9th Edition) - categories UOJZ, UOXX and UUKL as applicable.

1.5 QUALITY ASSURANCE

A. Manufacturers:

1. The campus is serviced by a Simplex Grinnell network of fire alarm panels.

2. All system components shall be the products of Simplex Grinnell, except where otherwise dictated or permitted. In such instances, equipment by multiple manufacturers must be recognized compatible by Simplex Grinnell.

B. Supplier Qualifications:

1. The system supplier shall be a qualified engineered system distributor or factory direct office as stated herein and be recognized as a UL-certified (category UUJS) service company.

2. The system supplier shall demonstrate a minimum of 5 years' experience working with the specific product on projects of similar size and scope.

3. Provide the services of qualified system designers to generate shop drawings, and field technicians to provide installation oversight during construction and system startup. Technicians shall inspect, program, test and make any necessary adjustments to the completed system, to ensure compliance with the manufacturer's recommended practices and the approved shop drawings.

4. The assigned system technician shall be NICET-certified (Level II minimum). System project manager shall be NICET-certified (Level III minimum). Each shall be factory-trained and certified on the specific make/model of the system being installed.

5. The assigned technician shall demonstrate the system during system startup to the satisfaction of the Record Engineer and Owner's representatives, and make any necessary adjustments to the system operation.

C. The Contractor shall provide complete system testing to include integrated testing of related systems and fire safety functions. Testing will be conducted by the installing Contractor and system supplier, and witnessed by the Owner, Architect and the Engineer of Record or their designated representatives.

1.6 WARRANTY

A. Attention is directed to provisions of the General Requirements, Supplementary General Requirements and Section 260510 regarding guarantees and warranties for the work under this Contract.

1.7 SUBMITTALS

A. Provide shop drawings in accordance with the requirements herein and with the Shop Drawings, Product Data and Samples - Section 013300.

B. Submittals shall be clearly marked with the appropriate specification number and content designation to properly identify the material provided.

C. Disposition of shop drawings shall not relieve the Contractor from responsibility for deviations from drawings and specifications, unless the deviations are specifically noted in writing at the time of submission, and written acknowledgement has been received from the Engineer or Record. The disposition of shop drawings shall not relieve the Contractor from responsibility for errors in shop drawings or schedules.

D. Copies of the shop drawings shall be maintained on-site to serve as working documents during installation.

E. Shop drawings shall be prepared in accordance with NFPA 72 recommended practices and include the following:

1. Any exceptions or deviations from the specified features and functions shall be noted and justified in writing. Failure to note any deviations from the requirements stated herein will result in disapproval.

2. Complete point-to-point riser diagrams showing all equipment including size, type, number and reference designations for all circuits and devices. Each device shall be shown with address numbers or any other required field device settings including speaker tap settings and candela rating of notification appliances. Riser diagrams shall consist of:

   a. A complete one-line Network Riser Diagram showing interconnected control panels and intended room locations.

   b. Detailed point-to-point riser diagram(s) showing all equipment, circuits and devices connected to each fire alarm control panel.

   c. Include installation details of all devices and equipment, including elevator details.

3. Scaled drawings of each system panel showing dimensions, internal module placement, field wiring terminations with spare capacity allowances, and any applicable operator's display and panel switch label assignments. Where multiple equipment cabinets are used in a single location these shall be shown together in elevation for coordination of equipment installation and wireways, and to ensure proper space allocation.

4. A complete itemized bill of materials with quantities, descriptions and cross-reference information for all equipment.

5. A complete list of all addressable devices with corresponding address or reference number, device type, and alphanumeric message nomenclature for review and coordination. Note: Final nomenclature may vary from the room designations that are currently shown on the Drawings, and will be subject to review and approval by the Owner, Architect and other Authority Having Jurisdiction prior to system programming.

6. Sequence of Operation: Provide a complete sequence of operation in the form of an NFPA Input/Output programming matrix for the entire system as shown in

NFPA 72. The matrix shall reflect each unique programmed sequence, whether the sequence is initiated by an individual or common group of similar devices.

7. Original catalog data sheets for all equipment, accessories and wiring with applicable components being submitted clearly noted. All equipment shall be subject to approval and no equipment shall be ordered without prior approval.

8. Floor plans showing all devices and equipment to be installed with corresponding field settings, circuit, and device designations noted. Settings shall include the device address and candela rating as applicable. Circuit identifiers, device numbers and symbols used shall be clearly defined and consistent between all related documents.

9. Provide battery calculations to demonstrate the standby power requirements specified herein. Batteries shall be calculated to support the entire rated output of a panel, exclusive of the actual installed load.

10. Provide system calculations for all notification circuits and power supplies. Notification Appliance Circuit calculations shall use the end-loading method described in NFPA recommended practices and be as follows:

    a. Show wire size, estimated circuit length, and maximum allowable wiring distance as designed.

    b. Circuit calculations shall be based upon a 20.4vDC (minimum) battery terminal starting voltage and utilize UL maximum current draw rating for each appliance.

    c. Circuits shall be designed for a maximum 4.4 volt drop.

11. Provide a copy of the Original Equipment Manufacturer's Warranty Statement.

12. Confirmation that qualified representatives of the system supplier will provide on-site project supervision during system installation, startup, testing and training. Field technicians assigned to the project shall be identified and documentation of their qualifications shall be provided upon request.

13. Provide an outline of the vendor's Acceptance and Test procedures including a copy of the supplier's standard Startup and Commissioning checklist.

14. An overview of the proposed training agenda designed specifically for the project.

1.8 RECORD DOCUMENTS

A. Record documents shall be provided in accordance with NFPA 72. The following information shall be assembled into a bound document and submitted for record purposes prior to the request for final payment:

1. Final as built documents with all information included in the shop drawings modified to show the entire system as constructed. Incorporate all changes whether made as a result of change order or any other field modification.

2. Conduit routing shall be shown, identifying the actual installed circuits and pathways.

3. Operation and maintenance manuals with the following information:

   a. Operator's Manual and Troubleshooting Guide

   b. Recommended renewal parts

   c. A list of contact names and addresses for the system supplier and service companies.

4. A hard copy printout and electronic copy of the final site specific system program.

5. Certified NFPA test reports and Record of Completion.

1.9 CIRCUITS AND PATHWAYS

A. Network Communications and vertical trunk wiring

1. All network wiring and audio risers shall be Class A, Style X circuits as defined in NFPA 72, utilizing physically separated outgoing and return loops and Level 2 survivability (minimum).

2. Network communications and all other circuits that serve occupant notification shall have a minimum of Level 2 Survivability in accordance with NFPA 72 and these Specifications.

B. Addressable Signaling Line Circuit (SLC)

1. Vertically-wired addressable loop SLC trunk wiring shall be configured as Class A (style X) circuits with Level 2 survivability (minimum).

2. Horizontal SLC branch circuits shall be Class B wired circuits with a minimum of level 1 survivability.

3. Fault Tolerance: SLC wiring shall utilize fault isolation modules so that a single wiring fault on the conductors serving one floor or evacuation signaling zone will not affect the operation of devices serving any other zone. SLCs shall not exceed 75% of the number of each type of device the circuit is capable of supporting.

C. Notification Circuits

1. Notification Appliance Circuit (NAC) wiring shall be configured as Class A circuits, with a minimum Level 1 pathway survivability.

2. The system shall be provided with a minimum of two (2) NACs for each floor, evacuation zone or smoke compartment; whichever is greater. The actual number of circuits to be installed shall be coordinated with the supplier's shop drawings.

3. Circuits shall be wired such that two adjacent devices are on different circuits.

4. Circuits shall emanate from panel mounted power supply outputs; field-located addressable modules shall not be used to supervise or control notification appliance circuits.

1.10 **SUPERVISION**

A. The protected premises system shall be completely monitored for integrity and supervised by an approved Supervising Station including University of Connecticut TSW-2 Proprietary Campus Reporting System in accordance with applicable Code and as specified herein.

B. Each component or circuit shall be individually supervised, to provide the following:

1. Report of failed or missing electronic components.

2. Report of any off-normal system conditions.

3. Failure of power supply, battery charger and standby batteries.

4. Loss of signal from an addressable device.

5. Report a single Open circuit condition.

6. Report a single short circuit condition.

7. Report a single short to ground condition.

8. Loss of communications to the Supervising Station.

1.11 SYSTEM OPERATION

A. Normal Operation

1. Under normal operation each system display shall present a "SYSTEM IS NORMAL" message with the current time and date.

2. The system shall continually monitor all wiring and devices for changes in status and report events as described herein.

3. All system events shall be stored in system memory, recorded on the system printer(s), and be transmitted to responsible personnel via network reporting or other designated means as described herein.

B. Alarm Initiation: The following events will initiate an Alarm condition:

1. Manual fire alarm pull station

2. Automatic smoke or heat detector

3. Fire protection system water flow switch

4. Other designated alarm initiating device

5. Designated smoke detectors shall be subject to an alarm verification sequence as follows:

   a. A device that reaches its' predetermined alarm threshold will reset for an approved verification period (10-60 seconds). If the condition remains or a second alarm is reported within the verification period, the system shall process the alarm sequence without delay. Otherwise, the system shall resume normal operation.

   b. Devices shall be capable of being divided into verification groups, whereby only devices within the same group will verify the alarm.

C. Alarm Operation: Any alarm event shall initiate the following

1. Sound an audible alarm signal and flash a common alarm LED at all system displays.

2. Record the event in the system history file and present the assigned text-based event message including device address, type, location and status with time and date at each system display.

3. The appropriate alarm LED shall light on the LED annunciator display.

4. Transmit the event to the University of Connecticut TSW-2 Proprietary Campus connection to the monitoring campus Telecommunications backbone.

5. Transmit the event to the Public Fire Alarm Reporting System via local energy Fire Alarm Master Shunt Box.

6. Activate a uniform temporal code 3 evacuation signals throughout the building.

7. All visible alarm notification appliances shall flash in a synchronized fashion throughout the evacuation area.

8. Doors in the building normally held open by door control devices shall release.

9. The exterior beacon shall operate.

10. Upon activation of designated detectors, close all associated motor operated fire and smoke shutters serving the area of alarm origin.

11. Automatically unlock, but not unlatch, all locked stairwell doors simultaneously.

12. Activation of duct-mounted or area smoke detectors associated with HVAC systems shall cause all associated equipment to stop/start, open or close as applicable. Refer to detailed sequencing as described herein and required by Related Trades.

D. Trouble Condition

1. All off-normal system conditions, including the following shall activate Trouble condition:

   a. Loss of Primary Power.

   b. Low battery or battery fault condition.

   c. Device missing/fault.

   d. Open circuit wiring fault.

   e. Short circuit wiring fault.

   f. Short to ground wiring fault.

   g. Any manual override switch placed into an “off-normal” position.

   h. The failure of any monitored Fire Safety function to take place.

   i. Loss of connection to the Supervising Station.

   j. In-building two-way emergency communications system fault.

2. Activation of a trouble condition shall:

   a. Record the event in the system history file and present the specific fault (by status, component and circuit as applicable) at each system display and the remote Supervising Station.

   b. Activate a common trouble audible/visual signal at each system annunciator and the remote Supervising Station.

E. Supervisory Condition

1. The following conditions that indicate an impairment of the system operation and the need for action will initiate Supervisory event reporting:

   a. Activation of any standpipe valve supervisory (tamper) switch

   b. Activation of any sprinkler valve, fire protection or supervisory (tamper) switch

   c. Activation of a duct-mounted smoke detector

d. Other designated pre-alarm or Supervisory event.

2. Activation of a supervisory event shall:

a. Record the event in the system history file, transmit the event to the approved Supervising Station and comply with the Owner's requirements for event reporting.

b. Identify the specific event on each system display and the remote Supervising Station, accompanied by a common Supervisory LED indicator and audible tone.

3. Restoration of a Supervisory device to its normal condition shall cause the supervisory LED to extinguish and the audible signal to pulse indicating the restoration to normal condition. The restoration shall likewise be recorded in the Event History file.

4. Activation of duct-mounted or area smoke detectors associated with HVAC systems shall cause their associated equipment to stop/start, open or close as applicable. Refer to detailed sequencing as described herein and required by Related Trades.

F. Event Acknowledgement

1. Acknowledgement of a system event shall cause the next abnormal condition to be presented on the system display; message scrolling buttons shall provide for a user-friendly method to review system events.

2. As a minimum, an acknowledged supervisory or trouble condition shall resound every 24 hours in accordance with applicable code to act as reminder that the fire alarm system is not 100% operational.

G. Alarm Silencing

1. When the "ALARM SILENCE" button is activated all audible and visual evacuation signals shall cease operation. Subsequent alarms shall reactivate the notification sequence.

H. System Reset

1. The SYSTEM RESET button shall attempt to return the system to its' normal state after an alarm condition has been resolved. During the Reset procedure, the Operator's display shall read "SYSTEM RESET IN PROGRESS", followed by the message, "SYSTEM RESET COMPLETED", and finally "SYSTEM IS NORMAL" upon a successful System Reset.

2. Should an alarm condition remain during an attempted Reset, the message "SYSTEM RESET ABORTED" will be presented and the system will remain until the condition is resolved.

I. Carbon Monoxide (CO) Protection

1. Activation of a CO Detector shall cause the following to occur:

a. Transmit a Priority 2 Supervisory Carbon Monoxide Alarm to the Supervising Station as required.

b. Display the assigned message text including device type, location and status at all system displays.

c. An audible and visual Priority 2 signal shall be activated at each system display.

d. If required, sound a 'temporal code 4' CO alarm signal in the area of origin, in accordance with NFPA 720 and applicable code.

e. Where associated with Air Handling Units or other equipment equipped with an integrated shutdown device, CO Alarm activation shall send signals to initiate shutdown of the equipment as dictated by applicable code.

J. System Operation During Loss of Normal Power

1. Upon loss of primary power, the green "AC Power On" LED shall extinguish, and a Trouble condition shall be reported.

2. All doors normally held open by door hold-open devices that are powered from the Fire Alarm System shall release following a 15-second delay.

K. Manual System Operation

1. A manual evacuation (drill) switch shall be provided at the main fire alarm control unit to initiate drill sequence and occupant notification without causing other control circuits to be activated or off-site reporting to be initiated.

2. Drill functions shall include the ability to conduct partial evacuation (by initiating zone) and building-wide evacuation drills.

3. Should an actual alarm occur during a drill, the drill shall be automatically canceled and the building alarm sequence shall commence immediately.

1.12 FIRE SAFETY FUNCTIONS

A. Emergency Elevator Functions

1. Elevator Recall and Emergency Service shall be conducted in accordance with NFPA 72, ANSI/ASME A17.1 and applicable code.

2. In addition to the alarm sequence described, the activation of automatic initiating devices located within elevator lobbies, elevator machine rooms or elevator hoistway shall initiate the appropriate emergency elevator functions.

3. Recall: Each elevator cab shall be captured separately and recalled to the main egress level. If the alarm originated on the main egress level, the elevators shall be recalled to the designated alternate level.

4. Hoist way ventilation: Activation of any automatic detector associated with the elevator shaft or machine room shall actuate each associated shaft ventilation damper.

5. Fire Warning Indicator: The activation of any automatic detector within an elevator machine room or elevator hoistway shall flash the fire hat indicator in each associated elevator cab.

6. Power Disconnect: The activation of a heat detector sprinkler head located within an elevator machine room or hoist way shall initiate shut down of elevator power in accordance with applicable code. Power disconnect shall be subject to the appropriate time delay sequence, and be closely coordinated with related trades.

B. Firefighter's Override:

1. Provide manual override H-O-A switches and status indicating lights for all HVAC equipment that will be subject to manual override from the main FACP/FCC location.

2. Each switch shall have 3-positions to support manual On ("hand"), Off and Automatic control functions. Each switch shall have a green "On" and a red "Off" status indicators corresponding to their respective switch positions.

3. Each switch shall send override signals to the associated equipment and receive end-status feedback from the controlled system to illuminate each status indicator.

4. Provide output signals for each required H-O-A switch position to corresponding Building Automation/Automatic Temperature Control (ATC) Interface termination points. The ATC Contractor shall wire from the ATC Interface to the Building Automation System to initiate control of each of the following:

a. All supply fans and air handling units.

1) AHU-1, AHU-2, AHU-3, AHU-4, AHU-5

b. Designated exhaust fans and air handling units.

1) EF-1, EF-2, EF-3, EF-4, EF-5, EF-6, EF-7, EF-8

c. Manual override of each smoke control sequence by smoke compartment.

d. Manual control of any smoke purge sequence.

e. Other related systems and equipment

1) **[List Dampers or other Equipment here]**

5. UL category UUKL listed components and modules shall provide Alarm, Manual Stop and Manual Start signals and status feedback between the FA System and each controlled device. Signals shall be wired directly to **[the ATC system controller] [the controlled equipment]**.

6. Coordinate all work with Division 251000. The Electrical Contractor and Fire Alarm system supplier shall coordinate the number of required H-O-A switches with the ATC supplier and Mechanical Contractor. The ATC Contractor shall wire and program these signals to command control of the designated HVAC equipment listed herein.

7. All LED indicators shall be programmed to report status feedback of the controlled equipment via from a dry contact signals generated from the **[equipment controller] [building automation/ automatic temperature control (ATC system].**

8. All signals and wiring shall be supervised and installed in accordance in accordance with NFPA 72, NFPA 90A and applicable code.

9. In addition to the H-O-A switches required above, furnish and install (10) spare H-O-A switches for future use.

10. HVAC air handling units, consisting of supply and return fans shall have separate H-O-A switches for each fan.

11. HVAC air handling units (such as supply air handling units or exhaust air handling units) consisting of multiple fans in parallel, in a common unit, shall have one H-O-A switch for the unit to control both fans simultaneously.

C. Fire/Smoke Damper Interface

1. Provide supervised output signals to initiate control of each Fire/Smoke or Smoke Damper shown on the Contract Documents. Signals shall consist of a programmable output with dedicated multi-voltage power relay selected, listed and rated for the application.

2. Provide addressable monitor modules and status feedback from each Fire/Smoke or Smoke damper to show actual damper status (open and closed), where manual override or programmed Damper control functions are required.

3. Sequencing and control of dampers and related equipment shall be closely coordinated with mechanical trades, to include shutdown of fans and timed closure of associated dampers.

D. Security System Interface

1. In addition to the alarm condition operation described above, the system shall send event signals, via auxiliary dry contact closure corresponding to each floor or evacuation zone or point-specific serial data to the building security system.

2. Activate signals to unlock secure egress doors or bypass any other special locking arrangements – subject to coordination with the Owner's security requirements and applicable Code.

E. Audio/Visual and Lighting Control System Interface

1. In the event of an alarm condition, the system shall send signals to the audio/visual systems and lighting systems in auditoria, lecture halls, classrooms, etc. in the evacuation area, to disrupt sound systems and bring lighting up to full illumination.

1.13 STATUS MONITORING OF RELATED SYSTEMS

A. Provide the necessary hardware, wiring and programming to supervise the following:

1. Future fire pump (running, power loss/disconnect and phase reversal)

2. Emergency generator (ON, start failure, low fuel and low oil pressure)

3. Automatic transfer switch(es) (normal, emergency, by-pass)

4. Sprinkler valve tampers by device

5. Standpipe valve tampers by device

6. Fire Protection Systems, including Clean Agent and Pre-action systems, for Alarm, pre-alarm, Supervisory and Trouble Conditions.

7. Two-way radio enhancement system (amplifier fail, antenna fail, AC Power, charger and battery fail).

8. Two-way (area of rescue assistance) emergency communication system.

9. Other designated systems and equipment.

1.14 SYSTEM PROGRAMMING

A. The system shall support complete on-site programming to enable editing of special instructions and operating sequences. All software operations shall be stored in a non-volatile, resident memory within each fire alarm control panel.

B. The system supplier shall include a minimum of two (2) additional system reprogram procedures to allow operational changes during system startup.

1.15 SYSTEM TESTING

A. Walk Test

1. The system shall support "walk test" functions, which will operate as follows:

a. The public fire alarm reporting and Supervising Station connections shall be bypassed as permitted by the local authority having jurisdiction.

b. All control panels shall show a trouble condition.

c. The activation of any alarm initiation device shall sound a single round of temporal code 3 signal.

d. The panel shall automatically reset itself after signaling is complete.

e. The system shall be divided into multiple walk test groups such that only a portion of the system will be impaired during testing.

f. In the event of alarm activation outside the active walk-test group area, testing shall be automatically cancelled, any bypassed functions shall be re-engaged and the building-wide alarm sequences shall commence without delay.

g. The manual pull station nearest the Main FACP shall be on a separate walk-test group, so that in the event that an emergency takes place during testing, the test will be aborted and the alarm sequence will be initiated immediately without delay.

h. Upon completion of any system test, the responsible testing company shall verify the restoration of Supervising Station reporting in accordance with NFPA 72 requirements.

1.16 ACCESS LEVELS

A. The system shall accommodate multiple levels of operator access to maintain secure system operation. Basic system actions such as Acknowledge, Silence, and Reset shall not require a passcode.

B. Passcodes shall consist of a minimum of four (4) digits. Changes to passcodes shall be made by authorized personnel only.

C. When a correct passcode is entered, the message "ACCESS GRANTED" shall be displayed. The new access level shall be in effect until the operator manually logs out or the keypad has been inactive for 10 minutes.

D. Access to a level will allow the operator to perform only actions assigned that level or lower.

E. The following functions shall have access levels associated with them:

1. System Reset

2. Set Time/Date

3. Disable/Enable

4. Clear historical logs

5. Walk Test

6. Change device sensitivity or alarm verification parameters

PART 2 - PRODUCTS

2.1 FIRE ALARM CONTROL PANELS

A. Provide distributed, microprocessor-based 4100 ES Fire Alarm Control Panels in the locations shown on the drawings. Panels shall be of modular construction, engineered, configured and sized to accommodate the area served. Panels may consist of multiple equipment cabinets according to the vendor's shop drawings and the requirements stated herein and shall include expansion capabilities and spare capacities to allow future additions without the need to replace an entire control unit.

B. Fire Alarm Control Panels (FACP) may be designated as Main or Remote Transponder Panels, and include all required modules such as addressable loop interface, power supplies and standby batteries to support the system operation specified herein. Each FACP/FATP shall include the following as a minimum:

1. Audio Controller with the ability to generate the pre-recorded system messages and tones.

2. Addressable Loop - Signaling Line Circuit (SLC) interface module to support a minimum of 250 addressable points each.

3. One Hundred (100) watts of primary audio amplification with back-up amplifiers. Power from each amplifier module shall be distributed over a minimum of six (6) individually programmable on-board speaker circuits.

4. Eighteen (18) amps of 24vdc System Power to support system power and visual (strobe) Notification Appliance Circuits.

5. A minimum of six (6) strobe circuits, with a total number of circuits as specified and required.

C. The system shall be designed such that in the event of a network communications failure, any remaining interconnected panels will operate as a sub-network and any isolated panels will operate in standalone mode. Upon communications failure, a trouble condition will be reported across the network and the disconnected panel shall continue to function in standalone mode.

D. The main FACP and designated remote transponder panels shall include a complete Operator's Interface with common control switches with all primary controls that are essential to the system operation during an event, including:

1. Public or off-premises reporting bypass switch.

2. Local manual evacuation (drill).

3. Local door holder release bypass.

4. Audible/Visual evacuation signal disable.

5. Individual bypass switches for Emergency Elevator functions.

6. The ability to enable and disable of each monitor and control point individually.

7. Walk Test enable.

8. Manual override (H-O-A) Switches.

E. Individual LED indicators and bypass switches for each duct-mounted smoke detector and type of initiating device (smoke, heat, manual station, water flow, tamper) on a per zone basis. The following primary controls shall be visible through a front access panel of the Main panel and each designated Remote FACP:

1. 80 character alphanumeric display (minimum).

2. Common Alarm, Trouble, Supervisory and Power On indicators.

3. Related system status indicators.

4. Event acknowledgement switches.

5. Alarm silence switch.

6. System Reset switch.

F. RS-232 Serial Output

1. Each FACP shall be capable of supporting multiple EIA RS-232-C outputs.

2. Provide a minimum of two (2) RS-232-C ports integral to the Main FACP and designated remote transponder panels to support operator workstations or event printers.

G. Equipment Enclosures

1. Provide cabinets of sufficient size to accommodate all equipment, constructed of code gauge steel and equipped with locks keyed alike all other fire alarm equipment. Panels that include an Operator's Display shall have a transparent

door panel allowing full view of the various lights and controls. Secondary cabinets that do not include operator's controls shall be solid construction. Color of cabinets shall be red.

2.2 SYSTEM POWER SUPPLIES

A. Power Supplies

1. System power supplies will receive 120 volt AC power from the building power and provide 24Vdc primary operating power to the fire alarm system.

2. Individual power supply modules shall provide 9 amps of filtered, regulated 24 volt DC system power to each panel. A sufficient quantity of power supply modules shall be integral to each FACP to provide adequate power to all equipment and devices served by the particular panel.

3. Panel power supplies shall have integral battery charging circuits as described herein to support standby batteries. External battery chargers are permitted where otherwise required.

4. External standalone system power supplies will not be allowed unless specifically shown on the Drawings.

B. Standby Batteries

1. Standby batteries shall be sized to operate the system upon loss of normal power for a period of twenty-four (24) hours of supervisory operation, followed by fifteen (15) minutes of alarm, plus a minimum of 20 percent spare capacity.

2. Cable size and distance between the batteries to the control panels shall be determined and included in the shop drawings to demonstrate acceptable voltage drop calculations.

3. Provide rechargeable, sealed lead-acid batteries.

4. Batteries shall be of identical voltage, model number, appearance to allow connections in series to produce a system voltage of 24 volts DC. Batteries shall be permanently marked with the date of manufacture and installation.

C. Battery Charger

1. The battery charger shall automatically charge and monitor the condition of the batteries. The charger shall be dual-rate type with a combination high rate/float maintenance rate which is capable of recharging fully discharged batteries up to 70% charge within 12 hours.

2. The charger shall include a green "Charger On" LED, a yellow Charger Trouble" LED and a red "High Rate" LED. The charger shall also include battery voltage test points and a fuse for over-current protection.

2.3 AUDIO CONTROL AND AMPLIFIERS

A. Provide a multi-channel audio controller, paging microphone and audio control select switches integral to the main Fire Alarm Control Panel and designated Remote Transponder Panels and each remote annunciator. Audio controllers shall provide digital transmission of multiple simultaneous audio channels to distributed amplifiers located in system panels.

B. Pre-recorded messages and tones shall be as follows:

1. The pre-signal alert tone shall be a coded 4-4-4 900Hz tone.

2. The evacuation tone shall be a 470Hz uniform temporal code three signal.

3. As a minimum, the following audio messages shall be distributed over a minimum of eight (8) separate audio channels:

   a. Evacuation Message

   b. Alert Message

   c. Manual Page

   d. Standby Message

   e. All Clear Message

   f. Drill Message(s)

   g. Test Message(s)

   h. Spare

4. Audio amplifier modules shall be integral to the main Fire Alarm Control Panel, each Fire Alarm Transponder Panel and each remote annunciator. Amplifiers shall have a dedicated power supply, transformer and speaker circuit outputs. Amplifiers shall provide 25 VRMS or 70 VRMS output with a frequency response of 120 to 12,000 Hz.

5. Provide a sufficient quantity of amplifiers and circuits to operate all system speakers simultaneously plus a total of 25% spare capacity. Amplifiers shall be sized to accommodate each speaker set at one (1) watt tap and each high output speaker at 8 watts plus a minimum of 25% spare.

6. Each amplifier shall process multi-channel audio signals that originate from the Main Fire Alarm Control Panel or designated remote panels.

7. Each amplifier shall provide 50 watts of audio power and no less than 3 speaker circuit outputs. Provide a minimum of two (2) amplifier modules integral to each Fire Alarm Control Panel.

8. Each panel shall be provided with redundant amplifiers or a floating back-up amplifier to serve audio circuits in the event of an amplifier failure. Where floating backup amplifiers are provided, one backup amplifier may be provided per cabinet, but each backup will serve no more than two (2) amplifier modules.

2.4 ONE WAY EMERGENCY VOICE COMMUNICATIONS

A. One-way voice paging shall be accomplished through a push-to-talk paging microphone located at the Main Fire Alarm Control Panel, designated remote transponder panels and remote annunciator panels. Provide audio control switches at each location to selectively activate or bypass signals to individual areas on a selective or All Call basis.

B. The system shall support an auxiliary audio paging input(s) from the facility general paging and telephone systems. These inputs will be assigned a low priority and support general purpose paging without causing unwarranted trouble conditions. Prioritization of signals may be otherwise required, consistent with approved Mass Notification plans and procedures.

C. The microphone shall be a dynamic communication type with a frequency range of 200 Hz to 4,000 Hz and shall be equipped with 5’-0” retractable coiled cord. An LED shall be provided to indicate the microphone push-to-talk button has been pressed and speaker circuits are ready for transmission.

D. Manual Voice Paging

1. The system shall be configured to provide selective manual voice paging and initiation of prerecorded messages to individual or selected groups of evacuation signaling zones.

2. Upon activation of any speaker manual control switch, two (2) seconds of tone (different from the Alert Tone or Evacuation tone) shall sound throughout the selected area, indicating an impending voice message will occur.

3. Once a paging area is selected, the operator shall be able to broadcast a prerecorded message or make announcements via the push-to-talk paging microphone to the selected area.

4. The system shall support multi-channel audio operation, whereby the act of manual paging or broadcast to a selected building area will not disrupt any signaling taking place in other building areas.

5. The system will provide manual emergency paging on a selective basis to each evacuation signaling zone and an All-Call basis throughout the building.

6. The system shall support constant supervision of speaker circuits to allow general non-alarm paging without causing an off-normal (Trouble) condition.

E. Provide area paging selector switches with LED indicators for each evacuation zone as follows:

1. Level 1

2. Level 2

3. Level 3

4. Level 4

5. Level 5

6. Stairwell #A

7. Stairwell #B

8. All Call

F. Speaker circuits serving each building area or evacuation zone shall be configured and programmed to broadcast a distinct audio channel.

2.5 BUILDING LAN NETWORK INTERFACE

A. Building Network Interface Card (BNIC) – Provide a network interface card with two external Ethernet ports to securely bridge the 4100ES panels with an external network (e.g. the building network) allowing access to the external network and to any other 4100ES/4010ES panels that are on the external network. The BNIC shall alow the following functions to be performed while providing secure authenticated communication:

1. Direct connection to the front panel Ethernet service port.

2. External network connectivity (two external Ethernet port connections).

3. Execution of computer port commands to panels on the external network.

4. 3rd party interfaces using the computer port command line interface across the external network.

5. Ethernet interface to Simplex software applications such as Service Gateway.

6. Recovery of site specific programming details (job files) from a panel on the external network.

2.6 NETWORK NODE CARD MEDIA INTERFACE

A. Provide network interface cards with the capability for multiple types of network media. Cards shall accept plug-in modules for:

1. Twisted Shielded hard copper.

2. Telephone Line

2.7 OFF-PREMISES REPORTING

A. Proprietary Supervising Station - Campus Network Reporting

1. Provide connection to the Campus Network to allow multiplex communication to existing Simplex TrueSite Workstation at the Campus Public Safety Proprietary Receiving Station. Ensure system supervision and event reporting complies with Owner requirements and applicable Code.

2. Provide all necessary hardware modification and system programming to ensure all new equipment and devices are integrated into the existing system reporting system. Work shall include programming of computer graphic workstations to include point-level annunciation of system events and control of system devices.

3. Coordinate all required connections and hardware performance characteristics, to ensure these are consistent with the manufacturer's installation requirements.

2.8 REMOTE ANNUNCIATOR WITH MIC

A. Furnish and install Remote system annunciator panel(s) where shown and required. Each annunciator shall provide a minimum 80-character alphanumeric display with message scrolling buttons, key-enabled common control switches (Acknowledge, Reset, Alarm Silence, Panel Silence), four user-programmable auxiliary control switches, and be wired in tandem with the Main Fire Alarm Control Panel.

B. Provide a passive graphic map adjacent to the annunciator, depicting the architectural layout of the building with stairwells, elevators, corridors and egress points shown. The map shall also show the relative locations of each Control Panel, future Fire Pump and Fire Department connections.

2.9 FIREFIGHTER'S OVERRIDE

A. Provide manual override H-O-A switches and indicating lights for each controlled piece of HVAC equipment shown and specified. Switches shall have corresponding discrete outputs programmed to command manual override functions, and receive direct feedback to show actual status of the controlled equipment on corresponding status indicators.

B. The Electrical Contractor shall provide a fire alarm input and output modules at each piece of HVAC equipment subject to manual override or automatic control in the event of Fire Alarm activation. Coordinate the location of the equipment with the electrical and mechanical contractors. Control signals shall be supervised; the distance between any unsupervised FA relay and the equipment being controlled cannot exceed 3 feet per applicable Code and NFPA requirements.

C. All H-O-A switches shall have 3-positions to support manual On (“hand”) and Off, and Automatic control functions. Each switch shall have a green "On" LED and a red "Off" LED with separate supervised remote inputs for monitoring and displaying the status of the controlled equipment. A Fault indicator light will identify a Faulted condition when any associated equipment or sequence fails to take place within the allotted time period.

1. All LED’s for the status monitoring of the equipment shall be wired to show the actual status, "On" or "Off", of the controlled items via signals from a dry set of contacts generated from the ATC system. H-O-A switches shall be provided for control of fans at the main fire command center as indicated below:

a. All supply fans and air handling units

b. All exhaust fans and air handling units

c. All return air fans and air handling units.

d. Smoke Dampers

e. Fire smoke Dampers

2.10 HVAC/ATC INTERFACE

A. Signals and wiring between the Fire Alarm and HVAC Control Systems and equipment shall be coordinated with Division 25, and installed in accordance with all applicable codes and standards.

B. Interconnections between systems will take place at both field-located addressable modules and an ATC Interface Cabinet.

1. Field-located addressable modules shall be used for all smoke control and related manual override functions to ensure compliance with the requirements for supervision.

2. An ATC interface cabinet shall serve as a demarcation point for all other signals between the Fire Alarm and HVAC/ATC Systems.

C. Signals, sequencing and overrides shall be as follows.

1. Provide discrete outputs from the Fire Alarm System to the ATC system corresponding to each automatic initiating zone, and the activation each duct-mounted smoke detector.

2. Wiring from the Fire Alarm output modules to the ATC equipment controller will be provided by the ATC contractor to allow for the following operation:

a. When the H-O-A switch is in the “AUTOMATIC” position, the controlled equipment shall operate as directed by the ATC system.

b. When the H-O-A switch is in the “HAND” position, a signal shall be sent to the ATC equipment controller to bypass control of the selected equipment and turn the controlled equipment on. The controlled equipment shall continue to operate until the H-O-A switch is restored to the “AUTOMATIC” or “OFF” position.

c. When the H-O-A switch is in the “OFF” position, a signal shall be sent to the ATC equipment controller to bypass control of the selected equipment and turn the controlled equipment off. The controlled equipment shall remain in the off condition until the H-O-A switch is restored to the “AUTOMATIC” or “HAND” position.

d. Manual override signals shall be subject to all required safety functions.

D. Initial automatic and manual control signals will be generated and sent to the controlled equipment by the Fire Alarm System. Actual control sequencing shall be conducted by the ATC System to ensure proper system operation.

E. HVAC air handling units or fans serving as supply, return or exhaust fans shall have separate H-O-A switches for each device.

F. HVAC air handling units or fans consisting of multiple fans, in parallel, in a common unit, shall have one H-O-A switch that is intended to control both fans simultaneously.

G. Status signals between the Firefighter’s Override Switches or Smoke Control Panel and the ATC system shall be provided for all equipment that is subject to manual override. In each instance, the ATC system shall confirm the actual equipment or sequence status (on, off, fail) and provide corresponding signals to illuminate the appropriate LED at each H-O-A switch.

H. The Contractor shall to coordinate with the Mechanical, ATC and Fire Alarm system suppliers to ensure the proper rating (amperage and voltage) and contact types are provided between systems to accomplish the above.

I. Coordinate life safety, smoke control, fire alarm and fire protection zoning to ensure proper signals and sequencing are affected.

J. Activation of H-O-A switches shall generate a system Trouble condition as described herein.

K. All dedicated smoke control functions and equipment shall be supported by Uninterruptable Power Supplies (UPS) for a minimum of 15 minutes. Each UPS shall be provided with the required surge suppression.

L. All life safety fan power to HVAC equipment must be monitored ahead of the motor controller. The disconnect switch position must also be Supervised and transmitted as a Supervisory signal to the ATC and Fire Alarm System and Supervising Station.

2.11 SYSTEM INTERFACE MODULES

A. General

1. Addressable loop interface modules shall support signaling line circuit (SLC) communications with addressable devices.

2. All alarm initiating devices, monitor and control points shown and specified shall be addressable devices with analog features as specified herein. The SLC shall communicate with the system CPU to continually poll each device for normal, abnormal, shorted, and open line conditions.

3. Each addressable device must be identified by a distinct address code and device labels (identifying the device type, status and location) consistent with the reviewed shop drawings, coordinated address listing and final signage plans.

B. Monitor Module

1. Monitor modules shall supervise and monitor the status of non-addressable, dry contact devices such as sprinkler water flow, valve tamper (supervisory) switches, pressure switches, automatic transfer switches, two-way emergency communication system and related systems.

C. Control Module

1. Control modules shall provide programmable outputs to supervise the initiation and control of auxiliary devices and related fire safety functions. Functions shall include the control of building fans and dampers, emergency elevator functions, door release and any other fire safety functions shown and specified.

2. Control modules shall provide a supervised form C output rated for 2 amps @ 30VDC (resistive) or .5 amps at 120VAC (resistive) or .25 amps @120VAC (inductive) and will serve as a pilot-duty relay intended to operate external power relays to perform auxiliary control functions.

D. Multi-Point I/O Modules

1. Provide programmable multi-point Input/Output Modules where required for a combined control output and status input monitoring on a single device to initiate fire safety functions. As a minimum, each module will provide a dry contact output rated for 2 amps @ 30VDC (resistive) or .5 amps at 120VAC (resistive) or .25 amps @120VAC (inductive), and a minimum of one status feedback monitor point capable of supervising a dry contact device. Other multi-point configurations shall be provided to meet the particular project requirements as shown on the plans and described herein.

E. Control Relays

1. Provide multi-voltage Power Relays as needed to support Fire Safety control functions and the proper isolation of control circuit wiring from addressable Modules. Each power relay shall be polarized and operate from a 24VDC nominal input voltage and provide an output contact rating of 20 amps at 120VAC. Relays with an output rated for 20amps or more shall have individually fused outputs.

F. Analog Input Module

1. Provide an addressable 4-20ma Analog Input Module where shown and required to report the status of related analog sensors. Each module shall support a minimum of two alarm set points, in addition to a trouble signal that will be reported when the input falls outside the programmed range.

2.12 INITIATING DEVICES

A. Area Smoke Detector

1. Smoke detectors shall be analog sensors that utilize photoelectric-type sensing principles mounted within a smoke chamber to detect particles of combustion.

2. The control panel shall continually analyze the analog signal from each sensor to determine calibration, sensitivity and environmental changes that may affect sensor operation. The analog values from each device shall be displayed (in terms of percent of obscuration) at the control panel upon command.

3. Smoke detectors shall utilize bases that are interchangeable with other devices such as ionization or heat sensors and other multi-sensor or multi-criteria devices.

4. Each detector's sensitivity shall be individually adjustable within a listed range from .2% to 3.7% obscuration per foot, and have the ability to define multiple set points within the range. Should a sensor reach a predetermined alarm or pre-alarm level, a discrete signal will be annunciated as directed.

5. Each detector shall include an LED that will flash periodically to indicate an active polling cycle. When the sensor reaches a predetermine alarm threshold (2% obscuration unless otherwise directed), the detector shall latch in LED shall flash continuously until reset at the control panel.

6. Smoke detectors shall be capable of operating a remote alarm indicator, auxiliary relay or an audible base. These devices shall be capable of being activated by the associated detector or any other programmed sequence.

7. Where noted, Ionization-type sensors shall be provided in lieu of photoelectric devices.

B. Duct Smoke Detectors

1. Duct-mounted smoke detectors shall be analog sensors as specified above, installed and designed for detection of smoke in heating, air conditioning and ventilation (HVAC) ducts in accordance with applicable Code and NFPA 90A.

2. Where sampling tubes are used, the duct smoke detector shall include housing and sampling tubes that extend into and across the duct of the HVAC system with all related installation hardware. When fans are operating, a continuous cross sectional sampling of air from the duct shall flow through the smoke detector in the housing after which the air shall be returned to the duct. Detectors mounted in duct housings shall be rated for air velocities ranging from 300 to 4000 feet per minute.

3. Where the installation dictates that in-duct or pendant-mounting of the smoke sensor is required, provide the required sensor with electronics and accessories installed in accordance with the manufacturer's instructions. Where mounted directly in the air flow, detectors shall be rated for airflows ranging from 35 – 600 feet per minute.

4. Upon alarm actuation of the smoke detector **[a signal shall be sent to the ATC system via an associated control module to shut down the respective fan] [a supervised output incorporated into the duct smoke detector shall send a signal to an auxiliary power relay to initiate shutdown the respective fan]**.

5. Each detector shall obtain its' operating power from the fire alarm control unit serving the device.

6. Each detector shall include a remote alarm indicator (LED) with a key-operated test switch located in the nearest common corridor within proximity of the duct detector. The test station shall be clearly labeled to designate which detector it is associated with and the LED will illuminate when the detector is in alarm. Operation of the key switch will simulate detector activation and activate related fire safety functions.

C. Linear Beam Smoke Detectors

1. Beam type smoke detectors shall consist of infrared transmitter and receivers to detect smoke obscuration across large distances. The beam shall traverse the protected area and its' signal will be processed by the receiver to initiate the appropriate alarm response.

2. The detector shall cover distances from 30 to 325 feet and shall be designed, installed and adjusted to ensure there will be no interference from sunlight or high output lighting in the space.

3. Each beam detector set shall include transmitter, receiver, addressable monitor module and remote key-operated test station with LED alarm indicator and be powered from auxiliary 24VDC power from the local Fire Alarm Control Panel.

D. Heat Detectors

1. Heat detectors shall be analog/addressable sensors individually programmable for either fixed temperature, rate-of-rise or combined operation, except where otherwise dictated. The fixed temperature setting shall be field-selectable for 135 or 155 degree Fahrenheit operation, and the rate-of-rise operation shall be selectable for of 15 or 20 degrees/minute. Analog sensors will also provide a low temperature warning (Supervisory condition) when the ambient temperature in a protected area reaches 40 degrees F.

2. Where ambient conditions dictate, provide conventional fixed temperature, weatherproof or explosion-proof heat detectors in lieu of analog detectors. Conventional devices shall be individually addressable via a dedicated addressable monitor module which shall be installed in an appropriately heated, ventilated location.

3. Heat detectors shall be capable of operating a remote alarm indicator, auxiliary relay or an audible base. These devices shall be capable of being activated by the associated detector or any other detector as programmed at the control panel.

4. Heat detectors shall be provided for complete protection of the renovation during construction where sprinkler system is not functional. Heat detectors shall protect an area not to exceed 625 sq. ft. (25' x 25') and shall be added or subtracted throughout as construction dictates. Refer to Part 3 – Temporary Protection.

E. Carbon Monoxide Detectors

1. Carbon Monoxide Detectors: Provide sensors that include a CO sensing element where shown and required. Detectors shall be Listed to multiple ANSI/UL standards, including UL 2075 (carbon monoxide), UL 268 (smoke) and UL 521 (thermal) as applicable.

2. The CO element shall operate between 30-560 parts per million (ppm), with a standard set point of 70ppm for exposure of 60 minutes accordance with NFPA 720. CO Sensors shall operate on non-resettable 24vdc power provided by the FACP, and provide full analog values directly to the FACP. The detector shall have associated programmable control module outputs, and an integral piezo horn that produces 85dbA at 10ft. Activation of a CO Detector shall initiate a Priority 2 Supervisory CO Alarm event at the local Control Unit and Fire Response Center, and remote system Annunciators as described herein.

3. CO Sensors that are integrated into Mechanical Systems shall be designed for duct mounting or area detection, with a CO Alarm set point of not less than 50ppm, and be appropriately Listed by a Nationally-Recognized Testing Laboratory.

4. Sensors shall be provided and installed in accordance with the manufacturer's instructions. Sensors shall be monitored by the local Fire Alarm System for multiple alarm thresholds with corresponding addressable outputs to initiate equipment shutdown procedures and related life safety functions. Sensors will support periodic functional testing.

5. CO Sensors shall be monitored and programmed for Supervisory CO Alarm reporting in accordance with NFPA 720 and applicable code.

6. Provide System Sensor type CO1224T or equivalent with IAM type addressable monitor interface module.

F. Air Sampling Smoke Detector:

1. Provide an Air Sampling smoke Detection (ASD) system for each area shown in the Contract Documents. The system shall consist of a smoke sensor(s) with aspirating fans and a local operator's interface display, air sampling piping network, multi-stage filters, and fire alarm system interface modules as shown and required.

2. Where multiple air sampling smoke detection systems are provided, the system shall utilize closed-loop network communications between controllers and a high-level interface to the building Fire Alarm System. The interface shall allow discrete sensor interrogation and control through the main Fire Alarm Control Panel.

3. The air sampling detectors shall provide a nominal obscuration level range from .0015 to 6% /ft., adjustable through the system operator control interface.

4. The Fire Alarm System supplier representatives shall hold a current factory certification in the design and commissioning the ASD system. Provide the required coordination and acceptance testing in accordance

with applicable codes and the Contract Documents. Provide complete ASD system to include the following:

a. Smoke Detector Assembly: The smoke detector, filter, and aspirating fan shall, incorporate all time delay and remote reset functions. The ASD shall communicate with the FACP via direct SLC communications or addressable interface Monitor Modules.

b. The system will provide 3 field-selectable levels of alarm status: Alert Level 1 (.04% obscuration/ft.), pre-Alarm Level 2 (1% obscuration/ft.) and Alarm Level 3 (2.6% obscuration/ft). Actual sensitivity levels will be determined in the field and programmed during system commissioning. Alarm Levels 1 and 2 will initiate a Supervisory Condition on the Fire Alarm System, and Alarm Level 3 will initiate the building-wide evacuation sequence as described elsewhere in the Contract Documents.

5. Air Sampling Pipe Network: shall consist of a ¾ inch nominal inside diameter pipe arranged to provide optimal efficiency and air transport times which shall not exceed 60 seconds from the furthest point on the network. Sampling points shall be separated at intervals specified in NFPA72; not more than 30ft and typically in the range of 13 to 26 foot intervals along the path of the piping network. Air sampling system design documentation and calculations shall be developed using the most current version of aspiration modeling program ASPIRE2 or approved equal.

6. The ASD system shall be manufactured by Xtralis or approved equal. Provide the LaserFocus for single areas of protection up to 5000 sq. ft., LaserCompact for single areas up to 8,000 sq. feet, and LaserPlus or LaserScanner for areas up to 20,000 sq. ft. to provide four discrete zones of detection, each of which shall be selected in accordance with manufacturer's recommendations and project requirements.

G. Manual Pull Stations

1. Manual pull stations shall be addressable double action type devices. The device shall be red with the words "FIRE ALARM" in white, raised letters. The station shall mechanically latch upon operation and remain so until manually reset. Only authorized individuals will have the tools/keys to reset the device.

2. Were ambient conditions preclude the use of addressable devices, conventional pull stations shall be used, and a dedicated addressable module shall be installed in an appropriately heat and ventilated location.

H. Water Flow Switches

1. Water flow switches shall be provided by the Fire Protection Subcontractor. Furnish an addressable monitor module for each water flow switch shown on the drawings.

I. Supervisory Switches

1. Tamper or low pressure switches, or other supervisory signal initiating devices shall be provided by the Fire Protection Subcontractor. Furnish an addressable monitor module for each supervised device shown on the drawings.

2.13 ALARM NOTIFICATION APPLIANCES

A. Provide flush mounted combination or standalone Audible and Visual notification appliances as shown and permitted. All appliances shall be direct-wired; devices that utilize a multi-part assembly with swipe or non-mechanical pressure-type contact connections will not be considered acceptable.

B. Appliances shall have a red or white finish as directed by the Architect. The contractor shall provide surface mount backboxes and outdoor-rated appliances where site conditions dictate.

C. Visual Appliances

1. Furnish and install multi-candela, synchronized xenon strobes in compliance with NFPA 72 and rated per ANSI/UL 1971.

2. As a minimum, strobes shall support 15cd, 30cd, 75cd or 110cd settings, and shall clearly display the current setting of the device when installed. Candela settings shall be as directed by NFPA 72, based on final (installed) locations of each device.

3. Visual appliances in sleeping areas that are mounted 24” or less from the ceiling shall be rated as a 177cd appliance (minimum).

D. Audible Appliances

1. Audible Devices: Provide temporal Code 3 horns where shown or required. Each device shall have selective output settings and produce a sound output level of 84dbA at 10'.

2. Provide devices with the appropriate weatherproof listings in outdoor or wash-down areas.

3. Provide Explosion-proof Visual, Audible, and or combination Audible/Visual listed devices where indicated to be installed in High Hazard locations.

2.14 SYSTEM ACCESSORIES

A. Door Hold Open Devices: Door hold open devices shall operate from 24vdc power supplied by the local FACP. The Contractor shall coordinate the proper voltage of these devices with the door hardware supplier to ensure that all required hardware and wiring is provided.

B. Rotating Beacons: Furnish and install UL listed rotating beacons on the exterior of the building where shown. The unit shall have a red lens and a minimum effective intensity of 20 candela, and be installed on a weatherproof backbox with 1/2" NPT pipe mount with gasket for a complete weatherproof assembly. Provide Cooper Wheelock DC-MAX-R or equal.

C. Key Repository: Provide a metal key repository at the designated main Fire Department response location. Keys to the fire command center, elevators, electric and mechanical rooms and other keys required by the Storrs Fire Department shall be maintained within the repository. The repository shall have flush hinged door with lock and key approved by the City of Storrs Fire Department. Each key type shall have its own hook inside the repository and shall have a nameplate above the hook indicating the room or function which the key serves. Key repository box shall be Knox Box or approved equal with tamper switches for status supervision.

D. Remote Alarm Indicators: Provide remote alarm LED indicators for initiating devices located above ceilings or behind locked doors. Each indicator will illuminate when the detector is in alarm, will be located in the nearest common corridor, and be clearly labeled to identify device and room it is associated with. Where one or more devices are intended to activate one or more remote LED indicators, provide the necessary control module, auxiliary 24VDC power and device programming to accomplish this function.

E. Fire Alarm Terminal Cabinets: Terminal cabinets shall be provided in locations shown and as otherwise required to support wiring terminations, troubleshooting and future tenant fit-up. Cabinets shall be painted red and contain terminal blocks to support the system wiring where the Control Panels are remote from the devices served. Cabinets shall include accommodation for all wiring including SLCs, notification circuits, and related addressable and fault isolation modules for future expansion and modification.

2.15 ELEVATOR INTERFACE

A. Provide the monitor and control modules in each Elevator Control Room to accomplish the required Emergency Elevator Service functions. Functions shall include primary and alternate elevator recall, fire hat warning, smoke vent damper control and emergency shutdown of elevator power.

B. The Contractor shall fully coordinate all requirements with the Elevator Contractor.

C. Elevator functions shall be in accordance with ANSI A17.1 and NFPA 72 as follows:

1. Primary Recall: Initiate recall of effected elevator cabs to the primary recall level.

2. Alternate Recall: Initiate recall of effected elevator cabs to the alternate level where the alarm is initiated on the primary recall level.

3. Fire Hat Warning Indicator: Flashes in the event of alarm initiation by any device located in the associated control room or hoistway.

4. Hoistway Smoke Damper Control: Initiate opening of the smoke damper in the event of an alarm by detectors serving the particular hoistway.

5. Emergency Shutdown: Where elevator control rooms or hoist ways are protected by an automatic sprinkler system, the system shall be configured to shut down elevator power (following the appropriate time delay period) prior to sprinkler operation. Provide an appropriately rated heat detector within twenty-four inches of each sprinkler head to initiate the power disconnect. Control circuits shall be monitored for the presence of power; loss of voltage to the means of disconnect shall cause a supervisory condition.

6. Connections to elevator cab emergency telephone.

D. All Fire Alarm wiring shall be done by the Electrical Contractor and brought to a designated point for use by the Elevator Contractor. The Elevator Contractor shall install all wiring required within the elevators shafts, etc. and make final terminations to elevator controls.

E. Furnish to the Elevator Contractor firefighters emergency telephones - one (1) for each elevator. These components shall be installed by the Elevator Contractor. All wiring for systems shall be done by the Contractor and brought to a designated point as directed by the Elevator Contractor. The Elevator Contractor shall install all wiring required within the elevators shafts, etc.

2.16 TWO-WAY (AREA OF RESCUE ASSISTANCE) EMERGENCY COMMUNICATION SYSTEM

A. Provide a complete two-way communications system in accordance with IBC-2009 Section 1007.8. The system will provide hands-free internal communications between designated elevator lobbies and a Master Station currently located in the **[_____;]** final location to be approved by University of Connecticut Fire Department.

B. Outlet boxes, conduit, wiring, and all other equipment necessary to provide a complete and operating Area of Refuge Assistance system.

C. The communication system consists of remote Call Stations and a Master Station with battery back-up (24 hours of full operation & standby upon loss of power) and programmable automatic dialer and remotely located transformer and Master Station.

D. The communication system shall have a phone dialer connection to the University of Connecticut Fire Department and the number is (860) 486-6784.

E. Remote Call Intercom Station:

1. Flush mounted or Surface mounted

2. Vandal proof 16-guage 304 stainless steel construction with engraved lettering.

3. 3” diameter button:

a. Engraved with “PUSH FOR HELP” lettering backfilled in red.

b. Capable of being activated from any angle with a minimum of effort.

c. No other hardware shall protrude from the station as high as the pushbutton.

4. Red LED indicator confirms transmission of the “HELP REQUESTED” SIGNAL.

5. Piezoelectric alarm.

6. 3" Mylar 45 ohm speaker

7. Dual audio and visual alarms for the hearing and visually impaired.

F. Master Station Control Unit

1. Stainless Steel

2. Surface Mounted

3. Handset for Talk/ Listen

4. LED for each area

5. Talk & Hold buttons for each area

6. Power Led (red)

7. Battery Back-up w\ light

8. Green Led to indicate outgoing call initiated from any area station

9. Override button to cancel any outgoing call

10. Audio alert signaling for outgoing call from the area station

G. System wiring shall be in accordance with applicable Code and NFPA 70-20102. All interconnecting wiring shall provide Level 2 Survivability in accordance with NFPA 72-2002 requirements.

H. All cable shall be as recommended by the manufacturer or an approved equivalent.

1. Remote Call Station wiring to Master Station Control Unit shall be a 4 conductor overall shielded twisted pairs – 2 hour rated (MI) cable or equal.

2. Master Station Control Unit wiring shall include 2-wire analog telephone line and primary 120vac power.

I. Provide 24vdc system power via a UL-Listed power supply with dedicated standby batteries.

J. System Operation

1. When in use the system shall provide two-way audio communications between the remote Call Stations and the Master Station. Communication at the remote Call Station shall be hands-free after initial contact from the Master Station or called party, the Master Station will use an ADA compliant volume control handset.

2. When an emergency call is placed by the remote Call Station, it provides an indication that a call is being processed. After pressing the "PUSH FOR HELP" call button:

a. Provide audio and visual confirmation:

b. A "HELP REQUESTED" LED shall illuminate.

c. A 90 dB piezoelectric alarm shall sound.

3. The Master Station shall allow emergency personnel to check status of each area and to talk with each Call Station on an individual basis or all of them together as follows:

a. A lighted green LED labeled "**RESCUE SERVICES**" indicates that an emergency is in progress.

b. If an emergency call is in progress, lifting the handset on the Master Station will automatically join the conversation. At this point any or all Call Stations may be placed on hold by pushing the hold button corresponding to that unit, which will leave them talking to the called party. The call can be disconnected by pressing the "**DISCONNECT TO CALL SERVICES"** button, which will leave the Master Station in contact with the remote Call Station.

c. If there is no emergency call in progress you can call into any or all Call Stations by pressing the corresponding talk button to that unit.

d. By hanging up the Master Station you disconnect from the conversation while leaving the remote Call Station continuing any ongoing conversation with the called party.

K. Pre-approved manufacturer for the Two-Way Emergency Communications System.

1. GAI-TRONICS: Model #GAI-TRONICS, #HO2059

2.17 WIRING AND RACEWAYS

A. Wiring

1. Size and type of all system wiring shall be as recommended by the system manufacturer and documented on the system shop drawings. Provide a minimum of #18 AWG wiring.

2. Survivability: Provide two (2) hour fire rated conductors for all circuits that are designated to have Level 2 survivability or higher, and are not protected in their entirety by 2 hour construction.

3. Two hour protection shall be provided as follows:

a. All network data and audio wiring between fire alarm control units and terminal cabinets.

b. Wiring between the fire alarm control units and the remote annunciators.

c. Fire Alarm circuits traveling between fire zones.

d. All notification appliance circuits shall be protected from their point of origin until they enter the evacuation signaling zone they serve.

e. Device wiring to notification appliances from fire alarm control unit to the first device on the circuit (including the last device back to panel).

f. Control wiring to all stair pressurization systems and associated equipment.

g. Engine start circuit for each automatic transfer switch to the generator.

4. Provide physically separated outgoing and return loops for all Class A wiring in accordance with NFPA 72 recommendation and NEC guidelines.

5. For network and audio risers, provide a minimum of twelve inches of separation when the conduit is run vertically, and a four foot separation when the conduit is run horizontally.

B. Raceways

1. Raceways for all fire alarm wiring and peripheral equipment shall be Rigid Galvanized Steel, Intermediate Metal Conduit or Electrical Metallic Tubing (EMT), (minimum 3/4") subject to the restrictions of the National Electrical Code. Refer to Specification Section 260530 for additional information.

2. Field device wiring that is run in concealed spaces or located above ceilings may be permitted to be Metal-Clad (MC) Cables in lieu of conduit or EMT. Where permitted, all MC Cables shall be independently supported by building structure and be identified and labeled as required and stated herein.

C. 2-Hour Fire Rated Mineral Insulated (MI) Conductors

1. General

a. This section includes 2 hour fire rated type MI mineral-insulated metal-sheathed cable with multiple, twisted copper conductors within a seamless copper sheath, cable connectors and connections.

2. References

a. NFPA 72 – National Fire Alarm and Signaling Code

b. International Building Code (IBC) Section 909 - 2009

c. ANSI/NFPA 70 - National Electrical Code

d. FM 3D0Q9.AM 8/1997

e. UL Category FHIT – Classified Electrical Circuit Integrity System with a 2 hour fire rating, 12/2012.

3. Qualifications

a. Manufacturer shall be a company specializing in manufacturing products specified in this Section with minimum ten years documented experience.

b. Cable shall not off gas or propagate smoke.

4. Regulatory Requirements

a. Cable shall conform to requirements of ANSI/NFPA 70.

b. Furnish products listed and classified by Underwriters Laboratories, Inc. as suitable for purpose specified and shown.

5. Project Conditions

a. Verify that field measurements and conditions are as shown on Drawings.

b. Cable routing shown on Drawings is approximate. Route cable as required to meet project conditions.

c. Where cable routing is not shown, and destination only is indicated, determine exact routing and lengths required.

6. Coordination

a. Coordinate work specified in this section with work provided under other electrical work and the work of other trades.

b. Determine required separation between cable and other work.

c. Determine cable routing to avoid interference with other work.

7. Manufacturer

a. Pentair Thermal Management/Pyrotenax System 1850 2-hour fire rated.

8. Mineral-Insulated Metal-Sheathed Cable

a. Description: ANSI/NFPA 70, Type MI

b. Conductor: Copper

c. Insulation Voltage Rating: 300 volts.

d. Insulation Material: Magnesium oxide refractory mineral.

e. Metal-sheath Material: Seamless soft-drawn copper.

f. Fire Rating: Cable assembly, including factory splices and supports shall have a 2 hour fire rating as listed and classified by Underwriters Laboratories, Inc.

g. Overjacket:

1) If installed interior to the building: none required

2) If installed direct buried, PVC or manufactured extruded jacket.

h. Cable sheath shall be marked with conductor size, voltage and UL fire resistant classification number.

i. Each components of the cable assembly shall contain less than 300 ppm of lead, and shall meet the requirements of LEED for Healthcare MR Credit 4.2.

9. Wiring Connectors And Terminations

a. Cable Termination:

1) Pentair Thermal Management/Pyrotenax Model PyroPack – Multi-conductor (Installation PTM document #545E) and fire alarm twisted pair cables (PTM document #578E).

b. Cable Splice:

1) All cable splices of MI cable required due to length of conductor shall be factory installed and have 2 hour fire rating equivalent to the conductor itself. Field splices shall not be allowed unless installed within 2 hour fire rated rooms. Field splices within 2 hour fire rated rooms shall be Tyco Thermal Controls/Pyrotenax Model Installation Sheet 550.

10. Examination

a. Verify that cable end factory temporary seals have remained intact, that the insulation has not been exposed to air, and that no moisture has entered cable insulation.

b. Verify that work of other trades likely to damage cable has been completed.

11. Storage

a. Cables shall be shipped from the manufacturer with ends temporarily sealed against moisture ingress.

b. When cables are cut in the field, the end shall be sealed using standard sealing compound and PVC tape.

c. Cable shall be stored in a clean dry location.

12. Handling

a. Cable shall be uncoiled by rolling or rotating supply reel. Do not pull from coil periphery or center.

b. Take precautions necessary to prevent damage to cable from contact with sharp objects, including pulling over foreign material or sheaves.

13. Wiring Methods

a. Fire Rated Locations: Use only fire rated cable.

b. Use wiring methods indicated on Drawings and as specified herein.

2.18 SPARE PARTS

A. The fire alarm system shall be furnished with spare parts stored in an area approved by the Owner.

B. The following spare devices shall be supplied (minimum of one each):

1. Two (2) percent spare control modules (each type).

2. Two (2) percent spare monitor modules (each type).

3. Two (2) percent initiating devices – including device base and sensors as applicable (each type).

4. Two (2) percent notification appliances (each type).

PART 3 - EXECUTION

3.1 COOPERATION AND WORK PROGRESS

A. The Electrical work shall be carried on under the usual construction conditions, in conjunction with all other work at the site. The Contractor shall cooperate with the Architect, Construction Manager, and all other Subcontractors and equipment suppliers to coordinate the work and proceed in a manner so as not to delay the progress of the project.

B. The Contractor shall coordinate their work with other Trades so that work will be completed as soon as conditions permit; any interruptions of the building functions will be kept to a minimum. Any overtime hours worked or additional costs incurred due to lack of proper coordination with other Trades or the Owner by the Contractor shall be assumed by the Contractor without additional cost to the Owner.

C. The Contractor shall furnish information on all equipment provided under this Section but installed under another Section to the installing Contractor as specified herein.

D. The Contractor shall provide all materials, equipment and workmanship to ensure adequate protection of all electrical equipment during the course of construction of the project. This shall also include protection from moisture and all foreign matter. The Contractor shall also be responsible for damage which he causes to the work of other Trades, and he shall remedy such injury at his own expense.

E. Waste materials and equipment shall be removed promptly from the premises. All material and equipment stored on the premises shall be kept in a neat and orderly fashion and shall not be stored where exposed to the weather. The Contractor shall be responsible for the security, safekeeping and damages, including acts of vandalism, of all material and equipment stored at the job site.

F. The Contractor shall be responsible for unloading all electrical equipment and materials delivered to the site, including all large and heavy items that require hoisting. Consult with the Construction Manager for hoisting/crane requirements. During construction of the building, the Contractor shall provide additional protection against moisture, dust accumulation and physical damage of the main service and distribution equipment. This shall include furnishing and installing temporary heaters within these units, as approved, to evaporate excessive moisture and ventilate it from the room, as may be required.

G. The Contractor to coordinate the delivery of the electrical equipment to the project in advance of the time of installation but not too far in advance of installation to ensure that possible damage and deterioration of such equipment will not occur. Equipment stored for an excessively long period of time (as determined in the opinion of the Architect) on the project site prior to installation may be subject to rejection by the Architect.

H. The Contractor shall erect and maintain, at all times, necessary safeguards for the protection of life and property of the Owner, Workmen, Staff and the Public.

I. Prior to installation, the Contractor shall coordinate the exact mounting arrangement and location of electrical equipment to allow proper space requirements as indicated in the NEC. Particular attention shall be given in the field to group installations. If it is questionable that sufficient space, conflict with the work of other Subcontractors, architectural or structural obstructions will result in an arrangement which will prevent proper access, operation or maintenance of the indicated equipment, the Contractor shall immediately notify the Construction Manager and not proceed with this part of the Contract work until definite instructions have been given to him by the Architect.

3.2 INSTALLATION

A. General

1. Furnish and install the complete fire alarm system according to the drawings, specifications and all applicable Codes and Ordinances. In addition, the

installation shall be consistent with the manufacturer's recommendations and the reviewed shop drawings.

2. The Contractor shall furnish and install, in accordance with manufacturer's instructions, all wiring, conduit and outlet boxes required for the erection of a complete system as described herein and as indicated on the drawings.

3. Final connections between the control equipment and wiring system shall be made under direct supervision of a representative of the manufacturer.

4. The Contractor shall be responsible for the proper selection and placement of all devices to ensure compliance with the Contract Documents and applicable code.

5. Installation of equipment and devices that pertain to other work in the Contract shall be closely coordinated with the appropriate Contractors. The Contractor shall clean all dirt and debris from the inside and the outside of the fire alarm equipment after completion of the installation.

6. Unless specifically permitted by the Local Authority Having Jurisdiction, smoke detectors shall not be installed until after the construction cleanup of all trades is complete and final. If smoke detectors are installed for any reason during the construction period, it shall be the responsibility of the Contractor, at his cost, to clean and recalibrate, or replace each device in accordance with NFPA 72 - prior to final testing and the request for acceptance.

7. All miscellaneous hardware, back boxes and support accessories including support rods, nuts, bolts, screws and other such items, shall be furnished as required for proper installation of the system and shall be of a galvanized or cadmium plated finish, or of other approved rust-inhibiting coating.

8. The Contractor shall ensure that all concealed equipment that may require maintenance or access for any reason, are made easily accessible.

9. Each field device shall be distinctively labeled with its corresponding address number or point identifier and bar code in accordance with the Owner's requirements for device labeling and maintenance record-keeping.

B. Raceways

1. All fire alarm system wiring shall be run in conduit as specified herein and in section 260530, and meet the requirements of NEC Article 760 and all State and Local Electrical Codes. Conduit sizes shall be determined based on the system suppliers' shop drawings and be sized to support the quantities and types of wiring to be installed. Minimum ¾" conduit.

2. Field device wiring that is run in concealed spaces or located above ceilings may be permitted to be Metal-Clad (MC) Cables in lieu of conduit or EMT. Where permitted, all MC Cables shall be independently supported by building structure and be identified and labeled as required and stated herein.

3. All pull and junction boxes shall be painted red and labeled "Fire Alarm". Conduits and metallic raceways for fire alarm system wiring shall be red or be identified by a red stripe. Wiring color code and tagging shall be maintained throughout the installation. Fire alarm cable in raceways shall be tagged every 20'-0" and be clearly labeled "Fire Alarm".

C. Wiring

1. Wiring types and sizes shall be as recommended by the equipment manufacturer. Minimum #18 AWG.

2. All wiring shall be UL listed for fire protective signaling systems and meet the requirements of NEC Article 760.

3. Color code shall be used throughout. All wires shall be tagged at all junction points and shall test free from grounds or crosses between the conductors.

4. Wiring shall be routed to maintain sufficient distance between the feed and return loop as required by the Authority Having Jurisdiction and as specified herein.

5. Maximum wiring distances shall be within manufacturer's specifications and as directed on the reviewed shop drawings.

6. Circuit quantities, sizes and loading shall be as shown and documented in the supplier's shop drawings, with actual final conditions recorded in the as-built documents.

D. Mineral Insulated (MI) Metal-Sheathed Cable

1. Install products in accordance with manufacturer's instructions.

2. Bending:

a. Not less than five (5) times the cable diameter for cable not more than ¾ inch.

3. Pulling:

a. For all cables up to and including ½" diameter, use ten inch (250mm) or larger sheaves.

4. Splicing:

a. All fire rated splices shall be made in the factory.

b. In the event a field splice is necessary, it must be made within a 2 hour fire rated room, approved by the engineer and:

1) Made in the field by manufacturer's field technician, or

2) Made in the field by personnel trained by the cable manufacturer using manufacturer's components.

5. Terminations:

a. Field made terminations shall be made with cable manufacturer's termination kits only. Stripping tools, crimping and compression tools available from the manufacturer shall be used for proper cable termination.

b. Terminations must be completed immediately once started to avoid moisture ingress from surrounding air. Prior to completing each termination, test insulation resistance and follow manufacturer's drying procedures until insulation resistance reaches an acceptable level.

6. Exposed or Surface installations:

a. Cable may be secured directly to fire rated building structure using an approved method such as one, or any combination, of the following:

1) Straps: ½ inch (13mm) wide x 3 1/2 inch (38mm) long by 0.030 (0.75mm) thick stainless steel or copper straps. Each strap shall contain two ¼ inch (6mm) holes for securing with 3/16 inch (5mm) by minimum 1 3/4 inch (44mm) long steel anchors.

2) Steel struts and cable tray: Use only the steel strut framing system and support recommended by Pyrotenax. Aluminum or other materials are not acceptable.

b. Supports shall not exceed three (3) feet on center horizontally, or six (6) feet vertically.

c. Cables shall be installed perpendicular and parallel to building lines.

7. Embedded Installations:

a. Protect against damage during pulling, and during concrete pouring or backfill and tamping.

b. Where cables emerge from grade, provide PVC conduit, metal plate or angle iron. This protection shall minimally extend from 18 inches (460mm) below grade to 8 ft. (2.5m) above grade.

c. Provide overall extruded polymer jacket over exposed copper cable sheath when embedded in corrosive environments.

8. Wall or floor penetrations:

a. Provide sleeve to protect cable and penetration opening during pulling.

b. Provide approved fire stopping of all penetrations.

9. Neatly train and lace cable inside boxes, equipment, and panelboards.

10. Field Quality Control

    a. Inspect cable for physical damage and proper connection.

    b. Measure tightness of bolted connections and compare torque measurements with manufacturer's recommended values.

    c. Verify continuity of each conductor.

    d. Prior to energizing cables, measure insulation resistance of each cable. Tabulate and submit for approval.

    e. Provide certification from cable manufacturer that installation is in accordance with their requirements.

3.3 ADDITIONAL DEVICE INSTALLATION REQUIREMENTS

A. The Contractor shall carry within his bid the cost of materials and labor required for installing additional devices which may be required by the Fire Department during final inspection. This shall be carried as a separate line item and unit cost associated for each item as indicated in Equipment Allowances section of this specification.

B. The cost shall include the following additional devices:

1. Ten percent spare control modules (each type), including conduit and wire with an average length of 20'-0".

2. Ten percent spare monitor modules (each type)[, including conduit and wire with an average length of 20'-0"].

3. Ten percent initiating devices – including device base and sensors as applicable (each type), including conduit and wire with an average length of 20'-0".

4. Ten percent notification appliances (each type), including conduit and wire with an average length of 20'-0".

3.4 MATERIALS AND WORKMANSHIP

A. All materials and equipment shall be new and unused and meet requirements of the latest NFPA, UL, NEMA, ANSI and IEEE Standards. Equipment shall be as required or recommended by applicable OSHA and NFPA standards and be UL listed, FM approved and labeled accordingly.

B. Despite references in the specifications or on the drawings to materials or pieces of equipment by name, make or catalog number, such references shall be interpreted as establishing standards of quality for materials and performance.

C. Finish of materials, components and equipment shall not be less than Industry good practice. When material or equipment is visible or subject to corrosive or atmospheric conditions, the finish shall be as approved by the Architect.

D. Provide proper access to material or equipment that requires inspection, replacement, repair or service. If proper access cannot be provided, confer with the Architect as to the best method of approach to minimize effects of reduced access.

E. All work shall be installed in a neat and workmanlike manner and shall be executed in accordance with all Local and State Codes, the approved shop drawings and the manufacturer's instructions.

F. The Owner will not be responsible for material, equipment or the installation of same before testing and acceptance.

3.5 COORDINATION OF SYSTEM MAINTENANCE AND SUPERVISION

A. It shall be the Contractor's responsibility to arrange for meetings between the Owner's representatives and representatives of the testing company that will be responsible for the maintenance, testing and supervision of the completed fire alarm system.

B. Provide complete as-built Record Documents as stated herein and required by the applicable Code and NFPA 72. The foregoing materials shall be submitted to the Engineer for approval and provided to the Owner's Representative at project closeout.

C. Provide a copy of the Supervising Station Service monitoring agreement as required herein.

3.6 FIELD ACCEPTANCE TESTS

A. The Owner shall not be responsible for fire alarm system material or equipment prior to final testing and acceptance.

B. An authorized technical representative of the Original Equipment Manufacturer will participate during the system testing and assure that the system is complete and fully operational.

C. Where equipment or systems provided under this Contract are found to be defective or not in accordance with the submitted shop drawings, manufacturer's published data, or the Contract Documents, it shall be the responsibility of the Contractor to correct all discrepancies.

D. Before final approval and acceptance by Building Owner, the fire protection and life safety systems shall be subjected to complete 100% test to include integrated testing of related systems as specified in all applicable NFPA Codes and Standards.

E. Tests shall be conducted by a UL-certified (category UUJS) Testing company and witnessed by the Record Engineer, Fire Department Representatives, local Building Official, and Owner's Representatives. The testing agent shall work in cooperation with the Installing Contractor and system supplier to complete all test records, including

the phased completion of the NFPA Record of Completion at designated times throughout installation.

F. Piping, wiring and accessory devices in any portion of new system shall not be covered up or concealed permanently until they have been tested and approved. At least 48 hours notice shall be given to aforementioned representatives before test.

G. The Contractor shall demonstrate that all systems perform as required by the Contract Drawings and specifications. Any subsequent testing shall be performed in accordance with the Owner's requirements, at a time which is acceptable to the Owner. All costs for system re-testing, which is required due to incomplete work or installation deficiencies shall be borne by the Contractor. Costs shall include reimbursement of expenses incurred by the Record Engineers to witness such testing. The Contractor shall notify the Owner and Engineer (7) days in advance of the date when the system will be ready for retesting.

H. Test shall include activation and verification of the operation of each and every device, including their associated functions. No exceptions to this requirement will be accepted. A written test log of this complete test shall be submitted prior to acceptance of the system by the Owner.

I. Test shall meet requirements of the following:

1. NFPA 72-2010 including, but not limited to the requirements for local protected premises systems and Supervisory Service.

2. NFPA 72-2010 Chapter 10 – Fundamentals and Documentation.

3. NFPA 72-2010 Chapter 14 – Inspection, Testing and Maintenance.

4. NFPA 72-2010 Chapter 27 – Public Fire Alarm Reporting Systems.

5. Coordinated testing between related systems tested in accordance with their corresponding NFPA standards including, but not limited to NFPA 13, 20, 25, 70, 90A and NFPA 110.

J. To assure that wire size, power supply, circuit loading, etc. are suitable to support 100 percent of devices being in alarm or operated simultaneously, this test shall include the following:

1. Place each sensor and monitor module into alarm. Activation of each device shall display the correct device address, condition and assigned message text.

2. Confirm that all control modules respond to their programmed events and result in all required actions.

3. Measure the actual voltage drop at the end of each Notification Appliance Circuit.

4. Reset all alarmed and operated devices. The panel shall display the address of any off-normal devices.

5. Test each sensor for alarm by using a smoke entry test. Devices designated for alarm verification shall be tested and confirmed to initiate the appropriate verification sequence, including verification time period, grouping and sequencing.

6. Test each sensor for trouble by removing the sensor from its base. The address and trouble condition for each shall be displayed. Insert a different type of sensor into the base. The address and trouble condition shall be displayed. The sensor will return to normal only when the proper sensor type is reinserted in the base.

7. Sound Performance Testing:

   a. Upon installation, each speaker shall be set at the power setting recommended by the system supplier shown in the shop drawings.

   b. During system pre-testing, audible sound levels shall be measured and recorded in all occupied spaces with the evacuation signal sounding. Following the initial measurement, the Contractor shall adjust and document each device setting to achieve optimal system performance and produce 15dbA above ambient to produce sound levels in accordance with NFPA 72 requirements.

   c. Following the initial measurement, the Contractor shall make the necessary adjustments to the system in order to achieve the desired performance, and document the system performance characteristics.

   d. The system will be required to produce an alarm signal sound pressure level of 75dbA or 15dbA above ambient; whichever is greater.

   e. The Contractor shall include all costs associated with having a UL-certified testing agency perform sound pressure level measurements throughout the building as described above. Test results shall be certified by the testing agency, recorded in a fashion as shown below, and be included with the Certificate of Completion and Final Test Reports and documented on the as-built drawings.

   f. Measurements shall be recorded for each space to certify that the sound level requirements comply with these requirements in the following format:

"Room/Area"	"Ambient Sound Level dbA"	" Evacuation Tone Sound Level dbA"

8. Provide a final test report and Record of Completion indicating proper functioning of the system and conformance to the specifications. The test and Certificate of Completion shall be performed by factory-trained qualified

technicians. Each and every device shall be tested, and standalone operation of remote panels shall be verified.

9. The final testing, certification and documentation shall be performed by the same company that shall hold and execute the Test and Inspection contract.

10. The Contractor shall provide the final test reports, Record of Completion and As-Built Documents with the request for Final Fire Department Acceptance.

3.7 MANUFACTURER'S CERTIFICATION

A. The qualified, factory trained OEM representative shall provide on-site supervision of the fire alarm system installation. The representative shall certify, in writing, that the system and equipment has been installed, adjusted, and tested in accordance with the manufacturer's recommendations.

B. The Contractor shall provide three (3) copies of the manufacturer's representative's certification before final payment is made.

3.8 TRAINING

A. A total of 6 two-hour training sessions shall be presented by factory-trained and certified manufacturer’s representatives that are thoroughly knowledgeable of the specific installation.

B. Training will be developed specifically for Owner’s designated personnel including system operators, facility engineering and maintenance staff, and representatives of the University of Connecticut Fire Department, including Fire Prevention Officers and other personnel designated by the District Chief.

C. Session topics shall include:

1. System Overview – shall be a high-level overview of the system architecture, components and system operation, and be presented to all attendees.

2. System Operation – shall be a detailed review of the system features and function to be provided and specified herein. These topics will be presented to all supervising staff, engineering personnel and Emergency Responders.

3. System Maintenance and Troubleshooting – A review of system diagnostic features and functions, and troubleshooting procedures will be presented to engineering staff and emergency responders.

D. Training sessions will be scheduled at the Owner’s convenience, and be limited to no more than two sessions on a given day. Sessions will be held at different times in order to accommodate trainees that are scheduled outside normal business hours.

3.9 **Fire Alarm Inspection and Testing Contract, and Monitoring Agreement - [Warranty] [By Owner]**

A. Before making final connections to the Campus Supervising Station, a Warranty Maintenance Contract must be in evidence. The Contract shall be in effect between the Owner and a UL-certified testing company qualified to conduct warranty service on the installed service. The contract shall provide for periodic testing and emergency service response on a 24 hour on call basis with a 4 hour response time.

B. The Contractor shall furnish a one-year Central Station Supervising Station Monitoring agreement, to support Contact ID event reporting of all system events to an approved Supervising Station.

C. Testing shall be conducted and documented in accordance with NFPA requirements and manufacturer's instructions for all equipment and devices. Submit hard and electronic copies of test reports directly to the Owner following each test.

D. As a minimum, the system shall be subject to at least one complete test annually. Tests may be conducted on a quarterly basis, with twenty-five percent of the total number of devices being tested each quarter, subject to the Owner's acceptance. The test contractor shall coordinate testing with related trades, including Fire Protection, Elevator and HVAC Systems.

E. Self-restoring detectors shall be exposed either to heat or smoke to test ability to initiate alarm.

F. Quarterly test reports shall be maintained in accordance with the referenced standards and include the following information:

1. Date of test.

2. Name and location being tested.

3. Visual inspection and functional tests of system components and applicable manual and automatic initiating devices.

4. Functional test of required system operations, including manual system functions, automatic sequences, and fire safety functions.

5. Number of initiating devices tested with their corresponding device type, address or zone reference number.

6. Number of notification circuits tested with their corresponding circuit types and reference numbers.

7. Printout of a complete peak-value log and device sensitivity report.

8. Condition of primary and secondary (standby) power supplies.

9. Name of company conducting test.

10. Name and signature of person conducting test.

G. Agreement shall not cover:

1. Damage resulting from accidents, fire, storm, water, negligence, misuse, vandalism, nor defective or improper wiring.

2. Testing of water flow switches or Fire Pump (to be tested by the Fire Protection System Contractor).

3. The costs associated with integrated testing of related systems.

4. Testing or repairs of door release mechanisms covered in another section of hardware contract.

5. Testing or repairs of dampers, smoke hatches, elevator controls, and other peripheral equipment not provided by fire alarm supplier.

H. The testing company shall be responsible for coordination between the testing of related systems and equipment, including Elevator Service, water flow, tamper, damper and fan controls, etc., to ensure that all are tested in a comprehensive manner at the same time.

END OF SECTION

SECTION 310913 VIBRATION AND SOUND MONITORING

PART 1 GENERAL

1.1 SUMMARY

A. The purpose of the vibration and sound monitoring program is to:

1. Provide supplemental pre-construction baseline data.

2. Provide vibration and sound data during construction activities for comparison with specified limiting values to permit mitigating measures as needed to prevent damage to buildings and underground utilities and adverse impacts to operations in surrounding buildings.

1.2 GENERAL PROVISIONS

A. Attention is directed to the CONTRACT AND GENERAL CONDITIONS and all Sections within DIVISION 01 - GENERAL REQUIREMENTS which are hereby made a part of this Section of the Specifications.

B. Examine all Drawings and all other Sections of the Specifications for requirements therein affecting the work of this Section.

C. Coordinate work with that of all other trades affecting or affected by work of this Section. Cooperate with such trades to assure the steady progress of all work under the Contract.

1.3 REFERENCES

A. Vibration and Sound Monitoring Summary Report, Proposed Engineering and Science Building, University of Connecticut, Storrs, Connecticut, dated 11 March 2014.

B. United States Bureau of Mines (USBM) Report RI-8507, “Structural Response and Damage Produced by Ground Vibrations from Surface Mine Blasting”, dated 1980, and USBM Report RI-8896, “Effects of Repeated Blasting on a Wood Framed House”, dated 1984.

1.4 RELATED SECTIONS

A. Section 013300 – Submittal Procedures

B. Section 014300 – Quality Assurance

C. Section 017000 – Execution and Closeout Requirements

D. Section 312000 – Earth Moving

E. Section 312400 – Building Earthwork

1.5 SECTION INCLUDES

A. Furnishing, installing, maintaining, monitoring, reporting results, and removing the vibration and sound monitoring equipment specified herein, and protecting instrumentation from damage.

B. The Work is to include, but is not limited to:

1. Providing access for the University Representative to all monitoring equipment.

2. Performing vibration monitoring continuously during the duration of the Work, including during non-work hours, at eight locations. Seismographs will be located as directed by the University Representative within adjacent buildings or at exterior locations.

3. Performing sound monitoring continuously during the duration of the Work, including during non-work hours, at six locations. Sound monitors will be located as directed by the University Representative within adjacent buildings or at exterior locations.

4. In the event of damage to monitoring equipment, immediately make all repairs and replacements necessary at no additional cost to the University.

5. Submitting written reports summarizing installation details and maintenance to the University Representative.

6. Collecting, reducing, processing, and reporting data from instruments to the University Representative.

7. Comparing monitoring results to action levels set in this Section, and if action levels are exceeded, immediately reporting the occurrence to the University Representative and stopping work until the situation is corrected. Implementing mitigating measures based on interpretations of monitoring data.

8. Performing a Simulated Construction Activity Test Program prior to beginning the Work.

9. Providing seismographs to monitor vibrations and sound during demolition, building construction, or other vibration-causing activities including the Simulated Construction Activity Test Program.

10. Obtaining all required permits and comply with applicable laws and regulations.

C. The Contractor's instrumentation personnel shall include a qualified Geotechnical Instrumentation Engineer (GIE) who is a registered Professional Engineer in the State of Connecticut, has a minimum of a Bachelor of Science degree in civil engineering, and has at least four years of direct field experience in installing and monitoring the types of instruments specified herein. The GIE shall:

1. Prepare detailed procedures for installing, calibrating, monitoring, data processing, and interpreting all instruments specified herein.

2. Review and sign all submittals.

3. Provide consultation to the Contractor as needed.

4. Supervise preparation of all technical submittals.

D. Implement mitigating measures as needed to maintain vibration and sound levels within limits specified herein.

E. The purpose of the Simulated Construction Activity Test Program is to:

1. Evaluate vibration and sound levels generated during activities representative of proposed means and methods for the work prior to the start of full-scale work.

2. Assist with identifying the need for modification to Contractor means and methods or implementation of mitigating measures to maintain vibration and sound levels below specified limits.

1.6 SUBMITTALS

A. The Contractor shall submit the following in accordance with Section 013300 – Submittal Procedures:

1. Product information indicating the manufacturer's specifications, calibration certificates, and installation procedures for monitoring equipment.

2. Name and relevant project experience list for the GIE.

3. Example report formats. After the format has been reviewed by the University Representative, the Contractor shall use that format for the duration of the monitoring program unless otherwise directed.

4. Weekly monitoring summary reports.

5. Automated e-mail alerts when specified limiting vibration or sound values are exceeded.

6. Instrument location plan showing actual monitoring equipment locations relative to the project site.

7. All data collected as a result of and as specified in Part 3.3 – Data Collection and Part 3.5 - Data Reporting of this Section.

8. Details of methods, procedures, and equipment (including make, model, technical specifications, and energy imparted if impact equipment) proposed for work of this Contract.

9. Details regarding activities and monitoring planned for the Simulated Construction Activity Test Program.

PART 2 - PRODUCTS

2.1 GENERAL

A. Whenever any product is specified by brand name and model number, such specifications shall be deemed to be used for the purpose of establishing a standard of quality and facilitating the description of the product desired. The term "acceptable equivalent" shall be understood to indicate that the "acceptable equivalent" product is the same or better than the product named in the Specifications in function, performance, reliability, quality, and general configuration. This procedure is not to be construed as eliminating from competition other suitable products of equal quality by other manufacturers. The Contractor may, in such cases, submit complete comparative data to the University Representative for consideration of another product. Substitute products shall not be ordered, delivered to the site, or used in the Work unless accepted by the University Representative in writing.

B. Any request from the Contractor for consideration of a substitution shall clearly state the nature of the deviation from the product specified.

C. The Contractor shall furnish all installation tools, materials and miscellaneous monitoring equipment components.

D. The Contractor shall repair all damages associated with the installation of all instrumentation.

2.2 EQUIPMENT

A. Seismographs:

1. Provide Blastmate III, Minimate Plus, or Minimate Pro4 seismographs as manufactured by Instantel Inc., Kanata (Ottawa), Ontario, Canada or acceptable equivalent. Seismographs shall be capable of recording seismic events in histogram combo mode of operation (collects particle velocity vs. time and records individual wave forms above a pre-determined trigger level). Recorded vibration data shall consist of peak particle velocity and frequency for longitudinal, transverse, and vertical directions. The seismographs shall have the following minimum features:

a. Seismic range: 0.005 to 1.25 in. per second (in/s) with an accuracy of +/- 5 percent of the measured peak particle velocity at frequencies between 4 and 125 Hz, and with resolution of 0.001 in/s or less.

b. Frequency range: 2 to 200 Hz.

c. Sample rate: 2048 S/s or greater.

d. Three component sensor.

e. Ability to transmit data remotely and forward alerts via e-mail when pre-determined vibration levels are exceeded.

f. Two power sources: Internal rechargeable battery and charger and 115 volts AC. Battery must be capable of supplying power to monitor vibrations continuously for up to 24 hours.

g. Capable of internal dynamic calibration.

2. A factory calibration shall be conducted on all seismographs at the manufacturer's facility prior to shipment. Each factory calibration shall include a calibration curve with data points clearly indicated, and a tabulation of the data. Each instrument shall be marked with a unique identification number.

B. Sound Monitors:

1. Provide Minimate Pro4, manufactured by Instantel, Inc., or acceptable equivalent. Equipment shall meet the requirements of IEC Class 1, be capable of recording sound as a time history and wave form, and L_{max}, L_{10}, and L_{eq}.

2. Each sound monitor shall have the following features:

a. Monitor by A-weight fast response.

b. Range: 30 to 140 dB(A) and with resolution of 0.05 dB(A) or less.

c. Frequency range: up to 20kHz.

d. Sample rate: 1024 S/s or greater.

e. Ability to transmit data remotely and forward alerts via e-mail when predetermined sound levels are exceeded.

PART 3 - EXECUTION

3.1 GENERAL

A. The Contractor shall install, maintain, and read equipment following the guidelines included in the manufacturers' instruction manuals, as detailed in the reviewed Submittal, and as specified herein. The Contractor shall perform monitoring of instrumentation. Provide access for the University Representative to all instrumentation.

B. The Contractor shall notify the University Representative at least 48 hours prior to installing each instrument, and shall coordinate installation with the University Representative.

3.2 INSTALLATION

A. The Contractor shall set up seismographs and sound monitors where directed by the University Representative to monitor vibration and sound levels at facilities that may be affected by demolition or construction activities.

3.3 DATA COLLECTION

A. Collection of data from the instrumentation shall be the responsibility of the Contractor. The Contractor shall provide and facilitate safe access to the Work for the University Representative to observe the collection of data from the instrumentation.

B. Reports transmitting vibration and sound monitoring data shall include at least the following:

1. Project name

2. Instrument type

3. Instrument number

4. Monitoring data

5. Construction activities within 300 ft of the instrument during the monitoring period

6. Remarks

3.4 LIMITING VALUES

A. Limiting Values for vibration and sound monitoring are as follow:

Instrumentation	Instrument Criteria
Type / Location	LIMITING
1. Vibration Monitoring at Adjacent Buildings and Structures (exterior)	See Attachment 31 09 13-A
2. Vibration Monitoring at NMRs, lasers, and microscopes.	0.01 in./sec.
3. Vibration Monitoring in Vivarium	0.005 in./sec.
4. Sound Monitoring at Vivarium and Pharmacy Building	L_{max} = 70 dB(A) L_{10} = 65 dB(A)
5. Sound Monitoring (except at Vivarium and Pharmacy Building)	L_{max} = 80 dB(A)

B. If a Performance Criteria Limiting Value is being approached, the Contractor shall take all actions necessary to prevent exceedances of the Limiting Value, including but not limited to the following:

1. Meet with the University and University Representative within 2 hours to discuss exceedances and additional mitigation measures needed to prevent further exceedance.

2. If determined necessary by the University Representative, and approved by the University, immediately implement additional mitigating measures agreed to by the University

Representative and the Contractor to prevent further exceedances, including but not limited to:

a. terminate further work activity determined to be causing the exceedances.

b. implement alternate means of performing activities that will allow work to be completed without exceedances.

3. If exceedances continue, and if so directed by the University Representative, implement other measures determined necessary by the University Representative to halt the exceedances.

4. Install additional instrumentation and increase monitoring frequency if directed by the University Representative, at no additional cost to University.

C. Mitigating measures are subject to adjustment by the University Representative based on observed conditions during construction.

3.5 DATA REPORTING

A. Seismographs – Plots of data shall be the following types: strip charts and full waveform plots.

1. For seismograph data collected in continuous monitoring (strip chart) mode, provide a permanent record of single-component peak particle velocity. The strip chart shall also indicate the time and magnitude of maximum single-component peak particle velocity measured during each 1-hour interval of the monitoring period.

2. For seismograph full waveform data, provide plots consisting of a graphical display of the three component particle velocities and overpressure levels during the entire course of the vibration-producing construction activity.

B. Sound Monitors - Plots of data shall be the following type: Time history of L_{max} and L_{10}. Provide a time history of recorded sound levels during the monitoring period indicating both L_{max} and L_{10} over the monitoring period.

C. Each week the Contractor shall submit to the University Representative a description of the work performed during that week, noting activities responsible for measured vibration and sound levels, including:

1. A summary of construction activities. This summary shall include a general description of the nature and location of work during the week.

2. A description of any unusual events which may have affected the instrumentation readings. This report shall include a description of any remedial or precautionary measures that were implemented during the week in response to vibration and sound monitoring data, including when they were implemented and for what reason. The report shall also include a description of any future remedial or precautionary measures that are planned in response to existing vibration and sound monitoring or other data.

3.6 REMOVING INSTRUMENTATION

A. At completion of project, the Contractor shall remove instrumentation and restore areas to preconstruction conditions.

3.7 SIMULATED CONSTRUCTION ACTIVITY TEST PROGRAM

A. The Simulated Construction Activity Test Program shall be performed prior to full-scale activities and shall consist of the following:

1. Operation of proposed equipment to perform anticipated work as needed to permit evaluation of resulting vibrations and sound at surrounding buildings. Activities during the test program shall be representative of the Contractor's proposed means and methods and may include, but not be limited to:

   a. Rock excavation.

   b. Excavating and loading materials in trucks.

   c. Driving equipment and loaded dump trucks on proposed haul roads.

   d. Compacting backfill.

2. Monitoring vibrations and sounds during the test program in accordance with the requirements of this Section and providing results to the University Representative immediately after each activity to permit evaluation of results and planning of additional test program activities.

3. Developing and assessing alternate means and methods for the Work or implementing mitigating measures with further test program activities if recorded vibration or sound levels exceed limits specified herein. Modifications to means and methods or implementation of mitigating measures shall be at no additional cost to the University.

B. Coordinate work with the University Representative.

C. The duration of the test program shall be assumed to be a minimum of one, 8-hour day during normal working hours. Additional testing shall be performed at no additional cost to the University as needed to develop means and methods for performing work in a manner that satisfies the requirements herein.

PART 4 MEASUREMENT AND PAYMENT

4.1 GENERAL

A. Vibration and sound monitoring will not be measured, but will be paid for as part of the Base Contract Price and shall include furnishing all material, mobilization, labor, equipment, tools, and incidentals necessary to complete the work.

B. Mitigating measures will not be measured, but will be paid for as part of the Base Contract Price and shall include furnishing all material, mobilization, labor, equipment, tools, and incidentals necessary to complete the work.

END OF SECTION 31 09 13

Attachments:

Attachment 31 09 13-A – Limiting Vibration Levels

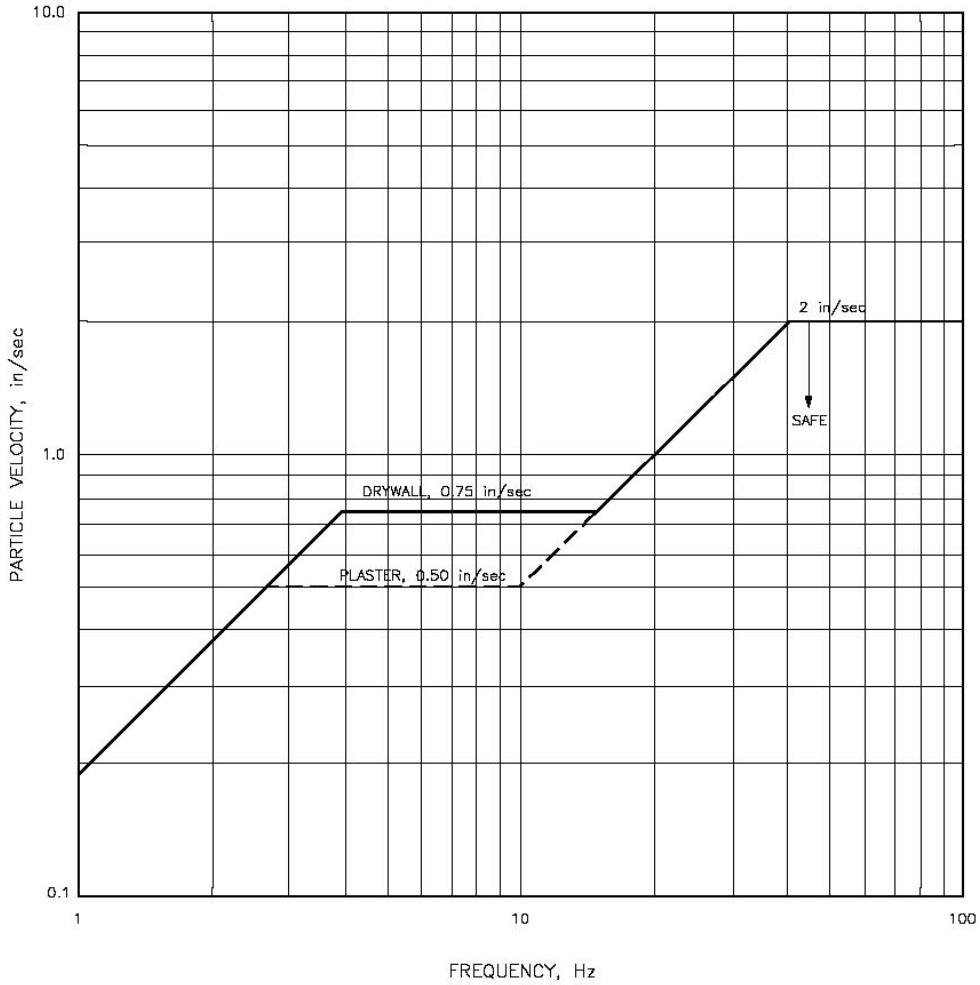

REFERENCE:
BUREAU OF MINES REPORT OF INVESTIGATION 8507, "STRUCTURE RESPONSE AND DAMAGE PRODUCED BY GROUND VIBRATION FROM SURFACE MINING BLASTING", 1980.

HALEY & ALDRICH

UNDERGROUND ENGINEERING & ENVIRONMENTAL SOLUTIONS

SAFE LEVELS OF BLASTING VIBRATIONS

NOT TO SCALE

PART 1 – GENERAL

1.01 DESCRIPTION

A. Work Included: Excavating, filling and grading, complete and accepted, as shown on the Drawings and as specified.

B. Related Sections:

1. Section 31 23 33 – Trenching and Backfilling;

2. Section 31 25 00 – Excavated Soil and Materials Management;

3. Section 31 25 13 – Erosion and Sedimentation Controls.

1.02 JOB CONDITIONS

A. Dust Control:

1. Use all means necessary to control dust on and near the Work and on and near all off-site borrow areas if such dust is caused by the Contractor's operations during performance of the Work or if resulting from the condition in which the Contractor leaves the site.

2. Thoroughly moisten all surfaces as required to prevent dust being a nuisance to the public, neighbors, and concurrent performance of other work on the site.

B. Protection:

1. Use all means necessary to protect all materials of this Section before, during, and after installation and to protect all objects designated to remain.

2. In the event of damage, immediately make all repairs and replacements necessary at no additional cost to the Owner.

1.03 REFERENCES

A. Wherever reference is made to the DOT Specifications, it shall mean the Connecticut Department of Transportation Standard Specifications for Roads, Bridges and Incidental Construction Form 816 (2004) as modified by Supplemental Specifications issued by the Connecticut Department of Transportation.

PART 2 – PRODUCTS

2.01 FILL MATERIALS

A. Granular Fill; Structural Fill: Article M.02.01, DOT Specifications.

B. Suitable Fill; Non-structural Fill:

1. Wherever reference is made on the Drawings or in the Specifications to suitable material, suitable backfill material, and suitable fill material, the material shall be mineral soil substantially free from organic materials, topsoil, wood, trash, and other objectionable materials which may be compressible or which cannot be properly compacted. It shall not contain rocks or lumps larger than six (6) inches in largest dimension and not more than 15 percent of the rocks or lumps shall be larger than 2 1/2 inches in largest dimension. Further, it shall not contain granite blocks, broken concrete, masonry rubble, or other similar materials. It shall have physical properties such that it can be readily spread and compacted during filling. Snow, ice, and frozen soil will not be permitted.

2. Do not import suitable fill or backfill material before all suitable, on-site, excavated material has been used.

3. This material shall not be used at locations where use of granular fill is indicated.

2.02 TRENCH BEDDING AND COVER MATERIALS

A. For Site Drainage Work: Section 33 40 00 – Storm Drainage Utilities;

B. For Sanitary Sewers: Section 33 30 00 – Sanitary Sewerage Utilities;

C. For Water Systems: Section 33 10 00 – Water Utilities.

2.03 SUBBASE AND BASE MATERIALS

A. Subbase materials, where required, and base materials:

1. For bituminous concrete: Section 32 12 16 – Asphalt Paving;

2. For concrete sidewalks: Section 32 13 13 – Concrete Paving.

PART 3 – EXECUTION

3.01 GENERAL

A. Familiarization: Prior to all work of this Section, become thoroughly familiar with the site, the site conditions, and all portions of the Work falling within this Section.

B. Acceptance of Excavations: When excavations are complete, request the Owner to inspect and do not proceed with further work until the Owner has indicated its acceptance.

C. Backfilling Prior to Acceptance of Work Installed:

1. Do not allow or cause any of the work performed or installed to be covered up or enclosed by work of this Section prior to all required inspections, tests, and acceptances.

2. Should any of the work be so enclosed or covered up before it has been accepted, uncover all such work at no additional cost to the Owner.

3. After the work has been completely tested, inspected, and accepted, make all repairs and replacements necessary to restore the work to the condition in which it was found at the time of uncovering, all at no additional cost to the Owner.

D. Disposal of Material: All excess material, both suitable and unsuitable, resulting from excavating, filling, and grading operations shall become the property of the Contractor. He shall be responsible for removal and disposal of the excess material off the site. The manner of disposal shall comply with all local, state, and federal regulations.

3.02 FINISH ELEVATIONS AND LINES

A. For setting and establishing finish elevations and lines, secure the services of a Registered Professional Engineer or Land Surveyor acceptable to the Owner. The Professional Engineer or Land Surveyor shall be registered in the State of Connecticut. Carefully preserve all data and monuments set by the Professional Engineer or Land Surveyor and, if displaced or lost, immediately replace at no additional cost to the Owner.

3.03 UTILITIES

A. Before starting excavation, establish location and extent of any underground utilities occurring in work area. The contractor shall contact “Call Before You Dig” utility locating service at 1-800-922-4455 at least 48 hours prior to the start of any site construction to have existing underground utilities located.

B. Protect utility services uncovered by excavation.

C. Remove abandoned service lines from areas of excavation; cap, plug or seal such lines and identify at grade.

D. Accurately locate and record abandoned and active service lines re-routed or extended. Record locations on Project Record Drawings.

3.04 EXCESS WATER CONTROL

A. Dewatering:

1. Provide and maintain, at all times during construction, ample means and devices with which to remove promptly and dispose of all water from every source entering the excavations or other parts of the Work.

2. Dewater by means that will ensure dry excavations and the preservation of the final lines and grades of bottoms of excavations.

B. Unfavorable weather: Do not place, spread, or roll any fill material during unfavorable weather conditions. Do not resume operations until moisture content and fill density are satisfactory.

C. Softened subgrade: Where soil has been softened or eroded by flooding or placement during unfavorable weather, remove all damaged areas and recompact as specified below for fill and compaction.

3.05 EXCAVATION AND SUBGRADE PREPARATION

A. Perform all excavation required for the construction of pavements, sidewalks and lawns. Trench excavation for pipes and manholes is specified under Section 31 23 33 – Trenching and Backfilling.

B. Depressions: Where depressions result from or have resulted from the removal of surface or subsurface obstructions, open the depressions to equipment working width and remove all debris and soft material.

C. Other areas: Excavate to grades shown on the Drawings. Where excavation grades are not shown on the Drawings, excavate as required to accommodate the installation. Cut off bottoms of excavations level and remove all loose soil.

D. Overexcavation: Backfill and compact all overexcavated areas, as specified below for fill, and at no additional cost to the Owner.

E. Stockpile suitable excavated material for re-use.

F. Excavate and replace rock and unsuitable material as specified below in this Section.

G. After the site has been excavated to subgrade elevation and after all rock and unsuitable material have been removed and replaced with suitable fill or granular fill, as applicable, compact the entire subgrade surface in accordance with the requirements as given below under Fill and Compaction.

H. After compacting, the subgrade surface shall be true to required line and grade.

3.06 GRADING

A. Perform all rough and finish grading required to attain the elevations shown on the Drawings.

B. Grading tolerances:

1. Subgrades under bituminous concrete pavement: Plus or minus 0.06 foot.

2. Subgrades under sidewalks: Plus or minus 0.15 foot.

3. Subgrades under lawns: Plus or minus 0.2 foot.

C. Treatment after completion of grading:

1. After grading is completed, permit no further excavating, filling, or grading.

2. Use all means necessary to prevent erosion of freshly graded areas during construction and until such time as permanent drainage and erosion control measures have been installed.

3.07 UNSUITABLE MATERIAL EXCAVATION

A. The Architect will determine whether materials at the bottoms of excavations are suitable or unsuitable. The Architect will make these determinations during required inspections of completed excavations. Generally, unsuitable material is wet or unstable material that will not give suitable foundation for pipe or structure.

B. When written instructions are received from the Architect, excavate the unstable material to a volume as indicated by the Architect.

C. When unsuitable material has been removed, backfill and compact the excavated area as specified below under Fill and Compaction.

3.08 ROCK EXCAVATION

A. Refer to Section 312314/3.5C for blasting specification.

B. Make rock excavation:

1. To horizontal dimensions that will permit the constructions of pipelines, precast concrete structures, pavements, and lawns, as specified above.

2. To a depth that will provide for at least six inches of bedding material or fill under precast concrete structures and pipelines unless otherwise indicated on the Drawings.

3. To the bottom of base under pavements.

4. To the bottom of topsoil under lawns.

C. Do not proceed with excavation of rock until necessary measurements have been taken and written instructions have been received from the Owner.

3.09 FILL AND COMPACTION

A. Wherever filling is required under any part of a structure or a roadway, use granular fill.

B. Wherever filling is required to bring other areas to required grade, use either suitable fill or granular fill.

C. Filling: Spread the required fill material in layers not exceeding eight inches in uncompacted thickness.

D. Moisture Conditioning: Water or aerate the fill as necessary and thoroughly mix to obtain a moisture content that will permit proper compaction.

E. Compact each fill layer to at least the specified minimum degree. Repeat filling and compaction process until plan grade is attained.

F. Degree of compaction requirements:

1. Compact fill under concrete slabs to a minimum of 95 percent maximum density.

2. Compact fill at all other locations to a minimum of 95 percent maximum density.

3. Determine percentages of maximum density by ASTM D1557, Method C.

4. Refer to Section 312324, Part 3.1 for Structural Fill compaction requirements.

END OF SECTION

PART 1 – GENERAL

1.01 DESCRIPTION

A. Work Included: Excavate trenches for utilities; compacted bedding under and compacted fill over utilities to subgrade elevations; backfilling and compaction. Work under this item also include the complete replacement of all items disturbed by trenching activities, including sidewalks, curbs, signs, pavement, etc.

B. Related Sections:

1. Section 31 20 00 – Earth Moving;

2. Section 31 25 00 – Excavated Soil and Materials Management;

3. Section 31 25 13 – Erosion and Sedimentation Controls;

4. Section 33 40 00 – Storm Drainage Utilities;

5. Section 33 30 00 – Sanitary Sewerage Utilities;

6. Section 33 10 00 – Water Utilities.

1.02 REFERENCES

A. American Society for Testing and Materials (ASTM):

1. ASTM C136 - Method for Sieve Analysis of Fine and Coarse Aggregates.

B. Wherever reference is made to the DOT Specifications, it shall mean the Connecticut Department of Transportation Standard Specifications for Roads, Bridges and Incidental Construction, Form 816 (2004), as modified by Supplemental Specifications issued by the Connecticut Department of Transportation.

1.03 REGULATORY REQUIREMENTS

A. Notify utility companies in accordance with Public Act 77-350 'CALL BEFORE YOU DIG", (1-800-922-4455).

B. Comply with United States Department of Labor, Occupational Safety and Health Administration.

C. Construction Standards for Excavations, 29 CFR part 1926, subpart P.

D. Obtain required permits from authorities.

E. Do not close or obstruct roadways, sidewalks, or hydrants without permits.

F. Comply with all applicable requirements of State and local authorities for trenching, backfilling and maintenance and protection of traffic within city streets.

1.04 SUBMITTALS

A. Samples of filter cloth and warning tape shall be submitted for approval. Other samples and certificates of compliance may be requested.

B. Where sheeting and shoring is used, complete sheeting and shoring sketches and calculations shall be prepared by a Connecticut registered Professional Engineer and shall meet OSHA regulations.

PART 2 – PRODUCTS

2.01 CRUSHED STONE

A. Crushed stone of the size specified shall conform to the requirements of Section M.01.01 of the DOT specifications.

2.02 SAND

A. Conform to Section M.03.01-2 of the DOT Specifications.

2.03 GRANULAR FILL

A. Conform to Section M.02.01 of the DOT Specifications.

2.04 BACKFILL MATERIAL

A. Wherever reference is made on the Drawings or in the Specifications to suitable material, suitable backfill material, and suitable fill material, the material shall be mineral soil substantially free from organic materials, topsoil, wood, trash, and other objectionable materials which may be compressible or which cannot be properly compacted. It shall not contain rocks or lumps larger than six (6) inches in largest dimension, and not more than 15 percent of the rocks or lumps shall be larger than 2 1/2 inches in largest dimension. Further, it shall not contain granite blocks, broken concrete, masonry rubble, or other similar materials. It shall have physical properties such that it can be readily spread and compacted during filling. Snow, ice, and frozen soil will not be permitted.

2.05 GEOTEXTILE FILTER CLOTH

A. Geotextile filter cloth shall conform to the requirements of Section M.08.01-26 of the D.O.T. Specifications. Geotextile shall be approved for subsurface drainage use, Class A.

2.06 WARNING TAPE

A. Warning tape shall be 3-inch wide, detectable, color to suit utility being identified.

2.07 SHEETING AND SHORING

A. Lumber used for sheeting, rangers, bracing, and other construction purposed shall be sound, straight grained, free from shakes, loose knots and other defects liable to impair its strength or durability. Lumber and sheeting may be reused if not ordered left in place and if in good condition. Lumber shall be spruce and/or fir.

PART 3 – EXECUTION

3.01 GENERAL

A. Verify that backfill materials to be used are acceptable.

3.02 PREPARATION

A. Identify required lines, grades, levels, contours, and datum.

B. Maintain and protect existing above and below grade utilities to remain. The contractor shall contact "Call Before You Dig" utility locating service at 1-800-922-4455 at least 48 hours prior to the start of any site construction to have existing underground utilities located.

C. Protect trees, plant life, lawns, rock outcropping, and other features remaining as a portion of final landscaping.

D. Protect benchmarks, existing structures, fences, sidewalks, paving, and curbs from excavation equipment and vehicular traffic.

E. Cut out soft areas of subgrade not capable of insitu compaction. Backfill with granular fill and compact to density equal to or greater than requirements for subsequent backfill material.

3.03 EXCAVATION

A. Excavate subsoil required for utility installation.

B. Excavate rock and unsuitable material as specified in Section 31 20 00 – Earth Moving.

C. Make all trenches open vertical construction with sufficient width to provide free working space at both sides of the trench and around the installed item as required for caulking, jointing, backfilling, and compacting.

1. Depth: Excavate to the elevations shown on the Drawings.

2. Excavation shall not interfere with normal 45 degree bearing splay of foundations.

3. Hand trim excavation. Hand trim for bell and spigot pipe joints. Remove loose matter.

4. Remove lumped subsoil and boulders.

D. Correct unauthorized excavation.

E. Correct areas over-excavated by error. Where trench excavation is inadvertently carried below proper elevations, fill with granular fill and compact to provide a firm and unyielding subgrade or foundation at no additional cost to the Owner.

F. Stockpile excavated material in area designated on site and remove excess material not being used, from site.

G. Keep excavations dry; Construction work to be installed "in the dry". Do not use pipe being constructed for trench drainage.

H. Grade top perimeter of excavation to prevent surface water from draining into trench. Do not obstruct surface drainage, but provide means whereby storm water is diverted into existing gutters, other surface drains, or temporary drains.

3.04 SHEETING AND SHORING

A. Trench Bracing:

1. Properly support all trenches in strict accordance with all pertinent rules and regulations.

2. Brace, sheet, and support trench walls in such a manner that they will be safe and that the ground alongside the excavation will not slide or settle, and that all existing improvements of every kind, whether on public or private property, will be fully protected from damage.

3. In the event of damage to such improvements, immediately make all repairs and replacements necessary at no additional cost to the Owner.

B. The Contractor shall leave in place all sheeting and bracing which the Engineer may direct him in writing to leave in place at any time during the progress of the work for the purpose of preventing injury to structures, utilities, or property, whether public or private. All sheeting to be left in place shall be cut off at least 3' below paved surfaces and 2' below non-paved surfaces.

C. All sheeting and bracing not left in place shall be carefully removed in such manner as not to endanger the construction of other structures, utilities, or property. All voids left or caused by withdrawal of sheeting shall be immediately refilled with sand by ramming with tools especially adapted to that purpose.

D. Sheeting and bracing ordered to be left in place shall not be construed as creating any obligation on his part to issue such order, and his failure to exercise his right to do so shall not relieve the Contractor from liability for damages to persons or property occurring from or upon the work occasioned by negligence or otherwise growing out of a failure on the part of the Contractor to install or leave in place sufficient sheeting and bracing to prevent any caving or moving of the ground.

3.05 PIPE AND STRUCTURE BEDDING

A. Grade trench bottoms for pipes, manholes, catch basins, utility services, and other items to provide a smooth, firm, and stable foundation free from rock points.

B. Support pipe conduit during placement and compaction of bedding fill. Provide continuous bedding layer. Use of blocking not acceptable.

C. Pipes and structures shall be bedded and backfilled as detailed in the drawings.

3.06 PIPE BACKFILLING

A. Backfill trenches to contours and elevations with unfrozen materials.

B. Systematically backfill to allow maximum time for natural settlement. Do not backfill over porous, wet, frozen or spongy subgrade surfaces.

C. Backfill in accordance with trench details.

D. Place and compact backfill materials in continuous layers not exceeding 8 inches compacted depth, compacted as shown on the drawings.

E. Employ placement and compaction methods that do not disturb or damage pipes, conduits or structures.

F. Maintain optimum moisture content of backfill materials to attain required compaction density.

G. Remove surplus backfill materials from site.

H. Leave fill material stockpile areas completely free of excess fill materials.

3.07 TOLERANCES

A. Top Surface of Backfilling: Plus or minus one inch from required elevations.

END OF SECTION

SECTION 312000 – BUILDING EARTHWORK

PART 1 - GENERAL

1.1 GENERAL PROVISIONS

A. Refer to the Drawings and general provisions of the Contract, which are hereby made a part of the Specifications.

B. Examine all Drawings and all other Sections of the Specifications for requirements therein affecting the work of this Section.

C. Coordinate work with that of all other trades affecting or affected by the Work of this Section. Cooperate with such trades to assure the steady progress of all work under the Contract.

1.2 DESCRIPTION OF WORK

A. Work to be done under this Section includes, but is not limited to, providing all labor, materials, equipment, and incidentals as necessary to conduct and complete the Work specified herein and shown on the Drawings.

1. Design, furnish, install, maintain, and remove temporary excavation support systems.

2. Excavate all materials, including fill soils, glacial till soils, cobbles and boulders in the fill and glacial till (sometimes layered and/or nested), existing and remnant building foundations, remnant temporary excavation support walls, weathered bedrock, bedrock, utilities, existing retaining walls, surficial concrete slabs and bituminous pavements, curbs, topsoil, and other materials if so encountered to construct the improvements shown on the Drawings.

3. Preserve and protect existing and new site improvements during the course of the Work.

4. Over-excavate fill, organic alluvial soils, and other unsuitable soils to suitable foundation bearing strata.

5. Prepare, grade, shape, compact and protect all subgrades, backfills, and ground surfaces as shown on the Drawings.

6. Furnish materials from approved off-site source(s) as required to complete the Work.

7. Place and compact backfill materials to construct the improvements shown on the Drawings.

8. Segregate, handle, re-handle, stockpile (on- and off-site), manage, and reuse suitable excavated materials as specified herein and in other applicable Sections.

9. Manage and legally dispose off-site all excess or unsuitable generated materials that cannot be reused on-site and construction generated waste waters as specified herein and in other applicable Sections.

1.3 RELATED SECTIONS

A. Section 312000 - Earth Moving

B. Section 312333 – Trenching and Backfilling

C. Section 312500 – Excavated Soil and Material Management

D. Section 334600 - Building Foundation Drainage Systems

E. Section 310913 – Vibration and Sound Monitoring

F. Section 033000 - Cast-in-Place Concrete

1.4 DEFINITIONS AND REFERENCE STANDARDS

A. Owner: University of Connecticut

B. Architect: Mitchell Giurgola Architects, LLP

C. Structural Engineer: Severud Associates, PC

D. Engineer: Authorized representatives of the Owner. For the work covered under this Section, this term shall include Haley & Aldrich, Inc.

E. Contractor: Entity responsible for completing the work of this Section.

F. Site Improvements: When used in the context of "protecting adjacent site improvements" shall include, but not be limited to, buildings, utilities, pavements, roadways, slabs, sidewalks, curbs, foundations, and all other improvements and features that are outside the limits of the site, or those elements within the limits of the site that are to remain.

G. Zone of Influence (ZOI): The zone containing the bearing soils for soil-supported structures. The ZOI is defined by imaginary lines extending 2 ft laterally from the outside lower edges of a soil bearing structure and down a 1 horizontal to 1 vertical slope to the top of the natural, inorganic bearing soils, bedrock, or other approved bearing materials.

H. ASTM: Specifications of the American Society for Testing and Materials

I. AASHTO: American Association of State Highway and Transportation Officials

J. ACI: American Concrete Institute

K. PCI: Prestressed Concrete Institute

L. Code: Connecticut State Building Code, most recent edition

M. USEPA: United Stated Environmental Protection Agency

N. OSHA: Occupational Health and Safety Administration

O. CTDEEP: Connecticut Department of Energy & Environmental Protection

P. EPA: U.S. Environmental Protection Agency

Q. RSRs: CTDEEP Remediation Standard Regulations

1.5 PROJECT CONDITIONS

A. Prior to submitting a bid, the Contractor shall review and understand the information and reports referenced in Section 003132.

The Contractor shall examine the site as to the need for temporary excavation support systems to limit open cut excavations, to limit the need for lowering foundations to bear on suitable bearing soils otherwise required for open cut approaches, to expedite the construction schedule, to simplify construction logistics, etc.

B. The limits/ locations of temporary excavation support systems will require review and approval by the Construction Manager and Engineer.

C. In case of conflict between regulations or between regulations and Specifications or between/ within Specifications and Drawings, the Contractor shall comply with the strictest applicable codes, regulations, or Specifications.

1.6 QUALITY CONTROL AND ASSURANCE

A. The Engineer will observe the Contractor's earthwork activities, including (as applicable) temporary excavation support system installation, excavation, dewatering, subgrade preparation, and backfilling. The Contractor shall provide sufficient notice to the Engineer to allow the Engineer to be present to observe and test the Work.

B. The Engineer will conduct field and laboratory testing to confirm compliance with the requirements of this Section. Field and laboratory testing will be conducted in general conformance with ASTM or other applicable reference standards. The Engineer may also conduct vibration monitoring as necessary. The Contractor shall cooperate with the Engineer in all respects to facilitate any testing or observations.

C. The presence of the Engineer shall not relieve the Contractor of its responsibility to perform the Work in accordance with the Contract Documents, nor shall it be construed to relieve the Contractor from full and sole responsibility for the means and methods of construction, protection of site improvements against damage and impacts, and for safety on the construction site.

D. The Contractor shall adhere to the applicable requirements of the Standard Specifications, OSHA Standards, and to all other applicable ordinances, codes, statutory rules, and regulations of federal, state, and local authorities having jurisdiction over the Work of this Section and other applicable Sections.

E. The Contractor may conduct additional field and laboratory testing or screening tests for its own information at no additional cost to the Owner.

F. Work not in conformance with the specified requirements shall be improved, or removed and replaced, at no additional cost to the Owner. All costs related to evaluation and testing of nonconforming Work or materials shall be paid for by the Contractor at no additional cost to the Owner.

G. Tolerances:

1. Construct finished soil and backfill surfaces to plus or minus ½-in. of the grades and elevations indicated on the Drawings.

2. Maintain the moisture content of fill material as it is being placed to levels that allow for compaction to the specified degree of compaction.

1.7 SUBMITTALS

A. General:

1. The Contractor shall forward submittals to the Engineer a minimum of three weeks prior to any planned Work related to the Contractor’s submittals.

2. The time period(s) for submittals are the minimum required by the Engineer to review, comment, and respond to the Contractor. The Engineer may require resubmission(s) for various reasons. The Contractor is responsible for scheduling specified submittals and re-submittals so as to prevent delays in the Work.

3. The Contractor’s submittals shall be reviewed and accepted by the Engineer prior to conducting any Work.

4. Acceptance of the Contractor's submittals by the Engineer does not relieve the Contractor of the responsibility for the adequacy, safety, and performance of the Work.

B. Pre-trenching/ Pre-excavating:

1. Methods for pre-trenching/ pre-excavating including procedures for obstruction removal, excavation support, protection of site improvements, backfilling, and compaction.

C. Mass Excavation:

1. A narrative and, if requested by the Engineer, drawings (plans and elevations) describing the following (as applicable to the project): schedule, sequence, and procedures for instrumentation and monitoring, temporary excavation support system installation, excavation, underpinning, subgrade preparation, foundation and slab construction, cold weather subgrade protection, backfilling, dewatering, soil handling, stockpiling, and other related activities. This includes soil management to eliminate cross-contamination of soils.

D. Temporary Excavation Support Systems:

1. Design calculations and drawings prepared and stamped by a Connecticut Professional Engineer retained by the Contractor.

2. Evidence that the Contractor, Subcontractor(s) and the Contractor's Engineer(s) have a minimum of five years' experience in each specialty work item, and that each have completed a minimum of five projects with similar specialty work.

3. Plan layout of the system indicating wall types, configurations and characteristics; dimensions, material properties, locations, spacings, support points of all brace members; and existing and new site improvements.

4. Wall elevation drawings for each side of the excavation indicating locations of wall sections, brace elements, and any temporary penetrations of bracing through the permanent structure, and the relationship of these elements to the permanent structure (including providing a permanent waterproofing detail) and existing site improvements outside the excavation.

5. Details of brace elements, including locations, layouts, sizes, and connections of all members. Locations of bracing members shall not interfere with the construction of the below-grade permanent structure and other structural features and shall permit access for their removal (e.g., tiebacks or soil nails shall not be installed beneath new or existing foundations unless otherwise accepted by the Engineer).

6. Mill certificates for all steel components of the temporary excavation support system. Mill certificates shall be provided upon delivery of steel to the site. Steel components not accompanied with a mill certificate may be rejected by the Engineer until such documentation is provided.

E. Temporary Construction Dewatering Systems:

1. Drawings and supporting engineering calculations for proposed dewatering systems prepared and stamped by a Connecticut Professional Engineer retained by the Contractor as outlined below (as applicable).

   a. Arrangements, sizes, characteristics, capacities, locations and depths and associated instrumentation of all elements of the proposed system.

   b. Technical data sheets for dewatering materials (e.g., filter packs around dewatering wells, well screens).

   c. Calculations supporting well screen and filter pack design.

   d. Descriptions of equipment, materials and procedures for installing, operating, maintaining and removing dewatering systems relative to the proposed sequence of excavation, foundation construction and backfilling.

   e. Estimated groundwater levels inside and outside of the excavation at all relevant stages for design of temporary excavation support systems. These analyses shall be conducted using flow nets or other analytical methods.

   f. Provisions for standby equipment and standby power supply.

   g. Discharge and recharge locations.

   h. Technical data sheets for motors and pumps, including pump curves indicating pump capacities over various ranges of total dynamic head.

   i. Technical data sheets for the flow meter and totalizer proposed to measure flow rate and total volume discharged.

   j. Details regarding schedule and procedure for cleaning sedimentation tanks and bag filters.

   k. Anticipated peak and average discharge rates, and confirm that the storm drain system can accommodate such estimated flows from the site to the point of ultimate discharge.

2. Schematic details, descriptions, design calculations, and supporting technical information for proposed pretreatment systems to treat the groundwater for discharge as required by applicable permits.

3. Submit flow monitoring data (rate and total volume) for dewatering systems on a weekly basis.

4. As applicable, submit permit compliance chemical testing data to the Engineer within two days of receipt from the Contractor's DEEP-certified chemical testing laboratory, and prior to submission to the authority(s) having jurisdiction over the work. The Contractor shall coordinate testing schedules with the laboratory and submittal schedule requirements with the Engineer to ensure that the data is submitted to the authority(s) in accordance with the Permit(s). Based on data collected for the soil and groundwater precharacterization program, compliance testing and treatment (beyond control of suspended solids and possibly pH) are not required.

F. Stockpiling:

1. The Contractor shall propose on-site and/or off-site locations for temporary stockpiling of excavated soils for approval by the Owner. The Contractor shall coordinate the environmental aspects of soil stockpiling with the Owner's Environmental Consultant and Section 312500 – Excavated Soil and Material Management.

G. Backfill Materials and Equipment:

1. Proposed types and sources of all fill and backfill materials, including topsoil. For each type of soil to be utilized as fill or backfill, the Contractor shall deliver two 50 lb bag samples from each borrow source or supplier to the Engineer's laboratory for review and laboratory testing. Do not import any material to the site unless accepted by the Engineer. With each sample provide the following documentation:

   a. Location of borrow source site, including name of the owner or facility name with contact phone number, street address, city, and state.

   b. Present and past usage of the source site and material.

   c. All existing report(s) associated with an assessment of the source site as relates to the presence of oil or hazardous materials.

2. If the materials are not from a commercial borrow pit and/or are suspected of containing oil and/or hazardous materials based on the Engineer's review of the submitted data described above, the Contractor shall submit the below-listed chemical test data on the material. The cost of any required testing shall be bourne by the Contractor. The Engineer will review the data and determine its acceptability for use on site. All sampling of soils for chemical testing shall be performed by a person experienced in sample collection and either: 1) a Registered Professional Engineer or Licensed Environmental Professional registered in the State of Connecticut, 2) a Professional Geologist registered in the State of Connecticut, 3) a certified groundwater of environmental professional, or 4) an authorized representative of the one of the persons listed above. Samples of each material shall be submitted to a DEEP-certified laboratory.

a. CT Extractable Total Petroleum Hydrocarbons (CT ETPH) every 150 cy.

b. Volatile Organic Compounds (EPA Method 8260) every 250 cy.

c. PCB and Pesticides (EPA Method 8080) every 250 cy.

d. Thirteen Priority Pollutant Metals (EPA Method 6000-7000 series) every 250 cy.

e. Semi-Volatile Organic Compounds (EPA Method 8270) every 250 cy.

f. Synthetic Precipitation Leaching Procedure (SPLP) (EPA Method 1312) every 250 cy.

g. TCLP (for a particular parameter) if the measured concentration for that particular parameter exceeds twenty times the RCRA Hazardous Waste TCLP Regulatory criteria.

3. Submit additional material samples every 5,000 cu. yd. throughout the course of the Work, if requested by the Engineer, to evaluate the consistency of the source or process (geotechnically), at no additional cost to the Owner.

4. Details of compaction equipment, including descriptions, product literature, specifications and ratings, proposed for use in compacting fill and backfill materials.

1.8 INDEMNITY

A. Notwithstanding full compliance with this specification including but not limited to acceptance of the Contractor's submittals, the Contractor shall be solely responsible for damage, direct or indirect, arising from the work of this and other related sections, and shall hold the Owner, Owner's Representative, Architect, Structural Engineer, and Engineer harmless from any costs, liens, charges, claims or suits, including the costs of defense and reasonable attorneys' fees, arising from such damage, real or alleged. The Owner, Owner's Representative, Architect, Structural Engineer, and Engineer shall be named as additional insureds on any insurance policy covering the work of this and other related sections carried by the Contractor. This requirement shall also be enforced on any subcontractor.

PART 2 - PRODUCTS

2.1 MATERIALS

A. All materials to be imported to the site shall not contain detectable amounts of oil and/or hazardous materials unless otherwise approved by the Owner and Engineer.

B. Granular Fill: shall consist of clean, aggregate sand and gravel material free of organic material, asphalt, brick, concrete, loam, trash, snow, ice, frozen soil, cinders, ash, slag, or other deleterious material and well graded within the following limits:

Sieve Size (ASTM D422)	Percent Passing by Weight
6 in.	100
No. 4	30 – 80
No. 40	10 – 50
No. 200	0 – 8

Notes:
1. Use a maximum 3-in. size for fill placed within 12 in. of concrete slabs, footings, and foundation walls.
2. For Compacted Granular Fill placed for drainage behind foundation and retaining walls, the maximum percent passing the No. 200 sieve shall be 5%.

Granular Fill shall be used below foundations, slabs, sidewalks, as drainage medium for foundation perimeter drainage systems, and at other locations shown on the Drawings or indicated in the Specifications. Granular Fill shall also be used to backfill above, below, and to the sides of new site structures and utilities and below pavements unless otherwise noted on the Drawings or approved by the Engineer.

C. Common Fill: shall consist of well-graded, natural, mineral soil free from organic materials, loam, wood, snow, ice, frozen soil, cinders, ash, slag, asphalt, brick, concrete, trash, debris and other weak, compressible, or deleterious materials. Off-site Common Fill shall not contain particles larger than 4 in. in maximum dimension and shall have a maximum of 80 percent passing the No. 40 sieve and a maximum of 30 percent passing the No. 200 sieve. It shall have a maximum dry density of at least 120 pounds per cubic foot (unless otherwise approved by the Engineer) and have physical properties such that it can be readily spread and compacted to the specified densities in a reasonable length of time. The material shall not contain materials subject to decay, decomposition, or dissolution. Some on-site fill soils may be used as Common Fill in accordance with the requirements herein, if approved by the Engineer. The Contractor shall mechanically screen on-site soils to remove debris prior to reuse as directed by the Engineer at no additional cost to the Owner. Only those soils approved by the Engineer shall be reused on-site.

D. Processed Aggregate Base: shall comply with all requirements of State of Connecticut Department of Transportation Standard Specifications for Roads, Bridges, and Incidental Construction (Form 816) for Processed Aggregate Base, M.05.01. Processed Aggregate Base shall be used at the locations indicated on the Drawings or as otherwise indicated by the Engineer.

E. Gravel Subbase: shall comply with all requirements of State of Connecticut Department of Transportation Standard Specifications for Roads, Bridges, and Incidental Construction (Form 816) for Gravel Subbase, M.02.06. Gravel Subbase of the specified

Gradation (A or B) shall be used at the locations indicated on the Drawings or as otherwise indicated by the Engineer.

F. ¾-in. Crushed Stone: shall comply with all requirements of State of Connecticut Department of Transportation Standard Specifications for Roads, Bridges, and Incidental Construction (Form 816) for No. 6 crushed stone (¾-in. size), M.01.01. Crushed stone used for drainage applications (e.g., underslab and foundation drain systems) shall be washed at the source site. Crushed stone shall be used at the locations indicated on the Drawings or as otherwise indicated by the Engineer.

G. Gravel/Sand Cushion: shall comply with all requirements of State of Connecticut Department of Transportation Standard Specifications for Roads, Bridges, and Incidental Construction (Form 816) for M.08.01.21 (Bedding Material). Gravel/sand cushion shall be used to bed pipes (other than for storm or sanitary sewer pipes), and at the locations indicated on the Drawings or as otherwise indicated by the Engineer.

H. Geotextile (aka Filter Fabric): shall consist of 6-ounces per square yard minimum, needle-punched, non-woven, synthetic, chemically resistant non-biodegradable fabric. Geotextile shall be used to construct building foundation drainage systems, to prevent fine-grained soils from migrating into coarse grain materials as judged necessary by the Engineer, and at the locations shown on the Drawings or indicated in the Specifications. Stronger and/or heavier products may be required in "structural" applications as determined by the Engineer.

I. Polyethylene Sheeting: shall be used at the locations shown on the Drawings or indicated in the Specifications.

J. Pipe Bedding Material: shall consist of Granular Fill unless otherwise noted on the Drawings or indicated in the Specifications.

K. Lean Concrete: shall have a 28-day compressive strength of f'c = 1,500 psi, unless otherwise noted, with a maximum slump of 6 in. Lean concrete may be used to backfill excavations in lieu of Granular Fill at locations proposed by the Contractor and approved by the Engineer.

L. Flowable Fill: shall consist of a commercial mixture of cement, sand (flyash permitted if approved by the Engineer), and water with a minimum 28-day compressive strength of 200 psi. Flowable fill shall be used at locations proposed by the Contractor and approved by the Engineer.

M. Balance of materials shall be as indicated on the Drawings and/or as specified elsewhere in the Contract Documents.

2.2 DEWATERING SYSTEMS

A. Materials and equipment shall be of suitable size, capacity and type to:

1. Dewater soils below the final excavation level as specified herein.

2. Collect and remove groundwater, groundwater seepage, precipitation, surface water runoff, and other construction-generated wastewaters from the excavation for the purpose of maintaining dry and stable working surfaces.

3. Maintain suspended solids and other contaminants below permit criteria.

4. Pump, store, manage, treat and discharge treated groundwater as necessary.

B. Materials and equipment shall be of appropriate type and maintained in good working order at all times during the course of the Work. Any leaks or spills shall be immediately fixed or cleaned.

C. Employ standard equipment capable of installing dewatering system elements under site conditions at the planned time of installation. Under no circumstances shall use of any drilling fluids other than potable water or degradable polymer slurry be permitted. Drilling procedures shall not result in borehole smearing.

D. Dewatering system elements shall conform to American Water Works Association (AWWA) Standards for Water Supply Wells.

E. Provide sampling ports in the discharge line after sediment control tanks/ bag filters and pretreatment systems for sampling water in accordance with applicable permits.

F. Base Bid treatment systems are required to control suspended solids and pH.

G. Pretreatment systems for chemical contamination is not part of the Base Bid, and may consist of oil/water separators, granular activated carbon units, and other types of materials and equipment required for treating the groundwater to meet applicable permit criteria. Filtration or other measures to remove suspended solids and storage or fractionation tanks to temporarily store groundwater shall be provided per the Base Bid, and are not considered part of the pretreatment system.

PART 3 - EXECUTION

3.1 INSPECTION

A. Examine the site and all Work prepared by others and report to the Engineer in writing any conditions detrimental to the proper and timely completion of the Work of this Section. Do not proceed with the Work until unsatisfactory conditions have been corrected in an acceptable manner.

3.2 GENERAL REQUIREMENTS

A. The Contractor shall conduct all Work associated with this Section to maintain vibrations measured on the ground surface at adjacent buildings below 0.5 in. per second (ips) unless approved by the Engineer.

B. Excavation, backfilling, and other earthwork activities shall conform with the Contract Documents and submittals that are acceptable to the Engineer. No Work shall be performed unless it is conducted under the observation of the Engineer, and in accordance with the submitted schedule and sequence.

C. Prevent erosion at the site at all times.

D. All excess excavated material shall be removed from the site and shall be legally disposed of by the Contractor.

E. Use of On-Site Materials:

1. Some existing on site soils may be suitable for reuse as Common Fill. The Contractor shall reuse on-site excavated soils as indicated herein, as approved by the Engineer. The Contractor shall conduct all on-site reuse activities, including screening and stockpiling, at no additional cost to the Owner.

2. Do not excavate or remove any material from the site or right of way, which is not within the excavation, as indicated, without written authorization from the Owner or Engineer.

3. If unanticipated contaminated material is suspected or encountered during an excavation, the Contractor shall contact the Owner or Engineer as soon as possible. The Owner or Engineer will provide direction on how to proceed and dispose of the excavated material.

F. Stockpiling of Material:

1. Establish material stockpiles at locations that are acceptable to the Engineer, will not interfere with the progress of the Work, and will not damage site improvements. Re-handling, if required, shall be the responsibility of the Contractor at no additional expense to the Owner.

2. Cover stockpiles with poly sheeting at the end of each day to limit erosion, prevent fugitive dust, and protect stockpiles from becoming saturated due to precipitation unless otherwise approved by the Engineer.

G. Unfavorable Weather:

1. Freezing Weather:

a. Fill materials and/or concrete shall not be placed on snow, ice, frozen subgrades, or frozen soil.

b. Fill materials and lean concrete shall not be frozen when placed or be allowed to freeze prior to or after compaction or placement. At the end of each day's Work during freezing weather, the last lift of fill, after compaction, shall be rolled by a smooth wheeled roller to eliminate

ridges of un-compacted soil. Fill materials and lean concrete shall be covered with insulating tarps or heated during freezing weather. The Contractor shall suspend backfilling operations and placement of lean concrete when air temperatures are below 32 degrees F if directed by the Engineer.

c. Soil bearing surfaces below slabs and foundations shall be protected against freezing, before and after concreting. Frost protection shall be provided in a manner acceptable to the Engineer as soon as possible after foundations or structures are constructed.

d. Do not excavate to full indicated depth when freezing temperatures may be expected, unless the foundation or slab is poured immediately after the excavation has been completed. Protect the excavation from frost if placing of concrete is delayed. Where footings, slabs or mudmats are exposed to freezing temperatures, they shall be protected to prevent damage to the concrete by freezing or frost penetration into the soil upon which they rest. Where foundations are exposed over the winter during construction, provide at least 3.5 ft of earth cover above the bottom surface of concrete, plus hay or other protection if temperatures are severe, as directed by the Engineer.

2. Wet Weather:

a. If fill material placement, spreading, rolling, or compaction operations are interrupted by rain or other unfavorable conditions, do not resume such operations until ascertaining that the moisture content and density of the previously placed soil are as required by these specifications.

H. Maintenance of Excavations and Slopes:

1. Stability of excavations and job safety are the sole responsibility of the Contractor.

2. Shoring and bracing of trenches and other excavations shall be in accordance with the requirements of the Department of Labor Occupational Health and Safety (OSHA) 29 CFR 1926 dated October 31, 1989, and subsequent amendments and revisions.

I. Bedrock excavation, if and where required, shall be completed using hoe-rams, pneumatic hammers, hydraulic splitters, drilling and splitting, or other procedures proposed by the Contractor and accepted by the Engineer. Excavation of bedrock using controlled blasting is not permitted unless otherwise approved by the Owner. Excavation of bedrock shall be unclassified and paid as part of the Base Contract Price of this Section.

3.3 EXCAVATION

A. General Requirements:

1. Excavate to the lines and grades indicated, and no deeper unless approved.

2. Excavate and backfill using appropriate methods and equipment in sufficient quantity, models, and sizes to perform the Work in the minimum time possible.

3. Coordinate the sequence of excavation with all construction activities, including installation of temporary excavation support systems, construction dewatering, foundation construction, cold weather protection, placement of structures, stockpiling, etc.

4. Conduct excavation in such a manner that movements of temporary excavation support systems are minimized and damage to adjacent buildings, structures, and utilities is prevented.

5. Coordinate the rate of excavation with ground conditions encountered in the field and observations from instrumentation as necessary to prevent movement and loss of ground during excavation and support operations.

6. Prevent disturbance to soil subgrades.

7. Exercise care to preserve the material below and beyond the lines of all excavations. Where excavation is carried below required grade, backfill to the structure subgrade according to methods and materials approved by the Engineer.

8. When excavation has reached required subgrade elevations, notify the Engineer, who will observe the excavation and bearing conditions. After review by the Engineer, the excavation may be required to proceed deeper due to Contractor disturbance of the subgrade, variation in subsurface conditions, or the presence of unsuitable soils at the design subgrade level. Replace the excavated material with Granular Fill, ¾ in. Crushed Stone (fully wrapped in geotextile), or Lean Concrete as directed by the Engineer.

9. Excavate trenches to the depth indicated or required. Carry the depth of trenches for piping to establish the indicated flow lines and invert elevations. Excavation for the convenience of the Contractor shall conform to limits acceptable to the Engineer, and shall be at no additional cost to the Owner.

10. Unauthorized Excavations:

a. Unauthorized excavation consists of removal of materials beyond required subgrade elevations or dimensions without specific direction of the Engineer. Unauthorized excavation, as well as remedial Work directed by the Engineer shall be at the Contractor's expense.

b. Backfill and compact unauthorized excavations with Granular Fill, ¾ in. Crushed Stone (fully wrapped in geotextile), or Lean Concrete as specified for unauthorized excavations unless otherwise directed by the Engineer.

3.4 PROTECTION AND ABANDONEMENT OF UTILITIES

A. Existing utilities within the building footprint that are to be decommissioned shall be excavated and removed with excavations backfilled in accordance with the provisions of this Section. If proposed by the Contractor and accepted by the Engineer, it may be feasible to leave some utilities in-place within the building area (with the exception of those located within the ZOI of new footings, which shall be removed) provided they are filled with lean concrete. Abadonement in-place shall be reviewed on a case by case basis.

B. Existing (to remain in service) and new utilities within the building footprint shall be fully encapsulated in lean concrete to protect the building slab and foundations in the event of a utility break. Such lines shall however not remain in-place or be constructed within the ZOI of new footing foundations. At such locations, footings shall be stepped down and the utility bridged over using a grade beam or other similar approach.

3.5 DEWATERING

A. Provide, operate and maintain site and subsurface drainage and dewatering in an acceptable manner as required to complete the work throughout the course of the project.

B. Provide, maintain, and operate sumps, wells, pumps and related equipment, including stand-by equipment, of sufficient capacity to maintain excavations and trenches free of water 24 hours per day to enable all work to be conducted in-the-dry and to protect bearing surfaces from disturbance. Dewatering systems shall be installed, operated, and maintained in a manner that prevents pumping of fine-grained soils.

C. Water from excavations shall be disposed of in such manner as will not cause injury to public health, public and private property, existing work, work to be completed or in progress, roads, walks, and streets, or cause any interference with use of same by public. Under no circumstances shall concrete or fill be placed in excavations containing free water.

D. The Contractor shall complete excavations below groundwater level in-the-dry to maintain the undisturbed condition of the soils.

E. Maintain groundwater in the bearing stratum at least 24 in. below lowest exposed subgrade level. If the dewatering methods have not been adequate and the bearing soils disturbed, remove disturbed soil as directed by the Engineer and replace with approved materials as specified herein at no additional cost to the Owner.

F. Pumped groundwater and surface water runoff shall be initially pumped to a settling basin and filtered (using bag filters as necessary) to remove suspended solids prior to discharge.

G. Comply with federal, state, and local codes, ordinances, permits and regulations for disposal of pumped water, either surface water runoff or groundwater, and collected sediment. Discharge shall be monitored using a flow meter and totalizer installed on the discharge pipe.

H. Water collected from temporary construction dewatering systems shall be discharged to either site storm drains or sanitary lines.

I. Conduct any and all permit compliance testing on water pumped from temporary construction dewatering systems.

J. In addition to controlling groundwater seepage and construction generated waters in the excavation, the dewatering system shall be capable of handling precipitation or surface water that enters the excavation in a manner that will prevent damage to new construction.

K. Remove and backfill other dewatering elements when no longer required, using methods acceptable to the Engineer. Backfill any voids resulting from dewatering system removal with cement grout, concrete, or other material as directed by the Engineer to prevent potential loss of ground.

3.6 SUBGRADE PREPARATION AND PROTECTION

A. General:

1. Complete the excavations to the required subgrade elevations allowing for subbase material, mud mats, bedding layers, plus any additional depth required to accommodate (as applicable) drainage layers, waterproofing, geotextiles, pipes, pavements, sidewalks, etc.

2. All subgrades must be observed and accepted by the Engineer prior to placement of Granular Fill, Crushed Stone, Lean Concrete, or any structure over the subgrade.

3. Where noted by the Engineer, backfill all holes or voids encountered outside of minimum excavation limits with materials approved and accepted by the Engineer.

4. Backfill all holes and low points that will not otherwise be removed in the course of the Work with materials acceptable to the Engineer to the subgrade elevation indicated on the Drawings.

B. Soil Subgrades:

1. Foundation Elements:

a. Subgrades for building and retaining wall footings shall consist of undisturbed, naturally deposited Glacial Till or bedrock (following over-excavation and replacement as indicated herein). Miscellaneous fill, organic soils, debris, and other unsuitable foundation materials, if encountered at subgrade, shall be over excavated and backfilled with the aforementioned materials. Subgrades shall be protected with a minimum 6 in. thickness of ¾ in. Crushed Stone fully wrapped in geotextile or a 3-in. thick lean concrete mudmat. Bedrock, if encountered, shall be removed to a minimum of 6 in. below the subgrade level unless otherwise approved by the Engineer, and replaced with Crushed Stone. Where lean concrete is placed in over-excavations beneath footings, the lean concrete block shall be: 1) formed vertically, and 2) extend a minimum of 1 ft beyond the edges of the footing.

b. Subgrades for slabs shall consist of re-compacted existing site fill soils (deemed by the Engineer to be stable under proof-compaction), engineered and compacted fill, or undisturbed, naturally deposited Glacial Till. The final 12 in. below slabs shall consist of ¾ in. Crushed Stone (fully wrapped with geotextile) (part of the underslab drain system).

c. Boulders exposed at the subgrade shall be removed to a depth of at least 6 in. below footings and 12 in. below slabs.

d. Excavate materials to 2 ft above the indicated subgrade level by general excavation methods.

e. Excavate the final 2 ft with smooth edged bucket equipment. Equipment shall not be operated directly on prepared soil subgrades. Excavation shall progress until undisturbed naturally deposited Glacial Till are achieved. The bearing surface shall be made smooth, and cleaned of all disturbed material. Backblading of soil surfaces to smooth disturbed soil will not be permitted.

f. Moisture condition (where necessary) and re-compact subgrade soils with at least four passes of suitable heavy vibratory compaction equipment until subgrade soils are firm and acceptable to the Engineer. The Engineer may, at its discretion, conduct field unit weight tests on the re-compacted subgrade soils prior to placement of backfill to confirm that the subgrade soils have been compacted in accordance with the requirements herein.

g. The Contractor shall note that over-excavation and replacement of locally thicker fills below footings will be required The Contractor shall

incorporate such over-excavation requirements in its costs for the project, excavation support systems, dewatering systems, etc.

2. Utilities:

   a. Excavate all soils to at least 6 inches below bottom of proposed utility lines, or deeper if required to place bedding materials shown on the Drawings.

   b. Soil subgrades below utilities shall consist of undisturbed, naturally deposited inorganic soils or re-compacted site fill soils that are free of contamination, free of organic matter, stable under proof-compaction, and otherwise suitable to the Engineer. Unsuitable soils, materials, or soft and unstable soils present at the subgrade level shall be over-excavated up to 2 ft below subgrade level and backfilled with Granular Fill or other materials approved by the Engineer. Bedrock, if encountered, shall be removed to a minimum of 6 in. below the utility invert elevation.

   c. Excavations for manholes, catch basins and miscellaneous site structures shall provide 18 in. minimum clearance on all sides.

   d. Trench excavation shall be of sufficient width and depth at all points to allow pipes to be laid, and appurtenant work to be built in a workman-like manner and, when needed, to allow for sheeting and shoring, pumping and draining, and/or for removing and replacing any unsuitable materials.

   e. The Contractor shall design, furnish, place, remove or leave in-place (as directed by the Engineer) all temporary excavation support systems and bracing required to support the sides of all trenches and other excavations needing lateral support, in accordance with OSHA.

3. Pavements:

   a. Excavate and remove organic soils or other materials judged unsuitable by the Engineer. Unsuitable soils or materials present at the subgrade level shall be over-excavated to a minimum depth of 1 ft below the subbase subgrade level and replaced with Common Fill, Granular Fill, or other materials approved by the Engineer. Other abandoned below-grade features such as remnant foundations, building walls, and retaining walls shall be removed to a depth of 2 ft below the subbase subgrade level unless otherwise approved by the Engineer, and replaced with Common Fill, Granular Fill, or other materials approved by the Engineer. Bedrock, if encountered, shall be removed to a minimum of 12 in. below the subbase subgrade level unless otherwise approved by the Engineer, and replaced with Common Fill, Granular Fill, or other materials approved by the Engineer.

b. Soil subgrades below the pavement base course shall consist of glacial till soils or re-compacted site fill soils that are free of contamination, free of organic matter, stable under re-compaction, stable under proof-rolling with a vibratory roller imparting a minimum 20-ton dynamic force or a fully loaded 10-wheel dump truck (less than ½ in. elastic deformation during proof-rolling), and otherwise suitable to the Engineer.

c. Moisture condition (as necessary) and re-compact subgrade soils with at least four passes of suitable heavy vibratory compaction equipment until subgrade soils are firm and acceptable to the Engineer. The Engineer may, at its discretion, conduct field unit weight tests on the re-compacted subgrade soils prior to placement of backfill or pavement base materials to confirm that the subgrade soils have been compacted in accordance with the requirement herein.

4. Sidewalks:

a. Excavate and remove organic soils or other materials judged unsuitable by the Engineer. Unsuitable soils or materials present at the subgrade level shall be over-excavated to a minimum depth of 1 ft below the subbase subgrade level and replaced with Common Fill, Granular Fill, or other materials approved by the Engineer. Other abandoned below-grade features such as remnant foundations, building walls, and retaining walls shall be removed to a depth of 2 ft below the subbase subgrade level unless otherwise approved by the Engineer, and replaced with Common Fill, Granular Fill, or other materials approved by the Engineer. Bedrock, if encountered, shall be removed to a minimum of 12 in. below the subbase subgrade level unless otherwise approved by the Engineer, and replaced with Common Fill, Granular Fill, or other materials approved by the Engineer.

b. Soil subgrades below sidewalk base course shall consist of glacial till soils or re-compacted site fill soils that are free of contamination, free of organic matter, stable under proof-compaction, and otherwise suitable to the Engineer.

c. Moisture condition (as necessary) and re-compact subgrade soils with at least four passes of suitable vibratory compaction equipment until subgrade soils are firm and acceptable to the Engineer. The Engineer may, at its discretion, conduct field unit weight tests on the re-compacted subgrade soils prior to placement of backfill or sidewalk base materials to confirm that the subgrade soils have been compacted in accordance with the requirement herein.

5. Backfill Surfaces:

a. Backfill surfaces that become disturbed, contaminated with clay, or otherwise unacceptable to the Engineer shall be removed and replaced with acceptable backfill at no additional cost to the Owner.

C. Cold Weather Subgrade Protection:

1. When the atmospheric temperature is less than 32 degrees F, the Contractor shall protect excavation subgrades and Lean Concrete from freezing. Cold weather subgrade protection may consist of an earth fill cover, hay cover, insulation cover, heating, or other means of protecting the subgrade materials from freezing.

2. Subgrades that have been permitted to freeze by the Contractor will be judged to be unsuitable for placement of Lean Concrete or Granular Fill by the Engineer. The Contractor at the Contractor's expense shall conduct additional excavation of subgrade soils that have frozen and replacement with materials acceptable to the Engineer.

3.7 BACKFILLING

A. General:

1. Backfill excavations as promptly as Work permits, but not until the subgrade, or below grade construction, is acceptable to the Engineer.

2. Previously placed, and possibly accepted, backfill shall be excavated and replaced at no additional cost if the backfill does not conform to the Contract Documents.

3. During compaction operations, incidental compaction due to traffic by construction equipment other than that used specifically in compaction operations will not be credited toward the required minimum coverages specified.

4. Compaction by jetting, puddling, or flooding is prohibited.

5. Exercise care in the placement of backfill against walls and directly in contact with waterproofed structures such that stones contained in the backfill do not damage waterproofing.

6. Repair any damage to waterproofing that occurs during placement and compaction operations at no additional cost to the Owner.

7. Control groundwater and other water in excavations as required to permit efficient collection and removal with minimal disturbance to materials being placed.

8. Placement of fill and backfill shall be systematically conducted in the specified uniform layer thicknesses.

9. Measurement of backfill layer or lift thickness shall be conducted in all cases prior to compaction.

10. Backfill excavations as promptly as Work permits, but not until completion of the following:

    a. Prior to placing backfill materials, complete the specified subgrade preparation.

    b. Acceptance by the Engineer of construction below finish grade including, where applicable, dampproofing, waterproofing, utility placements, etc.

    c. Completion of quality control testing, acceptance by the Engineer and recording locations of underground utilities.

    d. Removal of concrete formwork unless formwork is specified to remain in place.

    e. Removal of trash and debris.

B. Compaction Equipment:

1. In all cases, the Contractor shall only use compaction equipment that is deemed acceptable by the Engineer.

2. Compact each lift and subgrade with a minimum of four coverages of acceptable compaction equipment.

3. Compaction in open areas shall be conducted with heavy smooth-wheeled vibratory rollers imparting a dynamic force of at least 20 tons, as approved by the Engineer.

4. Compaction in confined areas (against walls, piers, and in trenches) shall be conducted with acceptable equipment such as hand guided vibratory compactors or mechanical tampers imparting a dynamic force of at least 5,000 lbs, or as approved by the Engineer.

C. Placement, Compaction, and Protection

1. All backfill material shall be placed "in the dry" on subgrades acceptable to the Engineer. The Contractor shall dewater excavated areas as required to perform the Work in such a manner as to preserve the undisturbed state of the approved

subgrade material (i.e., maintain groundwater levels a minimum of 2 ft below excavation subgrades at all times).

2. Place backfill materials in layers not exceeding 12 in. in open areas, and 6 in. in confined areas. Compact each layer with a minimum of four coverages of the equipment described herein and achieve the specified degree of compaction.

3. Compaction Requirements:

Location	Material Type	Min. Compaction Requirements
Beneath and around footings, and under soil-supported slabs	Granular Fill	95%
Outside building foundation walls	Common Fill, Granular Fill	95% within 3 ft of finished grade 92% to 3 ft below finished grade
Parking, roadways, and sidewalks	Base Course, Subbase Course, Granular Fill, Common Fill	95% within 3 ft of finished grade 92% to 3 ft below finished grade
Landscape Areas	Common Fill Planting Media	90% Varies (refer to Section 02915)

Notes:
1. Minimum compaction requirements refer to percentages of the maximum dry unit weight determined in accordance with ASTM D1557.
2. Refer to Drawings and applicable specification sections for locations of various material types for each application.

4. Protection: Contractor shall not begin backfilling against walls until the walls and support slabs have sufficiently aged to attain the strength required to resist backfill pressures without damage. Coordinate backfilling of foundation walls designed as retaining walls with the Structural Engineer. Contractor shall correct any damage to the structures caused by backfilling at no added cost to the Owner.

5. Backfilling Utility Trenches:

   a. Do not backfill trenches until the Engineer has made tests and observations and authorizes backfilling. Use care in backfilling to avoid damage or displacement of pipe systems.

   b. Place and compact bedding materials below the pipe or utility inverts.

c. Perform the Work in accordance with applicable utility sections listed under related work and in conformance with trench details shown on the Drawings.

3.8 GRADING AND COMPACTING

A. Fine Grading and Compacting: Shape the subgrade, to a smooth surface conforming to the indicated cross section, and compact (granular subgrades only) the top 6 in. of the subgrade material in accordance with the requirements herein. Cut down all high spots, fill depressions and re-compact until the surface is smooth and satisfactorily compacted.

B. Grading and Finishing: In areas designated for grading and finishing, rake or machine grade the areas to remove stones over two inches and other unsatisfactory material; fill depressions and finish the surface within the indicated tolerances.

C. Unless noted otherwise in the Drawings or specifications, grades at the perimeter of excavated areas shall be gradually sloped down to existing grades.

PART 4 - MEASUREMENT AND PAYMENT

4.1 MEASUREMENT

A. Earthwork will not be measured but will be paid for as part of the Base Contract Price and shall include furnishing all material, mobilization, labor, equipment, tools, and incidentals necessary to complete the Work specified herein and shown on the Drawings. No separate measurement or payment will be made for acquisition of permits, backfill, equipment, material disposal, temporary excavation support systems, pre-trenching, pre-excavating, concrete mudmats, construction dewatering (including baffled sedimentation tanks, bag filters, flow meters, totalizers, and incidentals), bedrock excavation, stockpiling, police details, material handling and re-handling, over-excavation and replacement of unsuitable soils, surveying, screening, hoe-ramming, geotechnical instrumentation, or other associated items or work considered incidental to the conduct the Work of this Section.

END OF SECTION

SECTION 312500 – EXCAVATED SOIL AND MATERIAL MANAGEMENT

PART 1 - GENERAL

1.1 GENERAL PROVISIONS

A. Provide all facilities, labor, materials, equipment, transportation, supervision, and related work necessary to complete the work specified in this Section, and as shown on the Drawings.

B. Examine all Drawings and all other Sections of the Specifications for requirements therein affecting the work of this Section. All work under this Section of the Specifications shall be performed in accordance with Division 01 (General Requirements).

C. Coordinate work with that of all other trades affecting or affected by the Work of this Section. Cooperate with such trades to assure the steady progress of all work under the Contract.

D. All work shall be performed in accordance with applicable codes, permits and regulations, and the requirements of all local, state, and federal agencies having jurisdiction over the work.

1.2 DESCRIPTION OF WORK

A. This Section provides procedures and requirements that shall be referenced for all on-site and off-site management of excavated soils and materials. Material classification; stockpiling; off-site transportation; off-site reuse, recycling, treatment, and disposal; measures to control dust, odors, and gases; and contingencies are also included. The Contractor shall engage a Soil Broker to assist Contractor with work specified herein. The following Work shall be undertaken by the Contractor:

1. On-site processing and on-site reuse of excavated soils in accordance with the criteria contained herein and all applicable state and federal laws and regulations.

2. Excavate, handle, re-handle, load, and transport soils and materials from the site to legal off-site disposition (i.e., reuse, recycling, treatment, and disposal facilities) or temporary stockpiling facilities in accordance with the criteria contained herein and all applicable state and federal laws and regulations. Work shall include loading, transporting, and legal disposal (including associated laboratory chemical testing) of soils stockpiled by others during the previous enabling project work.

3. At the direction of the Environmental Consultant or the Soil Broker, temporarily stockpile soils that have not been precharacterized, appear inconsistent with precharacterization data based on visual or olfactory evidence of contamination or other field screening, require additional chemical testing, or are approved for reuse on-site in accordance with the requirements contained herein. The

Conformed Set - May 29, 2015

Contractor may also determine the need for temporary stockpiling to coordinate soil disposal or for other reasons. The Contractor's schedule and work sequence shall consider the need for temporary stockpiling and the impact of limited available space at the site. No more than 50 cu. yds. of material may be stockpiled on site at any time. Additional stockpiles shall be at a University of Connecticut property designated by the Owner if space for such stockpiling is available, or at an off-site location identified by the Contractor and approved by the Owner.

4. Determine the destination facility using the chemical test data provided and additional data as needed, and contract for off-site reuse, recycling, treatment, and disposal directly with each facility proposed by the Contractor and approved by the Owner and Environmental Consultant. The Contractor and Soil Broker shall complete all paperwork necessary to transport excavated soils and materials from the site to Owner-approved off-site facilities as specified herein. Preparation of an opinion letter by a registered environmental professional as required by receiving facilities shall be as follows:

Work Scope Item	**Party Responsible for Letter Preparation**
Excavation and Disposal from Building and Tunnel	Owner
Excavation and Disposal from Site Work, Utilities, Retaining Walls	Contractor/Soil Broker
Disposal of Enabling Package Soils Stockpiled Previously Excavated by Others	Contractor/Soil Broker

5. For disposal of Group I-1 soils at Group I facilities (defined in Section 3.2(A)(1)) other than regulated landfills, the Contractor shall determine if local municipal ordinances require filing of applications for any permits relative to reuse, stockpiling, or transport of soils within the municipality of the receiving site. The Contractor shall incorporate the time to file and obtain such permits in the planning and execution of its work. The Contractor shall obtain the permit unless otherwise indicated.

6. Provide equipment (excavator or drill rig as appropriate) and labor to perform additional on-site investigation and obtain additional samples requested by the Contractor's proposed receiving facilities, Owner, or Environmental Consultant. Sample collection shall be performed by the party responsible for opinion letter preparation as identified in Paragraph 1.2.A.4. The times required for additional sampling, laboratory testing, and data review by facilities shall be coordinated and considered in the Contractor's project sequence and schedule.

7. Coordinate with proposed off-site receiving facilities and the Environmental Consultant (and incorporate into the project sequence and schedule) additional chemical testing that may be required prior to and/or during construction (including testing that may be required by Environmental Consultant for further

soil characterization), and the times required for additional sampling, laboratory testing, and data review by the Contractor's proposed off-site receiving facilities, Owner, and Environmental Consultant. Contractor shall submit all samples to a chemical testing laboratory acceptable to the Owner and Environmental Consultant. Responsibility for payment of additional laboratory testing costs shall be as summarized below.

Work Scope Bid Item	**Purpose of Testing**	**Party Responsible for Cost of Testing**
Lump Sum Excavation and Disposal of Soils from Building and Tunnel	Characterization required by receiving facility	Contractor
Lump Sum Excavation and Disposal of Soils from Building and Tunnel	Additional characterization at Contractor's discretion to re-classify soils for potential less restrictive disposal requirements	Contractor
Lump Sum Excavation and Disposal of Soils from Building and Tunnel	Additional characterization at Environmental Consultant's discretion to re-classify soils for potential more restrictive disposal requirements	Owner
Unit Price Excavation and Disposal from Building and Tunnel	Characterization required by receiving facility	Owner
Unit Price Excavation and Disposal from Building and Tunnel	Additional characterization as required to further classify soils.	Owner
Excavation and Disposal of Soils from Site Work, Utilities, and Retaining Walls	Characterization required by receiving facility	Contractor
Disposal of Soils Stockpiled by Others during Enabling Project Scope	Characterization required by receiving facility	Contractor

Testing paid by for the Owner shall be conducted under normal turn-around (i.e., one week turn-around). Premium costs associated with accelerated turn-around for such testing shall be borne by the Contractor.

8. For work associated with the Lump Sum Base Bid, an estimated total of approximately 28,450 cubic yards of fill and natural soil will be excavated to facilitate construction. For planning purposes, assume the following quantities of material will be excavated at the site. Actual total soil volume and volumes for each soil classification will vary.

a. approximately 15,350 cubic yards of Group I-1 natural soils defined in Section 3.2(A)(1)(a)). Group I-1 natural soils can either be reused on-site or reused at an off-site location at the Contractor's discretion.
b. approximately 4,400 cubic yards of Group I-1 fill soils (defined in Section 3.2(A)(1)(a)). Group I-1 soils can either be reused on-site or reused at an off-site location at the Contractor's discretion.
c. approximately 2,500 cubic yards of Group I-2a fill soils (defined in Section 3.2(A)(1)(b)). Group I-2a fill soils can be either reused on-site or taken to a state licensed/permitted facility (i.e., landfill daily cover) for reuse.
d. approximately 5,500 cubic yards of Group II-1 fill soils (defined in Section 3.2(A)(2)(a)). Group II-1 fill soils will require disposal at a state-license/permitted facility (i.e., landfill daily cover) for reuse.
e. approximately 700 cubic yards of Group II-3 fill soils (defined in Section 3.2(B)(3). Group II-3 fill soils will require disposal at a state licensed/permitted specialty facility (i.e. asphalt batching.)

The Contractor's Lump Sum price for work under this section shall include excavation and disposal in accordance with the Contract Documents regardless of actual total volume or soil disposal classifications. An exception to this is that additional payment will be made for soils classified as hazardous (Group III) or solid waste (Group IV) as defined in Paragraphs 3.2.C and 3.2.D of this Section, respectively. No additional payment shall be made to Contractor for actual volumes exceeding estimated volumes shown above.

9. For work associated with Unit Price scope items, an estimated total of approximately 4,750 cu. yds. of fill and natural soils will be excavated to facilitate construction. For planning purposes, assume the following quantities of material will be excavated on a unit price basis:

a. approximately 250 cubic yards of Group I-1 natural soils defined in Section 3.2(A)(1)(a)). Group I-1 natural soils can either be reused on-site or reused at an off-site location at the Contractor's discretion.
b. approximately 4,500 cubic yards of Group I-2a fill soils (defined in Section 3.2(A)(1)(b)). Group I-2a fill soils can be either reused on-site or taken to a state licensed/permitted facility (i.e., landfill daily cover) for reuse..

The volumes outlined above are approximate and will vary based on subsurface conditions encountered during construction, results of additional chemical laboratory testing, and other factors.

10. Prepare and implement an OSHA-compliant site-specific Health and Safety Plan (H&SP) to protect the health and safety of all workers (including subcontractors) engaged in activities where exposure to contaminated soil or groundwater is possible as determined by a Qualified Health Professional (QHP) retained by the Contractor. The H&SP shall also be designed to protect the general public and the environment during the course of the Work.

11. Provide monitoring required by Paragraph 1.5.B.

1.3 RELATED SECTIONS

A. Section 312000 - Earth Moving

B. Section 312333 – Trenching and Backfilling

C. Section 312400 – Building Earthwork

D. Section 312500 - Erosion and Sedimentation Controls

1.4 DEFINITIONS AND REFERENCE STANDARDS

A. Owner: University of Connecticut

B. Environmental Consultant: Authorized representatives of the Owner.

C. Contractor: Entity responsible for completing the work of this Section.

D. Soil Broker: Independent firm specializing in monitoring excavated soil management and identifying and contracting with facilities suitable for reuse of environmentally impacted soils to be engaged by the Contractor.

E. CTDEEP: Connecticut Department of Energy and Environmental Protection

F. MADEP: Massachusetts Department of Environmental Protection

G. EPA: U.S. Environmental Protection Agency

H. RSR: CTDEEP Remediation Standard Regulations

I. MCP: MADEP Massachusetts Contingency Plan

J. OSHA: Occupational Safety and Health Administration

K. PID: Photoionization detector

L. PMC: Pollutant Mobility Criteria

M. RDEC: Residential Direct Exposure Criteria

N. RSVC: Residential Soil Vapor Criteria

O. CMR: Code of Massachusetts Regulations

P. QHP: Qualified Health Professional. A person retained by the Contractor to prepare the Contractor's Health and Safety Plan (H&SP) and for quality control as specified herein.

The QHP shall have a minimum of five years experience in this work, certification as a safety professional qualified by training and experience to act in this capacity, and certification as having completed the 40 hr. OSHA health and safety training course, with current 8-hr. refresher training and 8-hr. OSHA manager's training. The QHP may assume the role of Site Health and Safety Officer.

Q. SHSO: Site Health and Safety Officer (may be the same as the QHP). A person retained by the Contractor to perform field testing for evaluation of environmental contaminants and compounds of concern in air, soil, and groundwater in accordance with the Contractor's H&SP and as directed by the QHP.

R. Polluted Soil: Soil affected by a release of a regulated substance at a concentration above the analytical detection limit for such substance but below applicable RSR criteria.

S. Polluted Fill: Soil or sediment which contained polluting substances at the time such soil or sediment was deposited as fill material.

T. Contaminated Soil: Soil affected by a known or suspect release and determined, or reasonably expected to contain substances exceeding RDEC or GA PMC.

U. Underground Storage Tank (UST): UST and associated underground piping.

1.5 QUALITY CONTROL AND ASSURANCE

A. The Environmental Consultant will monitor the Contractor’s activities associated with the Work of this Section. This monitoring will include, but not be limited to:

1. Observing and screening excavated soils from the building and tunnel with a PID as necessary to confirm that their quality is consistent with the findings of the Precharacterization Program;

2. Establishing requirements for stockpiling, segregating, and handling excavated soils from the building and tunnel if the quality of the excavated soils is not consistent with the findings of the Precharacterization Program;

3. Reviewing requests from Contractor-proposed off-site reuse, recycling, treatment, and disposal facilities for additional chemical testing of soils excavated from the building and tunnel;

4. Collecting additional soil samples for chemical testing as needed to further characterize soils excavated from the building and tunnel areas. Contractor shall provide equipment and labor needed to facilitate sample collection. Payment for additional testing shall be as specified in Paragraph 1.2.A.7 herein.

5. Confirming that the Contractor supplies the appropriate paperwork to accompany each load of excavated soil and material from the building and tunnel that is transported from the site (at the time the load leaves the site); and

6. Confirming that on-site temporary stockpiling/reuse and off-site temporary stockpiling/reuse/disposal of materials excavated from the building and tunnel is conducted in accordance with the Precharacterization Program and this Section.

B. The Contractor and their Soil Broker shall be responsible for monitoring activities described in 1.5.A for soils excavated from areas beyond the building and tunnel, including site work, utilities, and retaining walls.

C. The Contractor shall be solely responsible for exercising reasonable precaution to protect the health and safety of all on-site personnel, the general public, and the environment during the course of the Work. The Contractor shall comply with all applicable provisions of federal, state, and local health and safety and occupational health and safety statutes and codes.

D. The Contractor is required to notify all workers of the history of the site and contaminants that may be present, and to be alert for evidence of contaminated soils and groundwater. The Contractor shall notify the Environmental Consultant of the presence of potentially hazardous conditions immediately, if encountered.

E. The Contractor shall not undertake any Work until the Owner has approved the Contractor's Health and Safety Plan.

1.6 AVAILABLE INFORMATION

A. A soil Precharacterization Program was recently conducted for the project to obtain chemical test data for the soils slated for on-site reuse or off-site removal. The results of this Program are contained in the following documents: "Geotechnical Engineering Assessment and Preliminary Environmental Precharacterization Program, Proposed Science & Engineering Building, University of Connecticut, Storrs, Connecticut", prepared by Haley & Aldrich, Inc., dated February 2014 (Preliminary Pre-Characterization Report) and "Report on Environmental Precharacterization Program, Proposed Science & Engineering Building, University of Connecticut, Storrs, Connecticut", prepared by Haley & Aldrich, Inc., dated February 2015 (Precharacterization Report).

B. The chemical test data in the Preliminary Precharacterization Report and Precharacterization Report will be used for stockpile segregation, off-site disposition/reuse and on-site reuse of excavated soils. The Contractor shall review and understand the information contained in this document. The subsurface and environmental conditions information presented in this document, as applicable, are for information only and shall not be interpreted as a warranty of subsurface or environmental conditions whether interpreted from written text, boring logs, chemical test results, or other data.

C. Results of the precharacterization data indicate that some of the site fill soils and the topsoil within the planned excavation area contain compounds at levels exceeding applicable CTDEEP Residential Direct Exposure Criteria (RDEC) and Pollutant Mobility Criteria for areas with groundwater classified as GA (GA-PMC) by the CTDEEP. Refer

to the Preliminary Precharacterization Report and Precharacterization Report for additional information.

D. A review of the site history and property uses indicates that the site does not appear to be an Establishment, and is therefore not directly regulated by the CTDEEP RSRs (i.e., the site is not an Establishment, in voluntary remediation, or under a CTDEEP Order). Although the site is not subject to CTDEEP RSRs, specific attention to options for off-site disposition or on-site reuse of these materials may be necessary to comply with CTDEEP policies or other regulatory agency requirements.

E. As applicable, management of excavated soils and collected water (from all natural and manmade sources) shall be conducted in accordance with the requirements of this Section, the Preliminary Precharacterization Report and Precharacterization Report, the Contractor's approved H&SP, the State of Connecticut General Permit for the Discharge of Stormwater and Dewatering Wastewaters from Construction Activities (DEP-PERD-GP-015), the State of Connecticut General Permit for the Discharge of Groundwater Remediation Wastewater to a Sanitary Sewer, the State of Connecticut General Permit for Diversion of Remediation Wastewater, the State of Connecticut General Permit for Contaminated Soil and/or Sediment Management (Staging and Transfer), and all applicable state and federal laws and regulations.

F. If needed, the four State of Connecticut permits noted in E above will be obtained by the University of Connecticut for the New Science & Engineering Building site and the Contractor will be required to comply with the performance standards for each permit; excluding some record keeping requirements which will be handled by the Environmental Consultant and the Owner. The Contractor will be responsible for the cost of obtaining all required permits for any non University-owned site.

G. No excavated soils or materials shall leave the site without the prior approval of the Owner and Environmental Consultant. Additionally, no soils or materials shall be imported to the site without the prior approval of the Owner and Environmental Consultant.

H. If encountered, USTs, associated piping and any associated contaminated soil will be excavated and disposed of off-site in accordance with this Section. Confirmatory soil samples will be collected by the Environmental Consultant from the sidewalls and bottom of the UST excavation to confirm that all soil in excess of RSR criteria has been removed. Refer to Section 3.12 for additional guidance with regards to removal of UST systems.

1.7 SUBMITTALS

A. Off-site Temporary Stockpiling, Reuse, Recycling, Treatment, and Disposal Facilities

1. Along with the submitted bid, provide the name, address, telephone number, and contact person for the Contractor's proposed Soil Broker, each proposed off-site receiving facility or location, and each off-site temporary stockpile location to the Owner for review. This pre-bid submittal is intended to prescreen the

Contractor's proposed off-site receiving facilities and off-site temporary stockpile locations prior to the Owner awarding the Contract.

2. A minimum of 30 days prior to transport of any soils from the site, submit a letter from each Contractor-proposed receiving facility or location providing all of the information outlined below. The submittal will not be considered complete without this information. The Owner will review and approve up to two facilities for each soil group. Additional reviews will be conducted at the Contractor's expense.

   a. A statement from the facility indicating that the facility has reviewed the applicable precharacterization data and estimated soil disposal quantity information provided by the Contractor and can legally accept the material. This statement shall also include any contingencies upon which the acceptance is based.

   b. A statement from the facility indicating if additional soil quality testing is required to meet the facility's acceptance criteria, including types, numbers, and locations of tests.

   c. A copy of the facility's permit, consent order(s), and other applicable documentation under which the facility is operating that indicate the facility's testing requirements and acceptance criteria.

   d. A statement from the facility indicating the following:

      1) That the facility is operating in accordance with its permit, consent order(s), and other applicable documents.

      2) If any previous violations or complaints have been filed against the facility; and, if so, provide a brief statement describing the violation(s), how it was addressed, and its current status.

      3) Proposed use of soil or material (i.e., reuse, recycle, treatment, disposal, or other) at the facility.

      4) Description of facility-mandated quality assurance/quality control chemical sampling (QA/QC) that may be conducted on materials proposed for transport to the facility.

      5) Any limitations on soils or materials proposed for transport to the facility based on material consistency (i.e., granular soil, organic soil, or cohesive soil, debris content, slurry excavate, etc.).

      6) Whether the facility is an EPA Superfund site or part of one.

7) Remedial treatment systems that are in operation at the facility, if any.

8) If any releases have occurred at or adjacent to the site, if they have been reported to the CTDEEP, MADEP, or other applicable agencies and the status of the release.

e. For Group I facilities (defined in Section 3.2(A)(1)) other than state-regulated landfills, a statement from the facility and/or the Contractor indicating if local municipal ordinances require filing of applications for any permits relative to reuse, stockpiling, or transport of soils within the municipality of the receiving site.

f. For receiving facilities in Massachusetts, provide facility information necessary to complete Section E of MADEP Bureau of Waste Prevention Material Shipping Record and Log for each facility.

g. For facilities in states other than Massachusetts, provide a trucking manifest acceptable to the Owner unless otherwise directed by the Owner. The manifest shall include the following information, at a minimum:

1) Name and address of the construction site generating the material.

2) Name and address of the receiving facility.

3) Full waste stream description of the material being transported.

4) Truck license plate number.

5) Trailer license plate number.

6) Container number (if applicable).

7) Contractor's name, address, contact person and phone number.

8) Transporter's name, address, contact person and phone number.

9) Printed name and signature of Contractor and date that the load was completed.

10) Printed name and signature of the facility representative and date the load was received at the facility.

h. The Owner and the Environmental Consultant will review information regarding proposed receiving facilities submitted by the Contractor as detailed herein. Review of the information may take up to 14 days. The

Owner may reject a facility if the submittal process is incomplete, or if the Owner deems the proposed facility unacceptable. Reasons that a facility may be deemed unacceptable include, but are not limited to, the following: if the facility is not operated in accordance with state guidelines or a state granted permit applicable to or issued to the facility, if the facility is or is part of an EPA Superfund Site, if the facility is located on or adjacent to an aquifer or aquifer protection area, if there are unreported or outstanding releases at the site, if previous releases have not been dealt with to the satisfaction of the Owner, if the facility controls for accepting and monitoring waste are not adequate, if existing material at the site does not meet the permit or site guidelines, or any reason that may put the Owner at risk.

i. Once the submittal requirements outlined above are completed to the satisfaction of the Environmental Consultant, the Environmental Consultant will prepare a letter of acceptance for signature by the facility, the facility's Environmental Consultant, or other authorized representative of the facility. This letter, once signed and returned to the Environmental Consultant, will constitute approval of the facility for this project. The Environmental Consultant will prepare this letter within 7 days of acceptance of the facility. The Owner maintains the right to reject any proposed facility at any time in the review and acceptance process.

3. A minimum of 14 days prior to transport of any soils from the site, provide a letter stating the name and address of the transporter for each material group classification and each off-site facility as applicable. The Contractor and their Soil Broker shall prepare trucking manifests (Material Shipping Records or Uniform Hazardous Waste Manifests) for each approved Massachusetts facility within 7 days of approval of the facility. The Contractor and their Soil Broker shall prepare trucking manifests and/or other required shipping records for approved facilities in states other than Massachusetts.

4. Within 20 days of last shipment, submit copies of completed trucking manifests and Material Shipping Record & Log Forms documenting transport of excavated soils and materials from the site to approved off-site disposal, reuse, recycling, and treatment facilities. The submittal shall also include weight slips for each load transported from the site to the disposal facility.

5. For material being temporarily stockpiled off-site for later on-site reuse, provide weekly documentation of each truck departure and return. For materials temporarily stockpiled off-site for later off-site disposal, provide weekly documentation of truck departure from the site to the stockpile site and delivery to the off-site receiving facility or location. The off-site stockpile location shall be secured in a manner acceptable to the Owner, and soils of different group classifications as defined herein shall be stockpiled separately. Soil from other projects shall not be commingled with soils stockpiled off-site. The Contractor shall provide access to all temporary stockpile locations to the Owner and the Environmental Consultant for the purpose of

observing site activities and collecting environmental samples as needed to document site conditions.

B. Soil Management Plan

1. At least 30 days prior to excavation, provide a means and methods Soil Management Plan describing the Contractor's schedule, sequence, and procedures for excavation, off-site disposal of soil, on/off-site reuse of soils, and on/off-site temporary stockpiling, and other information requested by the Environmental Consultant. The narrative shall include description and accompanying scale drawing indicating the space to be used for various activities (e.g., storage for soil, space for removal of debris and conditioning of soil in preparation for reuse, etc.). Narrative shall include schedule and anticipated volume of soil generation for various activities, and schedule and anticipated location for reuse of stockpiled soils.

   a. Excess soils remaining following on-site reuse and excess soils generated during excavation shall be disposed off-site in accordance with the requirements of this Section.

   b. Unless otherwise approved by the Owner and Environmental Consultant, soils intended to be stockpiled shall be segregated and stockpiled by Group classification (in accordance with this Section) (i.e., a separate stockpile for each soil Group classification). Stockpiling shall be in compliance with CTDEEP General Permit for Contaminated Soil and/or Sediment Management (Staging and Transfer) as applicable.

   c. The Contractor shall bear all additional disposal costs (and related incidental costs) associated with commingling of various soil Groups unless such commingling is directed or approved by the Owner. In the absence of additional chemical test data, commingled soils shall default to the "highest" Group classification of soil in the stockpile with regard to off-site reuse or disposal.

2. Unless otherwise indicated by the Environmental Consultant, upon completion of earthwork activities, the Contractor shall submit a plan drawing documenting locations and depths (in elevation) where the various soil groups are reused on-site and the location and depths of the source material (as applicable). The drawing shall be submitted to the Owner and Environmental Consultant for review and approval.

C. Health and Safety Plan

1. Submit to the Owner qualifications of the QHP and SHSO. The QHP and SHSO shall have a minimum of five years experience in this work, certification as a safety professional qualified by training and experience to act in this capacity, and certification as having completed the 40 hr. OSHA health and safety training

course, with current 8-hr. refresher training and 8-hr. OSHA manager's training. The QHP may assume the role of SHSO.

2. Submit to the Owner a Health and Safety Plan prepared by the Contractor's QHP. The Health and Safety Plan shall apply to all Work to be conducted at the site, taking into consideration all workers on-site, the general public, and the environment. Training will not be provided by the Owner or the Environmental Consultant. The plan shall include the following information:

   a. A list of the Contractor's work tasks that may involve contact, excavation, and/or handling of contaminated soil and/or groundwater.

   b. Compounds of concern that may be encountered during the course of the Work and signs/symptoms of exposure.

   c. Potential for worker exposure to the compounds of concern for each work task.

   d. Requirements for OSHA training for each work task and a record or schedule for training of Contractor and subcontractor workers in the use of personal protective equipment.

   e. Work task specific levels of protection and a description of health and safety equipment including protective clothing, respiratory equipment and monitoring instruments.

   f. Procedures for containing oil and/or hazardous materials such as decontamination of heavy construction equipment and tools.

   g. Procedures for monitoring, controlling, and mitigating fugitive dust, odors, and gases for each work task to protect worker and public health and safety, including descriptions of monitoring instruments and action levels triggering responses by the Contractor (e.g., donning personal protective equipment).

   h. An Emergency Response Plan.

3. The Health and Safety Plan must be completed for discussion at the Health and Safety coordination meeting scheduled by the Contractor and held at least three days prior to commencement of work relating to possible exposure to contamination at the site. The Contractor shall provide written notice of this meeting to all interested parties at least five days before the meeting.

PART 2 - PRODUCTS

2.1 STOCKPILE/CONTAINMENT MATERIALS

A. Polyethylene: 6-mil and 20-mil thickness.

B. Jersey Barriers or other barrier systems or containers proposed by the Contractor and accepted by the Environmental Consultant for definition of work area and containment of stockpiles.

C. Temporary Fencing to secure soils at off-site temporary stockpile locations (including stockpiles at other University of Connecticut property).

D. Hay bales.

E. Silt Fence.

F. Geotextile Fabric or other system acceptable to the Owner and Environmental Consultant to be used as a marker to identify fill placed during construction.

PART 3 - EXECUTION

3.1 GENERAL

A. Conduct all Work under this and other applicable sections in accordance with all local, state, and federal regulations and Contractor health and safety protocol.

B. Excavated soil and material classified as Group I-1 (as later defined) shall be either reused on-site or at another legal off-site location at the discretion of the Contractor. Group I-1 excavated soil and material may be used off-site except as restricted by Part 3.2.A.

C. Group I-2a, I-2b, and I-3 excavated soil and material (as later defined) shall be either reused on-site or properly reused at a state-licensed facility approved by the Owner and Environmental Consultant.

D. Excavated soil and material classified as Group II, III and IV (as later defined) shall be properly reused at a state-licensed facility approved by the Owner and Environmental Consultant (no Group III or IV soil or material has been identified to date buried on-site).

3.2 CLASSIFICATION OF SOILS

A. Excavated materials shall be classified into four general groups for purposes of on-site reuse, off-site reuse, recycling, treatment, and disposal according to criteria established by applicable federal, state, and local agencies having jurisdiction over the Work. Classification is based on the results of the Preliminary Precharacterization and Precharacterization Programs. Soils may be reclassified by the Environmental Consultant during construction based on field PID screening, visual and olfactory observations. In no case shall any soil or material group be transported to residential settings, schools, playgrounds, or such similar sites unless otherwise approved by the Owner.

1. Group I: Soils that contain substances at concentrations below the applicable CTDEEP Residential Direct Exposure Criteria (RDEC).

   a. Group I-1: Naturally-deposited soils or fill soils that contain no detectable substances other than metals at or below background conditions typical for natural soils, and meet the CTDEEP RDEC, Pollutant Mobility Criteria (PMC) for areas with groundwater classified "GA" by the CTDEEP (GA-PMC), and Residential Soil Vapor Criteria (RSVC).

   b. Group I-2a: Naturally-deposited soils (Polluted Soils) or artificially-deposited fill (Polluted Fill) that contain substances at concentrations above laboratory detection limits but below CTDEEP RDEC, GA-PMC, RSVC, and that are not otherwise a hazardous waste, as specified in CTDEEP Regulations.

   c. Group I-2b: Naturally-deposited soils (Polluted Soils and Contaminated Soils) or artificially-deposited fill (Polluted Fill) that contain substances at concentrations above laboratory detection limits but below CTDEEP RDEC, GB-PMC, RSVC, and that are not otherwise a hazardous waste, as specified in CTDEEP Regulations.

   d. Group I-3: Naturally-deposited soils (Polluted Soils and Contaminated Soils) or artificially-deposited fill (Polluted Fill) that contain substances at concentrations above laboratory detection limits but below CTDEEP RDEC and RSVC, above GB-PMC, and that are not otherwise a hazardous waste, as specified in CTDEEP Regulations.

   e. Transport of Group I polluted soil/fill from the site to appropriate off-site facilities located in states other than Massachusetts shall be tracked using a trucking manifest acceptable to the Owner and prepared by the Contractor and approved by the Environmental Consultant.

   f. Transport of Group I polluted soil/fill from the site to appropriate off-site facilities located in Massachusetts shall be tracked using MADEP Material Shipping Record & Log, which will be prepared by the Environmental Consultant.

B. Group II: Polluted and Contaminated soils that contain substances at concentrations above the applicable RDEC. Unless otherwise specified, transport of Group II soils from the site to Massachusetts receiving facilities shall be tracked using a Massachusetts Department of Environmental Protection (MADEP) Bureau of Waste Site Cleanup Material Shipping Record prepared by the Environmental Consultant. For materials transported to receiving facilities in states other than Massachusetts, material shall be tracked using a trucking manifest acceptable to the Owner and Environmental Consultant. A Connecticut Special Waste Authorization may be required for off-site reuse of these soils.

1. Group II-1: Soils that meet all applicable criteria (i.e., COMM-97-001 and/or facility-specific permit requirements) for reuse as daily cover, intermediate cover, or pre-cap contouring material at Massachusetts unlined landfills; or reused at other facilities proposed by the Contractor and approved by the Owner.

2. Group II-2: Soils that meet all applicable criteria (i.e., COMM-97-001 and/or facility-specific permit requirements) for reuse as daily cover, intermediate cover, or pre-cap contouring material at Massachusetts lined landfills; or reused at other facilities proposed by the Contractor and approved by the Owner.

3. Group II-3: Soils that exceed Massachusetts landfill criteria (i.e., COMM-97-001 and/or facility-specific permit requirements), but meet all applicable criteria for asphalt batching at the proposed facility, and are not classified as a RCRA Hazardous Waste. The Contractor may propose to reuse these soils at other facilities for review and approval by the Owner.

4. Group II-4: Soils that meet all applicable criteria for reuse as daily cover, intermediate cover, or pre-cap contouring material at the Q-Park Landfill (i.e., Tire Pond); or reused at other facilities proposed by the Contractor and approved by the Owner.

5. Group II-5: Soils that require removal to regional thermal treatment facilities or out-of-state recycling facilities, and are not classified as a RCRA Hazardous Waste. The Contractor may propose to reuse these soils at other facilities for review and approval by the Owner.

6. Group II-6: Soils that require removal to regional disposal facilities, and are not classified as a RCRA Hazardous Waste. The Contractor may propose to reuse these soils at other facilities for review and approval by the Owner.

C. Group III (Hazardous Waste):

1. Group III-1: Soils determined to contain "listed" or "characteristic" hazardous waste constituents that cannot be readily treated on-site. These soils must be transported to an approved out of state RCRA Subtitle C hazardous waste disposal or treatment facility under Uniform Hazardous Waste Manifest.

2. Group III-2: Soils determined to contain "listed" or "characteristic" hazardous waste constituents that can be readily treated on-site to remove applicable leachable contaminant concentrations. Following treatment, the material will be reclassified depending on other contaminants and disposed of at a Group II-2, II-3, II-4, II-5, or II-6 facility, as applicable.

D. Group IV (Solid Waste): Debris such as paper, glass, wood, metal, timber piles, timber cribbing, steel sheeting, and miscellaneous rubble shall be disposed at CTDEEP-approved solid waste landfills or processed and recycled if possible. Pursuant to CTDEEP's Solid Waste Regulations, if greater than ten cubic yards of Solid Waste are disposed at a location, it constitutes a Solid Waste Disposal Area. If significant amounts

of Solid Waste materials are encountered in excavated materials at the site, discussion with the CTDEEP may be necessary to confirm the applicable requirements.

3.3 CLASSIFICATION OF BEDROCK

A. Based on test boring data, weathered bedrock or sound bedrock will be encountered during excavation. Bedrock at the site is assumed to contain no detectable substances other than metals at or below background concentrations (i.e., consistent with Group I-1 as defined herein). If there is evidence that a release to the environment has occurred proximate to the bedrock and subsequent bedrock testing indicates contamination, then contaminant levels will be compared to regulatory and disposal facility criteria and classified in accordance with the Group Classifications outlined in 3.2 above.

3.4 EXCAVATION

A. Excavate by methods that will permit observation of soils for the purpose of identifying, screening, testing, and segregating soils as necessary prior to off-site removal.

B. Excavate beyond the limits of proposed improvements when directed by the Owner to remove localized areas of stained soil which indicate visual, olfactory, or field screening evidence of contamination.

C. Conduct excavation to prevent cross-contamination of soil group classifications, as outlined in Section 3.2.

D. Segregate oversized and/or other deleterious materials from excavated soils prior to off-site removal as necessary to meet disposal facility acceptance criteria or as directed by the Environmental Consultant. Segregation may consist of hand labor or mechanical screeners.

E. Whenever possible, excavated soils, except those requiring additional testing or on-site reuse, shall be loaded directly onto trucks for removal to approved off-site reuse facilities.

3.5 ON-SITE REUSE OF EXCAVATED SOILS (AS APPLICABLE)

A. Backfill and fill material will be required to construct the proposed building. Site logistics and stockpiling will determine the feasibility of reusing select excavated soils as such backfill or fill material. The Contractor shall coordinate, sequence, and schedule work as required to be able to reuse specified soils on-site (as applicable).

B. Soils designated for on-site reuse shall be processed as needed to satisfy specified material requirements in other specifications sections applicable to proposed reuse and shall be protected from the elements (covered) at all times while stockpiled. Soil that becomes unusable due to the Contractor's activities shall be disposed off-site in accordance with this Section at the sole cost of the Contractor. Such activities are considered those that the Contractor undertakes (or does not undertake) which result in excavated soils not being able to be reused as compacted fill at the time the soils are

required for reuse (e.g. inadequate dewatering, failure to protect prepared surfaces, trafficking over prepared surfaces, failure to cover stockpiles, commingling, etc.)

C. Soils designated for on-site reuse to within 4 ft. of finished grade in landscaped planting areas (as shown on the Drawings) shall be processed, as necessary, to remove boulders, cobbles, gravel, rubble, or debris greater than 1-¾ in.-size and materials deleterious to plant growth except where more restrictive material requirements are specified.

D. Based on environmental considerations, and Owner approval, various soil Groups could be reused as indicated below, provided that the materials satisfy requirements of applicable specification sections.

1. Excavated soils classified as Group I-2b, I-3 and II soils may be reused in one or more of the following applications;

a. To the underside of the select backfill (i.e., base course, drainage, and utility bedding layers) beneath concrete building slabs (for soils that do not exceed RSVC);

b. To within 2 ft. below finished grade in locations where a 3-in. minimum thickness pavement (or similar barrier) is to be provided; or

c. To within 4 ft. of finished grade in landscaped areas where the final 4 ft. is constructed with soil that meets Group I-1and I-2a criteria. In planting areas (as shown on the Drawings) soils shall be free of materials deleterious to plant growth.

2. Excavated soils classified as Group I-1 and I-2a soils have no on-site reuse restrictions.

E. Unless otherwise indicated by the Environmental Consultant, the Contractor shall prepare a plan documenting locations and depths (and elevations) where Group I-2a, I-2b, I-3, and II soils are reused on-site and the location and depths of the source material (as applicable). The plan shall be submitted to the Owner and Environmental Consultant for review and approval.

3.6 TEMPORARY STOCKPILING OF EXCAVATED MATERIAL

A. Excavated soils, except those requiring additional testing or for same-day on-site reuse, shall be loaded directly onto trucks for removal to approved off-site temporary stockpiling, or permanent reuse facilities. Soils shall not be stockpiled on-site or at temporary off-site locations unless otherwise approved by the Owner and Environmental Consultant. No more than 50 cubic yards of soil may be stockpiled on site at any time.

B. Greater than 10 cubic yards of polluted or contaminated soil shall not be stockpiled off-site without a CTDEEP General Permit for Contaminated Soil and/or Sediment Management (Staging and Transfer).

C. Soils that require additional chemical testing shall be temporarily stored in stockpiles segregated by Group classification at locations proposed by the Contractor and approved by the Owner and Environmental Consultant. Soils temporarily stockpiled for later on-site reuse shall be segregated by Group classification or as otherwise directed by the Environmental Consultant.

D. The Contractor shall place Jersey barriers or other acceptable and suitable barriers around stockpiles to provide confinement. Haybales and other siltation control measures are required to prevent erosion and washing of stockpiled soils from their temporary storage locations. Place temporary fencing to secure stockpiles at off-site locations, including stockpiles at other University of Connecticut property.

E. Soils shall be stockpiled on either 20-mil polyethylene sheeting or impermeable surfaces such as asphalt. Additionally, excavated soils may be stockpiled on soils of the same group classification.

F. Stockpiles shall be securely covered with 6-mil polyethylene sheeting at the end of each workday to prevent erosion or the emission of fugitive dust, odors, and gases. Stockpiles shall be shaped and graded to facilitate surface drainage.

G. At the direction of the Owner or Environmental Consultant, materials can also be stored in containers ranging in size from 55-gallon drums to covered “roll-off” trailers.

3.7 SOIL QUALITY MONITORING DURING EXCAVATION

A. Classification of excavated soils for on-site reuse or off-site reuse, recycling, treatment, and disposal shall be based on the Precharacterization Program conducted by the Owner (referenced above) at locations where such data are available. Material located within the representative zone of the precharacterization explorations shall be assumed similar in quality to the tested material and classification is based on the test results for the representative sample, unless field screening, field observations, or additional chemical testing indicate the soils to be different from the precharacterized classification.

B. The Contractor shall coordinate all Work with the Owner and Environmental Consultant. The Environmental Consultant will monitor excavation of soils for the building and tunnel. Soils will be monitored for visual and olfactory evidence of contamination based on observed discoloration, texture, and odor. In addition, excavated material may be monitored with a PID to screen for the presence of volatile organic compounds (VOCs). Screening will occur in the excavation area (ambient) and will be periodically performed in jar sample headspace. Ambient PID readings will be performed in the Work zone and within 6 in. of the excavated material. The Contractor and their Soil Broker shall be responsible for monitoring excavated soils at other locations including excavation for site work, utilities, and site retaining walls.

C. Soils will remain as classified based on the Precharacterization Program unless field screening, field observations, or additional chemical testing indicate the soils to be different from the precharacterized classification. At the direction of the Environmental

Consultant or the Soil Broker, the Contractor shall segregate and temporarily stockpile excavated soils if they are observed to be stained, exhibit unusual odors or contain other deleterious materials. The Contractor shall arrange with the Owner and Environmental Consultant to have the soils tested and reclassified as necessary prior to off-site removal. In lieu of temporary stockpiles, the Contractor may temporarily stop earthwork activities in an area requiring reclassification, at no cost to the Owner, while additional sampling and chemical analyses are performed.

3.8 TRUCKING MANIFEST/MATERIAL SHIPPING RECORD PROCESS

A. The Contractor shall not remove any excavated soil or material from the site until the submittal process as outlined herein has been completed to the satisfaction of the Owner and Environmental Consultant.

B. The Owner or Environmental Consultant will provide interaction with the CTDEEP, MADEP or other agencies, if required.

C. The process to achieve approval at a disposal facility and prepare the required paper work may take 20 to 30 or more business days, not including the time for any additional chemical testing requested by the Contractor-proposed facility. The Contractor should be aware of this when scheduling the project.

D. For soils and/or materials transported to approved Massachusetts receiving facilities, the Contractor's Soil Broker shall provide the Contractor with the Material Shipping Record or Uniform Hazardous Waste Manifest as required. Soils shall not contain more than 20 percent asphalt, brick, concrete, wood or metal, in accordance with 310 CMR 19.017.

E. For soils and/or materials transported to receiving facilities in states other than Massachusetts, the Contractor and their Soil Broker shall prepare, maintain, and submit to the Environmental Consultant the appropriate truck manifests and shipping record(s) meeting the requirements of 1.7 unless otherwise indicated by the Owner.

3.9 TRANSPORTATION OF EXCAVATED MATERIAL

A. The Contractor and their Soil Broker shall be responsible for handling, re-handling, loading, transporting, and legal off-site removal of all excess excavated soils and materials to approved facilities.

B. No soils or materials shall be removed from the site or brought to the site without prior approval from the Owner or Environmental Consultant.

C. Excavated soils and materials removed from the site shall be loaded within the site limits. All trucks leaving the site shall be covered and cleaned of debris that might fall from the trucks during transport.

D. Install, operate, maintain and remove a wheel wash at each location where construction vehicles access and depart from the site or temporary off-site stockpile locations. The location shall be proposed by the Contractor and approved by the Owner.

E. The Contractor shall take measures to prevent debris from being spilled from trucks or tracked from the site onto local streets. The Contractor shall sweep streets adjacent to the site as necessary or as directed by the Owner.

3.10 TREATMENT OF GROUP III-2 SOILS

A. The Contractor will be responsible for handling, re-handling, loading, transporting, and legal off-site removal of all excess excavated soils and materials to approved facilities. No Group III soils have been identified at the site to date.

B. If encountered, Group III-2 soils shall be treated in-place prior to excavation. The Environmental Consultant may allow the Contractor to treat soils following excavation provided the proposed means for treatment does not result in classification of the soil as generated hazardous waste. In no case shall treatment be conducted outside the limits of the site.

C. Soils classified as hazardous waste shall be treated in accordance with the Contractor's approved treatment plan submittal.

3.11 HEALTH & SAFETY PLANNING AND IMPLEMENTATION

A. Prepare an Owner-approved Health and Safety Plan that ensures the health and safety of all workers engaged in work at the site and the general public at all times when exposure to contaminated soil, contaminated groundwater, dust, odors, or gases is possible. Implement the plan throughout the execution of the work.

B. The Contractor shall monitor the excavation using the equipment described in the Contractor's Health and Safety Plan.

C. Contractor's workers who will be engaged in work at the site that might result in exposure to contaminated soil or groundwater shall attend the health and safety coordination meeting and any follow-up supplemental briefings.

D. Provide adequate health and safety training for all personnel who may come in contact with or be exposed to contaminated materials during the course of the work.

E. Provide personnel, including personnel for subcontractors that are 40-hr. OSHA trained with an 8-hr. OSHA refresher course completed within the previous calendar year. These personnel and their training shall be provided at no additional cost to the Owner. The Contractor shall provide, at the Owner's request, certificates for each worker to demonstrate compliance with this requirement.

F. As necessary, provide personnel, including personnel for subcontractors, that are confined space entry trained to complete the Work specified herein and in other Sections. These personnel shall be current in all applicable and necessary refresher courses as well. These personnel and their training shall be provided at no additional cost to the Owner.

The Contractor shall provide, at the Owner's request, certificates for each worker to demonstrate compliance with this requirement.

G. Personnel who have not received training, and who are not equipped with the required protective clothing and equipment, shall not be permitted access to the site by the Contractor during the course of the work that may result in exposure to contaminated soil or groundwater.

3.12 CONTINGENCIES

A. If potentially hazardous conditions develop during the course of the Work, the Work in that specific area shall be terminated until the hazardous condition has been addressed to the Environmental Consultant and Owner's satisfaction. Potentially hazardous conditions include, but are not limited to, encountering buried containers, tanks, or drums.

B. In the event that buried containers, drums or tanks are encountered or if a release of oil or potentially hazardous materials has occurred, the Contractor shall notify the Environmental Consultant and Owner immediately. The Contractor shall secure the area to prevent health risks to workers or the public and releases into the environment. The sources of the event causing the material to be considered suspect will be evaluated by the Environmental Consultant and Owner. The Contractor shall notify the City Fire Department or CTDEEP, as required, upon discovery of the tank or buried container. The Contractor shall obtain permission for removal of buried storage tanks. Refer to the attached CTDEEP UST environmental program fact sheets for additional guidance.

C. The impact on the Work should be evaluated and, if necessary, the Contractor's Health and Safety Program should be revised in response to the unforeseen conditions.

3.13 DEWATERING AND SEDIMENT CONTROL

A. Prepare an Owner-approved Health and Safety Plan that ensures the health and safety of all workers engaged in work at the site and the general public at all times when exposure to contaminated soil, contaminated groundwater, dust, odors, or gases is possible. Implement the plan throughout the execution of the work.

B. General:

1. Manage and treat dewatering effluent as necessary in order to meet the requirements of the permit(s). The Contractor shall comply with the most stringent criteria and requirements set forth by regulatory agencies.

2. Maintain total suspended solids (i.e., turbidity), pH, and other contaminants within permit requirements through the use of sedimentation tanks, bag filters (or combination thereof) and pH control systems. The number of sedimentation tanks (or other filters and control systems) and their size shall accommodate the anticipated dewatering rates as estimated by the Contractor. The tanks shall be periodically inspected and cleaned of accumulated sediment.

3. If dewatering is required for remediation, building or utility demolition, the water generated during dewatering operations shall undergo on-site primary treatment to remove suspended solids by a system designed and installed by the Contractor, and discharged to the local sewer if the CTDEEP and local POTW discharge requirements can be achieved. If the discharge parameters cannot be achieved through on-site primary treatment, the water shall undergo on-site secondary treatment or be transported off-site for disposal, recycling, or treatment.

4. Primary treatment of dewatering effluent is defined as removal of suspended sediments to levels that do not exceed CTDEEP or local POTW discharge criteria. Typical primary treatment methods include, but are not limited to: frac-tanks, lined retention ponds, bag filters and flocculants. Primary treatment of dewatering effluent is part of the base bid. Secondary treatment of dewatering effluent is defined as removal of dissolved contaminants and/ or free product. Secondary treatment, if required, will be performed at the unit cost outlined in Part 4.

5. Free product (oil) has not been encountered at the site to date. However if free product is encountered during performance of the work, it shall be collected in a holding tank (or other approved vessel) and transported off-site for disposal or recycling in accordance with applicable Hazardous Waste or Connecticut-Regulated Special Waste disposal regulations.

6. The Contractor shall undertake the following:

   a. Design and operate dewatering systems, including treatment if necessary.

   b. Prevent erosion or sedimentation from stockpiled material or other contraction areas.

   c. Install a flow meter and sample collection valve near system discharge point.

   d. Implement dewatering system modifications as necessary in order to comply with CTDEEP Permit requirements.

7. The Owner shall obtain all necessary treatment and discharge permits including the CTDEEP General Permit for the Discharge of Groundwater Remediation Wastewater to a Sanitary Sewer.

8. The Environmental Consultant will conduct sampling and analysis of dewatering effluent and compare test results with permit requirements. If required, Environmental Consultant will report permit violations to the Owner, Contractor and CTDEEP.

9. Refer to Section 312500 (Erosion and Sedimentation Controls) and Section 312000 (Earth Moving) for additional details and requirements.

3.14 ODOR CONTROL

A. The control of odor during all phases of work shall be the sole responsibility of the Contractor. Nuisance levels of odors shall not be exceeded at any time during the work. Contractor shall control odors such that odors do not present a nuisance beyond site boundaries.

B. If odor is noticeable as determined by the Owner or the Environmental Consultant, the Contractor shall be required to immediately develop alternate work practices to reduce odors. The alternate work practices shall be immediately presented to the Environmental Consultant for review and comment so as not to delay the work. The agreed-upon plan will then be documented in written form and submitted to the Environmental Consultant for record.

C. Exposed side slopes or soil stockpiles that exhibit visible contamination or staining and are generating odor as determined by the Owner or Environmental Consultant shall be covered with 10-mil polyethylene sheeting to minimize migration of odors off site.

PART 4 - MEASUREMENT AND PAYMENT

4.1 MEASUREMENT

A. The costs provided by the Contractor shall include all costs for submittals; transporting; stockpiling (on and/or off-site); temporary stockpiling of excavated soils; on-site reuse; off-site reuse, recycling, treatment, and disposal; coordinating with the Environmental Consultant and Owner; preparing and providing required documentation (letters to and from facilities); laboratory chemical testing as specified herein; equipment (e.g., excavators and/or drill rigs) to enable sampling for additional testing; permit preparation and filing fees; Soil Broker services; and other incidental work to remove excavated soils and materials from the site.

B. No separate measurement or payment will be made for handling, re-handling, screening and segregation of materials and soils by hand or mechanical means, reuse, filling, construction vehicle wheel wash, management, stockpiling (on or off-site), permit preparation and filing, emission control measures, equipment, police details, dust monitoring, dust control, surveying, contractor confirmatory chemical testing of treated Group III-2 soils, Work listed in other Sections or other associated items or Work considered incidental to the Work of this Section.

C. No separate measurement and payment will be made for removal and disposal of demolished existing concrete floor slabs, demolished existing reinforced concrete foundation elements, and pavements located at ground surface. Removal and disposal of these materials shall be part of the Base Contract Price.

D. No separate measurement and payment will be made for Health and Safety. The Base Contract Price shall include furnishing all material, mobilization, OSHA trained and certified labor, confined space trained and certified labor, equipment, tools,

subcontractors and testing agencies associated with on-site monitoring programs, and incidentals necessary to complete the Work specified herein.

E. Contractor costs shall include all Work required by the disposal facility to accept the material, including Work to reduce the size and volume of the debris (e.g., hoe-ramming concrete to a size acceptable for trucking and/or for the disposal facility) and screening.

F. For work performed on a unit price basis, measurement of the material groups transported from the site to the various receiving facilities shall be per ton measured by scale at the receiving facility to the nearest 0.1-ton. If the receiving facility does not have a scale, the weight per truck load and percent the truck is filled shall be agreed upon by the Contractor and Environmental Consultant PRIOR to each truck leaving the site. The basis for the weight per truck shall be the weight of the initial trucks leaving the site that are weighed by the Contractor and agreed to by the Environmental Consultant. Prior to hauling, up to five trucks (for each truck type and for each material type (e.g., fill, organic soils, sand, clay, glacial soils, bedrock, etc.)) shall be weighed to determine the agreed on weight for each load. Up to 5 percent of subsequent trucks shall be weighed by the Contractor at the request of the Environmental Consultant. This process shall be applicable to other group classifications that are not weighed at the end destination.

G. No separate measurement or payment will be made for dewatering and sediment control (i.e., primary treatment) as outlined in 3.13(B).

H. Monitoring, metering and disposal of water from the site into the Water Pollution Control Authority sewer is the responsibility of the Contractor. The Owner will obtain a General Permit for Remediation Wastewater to a Sanitary Sewer. The Contractor shall be responsible for managing dewatering effluent in a manner satisfying permit requirements. The contractor's lump sum price shall include costs for primary treatment (such as use of fractionization tanks) to control turbidity and total suspended solids. If secondary treatment (such as absorbent pads or an oil/water separator to control oil, or carbon filters to control volatile organic compounds) will be required as directed by the Owner, the Contractor will be reimbursed in accordance with the applicable Contract unit price.

END OF SECTION

PART 1 – GENERAL

1.01 DESCRIPTION

A. Work Included: Controlling sedimentation and erosion as shown on the Drawings and as specified.

B. Related Sections:

1. Section 31 20 00 – Earth Moving;

2. Section 31 23 33 – Trenching and Backfilling.

1.02 REFERENCES

A. Wherever reference is made to the DOT Specifications, it shall mean the Connecticut Department of Transportation Standard Specifications for Roads, Bridges, and Incidental Construction Form 816 (2004) as modified by Supplemental Specifications issued by the Connecticut Department of Transportation.

PART 2 – PRODUCTS

2.01 HAY BALES AND STAKES

A. Hay Bales: Forty pounds minimum weight and 120 pounds maximum weight.

B. Wood Stakes:

1. Two (2) per bale for securing bales.

2. Sizes: As shown on the Drawings.

2.02 MATERIALS FOR SILT FENCE

A. Filter Fabric; Filter Cloth:

1. Subarticle M.08.01-26, DOT Specifications.

2. Obtain manufacturer's certification that filter fabric conforms to the requirements of these Specifications.

3. Obtain the filter fabric from a manufacturer who produces the material for use in silt fences and who has a design for that use.

4. Do not use fabric susceptible to deterioration in sunlight.

5. Submit 2-foot square sample and technical data sheet for acceptance by the Owner.

6. Submit manufacturer's installation instructions for acceptance by the Owner.

B. Posts or Other Suitable Mounting:

1. Lengths of wood posts: As shown on the Drawings. Cross-section dimensions: As recommended by filter fabric manufacturer.

2. Other Suitable Mounting: As recommended by the manufacturer.

C. Provide materials as required by the manufacturer for attaching fabric to posts.

2.03 MATERIALS FOR ANTI-TRACKING PAD

A. Crushed Stone: Sound, tough and durable; free from soft, thin, elongated or laminated pieces and vegetable or other deleterious substances. Grading: Article M.01.01, DOT Specifications No. 4.

B. Filter Cloth: Subarticle M.08.01-26, DOT Specifications.

2.04 EROSION-CONTROL BLANKETS

A. Biodegradable wood excelsior, straw, or coconut-fiber mat enclosed in a photodegradable plastic mesh. Include manufacturer's recommended steel wire staples, 6 inches long.

PART 3 – EXECUTION

3.01 PLACING HAY BALES

A. Place hay bales at slopes, at catch basins and at other locations as shown on the Drawings.

B. Embed hay bales to a depth of 6 inches.

C. Drive stakes through hay bales into ground to secure hay bales.

D. Place and stake hay bales at all locations as necessary to intercept and to filter overland stormwater flows before these flows enter streams or ponds.

E. Whenever pumping water from excavations, discharge the water such that it passes through hay bales before entering a storm drain or water body.

F. Remove accumulated sediment and replace bales when system becomes clogged or when directed by the Owner.

G. Remove hay bales at completion of project unless the Owner directs otherwise.

3.02 CONSTRUCTION AND MAINTENANCE OF SILT FENCES

A. Construct silt fences as shown on the Drawings.

B. Construct silt fences in accordance with manufacturer's instructions as accepted by the Owner.

C. Maintain or replace silt fences until they are no longer necessary or as ordered by the Owner.

D. Remove silt fences at completion of project unless the Owner directs otherwise.

3.03 CONSTRUCTION AND MAINTENANCE OF ANTI-TRACKING PAD

A. Construct anti-tracking pad at location shown on the Drawings.

B. Excavate to length, width and depth dimensions as shown on the Drawings.

C. Place filter cloth on excavated subgrade.

D. Place crushed stone on filter cloth to depth as shown on the Drawings.

E. Maintain the entrance in a condition that will prevent tracking or flowing of sediment onto the public right-of-way. When necessary, increase thickness by adding additional crushed stone; or increase length by excavating to subgrade and placing additional filter cloth and crushed stone; or do both in order to prevent tracking or flowing of sediment. Immediately remove all sediment spilled, dropped, washed or tracked onto the public right-of-way.

F. Remove anti-tracking pad at completion of project unless the Architect directs otherwise or at a time when permanent access can be constructed.

3.04 CONSTRUCTION OF EROSION CONTROL BLANKETS

A. Protect seeded areas with slopes exceeding 1V:3H or as indicated on the plans with erosion-control blankets installed and stapled according to manufacturer's written instructions.

3.05 COMPLIANCE WITH GUIDELINES AND PERMITS

A. The Contractor shall review the CTDEP guidelines (Connecticut Guidelines for Soil Erosion and Sediment Control), and the requirements of the General Permit for the Discharge of Stormwater and Dewatering Wastewaters Associated with Construction Activities prior to any site disturbance.

B. Inspection shall be performed in accordance with the General Permit as directly cited below:

1. "Qualified personnel (provided by the permittee) shall inspect disturbed areas of the construction activity that have not been finally stabilized, structural control measures, and locations where vehicles enter or exit the site at least once every seven calendar days and within 24 hours of the end of a storm that is 0.1 inches or greater. Where sites

have been temporarily or finally stabilized, such inspection shall be conducted at least once every month for three months."

2. "Disturbed areas used for storage of materials that are exposed to precipitation shall be inspected for evidence of, or the potential for, pollutants entering the drainage system. Erosion and sediment control measures shall be observed to ensure that they are operating correctly. Where discharge locations or points are assessable, they shall be inspected to ascertain whether erosion control measures are effective in preventing significant impacts to receiving waters. Locations where vehicles enter or exit the site shall be inspected for evidence of off-site sediment tracking."

3. "Based on the results of the inspection, the description of the potential sources and pollution prevention measures identified in the Plan shall be revised as appropriate as soon as practicable after such inspection. Such modification shall provide for timely implementation of any changes to the site within 24 hours and implementation of any changes to the Plan within three calendar days following the inspection. The plan shall be revised and the site controls updated in accordance with the General Permit."

C. Stormwater runoff shall be directed away from disturbed areas whenever possible by the use of temporary berms, swales hay bales or silt fence.

D. In areas where more than 2 acres will be disturbed, sediment traps or other controls will be constructed in accordance with the guidelines.

E. For discharge points that serve an area with more than 5 disturbed acres at one time, a sediment basin, designed in accordance with the guidelines, shall be installed and shall provide a minimum of 134 cubic yards of water storage per acre drained. The sediment basin shall be maintained until final stabilization of the contributing area. This requirement shall not apply to flows from off-site areas and flows from the site that are either undisturbed or have undergone final stabilization where such flows are diverted around the sediment basin. Outlet structures from sedimentation basins shall not encroach upon a wetland.

F. The Owner or its representative may require additional controls, as they are deemed necessary due to construction phasing, weather conditions, or other unforeseen conditions that cause excessive soil erosion or sedimentation.

END OF SECTION

PART 1 - GENERAL

1.01 DESCRIPTION

A. Work Included: Bituminous concrete drives, parking, and patching, complete in place, as shown on the Drawings and as specified herein including:

1. Saw cut existing pavement as required.

2. Painted pavement markings and legends.

3. Maintenance and protection of pedestrian traffic as required.

B. Related Sections:

1. Section 31 20 00 – Earth Moving;

2. Section 31 25 13 – Erosion and Sedimentation Controls;

3. Section 33 10 00 – Water Utilities;

4. Section 33 30 00 – Sanitary Sewerage Utilities;

5. Section 33 40 00 – Storm Drainage Utilities.

1.02 QUALITY ASSURANCE

A. Qualifications of Workmen

1. Provide at least one person who shall be thoroughly trained and experienced in the skills required, who shall be completely familiar with the design and application of work described for this Section, and who shall be present at all times during progress of the work of this Section and shall direct all work performed under this Section.

2. For actual finishing of bituminous concrete surfaces and operation of the required equipment, use only personnel who are thoroughly trained and experienced in the skills required.

1.03 REFERENCES

A. Wherever reference is made to the DOT Specifications, it shall mean the Connecticut Department of Transportation Standard Specifications for Roads, Bridges and Incidental Construction Form 816 (2004) as modified by Supplemental Specifications issued by the Connecticut Department of Transportation.

PART 2 - PRODUCTS

2.01 MATERIALS

A. Subbase crusher-run stone conforming to the requirements of Article M.01.01, for No. 6 stone (3/8" crushed stone), DOT Specifications or to the following:

Sieve Size	Percent Passing
3.5"	100
¾"	50-100
No. 4	25-75

The fraction, passing the No.4 sieve shall have less than 15% passing the No. 200 sieve.

B. Base: Processed aggregate for the base shall conform to the requirements of Article M.05.01, DOT Specifications. Coarse Aggregate shall be broken stone conforming to the requirements of Article M.05.01-2 (b).

C. Pavement Materials:

1. Bituminous concrete mixtures conforming to the requirements of Section M.04 of the DOT Specifications.

2. In Section M.04, reference is made to the Chief, Materials Testing Section, to the Materials Testing Section, and to the Laboratory; none will be involved in this work. Do the work of the Chief, the Section, and the Laboratory; or arrange for the producer of the bituminous concrete to do this work. Make the determinations, verifications, rejections, approvals, tests, and inspections as specified by Section M.04 and as necessary to produce satisfactory bituminous mixtures.

D. Tack Coat: Section M.04 of the DOT Specifications.

E. Joint Sealer: A rubber compound of the hot-poured type conforming to the requirements of Article M.04.02 of the DOT Specifications.

F. Paint: Shall conform to Section M.07.21 of the DOT Specifications for Hot Applied Pavement Marking Paint.

PART 3 - EXECUTION

3.01 INSPECTION

A. Examine the areas and conditions under which work of this Section will be installed. Correct conditions detrimental to proper and timely completion of the Work. Do not proceed until unsatisfactory conditions have been corrected.

3.02 FINAL PREPARATION OF SUBGRADE

A. After preparation of subgrade as specified in Section 31 20 00 – Earth Moving of these Specifications, thoroughly scarify and sprinkle the entire area to be paved, and then compact by rolling to a smooth, hard, even surface of 95 percent of modified optimum density to receive subbase. Finish to the required grades, with due allowance for the thickness of bituminous concrete courses to be placed thereon.

B. Equipment: Compact by rolling with a 15-Ton vibratory roller.

3.03 CONSTRUCTION OF SUBBASE AND BASE COURSE

A. After subgrade has been completed and accepted by the Architect, construct the subbase and base over all areas to be paved.

B. Construct subbase in accordance with the requirements of Article 2.12.03 of the DOT Specifications, however compact with four passes of a 15-Ton (static weight) roller.

C. Construct base in accordance with the applicable requirements of Article 3.04.03 of the DOT Specifications. Compact to at least 98 percent of modified optimum density.

3.04 CONSTRUCTION OF BITUMINOUS CONCRETE PAVEMENT

A. Construct pavement in courses as called for on the Drawings. Use a class of bituminous concrete for each course as indicated on the Drawings. Thickness of each course: As shown on the Drawings.

B. Construct the bituminous concrete pavement in accordance with Article 4.06.03 of the DOT Specifications, except as modified below:

1. Article 4.06.03-1 Samples: Samples will not be taken by Materials Testing Section. Arrange for the producing plant to take its own samples to ascertain that mixtures are proper. Provide certifications. The Contractor will have the ultimate responsibility.

2. Article 4.06.03-2 Mixing Plant Inspection:

   a. Inspections, verifications, determinations, and approvals at the mixing plants will not be made by the Chief, Materials Testing Section. The Contractor will be responsible for mixtures and shall take whatever steps are required to ensure production of satisfactory mixtures. He shall certify that mixtures do meet specifications.

   b. Weights of completed mixtures will not be required.

3. Article 4.06.03-3 Mixing Plant Inspection - Field Laboratory: Delete in its entirety.

4. Article 4.06.03-4: Delete "Assistant Manager of Materials Testing" and substitute "Contractor."

5. Article 4.06.03-5: Delete "Assistant Manager of Materials Testing" wherever it appears and substitute "Contractor."

C. Certifications: Furnish certified test reports, material certificates, and certificates of compliance in accordance with the requirements of Article 1.06.07 of the DOT Specifications.

3.05 APPLICATION OF PAINTED PAVEMENT MARKINGS AND LEGENDS

A. The contractor shall furnish a technical advisor, who shall be fully knowledgeable of all equipment operations and application techniques, to oversee the project operation.

B. Pavement markings shall be applied in accordance with the details shown on the Drawings, in accordance with Section 12.09 of the DOT Specifications and as directed by the Architect.

C. The road surface shall be cleaned to the satisfaction of the Architect just prior to application. Pavement cleaning shall consist of at least brushing with a rotary broom (non-metallic), and additionally as recommended by the material manufacturer and acceptable to the Architect.

D. The painted pavement markings application shall immediately follow the pavement cleaning. Operations shall be conducted only when the pavement surface temperatures are 50°F or greater.

E. After application the paint shall be protected from crossing vehicles and pedestrians for a time at least equivalent to the drying time of the paint.

F. The contractor shall place necessary "spotting" at appropriate points to provide horizontal control for striping and to determine necessary starting and cutoff points. Longitudinal joints, pavement edge and existing markings shall serve as horizontal control when so directed.

3.06 PROTECTION

A. Protect from traffic during all operations.

3.07 FINISH TOLERANCES

A. Finish surfaces to the following tolerances.

1. Subbase and Base: Plus 0.00 feet to minus 0.10 feet from line and grade shown on the Drawings.

2. Bituminous Concrete Surface Course: Plus or minus 0.05 feet at any point from line and grade shown on the Drawings. No variations in surface more than 1/8 inch in a 10-foot plane.

END OF SECTION

PART 1 – GENERAL

1.01 DESCRIPTION

A. Work Included: Portland cement concrete sidewalks, utility pads and dumpster pads, complete in place, as shown on the Drawings and as specified.

B. Related Work Specified Elsewhere

1. Section 31 20 00 – Earth Moving;

2. Section 32 12 16 – Asphalt Paving.

1.02 QUALITY ASSURANCE

A. Qualifications of Workmen

1. Provide at least one person who shall be thoroughly trained and experienced in the skills required, who shall be completely familiar with the design and application of work described for this Section, and who shall be present at all times during progress of the work of this Section and shall direct all work performed under this Section.

2. For actual finishing of concrete surfaces and operation of the required equipment, use only personnel who are thoroughly trained and experienced in the skills required.

1.03 APPLICABLE SPECIFICATIONS

A. Wherever reference is made to the DOT Specifications, it shall mean the Connecticut Department of Transportation Standard Specifications for Roads, Bridges and Incidental Construction Form 816 (2004) as modified by Supplemental Specifications issued by the Connecticut Department of Transportation.

PART 2 – PRODUCTS

2.01 MATERIALS

A. Concrete: Article M.03.01, DOT Specifications. Class 'F', 4500 psi.

B. Air-Entraining Portland Cement and Air-Entraining Admixture: Article M.03.01, DOT Specifications.

C. Reinforcement:
1. Welded Wire Mesh: WWM shall be used in all concrete sidewalk ramps and concrete sidewalk locations. The WWM shall be W1.4xW1.4 and conform to the latest AASHTO M55M/M55-94 "Standard Specifications for Welded Steel Wire Fabric for Concrete Reinforcement."

2. Written request may be made to substitute synthetic:

100% virgin polypropylene fibers, minimum 1.5lbs per cubic yard or as approved by the manufacturer. Acceptable manufacturers of polypropylene fibers are W.R. Grace, Fibermesh, and Forta Corp.

D. Granular for Base: Article M.02.01, DOT Specifications.

E. Expansion Joint Filler: For installation at expansion joints: Bituminous cellular type, AASHTO M213.

F. Salt Guard: Per Connecticut DOT Qualified Product List.

G. Dowels: AASHTO M31-92, Grade 60. All smooth metal dowels shall be 5/8" diameter and 18" in length.

PART 3 – EXECUTION

3.01 INSPECTION

A. Examine the areas and conditions under which work of this Section will be installed. Correct conditions detrimental to proper and timely completion of the Work. Do not proceed until unsatisfactory conditions have been corrected.

3.02 CONSTRUCTION METHODS

A. Conform to the requirements of Article 9.21.03 of the DOT Specifications.

B. Install expansion joint filler at expansion joints located as shown on the Drawings.

END OF SECTION

SECTION 321443 - PERMEABLE CLAY BRICK PAVER

PART 1- GENERAL

1.1 RELATED DOCUMENTS

A. Drawings and general provisions of the Contract, including General and Supplementary Conditions and Division 01 Specification Sections, apply to this Section.

B. LEED BUILDING GENERAL REQUIREMENTS:

1. Implement practices and procedures to meet the project's environmental goals, which include achieving a LEED™ 2009 New Construction Silver rating. Specific project goals which may impact this and the other sections of this specification include: use of recycled-content materials; use of locally-manufactured materials; use of low-emitting materials; use of certified wood products; construction waste recycling; and the implementation of a construction indoor air quality management plan. Ensure that the requirements related to these goals, as defined in this Section and other Sections of the contract documents, are implemented to the fullest extent. Substitutions or other changes to the work shall not be allowed if such changes substantially compromise the stated LEED Building criteria.
2. Comply with LEED (Leadership in Energy and Environmental Design) Green Building Rating System BD+C, Version 3, Silver.

1.2 DESCRIPTION OF WORK

A. Provide labor, materials, equipment, services and transportation to complete work.

1. Permeable clay brick pavers on Stone bedding material, over Open-graded base material and Open-graded sub base material
2. Metal Edging at Unit Pavement

1.3 REFERENCES

A. American Society for Testing and Materials
1. ASTM C67 Standard Test Methods for Sampling and Testing Brick and Structural Clay Tile
2. ASTM C136 Standard Test Method for Sieve Analysis of Fine and Coarse Aggregates
3. ASTM C448 Standard Classification for Sizes of Aggregate for Road and Bridge Construction
4. ASTM C902 Standard Specification for Pedestrian and Light Traffic Paving Brick
5. ASTM C1272 Standard Specification for Heavy Vehicular Paving Brick

1.3 SUBMITTALS

A. Permeable Clay Brick Pavers: Provided by Contractor
   1. Submit manufacturer's product literature and material safety data sheets.
   2. Submit sample units of each paver type representative of size, shape, color and finish, indicating color variation and texture range expected in finished installation. Blend of colors from manufacturer's standard color palette as shown on the drawings and in the specifications.
   3. Submit test results from approved independent testing laboratory indicating ASTM C1272 compliance.
   4. Submit manufacturer's certification of compliance to appropriate ASTM standard.

B. Bedding material, Open-graded Base and Sub Base material
   1. Submit sieve analysis results in accordance with ASTM C136 for jointing, bedding, base and sub-base material.
   2. Provide supplier name, source and types of material used for jointing, bedding, base and sub base.
   3. Provide color sample of joint filler for approval before delivery to site.

C. Paving Installer
   1. Job references from projects similar in size and design to this project. Provide Owner names, postal address, phone, fax and email address.

D. Sample Panels
   1. Install a 5 ft by 5 ft area of pavers on a prepared substrate including detail to illustrate component application including pattern and edge details.
   2. Use mock-up to determine pre-compaction setting bed level, joint sizes, lines, laying patterns and product color.
   3. Do not start work until mock-up has been approved by Owner.
   4. Approved mock-up is the standard by which appearance, workmanship, substrate preparation and material application will be judged.
   5. Approved field sample may be retained as part of finished work. Remove mock-up and dispose of materials when directed by Owner.

1.4 QUALITY ASSURANCE

A. Paving Installer Qualifications
   1. Three years experience with at least 25,000 feet of segmental permeable pavers installed.
   2. Successful completion of five permeable paver installations similar in design, material and extent indicated on this project.
   3. Successful completion of a permeable paving installation certificate course.

1.5 DELIVERY, STORAGE AND HANDLING

A. Delivery
   1. Deliver materials in original, unopened, undamaged packaging with identification labels intact. Unload pavers with proper equipment so no damage occurs to pavers.

C. Storage

1. Store materials so they are protected from contamination by foreign substances and excessive moisture.
2. Store pavers to prevent damage and staining.

1.6 PROJECT CONDITIONS

A. Environmental Requirements
1. Do not install in rain or snow.
2. Do not install frozen bedding material.

PART 2 - PRODUCTS

2.1 PERMEABLE CLAY BRICK PAVERS; PROVIDED BY OWNER

A. Permeable Paver Type
1. 4x8x2 1/4" Permeable
a. Manufactured by The Whitacre Greer Company, 1400 South Mahoning Ave, Alliance, OH 44601 Telephone: (800) 947-2837 Fax: (330) 823-5502 Email: info@wgpaver.com
b. Or Approved Equal
2. Material standard in accordance with ASTM C1272 as applicable.
3. Classification: Specify weathering, traffic and application classifications.
a. Specify Class: SX
b. Specify Type: F
c. Specify Application: PS
4. Pattern: Herringbone
5. Color:
a. Type 1: (52) Majestic
b. Type 2:
i. 50% (52) Majestic
ii. 35% (53) Cimmerean
iii. 15% (56) Desert Grey

2.2 AGGREGATE MATERIALS

A. Bedding Course and Joint Filler
1. #9 or #89 Crushed stone conforming to ASTM D448
2. Washed with less than 1% passing through the No. 200 sieve.

ASTM No. 9		ASTM No. 89	
Sieve Size	Percent Passing	Seive Size	Percent Passing

9.5 mm (3/8 in.)	100	12.5 mm (1/2 in.)	100
4.75 mm (No. 4)	85 to 100	9.5 mm (3/8 in.)	90 to 100
2.36 mm (No. 8)	10 to 40	4.75 mm (No. 4)	20 to 55
1.18 mm (No. 16)	0 to 10	2.36 mm (No. 8)	5 to 30
300 mm (No. 50)	0 to 5	1.18 mm (No. 16)	0 to 10
		300 mm (No. 50)	0 to 5

B. Base Course
   1. #57 Crushed stone conforming to ASTM D448
   2. Washed with less than 1% passing through the No. 200 sieve.

ASTM No. 57

Sieve Size	Percent Passing
37.5 mm (1-1/2 in.)	100
25.0 mm (1 in.)	95 to 100
19.0 mm (3/4 in.)	
12.5 mm (1/2 in.)	25 to 60
9.5 mm (3/8 in.)	
4.75 mm (No. 4)	0 to 10
2.36 mm (No. 8)	0 to 5

C. Sub Base Course
   1. #2 Crushed stone conforming to ASTM D448
   2. Washed with less than 1% passing through the No. 200 sieve.

ASTM No. 2

Sieve Size	Percent Passing
75 mm (3 in.)	100
63 mm (2-1/2 in.)	90 to 100
50 mm (2 in.)	35 to 70
37.5 mm (1-1/2 in.)	0 to 15
25.0 mm (1 in.)	
19.0 mm (3/4 in.)	0 to 5

2.2 METAL EDGING AT UNIT PAVERS
1. Steel shapes, plates and bars: ASTM A36
2. Steel pipe: schedule 80 seamless steel ASTM A53 or A120.
3. Hardware: galvanized

PART 3 - EXECUTION

3.1 PREPARATION

A. Verify Site Conditions
    1. General contractor shall inspect and certify in writing to installer that site conditions meet the following prior to installation of permeable clay pavers.
        a. Remove organic, unstable or unconsolidated material from the site.
        b. Verify conformance of sub grade preparation and elevations to specified requirements. If CBR (California Bearing Ratio) is less than 5%, typically with clay soils, compaction of sub grade and geotextile may be required.
        c. Verify sub base and base conformance to specified requirements. Do not use setting bed material to correct deficiencies in base course surface.
        d. Verify written density test results for soil sub grade and sub base course.
        e. Verify type, location and elevations of edge restraints, utility structures and drainage inlets.
        f. Verify that the subbase course is ready to support bedding material, permeable pavers and imposed loads.
    2. Do not proceed with bedding course or paver installation until satisfactory sub base are verified by contractor.
    3. Verify that the area is free from standing water and certified by general contractor as meeting material, installation and grade specifications.
    4. Field measurements
        a. Determine actual paver dimensions (including tolerances) and coordinate with dimensions for pavement areas indicated on contract drawings prior to any pavement installation. Adjust pavement area dimensions to eliminate unnecessary paver cutting.
B. Aggregate Material
    1. Stockpile joint filler material, base and sub base material such that they are free from standing water, uniformly graded, free of organic mater or sediment, debris, and ready for placement.

3.2 INSTALLATION

A. General
    1. Keep area where pavement is to be constructed free from sediment during entire job. Contaminated sub base, base or bedding material shall be removed and replaced with clean material.
    2. Do not damage drainpipes, overflow pipes, observation wells or any inlets and other drainage elements during installation. Report damage to project engineer.
B. Sub Base Aggregate
    1. Spread and compact moistened No. 2 sub base in 4 to 6 inch lifts.
        a. Typical sub base thickness is 6 to 18 inches.
        b. Reduce the depth of each lift if plate tamper is used for compaction.
    2. Make at least two passes in the vibratory mode then at least two in the static mode for each lift. A minimum 10-ton vibratory roller should be used. Compact until there is no visible movement of the No. 2 stone.
        a. A plate tamper with 13,500 Lbf may be used for smaller installations.
    3. Surface tolerance of No. 2 sub base shale be +/-3/4 inches over a 10-foot straightedge.
C. Base Aggregate
    1. Spread and compact moistened No. 57 base in one 4-inch lift.

        a. Spread in multiple reduced-depth lifts if plate tamper is used for compaction.
    2. Make at least two passes in the vibratory mode then at least two in the static mode for each list. A minimum 10-ton vibratory roller should be used. Compact until there is no visible movement of the No. 57 stone.
        a. A plate tamper with 13,500 Lbf may be used for smaller installations.
    3. Surface tolerance of No. 57 base shale be +/-1/2 inch over a 10-foot straightedge.

D. Bedding Course Aggregate
    1. Spread and screed moistened No. [9][89] stone bedding material.
    2. Fill voids left by removing screed rails with No. [9][89] stone.
    3. Surface tolerance of No. [9][89] bedding course shall be +/-1/8 inch over a 10-foot straightedge.
    4. Do not compact bedding course.
    5. Keep pedestrian and vehicular traffic off screeded bedding course until paver installation begins.

E. Permeable Clay Pavers
    1. Install paving units in pattern(s) indicated on drawings. Maintain straight pattern lines using string and/or chalk lines.
        a. Maximum bond line variation shall be +/-3/8 inch over a 50-foot string line.
    2. Fill gaps at the edges of the paved area with cut unites. Cut pavers subject to vehicular traffic shall be no smaller than 1/3 of a whole unit.

F. Joint Material
    1. Fill openings and joints between paver units with No. 9 or 89 stone.
    2. Joint Material Color to match brick color
    3. Sweep excess joint material from paved area.
    4. Compact pavers into bedding course using low-amplitude plate compactor capable of at least 5,000 lbs centrifugal compaction force. Make at least two passes with the plate compactor.
        a. Protect paver surface with mat attached to tamper or other approved method.
    5. Do not compact within 6 feet of an unrestrained edge.
    6. Apply additional No. 9 or 89 stone to joints as required to fill them completely.
    7. Pavers within 6 feet of the laying face shall be left fully compacted at the completion of each day.
    8. Surface tolerance of finished pavement shall be not more than +/-3/8 inch over a 10-foot straight edge.
    9. Surface elevation of finished pavement shall be 1/8 to 1/4 inches above adjacent drainage inlets.

3.3 FIELD QUALITY CONTROL

A. Sweep surface clean and verify conformance with drawings.
B. Verify that adjacent pavers have not more than 1/8 inch difference in height.
C. Verify final elevation of pavement to adjacent drainage inlets.
D. Verify straightness of bond lines.

3.4 PROTECTION

A. After work in this section is complete, General Contractor shale protect work from damage due to subsequent construction activity on site.

END OF SECTION 321443
04/10/2012

Conformed Set - May 29, 2015

PART 1 – GENERAL

1.01 DESCRIPTION OF WORK

A. Work Included: Granite curbing, complete in place, as shown on the Drawings and as specified herein.

B. Related Sections:
   1. Section 31 20 00 – Earth Moving.

   2. Section 32 12 16 – Asphalt Paving.

1.02 QUALITY ASSURANCE

A. Qualifications of Installers: Use adequate numbers of skilled workmen who are thoroughly trained and experienced in the necessary crafts and who are completely familiar with the specified requirements and the methods needed for proper performance of the work of this Section.

1.03 REFERENCES

A. Wherever reference is made to the DOT Specifications, it shall mean the Connecticut Department of Transportation Standard Specifications for Roads, Bridges and Incidental Construction Form 816(2004) as modified by Supplemental Specifications issued by the Connecticut Department of Transportation.

PART 2 – PRODUCTS

2.01 MATERIALS

A. Granite: Granite curbing shall conform to the requirements of Article M.12.06 of the DOT Specifications.

B. Mortar: Article M.11.04 of the DOT Specifications.

C. Concrete: Class ‘C’ Concrete shall conform to Article M.03.01 of Form 816 of the DOT Specficiations.

PART 3 – EXECUTION

3.01 CONSTRUCTION METHODS

A. Construction methods shall be in accordance with the applicable requirements of Article 8.13.03 of the DOT Specifications.

B. Remove and reset, Owner to inspect and Contractor to supplement where needed and replace damaged with new.

C. All new curb shall match existing curbing in adjacent areas.

D. All new curb shall be set in continuous concrete setting bed.

END OF SECTION

SECTION 323119 - DECORATIVE METAL FENCES AND GATES

1.1 SUMMARY

A. Section Includes:
1. Decorative ~~Metallic-Coated~~ **galvanized** steel **Guardrail B**, fences, **gates, hinges and padlocks.**
2. ~~Metallic-Coated~~ **stainless** steel tubular hand railing (at ramps).
3. Stainless steel pipe and mesh **Guardrail A**.

1.2 ACTION SUBMITTALS

A. Product Data: For each type of product.

1. Manufacturer's product lines of mechanically connected railings.
2. Railing brackets.
3. Grout, anchoring cement, and paint products.

B. Shop Drawings: For **fences, handrails, guardrails and** gates. Include plans, elevations, sections, details, and attachments to other work.

1. Include diagrams for power, signal, and control wiring.

C. Samples: For each ~~fence~~ material and for each color specified.

D. Sustainable Design Submittals:

1. Product Data: For recycled content, indicating postconsumer and pre-consumer recycled content and cost.

E. Delegated-Design Submittal: For railings, including analysis data signed and sealed by the qualified professional engineer responsible for their preparation.

1.3 INFORMATIONAL SUBMITTALS

A. Field quality-control reports.

B. Product Test Reports: For decorative galvanized **Guardrail B**, including finish, indicating compliance with referenced standard and other specified requirements.

C. Product Test Reports: For handrails and Guardrail A, for tests performed by a qualified testing agency, according to ASTM E 894 and ASTM E 935.

D. Field quality-control reports.

E. Delegated Design: Engage a qualified professional engineer, as defined in Section 014000 "Quality Requirements," to design railings, including attachment to building construction.

F. Structural Performance: Railings, including attachment to building construction, shall withstand the effects of gravity loads and the following loads and stresses within limits and under conditions indicated:

1. Handrails and Top Rails of Guards:

a. Uniform load of 50 lbf/ ft. applied in any direction.
b. Concentrated load of 200 lbf applied in any direction.
c. Uniform and concentrated loads need not be assumed to act concurrently.

2. Infill of Guards:

a. Concentrated load of 50 lbf applied horizontally on an area of 1 sq. ft. (0.093 sq. m).
b. Infill load and other loads need not be assumed to act concurrently.

1.4 CLOSEOUT SUBMITTALS

A. Maintenance Data: For gate operators to include in maintenance manuals.

PART 2 - PRODUCTS

2.1 DECORATIVE ~~METAL-COATED~~ **GALVANIZED** STEEL FENCES **AND GUARDRAIL B**

A. Decorative Steel Fences **and Guardrail B**: Fences made from steel bars and shapes hot-dip galvanized.
1. Posts: ~~Square steel bar, two (2) 1/2 inch by 1.9 inches galvanized steel flat bar with 1/2 inch by 1 1/2 inches, by 10 inches galvanized steel flat bar.~~ **See details.**

2. Post Caps: ~~1/2 inch by 1 1/2 inches by 2.85 inches galvanized steel flat bar.~~ **See details.**

3. Pickets: ~~[1/2-inch- (13-mm-) by 1 1/2 inches by 1 1/2 inches square steel flat bars.~~ **See details.**

4. Picket Spacing: ~~3 3/4 inches clear, maximum.~~ **See details.**

B. Fasteners: Stainless-steel ~~carriage~~ **connecting bolts and mating screws**.

C. Fabrication: Assemble fences into sections by welding pickets to rails.

D. ~~Fabrication: Fabricate bar grating infill into sections of size indicated~~.

E. Galvanizing: For items other than hardware that are indicated to be galvanized, hot-dip galvanize to comply with ASTM A 123/A 123M. For hardware items, hot-dip galvanize to comply with ASTM A 153/A 153M.

1. Hot-dip galvanize posts and rails.
2. Hot-dip galvanize rail and picket assemblies after fabrication.
3. Hot-dip galvanize ~~bar grating~~ infill after fabrication.

F. ~~Finish for Bar Grating Infill: Powder coating~~.

G. Finish for Steel Items: Shop painted.

H. Finish for Metallic-Coated-Steel Items Galvanized finish **for fences, guardrails, gates, hinges and padlocks.**

2.2 ~~METALLIC-COATED~~ **STAINLESS-STEEL** TUBULAR HAND RAILING, **GUARDRAIL A AND WIRE MESH**

A. Stainless-Steel Pipe Railings and Wire Mesh:

1. <u>Handrail: Cole Lighting (or approved equal) 626-443-2473</u>
a. Product: LR5 LED
b. Material: Stainless Steel
c. Fixture type: integral
2. **Guardrail A wire rope mesh: Carl Stahl (or approved equal) 312-474-1100**
a. Size: 2.0mm x 60mm mesh.

B. All handrail and guardrail metal shall be smooth and free of any sharp or abrasive elements. Edges shall be rounded.

C. Tubing: ASTM A 554, Grade MT 304.

D. Pipe: ASTM A 312/A 312M, Grade TP 304.

E. Plate and Sheet: ASTM A 240/A 240M or ASTM A 666, Type 304.

F. Posts: ~~3/4-inch~~ outside diameter steel pipe. **See details.**

G. Post Caps: ~~[Formed from steel sheet and hot-dip galvanized after forming]~~ **See details.**

H. Rail: ~~1/2-inch~~ outside diameter steel pipe. **See details.**

I. ~~Metallic-Coated Steel Sheet: Galvanized-steel sheet or aluminum-zinc, alloy-coated steel sheet.~~

J. ~~Finish: [Organic coating complying with requirements in ASTM F 2408] [Powder coating].~~

2.3 FASTENERS

A. General: Provide the following:
1. Stainless-Steel Railings: Type 304 stainless-steel fasteners.

B. Post-Installed Anchors: Torque-controlled expansion anchors capable of sustaining, without failure, a load equal to 6 times the load imposed when installed in unit masonry and 4 times the load imposed when installed in concrete, as determined by testing according to ASTM E 488/E 488M, conducted by a qualified independent testing agency.
1. Material for Exterior Locations and Where Stainless Steel Is Indicated: Alloy Group 1 (A1) stainless-steel bolts, ASTM F 593, and nuts, ASTM F 594.

2.4 COATING MATERIALS

A. ~~Epoxy Zinc-Rich Primer for Uncoated Steel: Complying with MPI #20 and compatible with coating specified to be applied over it~~.

B. ~~Epoxy Primer for Galvanized Steel: Epoxy primer recommended in writing by topcoat manufacturer~~.

C. ~~Intermediate Coat for Uncoated Steel: Epoxy or polyurethane intermediate recommended in writing by primer and topcoat manufacturer~~.

D. ~~Polyurethane [Intermediate Coat and] Topcoat: Complying with MPI #72 and compatible with undercoat~~.

E. Brackets, Flanges, and Anchors: Cast or formed metal of same type of material and finish as supported rails unless otherwise indicated.

2.5 MISCELLANEOUS MATERIALS

A. ~~Concrete: Normal-weight, air-entrained, ready-mix concrete complying with requirements in Section 033000 "Cast-in-Place Concrete" with a minimum 28-day compressive strength of 3000 psi (20 MPa), 3-inch (75-mm) slump, and 1-inch (25-mm) maximum aggregate size[or dry, packaged, normal-weight concrete mix complying with ASTM C 387/C 387M mixed with potable water according to manufacturer's written instructions]~~.

B. Welding Rods and Bare Electrodes: Select according to AWS specifications for metal alloy welded.

C. Non-shrink, Nonmetallic Grout: Factory-packaged, non-staining, noncorrosive, nongaseous grout complying with ASTM C 1107/C 1107M. Provide grout specifically recommended by manufacturer for interior and exterior applications.

D. Cover lens for Integral LED handrail to be clear.

E. Driver boxes for LED handrail to be in-post and will be identified by manufacturer and approved by engineer.

2.6 STAINLESS-STEEL FINISHES

A. Handrail: as per manufacturer's specifications

B. Non- Directional Satin Finish on all no product specified tubes or pipes

2.7 ~~METALLIC-COATED~~ **GALVANIZED** STEEL FINISHES

A. Galvanized Finish: Clean welds, mechanical connections, and abraded areas, and repair galvanizing to comply with ASTM A 780/A 780M.

B. Surface Preparation: Clean surfaces with nonpetroleum solvent so surfaces are free of oil and other contaminants. After cleaning, apply a [zinc-phosphate] conversion coating suited to the organic coating to be applied over it. Clean welds, mechanical connections, and abraded areas, and repair galvanizing to comply with ASTM A 780/A 780M.

C. ~~Powder Coating: Immediately after cleaning and pretreating, apply TGIC polyester powder-coat finish, with a minimum dry film thickness of 2 mils (0.05 mm)~~.

1. ~~Color and Gloss: As selected by Architect from manufacturer's full range~~.

D. ~~Powder Coating: Immediately after cleaning and pretreating, apply two-coat finish consisting of [zinc-rich]epoxy prime coat and TGIC polyester topcoat, with a minimum dry film thickness of 2 mils (0.05 mm) for topcoat. Comply with coating manufacturer's written instructions to achieve a minimum total dry film thickness of 4 mils (0.10 mm)~~.

1. ~~Color and Gloss: As selected by Architect from manufacturer's full range~~.

E. ~~High-Performance Coating: Apply epoxy primer, polyurethane intermediate coat, and polyurethane topcoat to prepared surfaces. Comply with coating manufacturer's written instructions and with requirements in SSPC-PA 1, "Paint Application Specification No. 1: Shop, Field, and Maintenance Painting of Steel," for shop painting. Apply at spreading rates recommended by coating manufacturer~~.

1. ~~Match approved Samples for color, texture, and coverage. Remove and refinish, or recoat work that does not comply with specified requirements~~.

F. Scope: All ferrous metal exposed to the weather, and all ferrous metals indicated on drawings or in specification to be galvanized, shall be cleaned and then hot-dipped galvanized after fabrication as provided by Duncan Galvanizing or equivalent

G. Avoid fabrication techniques that could cause distortion or embrittlement of steel items to be hot-dip galvanized. Fabricator shall consult with hot-dip galvanizer regarding potential warpage problems or handing problems during the galvanizing process that may require

adjustment of fabrication techniques or design before finalizing shop drawings and beginning of fabrication.

H. Cleaning: Thoroughly clean metal surfaces of all mill scale, rust, dirt, grease, oil, moisture and other contaminants prior to galvanizing.

I. Application: Hot-dip galvanizing shall be applied in accordance with:

1. ASTM A 143: Safeguarding Against Embrittlement of Hot-Dip Galvanized Structural Steel.

2. ASTM A 123: Standard Specification for Zing (Hot-Dip Galvanized) Coatings on Iron and Steel Products

3. ASTM A 153: Galvanized Coating on Iron and Steel Hardware – Table 1.

4. ASTM A 385: Practice for Providing High Quality Zinc Coatings.

5. ASTM A 924: Galvanized Coating on Steel Sheets.

6. Minimum weight of galvanized coating shall be two (2) oz. per square foot of surface.

J. Fabricate joints that will be exposed to weather in a manner to exclude water or provide weep holes where water may accumulate.

K. All galvanized materials must be inspected for compliance with these specifications and marked with a stamp indicating the name of the galvanizer, the weight of the coating, and the appropriate ASTM number.

L. To minimize surface imperfection (e.g.: flux inclusions), material to be galvanized shall be dipped into a solution of Zinc Ammonium Chloride (pre-flux) immediately prior to galvanizing. The type of galvanizing process utilizing a flux blanket overlaying the molten zinc will not be permitted.

M. After galvanizing, all materials not exposed to view must be chromated by dipping materials in a 0.2% chromic acid solution.

N. **Galvanized surfaces where exposed to view, must have a smooth, level surface finish. Where this does not occur, piece shall be rejected and replaced to the acceptance of the Architect. Posts: 3/4-inch outside diameter steel pipe.**

2.8 FABRICATION

A. Metals work not specified by manufacturer is subject to designated design by metal fabricator and will require shop drawings signed and sealed by an engineer licensed by state.

B. Cut, drill, and punch metals cleanly and accurately. Remove burrs and ease edges to a radius of approximately 1/32 inch unless otherwise indicated. Remove sharp or rough areas on exposed surfaces.

C. Form work true to line and level with accurate angles and surfaces.

D. Welded Connections: Cope components at connections to provide close fit, or use fittings designed for this purpose. Weld all around at connections, including at fittings.

1. **Use materials and methods that minimize distortion and develop strength and corrosion resistance of base metals.**
2. **Obtain fusion without undercut or overlap.**
3. **Remove flux immediately.**
4. **At exposed connections, finish exposed surfaces smooth and blended so no roughness shows after finishing and welded surface matches contours of adjoining surfaces.**

E. Non-welded Connections: Connect members with concealed mechanical fasteners and fittings. Fabricate members and fittings to produce flush, smooth, rigid, hairline joints.

F. Form changes in direction by bending.

G. For changes in direction made by bending, use jigs to produce uniform curvature for each repetitive configuration required. Maintain cross section of member throughout entire bend without buckling, twisting, cracking, or otherwise deforming exposed surfaces of components.

H. Close exposed ends of railing members with prefabricated end fittings.

I. Provide wall returns at ends of wall-mounted handrails unless otherwise indicated.

J. Brackets, Flanges, Fittings, and Anchors: Provide wall brackets, flanges, miscellaneous fittings, and anchors to interconnect railing members to other work unless otherwise indicated.

1. **At brackets and fittings fastened to plaster or gypsum board partitions, provide crush-resistant fillers or other means to transfer loads through wall finishes to structural supports and prevent bracket or fitting rotation and crushing of substrate.**

K. Woven-Wire Mesh fabric Infill: Carl Stahl 'X-TEND' stainless steel cable mesh in 60 mm widths. Mesh is joined with tinned copper ferules. Mesh fabric will be fastened and woven to 1 ½" dia. top and bottom stainless steel rail.

1. **Orient wire mesh with diamonds perpendicular to top rail. Field weave mesh with top and bottom rail.**

2. **At corner where Mesh Fabric changes direction a vertical support is required.**

PART 3 - EXECUTION

3.1 DECORATIVE FENCE, **HAND RAIL AND GUARDRAIL** INSTALLATION

A. Install fences according to manufacturer's written instructions.

B. ~~Install fences by setting posts as indicated and fastening rails to posts. Peen threads of bolts after assembly to prevent removal~~.

C. Post Excavation: Drill or hand-excavate holes for posts in firm, undisturbed soil. Excavate holes to a diameter of not less than 4 times post size and a depth of not less than 24 inches (600 mm) plus 3 inches (75 mm) for each foot (300 mm) or fraction of a foot (300 mm) that fence height exceeds 4 feet (1.2 m).

D. Post Setting: Set posts in concrete at indicated spacing into firm, undisturbed soil.

1. Verify that posts are set plumb, aligned, and at correct height and spacing, and hold in position during setting with concrete or mechanical devices.
2. ~~Concrete Fill: Place concrete around [posts] [and] [sleeves] and vibrate or tamp for consolidation. Protect aboveground portion of posts from concrete splatter~~.
3. ~~Posts Set in Concrete: Extend post to within 6 inches (150 mm) of specified excavation depth, but not closer than 3 inches (75 mm) to bottom of concrete~~.
4. ~~Mechanically Driven Posts: Drive into soil to depth of [30 inches (762 mm)] [36 inches (914 mm)]. Protect post top to prevent distortion~~.
5. Space posts uniformly as indicated in drawings.

E. Set railings accurately in location, alignment, and elevation; measured from established lines and levels and free of rack.

1. Do not weld, cut, or abrade surfaces of railing components that are coated or finished after fabrication and that are intended for field connection by mechanical or other means without further cutting or fitting.
2. Set posts plumb within a tolerance of 1/16 inch in 3 feet (2 mm in 1 m).
3. Align rails so variations from level for horizontal members and variations from parallel with rake of steps and ramps for sloping members do not exceed 1/4 inch in 12 feet (6 mm in 3.5 m).

F. Control of Corrosion: Prevent galvanic action and other forms of corrosion by insulating metals and other materials from direct contact with incompatible materials.

1. Coat, with a heavy coat of bituminous paint, concealed surfaces of aluminum that are in contact with grout, concrete, masonry, wood, or dissimilar metals.

3.2 ANCHORING POSTS

A. Use metal sleeves preset and anchored into concrete for installing posts. After posts are inserted into sleeves, fill annular space between post and sleeve with non-shrink, nonmetallic grout, mixed and placed to comply with anchoring material manufacturer's written instructions.

B. Form or core-drill holes not less than 8 inches deep and 3/4 inch (20 mm) larger than OD of post for installing posts in concrete. Clean holes of loose material, insert posts, and fill annular space between post and concrete with non-shrink, nonmetallic grout, mixed and placed to comply with anchoring material manufacturer's written instructions.

C. Anchor posts to metal surfaces with oval flanges, angle type, or floor type as required by conditions, connected to posts and to metal supporting members.

3.3 ATTACHING RAILINGS

1. Railing, pickets and wire mesh infill panels' attachment will be shown in shop drawings and signed by an engineer and approved by an architect.

3.4 ADJUSTING, CLEANING, AND PROTECTION

A. All metal handrails and guardrail elements will be clear of hand/finger prints, tea staining, dents and rusting print to completion of Work.

B. Protect handrails and guardrails during Work in this contract.

END OF SECTION 323119

SECTION 32 9001 - TRANSPLANTING

PART 1 - GENERAL

1.1 RELATED DOCUMENTS

A. Drawings and general provisions of the Contract, including General and Supplementary Conditions and Division 1 Specification Sections, apply to this Section.

B. LEED BUILDING GENERAL REQUIREMENTS:
   1. Implement practices and procedures to meet the project's environmental goals, which include achieving a LEED™ 2009 New Construction Silver rating. Specific project goals which may impact this and the other sections of this specification include: use of recycled-content materials; use of locally-manufactured materials; use of low-emitting materials; use of certified wood products; construction waste recycling; and the implementation of a construction indoor air quality management plan. Ensure that the requirements related to these goals, as defined in this Section and other Sections of the contract documents, are implemented to the fullest extent. Substitutions or other changes to the work shall not be allowed if such changes substantially compromise the stated LEED Building criteria.
   2. Comply with LEED (Leadership in Energy and Environmental Design) Green Building Rating System BD+C, Version 3, Silver.

1.2 SUMMARY

A. Section includes transplanting non-nursery-grown trees by tree spade or digging and boxing.

B. Related Requirements:

   1. Division 1 Section "Tree Protection and Trimming" for protecting, trimming, pruning, repairing, and replacing existing trees to remain that interfere with, or are affected by, execution of the Work.
   2. Division 2 Section "Planting" for new trees from nursery-grown sources.

1.3 DEFINITIONS

A. General: See definitions in ANSI A300 (Part 6) and in ANSI Z60.1 pertaining to field-grown trees, except as otherwise defined in this Section.

B. Caliper: Diameter of a trunk as measured by a diameter tape at a height 6 inches (150 mm) above the root flair for trees up to, and including, 4-inch (100-mm) size at this height; and as measured at a height of 12 inches (300 mm) above the root flair for trees larger than 4-inch (100-mm) size.

Conformed Set - May 29, 2015

C. Caliper (DBH): Diameter breast height; diameter of a trunk as measured by a diameter tape at a height 54 inches (1372 mm) above the ground line for trees with caliper of 8 inches (200 mm) or greater as measured at a height of 12 inches (300 mm) above the root flair.

D. Root-Ball Depth: Measured from bottom of trunk flare to the bottom of root ball.

E. Root-Ball Width: Measured horizontally across the root ball with an approximately circular form or the least dimension for non-round root balls, not necessarily centered on the tree trunk, but within tolerance according to ANSI Z60.1.

F. Root Flare: Also called "trunk flare." The area at the base of the tree's stem or trunk where the stem or trunk broadens to form roots; the area of transition between the root system and the stem or trunk.

1.4 PREINSTALLATION MEETINGS

A. Preinstallation Conference: Conduct conference at Project site.

1. Review methods and procedures related to transplanting work include, but are not limited to, the following:

   a. Construction schedule. Verify availability of materials, personnel, equipment, and unimpeded access needed to make progress and avoid delays.
   b. Tree and plant protection.
   c. Tree maintenance.
   d. Arborist's responsibilities.

1.5 ACTION SUBMITTALS

A. Product Data: For each type of product.

B. Samples for Verification: For each of the following:

1. Proprietary Root-Ball-Stabilization Device: One unit.
2. Slow-Release Watering Device: One unit of each size required.

C. Pruning Schedule: Written schedule prepared by arborist detailing scope and extent of pruning each tree in preparation for and subsequent to transplanting.

1. Species and size of plant.
2. Location on site plan.
3. Reason for pruning.
4. Seasonal limitations on pruning.
5. Preparatory Pruning: Time schedule and description of preparatory pruning to be performed.
6. Description of root and crown pruning during and subsequent to transplanting.
7. Description of maintenance following pruning.

1.6 INFORMATIONAL SUBMITTALS

A. Qualification Data: For qualified tree-service firm and arborist.

B. Certification: From arborist, certifying that transplanted trees have been protected during construction and that trees were promptly and properly treated and repaired when damaged.

C. Maintenance Recommendations: From arborist, recommended procedures to be established by Owner for care and protection of trees after completing the Work.

1. Submit before completing the Work.

D. Existing Conditions: Documentation of existing trees indicated to be transplanted, which establishes preconstruction conditions that might be misconstrued as damage caused by construction activities.

1. Use sufficiently detailed color photographs or video recordings. Color shall accurately depict hue condition of foliage and bark.
2. Include drawings and notations to indicate specific wounds and damage conditions of each tree designated to be transplanted.

E. Tree-Transplanting Program: Submit before work begins.

F. Sample Warranties: For special warranties.

G. Tree-maintenance reports.

1.7 QUALITY ASSURANCE

A. Tree-Service Firm Qualifications: An experienced landscaping contractor or tree-moving firm that has successfully completed transplanting work similar to that required for this Project and that will assign an experienced, qualified arborist to Project site during execution of the Work.

1. Arborist Qualifications: Certified Arborist as certified by ISA, Licensed arborist in jurisdiction where Project is located.

B. Tree-Transplanting Program: Prepare a written plan by arborist for transplanting trees for the whole Project, including each phase or process, tree maintenance, and protection of surrounding materials during operations. Describe in detail the materials, methods, and equipment to be used for each phase of the transplanting work.

1. Include transplanting times appropriate for each species at the Project location unless otherwise indicated on Drawings or directed by arborist.
2. Include a transplanting schedule for each species to be transplanted, coordinated with the Project schedule.
3. Show details of temporary protective barriers where needed.
4. Include care and maintenance provisions and eventual removal of tree stabilization.

1.8 DELIVERY, STORAGE, AND HANDLING

A. Packaged Materials: Deliver packaged materials in original, unopened containers showing weight, certified analysis, name and address of manufacturer, and indication of conformance with state and federal laws if applicable.

B. Bulk Materials:

1. Do not dump or store bulk materials near structures, utilities, walkways and pavements, or on existing turf areas or trees.
2. Provide erosion-control measures to prevent erosion or displacement of bulk materials, discharge of soil-bearing water runoff, and airborne dust reaching adjacent properties, water conveyance systems, or walkways.
3. Accompany each delivery with appropriate certificates.

C. Protect bark, branches, and root systems from sun scald, drying, wind burn, sweating, whipping, and other handling and tying damage. Do not bend or bind-tie trees in such a manner as to destroy their natural shape.

D. Handle trees by root ball. Do not drop trees.

E. Move trees after preparations for planting have been completed, and install immediately. If planting is delayed more than six hours after moving, set trees in their appropriate aspect (sun, filtered sun, or shade), protect from weather and mechanical damage, and keep roots moist.

1.9 FIELD CONDITIONS

A. Field Measurements: Verify final grade elevations and final locations of trees and construction contiguous with trees by field measurements before proceeding with transplanting work. Perform transplanting only after finish grades are established.

B. Seasonal Restrictions: Transplant trees during the following in-season periods:

1. Spring: Prior to leaves.

C. Weather Limitations: Proceed with transplanting only when existing and forecasted weather conditions permit planting to be performed when beneficial and optimum results may be obtained. Do not transplant during excessively wet or frozen conditions. Apply products during favorable weather conditions according to manufacturer's written instructions and warranty requirements.

D. Coordination with Turf Areas (Lawns): Perform transplanting before planting turf areas unless otherwise indicated.

1. When transplanting in existing planting turf areas, protect turf areas, and promptly repair damage caused by transplanting operations.

1.10 WARRANTY

A. Installer's Special Warranty: Tree-service firm agrees to repair or replace trees and related materials that fail within specified warranty period.

1. Failures include, but are not limited to, the following:

a. Death and unsatisfactory growth except for defects resulting from abuse, lack of adequate maintenance, or neglect by Owner, or incidents that are beyond Contractor's control.
b. Death and unsatisfactory growth is defined as more than 25 percent dead or in an unhealthy condition or failure to meet general performance requirements at end of warranty period.
c. Structural failures including trees falling or blowing over.
d. Faulty performance of materials and devices related to tree plantings including tree stabilization and watering devices.

2. Warranty Periods from Date of Transplanting Completion:

a. Trees: 12 months.

3. Include the following remedial actions as a minimum:

a. Remove dead trees and trees with unsatisfactory growth at end of warranty period; replace when directed.
b. A limit of one replacement of each tree will be required except for losses or replacements due to failure to comply with requirements.
c. Replace materials and devices related to tree plantings.
d. Provide extended warranty for period equal to original warranty period, for replaced trees.

1.11 MAINTENANCE SERVICE

A. Initial Maintenance Service: Provide tree maintenance by skilled employees of tree-service firm and as required in Part 3. Begin maintenance immediately after trees are installed and continue until plantings are healthy and well established but for not less than maintenance period below.

1. Maintenance Period: 12 months from date of transplanting completion.

Conformed Set - May 29, 2015

PART 2 - PRODUCTS

2.1 PERFORMANCE REQUIREMENTS

A. General Performance: Transplanted trees shall be healthy and resume vigorous growth within one year of transplanting without dieback due to defective extracting, handling, planting, maintenance, or other defects in the Work.

2.2 PLANTING MATERIALS

A. Backfill Soil: Excavated soil of suitable moisture content and granular texture for placing and compacting in planting pit around tree, and free of stones, roots, plants, sod, clods, clay lumps, pockets of coarse sand, concrete slurry, concrete layers or chunks, cement, plaster, building debris, and other extraneous materials harmful to plant growth.

2.3 TREE-STABILIZATION MATERIALS

A. Root-Ball-Stabilization Materials:

1. As shown on the drawings.

2.4 WATERING DEVICES

A. Slow-Release Watering Device: Standard product manufactured for drip-irrigation of plants and emptying its water contents over a period of 9 hours; manufactured from UV-light stabilized nylon-reinforced polyethylene sheet, PVC, or HDPE plastic.

1. Products: Subject to compliance with requirements, available products that may be incorporated into the Work include, but are not limited to, the following:

a. Spectrum Products, Inc.; Treegator (Original) or Treegator Jr. Pro.
b. Turf Chemicals Plus, Inc.; Tree Ring (Regular) or] Tree Ring Jr..

2.5 MISCELLANEOUS PRODUCTS

A. Organic Mulch: as specified in Division 2 Section "Landscape Work."

B. Antidesiccant: Water-insoluble emulsion, permeable moisture retarder, film forming, for trees. Deliver in original, sealed, and fully labeled containers and mix according to manufacturer's written instructions.

C. Burlap: Non-synthetic, biodegradable.

D. Pesticides: Pesticide registered and approved by EPA, acceptable to authorities having jurisdiction, and of type recommended in writing by manufacturer for each specific problem and

as required for Project conditions and application. Do not use restricted pesticides unless authorized in writing by authorities having jurisdiction.

1. Pre-Emergent Herbicide (Selective and Non-Selective): Effective for controlling the germination or growth of weeds within planted areas at the soil level directly below the mulch layer.
2. Post-Emergent Herbicide (Selective and Non-Selective): Effective for controlling weed growth that has already germinated.

E. Planting Tablets: Tightly compressed chip type, long-lasting, slow-release, commercial-grade planting fertilizer in tablet form. Tablets shall break down with soil bacteria, converting nutrients into a form that can be absorbed by plant roots.

1. Size: 5-gram tablets.
2. Nutrient Composition: 20 percent nitrogen, 10 percent phosphorous, and 5 percent potassium, by weight plus micronutrients.

PART 3 - EXECUTION

3.1 EXAMINATION

A. Erosion and Sedimentation Control: Examine the site to verify that temporary erosion- and sedimentation-control measures are in place. Verify that flows of water redirected from construction areas or generated by construction activity do not enter or cross transplanting areas.

B. For the record, prepare written report, endorsed by arborist, listing conditions detrimental to transplanting work and tree protection and health.

C. Proceed with transplanting only after unsatisfactory conditions have been corrected.

3.2 PREPARATION

A. Protect structures, utilities, sidewalks, pavements, other facilities, turf areas, and other plants and planting areas from damage caused by transplanting operations.

B. Utility Locator Service: Notify utility locator service or Dig Safe for area where Project is located before beginning excavation.

C. Locate and clearly identify trees for transplanting. Flag or Tie a 1-inch (25-mm) vinyl tape around each tree at 54 inches (1372 mm) above the ground.

D. Lay out individual transplant locations and areas for multiple plantings. Stake locations, outline areas, adjust locations when requested, and obtain Architect's acceptance of layout before transplanting. Make minor adjustments as required.

E. Apply antidesiccant to trees uniformly, using power spray to provide an adequate film over trunks (before wrapping), branches, stems, twigs, and foliage to protect during extracting, handling, and transportation.

1. If deciduous trees are moved in full leaf, spray with antidesiccant before extracting and again two weeks after transplanting.

F. Wrap trees with burlap fabric over trunks, branches, stems and twigs to protect from wind and other damage during extracting, handling, and transporting.

3.3 PREPARATORY PRUNING

A. Crown Pruning (Tip Pruning):

1. Perform preparatory crown pruning as directed by arborist.

3.4 EXCAVATION AND PLANTING EQUIPMENT

A. Tree Spade: Track-mounted mechanized tree mover; sized according to manufacturer's size recommendation for each tree being transplanted.

3.5 EXCAVATING PLANTING PITS

A. General: Excavate under supervision of the arborist.

1. Excavate planting pits with sides sloping. Trim perimeter of bottom leaving center area of bottom raised slightly to support root ball and assist in drainage away from center. Do not further disturb base. Ensure that root ball will sit on undisturbed base soil. Scarify sides of planting pit smeared or smoothed during excavation.
2. Excavate approximately two times as wide as root ball.
3. Keep excavations covered or otherwise protected until replanting trees.

B. Subsoil and topsoil removed from excavations may be used as planting soil.

C. Obstructions: Notify Architect if unexpected rock or obstructions detrimental to trees are encountered in excavations.

1. Hardpan Layer: Drill 6-inch- (150-mm-) diameter holes, 24 inches (600 mm) apart, into free-draining strata or to a depth of 10 feet (3 m), whichever is less, and backfill with free-draining material.

D. Seepage: Notify Architect if subsoil conditions evidence unexpected water seepage into tree-planting pits.

E. Drainage: Fill planting pit or trench with 6 inches (152 mm) of water and time the infiltration rate of the soil. If the drainage rate is less than 0.25 inch (6 mm) per hour, notify Architect to determine need for subsurface drainage.

F. Saline or Sodic Soils: Completely fill excavations with water and allow to percolate away before positioning trees.

3.6 EXTRACTING TREES

A. General: Extract trees under supervision of the arborist.

B. Orientation Marking: Mark the north side of each tree with non-permanent paint before extracting.

C. Root-Ball Width: Minimum 10 inches (250 mm) of root-ball diameter, or least dimension for non-round root balls, for each inch (25 mm) of tree caliper being transplanted.

D. Root-Ball Depth: As determined by the arborist for each species and size of tree and for site conditions at original and planting locations.

E. Digging:

1. Dig and clear a pit by hand or with tree spade to the depth of the root system. Do not use a backhoe or other equipment that rips, tears, or pulls roots.
2. Use narrow-tine spading forks to comb soil to expose roots with minimal damage to root system.
3. If encountering large, main lateral roots, expose roots beyond excavation limits as required to bend and redirect them without breaking.
4. Cut exposed roots manually with sharp pruning instruments; do not break, tear, chop, or slant the cuts. Do not paint or apply sealants on cut root ends.
5. Construct box tight against root system sides and bottom as pit is dug. Brace and support box to prevent breaking of root ball.
6. Temporarily support and protect exposed roots from damage until they are permanently redirected and covered with soil. Cover roots with burlap and keep them moist until planted.

F. Extracting with Tree Spade: Use the same tree spade to extract the tree as will be used to transport and plant the tree.

1. Do not use tree spade to move trees larger than the manufacturer's maximum size recommendation for the tree spade being used.
2. When extracting the tree, center the trunk within the tree spade and move tree with a solid ball of earth.

3.7 PLANT HEELED-IN/TEMPORARY STORAGE

A. Storage

1. Place plant in a shallow (8”) hole and cover the root ball with a 2 to 4-inch layer of bark mulch
2. Keep root ball from freezing, if required, by using plant blanket
3. Trees to be kept upright. Use movable weights such as concrete blocks
4. Allow enough room around plant to allow for natural plant form to be maintained.
5. Store plants in shady location
6. Spray plant leaves with anti-dessicant spray
7. Conform to standard Heel-In procedures

B. Maintenance
1. Keep rootball moist at all times
2. Licensed arborist to inspect plants and file report with owner every two weeks for entire length of storage.

3.8 PLANTING

A. Planting Standard: Perform planting according to ANSI A300 (Part 6) unless otherwise indicated.

B. Before planting, verify that root flare is visible at top of root ball. If root flare is not visible, remove soil in a level manner from the root ball to where the top-most root emerges from the trunk. After soil removal to expose the root flare, verify that root ball still meets size requirements.

C. Ensure that root flare is visible after planting.

D. Remove injured roots by cutting cleanly; do not break. Do not paint or apply sealants on cut root ends.

E. Orientation: Position the tree so that its north side, marked before extracting, is facing north in its new location.

F. Set tree plumb and in center of planting pit with bottom of root flare 1 inch (25 mm) above adjacent finish grades.

1. Use specified backfill soil for backfill.
2. If area under the tree was initially dug too deep, add backfill to raise it to the correct level and thoroughly tamp the added soil to prevent settling.
3. After placing some backfill around root ball to stabilize plant, begin backfilling.
4. Backfill around root ball in layers, tamping to settle soil and eliminate voids and air pockets. When planting pit is approximately one-half filled, water thoroughly before placing remainder of backfill. Repeat watering until no more water is absorbed.
5. Redirect exposed root ends downward in backfill areas where possible. Hand-expose roots as required to bend and redirect them without breaking. If encountered immediately adjacent to location of new construction and redirection is not practical, cut roots approximately 3 inches (75 mm) back from new construction and as required for root pruning.

6. Place planting tablets in each planting pit when pit is approximately one-half filled; in amounts recommended by arborist. Place tablets beside the root ball about 1 inch (25 mm) from root tips; do not place tablets in bottom of the hole.
7. Continue backfilling process. Water again after placing and tamping final layer of soil.

G. Planting with Tree Spade: Use the same tree spade for planting as was used to extract and transport the tree. Do not use tree spade for trees larger than the manufacturer's maximum size recommendation for the tree spade being used.

H. Slopes: When planting on slopes, set the tree so the root flare on the uphill side is flush with the surrounding soil on the slope; the edge of the root ball on the downhill side will be above the surrounding soil. Apply enough soil to cover the downhill side of the root ball.

3.9 CROWN PRUNING

A. Prune branches as directed by arborist.

1. Prune to remove only injured, broken, dying, or dead branches. Do not prune for shape.
2. Do not remove or reduce living branches to compensate for root loss caused by cutting root system or to improve natural tree form.
3. Pruning Standards: Perform pruning according to ANSI A300 (Part 1).

B. Unless otherwise directed by arborist and acceptable to Architect, do not cut tree leaders.

C. Cut branches with sharp pruning instruments; do not break or chop.

D. Do not paint or apply sealants to wounds.

E. Provide subsequent maintenance during Contract period as recommended by arborist.

3.10 TREE STABILIZATION

A. Root-Ball Stabilization: Install below-grade stabilization system to secure each new planting by the root ball unless otherwise indicated on Drawings.

1. Proprietary Root-Ball-Stabilization Device: Install root-ball-stabilization system sized and positioned as recommended by manufacturer unless otherwise indicated and according to manufacturer's written instructions.

3.11 MULCHING

A. Organic Mulch: Apply 3-inch (75-mm) average thickness of organic mulch over whole surface of planting area, and finish level with adjacent finish grades. Do not place mulch within 3 inches (75 mm) of trunks or stems.

3.12 INSTALLING SLOW-RELEASE WATERING DEVICE

A. Place device on top of the mulch at base of tree and fill with water according to manufacturer's written instructions.

3.13 TREE MAINTENANCE

A. Perform tree maintenance as recommended by arborist. Maintain arborist observation of transplanting work.

B. Maintain trees by pruning, cultivating, watering, weeding, fertilizing, mulching, restoring planting saucers, adjusting and repairing tree-stabilization devices, resetting to proper grades or vertical position, and performing other operations as required to establish healthy, viable plantings. Treat as required to keep trees free of insects and disease.

C. From time of tree extraction measure soil moisture adjacent to edge of each root ball weekly. Record findings and weather conditions.

D. Fill areas of soil subsidence with backfill soil. Replenish mulch materials damaged or lost in areas of subsidence.

E. Apply treatments as required to keep tree materials, planted areas, and soils free of pests and pathogens or disease. Use integrated pest management practices whenever possible to minimize the use of pesticides and reduce hazards. Treatments include physical controls such as hosing off foliage, mechanical controls such as traps, and biological control agents.

F. Pesticide Application: Apply pesticides and other chemical products and biological control agents in accordance with authorities having jurisdiction and manufacturer's written instructions. Coordinate applications with Owner's operations and others in proximity to the Work. Notify Owner before each application is performed.

1. Pre-Emergent Herbicides (Selective and Non-Selective): Apply in accordance with manufacturer's written instructions. Do not apply to seeded areas.
2. Post-Emergent Herbicides (Selective and Non-Selective): Apply only as necessary to treat already-germinated weeds and in accordance with manufacturer's written instructions.

G. Reports: Have arborist prepare monthly inspection reports.

3.14 REPAIR AND REPLACEMENT

A. General: Repair or replace transplanted trees that are damaged by construction operations, in a manner recommended by the arborist and approved by Architect.

1. Submit details of proposed pruning and repairs.
2. Perform repairs of damaged trunks, branches, and roots within 24 hours according to arborist's written instructions.

3. Replace trees and other plants that cannot be repaired and restored to full-growth status, as determined by Architect.

B. Remove and replace trees that are more than 25 percent dead or in an unhealthy condition before the end of the corrections period or are damaged during construction operations that Architect determines are incapable of restoring to normal growth pattern.

1. Provide new trees of same size as those being replaced.
2. Species of Replacement Trees: Same species being replaced.

3.15 CLEANUP AND PROTECTION

A. During transplanting, keep adjacent paving and construction clean and work area in an orderly condition.

B. Protect trees from damage due to transplanting operations and operations of other contractors and trades. Maintain protection during transplanting and maintenance periods. Treat, repair, or replace damaged plantings.

C. After planting and before Substantial Completion, remove tags, markings, tie tape, labels, wire, burlap, and other debris from transplanted trees, planting areas, and Project site.

3.16 DISPOSAL OF SURPLUS AND WASTE MATERIALS

A. Except for materials indicated to be recycled, remove surplus soil, excess excavated material, waste materials, displaced plants, trash, and debris, and legally dispose of them off Owner's property.

B. Transport surplus satisfactory soil to designated storage areas on Owner's property. Stockpile or spread soil as directed by Architect.

1. Except for materials indicated to be retained on Owner's property or recycled, remove excess excavated material, waste materials, displaced plants, trash, and debris, and legally dispose of them off Owner's property.

END OF SECTION

SECTION 329113 - SOIL PREPARATION

PART 1 - GENERAL

1.1 RELATED DOCUMENTS

A. Drawings and general provisions of the Contract, including General and Supplementary Conditions and Division 01 Specification Sections, apply to this Section.

B. LEED BUILDING GENERAL REQUIREMENTS:

1. Implement practices and procedures to meet the project's environmental goals, which include achieving a LEED™ 2009 New Construction Silver rating. Specific project goals which may impact this and the other sections of this specification include: use of recycled-content materials; use of locally-manufactured materials; use of low-emitting materials; use of certified wood products; construction waste recycling; and the implementation of a construction indoor air quality management plan. Ensure that the requirements related to these goals, as defined in this Section and other Sections of the contract documents, are implemented to the fullest extent. Substitutions or other changes to the work shall not be allowed if such changes substantially compromise the stated LEED Building criteria.
2. Comply with LEED (Leadership in Energy and Environmental Design) Green Building Rating System BD+C, Version 3, Silver.

1.2 SUMMARY

A. Section includes following planting soils and soil components specified by composition of the mixes, listed below:

1. Imported Topsoil
2. Amended Soil
3. Sand
4. Existing Stockpiled Soil
5. Interconnected Structural Soil Cell

B. Related Sections:

1. Section 015639 "Temporary Tree and Plant Protection" for protecting, trimming, pruning, repairing, and replacing existing trees to remain that interfere with, or are affected by, execution of the Work.
2. Section 017419 Construction and Demolition Waste Management
3. Section 018113 VOC Limits for Adhesives, Sealants, Paints and Coatings
4. Section 018119 Construction Indoor Air Quality (IAQ) Management
5. Section 129200 "Interior Planters and Artificial Plants" for live and artificial interior plants and planters.
6. Section 129300 "Site Furnishings" for exterior unit planters.

7. Section 311000 "Site Clearing" for protection of existing trees and plantings, topsoil stripping and stockpiling, and site clearing.
8. Section 312000 "Earth Moving" for excavation, filling, and rough grading and for subsurface aggregate drainage and drainage backfill materials.
9. Section 329200 "Turf and Grasses" for turf (lawn) and meadow planting, hydroseeding, and erosion-control materials.
10. Section 329300 “Plants” for exterior plantings, trees, tree stabilization, landscape edging, green roof plants, and gravel stabilization and tree root protection.
11. Section 334600 "Subdrainage" for below-grade drainage of landscaped areas, paved areas, and wall perimeters.

1.3 ALLOWANCES

A. Allowances for soils are specified in Section 012100 "Allowances."

B. If using quantity allowances, retain three subparagraphs below or include similar language in Section 012100 "Allowances."

1. Perform planting work under quantity allowances and only as authorized. Authorized work includes work authorized in writing by Architect.
2. Notify Architect daily of extent of work performed that is attributable to quantity allowances.
3. Perform work that exceeds quantity allowances only as authorized by Change Orders.

C. Furnish trees, shrubs, and groundcovers as part of the contract documents allowance.

1.4 UNIT PRICES

A. Work of this Section is affected by unit prices specified in Section 012200 "Unit Prices."

1. Unit prices apply to authorized work covered by quantity allowances.
2. Unit prices apply to additions to and deletions from Work as authorized by Change Orders.

1.5 DEFINITIONS

A. The following references are used herein and shall mean:
1. ASTM: American Society of Testing Materials
2. USDA: United States Department of Agriculture
3. AASHTO: American Association of State Highway and Transportation Officials
4. Standard Specifications: Regional or Municipal Standard Specifications Documentation for the location of proposed usage
5. AOAC: Association of Official Agricultural Chemists

B. Amended Soil- a mixture of 1/3 approved ‘Imported Topsoil’ and 2/3 of ‘existing stockpile soil’ mixed on site by qualified installing contractor.

C. Existing stockpile soil – soil excavated from the existing soil and stockpiled on site based on approved specification methods refer to 1.13.C of this specification section. Shall be free of trash, large materials, and construction debris.

D. Fertilizer- natural or synthetic materials applied to the soil to supply nutrients essential to plant growth.

E. Finish Grade: Elevation of finished surface of planting soil.

F. Imported Topsoil- Soil produced off-site by homogeneously blending mineral soils or sand with stabilized organic soil amendments to produce topsoil soil.

G. Mycorrhizae: organisms that create a symbiotic relationship with vascular plant roots; usually are a fungus that aids the roots in nutrient absorption.

H. Organic Matter: The total of organic materials in soil exclusive of undecayed plant and animal tissues, their partial decomposition products, and the soil biomass; also called "humus" or "soil organic matter."

I. Pesticide: A substance or mixture intended for preventing, destroying, repelling, or mitigating a pest. This includes insecticides, miticides, herbicides, fungicides, rodenticides, and molluscicides. It also includes substances or mixtures intended for use as a plant regulator, defoliant, or desiccant.

J. Pests: Living organisms that occur where they are not desired, or that cause damage to plants, animals, or people. These include insects, mites, grubs, mollusks (snails and slugs), rodents (gophers, moles, and mice), unwanted plants (weeds), fungi, bacteria, and viruses.

K. Planting Area: Areas to be planted.

L. Plant; Plants; Plant Material: These terms refer to vegetation in general, including trees, shrubs, vines, ground covers, ornamental grasses, bulbs, corms, tubers, or herbaceous vegetation.

M. RCRA Metals: Hazardous metals identified by the EPA under the Resource Conservation and Recovery Act.

N. Root Flare: Also called "trunk flare." The area at the base of the plant's stem or trunk where the stem or trunk broadens to form roots; the area of transition between the root system and the stem or trunk.

O. SSSA: Soil Science Society of America.

P. Soil Shrinkage: the specific volume change of soil relative to its water content and is mainly due to clay swelling properties.

Q. Subgrade: Surface or elevation of subsoil remaining after excavation is complete, or the top surface of a fill or backfill before planting soil is placed.

R. Subsoil: All soil beneath the topsoil layer of the soil profile, and typified by the lack of organic matter and soil organisms.

S. Surface Soil: Soil that is present at the top layer of the existing soil profile at the Project site. In undisturbed areas, the surface soil is typically topsoil; but in disturbed areas such as urban environments, the surface soil can be subsoil.

1.6 PREINSTALLATION MEETINGS

A. Pre-installation Conference: Conduct conference at University of Connecticut project site location, Storrs, CT 06269

1.7 ACTION SUBMITTALS

A. Product Data: At least 30 days prior to ordering materials, for each type of product indicated in 1.2.A of this section, the installing contractor shall submit to the engineer the follow product information:
   1. Manufacturer's recommended application and use.
   2. Test data substantiating that the products comply quality assurance requirements as listed in 1.9 of this section.
   3. Include Sieve analysis for 'sand' as defined in 1.2.A of this section complying with the quality assurance requirements listed in 1.9 of this section.
   4. Material Certificates: For Imported Topsoil before delivery to the site, according to the following:

      a. Manufacturer's qualified testing agency's certified analysis of standard products.
      b. Analysis of fertilizers, by a qualified testing agency, made according to AAPFCO methods for testing and labeling and according to AAPFCO's SUIP #25.
      c. Analysis of nonstandard materials, by a qualified testing agency, made according to SSSA methods, where applicable.

B. Sustainable Design Submittals:

   1. Product Certificates: For regional materials, indicating location of material manufacturer and point of extraction, harvest, or recovery for each raw material. Include distance to Project and cost for each regional material.

C. Samples for Verification: For each bulk-supplied material as listed in 1.2.A in the summary of this section, 1-gallon volume of each in sealed containers labeled with content, source, and date obtained. Each Sample shall be typical of the lot of material to be furnished; provide an accurate representation of composition, color, and texture.

1.8 INFORMATIONAL SUBMITTALS

A. Qualification Data:
   1. For qualified landscape Installer. Include list of similar projects completed by Installer demonstrating Installer's capabilities and experience. Include project names, addresses, and year completed, and include names and addresses of owners' contact persons.
   2. For each testing agency.

B. Pre-installation Test Reports: For pre-installation soil analyses specified in "Pre-installation Testing" refer to 1.10 of this section.

C. Maintenance Instructions: Recommended procedures to be established by Owner for maintenance of plants during a calendar year. Submit before start of required maintenance periods.

D. Field quality-control reports.

1.9 QUALITY ASSURANCE

A. Testing Agency Qualifications: An independent, state-operated, or university-operated laboratory; experienced in soil science, soil testing, and plant nutrition; with the experience and capability to conduct the testing indicated; and that specializes in types of tests to be performed.

1. Laboratories: Subject to compliance with requirements, provide testing by one of the following:

   a. University of Connecticut Soil Nutrient Analysis Laboratory, 6 Sherman Place, Unit 5102, Storrs, CT 06269-5102. Phone: 860-486-4274.

   b. Gregory Bugbee Slate Laboratory The Connecticut Agricultural Experiment Station; 123 Huntington Street P.O. Box 1106 New Haven, CT 06504. Phone: 203-974-8521.

   c. Valley Laboratory The Connecticut Agricultural Experiment Station; 153 Cook Hill Road Box 248 Windsor, CT 06095-0248; Phone: 860-683-4977

   d. Approved Equal.

2. Multiple Laboratories: At Contractor's option, work may be divided among qualified testing laboratories specializing in physical testing, chemical testing, and fertility testing.

1.10 PRE-INSTALLATION TESTING

A. Pre-installation Testing Service: Owner will engage a qualified testing agency to perform pre-installation soil analyses on existing stockpiled soil.

1. Notify Landscape Architect seven (7) days in advance of the dates and times when laboratory samples will be taken.

B. Pre-installation Soil Analyses: For each unamended soil type (both imported topsoil and existing stockpile), perform testing on soil samples and furnish soil analysis and a written report containing soil-amendment and fertilizer recommendations by a qualified testing agency performing the testing according to "Soil-Sampling Requirements" and "Testing Requirements" articles.

1. Have testing agency identify and label samples and test reports according to sample collection and labeling requirements.

1.11 SOIL-SAMPLING REQUIREMENTS

A. General: Extract soil samples according to requirements in this article.

B. Sample Collection and Labeling: Have samples taken and labeled by state-certified soil scientist under the direction of the testing agency.

1. Number and Location of Samples: Minimum of three (3) representative soil samples from varied locations for each soil to be used or amended for landscaping purposes.
2. Procedures and Depth of Samples: According to USDA-NRCS's "Field Book for Describing and Sampling Soils.
3. Division of Samples: Split each sample into two, equal parts. Send half to the testing agency and half to Owner for its records.
4. Labeling: Label each sample with the date, location keyed to a site plan or other location system, visible soil condition, and sampling depth.

1.12 TESTING REQUIREMENTS

A. General: Perform tests on soil samples according to requirements in this article.

B. Physical Testing:

1. Soil Texture: Soil-particle, size-distribution analysis by one of the following methods according to SSSA's "Methods of Soil Analysis - Part 1-Physical and Mineralogical Methods":

a. Sieving Method: Report sand-gradation percentages for very coarse, coarse, medium, fine, and very fine sand; and fragment-gradation (gravel) percentages for fine, medium, and coarse fragments; according to USDA sand and fragment sizes.
b. Hydrometer Method: Report percentages of sand, silt, and clay.

2. Total Porosity: Calculate using particle density and bulk density according to SSSA's "Methods of Soil Analysis - Part 1-Physical and Mineralogical Methods."
3. Water Retention: According to SSSA's "Methods of Soil Analysis - Part 1-Physical and Mineralogical Methods."
4. Saturated Hydraulic Conductivity: According to SSSA's "Methods of Soil Analysis - Part 1-Physical and Mineralogical Methods" at 85% compaction according to ASTM D 698 (Standard Proctor).

C. Chemical Testing:

1. CEC: Analysis by sodium saturation at pH 7 according to SSSA's "Methods of Soil Analysis - Part 3- Chemical Methods."

2. Clay Mineralogy: Analysis and estimated percentage of expandable clay minerals using CEC by ammonium saturation at pH 7 according to SSSA's "Methods of Soil Analysis - Part 1- Physical and Mineralogical Methods."
3. Metals Hazardous to Human Health: Test for presence and quantities of RCRA metals including aluminum, arsenic, barium, copper, cadmium, chromium, cobalt, lead, lithium, and vanadium. If RCRA metals are present, include recommendations for corrective action.
4. Phytotoxicity: Test for plant-available concentrations of phytotoxic minerals including aluminum, arsenic, barium, cadmium, chlorides, chromium, cobalt, copper, lead, lithium, mercury, nickel, selenium, silver, sodium, strontium, tin, titanium, vanadium, and zinc.

D. Fertility Testing: Soil-fertility analysis according to standard laboratory protocol of SSSA NAPT NEC-67, including the following:

1. Percentage of organic matter.
2. CEC, calcium percent of CEC, and magnesium percent of CEC.
3. Soil reaction (acidity/alkalinity pH value).
4. Buffered acidity or alkalinity.
5. Nitrogen ppm.
6. Phosphorous ppm.
7. Potassium ppm.
8. Manganese ppm.
9. Manganese-availability ppm.
10. Zinc ppm.
11. Zinc availability ppm.
12. Copper ppm.
13. Sodium ppm and sodium absorption ratio.
14. Soluble-salts ppm.
15. Presence and quantities of problem materials including salts and metals cited in the Standard protocol. If such problem materials are present, provide additional recommendations for corrective action.
16. Other deleterious materials, including their characteristics and content of each.

E. Organic-Matter Content: Analysis using loss-by-ignition method according to SSSA's "Methods of Soil Analysis - Part 3- Chemical Methods."

F. Recommendations: Based on the test results, state recommendations for soil treatments and soil amendments to be incorporated to produce satisfactory planting soil suitable for healthy, viable plants indicated. Include, at a minimum, recommendations for nitrogen, phosphorous, and potassium fertilization, and for micronutrients.

1. Fertilizers and Soil Amendment Rates: State recommendations in weight per 1000 sq. ft. (100 sq. m) for 6-inch (150-mm) depth of soil.
2. Soil Reaction: State the recommended liming rates for raising pH or sulfur for lowering pH according to the buffered acidity or buffered alkalinity in weight per 1000 sq. ft. (100 sq. m) for 6-inch (150-mm) depth of soil.

1.13 DELIVERY, STORAGE, AND HANDLING

A. Packaged Materials: Deliver packaged materials in original, unopened containers showing weight, certified analysis, name and address of manufacturer, and compliance with state and Federal laws if applicable.

B. Bulk Materials:

1. Do not dump or store bulk materials near structures, utilities, walkways and pavements, or on existing turf areas or plants.
2. Provide erosion-control measures to prevent erosion or displacement of bulk materials, discharge of soil-bearing water runoff, and airborne dust reaching adjacent properties, water conveyance systems, or walkways.
3. Do not move or handle materials when they are wet or frozen.
4. Accompany each delivery of bulk fertilizers and soil amendments with appropriate certificates.

C. Stockpiling:

1. Do not dump or store bulk materials near structures, utilities, walkways and pavements, or on existing turf areas or plants.
2. During the project rainy season, cover non-active soil stockpiles and contain them within temporary perimeter sediment barriers, such as berms, dikes, silt fences, or sandbag barriers. A soil stabilization measure may be used in lieu of cover.
3. During the non-rainy season prior to the onset of rain, either cover non-active stockpiles or protect them with temporary perimeter sediment barriers.
4. Year-round, active soil stockpiles are to be protected with temporary linear sediment barriers prior to the onset of rain.
5. Do not move or handle materials when they are wet or frozen.

1.14 PROJECT CONDITIONS

A. Field Measurements: Verify actual grade elevations, service and utility locations, irrigation system components, and dimensions of soil type areas and construction contiguous with soil preparation by field measurements before proceeding with soil preparation work.

B. Interruption of Existing Services or Utilities: Do not interrupt services or utilities to facilities occupied by Owner or others unless permitted under the following conditions and then only after arranging to provide temporary services or utilities according to requirements indicated:

1. Notify Architect, Construction Manager, and Owner no fewer than two (2) days in advance of proposed interruption of each service or utility.
2. Do not proceed with interruption of services or utilities without Owner's written permission.

PART 2 - PRODUCTS

2.1 MATERIALS

A. Regional Materials: Imported Topsoil, Sand, organic mulch, and soil amendments and fertilizers shall be manufactured within 500 miles (800 km) of Project site from materials that have been extracted, harvested, or recovered, as well as manufactured, within 500 miles (800 km) of Project site.

2.2 PLANTING SOILS SPECIFIED BY COMPOSITION

A. General: Soil amendments, fertilizers, and rates of application specified in this article are guidelines that may need revision based on testing laboratory's recommendations after pre-installation soil analyses are performed.

B. Amended Soil: Existing, on-site surface soil, with the duff layer, if any, retained and stockpiled on-site; mixed with 1/3 unamended Imported Topsoil and modified to produce viable planting soil.

1. Unacceptable Properties: Clean soil of the following:

a. Unacceptable Materials: Concrete slurry, concrete layers or chunks, cement, plaster, building debris, oils, gasoline, diesel fuel, paint thinner, turpentine, tar, roofing compound, acid, and other extraneous materials that are harmful to plant growth.
b. Unsuitable Materials: Stones, roots, plants, sod, clay lumps, and pockets of coarse sand that exceed a combined maximum of eight (8) percent by dry weight of the imported soil.
c. Large Materials: Stones, clods, roots, clay lumps, and pockets of coarse sand exceeding 2 inches (50 mm) in any dimension.

2. Amended Soil Composition: Blend imported topsoil, unamended soil with the following soil amendments and fertilizers in the quantities based on the results of the soil test report to produce planting soil:

a. Compost
b. Muck Peat
c. Wood Derivatives
d. Lime
e. Sulfur
f. Agricultural Gypsum
g. Superphosphate
h. Commercial Fertilizer
i. Slow-Release Fertilizer

C. Imported Topsoil: Imported, naturally formed soil from off-site sources and consisting of sandy loam or loam soil according to USDA textures; and modified to produce viable planting soil.

1. Sources: Take imported, unamended soil from sources that are naturally well-drained sites where topsoil occurs at least 4 inches (100 mm) deep, not from agricultural land, bogs, or marshes; and that do not contain undesirable organisms; disease-causing plant pathogens; or obnoxious weeds and invasive plants including, but not limited to, quackgrass, Johnsongrass, poison ivy, nutsedge, nimblewill, Canada thistle, bindweed, bentgrass, wild garlic, ground ivy, perennial sorrel, and bromegrass.
2. Additional Properties of Imported Soil before Amending: Soil reaction of pH 6 to 7 and minimum of four (4) percent organic-matter content, friable, and with sufficient structure to give good tilth and aeration.
3. Unacceptable Properties: Clean soil of the following:

    a. Unacceptable Materials: Concrete slurry, concrete layers or chunks, cement, plaster, building debris, oils, gasoline, diesel fuel, paint thinner, turpentine, tar, roofing compound, acid, and other extraneous materials that are harmful to plant growth.
    b. Unsuitable Materials: Stones, roots, plants, sod, clay lumps, and pockets of coarse sand that exceed a combined maximum of eight (8) percent by dry weight of the imported soil.
    c. Large Materials: Stones, clods, roots, clay lumps, and pockets of coarse sand exceeding 2 inches (50 mm) in any dimension.

4. Imported Topsoil Composition: Blend imported topsoil with the following soil amendments and fertilizers in the quantities based on the results of the soil test report to produce planting soil:

    a. Compost
    b. Muck Peat
    c. Wood Derivatives
    d. Lime
    e. Sulfur
    f. Agricultural Gypsum
    g. Superphosphate
    h. Commercial Fertilizer
    i. Slow-Release Fertilizer

2.3 INORGANIC SOIL AMENDMENTS

A. Lime: ASTM C 602, agricultural liming material containing a minimum of 80 percent calcium carbonate equivalent and as follows:

1. Class: T, with a minimum of 99 percent passing through a No. 8 (2.36-mm) sieve and a minimum of 75 percent passing through a No. 60 (0.25-mm) sieve.
2. Class: O, with a minimum of 95 percent passing through a No. 8 (2.36-mm) sieve and a minimum of 55 percent passing through a No. 60 (0.25-mm) sieve.
3. Form: Provide lime in form of ground dolomitic limestone.

B. Sulfur: Granular, biodegradable, and containing a minimum of 90 percent elemental sulfur, with a minimum of 99 percent passing through a No. 6 (3.35-mm) sieve and a maximum of 10 percent passing through a No. 40 (0.425-mm) sieve.

C. Iron Sulfate: Granulated ferrous sulfate containing a minimum of 20 percent iron and 10 percent sulfur.

D. Perlite: Horticultural perlite, soil amendment grade.

E. Agricultural Gypsum: Minimum 90 percent calcium sulfate, finely ground with 90 percent passing through a No. 50 (0.30-mm) sieve.

F. Sand: Clean, washed, natural or manufactured, free of toxic materials, and according to ASTM C 33/C 33M

2.4 ORGANIC SOIL AMENDMENTS

A. Compost: Well-composted, stable, and weed-free organic matter produced by composting feedstock, and bearing USCC's "Seal of Testing Assurance," and as follows:

1. Feedstock: May include animal waste
2. Reaction: pH of 5.5 to 8 .
3. Soluble-Salt Concentration: Less than 4 dS/m.
4. Moisture Content: 35 to 55 percent by weight.
5. Organic-Matter Content: 30 to 40 percent of dry weight.
6. Particle Size: Minimum of 98 percent passing through a 2-inch sieve.

B. Sphagnum Peat: Partially decomposed sphagnum peat moss, finely divided or of granular texture with 100 percent passing through a 1/2-inch (13-mm) sieve, a pH of 3.4 to 4.8, and a soluble-salt content measured by electrical conductivity of maximum 5 dS/m.

C. Muck Peat: Partially decomposed moss peat, native peat, or reed-sedge peat, finely divided or of granular texture with 100 percent passing through a 1/2-inch (13-mm) sieve, a pH of 6 to 7.5, a soluble-salt content measured by electrical conductivity of maximum 5 dS/m, having a water-absorbing capacity of 1100 to 2000 percent, and containing no sand.

D. Wood Derivatives: Shredded and composted, nitrogen-treated sawdust, ground bark, or wood waste; of uniform texture and free of chips, stones, sticks, soil, or toxic materials.

1. Partially Decomposed Wood Derivatives: In lieu of shredded and composted wood derivatives, mix shredded and partially decomposed wood derivatives with ammonium nitrate at a minimum rate of 0.15 lb/cu. ft. (2.4 kg/cu. M0 of loose sawdust or ground bark, or with ammonium sulfate at a minimum rate of 0.25 lb/cu. ft. (4 kg/cu. M) of loose sawdust or ground bark.

E. Manure: Well-rotted, unleached, stable or cattle manure containing not more than 25 percent by volume of straw, sawdust, or other bedding materials; free of toxic substances, stones, sticks, soil, weed seed, debris, and material harmful to plant growth.

2.5 FERTILIZERS

A. Superphosphate: Commercial, phosphate mixture, soluble; a minimum of 33 percent available phosphoric acid.

B. Commercial Fertilizer: Commercial-grade complete fertilizer of neutral character, consisting of fast- and slow-release nitrogen, 50 percent derived from natural organic sources of urea formaldehyde, phosphorous, and potassium in the following composition:

1. Composition: 1 lb/1000 sq. ft. (0.5 kg/100 sq. m) of actual nitrogen, 4 percent phosphorous, and 2 percent potassium, by weight.
2. Composition: Nitrogen, phosphorous, and potassium in amounts recommended in soil reports from a qualified testing agency.

C. Slow-Release Fertilizer: Granular or pelleted fertilizer consisting of 50 percent water-insoluble nitrogen, phosphorus, and potassium in the following composition:

1. Composition: 20 percent nitrogen, 10 percent phosphorous, and 10 percent potassium, by weight.
2. Composition: Nitrogen, phosphorous, and potassium in amounts recommended in soil reports from a qualified testing agency.

D. Chelated Iron: Commercial-grade FeEDDHA for dicots and woody plants, and commercial-grade FeDTPA for ornamental grasses and monocots.

2.6 SOIL SHRINKAGE

A. Based on tested water content of soils, soil shrinkage shall be analyzed and additional volume of soil will be provided by the contractor to meet soil volumes required to meet site grading, at no additional cost to the owner.

2.7 INTERCONNECTED STRUCTURAL SOIL CELL

A. Description: Load bearing, recycled engineered plastic module with vertical and lateral interlocks, for creating void space beneath pavements.
1. Material: Advanced glass reinforced polymer
2. Loading capacity: Vehicular or 600Kpa vertical load
3. Capacity: Above or equal to 94% free volume for root growth
4. Manufactured by CityGreen Urban Landscape Solutions, 24A Corydon Place, Cambridge On N1R 7L5, CANADA, Or Approved Equal

2.8 GEOCOMPOSITE SEPARATION FABRIC

A. Composite of a laid geogrid made of stretched, monolithic polypropylene (PP) flat bars welded junctions and a mechanical bonded filter geotextile welded within the geogrid structure, used for reinforcement

1. Manufactured by CityGreen Urban Landscape Solutions, 24A Corydon Place, Cambridge On N1R 7L5, CANADA
2. Or Approved Equal

2.9 SAND

A. Dry screened sand,

PART 3 - EXECUTION

3.1 GENERAL

A. Place planting soil and fertilizers according to requirements in other Specification Sections.

B. Verify that no foreign or deleterious material or liquid such as paint, paint washout, concrete slurry, concrete layers or chunks, cement, plaster, oils, gasoline, diesel fuel, paint thinner, turpentine, tar, roofing compound, or acid has been deposited in planting soil.

C. Proceed with placement only after unsatisfactory conditions have been corrected.

3.2 PREPARATION OF UNAMENDED, ON-SITE SOIL BEFORE AMENDING

A. Excavation: Excavate soil from designated area(s) as directed by Engineer and stockpile until amended.

B. Unacceptable Materials: Clean soil of concrete slurry, concrete layers or chunks, cement, plaster, building debris, oils, gasoline, diesel fuel, paint thinner, turpentine, tar, roofing compound, acid, and other extraneous materials that are harmful to plant growth.

C. Unsuitable Materials: Clean soil to contain a maximum of 8 percent by dry weight of stones, roots, plants, sod, clay lumps, and pockets of coarse sand.

D. Screening: Pass unamended soil through a 2-inch (50-mm) sieve to remove large materials.

3.3 PLACING AND MIXING PLANTING SOIL OVER EXPOSED SUBGRADE

A. General: Apply and mix unamended soil with amendments on-site to produce required planting soil. Do not apply materials or till if existing soil or subgrade is frozen, muddy, or excessively wet.

B. Subgrade Preparation: Till subgrade to a minimum depth of 6 inches (150 mm). Remove stones larger than 2 inches (50 mm) in any dimension and sticks, roots, rubbish, and other extraneous matter and legally dispose of them off Owner's property.

1. Apply, add soil amendments, and mix approximately half the thickness of unamended soil over prepared, loosened subgrade according to "Mixing" Paragraph below. Mix thoroughly into top 2 inches (50 mm) of subgrade. Spread remainder of planting soil.

C. Mixing: Spread unamended soil to total depth indicated on Drawings but not less than required to meet finish grades after mixing with amendments and natural settlement. Do not spread if soil or subgrade is frozen, muddy, or excessively wet.

1. Amendments: Apply soil amendments and fertilizer, if required, evenly on surface, and thoroughly blend them with unamended soil to produce planting soil.

a. Mix lime and sulfur with dry soil before mixing fertilizer.
b. Mix fertilizer with planting soil no more than seven days before planting.

2. Lifts: Apply and mix unamended soil and amendments in lifts not exceeding 12 inches (200 mm) in loose depth for material compacted by compaction equipment, and not more than 6 inches (150 mm) in loose depth for material compacted by hand-operated tampers.

D. Compaction: Compact each blended lift of planting soil to 75 to 82 percent of maximum Standard Proctor density according to ASTM D 698 and tested in-place.

E. Finish Grading: Grade planting soil to a smooth, uniform surface plane with loose, uniformly fine texture. Roll and rake, remove ridges, and fill depressions to meet finish grades.

3.4 FIELD QUALITY CONTROL

A. Testing Agency: Owner will engage a qualified testing agency to perform tests and inspections.

B. Perform the following tests:

1. Compaction: Test planting-soil compaction after placing each lift and at completion using a densitometer or soil-compaction meter calibrated to a reference test value based on laboratory testing according to ASTM D 698. Space tests at no less than one for each 1000 sq. ft. (100 sq. m) of in-place soil or part thereof.

C. Soil will be considered defective if it does not pass tests.

D. Prepare test reports.

E. Label each sample and test report with the date, location keyed to a site plan or other location system, visible conditions when and where sample was taken, and sampling depth.

3.5 PROTECTION

A. Protection Zone: Identify protection zones according to Section 015639 "Temporary Tree and Plant Protection."

B. Protect areas of in-place soil from additional compaction, disturbance, and contamination. Prohibit the following practices within these areas except as required to perform planting operations:

1. Storage of construction materials, debris, or excavated material.
2. Parking vehicles or equipment.
3. Vehicle traffic.
4. Foot traffic.
5. Erection of sheds or structures.
6. Impoundment of water.
7. Excavation or other digging unless otherwise indicated.

C. If planting soil or subgrade is over-compacted, disturbed, or contaminated by foreign or deleterious materials or liquids, remove the planting soil and contamination; restore the subgrade as directed by Architect and replace contaminated planting soil with new planting soil.

3.6 CLEANING

A. Protect areas adjacent to planting-soil preparation and placement areas from contamination. Keep adjacent paving and construction clean and work area in an orderly condition.

B. Remove surplus soil and waste material including excess subsoil, unsuitable materials, trash, and debris and legally dispose of them off Owner's property unless otherwise indicated.

1. Dispose of excess subsoil and unsuitable materials on-site where directed by Owner.

END OF SECTION 329113

SECTION 32 91 19 FINE GRADING

PART 1- GENERAL

1.1 RELATED DOCUMENTS

A. Drawings and general provisions of the Contract, including General and Supplementary Conditions and Division 1 Specification Sections, apply to this Section.

B. LEED BUILDING GENERAL REQUIREMENTS:
   1. Implement practices and procedures to meet the project's environmental goals, which include achieving a LEED™ 2009 New Construction Silver rating. Specific project goals which may impact this and the other sections of this specification include: use of recycled-content materials; use of locally-manufactured materials; use of low-emitting materials; use of certified wood products; construction waste recycling; and the implementation of a construction indoor air quality management plan. Ensure that the requirements related to these goals, as defined in this Section and other Sections of the contract documents, are implemented to the fullest extent. Substitutions or other changes to the work shall not be allowed if such changes substantially compromise the stated LEED Building criteria.
   2. Comply with LEED (Leadership in Energy and Environmental Design) Green Building Rating System BD+C, Version 3, Silver.

1.2 SUMMARY

A. Provide labor, materials, equipment, services and transportation to complete work.

   1. Fine Grading.

1.3 REFERENCES

A. Comply with applicable requirements of:

   1. State of Connecticut, Department of Transportation, Standard Specification for Road and Bridge Construction, latest edition.

1.4 QUALITY ASSURANCE

A. Qualifications: Contractor shall have minimum five years experience in fine grading.

B. Pre-Installation Conference: Convene a meeting with Owner's Representative present prior to start of fine grading.

1.5 PROJECT/SITE CONDITIONS

A. Environmental Requirements: do not deliver, handle or place soils when dry, wet, or frozen.

   1. Field Test

a. Form soil in palm of hand, if soil retains shape and crumbles upon touching, soil may be worked.

b. If the soil will not retain shape it is too dry and should not be worked.

c. If the soil retains shape and will not crumble, it is too wet and should not be worked.

1.6 SEQUENCING AND SCHEDULING

A. Fine Grading

1. Finish grade after soil preparation is accepted and prior to sodding and planting.

PART 2 - MATERIALS

2.1 PLANTING SOILS

A. Conform to the requirements of Section 02932 – Planting Soils.

2.2 EQUIPMENT

A. Fine Grading: Grading Tractor or other approved equipment.

PART 3 - EXECUTION

3.1 EXAMINATION

A. Verification of Conditions: in the event field conditions are not in conformance with the Contact Documents, notify Owner's Representative in writing.

1. Spot and Invert Elevations: verify field elevations of site improvements such as drainage and utility fixtures, pavements, curbs, and subsurface piping conforms to Drawings.

3.2 PREPARATION

A. Protection:

1. Prior to fine grading operations, field locate and protect from damage site improvements such as drainage and utility fixtures, pavements, site furnishings, and curbs.

2. Dust Control: upon acceptance of soil preparation provide dust control.

3. Agricultural Chemicals: protect site improvements from contact with agricultural chemicals, soil amendments, and fertilizers.

4. Protect benchmarks.

3.3 FINISH GRADING

A. Subgrade: top of subgrade to be parallel to finish grade and of uniform depth with the finish grade.

B. Positive Drainage: provide free and uninterrupted flow of surface waters without erosion.

C. Gradients: finish grade between spot elevations and between contours shall be constant. Eliminate mounds and depressions.

D. Slope: finish grade shall be smooth with gradual transitions between top and toe of slopes.

E. Tolerances: +0.05' to -0.05' of grades shown on the drawings.

F. Contours: follow contours shown on drawings to shape and trim the soil surface.

G. Maintain levels, profiles, and contours of rough grades.

H. Removal: clear stones, roots, weeds, and debris while grading landscape soil materials. Rake surface clean of stones 1" or larger and debris.

3.4 FIELD QUALITY CONTROL

A. Notify Owner's Representative upon completion of fine grading. Owner's Representative shall review the work for conformance to Contract Documents and if the work is approved, subsequent lawn and planting work shall proceed.

B. Soil compaction at moisture content near field capacity based on measurements with a CL 700 pocket penetrometer shall not exceed 2.5 tons per square foot.

3.5 ADJUSTING

A. Repair and re-establish grades in settled, eroded, and damaged areas.

B. Where completed areas are disturbed by construction operations or adverse weather, and regrade.

3.6 CLEANING

A. Clean up debris generated under work of this section.

B. Site Improvements

1. Wash and sweep clean site improvements such a as drainage and utility fixtures, pavements, existing plantings, and site furnishings.

3.7 PROTECTION

A. Protect work of this section until Final Acceptance.

B. Protect prepared soils from compaction by construction traffic and from contamination by construction materials.

END OF SECTION 32-9119

SECTION 329200 – TURF AND GRASSES

PART 1 - GENERAL

1.1 RELATED DOCUMENTS

A. Drawings and general provisions of the Contract, including General and Supplementary Conditions and Division 01 Specification Sections, apply to this Section.

B. LEED BUILDING GENERAL REQUIREMENTS:
   1. Implement practices and procedures to meet the project's environmental goals, which include achieving a LEED™ 2009 New Construction Silver rating. Specific project goals which may impact this and the other sections of this specification include: use of recycled-content materials; use of locally-manufactured materials; use of low-emitting materials; use of certified wood products; construction waste recycling; and the implementation of a construction indoor air quality management plan. Ensure that the requirements related to these goals, as defined in this Section and other Sections of the contract documents, are implemented to the fullest extent. Substitutions or other changes to the work shall not be allowed if such changes substantially compromise the stated LEED Building criteria.
   2. Comply with LEED (Leadership in Energy and Environmental Design) Green Building Rating System BD+C, Version 3, Silver.

1.2 SUMMARY

A. Section Includes:

   1. Seeding.
   2. Hydroseeding.
   3. Sodding.

B. Related Sections:

   1. Division 31 Section "Site Clearing" for topsoil stripping and stockpiling.
   2. Division 31 Section "Earth Moving" for excavation, filling and backfilling, and rough grading.
   3. Division 32 Section "Porous Unit Paving" for concrete grid-type pavers shaped to provide open areas between units, planted with grass or other plants.
   4. Division 32 Section "Plants" for border edgings.
   5. Division 32 Section "Soil Preparation" for soil types, soil amendments, fertilizers, compost and sand.
   6. Division 33 Section "Subdrainage" for subsurface drainage.

Conformed Set - May 29, 2015

1.3 DEFINITIONS

A. Duff Layer: The surface layer of native topsoil that is composed of mostly decayed leaves, twigs, and detritus.

B. Finish Grade: Elevation of finished surface of planting soil.

C. Manufactured Topsoil: Soil produced off-site by homogeneously blending mineral soils or sand with stabilized organic soil amendments to produce topsoil or planting soil.

D. Pesticide: A substance or mixture intended for preventing, destroying, repelling, or mitigating a pest. This includes insecticides, miticides, herbicides, fungicides, rodenticides, and molluscicides. It also includes substances or mixtures intended for use as a plant regulator, defoliant, or desiccant.

E. Pests: Living organisms that occur where they are not desired or that cause damage to plants, animals, or people. These include insects, mites, grubs, mollusks (snails and slugs), rodents (gophers, moles, and mice), unwanted plants (weeds), fungi, bacteria, and viruses.

F. Subgrade: Surface or elevation of subsoil remaining after excavation is complete, or top surface of a fill or backfill before planting soil is placed.

G. Subsoil: All soil beneath the topsoil layer of the soil profile, and typified by the lack of organic matter and soil organisms.

H. Surface Soil: Soil that is present at the top layer of the existing soil profile at the Project site. In undisturbed areas, the surface soil is typically topsoil, but in disturbed areas such as urban environments, the surface soil can be subsoil.

1.4 ACTION SUBMITTALS

A. Product Data: For each type of product indicated.

1. Pesticides and Herbicides: Include product label and manufacturer's application instructions specific to this Project.

1.5 INFORMATIONAL SUBMITTALS

A. Certification of Grass Seed: From seed vendor for each grass-seed monostand or mixture stating the botanical and common name, percentage by weight of each species and variety, and percentage of purity, germination, and weed seed. Include the year of production and date of packaging.

1. Certification of each seed mixture for turfgrass sod. Include identification of source and name and telephone number of supplier.

B. Qualification Data: For qualified landscape Installer.

C. Product Certificates: For soil amendments and fertilizers, from manufacturer.

D. Material Test Reports: For standardized ASTM D 5268 topsoil existing native surface topsoil existing in-place surface soil and imported or manufactured topsoil.

E. Maintenance Instructions: Recommended procedures to be established by Owner for maintenance of turf during a calendar year. Submit before expiration of required initial maintenance periods.

1.6 QUALITY ASSURANCE

A. Installer Qualifications: A qualified landscape Installer whose work has resulted in successful turf establishment.

1. Professional Membership: Installer shall be a member in good standing of either the Professional Landcare Network or the American Nursery and Landscape Association.
2. Experience: Five years' experience in turf installation in addition to requirements in Division 01 Section "Quality Requirements."
3. Installer's Field Supervision: Require Installer to maintain an experienced full-time supervisor on Project site when work is in progress.
4. Maintenance Proximity: Not more than two hours' normal travel time from Installer's place of business to Project site.
5. Pesticide Applicator: State licensed, commercial.

B. Soil-Testing Laboratory Qualifications: An independent laboratory or university laboratory, recognized by the State Department of Agriculture, with the experience and capability to conduct the testing indicated and that specializes in types of tests to be performed.

C. Soil Analysis: For each unamended soil type, furnish soil analysis and a written report by a qualified soil-testing laboratory stating percentages of organic matter; gradation of sand, silt, and clay content; cation exchange capacity; sodium absorption ratio; deleterious material; pH; and mineral and plant-nutrient content of the soil.

1. Testing methods and written recommendations shall comply with USDA's Handbook No. 60.
2. The soil-testing laboratory shall oversee soil sampling, with depth, location, and number of samples to be taken per instructions from Architect. A minimum of three representative samples shall be taken from varied locations for each soil to be used or amended for planting purposes.
3. Report suitability of tested soil for turf growth.

   a. Based on the test results, state recommendations for soil treatments and soil amendments to be incorporated. State recommendations in weight per 1000 sq. ft. or volume per cu. yd. for nitrogen, phosphorus, and potash nutrients and soil amendments to be added to produce satisfactory planting soil suitable for healthy, viable plants.
   b. Report presence of problem salts, minerals, or heavy metals, including aluminum, arsenic, barium, cadmium, chromium, cobalt, lead, lithium, and vanadium. If such

problem materials are present, provide additional recommendations for corrective action.

1.7 DELIVERY, STORAGE, AND HANDLING

A. Seed and Other Packaged Materials: Deliver packaged materials in original, unopened containers showing weight, certified analysis, name and address of manufacturer, and indication of conformance with state and federal laws, as applicable.

B. Sod: Harvest, deliver, store, and handle sod according to requirements in "Specifications for Turfgrass Sod Materials" and "Specifications for Turfgrass Sod Transplanting and Installation" in TPI's "Guideline Specifications to Turfgrass Sodding." Deliver sod in time for planting within 24 hours of harvesting. Protect sod from breakage and drying.

C. Bulk Materials:

1. Do not dump or store bulk materials near structures, utilities, walkways and pavements, or on existing turf areas or plants.
2. Provide erosion-control measures to prevent erosion or displacement of bulk materials, discharge of soil-bearing water runoff, and airborne dust reaching adjacent properties, water conveyance systems, or walkways.
3. Accompany each delivery of bulk fertilizers, lime, and soil amendments with appropriate certificates.

1.8 PROJECT CONDITIONS

A. Planting Restrictions: Plant during one of the following periods. Coordinate planting periods with initial maintenance periods to provide required maintenance from date of Substantial Completion

B. Seeding Season

1. Spring Planting: April 15 to June 1
2. Fall Planting: September 1 to October 15

C. Sod Installation Season

1. Spring: April 15 to July 15
2. Fall: August 15 to November 1

D. Weather Limitations: Proceed with planting only when existing and forecasted weather conditions permit planting to be performed when beneficial and optimum results may be obtained. Apply products during favorable weather conditions according to manufacturer's written instructions.

1.9 MAINTENANCE SERVICE

A. Initial Turf Maintenance Service: Provide full maintenance by skilled employees of landscape Installer. Maintain as required in Part 3. Begin maintenance immediately after each area is planted and continue until acceptable turf is established but for not less than the following periods:

1. Seeded Turf: 90 days from date of Substantial Completion

a. When initial maintenance period has not elapsed before end of planting season, or if turf is not fully established, continue maintenance during next planting season.

2. Sodded Turf: 60 days from date of Substantial Completion

PART 2 - PRODUCTS

2.1 SEED

A. Grass Seed: Fresh, clean, dry, new-crop seed complying with AOSA's "Journal of Seed Technology; Rules for Testing Seeds" for purity and germination tolerances.

B. Seed Species: State-certified seed of grass species as follows:

1. Full Sun:
30% Creeping Red Fescue (2 - improved varieties)
30% Perennial Ryegrass (2 improved, grey leaf spot resistant varieties)
20% Kentucky bluegrass (1 improved, Mid Atlantic type)
20% Kentucky bluegrass (1 improved elite type)

2. Shade:
30% Hard fescue (2 - improved varieties)
20% Kentucky bluegrass (2-improved, shade tolerant varieties)**
20% Creeping Red Fescue (2 -improved varieties)
20% Chewings Fescue (2 - improved varieties)
10% Perennial Ryegrass (improved, grey leaf spot resistant varieties)

2.2 TURFGRASS SOD

A. Turfgrass Sod: Certified complying with "Specifications for Turfgrass Sod Materials" in TPI's "Guideline Specifications to Turfgrass Sodding." Furnish viable sod of uniform density, color, and texture, strongly rooted, and capable of vigorous growth and development when planted.

B. Turfgrass Species: Closely match seed species above or 70/30 Blend Available from winding Brook Turf Farm, Wethersfield, CT http://www.windingbrookturf.net/

30% Lacrosse Chewings Fescue
20% Excursion Kentucky Bluegrass
20% Shamrock Kentucky Bluegrass
15% Diva Kentucky Bluegrass
15% Sudden Impact Kentucky Bluegrass

2.3 LAWN ROOT ZONE MEDIUM

A. Base Loam, Sand and Compost, each as specified above, shall be combined in an approximate mix ratio of one and one half parts by volume Sand to one part by volume Base Loam to one part by volume Compost (1.5S:1L:1C) to create a uniform blend which meets the following requirements.

B. Gradation for Material Passing the Number 10 Sieve

U.S. Sieve Size Number	Percent Passing Minimum	Maximum
10	100	-
18	70	90
35	48	74
60	32	52
140	20	26
270	15	18
0.002mm	2	5

2.4 MULCHES

A. Straw Mulch: Provide air-dry, clean, mildew- and seed-free, salt hay or threshed straw of wheat, rye, oats, or barley.

B. Sphagnum Peat Mulch: Partially decomposed sphagnum peat moss, finely divided or of granular texture, and with a pH range of 3.4 to 4.8.

C. Muck Peat Mulch: Partially decomposed moss peat, native peat, or reed-sedge peat, finely divided or of granular texture, with a pH range of 6 to 7.5, and having a water-absorbing capacity of 1100 to 2000 percent.

D. Fiber Mulch: Biodegradable, dyed-wood, cellulose-fiber mulch; nontoxic and free of plant-growth or germination inhibitors; with a maximum moisture content of 15 percent and a pH range of 4.5 to 6.5.

2.5 PESTICIDES

A. General: Pesticide, registered and approved by EPA, acceptable to authorities having jurisdiction, and of type recommended by manufacturer for each specific problem and as required for Project conditions and application. Do not use restricted pesticides unless authorized in writing by authorities having jurisdiction.

B. Pre-Emergent Herbicide (Selective and Non-Selective): Effective for controlling the germination or growth of weeds within planted areas at the soil level directly below the mulch layer.

C. Post-Emergent Herbicide (Selective and Non-Selective): Effective for controlling weed growth that has already germinated.

2.6 EROSION-CONTROL MATERIALS

A. Erosion-Control Blankets: Biodegradable wood excelsior, straw, or coconut-fiber mat enclosed in a photodegradable plastic mesh. Include manufacturer's recommended steel wire staples, 6 inches long.

PART 3 - EXECUTION

3.1 EXAMINATION

A. Examine areas to be planted for compliance with requirements and other conditions affecting performance.

1. Verify that no foreign or deleterious material or liquid such as paint, paint washout, concrete slurry, concrete layers or chunks, cement, plaster, oils, gasoline, diesel fuel, paint thinner, turpentine, tar, roofing compound, or acid has been deposited in soil within a planting area.
2. Do not mix or place soils and soil amendments in frozen, wet, or muddy conditions.
3. Suspend soil spreading, grading, and tilling operations during periods of excessive soil moisture until the moisture content reaches acceptable levels to attain the required results.
4. Uniformly moisten excessively dry soil that is not workable and which is too dusty.

B. Proceed with installation only after unsatisfactory conditions have been corrected.

C. If contamination by foreign or deleterious material or liquid is present in soil within a planting area, remove the soil and contamination as directed by Architect and replace with new planting soil.

3.2 PREPARATION

A. Protect structures, utilities, sidewalks, pavements, and other facilities, trees, shrubs, and plantings from damage caused by planting operations.

1. Protect adjacent and adjoining areas from hydroseeding and hydromulching overspray.
2. Protect grade stakes set by others until directed to remove them.

B. Install erosion-control measures to prevent erosion or displacement of soils and discharge of soil-bearing water runoff or airborne dust to adjacent properties and walkways.

3.3 TURF AREA PREPARATION

A. Limit turf subgrade preparation to areas to be planted.

B. Hand-dig or air spade in all areas under the drip line of existing trees.

C. Newly Graded Subgrades: Loosen subgrade to a minimum depth of 8 inches. Remove stones larger than 1 inch in any dimension and sticks, roots, rubbish, and other extraneous matter and legally dispose of them off Owner's property.

1. Spread topsoil, apply soil amendments and fertilizer on surface, and thoroughly blend planting soil.

   a. Delay mixing fertilizer with planting soil if planting will not proceed within a few days.
   b. Mix lime with dry soil before mixing fertilizer.

2. Spread planting soil to a depth of 8 inches but not less than required to meet finish grades after light rolling and natural settlement. Do not spread if planting soil or subgrade is frozen, muddy, or excessively wet.

D. Unchanged Subgrades: If turf is to be planted in areas unaltered or undisturbed by excavating, grading, or surface-soil stripping operations, prepare surface soil as follows:

1. Remove existing grass, vegetation, and turf. Do not mix into surface soil.
2. Loosen surface soil to a depth of at least 8 inches Apply soil amendments and fertilizers according to planting soil mix proportions and mix thoroughly into top 8 inches. Till soil to a homogeneous mixture of fine texture.
3. Remove stones larger than 1 inch in any dimension and sticks, roots, trash, and other extraneous matter.
4. Legally dispose of waste material, including grass, vegetation, and turf, off Owner's property.

E. Finish Grading: Grade planting areas to a smooth, uniform surface plane with loose, uniformly fine texture. Grade to within plus or minus ½ inch of finish elevation. Roll and rake, remove ridges, and fill depressions to meet finish grades. Limit finish grading to areas that can be planted in the immediate future.

F. Moisten prepared area before planting if soil is dry. Water thoroughly and allow surface to dry before planting. Do not create muddy soil.

G. Before planting, obtain Architect's acceptance of finish grading; restore planting areas if eroded or otherwise disturbed after finish grading.

3.4 SEEDING

A. Sow seed with spreader or seeding machine. Do not broadcast or drop seed when wind velocity exceeds 5 mph. Evenly distribute seed by sowing equal quantities in two directions at right angles to each other.

1. Do not use wet seed or seed that is moldy or otherwise damaged.
2. Do not seed against existing trees. Limit extent of seed to outside edge of planting saucer.

B. Rake seed lightly into top 1/8 inch of soil, roll lightly, and water with fine spray.

C. Protect seeded areas with slopes exceeding 1:4 with erosion-control blankets and 1:6 with erosion-control fiber mesh installed and stapled according to manufacturer's written instructions.

D. Protect seeded areas with erosion-control mats where shown on Drawings; install and anchor according to manufacturer's written instructions.

E. Protect seeded areas with slopes not exceeding 1:6 by spreading straw mulch. Spread uniformly at a minimum rate of 2 tons/acre to form a continuous blanket 1-1/2 inches in loose thickness over seeded areas. Spread by hand, blower, or other suitable equipment.

1. Anchor straw mulch by crimping into soil with suitable mechanical equipment.

F. Protect seeded areas from hot, dry weather or drying winds by applying mulch within 24 hours after completing seeding operations.

3.5 HYDROSEEDING

A. Hydroseeding: Mix specified seed, fertilizer, and fiber mulch in water, using equipment specifically designed for hydroseed application. Continue mixing until uniformly blended into homogeneous slurry suitable for hydraulic application.

1. Mix slurry with fiber-mulch manufacturer's recommended tackifier.
2. Apply slurry uniformly to all areas to be seeded in a one-step process.
3. Apply slurry uniformly to all areas to be seeded in a two-step process.

3.6 SODDING

A. Lay sod within 24 hours of harvesting. Do not lay sod if dormant or if ground is frozen or muddy.

B. Lay sod to form a solid mass with tightly fitted joints. Butt ends and sides of sod; do not stretch or overlap. Stagger sod strips or pads to offset joints in adjacent courses. Avoid damage to subgrade or sod during installation. Tamp and roll lightly to ensure contact with subgrade, eliminate air pockets, and form a smooth surface. Work sifted soil or fine sand into minor cracks between pieces of sod; remove excess to avoid smothering sod and adjacent grass.

1. Lay sod across angle of slopes exceeding 1:3.
2. Anchor sod on slopes exceeding 1:6 with wood pegs spaced as recommended by sod manufacturer but not less than 2 anchors per sod strip to prevent slippage.

C. Saturate sod with fine water spray within two hours of planting. During first week after planting, water daily or more frequently as necessary to maintain moist soil to a minimum depth of 1-1/2 inches below sod.

3.7 TURF MAINTENANCE

A. Maintain and establish turf by watering, fertilizing, weeding, mowing, trimming, replanting, and performing other operations as required to establish healthy, viable turf. Roll, regrade, and replant bare or eroded areas and remulch to produce a uniformly smooth turf. Provide materials and installation the same as those used in the original installation.

1. Fill in as necessary soil subsidence that may occur because of settling or other processes. Replace materials and turf damaged or lost in areas of subsidence.
2. In areas where mulch has been disturbed by wind or maintenance operations, add new mulch and anchor as required to prevent displacement.
3. Apply treatments as required to keep turf and soil free of pests and pathogens or disease. Use integrated pest management practices whenever possible to minimize the use of pesticides and reduce hazards.

B. Watering: Install and maintain temporary piping, hoses, and turf-watering equipment to convey water from sources and to keep turf uniformly moist to a depth of 4 inches.

1. Schedule watering to prevent wilting, puddling, erosion, and displacement of seed or mulch. Lay out temporary watering system to avoid walking over muddy or newly planted areas.
2. Water turf with fine spray at a minimum rate of 1 inch per week unless rainfall precipitation is adequate.

C. Mow turf as soon as top growth is tall enough to cut. Repeat mowing to maintain specified height without cutting more than 1/3 of grass height. Remove no more than 1/3 of grass-leaf growth in initial or subsequent mowings. Do not delay mowing until grass blades bend over and become matted. Do not mow when grass is wet. Schedule initial and subsequent mowings to maintain the following grass height: 2 – 3”

D. Turf Post fertilization: Apply fertilizer after initial mowing and when grass is dry.

1. Use fertilizer that will provide actual nitrogen of at least 1 lb/1000 sq. ft. to turf area.

3.8 SATISFACTORY TURF

A. Turf installations shall meet the following criteria as determined by Architect:

1. Satisfactory Seeded Turf: At end of maintenance period, a healthy, uniform, close stand of grass has been established, free of weeds and surface irregularities, with coverage exceeding 90 percent over any 10 sq. ft. and bare spots not exceeding 5 by 5 inches.
2. Satisfactory Sodded Turf: At end of maintenance period, a healthy, well-rooted, even-colored, viable turf has been established, free of weeds, open joints, bare areas, and surface irregularities.

B. Use specified materials to reestablish turf that does not comply with requirements and continue maintenance until turf is satisfactory.

3.9 PESTICIDE APPLICATION

A. Apply pesticides and other chemical products and biological control agents in accordance with requirements of authorities having jurisdiction and manufacturer's written recommendations. Coordinate applications with Owner's operations and others in proximity to the Work. Notify Owner before each application is performed.

B. Post-Emergent Herbicides (Selective and Non-Selective): Apply only as necessary to treat already-germinated weeds and in accordance with manufacturer's written recommendations.

3.10 CLEANUP AND PROTECTION

A. Promptly remove soil and debris created by turf work from paved areas. Clean wheels of vehicles before leaving site to avoid tracking soil onto roads, walks, or other paved areas.

B. Erect temporary fencing or barricades and warning signs as required to protect newly planted areas from traffic. Maintain fencing and barricades throughout initial maintenance period and remove after plantings are established.

C. Remove nondegradable erosion-control measures after grass establishment period.

END OF SECTION

SECTION 329300 - PLANTS

PART 1 - GENERAL

1.1 RELATED DOCUMENTS

A. Drawings and general provisions of the Contract, including General and Supplementary Conditions and Division 01 Specification Sections, apply to this Section.

B. LEED BUILDING GENERAL REQUIREMENTS:

1. Implement practices and procedures to meet the project's environmental goals, which include achieving a LEED™ 2009 New Construction Silver rating. Specific project goals which may impact this and the other sections of this specification include: use of recycled-content materials; use of locally-manufactured materials; use of low-emitting materials; use of certified wood products; construction waste recycling; and the implementation of a construction indoor air quality management plan. Ensure that the requirements related to these goals, as defined in this Section and other Sections of the contract documents, are implemented to the fullest extent. Substitutions or other changes to the work shall not be allowed if such changes substantially compromise the stated LEED Building criteria.
2. Comply with LEED (Leadership in Energy and Environmental Design) Green Building Rating System BD+C, Version 3, Silver.

1.2 SUMMARY

A. Section Includes:

1. Plants.
2. Tree stabilization.
3. Landscape edgings.
4. Gravel Stabilization and Tree Root Protection
5. Mulches

B. Related Sections:

1. Section 015639 "Temporary Tree and Plant Protection" for protecting, trimming, pruning, repairing, and replacing existing trees to remain that interfere with, or are affected by, execution of the Work.
2. Section 017419 Construction and Demolition Waste Management
3. Section 018113 VOC Limits for Adhesives, Sealants, Paints and Coatings
4. Section 018119 Construction Indoor Air Quality (IAQ) Management
5. Section 129200 "Interior Planters and Artificial Plants" for live and artificial interior plants and planters.
6. Section 129300 "Site Furnishings" for exterior unit planters.

7. Section 311000 "Site Clearing" for protection of existing trees and plantings, topsoil stripping and stockpiling, and site clearing.
8. Section 312000 "Earth Moving" for excavation, filling, and rough grading and for subsurface aggregate drainage and drainage backfill materials.
9. Section 329113 “Soil Preparation” for imported topsoil, amended topsoil, sand and organic mulch.
10. Section 329200 "Turf and Grasses" for turf (lawn) and meadow planting, hydroseeding, and erosion-control materials.
11. Section 334600 "Subdrainage" for below-grade drainage of landscaped areas, paved areas, and wall perimeters.

1.3 ALLOWANCES

A. Allowances for plants are specified in Section 012100 "Allowances."

B. If using quantity allowances, retain three subparagraphs below or include similar language in Section 012100 "Allowances."

1. Perform planting work under quantity allowances and only as authorized. Authorized work includes work authorized in writing by Architect.
2. Notify Architect daily of extent of work performed that is attributable to quantity allowances.
3. Perform work that exceeds quantity allowances only as authorized by Change Orders.

C. Furnish trees, shrubs, and groundcovers as part of the contract documents allowance.

1.4 UNIT PRICES

A. Work of this Section is affected by unit prices specified in Section 012200 "Unit Prices."

1. Unit prices apply to authorized work covered by quantity allowances.
2. Unit prices apply to additions to and deletions from Work as authorized by Change Orders.

1.5 DEFINITIONS

A. Amended Topsoil- a mixture of 1/3 approved ‘Imported Topsoil’ and 2/3 of ‘existing stockpile’ mixed on site by qualified installing contractor.

B. Backfill: The earth used to replace or the act of replacing earth in an excavation.

C. Balled and Burlapped Stock: Plants dug with firm, natural balls of earth in which they were grown, with ball size not less than [diameter and depth recommended by ANSI Z60.1 for type and size of plant required; wrapped with burlap, tied, rigidly supported, and drum laced with twine with the root flare visible at the surface of the ball as recommended by ANSI Z60.1.

D. Balled and Potted Stock: Plants dug with firm, natural balls of earth in which they are grown and placed, unbroken, in a container. Ball size is not less than diameter and depth recommended by ANSI Z60.1 for type and size of plant required.

E. Bare-Root Stock: Plants with a well-branched, fibrous-root system developed by transplanting or root pruning, with soil or growing medium removed, and with not less than minimum root spread according to ANSI Z60.1 for type and size of plant required.

F. Container-Grown Stock: Healthy, vigorous, well-rooted plants grown in a container, with a well-established root system reaching sides of container and maintaining a firm ball when removed from container. Container shall be rigid enough to hold ball shape and protect root mass during shipping and be sized according to ANSI Z60.1 for type and size of plant required.

G. Duff Layer: The surface layer of native topsoil that is composed of mostly decayed leaves, twigs, and detritus.

H. Fabric Bag-Grown Stock: Healthy, vigorous, well-rooted plants established and grown in-ground in a porous fabric bag with well-established root system reaching sides of fabric bag. Fabric bag size is not less than diameter, depth, and volume required by ANSI Z60.1 for type and size of plant.

I. Finish Grade: Elevation of finished surface of planting soil.

J. Imported Topsoil- Soil produced off-site by homogeneously blending mineral soils or sand with stabilized organic soil amendments to produce topsoil soil.

K. Manufactured or Imported Topsoil: Soil produced off-site by homogeneously blending mineral soils or sand with stabilized organic soil amendments to produce topsoil or planting soil.

L. Mycorrhizae- Fungus that forms a symbiotic relationship with plant roots to support establishment.

M. Pesticide: A substance or mixture intended for preventing, destroying, repelling, or mitigating a pest. This includes insecticides, miticides, herbicides, fungicides, rodenticides, and molluscicides. It also includes substances or mixtures intended for use as a plant regulator, defoliant, or desiccant.

N. Pests: Living organisms that occur where they are not desired, or that cause damage to plants, animals, or people. These include insects, mites, grubs, mollusks (snails and slugs), rodents (gophers, moles, and mice), unwanted plants (weeds), fungi, bacteria, and viruses.

O. Planting Area: Areas to be planted.

P. Planting Soil: referring to either Imported topsoil or amended topsoil based on drawing designations.

Q. Plant; Plants; Plant Material: These terms refer to vegetation in general, including trees, shrubs, vines, ground covers, ornamental grasses, bulbs, corms, tubers, or herbaceous vegetation.

R. Root Flare: Also called "trunk flare." The area at the base of the plant's stem or trunk where the stem or trunk broadens to form roots; the area of transition between the root system and the stem or trunk.

S. Stem Girdling Roots: Roots that encircle the stems (trunks) of trees below the soil surface.

T. Subgrade: Surface or elevation of subsoil remaining after excavation is complete, or the top surface of a fill or backfill before planting soil is placed.

U. Subsoil: All soil beneath the topsoil layer of the soil profile, and typified by the lack of organic matter and soil organisms.

V. Surface Soil: Soil that is present at the top layer of the existing soil profile at the Project site. In undisturbed areas, the surface soil is typically topsoil; but in disturbed areas such as urban environments, the surface soil can be subsoil.

1.6 ACTION SUBMITTALS

A. Product Data: For each type of product indicated, including soils.

1. Plant Materials: Include quantities, sizes, quality, and sources for plant materials.
2. Pesticides and Herbicides: Include product label and manufacturer's application instructions specific to the Project.
3. Mycorrhizae product: Include product data, and type of application.
4. Plant Photographs: Include color photographs in digital format of each required species and size of plant material as it will be furnished to the Project. Take photographs from an angle depicting true size and condition of the typical plant to be furnished. Include a scale rod or other measuring device in each photograph. For species where more than 20 plants are required, include a minimum of three photographs showing the average plant, the best quality plant, and the worst quality plant to be furnished. Identify each photograph with the full scientific name of the plant, plant size, and name of the growing nursery.

B. Samples for Verification: For each of the following:

1. Trees and Shrubs: Three samples of each variety and size delivered to the site for review. Maintain approved samples on-site as a standard for comparison.
2. Organic Mulch: 1-pint (0.5-liter) volume of each organic mulch required; in sealed plastic bags labeled with composition of materials by percentage of weight and source of mulch. Each Sample shall be typical of the lot of material to be furnished; provide an accurate representation of color, texture, and organic makeup.
3. Mineral Mulch: [2 lb (1.0 kg)]of each mineral mulch required, in sealed plastic bags labeled with source of mulch. Sample shall be typical of the lot of material to be delivered and installed on the site; provide an accurate indication of color, texture, and makeup of the material.
4. Weed Control Barrier: 12 by 12 inches (300 by 300 mm).
5. Edging Materials and Accessories: Manufacturer's standard size, to verify color selected.
6. Tree Grates[, Frames,] and Accessories: Manufacturer's standard size[delivered to the site for review], to verify design[and color] selected.

7. Root Barrier: Width of panel by 12 inches (300 mm).

1.7 INFORMATIONAL SUBMITTALS

A. Qualification Data: For qualified landscape Installer. Include list of similar projects completed by Installer demonstrating Installer's capabilities and experience. Include project names, addresses, and year completed, and include names and addresses of owners' contact persons.

B. Product Certificates: For each type of manufactured product, from manufacturer, and complying with the following:

1. Manufacturer's certified analysis of standard products.
2. Analysis of other materials by a recognized laboratory made according to methods established by the Association of Official Analytical Chemists, where applicable.

C. Maintenance Instructions: Recommended procedures to be established by Owner for maintenance of plants during a calendar year. Submit before start of required maintenance periods.

D. Warranty: Sample of special warranty.

1.8 QUALITY ASSURANCE

A. Installer Qualifications: A qualified landscape Installer whose work has resulted in successful establishment of plants.

1. Professional Membership: Installer shall be a member in good standing of either the Professional Landcare Network or the American Nursery and Landscape Association.
2. Experience: Three years' experience in landscape installation in addition to requirements in Section 014000 "Quality Requirements."
3. Installer's Field Supervision: Require Installer to maintain an experienced full-time supervisor on Project site when work is in progress.
4. Personnel Certifications: Installer's field supervisor shall have certification in one of the following categories from the Professional Landcare Network:

   a. Certified Landscape Technician - Exterior, with installation, maintenance or irrigation specialty area(s), designated CLT-Exterior.
   b. Certified Landscape Technician - Interior, designated CLT-Interior.
   c. Certified Ornamental Landscape Professional, designated COLP.

5. Pesticide Applicator: State licensed, commercial.
   a. materials are present, provide additional recommendations for corrective action.

B. Provide quality, size, genus, species, and variety of plants indicated, complying with applicable requirements in ANSI Z60.1.

1. Selection of plants purchased under allowances will be made by Architect, who will tag plants at their place of growth before they are prepared for transplanting.

C. Measurements: Measure according to ANSI Z60.1. Do not prune to obtain required sizes.

1. Trees and Shrubs: Measure with branches and trunks or canes in their normal position. Take height measurements from or near the top of the root flare for field-grown stock and container grown stock. Measure main body of tree or shrub for height and spread; do not measure branches or roots tip to tip. Take caliper measurements 6 inches (150 mm) above the root flare for trees up to 4-inch (100-mm) caliper size, and 12 inches (300 mm) above the root flare for larger sizes.
2. Other Plants: Measure with stems, petioles, and foliage in their normal position.

D. Plant Material Observation: Architect may observe plant material either at place of growth or at site before planting for compliance with requirements for genus, species, variety, cultivar, size, and quality. Architect retains right to observe trees and shrubs further for size and condition of balls and root systems, pests, disease symptoms, injuries, and latent defects and to reject unsatisfactory or defective material at any time during progress of work. Remove rejected trees or shrubs immediately from Project site.

1. Notify Architect of sources of planting materials seven days in advance of delivery to site.

E. Pre-installation Conference: Conduct conference at Project site.

1.9 DELIVERY, STORAGE, AND HANDLING

A. Packaged Materials: Deliver packaged materials in original, unopened containers showing weight, certified analysis, name and address of manufacturer, and indication of conformance with state and federal laws if applicable.

B. Bulk Materials:

1. Do not dump or store bulk materials near structures, utilities, walkways and pavements, or on existing turf areas or plants.
2. Provide erosion-control measures to prevent erosion or displacement of bulk materials, discharge of soil-bearing water runoff, and airborne dust reaching adjacent properties, water conveyance systems, or walkways.
3. Accompany each delivery of bulk fertilizers, lime, and soil amendments with appropriate certificates.

C. Deliver bare-root stock plants freshly dug. Immediately after digging up bare-root stock, pack root system in wet straw, hay, or other suitable material to keep root system moist until planting.

D. Do not prune trees and shrubs before delivery. Protect bark, branches, and root systems from sun scald, drying, wind burn, sweating, whipping, and other handling and tying damage. Do not bend or bind-tie trees or shrubs in such a manner as to destroy their natural shape. Provide protective covering of plants during shipping and delivery. Do not drop plants during delivery and handling.

E. Do not Handle planting stock by tree trunk or branches. Handle by root ball / container only.

F. Store bulbs, corms, and tubers in a dry place at 60 to 65 deg F (16 to 18 deg C) until planting.

G. Deliver plants after preparations for planting have been completed, and install immediately. If planting is delayed more than six hours after delivery, set plants and trees in their appropriate aspect (sun, filtered sun, or shade), protect from weather and mechanical damage, and keep roots moist.

1. Heel-in bare-root stock. Soak roots that are in dry condition in water for two hours. Reject dried-out plants.
2. Set balled stock on ground and cover ball with soil, peat moss, sawdust, or other acceptable material.
3. Do not store in horizontal position. Plant specimens must be stored perpendicular to ground.
4. Do not remove container-grown stock from containers before time of planting.
5. Water root systems of plants stored on-site deeply and thoroughly with a fine-mist spray. Water as often as necessary to maintain root systems in a moist, but not overly-wet condition.

1.10 PROJECT CONDITIONS

A. Field Measurements: Verify actual grade elevations, service and utility locations, irrigation system components, and dimensions of plantings and construction contiguous with new plantings by field measurements before proceeding with planting work.

B. Interruption of Existing Services or Utilities: Do not interrupt services or utilities to facilities occupied by Owner or others unless permitted under the following conditions and then only after arranging to provide temporary services or utilities according to requirements indicated:

1. Notify Construction Manager no fewer than two days in advance of proposed interruption of each service or utility.
2. Do not proceed with interruption of services or utilities without Architect's written permission.

C. Planting Restrictions: Plant during one of the following periods. Coordinate planting periods with maintenance periods to provide required maintenance from date of Substantial Completion.

1. Spring Planting: April 1 – May 15, and September 30 – December while the soil is in a workable condition
2. Fall Planting: April 1 – start of new growth in June, and September 1 – October 15.
3. Weather Limitations: Proceed with planting only when existing and forecasted weather conditions permit planting to be performed when beneficial and optimum results may be obtained. Apply products during favorable weather conditions according to manufacturer's written instructions and warranty requirements.

D. Coordination with Turf Areas (Lawns): Plant trees, shrubs, and other plants after finish grades are established and before planting turf areas unless otherwise indicated.

1. When planting trees, shrubs, and other plants after planting turf areas, protect turf areas, and promptly repair damage caused by planting operations.

1.11 WARRANTY

A. Special Warranty: Installer agrees to repair or replace plantings and accessories that fail in materials, workmanship, or growth within specified warranty period.

1. Failures include, but are not limited to, the following:

a. Death and unsatisfactory growth, except for defects resulting from abuse, lack of adequate maintenance, or neglect by Owner, or incidents that are beyond Contractor's control.
b. Structural failures including plantings falling or blowing over.
c. Faulty performance of tree stabilization, edgings, tree grates.
d. Deterioration of metals, metal finishes, and other materials beyond normal weathering.

2. Warranty Periods from Date of Substantial Completion:

a. Trees, Shrubs, Vines, and Ornamental Grasses: 24 months.
b. Ground Covers, Biennials, Perennials, and Other Plants: 24 months.
c. Annuals: Three months.

3. Include the following remedial actions as a minimum:

a. Immediately remove dead plants and replace unless required to plant in the succeeding planting season.
b. Replace plants that are more than 25 percent dead or in an unhealthy condition at end of warranty period.
c. A limit of one replacement of each plant will be required except for losses or replacements due to failure to comply with requirements.
d. Provide extended warranty for period equal to original warranty period, for replaced plant material.

1.12 MAINTENANCE SERVICE

A. Initial Maintenance Service for Trees and Shrubs: Provide maintenance by skilled employees of landscape Installer. Maintain as required in Part 3. Begin maintenance immediately after plants are installed and continue until plantings are acceptably healthy and well established but for not less than maintenance period below.

1. Maintenance Period: 12 months from date of Substantial Completion

B. Initial Maintenance Service for Ground Cover and Other Plants: Provide maintenance by skilled employees of landscape Installer. Maintain as required in Part 3. Begin maintenance immediately after plants are installed and continue until plantings are acceptably healthy and well established but for not less than maintenance period below.

1. Maintenance Period: Six months from date of Substantial Completion.

C. Continuing Maintenance Proposal: From Installer to Owner, in the form of a standard yearly (or other period) maintenance agreement, starting on date initial maintenance service is concluded. State services, obligations, conditions, and terms for agreement period and for future renewal options.

PART 2 - PRODUCTS

2.1 PLANT MATERIAL

A. General: Furnish nursery-grown plants true to genus, species, variety, cultivar, stem form, shearing, and other features indicated in Plant Schedule or Plant Legend shown on Drawings and complying with ANSI Z60.1; and with healthy root systems developed by transplanting or root pruning. Provide well-shaped, fully branched, healthy, vigorous stock, densely foliated when in leaf and free of disease, pests, eggs, larvae, and defects such as knots, sun scald, injuries, abrasions, and disfigurement.

1. Trees with damaged, crooked, or multiple leaders; tight vertical branches where bark is squeezed between two branches or between branch and trunk ("included bark"); crossing trunks; cut-off limbs more than 3/4 inch (19 mm) in diameter; or with stem girdling roots will be rejected.
2. Collected Stock: Do not use plants harvested from the wild, from native stands, from an established landscape planting, or not grown in a nursery unless otherwise indicated.

B. Provide plants of sizes, grades, and ball or container sizes complying with ANSI Z60.1 for types and form of plants required. Plants of a larger size may be used if acceptable to Architect, with a proportionate increase in size of roots or balls.

C. Root-Ball Depth: Furnish trees and shrubs with root balls measured from top of root ball, which shall begin at root flare according to ANSI Z60.1. Root flare shall be visible before planting.

D. Labeling: Label each plant of each variety, size, and caliper with a securely attached, waterproof tag bearing legible designation of common name and full scientific name, including genus and species. Include nomenclature for hybrid, variety, or cultivar, if applicable for the plant as shown on Drawings.

E. If formal arrangements or consecutive order of plants is shown on Drawings, select stock for uniform height and spread, and number the labels to assure symmetry in planting.

F. Annuals and Biennials: Provide healthy, disease-free plants of species and variety shown or listed, with well-established root systems reaching to sides of the container to maintain a firm ball, but not with excessive root growth encircling the container. Provide only plants that are acclimated to outdoor conditions before delivery and that are in bud but not yet in bloom.

G. Additional Trees to be purchased and delivered to Depot or Storrs Campus. Final location will be coordinated at the time of delivery. The trees will to be delivered in 3 equal separate shipments: Fall 2015, Spring 2015, and Fall 2016. The selection and tagging of the trees will me requirements in this specification section.

1. Acer triflorum – 2.5-3” cal
2. Amelanchier canadensis Rainbow Pillar– 2.5-3” cal
3. Betula nigra Summer Cascade– 2.5-3” cal
4. Cercis canadensis Cascading Hearts– 2.5-3” cal
5. Cedrus atlantica Glauca– 2.5-3” cal
6. Fagus sylvatica Red Obelisk– 2.5-3” cal
7. Fagus sylvatica Purple Fountain– 2.5-3” cal
8. Ostrya virginiana– 2.5-3” cal
9. Styrax japonicas– 2.5-3” cal
10. Abies concolor – 3-3.5” cal
11. Aesculus glabra – 3-3.5” cal
12. Betula lenta – 3-3.5” cal
13. Corylus colurna – 3-3.5” cal
14. Liquidambar styraciflua Variegata – 3-3.5” cal
15. Liquidambar styraciflua Slender Silhoutte – 3-3.5” cal
16. Picea glauca – 3-3.5” cal
17. Quercus phellos – 3-3.5” cal
18. Ulmus parvifolia – 3-3.5” cal

2.2 MULCHES

A. Organic Mulch: Free from deleterious materials and suitable as a top dressing of trees and shrubs, consisting of one of the following:

1. Type: [Shredded hardwood] [Ground or shredded bark] [Wood and bark chips] [Pine straw] [Salt hay or threshed straw] [Pine needles] [Peanut, pecan, and cocoa-bean shells] <Insert mulch type>.
2. Size Range: [3 inches (76 mm) maximum, 1/2 inch (13 mm) minimum] <Insert size range>.
3. Color: Natural.

B. Compost Mulch: Well-composted, stable, and weed-free organic matter, pH range of 5.5 to 8; moisture content 35 to 55 percent by weight; 100 percent passing through 1-inch (25-mm) sieve; soluble salt content of [2 to 5] <Insert range or value> decisiemens/m; not exceeding 0.5 percent inert contaminants and free of substances toxic to plantings; and as follows:

1. Organic Matter Content: [50 to 60] <Insert range> percent of dry weight.
2. Feedstock: Agricultural, food, or industrial residuals; biosolids; yard trimmings; or source-separated or compostable mixed solid waste.

C. Mineral Mulch: Hard, durable stone, washed free of loam, sand, clay, and other foreign substances, of following type, size range, and color:

1. Type: [Rounded riverbed gravel or smooth-faced stone] [Crushed stone or gravel] [Marble chips] [Granite chips] <Insert stone type>.
2. Size Range: [1-1/2 inches (38 mm) maximum, 3/4 inch (19 mm) minimum] [3/4 inch (19 mm) maximum, 1/4 inch (6.4 mm) minimum] <Insert size range>.
3. Color: [Uniform tan-beige color range acceptable to Architect] [Readily available natural gravel color range] <Insert color>.

2.3 MYCORRHIZAE

A. Powder Micronized Endo and Ecto:
   1. Minimum 100,000 Endo and 110 million Ecto Propagules per lbs.
   2. Particle size less than 300 microns (#50 screen).
   3. 4 endomycorrhizal fungi species and 7 ectomycorrhizal fungi species.

2.4 WEED-CONTROL BARRIERS

A. Nonwoven Geotextile Filter Fabric: Polypropylene or polyester fabric, 3 oz./sq. yd. (101g/sq. m) minimum, composed of fibers formed into a stable network so that fibers retain their relative position. Fabric shall be inert to biological degradation and resist naturally-encountered chemicals, alkalis, and acids.

B. Composite Fabric: Woven, needle-punched polypropylene substrate bonded to a nonwoven polypropylene fabric, 4.8 oz./sq. yd. (162 g/sq. m).

2.5 PESTICIDES

A. General: Pesticide registered and approved by EPA, acceptable to authorities having jurisdiction, and of type recommended by manufacturer for each specific problem and as required for Project conditions and application. Do not use restricted pesticides unless authorized in writing by authorities having jurisdiction.

B. Pre-Emergent Herbicide (Selective and Non-Selective): Effective for controlling the germination or growth of weeds within planted areas at the soil level directly below the mulch layer.

C. Post-Emergent Herbicide (Selective and Non-Selective): Effective for controlling weed growth that has already germinated.

2.6 TREE STABILIZATION MATERIALS

A. Stakes and Guys:

   1. Upright and Guy Stakes: Rough-sawn, sound, new [hardwood] [softwood with specified wood pressure-preservative treatment], free of knots, holes, cross grain, and other defects, 2-by-2-inch nominal (38-by-38-mm actual) by length indicated, pointed at one end.
   2. Wood Deadmen: Timbers measuring 8 inches (200 mm) in diameter and 48 inches (1200 mm) long, treated with specified wood pressure-preservative treatment.
   3. Flexible Ties: Wide rubber or elastic bands or straps of length required to reach stakes or [turnbuckles] [compression springs].
   4. Guys and Tie Wires: ASTM A 641/A 641M, Class 1, galvanized-steel wire, two-strand, twisted, 0.106 inch (2.7 mm) in diameter.
   5. Tree-Tie Webbing: UV-resistant polypropylene or nylon webbing with brass grommets.

6. Guy Cables: Five-strand, 3/16-inch- (4.8-mm-) diameter, galvanized-steel cable, with zinc-coated [turnbuckles] [compression springs], a minimum of 3 inches (75 mm) long, with two 3/8-inch (10-mm) galvanized eyebolts.
7. Flags: Standard surveyor's plastic flagging tape, white, 6 inches (150 mm) long.
8. Proprietary Staking-and-Guying Devices: Proprietary stake and adjustable tie systems to secure each new planting by plant stem; sized as indicated and per manufacturer's written recommendations.

   a. Products: Subject to compliance with requirements, [provide the following] [provide one of the following] [available products that may be incorporated into the Work include, but are not limited to, the following]:

      1) Arborbrace; ArborBrace Tree Guying System.
      2) Decorations for Generations, Inc.; [Reddy Stake] [Mega Stake] System.
      3) <Insert manufacturer's name; product name or designation>.

B. Root-Ball Stabilization Materials:
1. Tree Staples: Staple all trees 2” and greater in caliper and 6’ or greater in height, using Tree Staple brand staples. Tree Staples are composed of uncoated, cold-rolled, plain carbon steel. Install according to manufacturer’s instructions and as indicated in drawings.
2. Tree staples shall be sized according to the following chart:

Tree Caliper	Tree Staple Model	# of Staples per Tree
1" - 2"	TS24 (24")	2 with up to a 16" root ball
2" - 4"	TS36 (36")	2 with a 24" root ball
4" - 6"	TS42 (42")	3 with a 30"+ root ball
6" - 8"	TS48 (48")	3 with a 36"+ root ball

   a. Products: Subject to compliance with requirements, [provide the following] [provide one of the following] [available products that may be incorporated into the Work include, but are not limited to, the following]:

      1) Border Concepts, Inc.; Tomahawk Tree Stabilizers.
      2) Foresight Products, LLC; Duckbill Rootball Fixing System.
      3) Tree Staple, Inc.; Tree Staples.
      4) <Insert manufacturer's name; product name or designation>.

3. Upright Stakes and Horizontal Hold-Down: Rough-sawn, sound, new hardwood or softwood, free of knots, holes, cross grain, and other defects, 2-by-2-inch nominal (38-by-38-mm actual) by length indicated; stakes pointed at one end.
4. Wood Screws: ASME B18.6.1.
5. Retain subparagraph below for proprietary devices.

2.7 MISCELLANEOUS

A. Steel Edging:
1. Standard commercial-steel edging, rolled edge, fabricated in sections of standard lengths, with loops stamped from or welded to face of sections to receive stakes.

2. Manufacturers: Subject to compliance with requirements, provide products by one of the following:

   a. Border Concepts, Inc.
   b. Collier Metal Specialties, Inc.
   c. Russell, J. D. Company (The).
   d. Ryerson Tull, Inc.

3. Edging Size: 1/4 inch (6.4 mm) wide by 5 inches (125 mm) deep.
4. Stakes: Tapered steel, a minimum of 16 inches (400 mm) long.
5. Accessories: Standard tapered ends, corners, and splicers.
6. Finish: Standard rust resistant paint.
7. Paint Color: Black.

B. Gravel Stabilization and Tree Root Protection
   1. Basis of Design: CORE Systems gravel stabilization system consisting of panels of connected honeycomb cells with a geotextile backing
      a. CORE gravel 50-35HDR
         1) Cell Size: 50mm wide x 35mm deep
         2) Cell Wall Thickness: 2.0mm
         3) Sheet Size: 1.2m x .72m (9.4 sq. ft.)
         4) Cell Colour: Black Recycled
         5) Geotextile Fabric: Yes
         6) Compressive Strencgth: 150 t/m2 (empty)

2.8 MISCELLANEOUS PRODUCTS

A. Wood Pressure-Preservative Treatment: AWPA C2, with waterborne preservative for soil and freshwater use, acceptable to authorities having jurisdiction, and containing no arsenic; including ammoniacal copper arsenate, ammoniacal copper zinc arsenate, and chromated copper arsenate.

B. Root Barrier: Black, molded, modular panels manufactured with 50 percent recycled polyethylene plastic with ultraviolet inhibitors, 85 mils (2.2 mm) thick, with vertical root deflecting ribs protruding 3/4 inch (19 mm) out from panel, and each panel [18 inches (457 mm)] [24 inches (610 mm)] <Insert measurement> wide.

C. Antidesiccant: Water-insoluble emulsion, permeable moisture retarder, film forming, for trees and shrubs. Deliver in original, sealed, and fully labeled containers and mix according to manufacturer's written instructions.

D. Burlap: Non-synthetic, biodegradable.

E. Planter Drainage Gravel: Washed, sound crushed stone or gravel complying with [ASTM D 448 for Size No. 8] <Insert requirements>.

F. Planter Filter Fabric: [Woven] [Nonwoven] geotextile manufactured for separation applications and made of polypropylene, polyolefin, or polyester fibers or combination of them.

G. Mycorrhizal Fungi: Dry, granular inoculant containing at least 5300 spores per lb (0.45 kg) of vesicular-arbuscular mycorrhizal fungi and 95 million spores per lb (0.45 kg) of ectomycorrhizal fungi, 33 percent hydrogel, and a maximum of 5.5 percent inert material.

PART 3 - EXECUTION

3.1 EXAMINATION

A. Examine areas to receive plants for compliance with requirements and conditions affecting installation and performance.

1. Verify that no foreign or deleterious material or liquid such as paint, paint washout, concrete slurry, concrete layers or chunks, cement, plaster, oils, gasoline, diesel fuel, paint thinner, turpentine, tar, roofing compound, or acid has been deposited in soil within a planting area.
2. Do not mix or place soils and soil amendments in frozen, wet, or muddy conditions.
3. Suspend soil spreading, grading, and tilling operations during periods of excessive soil moisture until the moisture content reaches acceptable levels to attain the required results.
4. Uniformly moisten excessively dry soil that is not workable and which is too dusty.

B. Proceed with installation only after unsatisfactory conditions have been corrected.

C. If contamination by foreign or deleterious material or liquid is present in soil within a planting area, remove the soil and contamination as directed by Architect and replace with new planting soil.

3.2 PREPARATION

A. Protect structures, utilities, sidewalks, pavements, and other facilities and turf areas and existing plants from damage caused by planting operations.

B. Install erosion-control measures to prevent erosion or displacement of soils and discharge of soil-bearing water runoff or airborne dust to adjacent properties and walkways.

C. Lay out individual tree and shrub locations and areas for multiple plantings. Stake locations, outline areas, adjust locations when requested, and obtain Architect's acceptance of layout before excavating or planting. Make minor adjustments as required.

D. Lay out plants at locations directed by Architect. Stake locations of individual trees and shrubs and outline areas for multiple plantings.

E. Apply antidesiccant to trees and shrubs using power spray to provide an adequate film over trunks (before wrapping), branches, stems, twigs, and foliage to protect during digging, handling, and transportation.

1. If deciduous trees or shrubs are moved in full leaf, spray with antidesiccant at nursery before moving and again two weeks after planting.

F. Apply Mycorrhizae to tree and shrub roots by hand or by manufacturer recommendations to minimize impact on roots. Apply powder during transplanting process before installed in the ground.

G. Wrap trees and shrubs with burlap fabric over trunks, branches, stems, twigs, and foliage to protect from wind and other damage during digging, handling, and transportation.

3.3 PLANTING AREA ESTABLISHMENT

A. Typical Tree Planting Area Establishment

1. Newly Graded Subgrades: Loosen subgrade to a minimum depth of [3 inches (100 mm)] Remove stones larger than [1 inch (25 mm)] in any dimension and sticks, roots, rubbish, and other extraneous matter and legally dispose of them off Owner's property.
2. Refer to Soil preparation specification for topsoil and amendment information.

B. Shrub Planting Area Establishment

1. Newly Graded Subgrades: Loosen subgrade to a minimum depth of [3 inches (100 mm)] Remove stones larger than [1 inch (25 mm)] in any dimension and sticks, roots, rubbish, and other extraneous matter and legally dispose of them off Owner's property.
2. Refer to Soil preparation specification for topsoil and amendment information.

C. Perennial and Groundcover Area Establishment

1. Newly Graded Subgrades: Loosen subgrade to a minimum depth of [3 inches (100 mm)] Remove stones larger than [1 inch (25 mm)] in any dimension and sticks, roots, rubbish, and other extraneous matter and legally dispose of them off Owner's property.
2. Refer to Soil preparation specification for topsoil and amendment information.

D. Finish Grading: Grade planting areas to a smooth, uniform surface plane with loose, uniformly fine texture. Roll and rake, remove ridges, and fill depressions to meet finish grades.

E. Before planting, obtain Architect's acceptance of finish grading; restore planting areas if eroded or otherwise disturbed after finish grading.

F. Application of Mycorrhizal Fungi: At time directed by Architect, broadcast dry product uniformly over prepared soil at application rate indicated by manufacturer.

3.4 EXCAVATION FOR TREES AND SHRUBS

A. Insert site clearing and rough grading requirements in this article if subgrade preparation is not included in Section 311000 "Site Clearing" and Section 312000 "Earth Moving."

B. Planting Pits and Trenches: Excavate circular planting pits with sides sloping inward at a 45-degree angle. Excavations with vertical sides are not acceptable. Trim perimeter of bottom leaving center area of bottom raised slightly to support root ball and assist in drainage away from center. Do not further disturb base. Ensure that root ball will sit on undisturbed base soil to prevent settling. Scarify sides of planting pit smeared or smoothed during excavation.

1. Excavate approximately three times as wide as ball diameter for balled and burlapped stock.
2. Excavate at least 12 inches (300 mm) wider than root spread and deep enough to accommodate vertical roots for bare-root stock.
3. Do not excavate deeper than depth of the root ball, measured from the root flare to the bottom of the root ball.
4. If area under the plant was initially dug too deep, add soil to raise it to the correct level and thoroughly tamp the added soil to prevent settling.
5. Maintain required angles of repose of adjacent materials as shown on the Drawings. Do not excavate subgrades of adjacent paving, structures, hardscapes, or other new or existing improvements.
6. Maintain supervision of excavations during working hours.
7. Keep excavations covered or otherwise protected when unattended by Installer's personnel.
8. If drain tile is shown on Drawings or required under planting areas, excavate to top of porous backfill over tile.

C. Obstructions: Notify Architect if unexpected rock or obstructions detrimental to trees or shrubs are encountered in excavations.

1. Hardpan Layer: Drill 6-inch- (150-mm-) diameter holes, 24 inches (600 mm) apart, into free-draining strata or to a depth of 10 feet (3 m), whichever is less, and backfill with free-draining material.

D. Drainage: Notify Architect if subsoil conditions evidence unexpected water seepage or retention in tree or shrub planting pits.

E. Fill excavations with water and allow to percolate away before positioning trees and shrubs.

3.5 TREE, SHRUB, AND VINE PLANTING

A. Before planting, verify that root flare is visible at top of root ball according to ANSI Z60.1. If root flare is not visible, remove soil in a level manner from the root ball to where the top-most root emerges from the trunk. After soil removal to expose the root flare, verify that root ball still meets size requirements.

B. Remove stem girdling roots and kinked roots. Remove injured roots by cutting cleanly; do not break.

C. Set balled and burlapped stock plumb and in center of planting pit or trench with root flare [2 inches (50 mm) above adjacent finish grades.

1. Use planting soil for backfill.
2. After placing some backfill around root ball to stabilize plant, carefully cut and remove burlap, rope, and wire baskets from tops of root balls and from sides, but do not remove from under root balls. Remove pallets, if any, before setting. Do not use planting stock if root ball is cracked or broken before or during planting operation.
3. Backfill around root ball in layers, tamping to settle soil and eliminate voids and air pockets. When planting pit is approximately one-half filled, water thoroughly before placing remainder of backfill. Repeat watering until no more water is absorbed.
4. Place planting tablets in each planting pit when pit is approximately one-half filled; in amounts recommended in soil reports from soil-testing laboratory. Place tablets beside the root ball about 1 inch (25 mm) from root tips; do not place tablets in bottom of the hole.
5. Continue backfilling process. Water again after placing and tamping final layer of soil.

D. When planting on slopes, set the plant so the root flare on the uphill side is flush with the surrounding soil on the slope; the edge of the root ball on the downhill side will be above the surrounding soil. Apply enough soil to cover the downhill side of the root ball. See Planting Details Sheet.

3.6 MECHANIZED TREE SPADE PLANTING

A. Trees shall be planted with an approved mechanized tree spade at the designated locations. Do not use tree spade to move trees larger than the maximum size allowed for a similar field-grown, balled-and-burlapped root-ball diameter according to ANSI Z60.1, or larger than the manufacturer's maximum size recommendation for the tree spade being used, whichever is smaller.

B. When extracting the tree, center the trunk within the tree spade and move tree with a solid ball of earth.

C. Cut exposed roots cleanly during transplanting operations.

D. Use the same tree spade to excavate the planting hole as was used to extract and transport the tree.

E. Plant trees as shown on Drawings, following procedures in "Tree, Shrub, and Vine Planting" Article.

F. Where possible, orient the tree in the same direction as in its original location.

3.7 TREE, SHRUB, AND VINE PRUNING

A. Remove only dead, dying, or broken branches. Do not prune for shape.

B. Prune, thin, and shape trees, shrubs, and vines as directed by Architect.

C. Prune, thin, and shape trees, shrubs, and vines according to standard professional horticultural and arboricultural practices. Unless otherwise indicated by Architect, do not cut tree leaders;

remove only injured, dying, or dead branches from trees and shrubs; and prune to retain natural character.

D. Do not apply pruning paint to wounds.

3.8 TREE STABILIZATION

A. Install trunk stabilization as follows unless otherwise indicated:

1. Upright Staking and Tying: Stake trees of 2- through 5-inch (50- through 125-mm) caliper. Stake trees of less than 2-inch (50-mm) caliper only as required to prevent wind tip out. Use a minimum of two stakes of length required to penetrate at least 18 inches (450 mm) below bottom of backfilled excavation and to extend one-third of trunk height above grade. Set vertical stakes and space to avoid penetrating root balls or root masses.
2. Use two stakes for trees up to 12 feet (3.6 m) high and 2-1/2 inches (63 mm) or less in caliper; three stakes for trees less than 14 feet (4.2 m) high and up to 4 inches (100 mm) in caliper. Space stakes equally around trees.
3. Support trees with bands of flexible ties at contact points with tree trunk. Allow enough slack to avoid rigid restraint of tree.
4. Support trees with two strands of tie wire, connected to the brass grommets of tree-tie webbing at contact points with tree trunk. Allow enough slack to avoid rigid restraint of tree.

B. Staking and Guying: Stake and guy trees more than 14 feet (4.2 m) in height and more than 3 inches (75 mm) in caliper unless otherwise indicated. Securely attach no fewer than three guys to stakes 30 inches (760 mm) long, driven to grade.

1. Site-Fabricated Staking-and-Guying Method:

   a. For trees more than 6 inches (150 mm) in caliper, anchor guys to wood deadmen buried at least 36 inches (900 mm) below grade. Provide turnbuckle for each guy wire and tighten securely.
   b. Support trees with bands of flexible ties at contact points with tree trunk and reaching to turnbuckle. Allow enough slack to avoid rigid restraint of tree.
   c. Support trees with strands of cable or multiple strands of tie wire, connected to the brass grommets of tree-tie webbing at contact points with tree trunk and reaching to turnbuckle. Allow enough slack to avoid rigid restraint of tree.
   d. Attach flags to each guy wire, 30 inches (760 mm) above finish grade.
   e. Paint turnbuckles with luminescent white paint.

2. Proprietary Staking and Guying Device: Install staking and guying system sized and positioned as recommended by manufacturer unless otherwise indicated and according to manufacturer's written instructions.

C. Root-Ball Stabilization: Install at- or below-grade stabilization system to secure each new planting by the root ball unless otherwise indicated.

1. Wood Hold-Down Method: Place vertical stakes against side of root ball and drive them into subsoil; place horizontal wood hold-down stake across top of root ball and screw at each end to one of the vertical stakes.

    a. Install stakes of length required to penetrate at least to the dimension shown on Drawings below bottom of backfilled excavation. Saw stakes off at horizontal stake.
    b. Install screws through horizontal hold-down and penetrating at least 1 inch (25 mm) into stakes. Predrill holes if necessary to prevent splitting wood.
    c. Install second set of stakes on other side of root trunk for larger trees as indicated.

2. Proprietary Root-Ball Stabilization Device: Install root-ball stabilization system sized and positioned as recommended by manufacturer unless otherwise indicated and according to manufacturer's written instructions.

3.9 ROOT-BARRIER INSTALLATION

A. Install root barrier where trees are planted within 60 inches (1500 mm of paving or other hardscape elements, such as walls, curbs, and walkways unless otherwise shown on Drawings.

B. Align root barrier vertically and run it linearly along and adjacent to the paving or other hardscape elements to be protected from invasive roots.

C. Install root barrier continuously for a distance of 60 inches1500 mm in each direction from the tree trunk, for a total distance of 10 feet (3 m) per tree. If trees are spaced closer, use a single continuous piece of root barrier.

    1. Position top of root barrier per manufacturer's recommendations.
    2. Overlap root barrier a minimum of 12 inches (300 mm) at joints.
    3. Do not distort or bend root barrier during construction activities.
    4. Do not install root barrier surrounding the root ball of tree.

3.10 GROUND COVER AND PLANT PLANTING

A. Set out and space ground cover and plants other than trees, shrubs, and vines as indicated in even rows with triangular spacing.

B. Use planting soil for backfill; refer to soil preparation specification.

C. Dig holes large enough to allow spreading of roots.

D. For rooted cutting plants supplied in flats, plant each in a manner that will minimally disturb the root system but to a depth not less than two nodes.

E. Work soil around roots to eliminate air pockets and leave a slight saucer indentation around plants to hold water.

F. Water thoroughly after planting, taking care not to cover plant crowns with wet soil.

G. Protect plants from hot sun and wind; remove protection if plants show evidence of recovery from transplanting shock.

3.11 PLANTING AREA MULCHING

A. Install weed-control barriers before mulching according to manufacturer's written instructions. Completely cover area to be mulched, overlapping edges a minimum of [6 inches (150 mm)] [12 inches (300mm)] and secure seams with galvanized pins.

B. Mulch backfilled surfaces of planting areas and other areas indicated.

1. Trees in Turf Areas: Apply mineral mulch ring of [2-inch (50-mm)] average thickness, with 12-inch (300-mm) radius around trunks or stems. Do not place mulch within 3 inches (75 mm) of trunks or stems.
2. Organic Mulch in Planting Areas: Apply 2-inch (50-mm) average thickness of organic mulch [extending 12 inches (300 mm) beyond edge of individual planting pit or trench] [and] [over whole surface of planting area], and finish level with adjacent finish grades. Do not place mulch within [3 inches (75 mm)] [6 inches (150 mm)] <Insert distance> of trunks or stems.
3. Mineral Mulch in Planting Areas: Apply dept as indicated in rawings average thickness of mineral mulch over whole surface of planting area, and finish level with adjacent finish grades. Do not place mulch within 3 inches (75 mm) of trunks or stems.

3.12 EDGING INSTALLATION

A. Steel Edging: Install steel edging where indicated according to manufacturer's written instructions. Anchor with steel stakes spaced approximately 30 inches (760 mm) apart, driven below top elevation of edging.

3.13 PLANT MAINTENANCE

A. Maintain plantings by pruning, cultivating, watering, weeding, fertilizing, mulching, restoring planting saucers, adjusting and repairing tree-stabilization devices, resetting to proper grades or vertical position, and performing other operations as required to establish healthy, viable plantings. Spray or treat as required to keep trees and shrubs free of insects and disease.

B. Fill in as necessary soil subsidence that may occur because of settling or other processes. Replace mulch materials damaged or lost in areas of subsidence.

C. Apply treatments as required to keep plant materials, planted areas, and soils free of pests and pathogens or disease. Use integrated past management practices whenever possible to minimize the use of pesticides and reduce hazards. Treatments include physical controls such as hosing off foliage, mechanical controls such as traps, and biological control agents.

3.14 PESTICIDE APPLICATION

A. Apply pesticides and other chemical products and biological control agents in accordance with authorities having jurisdiction and manufacturer's written recommendations. Coordinate applications with Owner's operations and others in proximity to the Work. Notify Owner before each application is performed.

B. Pre-Emergent Herbicides (Selective and Non-Selective): Apply to tree, shrub, and ground-cover areas in accordance with manufacturer's written recommendations. Do not apply to seeded areas.

C. Post-Emergent Herbicides (Selective and Non-Selective): Apply only as necessary to treat already-germinated weeds and in accordance with manufacturer's written recommendations.

3.15 CLEANUP AND PROTECTION

A. During planting, keep adjacent paving and construction clean and work area in an orderly condition.

B. Protect plants from damage due to landscape operations and operations of other contractors and trades. Maintain protection during installation and maintenance periods. Treat, repair, or replace damaged plantings.

C. After installation and before Substantial Completion remove nursery tags, nursery stakes, tie tape, labels, wire, burlap, and other debris from plant material, planting areas, and Project site.

3.16 DISPOSAL

A. Remove surplus soil and waste material including excess subsoil, unsuitable soil, trash, and debris and legally dispose of them off Owner's property.

END OF SECTION 329300

SECTION 32 93 53 LANDSCAPE MAINTENANCE

PART 1- GENERAL

1.1 RELAETD DOCUMENTS

A Drawings and general provisions of the Contract, including General and Supplementary Conditions and Division 01 Specification Sections, apply to this Section.

B. LEED BUILDING GENERAL REQUIREMENTS:

1. Implement practices and procedures to meet the project's environmental goals, which include achieving a LEED™ 2009 New Construction Silver rating. Specific project goals which may impact this and the other sections of this specification include: use of recycled-content materials; use of locally-manufactured materials; use of low-emitting materials; use of certified wood products; construction waste recycling; and the implementation of a construction indoor air quality management plan. Ensure that the requirements related to these goals, as defined in this Section and other Sections of the contract documents, are implemented to the fullest extent. Substitutions or other changes to the work shall not be allowed if such changes substantially compromise the stated LEED Building criteria.
2. Comply with LEED (Leadership in Energy and Environmental Design) Green Building Rating System BD+C, Version 3, Silver.

1.2 SUMMARY

A. Provide labor, materials, equipment, services and transportation to complete work.

1. Plant and turf maintenance including pruning, watering, drainage, irrigation, fertilizing, weed and pest control, and adjusting tree guys.
2. Guaranty and replacement of unacceptable plants.
3. Providing Owner with Maintenance Manual.

1.3 REFERENCES

A. Comply with applicable requirements of:

1. State of Connecticut Department of Transportation (ConnDOT) Standard Specifications for Roads, Bridges and Incidental Construction, Latest addition
2. American Association of Nurserymen, American Standards for Nursery Stock, (ANSI Z60.1), latest edition, published by the American Association of Nurserymen, 1250 I Street, N.W., Suite 500 Washington, D.C. 20005.

1.4 DEFINITIONS

A. Maintenance: consists of keeping turf , woody, perennial and annual plants in healthy growing condition including watering, weeding, cultivating, remulching, tightening and repairing of guys, removal and replacement of dead plant material, resetting plants to proper grades or upright positions and maintaining saucer.

1.5 SUBMITTALS

A. Submittals: in accordance with Section 01 3300 – Submittal Procedures

B. Materials List: provide list of materials to be used in maintenance; materials shall be the same as approved in related sections:

1. Fertilizers, soil amendments, testing see Section 32 9113 – Planting Soils.
2. Plant materials, mulch, and related materials, see Section 32 9000 - Planting.

C. Pest and Disease Treatment

1. Submit plan for pest and disease treatment; identify proposed materials and methods.
2. Explain why a problem does or may exist.

D. Maintenance Manual

1. Provide a maintenance manual to Owner describing operations for on-going upkeep of the installed plants. The manual shall address itself to specified types and uses of plants installed, and provide information for care of both newly installed plants and long-term maintenance.
2. Provide specific information on the following items:
   a. Watering: Watering season; diagnosis of watering need; frequency of watering; amount; time of day; methods and equipment; equipment maintenance.
   b. Fertilization: Fertilizing seasons; analysis for fertilizer selection; application rates and methods; preparation and conditions; application times; application equipment; post-application operations and care; precautions for fertilizer use.
   c. Liming: Liming season; analysis for liming; application rate; method and equipment for application.
   d. Pruning: Pruning goals and purposes; methods and techniques (relate to species); equipment; season; cleanup and disposal; precautions.
   e. Mulching of beds: Depths of mulch; refreshment and replacement of mulch.
   f. Miscellaneous plant maintenance: Weeding and weed control; pest and disease control; leaf and litter removal; bed edging; professional assistance for plant care; and plant replacement as necessary.
3. Include a month-by-month calendar of maintenance procedures, indicating operations listed above.
4. Include a developed Record Keeping document to be completed by the maintenance staff and submitted weekly to the Owner's Representative during active maintenance period.
5. Submit a copy of maintenance manual to Owner's Representative for approval. Submit prior to planting completion. Owner's Representative may request revisions to manual to meet intent of project design.
6. Submit three copies of manual to Owner at acceptance meeting for planting work. Acceptance shall not be granted until manual has been submitted and approved.

1.6 QUALITY ASSURANCE

A. Qualifications: contractor shall have minimum five years experience in landscape maintenance.

B. Regulatory Requirements

1. Secure permits, licenses, and pay fees including traffic control.
2. Comply with laws, regulations, and quarantines for agricultural and horticultural products.

1.7 DELIVERY, STORAGE AND HANDLING

A. Packing and Shipping: deliver materials in unopened containers bearing the manufacturer's name. Transport materials without damage. Protect finishes from abrasion, dirt, oils, grease, and chemicals. Pack materials to protect from weather.

B. Acceptance at Site: verify in writing that delivered materials conform to specifications and approved submittals.

C. Storage and Protection:

1. The University will not provide areas of storage for the maintenance contractor.
2. Store materials in dry place, on pallets, off the ground; protect from sun.
3. Protect materials from theft, damage, weather, dirt, oils, grease, and construction.

1.8 PROJECT/SITE CONDITIONS

A. Environmental Requirements: do not work soils when dry, wet, or frozen.

1. Field Test

a. Form soil in palm of hand, if soil retains shape and crumbles upon touching, the soil may be worked.
b. If soil will not retain shape it is too dry and should not be worked.
c. If soil retains shape and will not crumble, it is too wet and should not be worked.

B. Planting Seasons: see Section 32 9000 - Planting

1.9 SUBSTANTIAL COMPLETION

A. Upon completion of planting, request Owner's Representative's review to determine if work is substantially complete. If work is complete, Owner's Representative will issue a Letter of Substantial Completion that establishes the effective date of the start of the 2 year Maintenance Period for plantings and turf.

1. If work is not substantially complete, Owner's Representative will make a list of outstanding work to be done on a timely schedule agreed upon by Contractor and Owner's Representative.
2. Contractor shall notify Owner's Representative when outstanding work is accomplished and ready for review. When outstanding work is complete, in the judgment of Owner's Representative, a Letter of Substantial Completion will be issued.

1.10 PRELIMINARY ACCEPTANCE

A. After the Letter of Substantial Completeness the work will be reviewed for completeness and of Preliminary Acceptance

B. Plantings and turf shall be in thriving and vigorous condition at the time of review for Preliminary Acceptance. If plantings and turf are acceptable, Owner's Representative will issue a Letter of Preliminary Acceptance establishing the effective date of the two-year Guaranty Period.

1. If plantings are not thriving, in the judgment of Owner's Representative, remedial actions by Contractor will be required to repair or replace plantings.
2. Remedial work shall be done immediately and in accordance with related work of other sections.
3. At the conclusion of remedial work, Owner's Representative will review work and extend the Guaranty Period to incorporate new plantings.

1.11 FINAL ACCEPTANCE

A. After the 2-year Maintenance and Guaranty Period, plantings and turf will be reviewed.

B. Plantings and turf shall be in thriving and vigorous condition at the time of review for Final Acceptance. If plantings and turf are acceptable, Owner's Representative will issue a Letter of Final Acceptance.

1. If plantings and turf are not thriving, in the judgment of Owner's Representative, remedial actions by Contractor will be required to replace plantings.
2. Remedial work shall be done immediately and in accordance with related work of other sections.
3. At the conclusion of remedial work, Owner's Representative will review work and extend the Maintenance and Guaranty Period until plantings are deemed acceptable.

PART 2 - MATERIALS

2.1 MATERIALS

A. Materials utilized during the maintenance period shall be the same specified in the work of the related sections:

1. Fertilizers, soil amendments, testing, see Section 32 9113 – Planting Soils.
2. Sod and related materials, see Section 32 9219 – Turf and Grasses
3. Plants, mulch, and related materials, see Section 32 9300 - Planting.

2.2 BIOLOGICAL, HORTICULTURAL, HERBICIDAL AND OTHER PEST CONTROL

A. Material Specification: shall be by a licensed pest control operator, with authority to purchase, utilize, and specify agricultural chemicals and agricultural products.

B. Use the least hazardous, least intrusive materials and methods.

2.3 EQUIPMENT

A. Vehicles: in good working order so oil and grease does not stain pavements and poison plantings. Signs identifying the vehicles shall be clearly displayed.

B. Machinery: in good working order so oil and grease does not stain pavements and poison plantings.

2.4 WATER

A. Water: Furnished by Contractor, suitable for irrigation and free from ingredients harmful to plant life.
B. Hoses and other watering equipment to be furnished by Contractor.

PART 3 - EXECUTION

3.1 EXAMINATION

A. Verification of Conditions: in the event field conditions are not as shown on Drawings and outlined in the Specifications, notify Owner's Representative in writing.

3.2 PREPARATION

A. Protection:

1. Agricultural Chemicals: protect site improvements from contact with agricultural chemicals, soil amendments, and fertilizers.

3.3 PRUNING

A. Pruning: prune with approval of Owner's Representative.

1. Remove dead branches, rubbing branches, and branch work growing towards the center of the tree.

3.4 DRAINAGE

A. Observe drainage in plant pits with hand soil augur.

B. Verify plant pits are draining; plant pits not draining shall be identified on the plan and brought to the attention of Owner's Representative.

3.5 PLANTS

A. Maintain plants in vigorous condition throughout the Maintenance and Guaranty Periods.

B. Replace plants that are missing, dead, not true to name or size as specified, or not in satisfactory growth, as determined by Owner's Representative. Replace plants found unacceptable within one month or in first month of next growing season, whichever comes first.

C. Plants must show a minimum of 75% healthy head with obvious growth since planting. Signs of disease, injury, or damage shall have been successfully treated or plant shall be rejected as determined by Owner's Representative.

D. Replacements plants shall be same kind and size as specified in plant list. Furnish and plant. Cost of replacement borne by Contractor except where it can be shown loss resulted from vandalism, fire, theft, or other causes beyond Contractor's control. Restore areas damaged or disturbed by replacement operations to their original condition.

3.6 IRRIGATION

A. Water at a rate of one inch of water every five to seven days. Apply water such that it penetrates the soil to a depth of 6".
B. Trees require a minimum of ten gallons each and shrubs a minimum of five gallons each per week.
C. If spring or fall months experience below average rainfall, periodic watering could be extended as part of this contract and at no additional charge as requested by Owner's Representative.
D. If natural rainfall provides water to meet watering requirements, weekly watering could be reduced but only at the request of Owner's Representative.

3.7 PLANT BASINS

A. Keep foot tamped and shaped earth dikes around plantings.

3.8 TREE GUYS

A. Tree stakes: maintain plumb; adjust flexible ties.

B. Guys: maintain wires taut; adjust turnbuckles; keep flags on wires.

3.9 FINISH GRADE

A. Maintain finish grades around plantings, at pavement edges, and at irrigation fixtures.

3.10 MULCH

A. Maintain mulch at 2" depth in planting areas with the exception of at stems and trunks of plants where mulch to be placed to a 0" depth and increasing to a depth of 2" at edge of rootballs and beyond.

3.11 TREATMENT OF PEST AND DISEASES

A. Spray for both insect pests and diseases during maintenance period with notification and permission of Owner's Representative. Apply herbicides, insecticides and fungicides as prescribed by their manufacturer and in accordance with State laws. Contractor shall possess from the State of Connecticut the proper registrations and permits for application of materials or have applications

made by approved, qualified firm holding registrations and permits. Furnish copies of permits in connection with materials to Owner's Representative. Spraying to be considered only after full consideration has been given to alternative pest control strategies. The least toxic approach to pest control shall be used.

3.12 FIELD QUALITY CONTROL

A. Post Plant Soil Tests: see Section 32 9113 – Planting Soils

3.13 ADJUSTING

A. Re-set settled plants to proper grade and position.

B. Restore planting saucer and adjacent material.

3.14 CLEANING

A. Clean up, remove and dispose off-site excess planting mixture, soil and debris generated under work of this section.

B. Remove and dispose of stakes, guys and other accessories at end of Guaranty Period.

C. Wash and sweep clean site improvements and building surfaces. Clean spills and oversprays immediately.

D. Repair damage caused by maintenance operations.

3.15 PROTECTION

A. Protect work of this section until Final Acceptance.

B Protect planted areas and soils from compaction by construction traffic and from contamination by construction materials.

END OF SECTION 32-9353

PART 1 – GENERAL

1.01 DESCRIPTION

A. Work Included: Furnishing and installing ductile iron water mains and fittings, and appurtenant valves and fittings, complete in place, as shown on the Drawings and as specified.

B. Related Sections:

1. Section 31 20 00 – Earth Moving;

2. Section 31 23 33 – Trenching and Backfilling;

3. Section 32 12 16 – Asphalt Paving.

1.02 REFERENCES

A. ANSI/ASTM D2922 – Density of Soil and Soil-Aggregate in Place by Nuclear Methods (Shallow Depth).

B. AWWA C104 – American National Standard for Cement-Mortar Lining for Cast-Iron and Ductile-Iron Fittings for Water.

C. AWWA C110 – American National Standard for Gray-Iron and Ductile-Iron Fittings, 2 in. through 48 in. for Water and Other Liquids.

D. AWWA C111 – American National Standard for Rubber Gasket Joints for Cast Iron and Ductile Pressure Pipe and Fittings.

E. AWWA C151 – American National Standard for Ductile-Iron Pipe, Centrifugally cast in Metal Molds or Sand-Lined Molds for Water or Other Liquids.

F. AWWA C153 – American National Standard for Ductile-Iron Pipe Compact Fittings 3 Inch through 12 Inch for Water and Other Liquids.

G. AWWA C500 – Metal-Seated Gate Valves for Water Supply Service.

H. AWWA C502 – Dry-Barrel Fire Hydrants.

I. AWWA C550 – Protective Epoxy Interior Coatings for Valves and Hydrants.

J. AWWA C600 – Installation of Gray and Ductile Iron Water Mains and Appurtenances.

K. AWWA C651 – Disinfecting Water Mains.

1.03 QUALITY ASSURANCE

A. Qualifications of installers: Use adequate numbers of skilled workmen who are thoroughly trained and experienced in the necessary crafts and who are completely familiar with the specified requirements and the methods needed for proper performance of the work of this Section.

B. Comply with local water authority standards. The local water authority is University of Connecticut Facilities Dept.

1.04 SUBMITTALS

A. Submit data on the following:

1. Product Data: Provide data indicating pipe, fittings, valves, and pipe accessories.

2. Manufacturer's Installation Instructions: Indicate special procedures required to install the products specified.

3. Manufacturer's Certificate: Certify that products meet or exceed specified requirements.

1.05 DELIVERY, STORAGE AND HANDLING

A. Protection: Use all means necessary to protect the materials of this Section before, during, and after installation, to protect the work and materials of all other trades, and to protect all objects designated to remain.

B. Protection of utilities: Protect existing utilities as specified in Section 31 20 00 – Earth Moving.

C. Delivery and Storage: Deliver all materials to the job site in their original containers with all labels intact and legible at time of use. Store in strict accordance with the manufacturers' recommendations as accepted by the Engineer.

D. Replacements: In the event of damage, immediately make all repairs and replacements necessary to the acceptance of the Engineer and at no additional cost to the Owner.

1.06 REFERENCES

A. Wherever reference is made to the DOT Specifications, it shall mean the Connecticut Department of Transportation Standard Specifications for Roads, Bridges and Incidental Construction Form 816 (2004) as modified by Supplemental Specifications issued by the Connecticut Department of Transportation.

1.07 REGULATORY REQUIREMENTS

A. Relation to sanitary sewer lines: Lay water lines at least 10 feet horizontally from any existing, or proposed, sewer lines if possible. If conditions prevent a lateral separation of 10 feet, a water line may be laid within 10 feet of a sanitary sewer if:

1. It is laid in a separate trench, or if it is laid in the same trench with the sanitary sewer line located at one side of a bench of undisturbed earth, and if;

2. In either case the elevation of the bottom of the water line is at least 18 inches above the top of the sanitary sewer line. Where water lines cross over sewer lines, install the water line so that the bottom of the water line is at least 18 inches above the top of the sewer line. When water, or sewer, location cannot be varied to provide separating distance, construct water line with mechanical joint pipe for a distance of 10 feet either side of sewer. One full length of water line is to be centered over sewer so that both joints will be as far from the sewer as possible.

3. Where it is not possible to obtain horizontal or vertical separation specified above, construct both water line and sewer line of mechanical joint, cement lined ductile iron pipe. Pressure test both pipes at 200 psi in accordance with AWWA C600.

PART 2 – PRODUCTS

2.01 PIPE MATERIALS

A. Ductile Iron Pipe: AWWA C151, Class 54, cement lined in accordance with AWWA C104, 18 foot nominal laying length, push on joints with SBR gaskets in accordance with AWWA C111.

B. Fittings (4”-12”): Compact ductile iron fittings in accordance with AWWA C153, cement lined in accordance with AWWA C104, mechanical joints with SBR gaskets, Corten nuts and bolts and ductile iron retainer glands, where required.

C. Retainer Glands: Ductile iron conforming to ASTM A536, 250 psi minimum working pressure, 2:1 minimum safety factor, Corten nuts and bolts, MEGALUG as manufactured by EBBA iron, Inc.

D. Tapping Sleeve: Fabricated carbon steel with fusion bonded epoxy coating, 200 psi minimum working pressure, SBR gaskets and sealing material, stainless steel bolting materials, provide with NPT test port and plug.

2.02 METAL SEATED GATE VALVES AND TAPPING VALVES

A. Valve: Conform to AWWA C500, mechanical joints ends, ductile iron retainer glands, SBR gaskets, Corten mechanical joint bolts and nuts, non-rising stem, 2" nut operator, 200 psi working pressure, type 304 stainless steel bonnet and O-ring stem seal bolting hardware. All valves shall open to the RIGHT.

B. Valve Box: 5-1/4 inch diameter, cast iron, flared base, slip type, flange top, tapered cover with long skirt and two pick holes, coal tar epoxy coated. Cover to have water identification markings.

C. Valve Extension Stem (if required): Provide self-centering steel valve extension stem with 2" nut operator, coal tar epoxy coated. Top of extension stem to be 1 foot below finished grade.

2.03 BEDDING MATERIAL

A. Sand: Use sand or sandy soil conforming to the requirements of Article M.08.08-21, DOT Specifications.

PART 3 – EXECUTION

3.01 GENERAL

A. Examine the areas and condition under which work of this Section will be performed. Correct conditions detrimental to the timely and proper completion of the Work. Do not proceed until unsatisfactory conditions have been corrected.

3.02 PREPARATION

A. Hand trim excavations to required elevations. Correct over excavation as specified in Section 31 20 00 – Earth Moving.

B. Remove large stones or other hard matter, which could damage pipe or impede consistent backfilling or compaction.

C. Clean pipe and fitting interiors prior to lowering into trench. Keep clean during laying operations.

3.03 BEDDING

A. Excavate pipe trench in accordance with Section 31 20 00 – Earth Moving for work of this Section. Hand trim excavation for accurate placement of pipe to elevations indicated.

B. Place and compact bedding material at trench bottom, level materials in continuous layer.

3.04 INSTALLATION

A. General

1. Carefully examine each pipe prior to placing. Promptly set aside all defective pipe and all damaged pipe. Clearly identify all defects. Do not install defective pipe or damaged pipe.

2. Install pipe, fittings and accessories in accordance with AWWA C600 and manufacturer's instructions. Seal joints watertight.

3. Place all pipe to grades and alignment shown on the Drawings.

4. Provide all equipment for lowering pipe safely into the trenches.

5. Lay pipe by proceeding upgrade with the spigot ends of bell-and-spigot pipe pointing in the direction of flow.

B. When the Engineer has accepted conditions at the bottom of the trench, place and compact the bedding of sand. Provide a bedding surface to support the barrel of the pipe throughout its entire length. Accurately shape the bedding to conform to the lower quarter of the pipe. Make depressions in the bedding for making pipe joints.

C. Make watertight pipe joints. Use gaskets as specified for each kind of pipe. Do the jointing in accordance with the pipe manufacturer's instructions and as follows:

1. Clean gaskets and mating surfaces of pipes. Use lubricant on gaskets and pipes if required by pipe manufacturer. Align pipe to be installed with previously installed pipe, and, with gasket in place, put joint together. After pipes are put together, inspect joint to verify that gasket is properly positioned and that joint has been properly made and is tight. If, while making the joint, the gasket becomes loose or displaced, remove the pipe and remake the joint to the acceptance of the Engineer.

2. Pipe to be installed "in the dry". Do not use pipe for trench drainage. Keep trench dry to prevent pipe floatation.

3. Cap ends of pipe when work is not in progress.

4. All mechanical joint fittings, bends, etc. shall be restrained a minimum of three (3) pipe lengths on either side of the fitting.

3.05 INSTALLATION OF TAPPING SLEEVE AND VALVE

A. Tapping of the water main shall be performed by the Contractor. The Contractor shall excavate as necessary to provide adequate space for tapping sleeve and valve installation.

3.06 INSTALLATION OF GATE VALVES

A. Install valves at locations indicated on the Drawings.

B. Provide a firm foundation and side support by tamping bedding material under and at the sides of the valves. Install valves with valve stems vertical.

C. Install valve boxes over valves such that vertical stems of valves are coincident with centerlines of valve boxes. Set boxes firmly in place by tamping bedding material under and at the sides of the boxes. Support valve boxes during backfilling; maintain vertical alignment. Install so that top of valve box is flush with final grade.

D. Install valve stem extensions of correct lengths on valves.

3.07 CONCRETE CRADLES, CONCRETE ENCASEMENTS AND CONCRETE THRUST BLOCKS

A. Construct concrete cradles, concrete encasements and concrete thrust blocks for additional support or protection of pipe at locations indicated on the Drawings or as directed by the Engineer.

3.08 COVER AND BACKFILL FOR PIPES

A. Protect finished installation from damage.

B. Place and compact sand blanket to two (2’) feet above pipe so that all the space in the trench on each side of the pipe is entirely filled and well compacted.

C. Place warning tape over pipe as shown on the drawings. Tape shall clearly indicate "Buried Water Line" and be composed of a metallic material so as to be detectable by magnetic underground location indicators.

D. Place and compact suitable backfill material over sand blanket. Backfill in accordance with the requirements specified under Section 31 23 33 – Trenching and Backfilling.

3.09 PRESSURE TESTING AND DISINFECTION

A. The Contractor shall perform all testing and disinfecting required, at no additional cost to the Owner.

B. Arrange for local water authority to witness this work.

C. After installation of each waterline section, pipelines shall be tested for water tightness in accordance with AWWA C600. For these tests, the Contractor shall furnish suitable testing plugs or caps, all necessary pressure pumps, pipe connections, gages, or other equipment, all labor, and all water required.

D. Conduct leakage test at a pressure of 200 psi unless otherwise specified and maintain this pressure for 2 hours.

E. Before being placed in service, the completed water distribution system shall be disinfected in accordance with AWWA 651, "Standard Procedure for Disinfecting Water Mains." The Engineer shall approve the specific procedure before doing the work.

F. Water used to disinfect the water distribution system shall be chlorine neutralized as it is discharged from the system.

G. Perform bacterial and water quality testing to demonstrate compliance with applicable water quality standards. Sampling to be accomplished through sampling taps. Use of hydrants for sampling is prohibited.

H. Disinfect, flush and test water distribution system, repeatedly as required at Contractor's expense, to comply with applicable water quality standards.

END OF SECTION

PART 1 – GENERAL

1.01 DESCRIPTION

A. Work Included: Construction of sanitary sewers, manholes and related work, complete in place, as shown on the Drawings and as specified. Leakage testing of sanitary sewers and manholes will also be required.

B. Related Sections:

1. Section 31 20 00 – Earth Moving;

2. Section 31 23 33 – Trenching and Backfilling;

3. Section 31 25 13 – Erosion and Sedimentation Controls.

1.02 QUALITY ASSURANCE

A. Qualifications of installers: Use adequate numbers of skilled workmen who are thoroughly trained and experienced in the necessary crafts and who are completely familiar with the specified requirements and the methods needed for proper performance of the work of this Section.

1.03 SUBMITTALS

A. Submit Product Data

1. Manufacturers' descriptive literature for all items proposed to be furnished and installed under this Section, including Material Safety Data Sheets (MSDS) on all PVC adhesives and primers.

2. Manufacturer's specifications and other data required to demonstrate compliance with the specified requirements.

3. Verification of installer’s qualifications.

1.04 DELIVERY, STORAGE AND HANDLING

A. Protection: Use all means necessary to protect the materials of this Section before, during, and after installation, to protect the work and materials of all other trades, and to protect all objects designated to remain.

B. Delivery and Storage: Deliver all materials to the job site in their original containers with all labels intact and legible at time of use. Store in strict accordance with the manufacturers' recommendations as accepted by the Engineer.

C. Replacements: In the event of damage, immediately make all repairs and replacements necessary to the acceptance of the Engineer and at no additional cost to the Owner.

1.05 REFERENCES

A. Wherever reference is made to the DOT Specifications, it shall mean the Connecticut Department of Transportation Standard Specifications for Roads, Bridges and Incidental Construction Form 816 (2004) as modified by Supplemental Specifications issued by the Connecticut Department of Transportation.

PART 2 – PRODUCTS

2.01 PIPE MATERIALS

A. Polyvinyl Chloride Pipe

1. Pipe: ASTM D3034, SDR 35 (Sizes: 4-15 in.)

2. Joints: Bell and spigot with O-ring gasket compressed between the bell and the spigot.

3. Gasket: Rubber gasket conforming to the requirements of AASHTO M198 or elastomeric gasket conforming to the requirements of ASTM D3212.

B. Provide fittings or couplings for joining pipes of different materials or provide concrete for fabricating a concrete collar where pipes of different materials are joined.

2.02 MANHOLE MATERIALS

A. Precast Reinforced Concrete Manhole Sections: Bases, manhole entrance slabs, riser sections, and conical sections shall conform to dimensions as shown on the Drawings and to the requirements of ASTM C478. All joints between sections shall be tongue and groove joints with recesses for rubber O-ring gaskets.

B. Rubber O-ring gaskets for joints shall conform to the requirements for rubber gaskets as specified under 5.9 Rubber Gaskets, ASTM C361.

C. Manhole Steps: Copolymer Polypropylene Plastic Manhole steps with serrated safety tread. Do not install steps by drilling and mortaring in place after casting of manhole sections.

D. Holes shall be preformed in the walls of base sections to accept sewer pipe. Flexible sleeves shall be cast into the preformed holes, as shown on the Drawings. The sleeves shall be made to fit and to be clamped around the pipe with stainless steel bands.

E. Alternatively, sleeves with internal-expanding stainless steel clamps may be used to install sleeves in preformed pipe holes.

F. Grout shall conform to Subarticle M.03.01-12 of the DOT Specifications.

G. Lubricant for use on joints and for use on O-ring rubber gaskets shall be an accepted vegetable soap compound.

H. Mortar shall conform to Article M.11.04 of the DOT Specifications.

I. Concrete grading rings, if used, shall conform to the requirements of ASTM C139.

J. Bricks used for adjusting frames to grade shall conform to the requirements of AASHTO M91, Grade MS. Bricks used for constructing inverts shall conform to the requirements of AASHTO M91, Grade SM.

K. Manhole frames and covers shall be standard models as shown on the Drawings. Material shall be cast iron conforming to the requirements of AASHTO M105, Class 25. Covers shall bear uniformly on their supports.

L. Dampproofing material and primer shall conform to the requirements of Article M.12.05 of the DOT Specifications.

2.03 BEDDING, COVER AND BACKFILL MATERIALS

A. Crushed stone for bedding shall be sound, tough and durable; it shall be free from soft, thin elongated, or laminated pieces and vegetable or other deleterious substances. Grading Article M.01.01, DOT Specifications. Size: As indicated on the Drawings.

B. Sand Blanket for Cover: Use sand or sandy soil conforming to the requirements of Article M.08.08-21 of the DOT Specifications.

C. Geotextile Filter Cloth: Section 31 23 33 – Trenching and Backfilling.

D. Suitable Backfill Material: Section 31 23 33 – Trenching and Backfilling

PART 3 – EXECUTION

3.01 GENERAL

A. Examine the areas and condition under which work of this Section will be performed. Correct conditions detrimental to the timely and proper completion of the Work. Do not proceed until unsatisfactory conditions have been corrected.

3.02 CONNECTIONS

A. Where a new pipe is to be connected into an existing manhole, the Contractor shall carefully cut into the existing manhole to obtain the minimum diameter hole required to construct the sewer to the line and grade indicated on the plans. The use of blunt instruments or excessive force will not be permitted.

B. The hole around the pipe shall be carefully sealed with non-shrink grout to obtain a watertight connection. A suitable invert channel, compatible with the existing formed invert, shall then be formed in the bottom of the existing manhole to the satisfaction of the Engineer.

3.03 CLEANING PIPELINES, MANHOLES AND APPURTENANCES

A. Upon completion of construction, all dirt and other foreign material shall be removed from pipelines and manholes. No materials shall be left to impede sewage flows.

END OF SECTION

PART 1 – GENERAL

1.01 DESCRIPTION

A. Work Included: Storm drain pipes, catch basins, manholes and related work, complete in place, as shown on the Drawings and as specified.

B. Related Sections:

1. Section 31 20 00 – Earth Moving;

2. Section 31 23 33 – Trenching and Backfilling;

3. Section 31 25 13 – Erosion and Sedimentation Controls.

1.02 QUALITY ASSURANCE

A. Qualifications of installers: Use adequate numbers of skilled workmen who are thoroughly trained and experienced in the necessary crafts and who are completely familiar with the specified requirements and the methods needed for proper performance of the work of this Section.

1.03 SUBMITTALS

A. Product Data:

1. Manufacturers' descriptive literature for all items proposed to be furnished and installed under this Section, including Material Safety Data Sheets (MSDS) on all PVC adhesives and primers.

2. Manufacturer's specifications and other data required to demonstrate compliance with the specified requirements.

3. Manufacturers' recommended installation procedures which, when accepted by the Owner, shall become the basis for inspecting and accepting or rejecting actual installation procedures used on this Work.

4. Verification of installer’s qualifications.

1.04 DELIVERY, STORAGE AND HANDLING

A. Protection: Use all means necessary to protect the materials of this Section before, during, and after installation, to protect the work and materials of all other trades, and to protect all objects designated to remain.

B. Delivery and Storage: Deliver all materials to the job site in their original containers with all labels intact and legible at time of use. Store in strict accordance with the manufacturers' recommendations as accepted by the Architect.

C. Replacements: In the event of damage, immediately make all repairs and replacements necessary to the acceptance of the Architect and at no additional cost to the Owner.

1.05 REFERENCES

A. Wherever reference is made to the DOT Specifications, it shall mean the Connecticut Department of Transportation Standard Specifications for Roads, Bridges and Incidental Construction Form 816 (2004) as modified by Supplemental Specifications issued by the Connecticut Department of Transportation.

PART 2 – PRODUCTS

2.01 PIPE MATERIALS

A. Polyvinyl Chloride Pipe

1. Pipe: ASTM D3034, SDR 35 (Sizes: 4-15 in.)

2. Joints: Bell and spigot with O-ring gasket compressed between the bell and the spigot.

3. Gasket: Rubber gasket conforming to the requirements of AASHTO M198 or elastomeric gasket conforming to the requirements of ASTM D3212.

4. For Perforated pipe, make perforations 5/8-in. diameter on 5-in. centers, 120 degrees apart.

B. Reinforced Concrete Pipe

1. Pipe: Article M.08.01-6, DOT Specifications.

2. Gasket: Article M.08.01-20, DOT Specifications.

C. High Density Polyethylene Pipe

1. Pipe: All high-density polyethylene pipe shall have corrugated exterior and smooth interior and shall meet the following:

Sizes 3" to 10"	AASHTO M252,	ASTM D3350 324420C
Sizes 12" to 38"	AASHTO M294,	ASTM D3350 335420C

2. Coupling: Water Tight: Couplings designated on the drawings as watertight shall be gasketed, bell and spigot in accordance with the respective AASHTO specification. The bell shall be an integral part of the pipe for sizes up to and including 36" and shall provide a minimum pull apart strength of 400 pounds. Joints shall be accepted as water tight after passing a field air test after installation to ensure a leakage rate not to exceed 200 GPD/in = dia/mile or, in lieu of a field test, shall be accepted as water tight based on the manufacturer's certification that the leakage rate does not exceed 200 GPD/in-dia/mile based on laboratory testing.

2.02 CATCH BASINS, YARD DRAINS, AND MANHOLES

A. Materials shall conform to the requirements of Article M.08.02 of the DOT Specifications.

B. Protective compound material: Article M.03.01-11 of the DOT Specifications.

C. Mortar: Article M.11.04 of the DOT Specifications.

D. Pervious material: Article M.02.05 of the DOT Specifications.

E. Galvanize steel frames and grates in accordance with the requirements of Article M.06.03, DOT Specifications. Do not galvanize cast iron frames and grates.

2.03 BEDDING, BASE, COVER AND BACKFILL MATERIALS

A. Crushed stone for bedding shall be sound, tough and durable; it shall be free from soft, thin elongated, or laminated pieces and vegetable or other deleterious substances. Grading Article M.01.01, DOT Specifications. Size: As indicated on the Drawings.

B. Suitable Backfill Material: Section 31 23 33 – Trenching and Backfilling.

PART 3 – EXECUTION

3.01 GENERAL

A. Examine the areas and condition under which work of this Section will be performed. Correct conditions detrimental to the timely and proper completion of the Work. Do not proceed until unsatisfactory conditions have been corrected.

3.02 EXCAVATION

A. Make excavations for catch basins, infiltration basins, yard drains, manholes, pipes and other drainage items in accordance with the provisions of Section 31 20 00 – Earth Moving and Section 31 23 33 – Trenching and Backfilling.

B. Protect bottoms of excavations from frost. Do not place bedding, structures, pipes, or fill materials on frozen ground.

C. Provide dewatering as specified under Section 31 20 00 – Earth Moving. Keep excavations dry.

3.03 LAYING PIPE; JOINTING PIPE

A. General

1. Carefully examine each pipe prior to placing. Promptly set aside all defective pipe and all damaged pipe. Clearly identify all defects. Do not install defective pipe or damaged pipe.

2. Place all pipe to grades and alignment shown on the Drawings.

3. Provide all equipment for lowering pipe safely into the trenches.

4. Lay pipe by proceeding upgrade with the spigot ends of bell-and-spigot pipe, and the tongue ends of tongue-and-groove pipe pointing in the direction of flow.

B. When the Owner has accepted conditions at the bottom of the trench, place and compact the bedding of crushed stone. Provide a bedding surface to support the barrel of the pipe throughout its entire length. Accurately shape the bedding to conform to the lower quarter of the pipe. Make depressions in the bedding for making pipe joints.

C. Make watertight pipe joints. Use gaskets as specified for each kind of pipe. Do the jointing in accordance with the pipe manufacturer's instructions and as follows:

1. Clean gaskets and mating surfaces of pipes. Use lubricant on gaskets and pipes if required by pipe manufacturer. Align pipe to be installed with previously installed pipe, and, with gasket in place, put joint together. After pipes are put together, inspect joint to verify that gasket is properly positioned and that joint has been properly made and is tight. If, while making the joint, the gasket becomes loose or displaced, remove the pipe and remake the joint to the acceptance of the Architect.

D. Fill depressions under joints with granular fill bedding material and compact the material thoroughly.

E. Joining pipe of different materials: Provide fittings or couplings made for the pipe materials joining, or provide a concrete collar.

F. Place and compact bedding material (granular fill or in the case of underdrains, crushed stone) around both sides of pipe and over the top of the pipe as shown on the Drawings.

G. Place warning tape over pipe as shown on the drawings. Tape shall clearly indicate "Buried Storm Line" and be composed of a metallic material so as to be detectable by magnetic underground location indicators.

H. Place and compact suitable backfill material over bedding (cover) material as shown on the Drawings and in accordance with the requirements of Section 31 20 00 – Earth Moving and Section 31 23 33 – Trenching and Backfilling.

3.04 CONSTRUCTION OF CATCH BASINS, YARD DRAINS AND MANHOLES

A. When conditions at the bottom of the excavation are satisfactory to the Owner, place and compact the granular fill base. Bring the top of the granular base to the proper grade. Make granular base flat to uniformly support catch basin, yard drain, or manhole.

B. Construct catch basins, manholes, etc. and join pipes to structures in accordance with requirements of Article 5.07.03 of the DOT Specifications. Those requirements include:

1. Lay masonry units and metal frames in full mortar beds. In addition to the requirements of Article 5.07.03, apply a field coat of SS-1 emulsion to metal frames, grates and covers immediately before installation.

2. Plan to backfill with pervious material to extent indicated; provide a drainage opening in each wall immediately above the bottom of the pervious material, as indicated.

3. If cast-in-place concrete is used for tops, use bar reinforcement and apply protective compound material as indicated. Comply with other applicable requirements of Article 5.07.03.

C. When structures are constructed in sandy soils, apply damp proofing to outside wall surfaces.

D. Coordinate the backfilling work using suitable backfill material where indicated and pervious backfill material where indicated. Conform to backfilling requirements of Section 31 20 00 – Earth Moving and Section 31 23 33 – Trenching and Backfilling.

3.07 PIPE CONNECTIONS TO EXISTING DRAINAGE STRUCTURES

A. When connecting a new pipe into an existing drainage structure, carefully cut into the structure to produce the smallest possible hole for the pipe. Do not use blunt instruments or excessive force in cutting the hole. Locate the hole so that, when connected, the pipeline will be at line and grade indicated on the Drawings.

B. Carefully seal around the pipe with an acceptable non-shrink grout to obtain a watertight connection.

3.08 BACKFILLING

A. Backfill and compact backfill material in accordance with the provisions of Section 31 20 00 – Earth Moving and Section 31 23 33 – Trenching and Backfilling.

B. Where accepted by the Owner, sheeting and portions of bracing used may be left in place. Do not leave untreated sheeting in place beneath structures or pavements.

3.09 RAISING MANHOLES AND CATCH BASINS

A. Within the project area, raise all existing manholes and catch basins to finished grade.

B. Precast Concrete Manholes and Catch Basins

1. Raise by adding additional precast riser sections or by adding courses of brick or block as indicated on the Drawings.

2. If the total depth of adjusting brick or block exceeds 12 inches, raise by using precast riser sections. With brick or block, final adjustment not to exceed 12 inches.

C. Brick or Block Manholes and Catch Basins

1. Raise manholes in kind.

2. If the total depth of the manhole or Catch Basin (top of frame to lowest invert) will be increased to more than eight feet, rebuild the manhole or catch basin using 12-inch thick brick or block.

D. Reset existing frames and covers except where the Drawings call for replacement.

END OF SECTION

SECTION 334600 - FOUNDATION DRAINAGE SYSTEMS

PART 1 - GENERAL

1.1 GENERAL PROVISIONS

A. Drawings and general provisions of the Contract, including General and Supplementary Conditions and Division I Specification Sections, apply to this Section.

B. Examine all Drawings and all other Sections of the Specifications for requirements therein affecting the work of this Section.

C. Coordinate work with that of all other trades affecting or affected by the Work of this Section. Cooperate with such trades to assure the steady progress of all work under the Contract.

1.2 DESCRIPTION OF WORK

A. The work of this Section shall include materials, labor, equipment, and incidentals to complete including, but not limited to, the following:

1. Installing permanent building foundation perimeter and underslab drain systems with applicable connections to discharge locations as shown on the Drawings.

2. Furnishing sleeves for locations where drains pass through concrete foundation walls, and sealing annular space between sleeves and drain piping.

1.3 RELATED SECTIONS

A. Section 312400 – Building Earthwork

1.4 REFERENCE DOCUMENTS

A. Prior to submitting a bid, the Contractor shall review and understand the information and reports referenced in Section 312400.

1.5 DEFINITIONS

A. Owner: University of Connecticut

B. Architect: Mitchell – Giurgola Architects, LLP

C. Engineer: Authorized representatives of the Architect or Owner. For the work covered under this Section, this term will include Haley & Aldrich, Inc.

D. Contractor: Person or organization, or an authorized representative, identified in the Agreement as being responsible for the work under this Section.

1.6 QUALITY ASSURANCE

A. The Contractor shall install the foundation drainage systems in compliance with applicable requirements of governing authorities having jurisdiction over this Work, and in accordance with the requirements herein and in other applicable Sections.

1.7 SITE AND PROJECT CONDITIONS

A. Before commencing work, the Contractor shall check and verify all governing dimensions and elevations, including field measurements of existing and adjoining work on which its work is dependent to assure proper fit and clearances of each part of the work to the new and existing structures.

1.8 SUBMITTALS:

A. Submittals, including re-submittals as necessary, shall be provided to and reviewed by the Engineer prior to starting backfilling or installation of drainage systems. All submittals shall be provided to the Engineer a minimum of two (2) weeks prior to planned implementation on the project.

B. The time period(s) for submittals are the minimum required by the Engineer to review, comment and respond to the Contractor. The Engineer may require resubmission(s) for various reasons. The Contractor shall provide the specified submittals and resubmittals so as to prevent delays in the work.

C. Review of the Contractor's submittals by the Engineer does not relieve the Contractor of the responsibility for the adequacy of the installation of the foundation drainage systems.

D. The following information shall be submitted to the Engineer in accordance with the general conditions of the Contract:

1. Manufacturer Material Safety Data Sheet (MSDS) for each manufactured product.

2. Manufacturer literature and technical data for: (1) drainage pipe, solid pipe and pipe fittings; (2) filter fabric; (3) cleanouts for foundation perimeter drains; and (4) prefabricated (geocomposite) drainage board products.

3. Source and 50-lb bag samples for each backfill material for foundation drainage systems.

PART 2 - PRODUCTS

2.1 FOUNDATION PERIMETER DRAIN SYSTEM

A. All drainage system materials shall be new and undamaged.

B. Underslab Drain Pipe: 4-in. diameter perforated, Schedule 40 PVC pipe (½-in. maximum diameter holes paired at 120 degrees on pipe) complete with bends, couplers, adapters,

collars and joint materials. Underslab drain piping shall be installed at the locations and inverts shown on the Drawings.

C. Foundation Perimeter Drain Pipe: 6-in. diameter perforated, Schedule 40 PVC pipe (½-in. maximum diameter holes paired at 120 degrees on pipe) complete with bends, couplers, adapters, collars and joint materials. Foundation perimeter drain piping shall be installed at the locations and inverts shown on the Drawings.

D. Filter Fabric:

1. Fibers used in the manufacture of geotextile, and the threads used in joining geotextiles by sewing, shall consist of long-chain synthetic polymers composed of at least 85 percent by weight polyolefine, polyesters, or polyamides. This shall be formed into a network such that the filaments or yarns retain dimensional stability relative to each other, including selvedges. These materials shall conform to the physical requirements of 2.3 C below. Suitable materials include but are not limited to Propex Geotex 601, Mirafi 160N, and Contech C-60NW.

2. Geotextile rolls shall be furnished with suitable wrapping for protection against moisture, and extended ultraviolet exposure prior to placement. Each roll shall be labeled or tagged to provide product identification sufficient for inventory and quality control purposes. Rolls shall be stored in a manner which protects them from the elements. If stored outdoors, they shall be elevated and protected with a waterproof cover.

3. Geotextile shall meet the following criteria:

MIN. REQUIREMENT	
Property	
Grab Strength (lbs.)	160
Seam strength (lbs.)	140
Puncture strength (lbs.)	80
Burst strength (lb./in. 3)	290
Trapezoidal tear (lbs.)	50
Apparent opening size U.S. std. sieve	Greater than No. 30 sieve
Permeability (cm/s)	k fabric >k soil for all classes
Ultraviolet degradation at 150 hours	70% strength retained for all classes

E. Compacted Granular Fill: Refer to Section 312400.

F. ¾-in. Washed Crushed Stone (Crushed Stone): Refer to Section 312400.

G. Impervious Fill: Refer to Section 312400.

H. Clean-outs: For foundation perimeter drain system, the Contractor shall propose a clean-out box for review and approval by the Engineer. PVC riser pipe for foundation drainage system shall be connected to drain pipe with a T-wye and 45-degree bend combination, surrounded by cast-in-place concrete as needed to reinforce the connection and prevent damage during construction. The connections shall be oriented such that water can be flushed toward downgradient portions of the system or toward discharge points in the event that system cleaning is necessary. Cleanouts shall be provided at the locations shown on the Drawings or indicated in the Specifications.

I. Balance of materials shall be as indicated on the Drawings and/or as specified elsewhere in the Contract Documents.

PART 3 - EXECUTION

3.1 SUBGRADE PREPARATION

A. Coordinate the Work of this Section and other Sections and take measures necessary to prevent disturbance of prepared subgrades or undermining of any soil or rock-supported elements, underslab drain pipes or utilities, excavation support systems, and soil surfaces to receive backfill.

B. Unless otherwise specified in Section 312400, subgrades shall be proof-compacted with at least four passes of suitable compaction equipment until firm. Remove accumulated water, silt, trash, debris or deleterious material from the subgrade.

3.2 INSTALLATION OF DRAINAGE SYSTEM

A. General

1. Install foundation drainage systems to the lines and grades shown on the Drawings.

2. Foundation drainage systems shall not be used for temporary dewatering without the written permission of the Engineer.

3. Minimize foot and vehicle traffic over installed drainage systems.

4. Components of the drainage system that are damaged or contaminated with soil or other deleterious materials shall be replaced by the Contractor at no additional cost to the Owner.

5. Penetrations through foundation walls and footings shall be accomplished by providing sleeve pipes cast into and through these elements or by drilling holes through the elements if approved by the Engineer. The Contractor shall not chip or chisel holes to construct the sleeves. After centering the drain pipe in the hole, the annular space between sleeve pipes and drain pipes shall be sealed with a non-degradable, elastic sealant material proposed by the Contractor and approved by the Engineer. Sleeves shall provide a 2-in. minimum annular space between the pipe and the sleeve all around. Rigid materials shall not be placed between the pipe and sleeve.

6. Provide backflow preventer at building foundation drainage system discharge to sewer manhole to prevent water from backflowing into the drainage system.

B. Foundation Perimeter Drain System

1. Prepare excavation subgrade to receive foundation perimeter drain system in accordance with Section 312400.

2. Dampproof foundation walls as shown on the Drawings.

3. Place filter fabric over prepared surfaces and sides of excavation as shown on the Drawings. Provide sufficient lengths of filter fabric such that the Crushed Stone will be completely separated from other soil or rock upon completion of drain installation. Provide at least 12 in. overlap between adjoining sections of filter fabric.

4. Install Crushed Stone and foundation perimeter drain pipe over filter fabric. Lay perforated pipe with perforations down. Provide 6 in. minimum cover of Crushed Stone around entire pipe. Fully wrap Crushed Stone with filter fabric.

5. Backfill remainder of foundation wall with Compacted Granular Fill. Compacted Granular Fill shall extend a minimum of 3 ft off the foundation wall and to within 1 ft of finished grade in landscape areas and to pavement section subgrade in paved or sidewalk areas.

6. In landscape areas, backfill final 12 in. with Low Permeability Fill.

C. Underslab Drain System

1. Prepare excavation subgrade to receive underslab drain system in accordance with Section 31 23 11.

2. In areas where the subgrade consists of soil, place filter fabric over prepared subgrade with a minimum 12-in. return up the sides of foundation elements (as applicable), to separate the Crushed Stone from the subgrade soils as shown on the Drawings. Provide 12-in. minimum overlap between adjacent pieces of filter fabric.

3. In areas where the subgrade consists of bedrock or blast rock (as applicable), choke voids as necessary and where directed by the Engineer with suitably sized free-draining backfill prior to placing the Crushed Stone.

4. Place Crushed Stone to the invert of the perforated drain pipe over the limits shown on the Drawings. Compact Crushed Stone with several passes of suitable vibratory compaction equipment or using other means proposed by the Contractor and approved by the Engineer.

5. Install underslab drain pipes at the locations and grades shown on the Drawings. Interior of all piping shall be completely free of foreign matter before installation and shall be kept clean during construction. Lay perforated pipe with perforations down. Provide collars and couplings as required Pipe sections and fittings shall be cleaned and joined using adhesives or other means in accordance with manufacturer recommendations.

6. Install cleanouts and related access fixtures at the locations and configurations shown on the Drawings. Cleanouts must be accessible during and after construction.

7. Place and hand-tamp Crushed Stone around pipes. Place remaining Crushed Stone to slab subgrade level or where part of the design to the vapor barrier or radon system subgrade level as applicable. Compact Crushed Stone with several passes of suitable vibratory compaction equipment or using other means proposed by the Contractor and approved by the Engineer.

8. Maintain underslab drain system free of deleterious materials and other potential clogging contaminants at all times before and after concrete pours.

3.3 SYSTEM VERIFICATION AND FLUSHING

A. After installation, if requested by the Engineer, the foundation perimeter drain system shall be flushed by introducing potable water, at a continuous rate of at least 10 gallons per minute, into each cleanout in the presence of the Engineer to verify the continuity of each branch of the system. Flushing of each branch shall continue until clean water flows to the discharge location and has been verified by the Engineer. Cleaning or repairs to the system shall be performed if the flushing indicates clogging or other problems with the system. Flushing may not be required if, in the opinion of the Engineer, the system is deemed without flushing to be installed and operating properly.

3.4 RECORD DATA

A. Prior to final acceptance of drainage system, provide as-built plan showing locations and invert elevations of all pipes to be shown on a Record Drawing.

PART 4 - MEASUREMENT AND PAYMENT

4.1 GENERAL

A. Building foundation drainage systems will not be measured but will be paid for as part of the Base Contract Price and shall include furnishing all labor, equipment, materials, and incidentals necessary to complete the Work specified herein and shown on the Drawings.

END OF SECTION