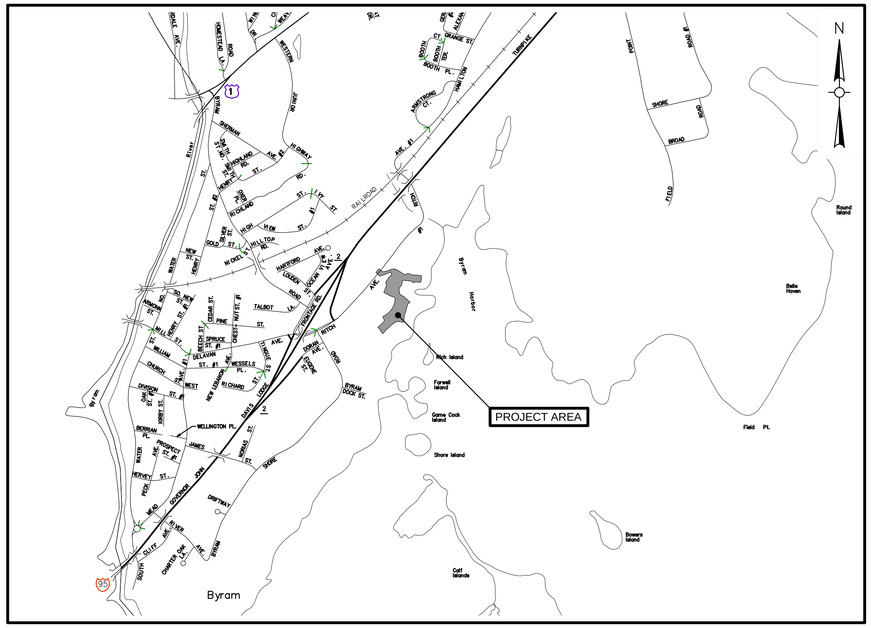

LOCATION MAP
SCALE: 1"=1000'

TOWN OF GREENWICH
DEPARTMENT OF PUBLIC WORKS

BYRAM PARK POOL REPLACEMENT

RITCH AVENUE WEST
GREENWICH, CONNECTICUT

CONSTRUCTION DOCUMENTS
12/11/15

Weston&Sampson®

273 Dividend Road, Rocky Hill, Connecticut 06067

R:\Greenwich CT\Greenwich Parks and Recreation\Byram Park\CAD

SHEET INDEX

1 – CIVIL / LANDSCAPE	
G1.00	ABBREVIATIONS, NOTES, AND LEGEND
G1.01	ADDITIONAL NOTES
C1.00	EXISTING CONDITIONS PLAN
C1.01	DEMOLITION PLAN
C2.00	OVERALL SITE PLAN
C2.01	LOW IMPACT DEVELOPMENT PLAN
C3.00	SITE LAYOUT PLAN–SOUTH
C3.01	SITE LAYOUT PLAN–NORTH
C3.02	PARKING LOT CENTERLINE PROFILE
C3.03	PARKING LOT BASELINE GEOMETRY AND CURB RADIUS SCHEDULE
C4.00	GRADING AND DRAINAGE PLAN–SOUTH
C4.01	GRADING AND DRAINAGE PLAN–NORTH
C4.01A	MAINTENANCE ROAD DRAINAGE IMPROVEMENT PLAN
C5.00	EROSION AND SEDIMENTATION CONTROL PLAN
C6.00	UTILITY PLAN–SOUTH
C6.01	UTILITY PLAN–NORTH
C6.02	UTILITY PROFILE–NORTH
D1.00	EROSION & SEDIMENT CONTROL DETAILS
D1.01	SANITARY DETAILS
D1.02	WATER DETAILS
D1.03	DRAINAGE DETAILS
D1.04	DRAINAGE DETAILS
D1.05	PARKING AREA DETAILS
D1.06	MISCELLANEOUS DETAILS
D1.07	MISCELLANEOUS DETAILS
L2.00	LANDSCAPE/HARDSCAPE PLAN–SOUTH
L2.01	LANDSCAPE/HARDSCAPE PLAN–NORTH
L3.00	HARDSCAPE & AMENITIES PLAN–SOUTH
L4.00	LANDSCAPE & HARDSCAPE DETAILS
L4.01	LANDSCAPE & HARDSCAPE DETAILS 2
L4.02	LANDSCAPE & HARDSCAPE DETAILS 3
L4.03	LANDSCAPE & HARDSCAPE DETAILS 4
2 – STRUCTURAL	
S0.00	GENERAL NOTES
S0.01	TYPICAL DETAILS 1
S0.02	TYPICAL DETAILS 2
S1.00	FOUNDATION PLAN MAIN BUILDING
S1.01	FOUNDATION PLAN AND SECTIONS FILTER BUILDING AND ENTRANCE BUILDING
S1.02	FOUNDATION SECTIONS AND DETAILS
S2.00	SLAB PLAN MAIN BUILDING
S2.01	SLAB PLAN FILTER BUILDING AND ENTRANCE BUILDING
S3.00	ROOF FRAMING PLAN MAIN BUILDING
S3.01	ROOF PLAN FILTER BUILDING AND ENTRANCE BUILDING
S3.02	TRUSS ELEVATIONS AND DETAILS
CS1.00	STRUCTURAL DETAILS
CS1.01	STRUCTURAL DETAILS
CS1.02	STRUCTURAL DETAILS
CS2.00	STRUCTURAL DETAILS

2 – STRUCTURAL CONTINUED	
CS2.01	STRUCTURAL DETAILS
CS2.02	ENTRANCE WALL ELEVATION, SECTION AND PLAN
CS2.03	SLAB PLAN
3 – ELECTRICAL	
E1.00	ELECTRICAL LEGEND
E2.01	ELECTRICAL SITE PLAN
E2.02	ELECTRICAL POOL BONDING PLAN
E3.00	ELECTRICAL MAIN BUILDING LIGHTING PLAN
E3.01	ELECTRICAL MAIN BUILDING POWER PLAN
E3.02	ELECTRICAL KITCHEN POWER PLAN
E3.03	ELECTRICAL FILTER BUILDING PLAN
E4.00	ELECTRICAL ONE LINE DIAGRAM
E5.00	ELECTRICAL SCHEDULES
E6.00	ELECTRICAL DETAILS
4 – MECHANICAL	
M10.1	PROCESS/ MECHANICAL SCHEDULES AND ABBREVIATIONS
M10.2	PUMPING STATION PLAN AND PROFILE
M10.3	MECHANICAL DETAILS
M10.4	MECHANICAL DETAILS
5 – HVAC	
H0.00	HVAC LEGEND
H1.01	HVAC FLOOR PLAN
H2.01	HVAC SCHEDULE
H3.01	HVAC DETAILS
6 – PLUMBING	
P0.00	PLUMBING LEGEND AND SCHEDULE
P1.00	PLUMBING UNDERSLAB PLAN
P1.01	PLUMBING FLOOR PLAN
P2.01	PLUMBING DETAILS
P2.02	PLUMBING RISER DIAGRAMS
7 – ARCHITECTURAL – BUILDINGS	
A0.00	ABBREVIATIONS, LEGEND, NOTES & WALL TYPES
A0.01	EXTERIOR & INTERIOR BUILDING SIGNAGE
A0.02	CODE & LIFE SAFETY PLAN
A1.00	OVERALL FLOOR PLAN – MAIN BUILDING
A1.01	OVERALL FLOOR PLANS – ENTRY GATE & FILTER BUILDING
A1.02	OVERALL REFLECTED CEILING PLAN – MAIN BUILDING
A1.03	OVERALL REFLECTED CEILING PLANS – ENTRY GATE & FILTER BUILDING
A1.04	OVERALL ROOF PLAN – MAIN BUILDING
A1.05	OVERALL ROOF PLANS – ENTRY GATE & FILTER BUILDING
A2.00	EXTERIOR ELEVATIONS – MAIN BUILDING
A2.00A	EXTERIOR ELEVATIONS – MAIN BUILDING – ALTERNATE
A2.01	EXTERIOR ELEVATIONS – MAIN BUILDING
A2.01A	EXTERIOR ELEVATIONS – MAIN BUILDING – ALTERNATE
A2.02	EXTERIOR ELEVATION – ENTRY GATE
A2.03	EXTERIOR ELEVATIONS – FILTER BUILDING
A2.03A	EXTERIOR ELEVATIONS – FILTER BUILDING – ALTERNATE
A3.00	BUILDING SECTION – MAIN BUILDING

7 – ARCHITECTURAL – BUILDINGS CONTINUED	
A3.01	BUILDING SECTION – ENTRY GATE & FILTER BUILDING
A5.00	MILLWORK DETAILS
A5.01	DETAILS
A6.00	ROOM FINISH & DOOR SCHEDULE AND DOOR DETAILS
A6.01	WINDOW SCHEDULE & DETAILS
A6.02A	MISCELLANEOUS DETAILS – ALTERNATE
A6.03	LOUVER SCHEDULE & DETAILS
A7.00	PLUMBING SCHEDULE AND BATHROOM INTERIOR ELEVATIONS
A7.01	LARGE SCALE BATHROOM FLOOR PLANS
8 – POOL PIPING	
SP1.0	SITE PLAN AND NOTES
SP2.0	ACTIVITY POOL PLAN
SP2.1	ACTIVITY POOL SECTION
SP2.2	ACTIVITY POOL DETAILS
SP2.4	ACTIVITY POOL PIPING SCHEMATIC
SP2.5	ACTVITY POOL SITE PIPING
SP3.0	WADING POOL PLAN AND SECTION
SP3.1	WADING POOL DETAILS
SP3.2	WADING POOL PIPING SCHEMATIC
SP3.3	WADING POOL SITE PIPING
SP4.0	SPRAY DECK PLAN
SP4.1	SPRAY DECK DETAILS
SP4.2	SPRAY DECK PIPING SCHEMATIC
SP4.3	SPRAY DECK SITE PIPING
SP5.0	FILTER BUILDING
SP5.1	MECHANICAL DETAILS
SP5.2	MECHANICAL DETAILS 2

CONSTRUCTION DOCUMENTS
12/11/15

Weston&Sampson®
273 Dividend Road, Rocky Hill, CT 06067
(860) 513-1473 (800) SAMPSON
www.westonandsampson.com

No.	Date	Dr.By	Ck.By	App.By	Description
1	1/27/16	LEC	JSP	JSP	ADDED DRAWING C4.01A

APPROVED

REGISTERED PROFESSIONAL ENGINEER _____ DATE _____

TOWN OF GREENWICH – DEPARTMENT OF PUBLIC WORKS
RITCH AVENUE WEST, GREENWICH, CONNECTICUT
BYRAM PARK POOL REPLACEMENT

SHEET INDEX

CADD NO. GREENWICH | SCALE: NONE | CONTRACT: – | JOB NO. 2130336 | DR.BY L.E.C. | DSN.BY L.E.C. | CHK.BY J.S.P. | APP.BY C.B.W.

ID1.00

FILE NO.

SHEET – OF –

LEGEND

DESCRIPTION	EXISTING	PROPOSED
SANITARY SEWER	S	8"S PVC
FORCE MAIN	FM	6"FM DI
WATER MAIN	W	6"W DI
TEMPORARY WATER		4"W
STORM DRAIN	D	18"D RCP
GAS	G	4"G
ELECTRIC	E	E
TELEPHONE	T	T
GRINDER PUMP		GP
SANITARY SEWER MANHOLE	S	
STORM DRAIN MANHOLE	D	
ELECTRICAL MANHOLE	E	EMH
TELEPHONE MANHOLE	E	TMH
AIR RELEASE VALVE MANHOLE	E	ARMH
FORCE MAIN CLEANOUT MANHOLE	E	FMCO
CLEANOUT		CO
CATCH BASIN		CB
CATCH BASIN (CURB INLET)		
HYDRANT		
TEMPORARY HYDRANT		H
GATE VALVE	WV	
CHECK VALVE		
CURB STOP		
BUTTERFLY VALVE		
BALL VALVE		
REDUCER		
CAP OR PLUG		
GAS GATE VALVE	GV	
UTILITY POLE		
LIGHT POST		
EDGE OF PAVEMENT		
EDGE OF UNPAVED ROAD		
CURB		
SIDEWALK		
PROPERTY LINE ALONG STONE WALL		
REMAINS OTHER STONE WALL		
RETAINING WALL		RET WALL
FENCE	x x	x x
INDIVIDUAL DECIDUOUS TREE		
INDIVIDUAL EVERGREEN TREE		
TREE LINE		
SURVEY MARKER		
LIMIT OF WORK		
SPOT ELEVATIONS	x 141.5	x141.5
CONTOUR LINES	56	56
DEPRESSION CONTOUR LINES		
HOUSE NUMBER	#35	
RIP RAP		
GUARD RAIL		
BOLLARD	B	B
SIGN		
TEST PIT		
BORING	B-10	
CHAIN LINK FENCE	X	
SILTATION FENCE		
HAY BALES		
ROCK OUTCROP		
SWALE AND FLOW DIRECTION		

NOTE: ITEMS SHOWN IN THE LEGEND MAY NOT BE PRESENT IN THESE PLANS

ABBREVIATIONS

AC	ASBESTOS CEMENT PIPE
ACCMP	ASPHALT COATED CORRUGATED METAL PIPE AIR
ARV	RELEASE VALVE
ASTM	AMERICAN SOCIETY FOR TESTING AND MATERIALS
BC	BITUMINOUS CONCRETE
BCLC	BITUMINOUS CONCRETE LIP CURB
BIT	BITUMINOUS
BLDG	BUILDING
BM	BENCH MARK
BMP	BEST MANAGEMENT PRACTICE
BO	BLOW OFF
BV	BUTTERFLY VALVE
CATV	CABLE TELEVISION
CB	CATCH BASIN
CC	CONCRETE CURB
CI	CAST IRON
℄	CENTERLINE
CL	CEMENT LINED
CMP	CORRUGATED METAL PIPE
CONC	CONCRETE
CU FT	CUBIC FEET
CY	CUBIC YARD
D	STORM DRAIN, DEPTH FROM RIM TO INVERT
DI	DROP INLET, DUCTILE IRON
DIA	DIAMETER
DMH	DRAIN MANHOLE
DWG	DRAWING
E	EAST, ELECTRIC
EA	EACH
EF	EACH FACE
EL	ELEVATION
EOP	EDGE OF PAVEMENT
EW	EACH WAY
EXIST	EXISTING
FF	FINISHED FLOOR
FL	FLOW LINE
FLG	FLANGE
FT	FEET, FOOT
G	NATURAL GAS
GALV	GALVANIZED
GC	GRANITE CURB
GR	GRANITE
HDPE	HIGH DENSITY POLYETHYLENE
HORIZ	HORIZONTAL
HP	HIGH PRESSURE
HYD	FIRE HYDRANT
INV	INVERT
ID	INSIDE DIAMETER
IP	IRON PIPE
LB	POUND
LF	LINEAR FEET
LS	LUMP SUM
MAX	MAXIMUM
MB	MAIL BOX
MECH	MECHANICAL
MH	MANHOLE
MIN	MINIMUM
MISC	MISCELLANEOUS
MJ	MECHANICAL JOINT
N	NORTH
N/A	NOT APPLICABLE
NE	NORTH EAST
NW	NORTH WEST
NF	NOT FOUND
N/F	NOW OR FORMERLY
NO OR #	NUMBER
N.T.S.	NOT TO SCALE
OD	OUTSIDE DIAMETER
PCB	PROPOSED CATCH BASIN
PCCP	PRESTRESSED CONCRETE CYLINDER PIPE
PDMH	PROPOSED DRAINAGE MANHOLE
PE	PLAIN END, POLYETHYLENE
PED	PEDESTRIAN
ℙ	PROPERTY LINE
PL	PLATE
PSMH	PROPOSED SANITARY MANHOLE
PVC	POLYVINYL CHLORIDE
PVMT	PAVEMENT
RCP	REINFORCED CONCRETE PIPE
RL	ROOF LEADER
ROW	RIGHT-OF-WAY
RQD	ROCK QUALITY
S	SEWER, SOUTH
SE	SOUTH EAST
SECT	SECTION
SF	SQUARE FEET
SHT	SHEET
SMH	SANITARY SEWER MANHOLE
SPEC	SPECIFICATIONS
SQ FT	SQUARE FEET
SS	SEWER SERVICE, STAINLESS STEEL
STA	STATION
STL	STEEL
SW	SIDEWALK,SOUTH WEST
T	HYDROSTATIC THRUST, TELEPHONE
TBM	TEMPORARY BENCH MARK
TF	TOP OF FRAME
THK	THICK (NESS)
TYP	TYPICAL
UP	UTILITY POLE
VC	VITRIFIED CLAY
VERT	VERTICAL
W	WATER, WEST
W/	WITH
W/O	WITHOUT

CONSTRUCTION DOCUMENTS
12/11/15

CONSTRUCTION NOTES:

1. THE CONTRACTOR SHALL CALL "CALL BEFORE YOU DIG" (CBYD) AT 1-800-922-4455 OR 811 AT LEAST 72 HOURS, SATURDAYS, SUNDAYS, AND HOLIDAYS EXCLUDED, PRIOR TO EXCAVATING AT ANY LOCATION. A COPY OF THE (CBYD) PROJECT REFERENCE NUMBER(S) SHALL BE GIVEN TO THE OWNER PRIOR TO EXCAVATION.
2. LOCATIONS OF EXISTING PIPES, CONDUITS, UTILITIES, FOUNDATIONS AND OTHER UNDERGROUND OBJECTS ARE NOT WARRANTED TO BE CORRECT AND THE CONTRACTOR SHALL HAVE NO CLAIM ON THAT ACCOUNT SHOULD THEY BE OTHER THAN SHOWN. CONTRACTOR SHALL DIG TEST PITS AS NEEDED TO LOCATE THESE ITEMS. DIGGING OF TEST PITS SHALL BE INCIDENTAL TO THE PROJECT.
3. TEST PITS TO LOCATE EXISTING UTILITIES MAY BE ORDERED BY THE ENGINEER AT NO ADDITIONAL COST TO THE OWNER.
4. STONE WALLS, FENCES, MAIL BOXES, SIGNS, CURBS, LIGHT POLES, ETC.. SHALL BE REMOVED AND REPLACED AS NECESSARY TO PERFORM THE WORK. UNLESS OTHERWISE INDICATED, ALL SUCH WORK SHALL BE INCIDENTAL TO CONSTRUCTION OF THE PROJECT.
5. ALL PAVEMENT DISTURBED BY THE CONTRACTOR'S OPERATIONS BEYOND THE LIMITS OF CONSTRUCTION SHALL BE RESTORED BY THE CONTRACTOR AT NO ADDITIONAL COST TO THE OWNER.
6. ALL AREAS DISTURBED BY THE CONTRACTOR BEYOND THE LIMITS OF CONSTRUCTION SHALL BE RESTORED AT NO ADDITIONAL COST TO THE OWNER.
7. CONCRETE CRADLES OR ARCHES SHALL BE CONSTRUCTED WHERE SHOWN ON THE DRAWINGS OR WHERE REQUIRED BY THE ENGINEER. UNLESS OTHERWISE INDICATED, CONCRETE USED FOR PIPE ANCHOR BLOCKS, BACKING, PIPE CRADLES, ARCHES, AND FILL SHALL HAVE A MINIMUM COMPRESSIVE STRENGTH OF 3000 PSI AT 28 DAYS.
8. CONCRETE THRUST BLOCKS, ANCHOR BLOCKS, OR APPROVED JOINT RESTRAINT METHODS SHALL BE PROVIDED FOR FORCE MAINS AND WATER MAINS WHERE ANY BENDS, TEES, PLUGS, OR WYES ARE INSTALLED. FOR THRUST BLOCK DETAILS AND MINIMUM BLOCK BEARING AREAS, SEE DETAILS.
9. THE CONTRACTOR SHALL NOT STORE ANY APPARATUS, MATERIALS, SUPPLIES, OR EQUIPMENT ON DRAINAGE STRUCTURES OR WITHIN 100 FEET OF WATERCOURSE.
10. SEWER TRENCHES MAY BE EXCAVATED WIDER THAN THE 'LIMIT OF EXCAVATION FOR EARTH EXCAVATION' ABOVE THE 'LINE OF NARROW TRENCH LIMIT.' ANY SUCH ADDITIONAL EXCAVATION SHALL BE AT THE CONTRACTORS EXPENSE AND SHALL NOT BE MEASURED FOR PAYMENT.
11. BELOW THE 'LINE OF NARROW TRENCH LIMIT' THE TRENCH SHOULD NOT BE EXCAVATED BEYOND THE TRENCH WIDTH 'W'. IF MATERIAL IS LOOSENED OR REMOVED BEYOND THE ABOVE MENTIONED LIMITS, THE CONTRACTOR WILL BE REQUIRED TO PROVIDE CRUSHED STONE FOR THE FULL WIDTH OF THE TRENCH AT NO ADDITIONAL COST TO THE OWNER.
12. FOUR FOOT INSIDE DIAMETER MANHOLES SHALL BE USED WITH SEWERS LESS THAN 24 INCHES IN DIAMETER, AND FIVE OR SIX FOOT INSIDE DIAMETER MANHOLES SHALL BE USED WITH SEWERS EQUAL TO OR GREATER THAN 24 INCHES IN DIAMETER, UNLESS OTHERWISE SPECIFIED.
13. OPENINGS FOR PIPE IN PRECAST MANHOLE BASES SHALL BE CAST IN THE REQUIRED LOCATIONS DURING MANHOLE MANUFACTURE. FIELD CUT OPENINGS WILL NOT BE PERMITTED UNLESS APPROVED BY THE ENGINEER.
14. FORM BRICK INVERTS IN MANHOLES WITH BRICK ON EDGE TO A DEPTH OF 0.8 INSIDE DIAMETER OF PIPE AND FORM A 1 INCH SLOPED BENCH WITH BRICK FLAT. INVERT SHALL BE SLOPED UNIFORMLY BETWEEN INLET AND OUTLET PIPE AND SHALL BE FORMED AND FILLED AS REQUIRED TO DIRECT THE FLOW AS INDICATED AND TO PREVENT DEPOSITION OF SOLIDS.
15. IN PAVED AREAS THE TOP OF THE MANHOLE COVER SHALL BE SET FLUSH WITH THE FINAL PAVED SURFACE.
16. PROTECTION OF WATER SUPPLIES – WHENEVER A SEWER MUST CROSS UNDER A WATER MAIN, THE SEWER SHALL BE LAID AT SUCH AN ELEVATION THAT THE TOP OF THE SEWER IS AT LEAST 18 INCHES BELOW THE BOTTOM OF THE WATER MAIN. WHEN THE ELEVATION OF THE SEWER CANNOT BE VARIED TO MEET THE ABOVE REQUIREMENT, THE WATER MAIN SHALL BE RELOCATED BY THE CONTRACTOR AS REQUIRED BY THE ENGINEER TO PROVIDE THIS SEPARATION OR THE CONTRACTOR SHALL CONSTRUCT THE NEW SEWER OF CLASS 150 PRESSURE PIPE FOR A DISTANCE OF 10 FEET ON EACH SIDE OF THE WATER MAIN. ONE FULL LENGTH OF CLASS 150 PRESSURE PIPE SEWER SHOULD BE CENTERED ON THE WATER MAIN AS MUCH AS POSSIBLE. THE SEWER CONSTRUCTED OF THE PRESSURE PIPE MUST BE PRESSURE TESTED TO ASSURE WATER TIGHTNESS.
17. PRIOR TO CONSTRUCTION THE CONTRACTOR SHALL REVIEW THE CONTRACT DOCUMENTS AND COORDINATE ALL EQUIPMENT BETWEEN THE DIFFERENT CONSTRUCTION DISCIPLINES FOR LOCATION, SIZE, SERVICEABILITY, SUPPORT SYSTEMS, CONNECTIONS (PIPING, ELECTRICAL, INSTRUMENTATION, ETC.), INCIDENTALS AND ANY AND ALL OTHER COMPONENTS REQUIRED FOR A COMPLETE AND FUNCTIONAL SYSTEM MEETING THE APPROVAL OF THE ENGINEER. IF ONE SYSTEM IS SHOWN ON ONE SET OF DISCIPLINE DRAWINGS/SPECIFICATIONS BUT THE SAME SYSTEM IS MISSING OR INCOMPLETE ON ANOTHER SET OF DISCIPLINE DRAWINGS/SPECIFICATIONS THE CONTRACTOR, AT NO ADDITIONAL COST TO THE OWNER, SHALL PROVIDE ALL NECESSARY EQUIPMENT, MATERIALS, LABOR, SUPPORT SYSTEMS, CONNECTIONS (PIPING, ELECTRICAL, INSTRUMENTATION, ETC.), COORDINATION, INCIDENTALS AND ANY AND ALL OTHER COMPONENTS REQUIRED FOR FURNISHING AND INSTALLING THE SYSTEM COMPLETE AS WELL AS PROVIDING A COMPLETE AND FUNCTIONAL SYSTEM MEETING THE APPROVAL OF THE ENGINEER.
18. CONTRACTOR SHALL VISIT AND EXAMINE THE SITE TO FULLY UNDERSTAND ALL THE CONDITIONS PERTAINING TO THE WORK, UNDERSTAND DIFFICULTIES TO BE ENCOUNTERED, UNDERSTAND THE SCOPE OF THE DEMOLITION WORK FOR ALL SYSTEMS WHETHER SHOWN OR DESCRIBED AT NO ADDITIONAL COST TO THE OWNER. THE EXACT LOCATION OF EXISTING PIPE, BUILDINGS, SERVICES, ETC. ARE TO BE FIELD VERIFIED.
19. CONTRACTOR TO VERIFY ALL DIMENSIONS, CLEARANCES, ELEVATIONS, AND SIZES OF EXISTING PIPES AND BUILDINGS.
20. ALL WORK UNDER THIS CONTRACT SHALL BE LIMITED TO THE "LIMIT OF WORK" BOUNDARY SHOWN ON THE DRAWING.
21. DEMOLITION DEBRIS MATERIAL SHALL IMMEDIATELY BECOME THE PROPERTY OF THE CONTRACTOR AND BE REMOVED FROM THE SITE AND DISPOSED OF IN ACCORDANCE WITH ALL LOCAL, STATE, AND FEDERAL REGULATIONS UNLESS OTHERWISE REQUIRED BY THE ENGINEER.
22. IF UNSUITABLE MATERIAL IS ENCOUNTERED IN STRUCTURAL AREAS OR AREAS OF PROPOSED PAVEMENT, THE CONTRACTOR SHALL IMMEDIATELY NOTIFY THE ENGINEER.
23. THE CONTRACTOR SHALL PROVIDE AND MAINTAIN EROSION AND SEDIMENT CONTROLS FOR THE DURATION OF THE PROJECT. EROSION AND SEDIMENT CONTROL MEASURES SHALL BE FURNISHED, INSTALLED, MAINTAINED, AND REPLACED BY THE CONTRACTOR AS NEEDED TO ENSURE THAT SEDIMENT-LADEN WATER DOES NOT LEAVE THE LIMIT OF WORK.
24. ALL WATER WORK SHALL BE PERFORMED IN ACCORDANCE WITH THE RULES AND REGULATIONS, AND STANDARDS OF AQUARION WATER COMPANY.
25. ALL UTILITY WORK SHALL BE PERFORMED IN ACCORDANCE WITH THE RULES AND REGULATIONS AND STANDARDS OF THE APPLICABLE LOCAL UTILITY COMPANY.
26. CONTRACTOR IS RESPONSIBLE FOR OBTAINING ALL REQUIRED LOCAL, STATE, AND UTILITY PERMITTING.
27. ALL CONSTRUCTION SHALL BE DONE IN ACCORDANCE WITH THE APPLICABLE STANDARDS AND SPECIFICATIONS OF THE TOWN OF GREENWICH AS WELL AS THE TOWN STANDARD CONSTRUCTION NOTES LISTED ON G1.01.
28. REFER TO THE TOWN OF GREENWICH PHASING SPECIFICATION WHICH PROVIDES INFORMATION ON PHASING OF WORK AND THE ASSOCIATED SCHEDULING. THIS SPECIFICATION ALSO PROVIDES INFORMATION ON WHICH PORTIONS OF THE PARK ARE TO REMAIN OPEN DURING CONSTRUCTION AND WHICH UTILITIES ARE TO REMAIN IN SERVICE DURING SPECIFIC PHASES.
29. REFER TO G1.01 FOR TOWN OF GREENWICH STANDARD CONSTRUCTION NOTES.

GENERAL NOTE:

1. THE PROPOSED POOL AREA SHALL HAVE A MAXIMUM 310 BATHER CAPACITY. THE POOL AREA AND BEACH SHALL HAVE A COMBINED CAPACITY OF 500 PERSONS. THE TOWN OF GREENWICH, PARKS AND RECREATION DEPARTMENT, SHALL CONTROL THE NUMBER OF BATHERS AT ANY ONE TIME TO NO EXCEED 310 BATHERS THROUGH THE USE OF CHECKERS AT THE GATES TO THE POOL AREA.

TOWN OF GREENWICH STANDARD DETAILS

(REFER TO DETAIL DRAWINGS D1.04 THROUGH D1.06)

DETAIL	TITLE
SCD NO. 921.14	PEDESTRIAN RAMP TYPE 1
SCD NO. 507.14	DOUBLE TYPE C-1 CONCRETE BLOCK CATCH BASIN
SCD NO. 507.10	TYPE C-1 PRECAST CATCH BASIN
SCD NO. 507.20	TYPE C-1 PRECAST CATCH BASIN (NO CURB)
SCD NO. 507.40	TYPE C-4 PRECAST CATCH BASIN
SCD NO. 507.60	TYPE P-2 PRECAST MANHOLE
SCD NO. 406.12	BITUMINOUS CONCRETE (HMA) PAVEMENT RECONSTRUCTION

Weston&Sampson®
273 Dividend Road, Rocky Hill, CT 06067
(860) 513-1473 (800) SAMPSON
www.westonandsampson.com

No.	Date	Dr.By	Ck.By	App.By	Description
A	12-15-15	P	P	R	O V E D

REGISTERED PROFESSIONAL ENGINEER — DATE

TOWN OF GREENWICH – DEPARTMENT OF PUBLIC WORKS
RITCH AVENUE WEST, GREENWICH, CONNECTICUT
BYRAM PARK POOL REPLACEMENT

ABBREVIATIONS, NOTES, AND LEGEND

CADD NO.	SCALE:	CONTRACT:	JOB NO.	DR.BY	DSN.BY	CHK.BY	APP.BY
GREENWICH	NONE	–	2130336	L.E.C.	L.E.C.	J.S.P.	C.B.W.

FILE NO.

G1.00

SHEET – OF –

TOWN STANDARD CONSTRUCTION NOTES:

(ALL APPLICABLE CONDITIONS BELOW SHALL BE MET)

SITE AND SUBDIVISION PLANS

1. A HIGHWAY PERMIT IS REQUIRED FOR ALL WORK WITHIN THE TOWN OF GREENWICH – RIGHT OF WAY.

2. ALL WORK WITHIN THE TOWN OF GREENWICH – RIGHT OF WAY SHALL BE CONSTRUCTED TO TOWN OF GREENWICH STANDARDS.

3. CATCH BASINS FOR PRIVATE DRIVEWAYS SHALL HAVE A MINIMUM GRATE OF TWO FEET BY TWO FEET. IF THE DRIVEWAY IS CURBED THE CATCH BASIN SHALL HAVE A MINIMUM CURB INLET OF SIX INCHES. EACH DRIVEWAY CATCH BASIN SHALL ALSO HAVE A MINIMUM TWO –FOOT SUMP AND BELL TRAP

4. ALL DRAINAGE CONNECTIONS TO THE TOWN DRAINAGE SYSTEM SHALL BE GRAVITY LINES. IF A DISCHARGE FROM A SUMP PUMP IS CONNECTED TO THE TOWN DRAINAGE SYSTEM IT MUST DISCHARGE TO A DRAINAGE STRUCTURE ON PRIVATE PROPERTY AND THEN BE CONNECTED TO THE TOWN DRAINAGE SYSTEM. ALL SUMP PUMPS REQUIRE A BACKFLOW PREVENTER (CHECK VALVE) BETWEEN THE PUMP AND THE DRAINAGE STRUCTURE. A DRAIN CONNECTION PERMIT FROM THE HIGHWAY DIVISION IS REQUIRED FOR ALL CONNECTIONS TO THE TOWN DRAINAGE SYSTEM.

5. IN ROADWAY CUTS, SUBDRAINS SHALL BE REQUIRED IF SEEPAGE OCCURS DURING CONSTRUCTION OR WITHIN ONE YEAR AFTER ROAD CONSTRUCTION IS COMPLETED AND ACCEPTED, EVEN THOUGH PLANS MAY HAVE BEEN APPROVED WITHOUT SUBDRAINS AND/OR ROADWAY CONSTRUCTION HAS BEEN COMPLETED.

6. ALL RETAINING WALLS GREATER THAN THREE FEET ARE REQUIRED TO BE DESIGNED, AND INSPECTED DURING CONSTRUCTION BY A PROFESSIONAL ENGINEER REGISTERED IN THE STATE OF CONNECTICUT. A RETAINING WALL CERTIFICATION SIGN–OFF AND RETAINING WALL FIELD INSPECTION RECORD FORM SHALL BE SUBMITTED PRIOR TO THE ISSUANCE OF A CERTIFICATE OF OCCUPANCY.

7. ALL DETENTION/RETENTION SYSTEMS SHALL BE INSTALLED PER MANUFACTURER'S SPECIFICATIONS. ALL SYSTEMS SHALL USE A MANIFOLD SYSTEM TO DISTRIBUTE RUNOFF EVENLY INTO EACH ROW OF INFILTRATORS. DETENTION SYSTEMS WILL HAVE A MANIFOLD SYSTEM THAT CREATES THE LONGEST TRAVEL TIME TO THE CONTROL STRUCTURE.

8. ALL INFILTRATION SYSTEMS MUST MEET THE STORMWATER INFILTRATION/RECHARGE DESIGN REQUIREMENTS IN APPENDIX B OF THE TOWN OF GREENWICH DRAINAGE MANUAL. THERE MUST BE AT LEAST A 2–FOOT SEPARATION DISTANCE FROM THE BOTTOM OF THE INFILTRATION STRUCTURE TO THE SEASONAL HIGH GROUNDWATER OR BEDROCK/LEDGE (THIS SEPARATION REQUIREMENT MAY BE WAIVED OR REDUCED BY THE APPROVING AUTHORITY ON A CASE–BY–CASE BASIS). A 3–FOOT SEPARATION DISTANCE IS REQUIRED FROM THE BOTTOM OF THE INFILTRATION STRUCTURE TO SEASONAL HIGH GROUNDWATER FOR LAND USES WITH HIGHER POTENTIAL POLLUTANT LOADS (HIGH LOAD AREAS). PRIOR TO THE INSTALLATION OF THE INFILTRATORS THE ENGINEER SHALL VERIFY THE INFILTRATION STRUCTURE IS BEING INSTALLED IN THE APPROVED LOCATION AND IF THE LOCATION HAS BEEN CHANGED ADDITIONAL SOIL TESTING SHALL BE PERFORMED AND THE ENGINEER SHALL APPROVE THE REVISED LOCATION. A REVIEW BY THE APPROVING AUTHORITY WILL BE REQUIRED.

9. TO OBTAIN A CERTIFICATE OF OCCUPANCY A SITE DEVELOPMENT REVIEW REQUEST MUST BE SUBMITTED AND THE SUBMITTAL MUST INCLUDE ALL ITEMS IN ITEM 6 ON THE SITE DEVELOPMENT REVIEW REQUEST FORM.

SUBDIVISION RECORD PLAN

ALL PLANS THAT SHOW A DRAINAGE COURSE SHALL INCLUDE THE FOLLOWING NOTE:

AS A PROTECTION TO THE TOWN OF GREENWICH, OWNER SHALL INCLUDE CLAUSE IN ALL DEEDS OF SALE TO THE EFFECT THAT RIGHTS–OF–WAY FOR DRAINAGE WILL BE RESERVED. UPON APPROVAL OF THIS SUBDIVISION PLAN, THE OWNER OR OWNERS AGREE WITH THE TOWN OF GREENWICH, THAT UNLESS OTHERWISE SPECIFIED HEREON, THE AFFECTED AREAS OF ANY DRAINAGE EASEMENT OR THE AREAS WITHIN AT LEAST TEN (10) FEET OF THE CENTERLINE (20 FEET TOTAL) OF ANY DRAINAGE SWALE, DITCH OR STREAM SHOWN HEREON ARE DEDICATED FOR DRAINAGE; THAT NO BUILDING OR OTHER STRUCTURE SHALL BE LOCATED THEREON AND THAT THE TOWN SHALL BE UNDER NO OBLIGATION TO ENCLOSE SUCH DRAINAGE. HOWEVER, ANY DRAINAGE LINE, DITCH OR STREAM, WHETHER OR NOT SHOWN HEREON, AND NOT WITHIN ESTABLISHED EASEMENT SHOWN HEREON, MAY BE RELOCATED BY OWNER, WITH THE APPROVAL OF THE INLAND WETLANDS & WATERCOURSES AGENCY, WHERE REQUIRED.

THE GRANTEE OF ALL PARCELS HAVING A WATERCOURSE AGREES TO MAINTAIN THE WATERCOURSE SO AS TO PERMIT THE FREE FLOWING OF WATER THEREIN. SHOULD ANY SUCH GRANTEE FAIL TO MAINTAIN THE OBLIGATION HEREIN IMPOSED, THE TOWN OF GREENWICH SHALL HAVE THE PRIVILEGE OF ENTERING UPON SAID PROPERTY AND DOING THE REQUIRED WORK, AND THE COST THEREOF SHALL BE PAID BY THE OWNER OF THE LAND IN DEFAULT.

ALL PLANS THAT SHOW AN AREA RESERVED FOR FLOOD CONTROL SHALL INCLUDE THE FOLLOWING NOTE OR APPROPRIATE MODIFICATION THEREOF:

THE COMMISSIONER RESERVES THE RIGHT TO ENTER THE PROPERTY AND ALTER THE DISCHARGE STRUCTURE IN THE FUTURE, IF DEEMED NECESSARY, TO IMPROVE THE FLOOD CONTROL CHARACTERISTICS OF THE DETENTION AREA. THE INTEGRITY OF THE DETENTION AREA, DISCHARGE HEADWALL AND OTHER RELATED DRAINAGE FACILITIES MUST BE MAINTAINED BY THE ASSOCIATION OF PROPERTY OWNERS WITHIN THE SUBDIVISION. SHOULD ANY SUCH ASSOCIATION FAIL TO MAINTAIN THE OBLIGATION HEREIN IMPOSED, THE TOWN OF GREENWICH SHALL HAVE THE PRIVILEGE TO ENTER UPON SAID PROPERTY AND PERFORM THE REQUIRED WORK AND THE COST THEREOF SHALL BE PAID BY THE ASSOCIATION IN DEFAULT.

CONSTRUCTION DOCUMENTS
12/11/15

Weston&Sampson®
273 Dividend Road, Rocky Hill, CT 06067
(860) 513-1473 (800) SAMPSON
www.westonandsampson.com

No.	Date	Dr.By	Ck.By	App.By	Description
A	P	P	R	O	V E D

REGISTERED PROFESSIONAL ENGINEER — DATE 12-15-15

TOWN OF GREENWICH – DEPARTMENT OF PUBLIC WORKS
RITCH AVENUE WEST, GREENWICH, CONNECTICUT
BYRAM PARK POOL REPLACEMENT

ADDITIONAL NOTES

CADD NO.	SCALE:	CONTRACT:	JOB NO.	DR.BY	DSN.BY	CHK.BY	APP.BY
GREENWICH	NONE	–	2130336	L.E.C.	L.E.C.	J.S.P.	C.B.W.

G1.01

FILE NO.

SHEET – OF –

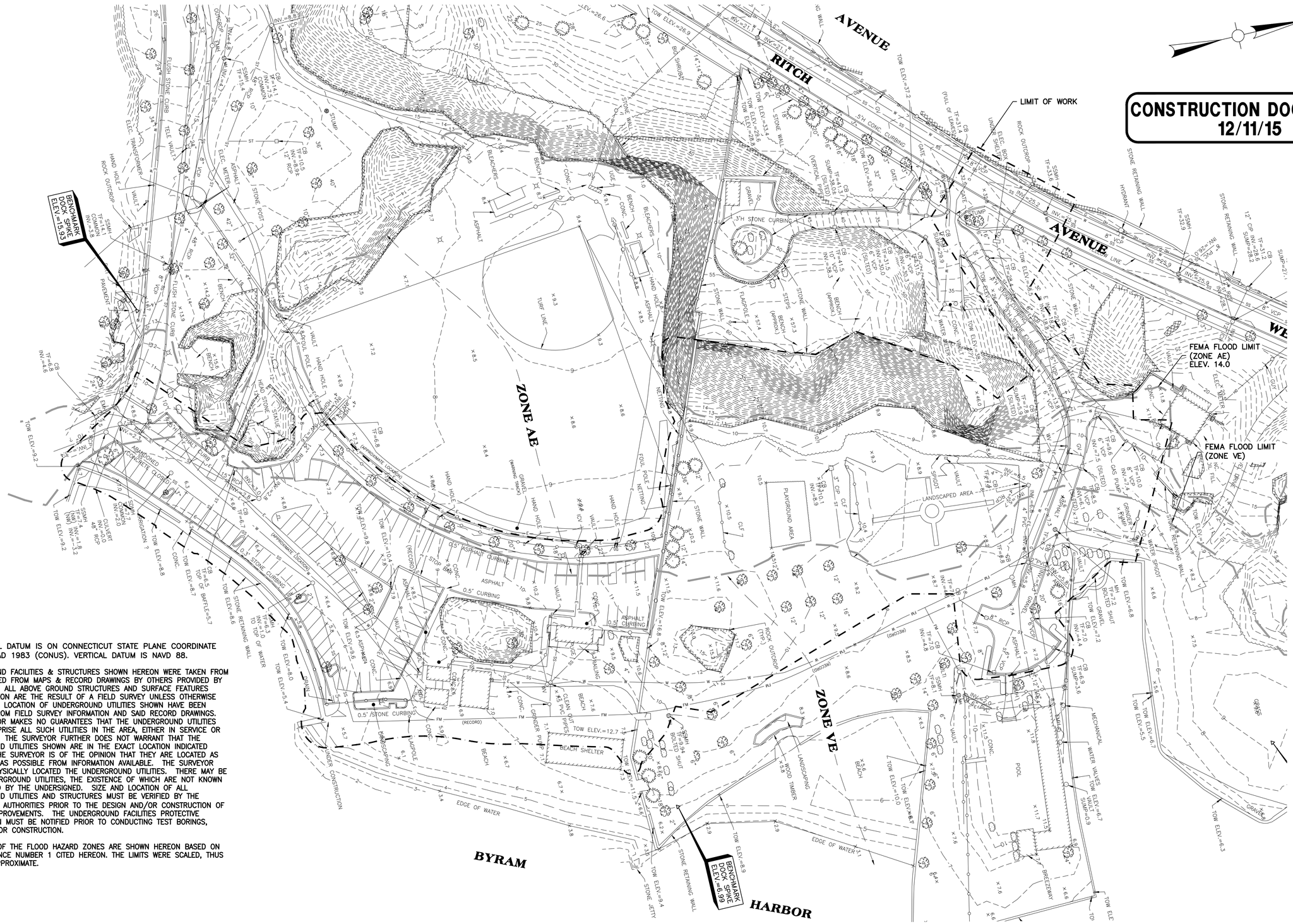

NOTES:

1. HORIZONTAL DATUM IS ON CONNECTICUT STATE PLANE COORDINATE SYSTEM, NAD 1983 (CONUS). VERTICAL DATUM IS NAVD 88.

2. UNDERGROUND FACILITIES & STRUCTURES SHOWN HEREON WERE TAKEN FROM DATA OBTAINED FROM MAPS & RECORD DRAWINGS BY OTHERS PROVIDED BY THE CLIENT. ALL ABOVE GROUND STRUCTURES AND SURFACE FEATURES SHOWN HEREON ARE THE RESULT OF A FIELD SURVEY UNLESS OTHERWISE NOTED. THE LOCATION OF UNDERGROUND UTILITIES SHOWN HAVE BEEN COMPILED FROM FIELD SURVEY INFORMATION AND SAID RECORD DRAWINGS. THE SURVEYOR MAKES NO GUARANTEES THAT THE UNDERGROUND UTILITIES SHOWN COMPRISE ALL SUCH UTILITIES IN THE AREA, EITHER IN SERVICE OR ABANDONED. THE SURVEYOR FURTHER DOES NOT WARRANT THAT THE UNDERGROUND UTILITIES SHOWN ARE IN THE EXACT LOCATION INDICATED ALTHOUGH THE SURVEYOR IS OF THE OPINION THAT THEY ARE LOCATED AS ACCURATELY AS POSSIBLE FROM INFORMATION AVAILABLE. THE SURVEYOR HAS NOT PHYSICALLY LOCATED THE UNDERGROUND UTILITIES. THERE MAY BE OTHER UNDERGROUND UTILITIES, THE EXISTENCE OF WHICH ARE NOT KNOWN OR CERTIFIED BY THE UNDERSIGNED. SIZE AND LOCATION OF ALL UNDERGROUND UTILITIES AND STRUCTURES MUST BE VERIFIED BY THE APPROPRIATE AUTHORITIES PRIOR TO THE DESIGN AND/OR CONSTRUCTION OF ADJACENT IMPROVEMENTS. THE UNDERGROUND FACILITIES PROTECTIVE ORGANIZATION MUST BE NOTIFIED PRIOR TO CONDUCTING TEST BORINGS, EXCAVATION OR CONSTRUCTION.

3. THE LIMITS OF THE FLOOD HAZARD ZONES ARE SHOWN HEREON BASED ON MAP REFERENCE NUMBER 1 CITED HEREON. THE LIMITS WERE SCALED, THUS THEY ARE APPROXIMATE.

PLAN
SCALE: 1"=40'
0 40' 80' 120'

Weston&Sampson®
273 Dividend Road, Rocky Hill, CT 06067
(860) 513-1473 (800) SAMPSON
www.westonandsampson.com

No.	Date	Dr.By	Ck.By	App.By	Description
		A	P	P	R O V E D

12-15-15
DATE

REGISTERED PROFESSIONAL ENGINEER

TOWN OF GREENWICH – DEPARTMENT OF PUBLIC WORKS
RITCH AVENUE WEST, GREENWICH, CONNECTICUT
BYRAM PARK POOL REPLACEMENT

EXISTING CONDITIONS PLAN

CADD NO.	SCALE:	CONTRACT:	JOB NO.	DR.BY	DSN.BY	CHK.BY	APP.BY
GREENWICH	1"=40'	–	2130336	L.E.C.	L.E.C.	J.S.P.	C.B.W.

C1.00

FILE NO.

SHEET – OF –

NOTES:

1. REFER TO UTILITY PLANS FOR ABANDONMENT OF EXISTING UTILITIES.
2. ALL EXISTING UTILITIES ASSOCIATED WITH BUILDING REMOVAL SHALL BE CAPPED AND ABANDONED IN ACCORDANCE WITH THE STANDARDS OF THE APPLICABLE UTILITY PROVIDER.
3. REFER TO EROSION AND SEDIMENTATION CONTROL PLAN FOR SPECIFIC INFORMATION ON TREE REMOVAL AND PROTECTION.
4. ROCK REMOVAL SHALL BE PERFORMED AT A 1V(MAX.):1H SLOPE. A PROFESSIONAL GEOLOGIST SHALL INSPECT THE ROCK SLOPE TO ASSESS OVERALL STABILITY OF THE SLOPE AND TO MAP JOINT PATTERNS AND LOOSE AND WEATHERED ZONES. BASED ON THE ROCK SLOPE ASSESSMENT, REMOVAL OF LOOSE AND WEATHERED ZONES AND STABILIZATION OF THE SLOPE FACE MAY BE REQUIRED. A STEEPER ROCK SLOPE MAY BE ALLOWED AT THE RECOMMENDATION OF THE GEOLOGIST. THE GEOLOGIST WORK SHALL BE PERFORMED AT THE CONTRACTOR'S EXPENSE.
5. REFER TO THE TOWN OF GREENWICH SPECIFICATION AND RELATED REPORTING WITH REGARDS TO PRIOR HAZARDOUS MATERIALS TESTING (INCLUDING ASBESTOS, PCBS, LEAD ETC.) AND LEAD MATERIALS TESTING PERFORMED ON THE EXISTING BUILDINGS TO BE DEMOLISHED. THE CONTRACTOR SHALL BE RESPONSIBLE FOR REVIEWING THIS INFORMATION AND COORDINATING DIRECTLY WITH THE TOWN ON ANY ADDITIONAL REQUIREMENTS AS A RESULT OF THE TESTING PERFORMED OR ANY MATERIALS PRESENT REQUIRING SPECIAL HANDLING OR DISPOSAL.

   CONTRACTOR SHALL PROVIDE ADDITIONAL TEMPORARY FENCING AS REQUIRED FOR PHASING AT NO ADDITIONAL COST TO THE OWNER.
6. EXISTING STONE CURB TO BE REMOVED SHALL BE SET ASIDE FOR REUSE. SEE C3.01 FOR LOCATIONS FOR "RESET STONE CURB."

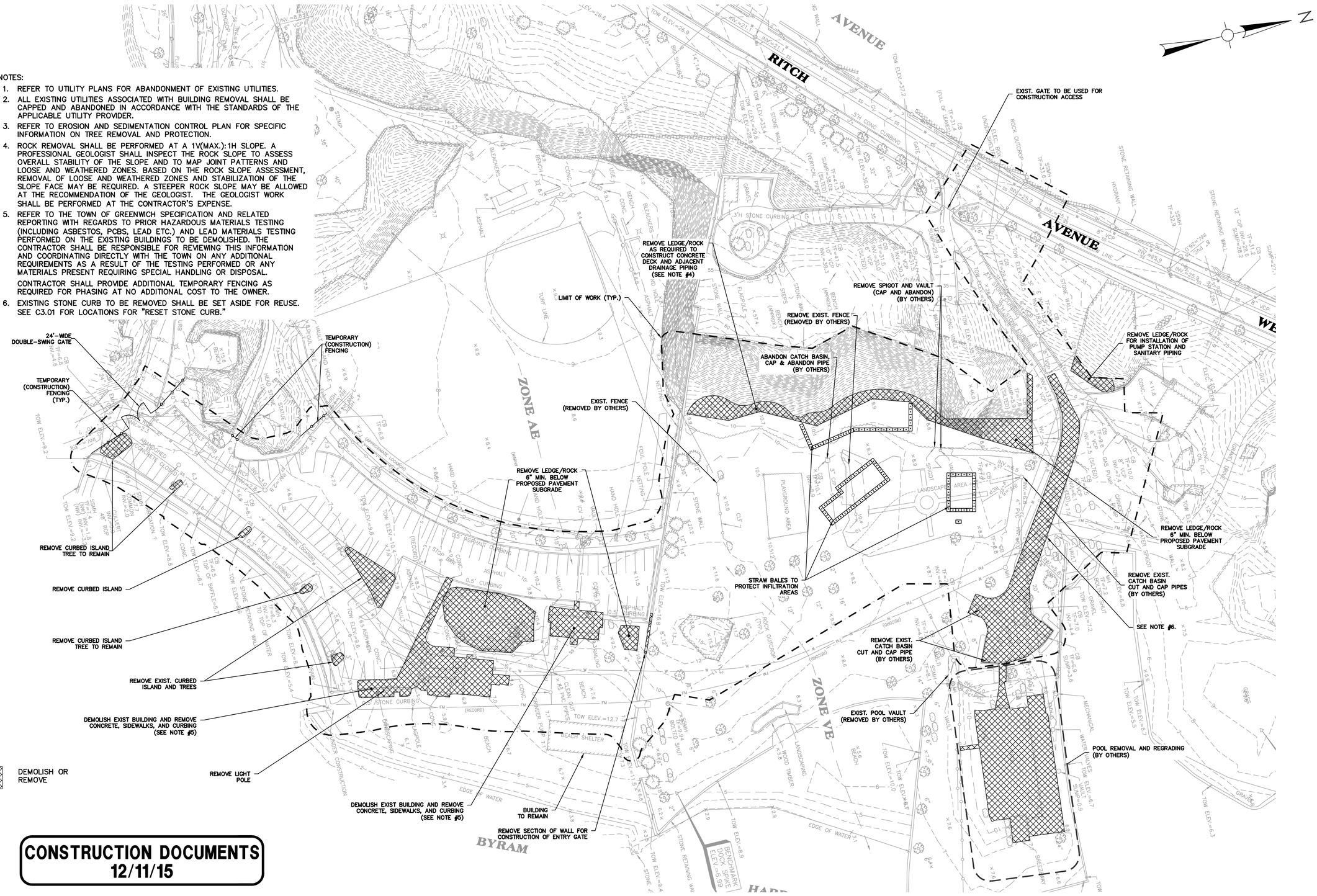

LEGEND

DEMOLISH OR REMOVE

CONSTRUCTION DOCUMENTS
12/11/15

PLAN
SCALE: 1"=40'
0 40' 80' 120'

Weston&Sampson®
273 Dividend Road, Rocky Hill, CT 06067
(860) 513-1473 (800) SAMPSON
www.westonandsampson.com

No.	Date	Dr.By	Ck.By	App.By	Description

A P P R O V E D

REGISTERED PROFESSIONAL ENGINEER — DATE 12-15-15

STATE OF CONNECTICUT ★ CHRISTOPHER B. WESTER ★ No. 17706 ★ LICENSED PROFESSIONAL ENGINEER

TOWN OF GREENWICH – DEPARTMENT OF PUBLIC WORKS
RITCH AVENUE WEST, GREENWICH, CONNECTICUT
BYRAM PARK POOL REPLACEMENT

DEMOLITION PLAN

CADD NO.	SCALE:	CONTRACT:	JOB NO.	DR.BY	DSN.BY	CHK.BY	APP.BY
GREENWICH	1"=40'	–	2130336	L.E.C.	L.E.C.	J.S.P.	C.B.W.

C1.01

FILE NO.

SHEET – OF –

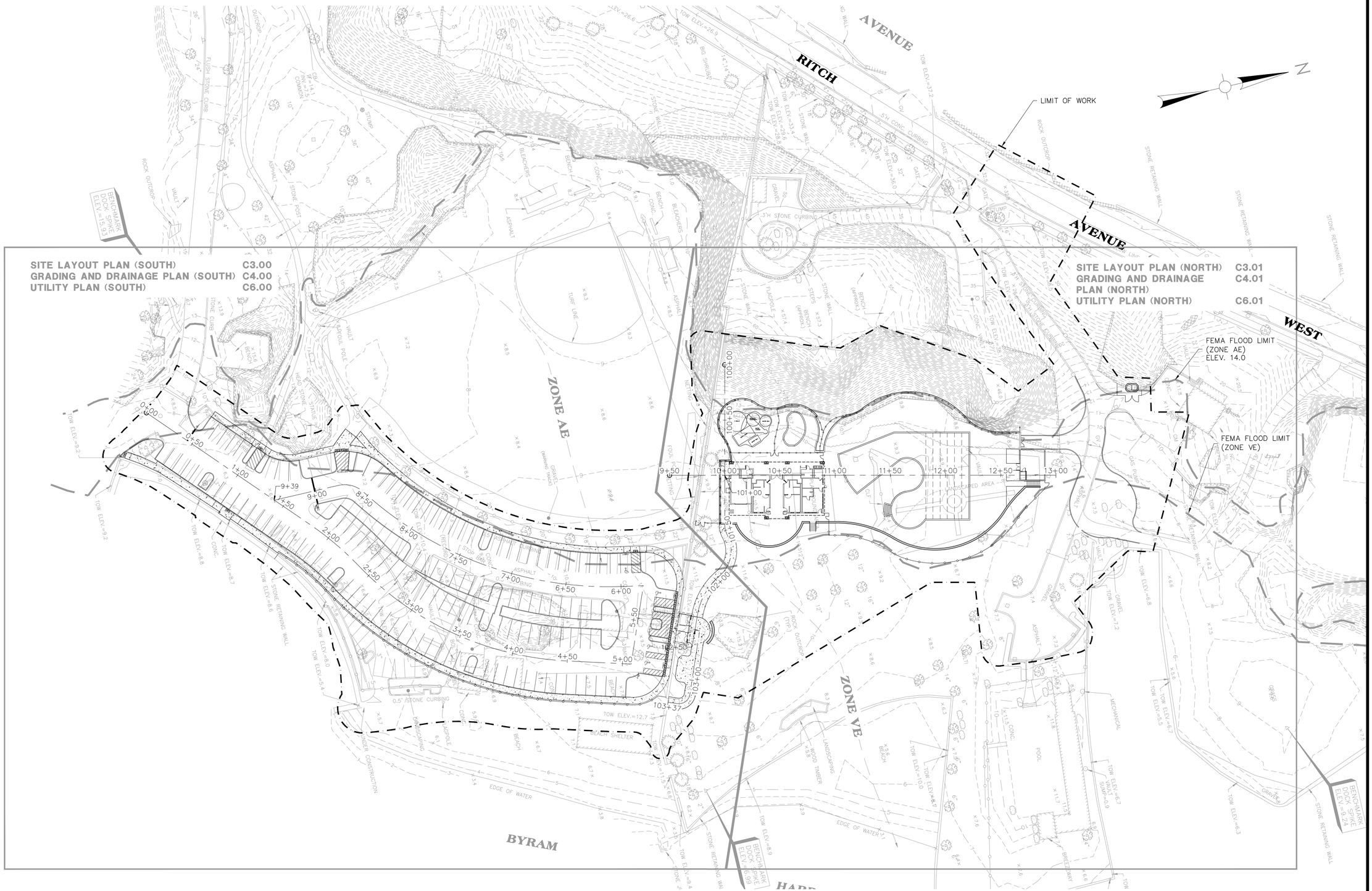

CONSTRUCTION DOCUMENTS
12/11/15

PLAN
SCALE: 1"=40'
0 40' 80' 120'

Weston&Sampson®
273 Dividend Road, Rocky Hill, CT 06067
(860) 513-1473 (800) SAMPSON
www.westonandsampson.com

No.	Date	Dr.By	Ck.By	App.By	Description

A P P R O V E D
12-15-15
DATE
REGISTERED PROFESSIONAL ENGINEER

TOWN OF GREENWICH – DEPARTMENT OF PUBLIC WORKS
RITCH AVENUE WEST, GREENWICH, CONNECTICUT
BYRAM PARK POOL REPLACEMENT
OVERALL SITE PLAN

CADD NO.	SCALE:	CONTRACT:	JOB NO.	DR.BY	DSN.BY	CHK.BY	APP.BY
GREENWICH	1"=40'	–	21303.36	L.E.C.	L.E.C.	J.S.P.	C.B.W.

C2.00
FILE NO.
SHEET – OF –

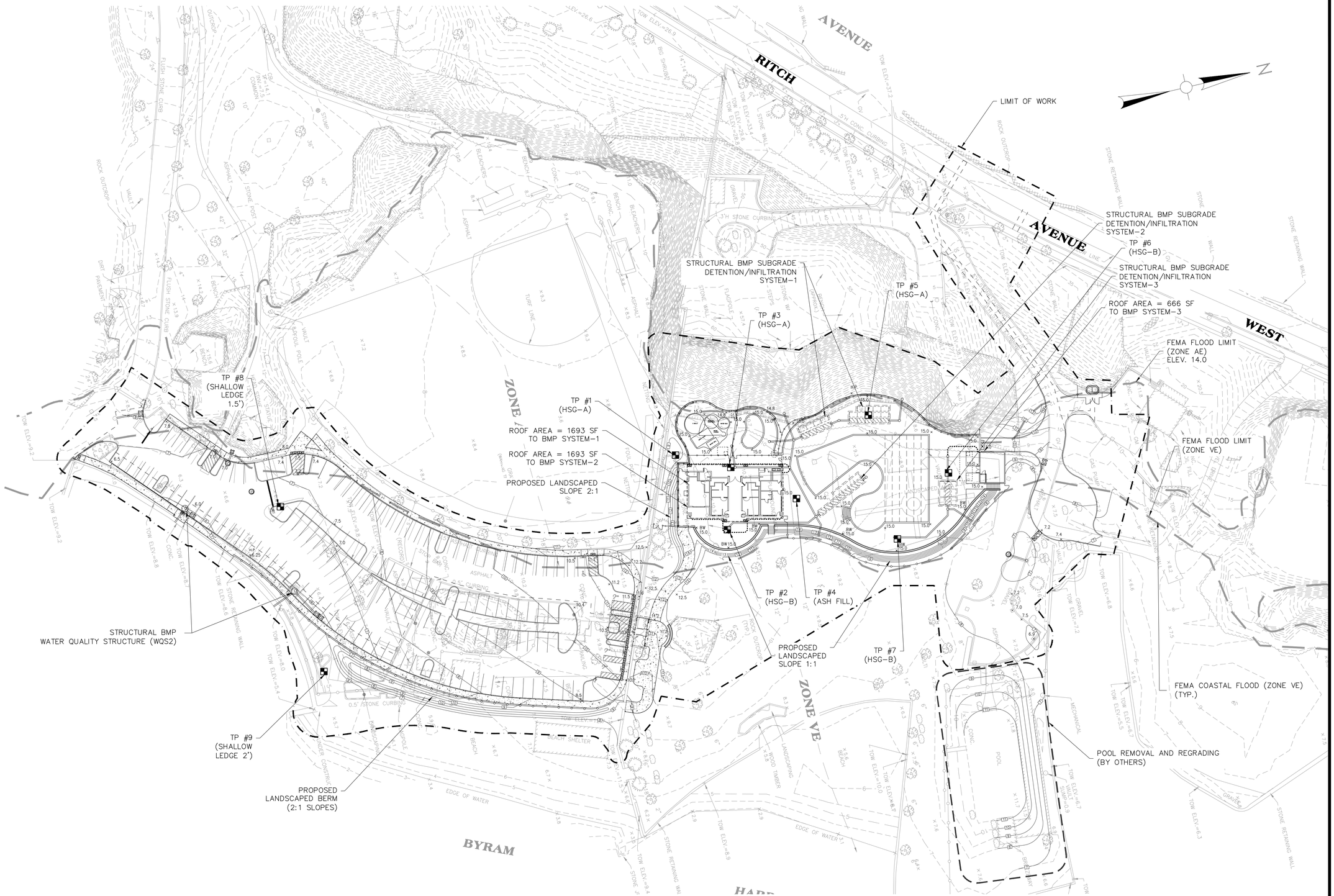

PLAN
SCALE: 1"=40'
0 40' 80' 120'

CONSTRUCTION DOCUMENTS
12/11/15

Weston&Sampson®
273 Dividend Road, Rocky Hill, CT 06067
(860) 513-1473 (800) SAMPSON
www.westonandsampson.com

No.	Date	Dr.By	Ck.By	App.By	Description

APPROVED
12-15-15
DATE
REGISTERED PROFESSIONAL ENGINEER

TOWN OF GREENWICH – DEPARTMENT OF PUBLIC WORKS
RITCH AVENUE WEST, GREENWICH, CONNECTICUT
BYRAM PARK POOL REPLACEMENT

LOW IMPACT DEVELOPMENT PLAN

CADD NO.	SCALE:	CONTRACT:	JOB NO.	DR.BY	DSN.BY	CHK.BY	APP.BY
GREENWICH	1"=40'	–	2130336	L.E.C.	L.E.C.	J.S.P.	C.B.W.

C2.01
FILE NO.
SHEET – OF –

CONCRETE CURB (TYP.)

SAWCUT BITUMINOUS CONCRETE PAVEMENT (MATCH EXISTING)

CONCRETE CURB (TYP.)

SINGLE DIRECTION SIDEWALK RAMP W/ DETECTABLE WARNING STRIP (CONNDOT TYPE 4a)

STOP SIGN W/ 12"–WIDE STOP BAR

PEDESTRIAN RAMP TYPE 1 (TYP.)

STOP SIGN W/ 12"–WIDE STOP BAR

6'–WIDE CONCRETE SIDEWALK AND MONOLITHIC CURB (TYP.)

PARKING LOT BASELINE (TYP.) (SEE NOTE #1)

ONE–WAY TRAFFIC (TYP.)

STANDARD PARKING SPACE (9'x18') (TYP.)

LANDSCAPED ISLAND WITH CONCRETE CURB (TYP.)

REFER TO C3.04 FOR BASELINE GEOMETRY

PARKING LOT BASELINE (TYP.)

(1) VAN–ACCESSIBLE PARKING SPACE W/ ACCESSIBLE SIGN

(1) VAN ACCESSIBLE PARKING SPACE W/ ACCESSIBLE SIGN

ENTRANCE WALL (SEE CS2.02)

10'–WIDE CONCRETE SIDEWALK

ENTRY GATE

MATCHLINE C3.01

TWO–WAY TRAFFIC

PEDESTRIAN RAMP TYPE 1 (TYP.)

ONE–WAY TRAFFIC (TYP.)

4" WHITE PAINTED PAVEMENT MARKING (TYP.)

SAWCUT (TYP.) (REFER TO LAYOUT PLAN FOR

6'–WIDE CONCRETE SIDEWALK AND DOUBLE MONOLITHIC CURB IN THIS LOCATION

5'–HIGH CHAIN LINK FENCE (BLACK–VINYL COATED)

(2) STANDARD ACCESSIBLE PARKING SPACES W/ ACCESSIBLE SIGN

FOOT WASH AREA

10'–WIDE SIDEWALK

(APPROXIMATE LOCATION)

ASPHALT CURBING

0.5' STONE CURBING

EDGE OF WATER

LEGEND

FULL–DEPTH PAVEMENT CONSTRUCTION

2 ½" MILL AND OVERLAY

SITE LAYOUT NOTES

1. REFER TO DRAWING C3.03 FOR PARKING LOT BASELINE GEOMETRY AND CURB RADII GEOMTERY.

PROPOSED PARKING:

STANDARD SPACES	133
STANDARD ACCESSIBLE SPACES	2
VAN–ACCESSIBLE	2
TOTAL	137

SIGN LEGEND

1 STOP — 24" – 31–0536

2 DO NOT ENTER — 31–1109 (30"x30")

3 ONE WAY — 31–1188 (36"x12")

NOTE: SEE DETAIL SHEET FOR ACCESSIBLE SIGN DETAIL

PLAN
SCALE: 1"=20'
0 20' 40' 60'

CONSTRUCTION DOCUMENTS
12/11/15

Weston&Sampson®
273 Dividend Road, Rocky Hill, CT 06067
(860) 513-1473 (800) SAMPSON
www.westonandsampson.com

No.	Date	Dr.By	Ck.By	App.By	Description
					APPROVED

12-15-15
DATE

REGISTERED PROFESSIONAL ENGINEER

STATE OF CONNECTICUT ★ CHRISTOPHER B. WESTER ★ No. 17706 ★ LICENSED PROFESSIONAL ENGINEER

TOWN OF GREENWICH – DEPARTMENT OF PUBLIC WORKS
RITCH AVENUE WEST, GREENWICH, CONNECTICUT
BYRAM PARK POOL REPLACEMENT

SITE LAYOUT PLAN–SOUTH

CADD NO.	SCALE:	CONTRACT:	JOB NO.	DR.BY	DSN.BY	CHK.BY	APP.BY
GREENWICH	1"=20'	–	2130336	L.E.C.	L.E.C.	J.S.P.	C.B.W.

C3.00

FILE NO.

SHEET – OF –

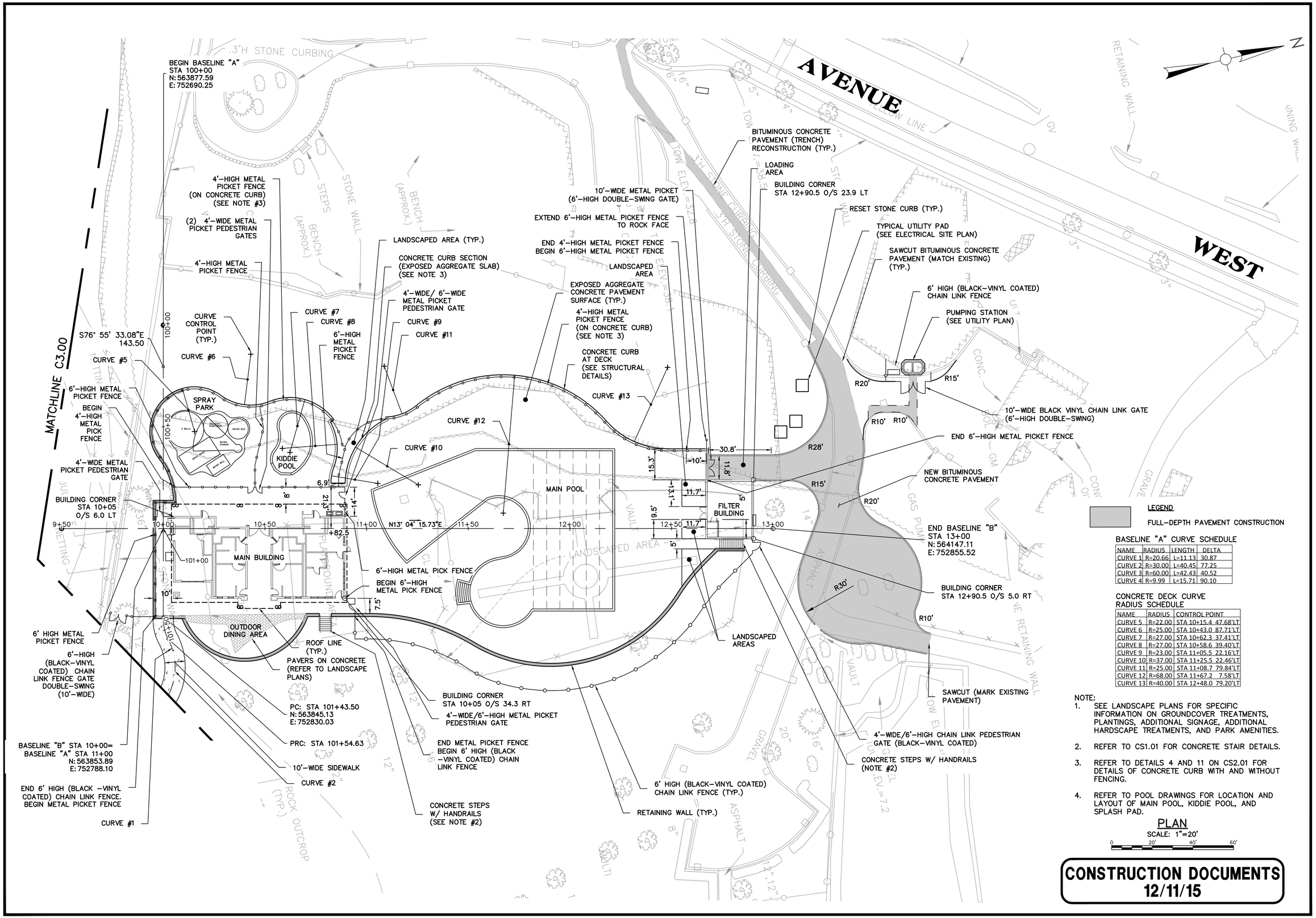

LEGEND

FULL-DEPTH PAVEMENT CONSTRUCTION

BASELINE "A" CURVE SCHEDULE

NAME	RADIUS	LENGTH	DELTA
CURVE 1	R=20.66	L=11.13	30.87
CURVE 2	R=30.00	L=40.45	77.25
CURVE 3	R=60.00	L=42.43	40.52
CURVE 4	R=9.99	L=15.71	90.10

CONCRETE DECK CURVE RADIUS SCHEDULE

NAME	RADIUS	CONTROL POINT
CURVE 5	R=22.00	STA 10+15.4 47.68'LT
CURVE 6	R=25.00	STA 10+43.0 87.71'LT
CURVE 7	R=27.00	STA 10+62.3 37.41'LT
CURVE 8	R=27.00	STA 10+58.6 39.40'LT
CURVE 9	R=23.00	STA 11+05.5 22.16'LT
CURVE 10	R=37.00	STA 11+25.5 22.46'LT
CURVE 11	R=25.00	STA 11+08.7 79.84'LT
CURVE 12	R=68.00	STA 11+67.2 7.58'LT
CURVE 13	R=40.00	STA 12+48.0 79.20'LT

NOTE:

1. SEE LANDSCAPE PLANS FOR SPECIFIC INFORMATION ON GROUNDCOVER TREATMENTS, PLANTINGS, ADDITIONAL SIGNAGE, ADDITIONAL HARDSCAPE TREATMENTS, AND PARK AMENITIES.
2. REFER TO CS1.01 FOR CONCRETE STAIR DETAILS.
3. REFER TO DETAILS 4 AND 11 ON CS2.01 FOR DETAILS OF CONCRETE CURB WITH AND WITHOUT FENCING.
4. REFER TO POOL DRAWINGS FOR LOCATION AND LAYOUT OF MAIN POOL, KIDDIE POOL, AND SPLASH PAD.

PLAN

SCALE: 1"=20'

0 20' 40' 60'

CONSTRUCTION DOCUMENTS
12/11/15

Weston&Sampson®
273 Dividend Road, Rocky Hill, CT 06067
(860) 513-1473 (800) SAMPSON
www.westonandsampson.com

No.	Date	Dr.By	Ck.By	App.By	Description
					APPROVED

12-15-15
DATE

REGISTERED PROFESSIONAL ENGINEER

STATE OF CONNECTICUT CHRISTOPHER B. WESTER No. 17278 REGISTERED PROFESSIONAL ENGINEER

TOWN OF GREENWICH – DEPARTMENT OF PUBLIC WORKS
RITCH AVENUE WEST, GREENWICH, CONNECTICUT

BYRAM PARK POOL REPLACEMENT

SITE LAYOUT PLAN–NORTH

CADD NO.	SCALE:	CONTRACT:	JOB NO.	DR.BY	DSN.BY	CHK.BY	APP.BY
GREENWICH	1"=20'	–	2130336	L.E.C.	L.E.C.	J.S.P.	C.B.W.

C3.01

FILE NO.

SHEET – OF –

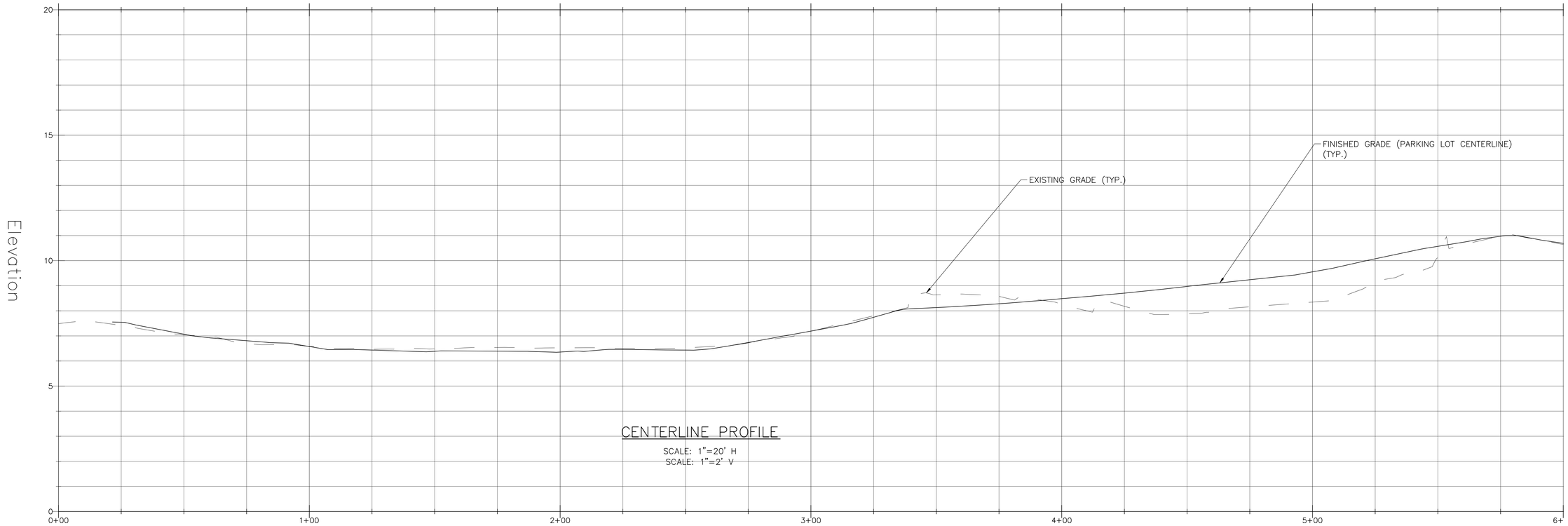

CENTERLINE PROFILE

SCALE: 1"=20' H
SCALE: 1"=2' V

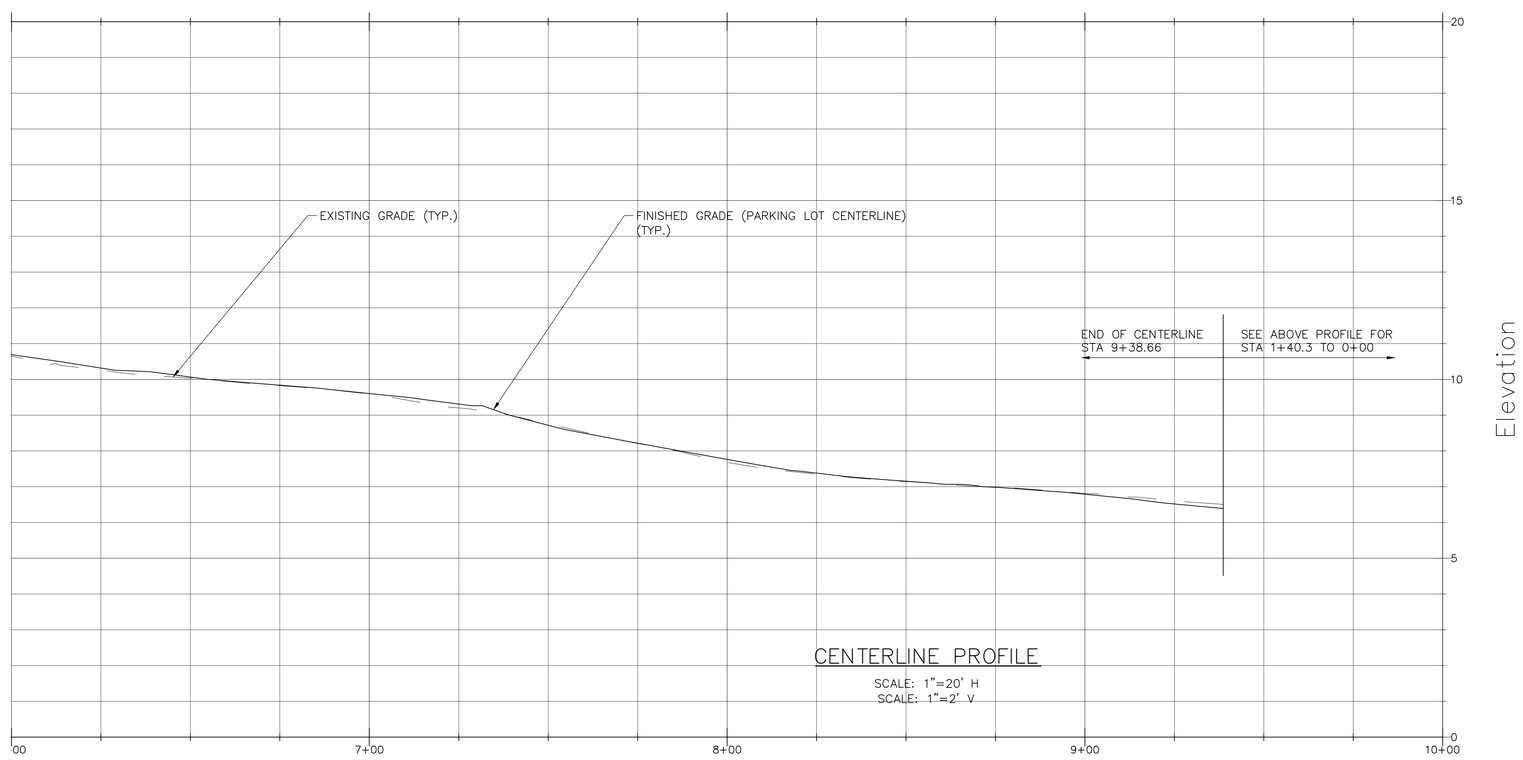

CENTERLINE PROFILE

SCALE: 1"=20' H
SCALE: 1"=2' V

CONSTRUCTION DOCUMENTS
12/11/15

Weston&Sampson®
273 Dividend Road, Rocky Hill, CT 06067
(860) 513-1473 (800) SAMPSON
www.westonandsampson.com

No.	Date	Dr.By	Ck.By	App.By	Description
		A	P	P	R O V E D

12-15-15
DATE

REGISTERED PROFESSIONAL ENGINEER

STATE OF CONNECTICUT ★ CHRISTOPHER B. WESTER ★ No. 17696 ★ LICENSED PROFESSIONAL ENGINEER

TOWN OF GREENWICH – DEPARTMENT OF PUBLIC WORKS
RITCH AVENUE WEST, GREENWICH, CONNECTICUT
BYRAM PARK POOL REPLACEMENT

PARKING LOT CENTERLINE PROFILE

CADD NO.	SCALE:	CONTRACT:	JOB NO.	DR.BY	DSN.BY	CHK.BY	APP.BY
GREENWICH	AS NOTED	–	2130336	L.E.C.	L.E.C.	J.S.P.	C.B.W.

C3.02

FILE NO.

SHEET – OF –

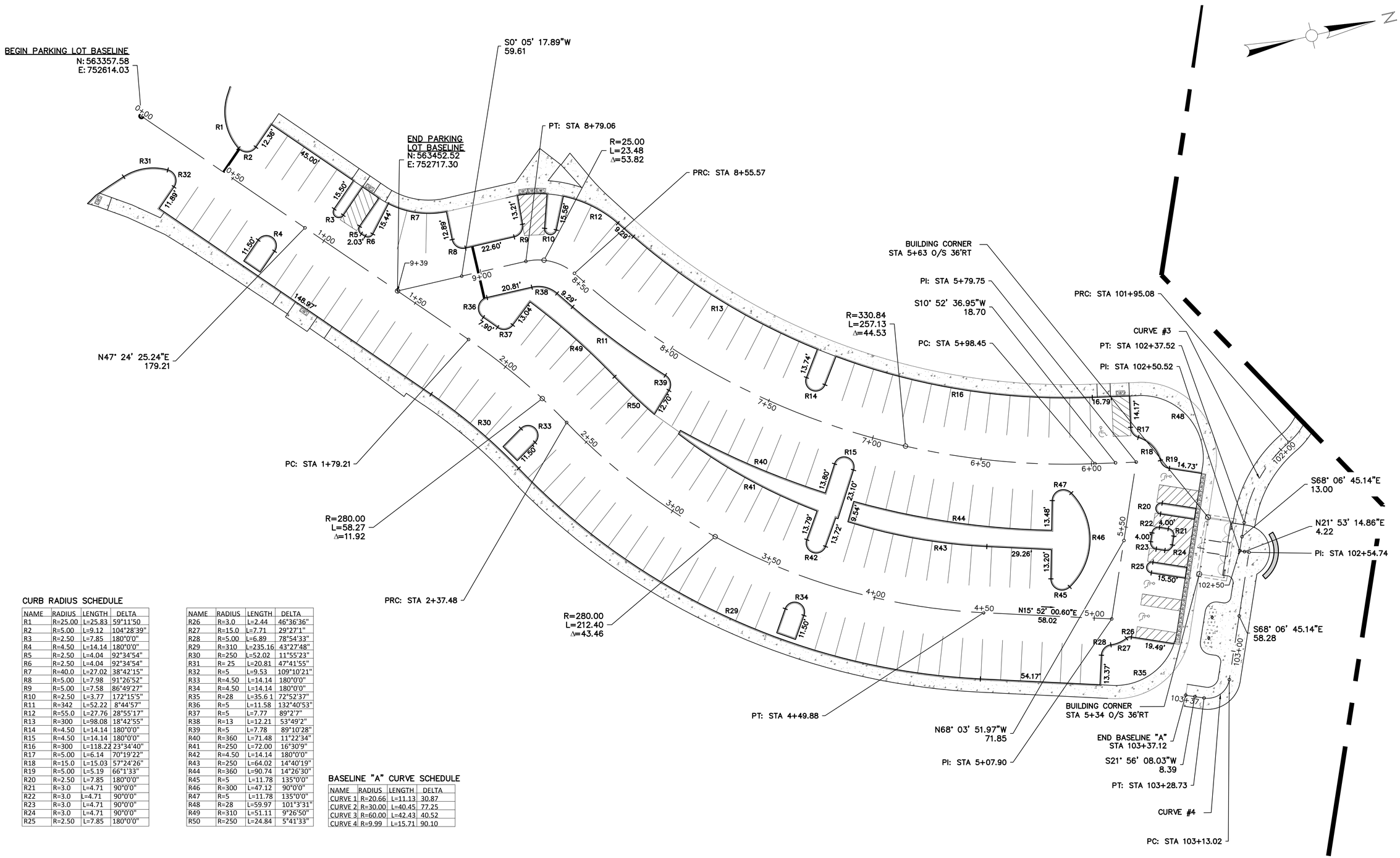

CURB RADIUS SCHEDULE

NAME	RADIUS	LENGTH	DELTA
R1	R=25.00	L=25.83	59°11'50
R2	R=5.00	L=9.12	104°28'39"
R3	R=2.50	L=7.85	180°0'0"
R4	R=4.50	L=14.14	180°0'0"
R5	R=2.50	L=4.04	92°34'54"
R6	R=2.50	L=4.04	92°34'54"
R7	R=40.0	L=27.02	38°42'15"
R8	R=5.00	L=7.98	91°26'52"
R9	R=5.00	L=7.58	86°49'27"
R10	R=2.50	L=3.77	172°15'5"
R11	R=342	L=52.22	8°44'57"
R12	R=55.0	L=27.76	28°55'17"
R13	R=300	L=98.08	18°42'55"
R14	R=4.50	L=14.14	180°0'0"
R15	R=4.50	L=14.14	180°0'0"
R16	R=300	L=118.22	23°34'40"
R17	R=5.00	L=6.14	70°19'22"
R18	R=15.0	L=15.03	57°24'26"
R19	R=5.00	L=5.19	66°1'33"
R20	R=2.50	L=7.85	180°0'0"
R21	R=3.0	L=4.71	90°0'0"
R22	R=3.0	L=4.71	90°0'0"
R23	R=3.0	L=4.71	90°0'0"
R24	R=3.0	L=4.71	90°0'0"
R25	R=2.50	L=7.85	180°0'0"

NAME	RADIUS	LENGTH	DELTA
R26	R=3.0	L=2.44	46°36'36"
R27	R=15.0	L=7.71	29°27'1"
R28	R=5.00	L=6.89	78°54'33"
R29	R=310	L=235.16	43°27'48"
R30	R=250	L=52.02	11°55'23"
R31	R= 25	L=20.81	47°41'55"
R32	R=5	L=9.53	109°10'21"
R33	R=4.50	L=14.14	180°0'0"
R34	R=4.50	L=14.14	180°0'0"
R35	R=28	L=35.6 1	72°52'37"
R36	R=5	L=11.58	132°40'53"
R37	R=5	L=7.77	89°2'7"
R38	R=13	L=12.21	53°49'2"
R39	R=5	L=7.78	89°10'28"
R40	R=360	L=71.48	11°22'34"
R41	R=250	L=72.00	16°30'9"
R42	R=4.50	L=14.14	180°0'0"
R43	R=250	L=64.02	14°40'19"
R44	R=360	L=90.74	14°26'30"
R45	R=5	L=11.78	135°0'0"
R46	R=300	L=47.12	90°0'0"
R47	R=5	L=11.78	135°0'0"
R48	R=28	L=59.97	101°3'31"
R49	R=310	L=51.11	9°26'50"
R50	R=250	L=24.84	5°41'33"

BASELINE "A" CURVE SCHEDULE

NAME	RADIUS	LENGTH	DELTA
CURVE 1	R=20.66	L=11.13	30.87
CURVE 2	R=30.00	L=40.45	77.25
CURVE 3	R=60.00	L=42.43	40.52
CURVE 4	R=9.99	L=15.71	90.10

PLAN

SCALE: 1"=20'

0 20' 40' 60'

CONSTRUCTION DOCUMENTS
12/11/15

Weston&Sampson®
273 Dividend Road, Rocky Hill, CT 06067
(860) 513-1473 (800) SAMPSON
www.westonandsampson.com

No.	Date	Dr.By	Ck.By	App.By	Description

A P P R O V E D 12-15-15 DATE

REGISTERED PROFESSIONAL ENGINEER

TOWN OF GREENWICH – DEPARTMENT OF PUBLIC WORKS
RITCH AVENUE WEST, GREENWICH, CONNECTICUT

BYRAM PARK POOL REPLACEMENT

PARKING LOT BASELINE GEOMETRY AND CURB RADIUS SCHEDULE

CADD NO.	SCALE:	CONTRACT:	JOB NO.	DR.BY	DSN.BY	CHK.BY	APP.BY
GREENWICH	1"=20'	–	2130336	L.E.C.	L.E.C.	J.S.P.	C.B.W.

C3.03

FILE NO.

SHEET – OF –

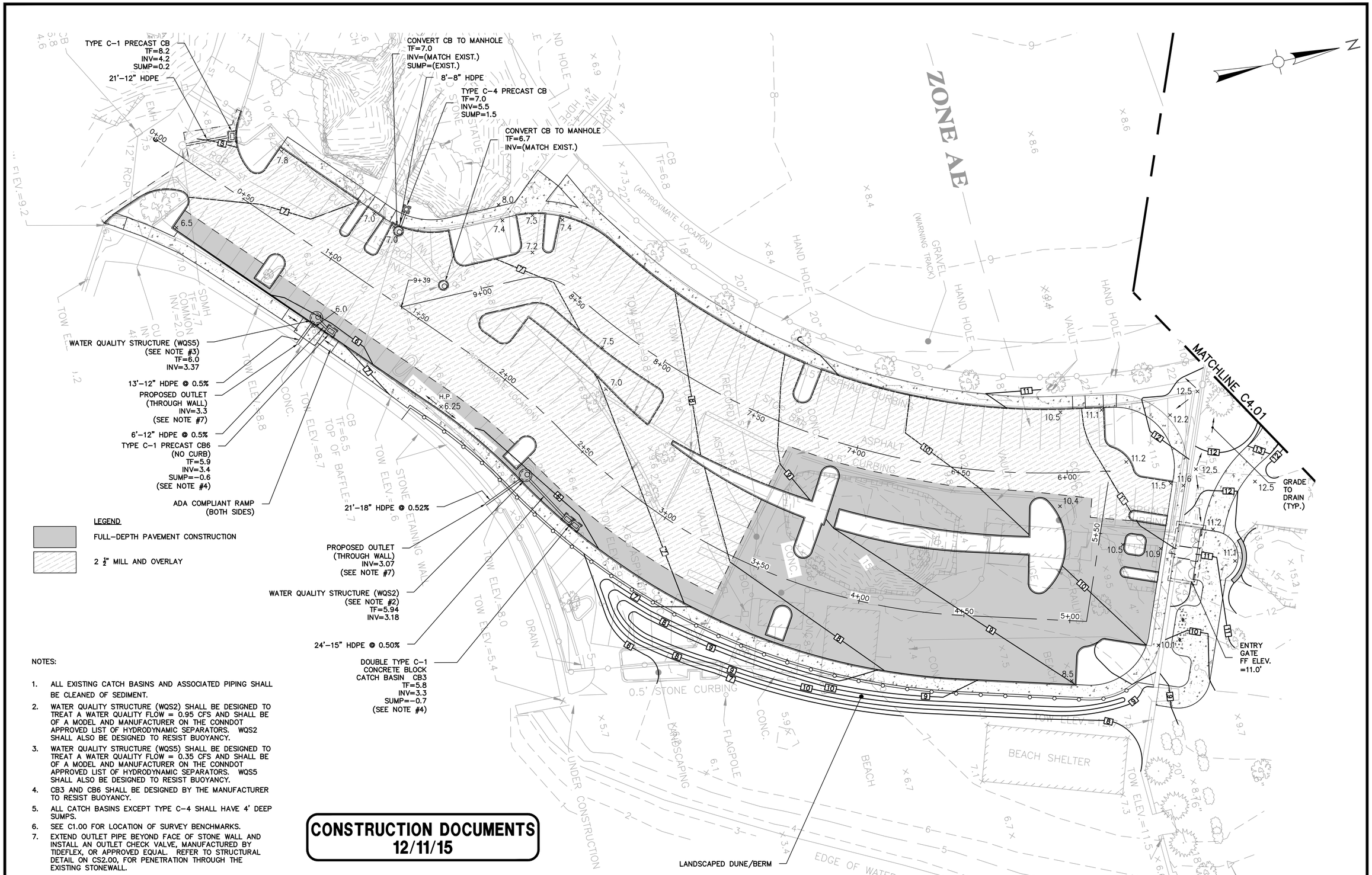

LEGEND

FULL-DEPTH PAVEMENT CONSTRUCTION

2 ½" MILL AND OVERLAY

NOTES:

1. ALL EXISTING CATCH BASINS AND ASSOCIATED PIPING SHALL BE CLEANED OF SEDIMENT.
2. WATER QUALITY STRUCTURE (WQS2) SHALL BE DESIGNED TO TREAT A WATER QUALITY FLOW = 0.95 CFS AND SHALL BE OF A MODEL AND MANUFACTURER ON THE CONNDOT APPROVED LIST OF HYDRODYNAMIC SEPARATORS. WQS2 SHALL ALSO BE DESIGNED TO RESIST BUOYANCY.
3. WATER QUALITY STRUCTURE (WQS5) SHALL BE DESIGNED TO TREAT A WATER QUALITY FLOW = 0.35 CFS AND SHALL BE OF A MODEL AND MANUFACTURER ON THE CONNDOT APPROVED LIST OF HYDRODYNAMIC SEPARATORS. WQS5 SHALL ALSO BE DESIGNED TO RESIST BUOYANCY.
4. CB3 AND CB6 SHALL BE DESIGNED BY THE MANUFACTURER TO RESIST BUOYANCY.
5. ALL CATCH BASINS EXCEPT TYPE C-4 SHALL HAVE 4' DEEP SUMPS.
6. SEE C1.00 FOR LOCATION OF SURVEY BENCHMARKS.
7. EXTEND OUTLET PIPE BEYOND FACE OF STONE WALL AND INSTALL AN OUTLET CHECK VALVE, MANUFACTURED BY TIDEFLEX, OR APPROVED EQUAL. REFER TO STRUCTURAL DETAIL ON CS2.00, FOR PENETRATION THROUGH THE EXISTING STONEWALL.

CONSTRUCTION DOCUMENTS
12/11/15

PLAN
SCALE: 1"=20'
0 20' 40' 60'

Weston&Sampson®
273 Dividend Road, Rocky Hill, CT 06067
(860) 513-1473 (800) SAMPSON
www.westonandsampson.com

No.	Date	Dr.By	Ck.By	App.By	Description
		A	P	P	R O V E D

12-15-15
DATE

REGISTERED PROFESSIONAL ENGINEER

TOWN OF GREENWICH – DEPARTMENT OF PUBLIC WORKS
RITCH AVENUE WEST, GREENWICH, CONNECTICUT

BYRAM PARK POOL REPLACEMENT

GRADING AND DRAINAGE PLAN–SOUTH

CADD NO.	SCALE:	CONTRACT:	JOB NO.	DR.BY	DSN.BY	CHK.BY	APP.BY
GREENWICH	1"=20'	–	2130336	L.E.C.	L.E.C.	J.S.P.	C.B.W.

C4.00

FILE NO.

SHEET – OF –

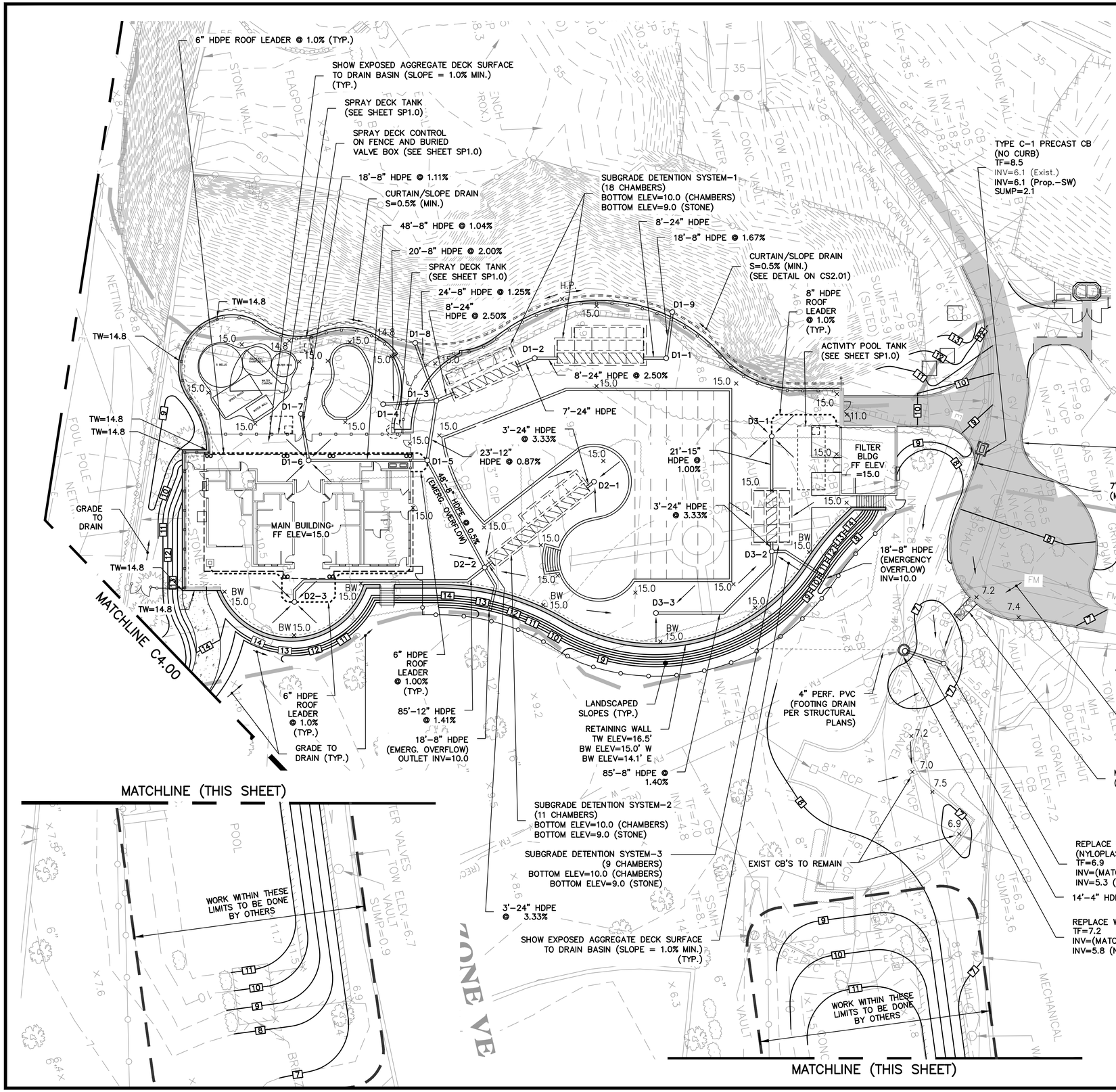

DRAINAGE SCHEDULE
(SUBGRADE DETENTION/INFILTRATION DRAIN BASINS)

D1-1
(24" DIAM.)
TF=14.6
INV=10.2 S,W

D1-2
(24" DIAM.)
TF=14.6
INV=10.2 NE,S

D1-3
(24" DIAM.)
TF=14.7
INV=10.2 N
INV=11.5 S
INV=11.2 SE,W

D1-4
(8" DIAM.)
TF=14.6
INV=11.9

D1-5
(12" DIAM.)
TF=14.7
INV=11.4 NW,SW,SE
INV=12.5 (6" R.L.)
INV=12.7 E

D1-6
(8" DIAM.)
TF=14.5
INV=11.9 NE,W

D1-7
(8" DIAM.)
TF=14.5
INV=12.1

D1-8
(8" DIAM.)
TF=14..0
INV=11.5

D1-9
(8" DIAM.)
TF=14.0
INV=10.5

D2-1
(24" DIAM.)
TF=14.7
INV=10.1

D2-2
(24" DIAM.)
TF=14.6
INV=11.0 N,S
INV=12.2 E,W

D2-3
(12" DIAM.)
TF=14.7
INV=11.5 W
INV=12.5 N,S

D3-1
(24" DIAM.)
TF=14.6
INV=10.5 E
INV=11.4 N

D3-2
(24" DIAM.)
TF=14.6
INV=10.1 W
INV=11.4 E
INV=12.5 NE

D3-3
(8" DIAM.)
TF=14.5
INV=12.1

SUBGRADE DETENTION/INFILTRATION NOTES:

1. ALL SUBGRADE DETENTION/INFILTRATION DRAIN BASINS SHALL BE Nyloplast® DRAIN BASINS, OR APPROVED EQUAL AND EACH SHALL BE FITTED WITH A FlexStorm® (Pure) PERMANANT INLET PROTECTION DEVICE.
2. 24" DIAMETER NYLOPLAST STRUCTURES SHALL HAVE 2' DEEP SUMPS.
3. OVERFLOW PIPING FROM POOLS, AND SPLASHPAD SHALL BE EQUALLY DISTRIBUTED AND PIPED TO SUBGRADE SYSTEMS 2 AND 3.

LEGEND

FULL-DEPTH PAVEMENT CONSTRUCTION

NOTES:

1. ALL EXISTING CATCH BASINS AND ASSOCIATED PIPING SHALL BE CLEANED OF SEDIMENT.
2. SUBGRADE DETENTION/INFILTRATION SYSTEM SHALL BE Stormtech®, OR APPROVED EQUAL.
3. ALL ROOF LEADERS SHALL BE 6" HDPE (SLOPE =1.0% MIN.).
4. SEE C1.00 FOR LOCATION OF SURVEY BENCHMARKS.

CONSTRUCTION DOCUMENTS
12/11/15

PLAN
SCALE: 1"=20'
0 20' 40' 60'

Weston&Sampson®
273 Dividend Road, Rocky Hill, CT 06067
(860) 513-1473 (800) SAMPSON
www.westonandsampson.com

No.	Date	Dr.By	Ck.By	App.By	Description
		A	P	P	R O V E D

REGISTERED PROFESSIONAL ENGINEER — DATE 12-15-15

TOWN OF GREENWICH – DEPARTMENT OF PUBLIC WORKS
RITCH AVENUE WEST, GREENWICH, CONNECTICUT
BYRAM PARK POOL REPLACEMENT

GRADING AND DRAINAGE PLAN-NORTH

CADD NO.	SCALE:	CONTRACT:	JOB NO.	DR.BY	DSN.BY	CHK.BY	APP.BY
GREENWICH	1"=20'	–	2130336	L.E.C.	L.E.C.	J.S.P.	C.B.W.

C4.01

FILE NO.

SHEET – OF –

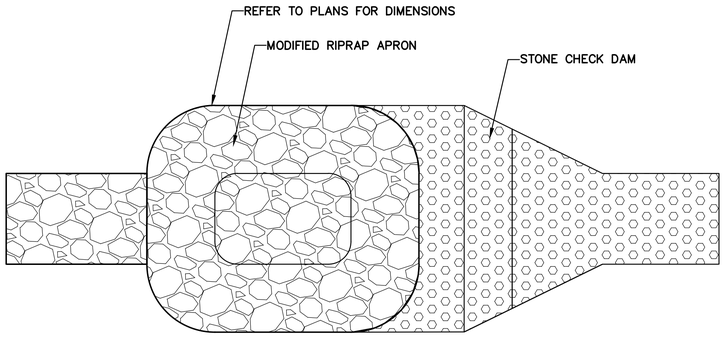

PLAN

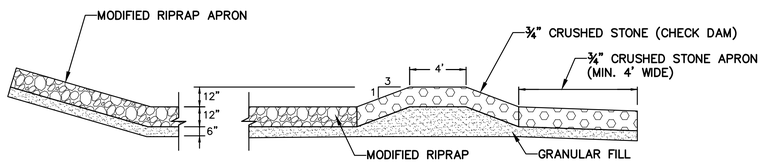

SECTION

PRE-TREATMENT SEDIMENT FOREBAY DETAIL

N.T.S

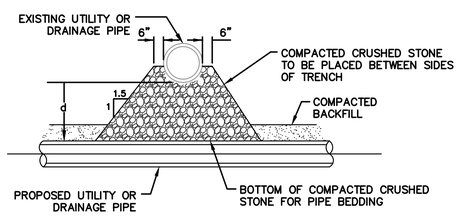

CRUSHED STONE SUPPORT WHEN d ≥12"

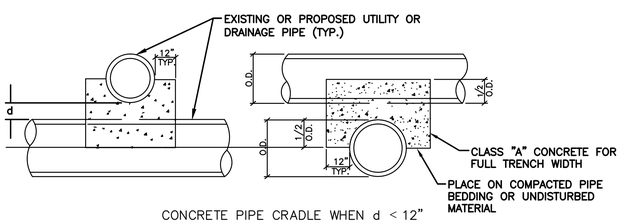

CONCRETE PIPE CRADLE WHEN d < 12"

NOTES:
1. d = DISTANCE BETWEEN UTILITY AND DRAINAGE PIPES.
2. SUPPORTS SHALL BE INSTALLED WHERE SPECIFIED ON THE PLANS AND WHERE DIRECTED BY THE ENGINEER.
3. CRUSHED STONE SUPPORTS SHALL BE INCLUDED IN THE COST OF THE PROPOSED UTILITY OR DRAINAGE PIPE AND CONCRETE PIPE CRADLES SHALL BE PAID FOR AS "MISCELLANEOUS CONCRETE".

TYPICAL UTILITY SUPPORTS

N.T.S

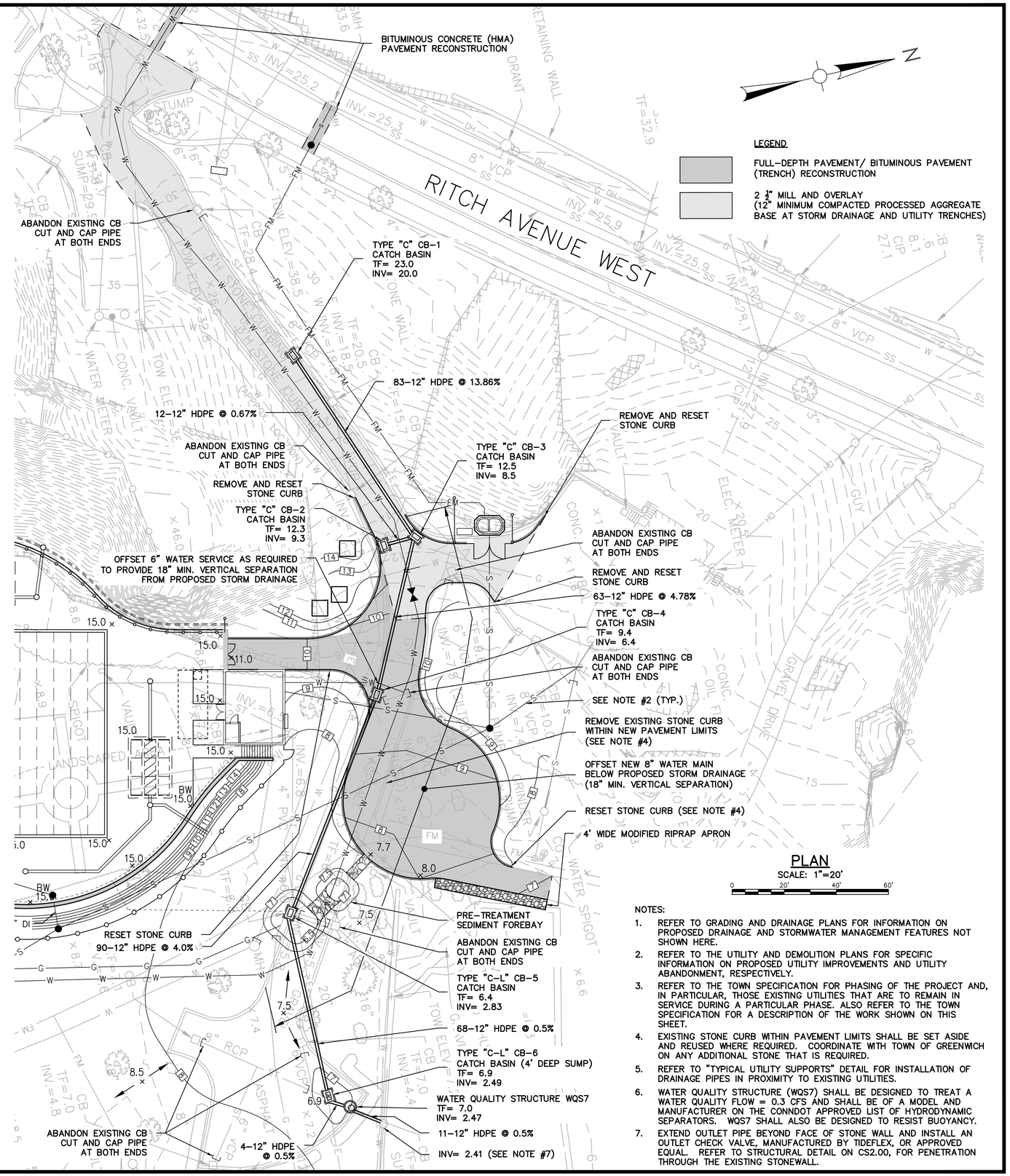

PLAN

SCALE: 1"=20'

0 20' 40' 60'

NOTES:
1. REFER TO GRADING AND DRAINAGE PLANS FOR INFORMATION ON PROPOSED DRAINAGE AND STORMWATER MANAGEMENT FEATURES NOT SHOWN HERE.
2. REFER TO THE UTILITY AND DEMOLITION PLANS FOR SPECIFIC INFORMATION ON PROPOSED UTILITY IMPROVEMENTS AND UTILITY ABANDONMENT, RESPECTIVELY.
3. REFER TO THE TOWN SPECIFICATION FOR PHASING OF THE PROJECT AND, IN PARTICULAR, THOSE EXISTING UTILITIES THAT ARE TO REMAIN IN SERVICE DURING A PARTICULAR PHASE. ALSO REFER TO THE TOWN SPECIFICATION FOR A DESCRIPTION OF THE WORK SHOWN ON THIS SHEET.
4. EXISTING STONE CURB WITHIN PAVEMENT LIMITS SHALL BE SET ASIDE AND REUSED WHERE REQUIRED. COORDINATE WITH TOWN OF GREENWICH ON ANY ADDITIONAL STONE THAT IS REQUIRED.
5. REFER TO "TYPICAL UTILITY SUPPORTS" DETAIL FOR INSTALLATION OF DRAINAGE PIPES IN PROXIMITY TO EXISTING UTILITIES.
6. WATER QUALITY STRUCTURE (WQS7) SHALL BE DESIGNED TO TREAT A WATER QUALITY FLOW = 0.3 CFS AND SHALL BE OF A MODEL AND MANUFACTURER ON THE CONNDOT APPROVED LIST OF HYDRODYNAMIC SEPARATORS. WQS7 SHALL ALSO BE DESIGNED TO RESIST BUOYANCY.
7. EXTEND OUTLET PIPE BEYOND FACE OF STONE WALL AND INSTALL AN OUTLET CHECK VALVE, MANUFACTURED BY TIDEFLEX, OR APPROVED EQUAL. REFER TO STRUCTURAL DETAIL ON CS2.00, FOR PENETRATION THROUGH THE EXISTING STONEWALL.

Weston&Sampson®
273 Dividend Road, Rocky Hill, CT 06067
(860) 513-1473 (800) SAMPSON
www.westonandsampson.com

No.	Date	Dr.By	Ck.By	App.By	Description
1	1/27/16	LEC	JSP	JSP	MAINTENANCE ROAD REVISIONS

APPROVED

1-27-16
DATE

REGISTERED PROFESSIONAL ENGINEER

STATE OF CONNECTICUT ★ CHRISTOPHER B. WESTER ★ No. 17696 ★ LICENSED PROFESSIONAL ENGINEER

TOWN OF GREENWICH – DEPARTMENT OF PUBLIC WORKS
RITCH AVENUE WEST, GREENWICH, CONNECTICUT

BYRAM PARK POOL REPLACEMENT

MAINTENANCE ROAD DRAINAGE IMPROVEMENT PLAN

CADD NO.	SCALE:	CONTRACT:	JOB NO.	DR.BY	DSN.BY	CHK.BY	APP.BY
GREENWICH	1"=20'	–	2130336	L.E.C.	L.E.C.	J.S.P.	C.B.W.

C4.01A

FILE NO.

SHEET – OF –

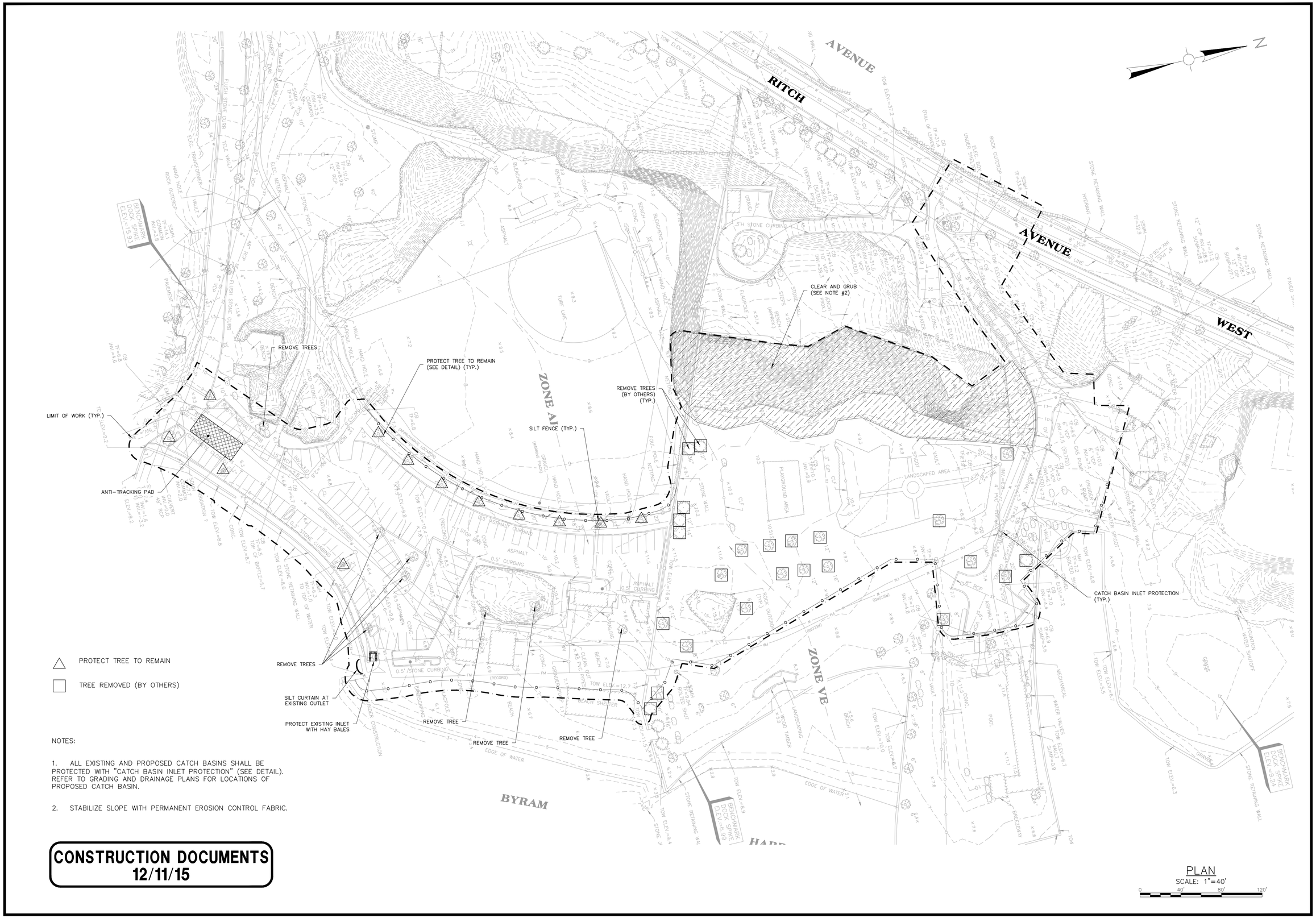

NOTES:

1. ALL EXISTING AND PROPOSED CATCH BASINS SHALL BE PROTECTED WITH "CATCH BASIN INLET PROTECTION" (SEE DETAIL). REFER TO GRADING AND DRAINAGE PLANS FOR LOCATIONS OF PROPOSED CATCH BASIN.

2. STABILIZE SLOPE WITH PERMANENT EROSION CONTROL FABRIC.

CONSTRUCTION DOCUMENTS
12/11/15

PLAN
SCALE: 1"=40'
0 40' 80' 120'

Weston&Sampson®
273 Dividend Road, Rocky Hill, CT 06067
(860) 513-1473 (800) SAMPSON
www.westonandsampson.com

No.	Date	Dr.By	Ck.By	App.By	Description

A P P R O V E D
12-15-15
REGISTERED PROFESSIONAL ENGINEER
DATE

STATE OF CONNECTICUT ★ CHRISTOPHER B. WESTER ★ No. 17706 ★ LICENSED PROFESSIONAL ENGINEER

TOWN OF GREENWICH – DEPARTMENT OF PUBLIC WORKS
RITCH AVENUE WEST, GREENWICH, CONNECTICUT
BYRAM PARK POOL REPLACEMENT

EROSION AND SEDIMENTATION CONTROL PLAN

CADD NO.	SCALE:	CONTRACT:	JOB NO.	DR.BY	DSN.BY	CHK.BY	APP.BY
GREENWICH	1"=40'	–	21303.36	L.E.C.	L.E.C.	J.S.P.	C.B.W.

C5.00

FILE NO.

SHEET – OF –

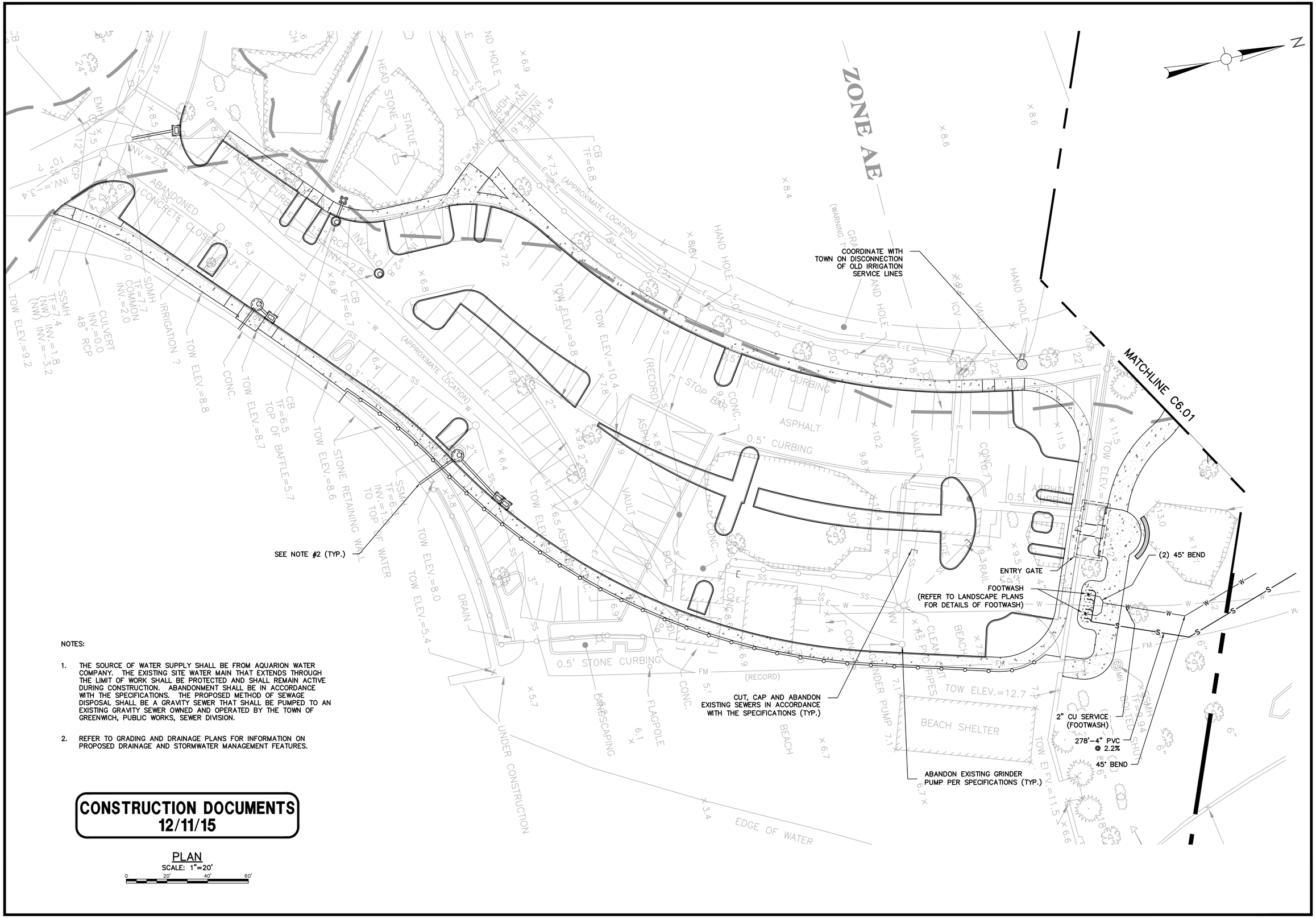

NOTES:

1. THE SOURCE OF WATER SUPPLY SHALL BE FROM AQUARION WATER COMPANY. THE EXISTING SITE WATER MAIN THAT EXTENDS THROUGH THE LIMIT OF WORK SHALL BE PROTECTED AND SHALL REMAIN ACTIVE DURING CONSTRUCTION. ABANDONMENT SHALL BE IN ACCORDANCE WITH THE SPECIFICATIONS. THE PROPOSED METHOD OF SEWAGE DISPOSAL SHALL BE A GRAVITY SEWER THAT SHALL BE PUMPED TO AN EXISTING GRAVITY SEWER OWNED AND OPERATED BY THE TOWN OF GREENWICH, PUBLIC WORKS, SEWER DIVISION.

2. REFER TO GRADING AND DRAINAGE PLANS FOR INFORMATION ON PROPOSED DRAINAGE AND STORMWATER MANAGEMENT FEATURES.

CONSTRUCTION DOCUMENTS
12/11/15

PLAN
SCALE: 1"=20'
0 20' 40' 60'

Weston&Sampson®
273 Dividend Road, Rocky Hill, CT 06067
(860) 513-1473 (800) SAMPSON
www.westonandsampson.com

No.	Date	Dr.By	Ck.By	App.By	Description

A P P R O V E D
12-15-15
REGISTERED PROFESSIONAL ENGINEER DATE

TOWN OF GREENWICH – DEPARTMENT OF PUBLIC WORKS
RITCH AVENUE WEST, GREENWICH, CONNECTICUT
BYRAM PARK POOL REPLACEMENT
UTILITY PLAN–SOUTH

CADD NO.	SCALE:	CONTRACT:	JOB NO.	DR.BY	DSN.BY	CHK.BY	APP.BY
GREENWICH	1"=20'	–	2130336	L.E.C.	L.E.C.	J.S.P.	C.B.W.

C6.00
FILE NO.
SHEET – OF –

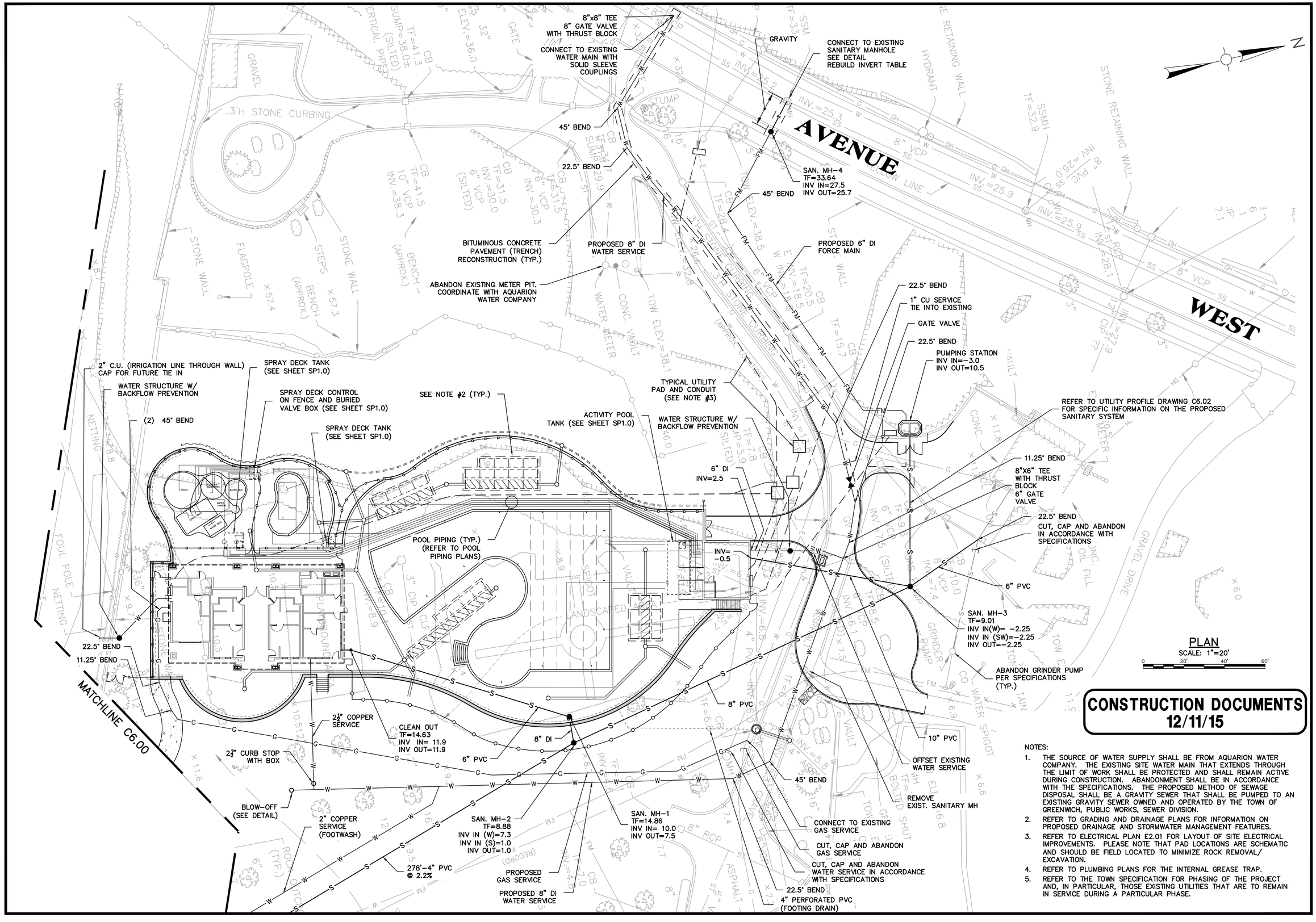

PLAN

SCALE: 1"=20'

0 20' 40' 60'

CONSTRUCTION DOCUMENTS
12/11/15

NOTES:

1. THE SOURCE OF WATER SUPPLY SHALL BE FROM AQUARION WATER COMPANY. THE EXISTING SITE WATER MAIN THAT EXTENDS THROUGH THE LIMIT OF WORK SHALL BE PROTECTED AND SHALL REMAIN ACTIVE DURING CONSTRUCTION. ABANDONMENT SHALL BE IN ACCORDANCE WITH THE SPECIFICATIONS. THE PROPOSED METHOD OF SEWAGE DISPOSAL SHALL BE A GRAVITY SEWER THAT SHALL BE PUMPED TO AN EXISTING GRAVITY SEWER OWNED AND OPERATED BY THE TOWN OF GREENWICH, PUBLIC WORKS, SEWER DIVISION.
2. REFER TO GRADING AND DRAINAGE PLANS FOR INFORMATION ON PROPOSED DRAINAGE AND STORMWATER MANAGEMENT FEATURES.
3. REFER TO ELECTRICAL PLAN E2.01 FOR LAYOUT OF SITE ELECTRICAL IMPROVEMENTS. PLEASE NOTE THAT PAD LOCATIONS ARE SCHEMATIC AND SHOULD BE FIELD LOCATED TO MINIMIZE ROCK REMOVAL/ EXCAVATION.
4. REFER TO PLUMBING PLANS FOR THE INTERNAL GREASE TRAP.
5. REFER TO THE TOWN SPECIFICATION FOR PHASING OF THE PROJECT AND, IN PARTICULAR, THOSE EXISTING UTILITIES THAT ARE TO REMAIN IN SERVICE DURING A PARTICULAR PHASE.

Weston&Sampson®
273 Dividend Road, Rocky Hill, CT 06067
(860) 513-1473 (800) SAMPSON
www.westonandsampson.com

No.	Date	Dr.By	Ck.By	App.By	Description
		A	P	P	R O V E D

12-15-15
DATE

REGISTERED PROFESSIONAL ENGINEER

TOWN OF GREENWICH – DEPARTMENT OF PUBLIC WORKS
RITCH AVENUE WEST, GREENWICH, CONNECTICUT
BYRAM PARK POOL REPLACEMENT

UTILITY PLAN–NORTH

CADD NO.	SCALE:	CONTRACT:	JOB NO.	DR.BY	DSN.BY	CHK.BY	APP.BY
GREENWICH	1"=20'	–	2130336	L.E.C.	L.E.C.	J.S.P.	C.B.W.

C6.01

FILE NO.

SHEET – OF –

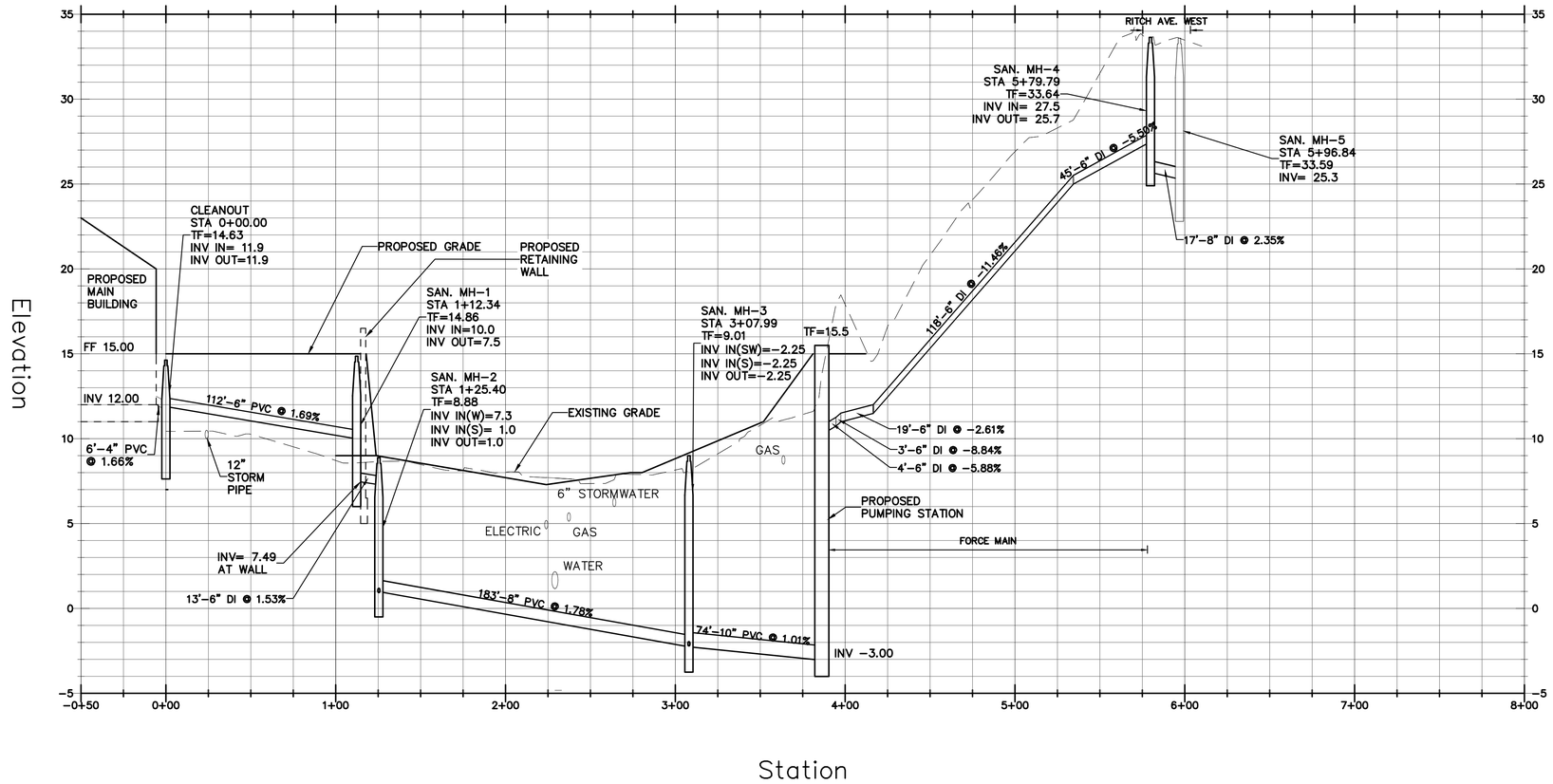

SEWER PROFILE
VERTICAL SCALE: 1"=4'
HORIZONTAL SCALE: 1"=40'

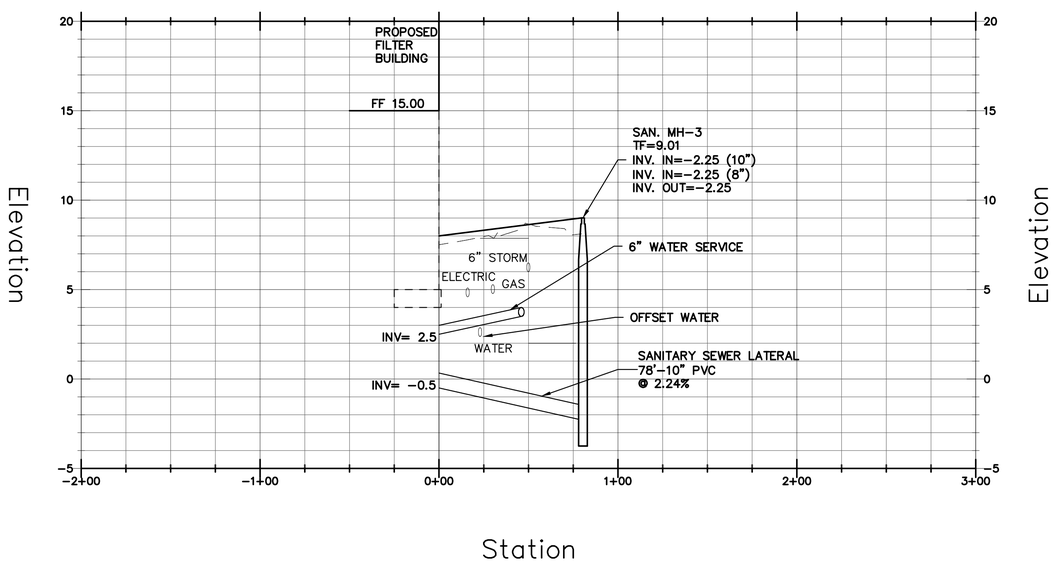

SEWER LATERAL PROFILE
VERTICAL SCALE: 1"=4'
HORIZONTAL SCALE: 1"=40'

CONSTRUCTION DOCUMENTS
12/11/15

Weston&Sampson®
273 Dividend Road, Rocky Hill, CT 06067
(860) 513-1473 (800) SAMPSON
www.westonandsampson.com

No.	Date	Dr.By	Ck.By	App.By	Description	DATE
		A	P	P	R O V E D	12-15-15

REGISTERED PROFESSIONAL ENGINEER

TOWN OF GREENWICH – DEPARTMENT OF PUBLIC WORKS
RITCH AVENUE WEST, GREENWICH, CONNECTICUT
BYRAM PARK POOL REPLACEMENT

UTILITY PROFILE – NORTH

CADD NO.	SCALE:	CONTRACT:	JOB NO.	DR.BY	DSN.BY	CHK.BY	APP.BY
GREENWICH	AS NOTED	–	2130336	L.E.C.	L.E.C.	J.S.P.	C.B.W.

FILE NO. C6.02

SHEET – OF –

EROSION CONTROL NOTES

PROJECT DESCRIPTION

THE PROJECT INVOLVES THE CONSTRUCTION OF A NEW PUBLIC POOL, ASSOCIATED BUILDINGS, AND ALL RELATED PAVING, UTILITIES, CURBING, DRAINAGE, SIDEWALK, RETAINING WALL, FENCING, AND LANDSCAPING. THE PROJECT IS LOCATED AT BYRAM PARK, RITCH AVENUE, GREENWICH, CONNECTICUT.

WATER EROSION CONTROL MEASURES

EROSION AND SEDIMENT CONTROL MEASURES SHALL CONSIST OF HAY BALES, NON-WOVEN FILTER FABRIC MATERIAL WITH A WIRE MESH BACKING, OR A WOVEN FABRIC (SILT FENCE). ALL MATERIAL SHALL BE NEW AND FREE FROM DEFECTS THAT WOULD COMPROMISE THE EFFECTIVENESS OF THE CONTROL MEASURES. AFTER COMPLETION, ALL MATERIAL SHALL BE DISPOSED OF PROPERLY. LOCATION OF EROSION AND SEDIMENT CONTROL STRUCTURES CAN BE SEEN ON THE SITE PLAN (SEE LEGEND FOR CONTROL STRUCTURE SYMBOL). NOTE: ALL WATER CONTROL MEASURES ARE LOCATED DOWN-GRADIENT FROM DISTURBED AREAS. IF TOPSOIL IS TO BE STORED IN AN AREA NOT SHOWN ON THE SITE PLAN, DUE TO UNFORESEEN EVENTS, PRIOR TO STORING, THE DOWN-GRADIENT PERIMETER OF THE STORAGE AREA SHALL BE PROPERLY PROTECTED PER THE SPECIFICATIONS DETAILED ON THIS PLAN.

WIND EROSION CONTROL MEASURES

DURING DRY WEATHER CONDITIONS, DISTURBED AREAS SHALL BE PROTECTED AGAINST WIND EROSION. DUSTY AREAS SHALL BE SPRAYED WITH WATER TO PREVENT WIND-BORNE PARTICLES.

CONSTRUCTION LITTER CONTROL

DURING CONSTRUCTION, ALL WRAPPINGS, BOXES, SCRAPS OF BUILDING MATERIAL, AND OTHER LITTER ITEMS SHALL BE DISPOSED OF PROPERLY BY USE OF A DUMPSTER OR CARTED AWAY. THE SITE SHALL BE INSPECTED AND CLEANED DAILY DURING CONSTRUCTION.

TYPICAL CONSTRUCTION SEQUENCE

PRIOR TO THE DEVELOPMENT OF THE PARCEL, EROSION AND SEDIMENT CONTROL STRUCTURES SHALL BE INSTALLED AS SHOWN ON PLAN. A TYPICAL SEQUENCE OF DEVELOPMENT IS:

1. CLEARLY DEFINE AND FLAG THE PROPERTY LIMITS OF AND LIMITS OF CONSTRUCTION. ALL WORK IS TO BE PERFORMED WITHIN THE LIMIT OF WORK.
2. HOLD PRE-CONSTRUCTION MEETING (REMEMBER TO CALL BEFORE YOU DIG 1-800-922-4455)
3. INSTALL PERIMETER EROSION AND SEDIMENTATION CONTROLS IN ACCORDANCE WITH THE GRADING AND EROSION CONTROL PLAN.
4. CUT TREES WITHIN THE GRADING LIMITS AND REMOVE CUT WOOD. CHIP BRUSH AND REMOVE OFFSITE.
5. EXCAVATE ALL STUMPS LOCATED IN THE STRUCTURAL AREAS AND REMOVE TO A DISPOSAL SITE OR STOCKPILE AREA TO BE CHIPPED.
6. STRIP ALL TOPSOIL THAT IS WITHIN THE GRADING LIMITS. STOCKPILE ALL TOPSOIL AS SHOWN ON PLANS AND SECURE WITH EROSION AND SEDIMENT CONTROLS.
7. EXCAVATE AND CONSTRUCT FOUNDATION OF BUILDING WITH APPROPRIATE STUBS/OPENINGS FOR UTILITIES. UPON COMPLETION BACKFILL FOUNDATION WALLS.
8. CUT OR FILL REMAINDER OF SITE TO ESTABLISH THE SUB-GRADE.
11. INSTALL SANITARY SYSTEM AND DRAINAGE FACILITIES STARTING AT THE OUTFALL AND PROCEEDING UPGRADE. INSTALL REMAINING UTILITIES. REPAIR PAVEMENT OVER UTILITY TRENCHES IN ACCORDANCE WITH "PERMANENT PAVEMENT REPLACEMENT DETAIL".
9. CONNECT UTILITY SERVICE LATERALS TO BUILDING.
10. PLACE, GRADE AND COMPACT THE PROCESSED AGGREGATE IN THE PARKING AND DRIVEWAY BASE.
11. APPLY STABILIZATION MEASURES (TOPSOIL, SEEDING, ETC.) TO REMAINING DISTURBED AREAS IN ACCORDANCE WITH THE EROSION AND SEDIMENT CONTROL DETAILS.
12. INSPECT AND CLEAN DRAINAGE SYSTEMS AS NEEDED.
13. CONSTRUCT CONCRETE SIDEWALKS, AND SIDEWALK RAMPS AS SHOWN ON THE PLANS.
14. TOPSOIL AND GRADE WHERE REQUIRED AND WITHIN 2 FEET OF PROPOSED CURBING.
15. INSTALL FIRST COURSE OF BITUMINOUS CONCRETE PAVEMENT.
16. INSTALL CURBING AS SHOWN ON PLANS.
17. FINE GRADE, RAKE, SEED, AND MULCH.
18. UPON SUBSTANTIAL COMPLETION OF THE BUILDING, COMPLETE THE BALANCE OF SITE WORK AND STABILIZATION OF ALL OTHER DISTURBED AREAS.
19. WHEN ALL OTHER WORK HAS BEEN COMPLETED, REPAIR AND SWEEP ALL PAVED AREAS FOR FINAL COURSE OF PAVING. INSPECT DRAINAGE SYSTEM AND CLEAN AS NEEDED.
20. INSTALL FINAL COURSE OF BITUMINOUS CONCRETE PAVEMENT.
21. AFTER ENTIRE SITE IS STABILIZED IN ACCORDANCE WITH THE APPLICABLE EROSION AND SEDIMENT CONTROL MEASURES, REMOVE TEMPORARY EROSION AND SEDIMENT CONTROLS (E.G. SILT FENCES).

DURING THIS TIME ALL EROSION AND SEDIMENT STRUCTURES SHALL BE MAINTAINED IN PROPER WORKING ORDER. DISTURBED AREAS SHALL BE KEPT TO A MINIMUM AND SHALL ONLY TAKE PLACE WHERE IMMEDIATELY REQUIRED TO FURTHER CONSTRUCTION. IT IS DESIRABLE FROM AN EROSION PREVENTION CONCERN TO MINIMIZE DISTURBED AREAS. FINAL GRADING AND SEEDING SHALL TAKE PLACE AS SOON AS PRACTICAL.

A RAIN GAUGE SHALL BE PLACED AT THE PROJECT IN A WORKABLE LOCATION AND MONITORED DURING RAINFALL PERIODS UNTIL ALL DISTURBED AREAS ARE STABILIZED. IN THE EVENT THERE IS A RAINFALL GREATER THAN 1/2" IN A 12 HOUR PERIOD, ALL EROSION CONTROL MEASURES SHALL BE CHECKED AND REPAIRED AS REQUIRED. IF NO RAIN GAUGE IS USED, ALL EROSION CONTROL MEASURES SHALL BE CHECKED AFTER ALL RAINFALL EVENTS.

A CHECK LIST PROVIDED BY THE OWNER'S REPRESENTATIVE SHALL BE FILLED OUT EVERY WEEK OR AFTER EACH RAINFALL EVENT OF 1/2" OR GREATER.

SEEDING

ALL DISTURBED AREAS SHALL BE RESTORED WITH A VEGETATIVE STABILIZATION MATERIAL (GRASS). THE SOIL SHALL BE ADJUSTED TO A PH OF 5.7 OR HIGHER. THIS CAN BE DONE BY USING THE APPROPRIATE AMOUNT OF GROUND LIMESTONE OR FERTILIZER, AS REQUIRED BY A SOIL TEST. IF A TEST IS NOT PERFORMED, THE AREA SHALL BE FERTILIZED WITH 10-10-10 OR EQUAL AT A RATE OF 300 POUNDS PER ACRE (11 POUNDS PER 1000 SQUARE FEET). THE LIME OR FERTILIZER SHALL BE WORKED INTO THE SOIL A MINIMUM OF 4 INCHES. ALL STONES TWO INCHES OF LARGER IN DIAMETER SHALL BE REMOVED ALONG WITH ALL DELETERIOUS MATERIAL (SUCH AS BUILDING MATERIAL WASTE, STUMPS, ETC.). THE SEED SHALL BE APPLIED BY EITHER HAND, CYCLONE SEEDER, A CULTIPACKER TYPE SEEDER OR HYDROSEEDER (SLURRY INCLUDING BOTH SEED AND FERTILIZER). HYDROSEEDINGS WHICH ARE MULCHED MAY BE LEFT ON SOIL SURFACE. SEED MIX SHALL CONSIST OF 20 POUNDS OF KENTUCKY BLUEGRASS, 20 POUNDS OF CREEPING RED FESCUE, AND 5 POUNDS OF PERENNIAL RYEGRASS, FOR A TOTAL OF 45 POUNDS OF SEED PER ACRE. RECOMMENDED SEEDING DATES ARE APRIL 1 THROUGH JUNE 1 AND AUGUST 15 THROUGH SEPTEMBER 1. ALL SEEDED AREAS SHALL BE MAINTAINED TO ENSURE PROPER GROWTH AND TO MINIMIZE EROSION.

MULCH

MULCH SHALL CONSIST OF STRAW OR HAY. IT SHALL BE APPLIED AT A RATE OF 1.5 – 2.0 TONS PER ACRE, OR 70 – 90 POUNDS (1-1/2 – 2) BALES) PER 1000 SQUARE FEET (31.6' X 31.6'). ALL MULCH MATERIAL SHALL BE FREE FROM WEEDS AND COARSE MATTER. ALL REQUIRED GRADING SHALL BE COMPLETE PRIOR TO PLACEMENT OF MULCH. APPLICATION OF MULCH MATERIAL SHALL BE BY HAND OR MACHINE AND UNIFORM IN THICKNESS. MULCH MATERIAL SHALL BE ANCHORED IMMEDIATELY AFTER APPLICATION TO MINIMIZE WINDBLOWN DISTURBANCE. ANCHORING SHALL BE BY MECHANICAL DEVICE OR LIQUID MULCH BINDER DURING MULCH APPLICATION.

GENERAL NOTES

ALL EROSION AND SEDIMENT CONTROL MEASURES SHALL BE PERFORMED IN ACCORDANCE WITH THE 2002 CONNECTICUT GUIDELINES FOR EROSION AND SEDIMENT CONTROL, OR LATEST REVISION.

ALL DISTURBED AREAS SHALL BE KEPT TO A MINIMUM. FINAL GRADING AND RESTORATION SHALL BE ACCOMPLISHED AS SOON AS PRACTICAL.

EROSION AND SEDIMENT CONTROL STRUCTURES SHALL BE INSTALLED PRIOR TO SITE WORK. IF IT IS NOT POSSIBLE TO DO SO, THE OWNER'S REPRESENTATIVE SHALL BE NOTIFIED IN ORDER TO MAINTAIN THE INTEGRITY OF DESIGN.

ALL CONTROL STRUCTURES SHALL BE MAINTAINED THROUGHOUT CONSTRUCTION AND REMOVED WHEN STABILIZATION HAS BEEN ATTAINED. IF THE PROPOSED CONTROL MEASURES ARE NOT SATISFACTORY, ADDITIONAL CONTROL MEASURES SHALL BE TAKEN.

ALL RUNOFF FROM THE DISTURBED AREA SHALL BE CONTROLLED AND FILTERED. NON-WOVEN SYNTHETIC FIBER FILTER FABRIC, HAY BALES OR SILTATION FENCE SHALL BE USED IN THE AREAS SHOWN ON THE SITE PLAN AND INSTALLED AS SHOWN ON THIS PLAN.

CONTRACTOR SHALL BE RESPONSIBLE FOR IMPLEMENTATION OF SEDIMENT AND EROSION CONTROL MEASURES. THIS RESPONSIBILITY INCLUDES THE ACQUISITION OF MATERIALS, INSTALLATION, AND MAINTENANCE OF EROSION AND SEDIMENT STRUCTURES, THE COMMUNICATION AND DETAILED EXPLANATION TO ALL PEOPLE INVOLVED IN THE SITE WORK OF THE REQUIREMENTS AND OBJECTIVE OF THE EROSION AND SEDIMENT CONTROL MEASURES. IN THE EVENT THE APPLICANT IS NOT OWNER OF THE PROPERTY, THE CURRENT OWNER SHALL HAVE ALL THE RESPONSIBILITIES LISTED IN THIS PARAGRAPH AND SHALL SUBMIT A WORKING PHONE NUMBER FOR CONTACT AT TIME OF APPLICATION FOR PERMITS. ANY CHANGE IN ENGINEER SHALL BE NOTED AT THIS TIME.

THE OWNER'S REPRESENTATIVE SHALL BE NOTIFIED OF ANY PROPOSED ALTERATION TO THE EROSION AND SEDIMENT CONTROL PLAN, PRIOR TO ALTERING, IN ORDER TO ENSURE THE FEASIBILITY OF THE ADDITION, SUBTRACTION, OR CHANGE IN THE PLAN.

CONSTRUCTION DOCUMENTS
12/11/15

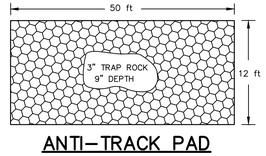

ANTI-TRACK PAD
N.T.S.

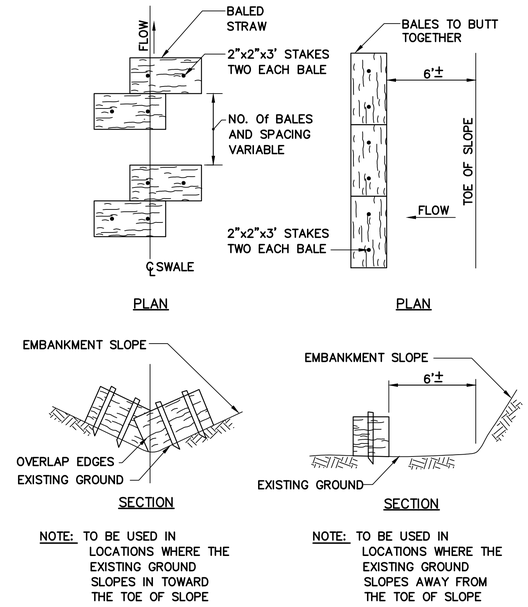

NOTE: TO BE USED IN LOCATIONS WHERE THE EXISTING GROUND SLOPES IN TOWARD THE TOE OF SLOPE

NOTE: TO BE USED IN LOCATIONS WHERE THE EXISTING GROUND SLOPES AWAY FROM THE TOE OF SLOPE

STRAW BALES DETAIL
N.T.S.

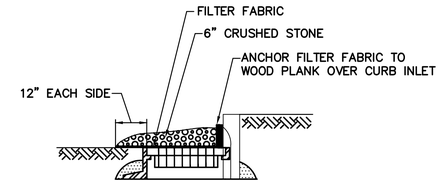

CATCH BASIN INLET PROTECTION DETAIL
N.T.S.

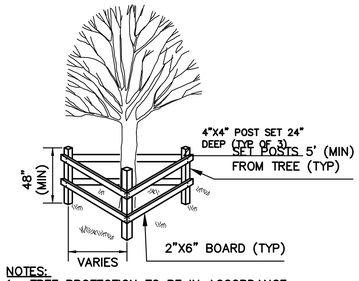

NOTES:
1. TREE PROTECTION TO BE IN ACCORDANCE WITH CONNECTICUT GUIDELINES FOR SOIL EROSION AND SEDIMENT CONTROL

TRIANGULAR BOARD FENCE TREE TO BE SAVED
N.T.S.

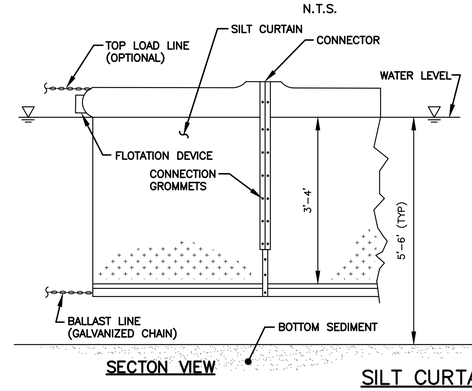

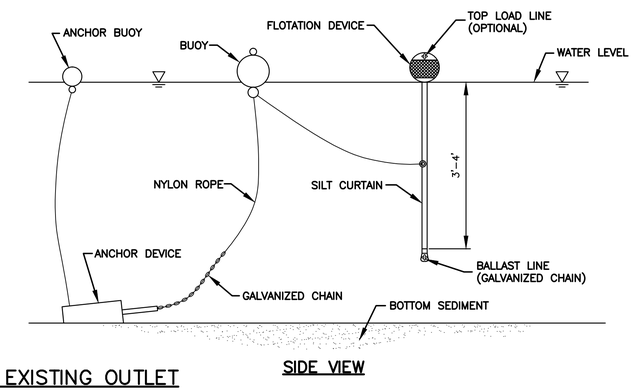

SILT CURTAIN AT EXISTING OUTLET
N.T.S.

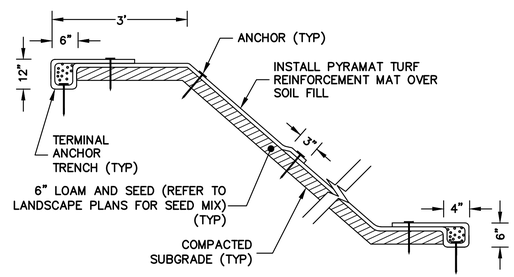

NOTES
1. INSTALL AND ANCHOR PER MANUFACTURER'S SPECIFICATIONS

VEGETATIVE SLOPE DETAIL
N.T.S.

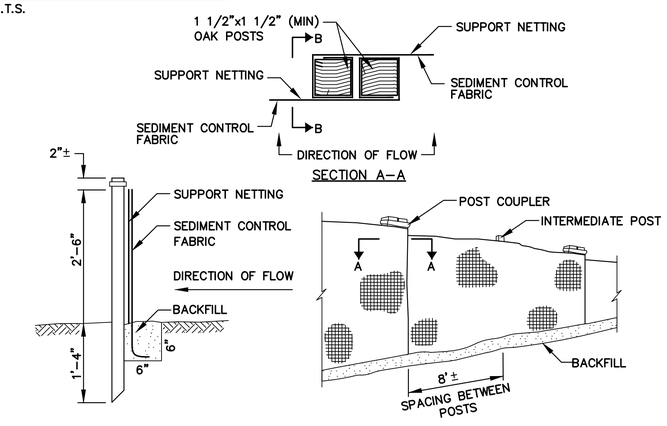

SILT FENCE DETAIL
N.T.S.

Weston&Sampson®
273 Dividend Road, Rocky Hill, CT 06067
(860) 513-1473 (800) SAMPSON
www.westonandsampson.com

No.	Date	Dr.By	Ck.By	App.By	Description
		A	P	P	R O V E D

12-15-15
DATE

REGISTERED PROFESSIONAL ENGINEER

TOWN OF GREENWICH – DEPARTMENT OF PUBLIC WORKS
RITCH AVENUE WEST, GREENWICH, CONNECTICUT
BYRAM PARK POOL REPLACEMENT
EROSION & SEDIMENT CONTROL DETAILS

CADD NO.	SCALE:	CONTRACT:	JOB NO.	DR.BY	DSN.BY	CHK.BY	APP.BY
GREENWICH	NONE	–	2130336	L.E.C.	L.E.C.	J.S.P.	C.B.W.

D1.00
FILE NO.

SHEET – OF –

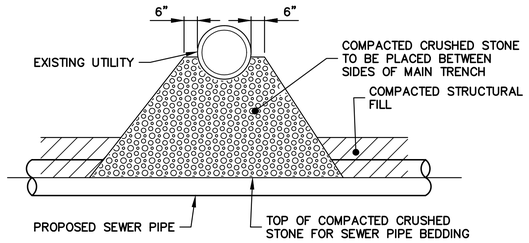

UTILITY CROSSING DETAIL
N.T.S.

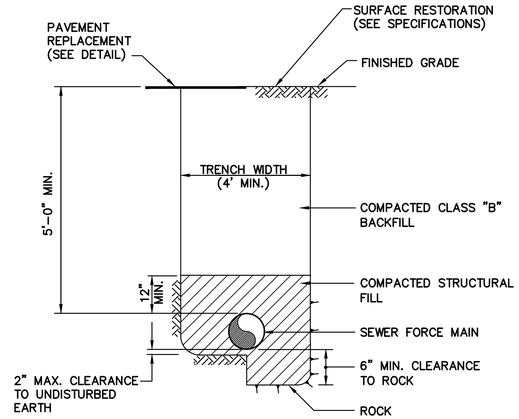

SEWER FORCE MAIN TRENCH DETAIL
N.T.S.

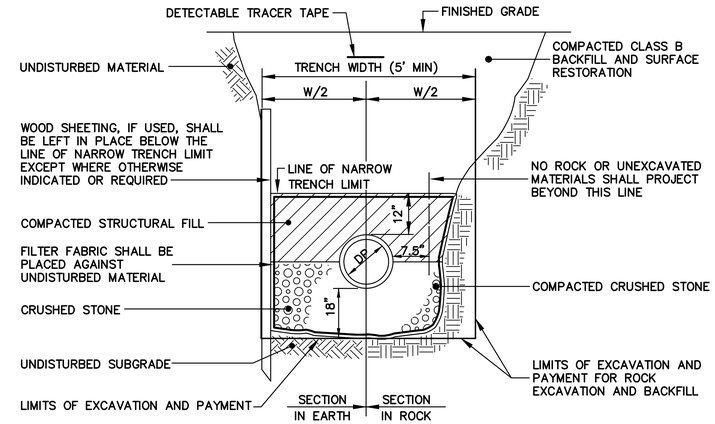

SANITARY GRAVITY SEWER TRENCH DETAIL
N.T.S.

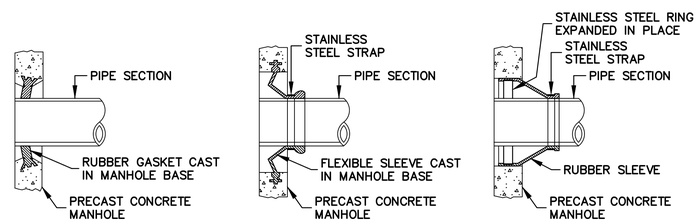

MANHOLE SEAL DETAILS
N.T.S.

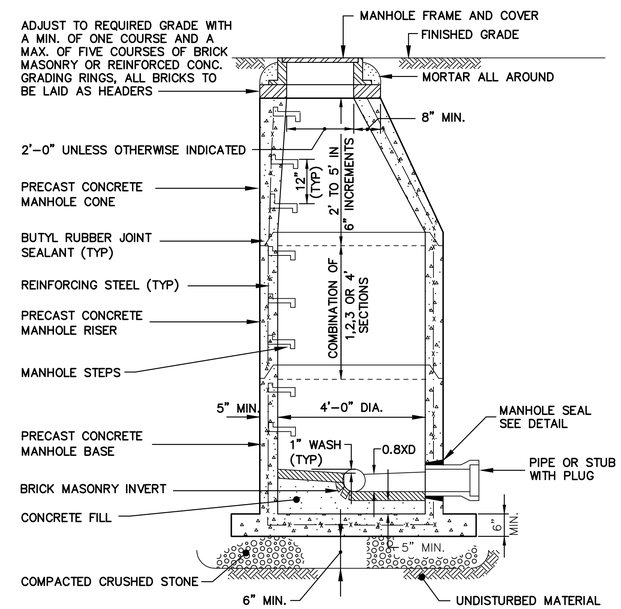

4'-0" DIAMETER PRECAST CONCRETE MANHOLE DETAIL
N.T.S.

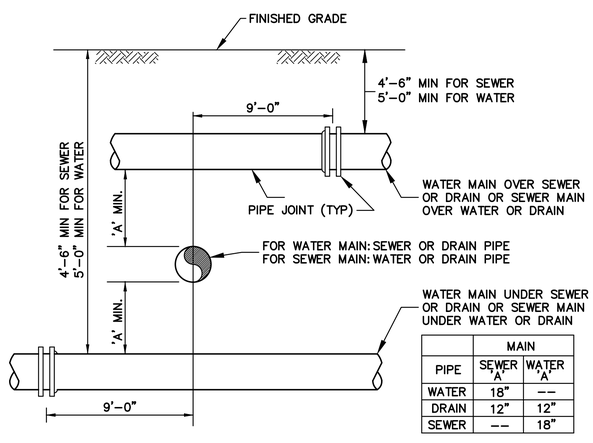

PIPE	MAIN SEWER 'A'	MAIN WATER 'A'
WATER	18"	--
DRAIN	12"	12"
SEWER	--	18"

WATER, SEWER OR DRAIN CROSSING DETAIL
N.T.S.

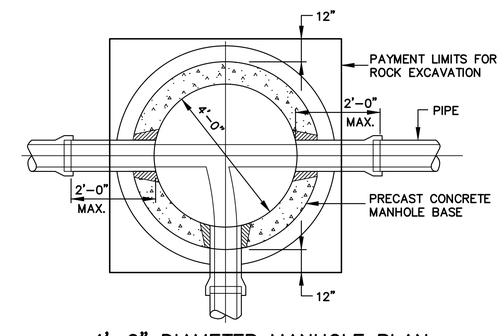

4'-0" DIAMETER MANHOLE PLAN
N.T.S.

CONSTRUCTION DOCUMENTS
12/11/15

Weston&Sampson®
273 Dividend Road, Rocky Hill, CT 06067
(860) 513-1473 (800) SAMPSON
www.westonandsampson.com

No.	Date	Dr.By	Ck.By	App.By	Description	DATE
					APPROVED	12-15-15

REGISTERED PROFESSIONAL ENGINEER

TOWN OF GREENWICH – DEPARTMENT OF PUBLIC WORKS
RITCH AVENUE WEST, GREENWICH, CONNECTICUT
BYRAM PARK POOL REPLACEMENT

SANITARY DETAILS

CADD NO.	SCALE:	CONTRACT:	JOB NO.	DR.BY	DSN.BY	CHK.BY	APP.BY
GREENWICH	NONE	–	2130336	L.E.C.	L.E.C.	J.S.P.	C.B.W.

D1.01

FILE NO.

SHEET – OF –

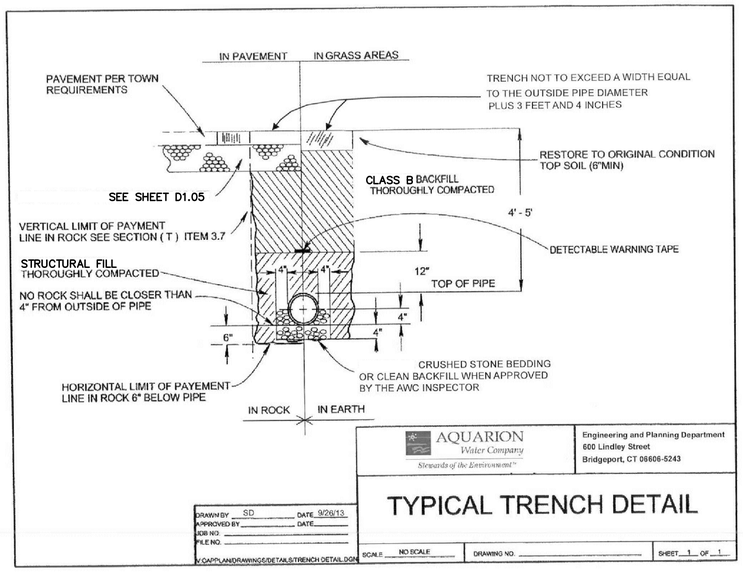

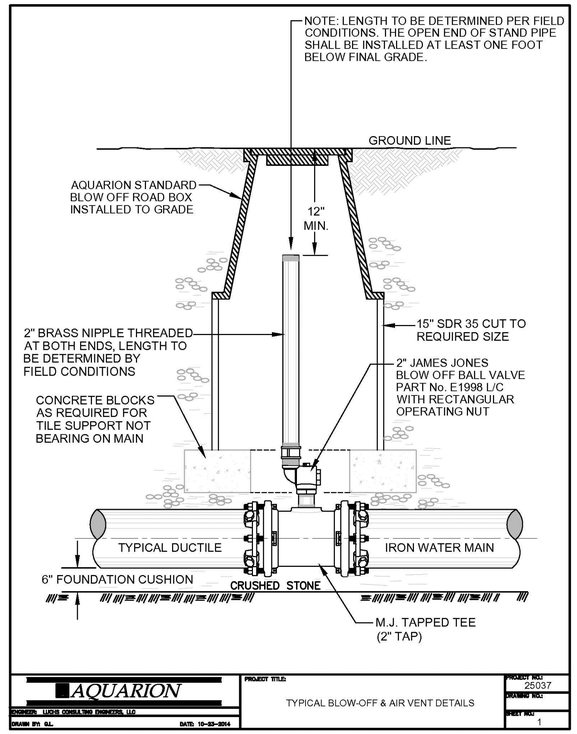

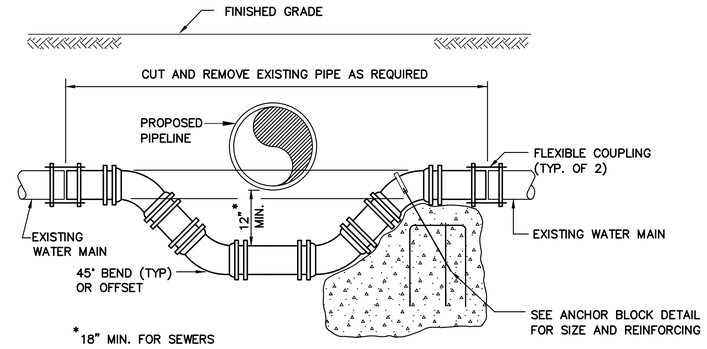

EXISTING WATER MAIN RELOCATION DETAIL

N.T.S.

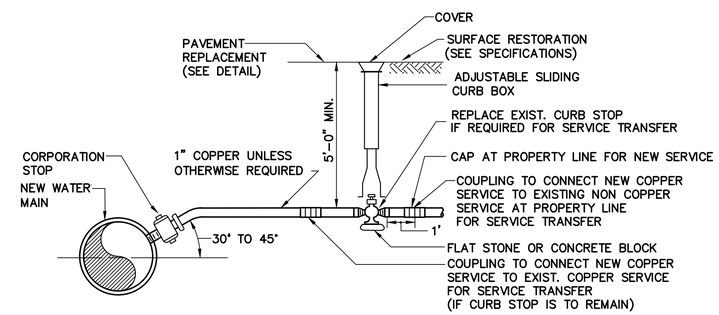

NOTE: PROVIDE SADDLE FOR ALL AC AND PVC MAINS AND ALL 2" OR LARGER STOPS

WATER SERVICE DETAIL

N.T.S.

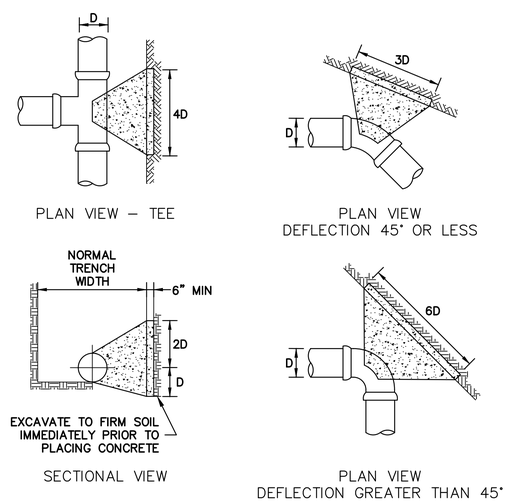

NOTES:
1. WRAP EACH FITTING WITH PLASTIC.

TYPICAL CONCRETE THRUST BLOCK DETAILS

N.T.S.

TABLE 1

REQUIRED LENGTH OF RESTRAINED JOINTS FROM FITTINGS (FEET)

PIPE SIZE	90° BEND	45° BEND OR WYE BRANCH	22 1/2° BEND	11 1/4° BEND	PLUG OR CAP	TEE (BRANCH)
6"	25 (30.5)	10.5 (12.5)	5 (6)	2.5 (3)	43 (64)	34 (51)
8"	33 (40)	13.5 (16.5)	6.5 (8)	3 (4)	55 (82)	47 (70)

NOTES:
1. RESTRAINED LENGTHS LISTED IN PARENTHESES ARE FOR PIPE WRAPPED IN POLYETHYLENE. THE OTHER ASSOCIATED LENGTHS ARE FOR PLAIN UNWRAPPED DUCTILE IRON PIPE.
2. THE CONTRACTOR SHALL USE THIS TABLE IN CONJUNCTION WITH THE APPROPRIATE PIPE SPECIFICATION SECTION.

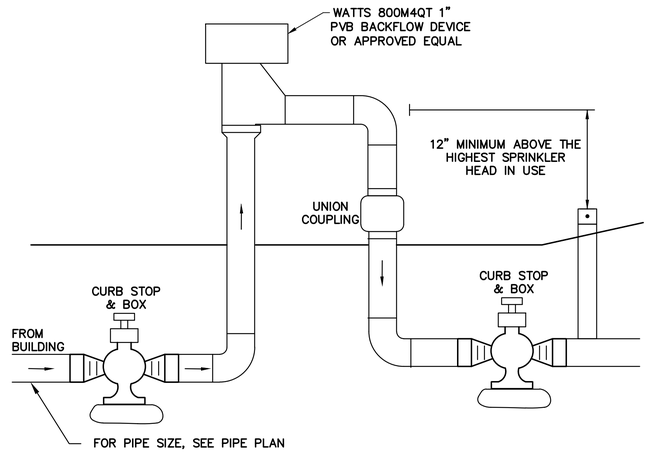

IRRIGATION SYSTEM BACKFLOW PREVENTER

N.T.S.

NOTE:
1. FURNISH & INSTALL DEKERRA 301–GT–C3, NON–INSULATED GREEN BACKFLOW ENCLOSURE OR APPROVED EQUAL IN ACCORDANCE WITH THE MANUFACTURER'S RECOMMENDATIONS. ENCLOSURE SHALL BE CLASS II.

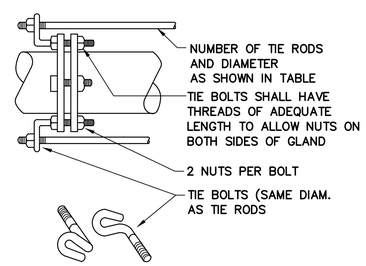

TABLE OF TIE RODS		
PIPE SIZE	TIE ROD	
	NO.	DIA.
6"	2	1/2"
8"	2	5/8"
10"	2	3/4"
12"	4	3/4"

JOINT RESTRAINT DETAIL

N.T.S.

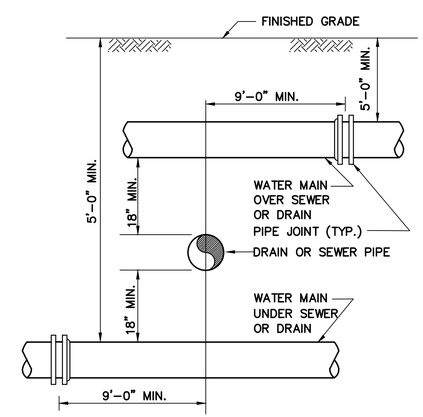

SEWER OR DRAIN CROSSING DETAIL

N.T.S.

CONSTRUCTION DOCUMENTS
12/11/15

Weston&Sampson®
273 Dividend Road, Rocky Hill, CT 06067
(860) 513-1473 (800) SAMPSON
www.westonandsampson.com

No.	Date	Dr.By	Ck.By	App.By	Description	DATE
		A	P	P	R O V E D	12-15-15

REGISTERED PROFESSIONAL ENGINEER

TOWN OF GREENWICH – DEPARTMENT OF PUBLIC WORKS
RITCH AVENUE WEST, GREENWICH, CONNECTICUT
BYRAM PARK POOL REPLACEMENT
WATER DETAILS

DR.BY	DSN.BY	CHK.BY	APP.BY
L.E.C.	L.E.C.	J.S.P.	C.B.W.

CONTRACT: – JOB NO. 21303336 SCALE: NONE CADD NO. GREENWICH

FILE NO. D1.02

SHEET – OF –

MATERIAL LOCATION	DESCRIPTION	AASHTO M43 DESIGNATION	AASHTO M145 DESIGNATION	COMPACTION/DENSITY REQUIREMENT
FILL MATERIAL FROM 18" TO GRADE ABOVE CHAMBERS	ANY SOIL/ROCK MATERIALS, NATIVE SOILS OR PER ENGINEER'S PLANS. CHECK PLANS FOR PAVEMENT SUBGRADE REQUIREMENTS.	N/A	N/A	PER ENGINEER'S REQUIREMENTS REGARDING FORMATION OF SUBGRADE BELOW PAVEMENT STRUCTURE
(C) FILL MATERIAL FOR 6" TO 18" ELEVATION ABOVE CHAMBERS (24" FOR UNPAVED INSTALLATIONS)	GRANULAR WELL-GRADED SOIL/AGGREGATE MIXTURES, <35% FINES.	3, 357, 4, 467, 5, 56, 57, 6, 67, 68, 7, 78, 8, 89, 9, 10	A-1 A-2 A-3	COMPACT IN 6" LIFTS TO A MINIMUM 95% STANDARD PROCTOR DENSITY. ROLLER GROSS VEHICLE WEIGHT NOT TO EXCEED 12,000 LBS. DYNAMIC FORCE NOT TO EXCEED 20,000 LBS.
(B) EMBEDMENT STONE SURROUNDING AND TO A 6" ELEVATION ABOVE CHAMBERS	WASHED ANGULAR STONE WITH THE MAJORITY OF PARTICLES BETWEEN 3/4 - 2 INCH	3, 357, 4, 467, 5, 56, 57	N/A	NO COMPACTION REQUIRED
(A) FOUNDATION STONE BELOW CHAMBERS	WASHED ANGULAR STONE WITH THE MAJORITY OF PARTICLES BETWEEN 3/4 AND 2 INCHES	3, 357, 4, 467, 5, 56, 57	N/A	PLATE COMPACT OR ROLL TO ACHIEVE A 95% STANDARD PROCTOR DENSITY

NOTE:
1. THE LISTED AASHTO DESIGNATIONS ARE FOR GRADATIONS ONLY. THE STONE MUST ALSO BE WASHED CRUSHED ANGULAR. FOR EXAMPLE, THE STONE MUST BE SPECIFIED AS WASHED, CRUSHED, ANGULAR NO. 4 STONE.

TABLE OF ACCEPTABLE FILL MATERIALS

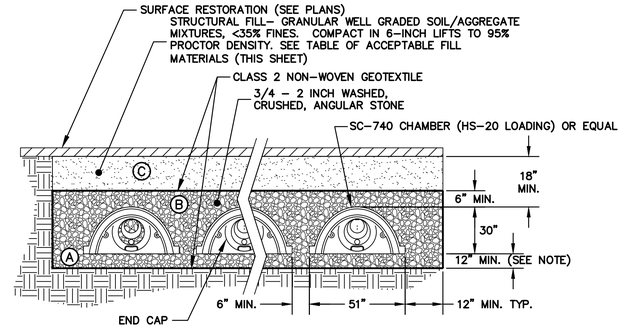

NOTE: IF EXISTING SUBGRADE IS FOUND TO BE FILL, THEN SAID MATERIAL SHALL BE REMOVED IN ITS ENTIRETY AND REPLACED WITH MATERIAL "B" AND THIS DIMENSION SHALL BE INCREASED ACCORDINGLY. IF UNSUITABLE MATERIAL IS EXPOSED AT THE SUBGRADE, CONTACT THE ENGINEER.

INFILTRATION CHAMBER SYSTEM TYPICAL CROSS SECTION DETAIL

N.T.S

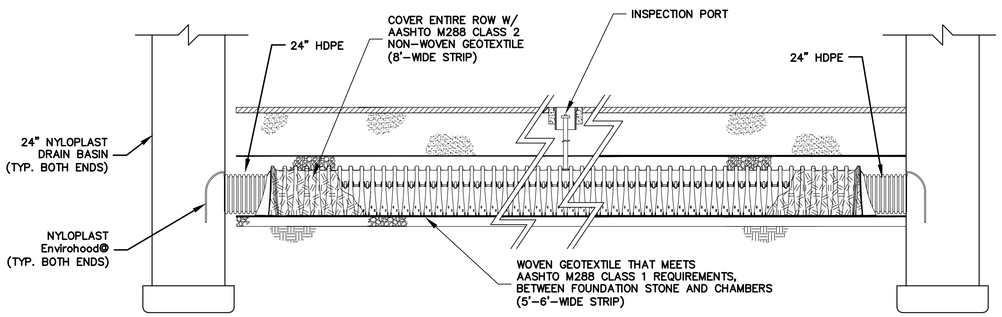

ISOLATOR ROW PROFILE

N.T.S.

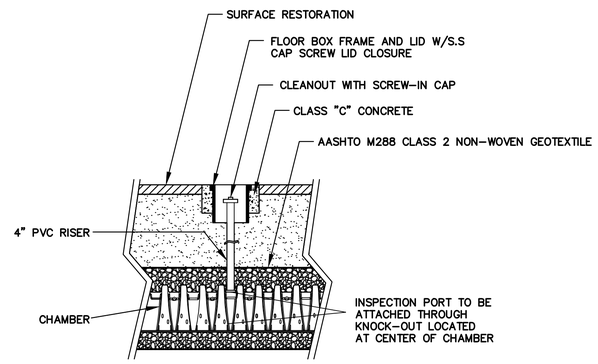

INFILTRATION CHAMBER SYSTEM INSPECTION PORT DETAIL

N.T.S

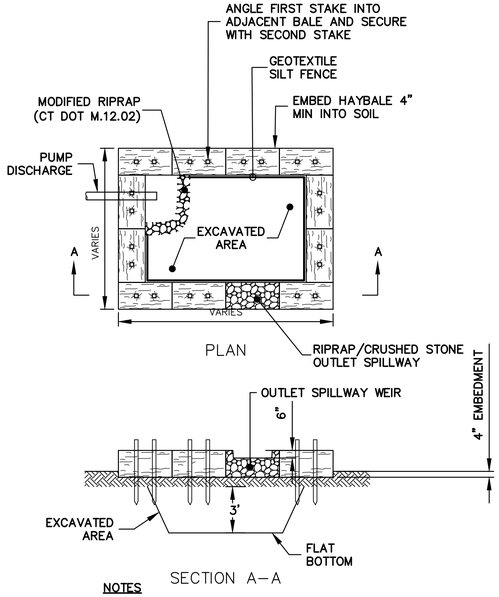

NOTES
1. MINIMUM SIZE OF 16' X 20' BASED ON A DEWATERING RATE OF 20 GPM. IF DEWATERING RATE IS GREATER THAN 20 GPM BASIN SHALL BE RESIZED ACCORDINGLY.

DEWATERING BASIN DETAIL

N.T.S.

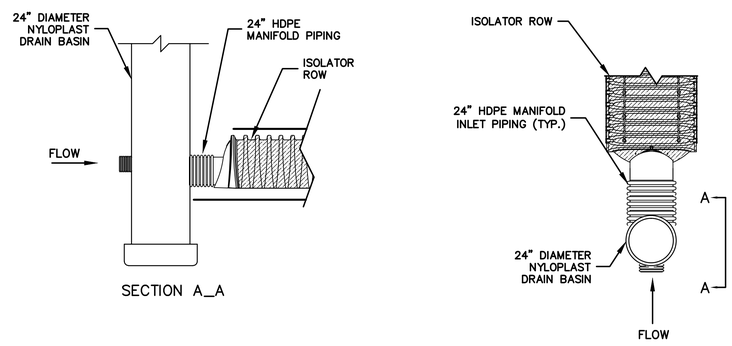

MANHOLE AND MANIFOLD PIPING DETAILS

N.T.S.

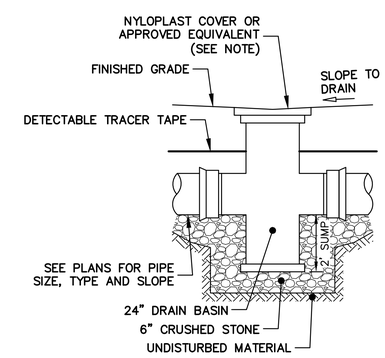

NOTES:
1. FOR DRAIN BASINS WITHIN EXPOSED AGGREGATE CONCRETE, USE NYLOPLAST 15" SQUARE BRONZE (LIGHT-DUTY) COVER OR APPROVED EQUIVALENT.
2. FOR ALL OTHER DRAIN BASINS, USE NYLOPLAST 15" ROUND (LIGHT-DUTY) COVER OR APPROVED EQUIVALENT.

DRAIN BASIN DETAIL

N.T.S.

CONSTRUCTION DOCUMENTS 12/11/15

Weston&Sampson®
273 Dividend Road, Rocky Hill, CT 06067
(860) 513-1473 (800) SAMPSON
www.westonandsampson.com

No.	Date	Dr.By	Ck.By	App.By	Description
		A	P	P	R O V E D

REGISTERED PROFESSIONAL ENGINEER — DATE 12-15-15

TOWN OF GREENWICH - DEPARTMENT OF PUBLIC WORKS
RITCH AVENUE WEST, GREENWICH, CONNECTICUT
BYRAM PARK POOL REPLACEMENT
DRAINAGE DETAILS

CADD NO.	SCALE:	CONTRACT:	JOB NO.	DR.BY	DSN.BY	CHK.BY	APP.BY
GREENWICH	NONE	-	2130336	L.E.C.	L.E.C.	J.S.P.	C.B.W.

FILE NO. D1.03

SHEET — OF —

03/31/14 | SCD No. 507.10

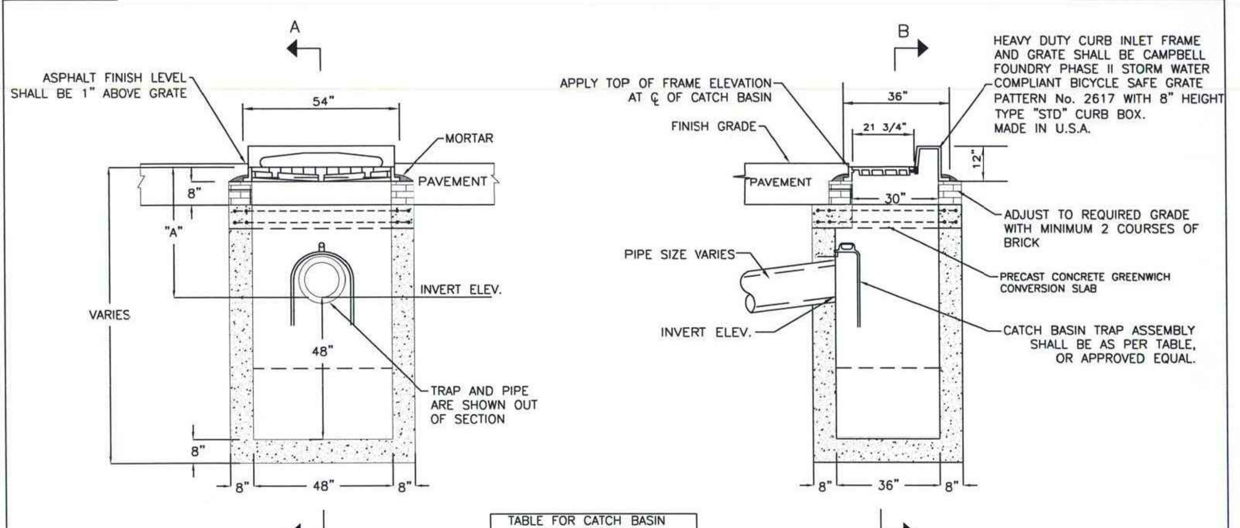

SECTIONAL ELEVATION B–B

SECTIONAL ELEVATION A–A

TABLE FOR CATCH BASIN TRAP ASSEMBLY	
PIPE SIZE	CAMPBELL FOUNDRY PATTERN NUMBER
10"	2563
12"	2563
15"	2564
18"	2565

NOTES:

1. DIMENSION "A" SHALL BE CONSISTENT WITH THE INVERT ELEVATION SHOWN ON CONTRACT DRAWINGS. WHEN NO INVERT ELEVATION IS SPECIFIED, DIMENSION "A" SHALL BE ADEQUATE TO PROVIDE A MINIMUM OF 2'–0" OF COVER OVER PIPE.

STANDARD CONSTRUCTION DETAIL
TYPE "C–1" PRECAST CATCH BASIN
TOWN OF GREENWICH, CONNECTICUT
ENGINEERING DIVISION
DEPARTMENT OF PUBLIC WORKS

SCALE = N.T.S.

03/31/14 | SCD No. 507.14

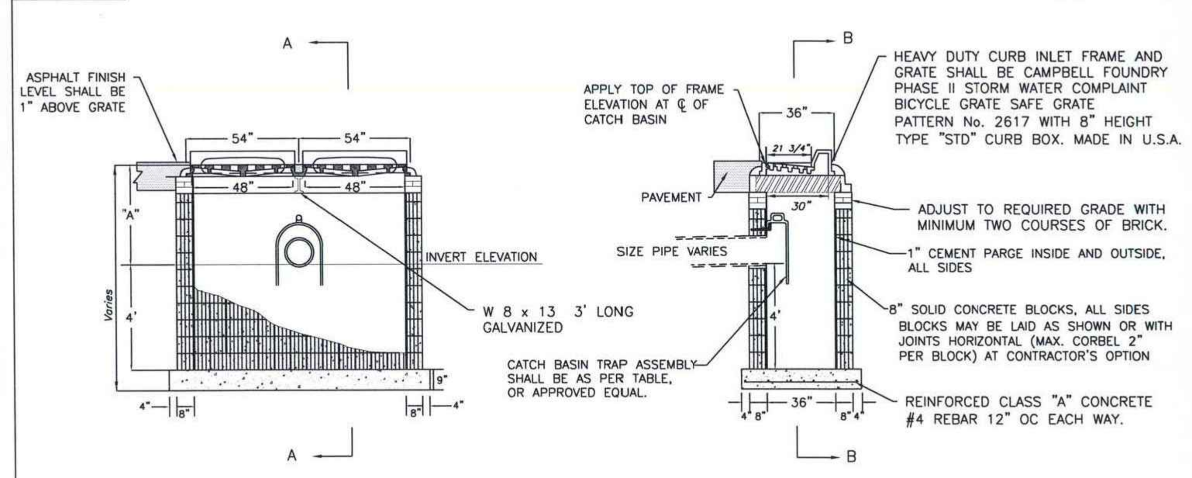

SECTIONAL ELEVATION B–B

SECTIONAL ELEVATION A–A

NOTES:

1. DIMENSION "A" SHALL BE CONSISTENT WITH THE INVERT ELEVATION SHOWN ON CONTRACT DRAWINGS. WHEN NO INVERT ELEVATION IS SPECIFIED DIMENSION "A" SHALL BE ADEQUATE TO PROVIDE A MINIMUM OF 2'–0" COVER OVER PIPE.
2. INCREASE WALL THICKNESS TO 12" FOR THOSE PORTIONS OF WALL AT DEPTHS GREATER THAN 8 FEET. INSIDE DIMENSIONS TO REMAIN THE SAME, FOOTING SIZE TO BE INCREASED 8".
3. W BEAM TO BE INCLUDED IN UNIT PRICE FOR DOUBLE CATCH BASIN. CATCH BASIN MAY BE PRECAST. CONTRACTORS SHALL SUBMIT DETAILED PLANS SHOWING SECTIONS, JOINTS, REINFORCING AND OTHER PERTINENT INFORMATION FOR APPROVAL.

TABLE FOR CATCH BASIN TRAP ASSEMBLY	
PIPE SIZE	CAMPBELL FOUNDRY PATTERN NUMBER
10"	2563
12"	2563
15"	2564
18"	2565

STANDARD CONSTRUCTION DETAIL
DOUBLE TYPE "C–1" CONCRETE BLOCK CATCH BASIN
TOWN OF GREENWICH, CONNECTICUT
ENGINEERING DIVISION
DEPARTMENT OF PUBLIC WORKS

SCALE = N.T.S.

03/31/14 | SCD No. 507.40

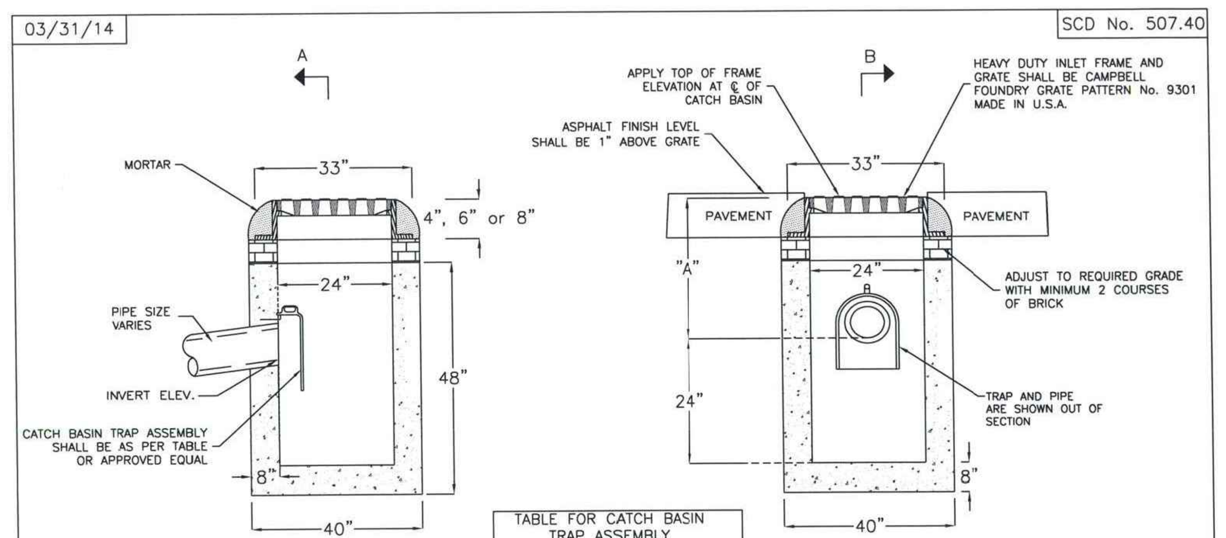

SECTIONAL ELEVATION B–B

SECTIONAL ELEVATION A–A

TABLE FOR CATCH BASIN TRAP ASSEMBLY	
PIPE SIZE	CAMPBELL FOUNDRY PATTERN NUMBER
10"	2563
12"	2563
15"	2564
18"	2565

NOTES:

1. DIMENSION "A" SHALL BE CONSISTENT WITH THE INVERT ELEVATION SHOWN ON CONTRACT DRAWINGS. WHEN NO INVERT ELEVATION IS SPECIFIED, DIMENSION "A" SHALL BE ADEQUATE TO PROVIDE A MINIMUM OF 2'–0" OF COVER OVER PIPE.
2. THICKNESS OF FRAME (4", 6", OR 8") TO BE DETERMINED IN THE FIELD ACCORDING WITH FINISH GRADE ELEVATION.
3. 8" WALLS PRECAST CONCRETE UNIT AS MANUFACTURED BY PRECAST CONCRETE SALES CO. UPON REQUEST OR APPROVED EQUAL.

STANDARD CONSTRUCTION DETAIL
TYPE "C–4" PRECAST CATCH BASIN
TOWN OF GREENWICH, CONNECTICUT
ENGINEERING DIVISION
DEPARTMENT OF PUBLIC WORKS

SCALE = N.T.S.

04/XX/14 | SCD No. 507.60

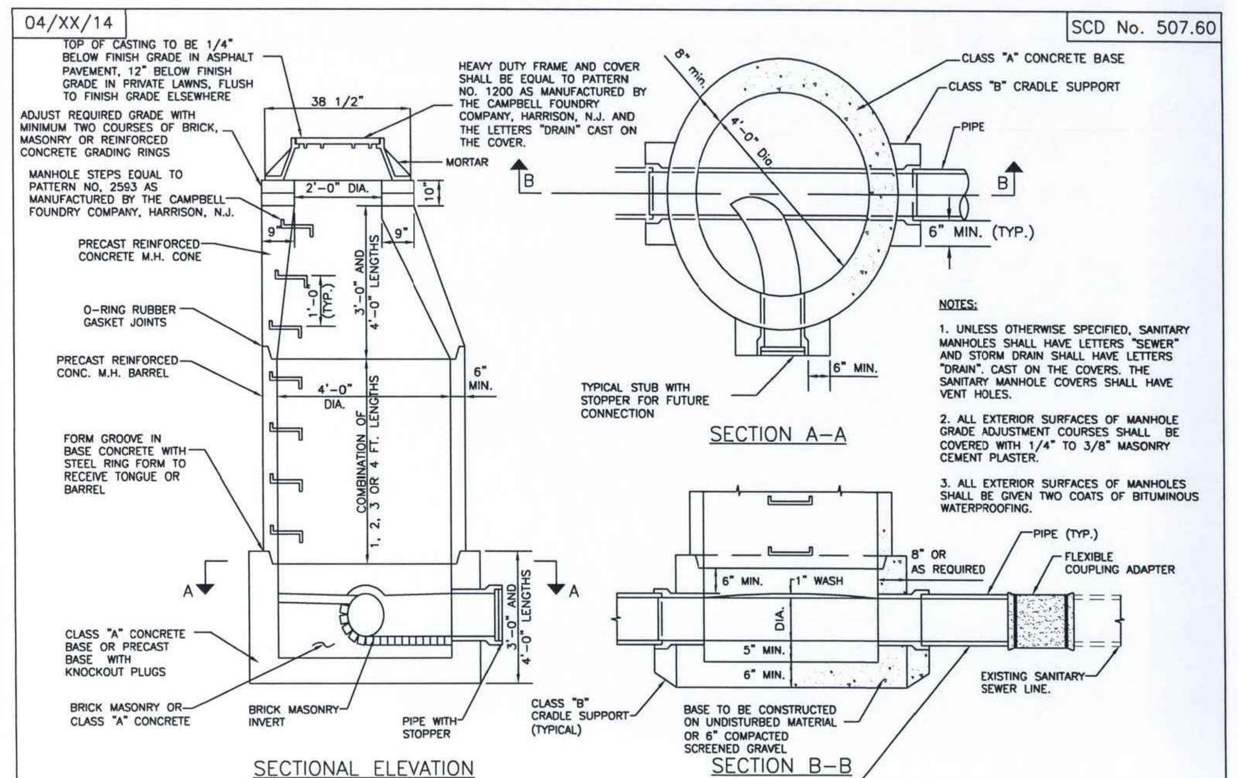

SECTION A–A

SECTIONAL ELEVATION

SECTION B–B

NOTES:

1. UNLESS OTHERWISE SPECIFIED, SANITARY MANHOLES SHALL HAVE LETTERS "SEWER" AND STORM DRAIN SHALL HAVE LETTERS "DRAIN". CAST ON THE COVERS. THE SANITARY MANHOLE COVERS SHALL HAVE VENT HOLES.
2. ALL EXTERIOR SURFACES OF MANHOLE GRADE ADJUSTMENT COURSES SHALL BE COVERED WITH 1/4" TO 3/8" MASONRY CEMENT PLASTER.
3. ALL EXTERIOR SURFACES OF MANHOLES SHALL BE GIVEN TWO COATS OF BITUMINOUS WATERPROOFING.

FOR SANITARY MANHOLES CONNECT PVC PIPE WITH PROPOSED SANITARY MANHOLE. THE COST OF CONNECTING THE EXISTING SANITARY SEWER LINE TO THE PROPOSED MANHOLE SHALL BE INCLUDED IN THE CONTRACT UNIT PRICE BID FOR THE MANHOLE.

STANDARD CONSTRUCTION DETAIL
TYPE P–2 PRECAST MANHOLE
TOWN OF GREENWICH, CONNECTICUT
ENGINEERING DIVISION
DEPARTMENT OF PUBLIC WORKS

SCALE = N.T.S.

03/31/14 | SCD No. 507.20

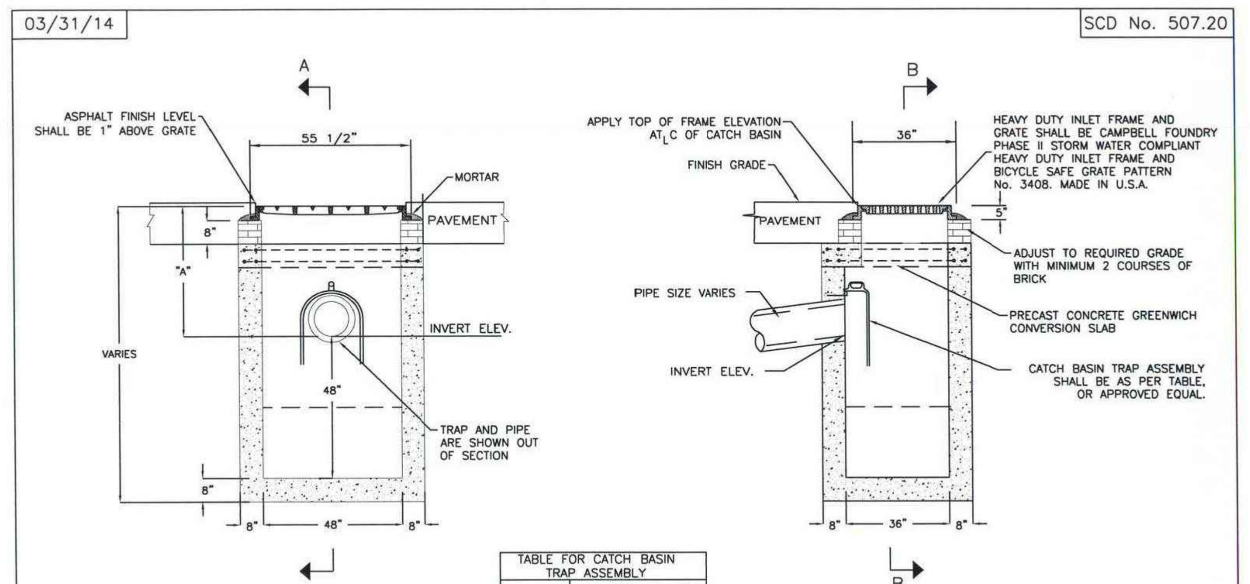

SECTIONAL ELEVATION B–B

SECTIONAL ELEVATION A–A

TABLE FOR CATCH BASIN TRAP ASSEMBLY	
PIPE SIZE	CAMPBELL FOUNDRY PATTERN NUMBER
10"	2563
12"	2563
15"	2564
18"	2565

NOTES:

1. DIMENSION "A" SHALL BE CONSISTENT WITH THE INVERT ELEVATION SHOWN ON CONTRACT DRAWINGS. WHEN NO INVERT ELEVATION IS SPECIFIED, DIMENSION "A" SHALL BE ADEQUATE TO PROVIDE A MINIMUM OF 2'–0" OF COVER OVER PIPE.

STANDARD CONSTRUCTION DETAIL
TYPE "C–1" PRECAST CATCH BASIN
TOWN OF GREENWICH, CONNECTICUT
ENGINEERING DIVISION
DEPARTMENT OF PUBLIC WORKS

SCALE = N.T.S.

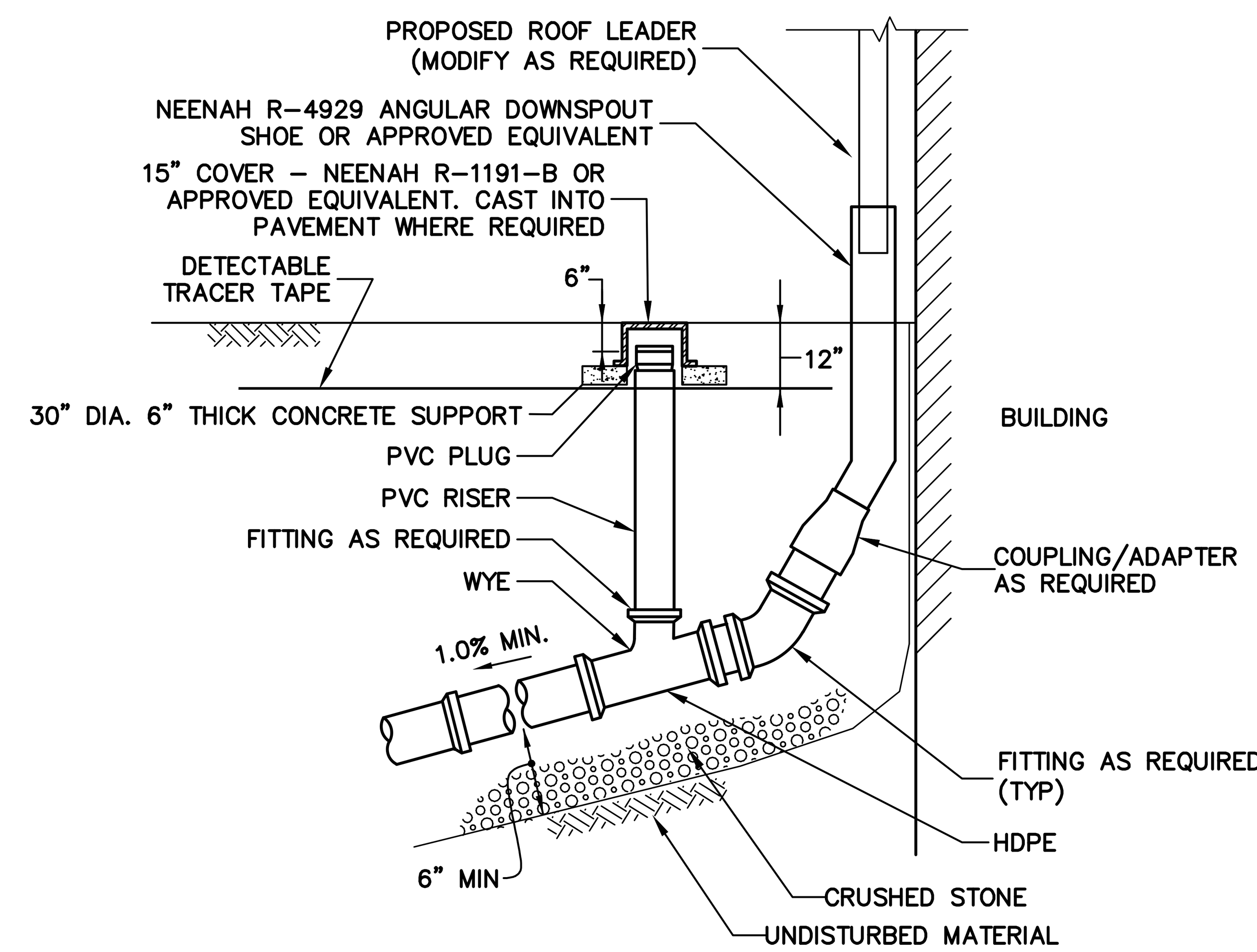

NOTES:
1. DETECTABLE TRACER TAPE TO BE INSTALLED FOR THE ENTIRE LENGTH OF THE ROOF LEADER EXTENSION.
2. PROVIDE FITTINGS, COUPLINGS AND ADAPTERS AS REQUIRED.
3. SEE PLAN FOR ROOF LEADER LOCATIONS

ROOF LEADER CONNECTION DETAIL

N.T.S.

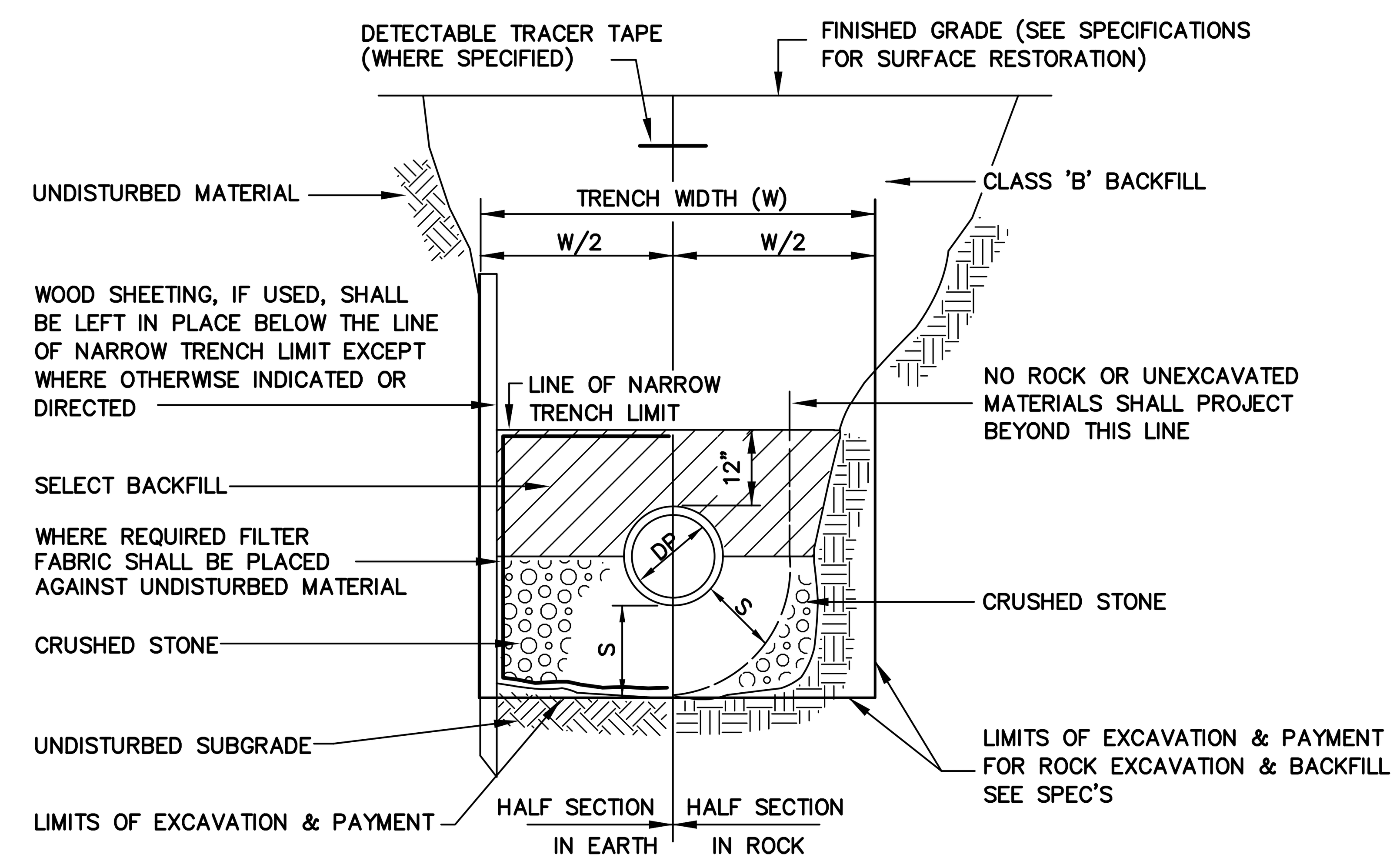

NOTE:
FOR W, DP, & S, SEE TABLE A

STORM DRAIN TRENCH DETAIL

N.T.S.

DEPTH TO INVERT	DIAMETER OF PIPE (DP)	MAXIMUM TRENCH WIDTH BELOW LINE OF NARROW TRENCH LIMIT (SHEETED OR UNSHEETED) (W)	MINIMUM CLEARANCE (S)
0–12'	TO 18"	5'	6"
0–12'	21"–24"	5'	7–1/2"
OVER 12'	TO 18"	7'	6"
OVER 12'	21"–24"	7'	7–1/2"

TABLE A

CONSTRUCTION DOCUMENTS
12/11/15

Weston&Sampson®
273 Dividend Road, Rocky Hill, CT 06067
(860) 513-1473 (800) SAMPSON
www.westonandsampson.com

No.	Date	Dr.By	Ck.By	App.By	Description

APPROVED
12–15–15
DATE
REGISTERED PROFESSIONAL ENGINEER

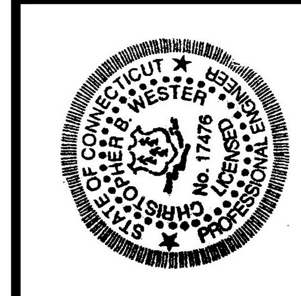

TOWN OF GREENWICH – DEPARTMENT OF PUBLIC WORKS
RITCH AVENUE WEST, GREENWICH, CONNECTICUT

BYRAM PARK POOL REPLACEMENT

DRAINAGE DETAILS

CADD NO.	SCALE:	CONTRACT:	JOB NO.	DR.BY	DSN.BY	CHK.BY	APP.BY
GREENWICH	NONE	–	2130336	L.E.C.	L.E.C.	J.S.P.	C.B.W.

D1.04

FILE NO.

SHEET – OF –

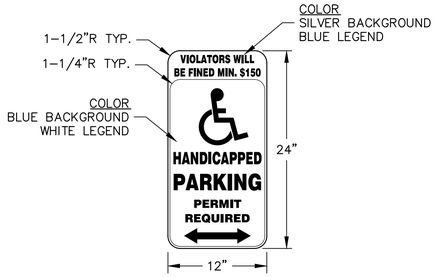

NOTE: INSTALL ONE POST MOUNTED ACCESSIBLE SIGN PER ACCESSIBLE PARKING STALL.

ACCESSIBLE PARKING SIGN

N.T.S.

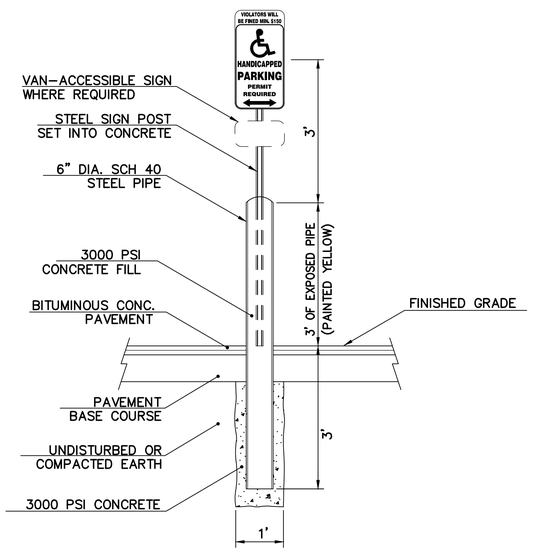

NOTE:
1. LOCATE CENTER OF 6" STEEL PIPE 1' FROM EDGE OF PARKING.
2. ALL SIGNS TO BE CENTERED ON PARKING SPACE.

ACCESSIBLE SIGN AND POST DETAIL

N.T.S

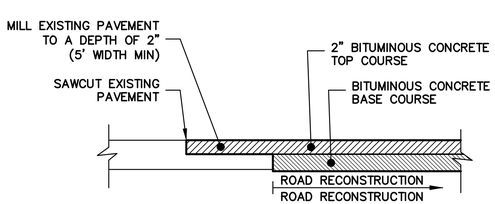

NOTES:
1. CUT KEYWAY AT ENDS OF ALL PAVING.
2. TACK COAT BETWEEN EXISTING AND PROPOSED PAVEMENT.

KEYWAY DETAIL

N.T.S.

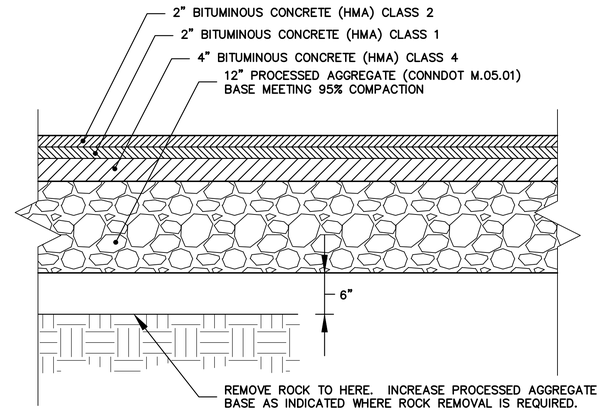

NOTES:

1. CONTRACTOR SHALL MAINTAIN POSITIVE SURFACE DRAINAGE (SEE GRADING PLANS).
2. ENGINEERING DIVISION RESERVES THE RIGHT TO MODIFY THE PARKING LOT LAYOUT IF, IT DEEMS IT NECESSARY.
3. PRIOR TO PLACING 12" PROCESSED AGGREGATE BASE, SUBGRADE SHALL BE CERTIFIED AS MEETING CONN DOT SPECIFICATIONS.
4. ALL WORK SHALL TO CONFORM TO DEPARTMENT OF PUBLIC WORKS STANDARDS, AND SHALL BE CERTIFIED BY A REGISTERED PROFESSIONAL ENGINEER OR RESIDENT REPRESENTATIVE.
5. 6" CURB REVEAL MATCHING THE CURB TYPE IN THE AREA OR AS DIRECTED BY THE ENGINEERING DIVISION OR HIGHWAY DIVISION.

BITUMINOUS CONCRETE PAVEMENT SECTION

NOT TO SCALE

03/31/14 | SCD No. 406.12

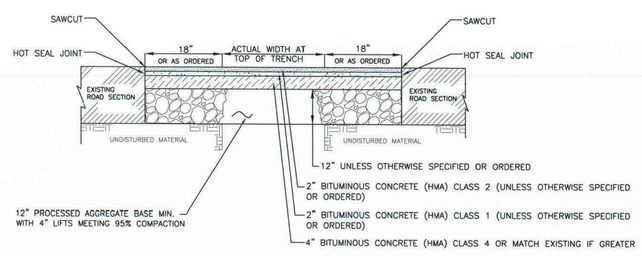

BITUMINOUS CONCRETE (HMA) PAVEMENT RECONSTRUCTION

NOTE:
PAVING WILL BE CURB TO CURB FOR LENGTH OF PROJECT WHEN ROADWAY HAS BEEN PAVED WITHIN THE LAST 5 YEARS OR HAS A PCI VALUE GREATER THAN OR EQUAL TO 80

SCALE = N.T.S.

STANDARD CONSTRUCTION DETAIL
BITUMINOUS CONCRETE (HMA) PAVEMENT RECONSTRUCTION
TOWN OF GREENWICH, CONNECTICUT
ENGINEERING DIVISION
DEPARTMENT OF PUBLIC WORKS

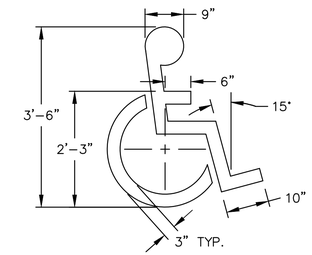

ACCESSIBLE PARKING SPACE SYMBOL

N.T.S.

CONSTRUCTION DOCUMENTS
12/11/15

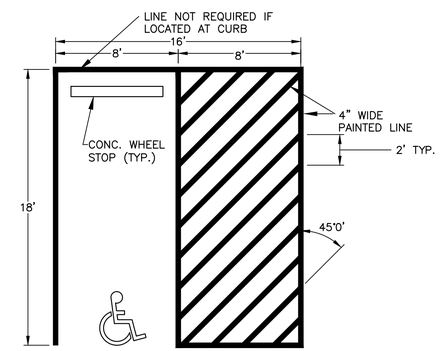

VAN-ACCESSIBLE PARKING SPACE DETAIL

NOT TO SCALE

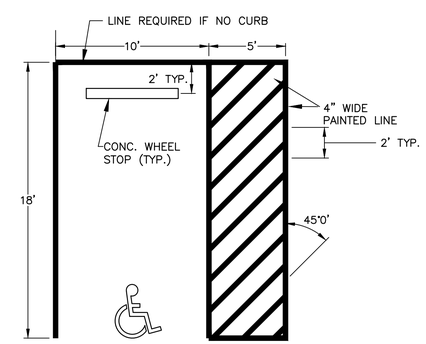

STANDARD ACCESSIBLE PARKING SPACE DETAIL

NOT TO SCALE

Weston&Sampson®
273 Dividend Road, Rocky Hill, CT 06067
(860) 513-1473 (800) SAMPSON
www.westonandsampson.com

No.	Date	Dr.By	Ck.By	App.By	Description
					APPROVED

REGISTERED PROFESSIONAL ENGINEER — DATE 12-15-15

TOWN OF GREENWICH – DEPARTMENT OF PUBLIC WORKS
RITCH AVENUE WEST, GREENWICH, CONNECTICUT
BYRAM PARK POOL REPLACEMENT
PARKING AREA DETAILS

CADD NO. GREENWICH | SCALE: NONE | CONTRACT: – | JOB NO. 2130336 | DR.BY L.E.C. | DSN.BY DETAILS | CHK.BY J.S.P. | APP.BY C.B.W.

D1.05 — FILE NO.

SHEET – OF –

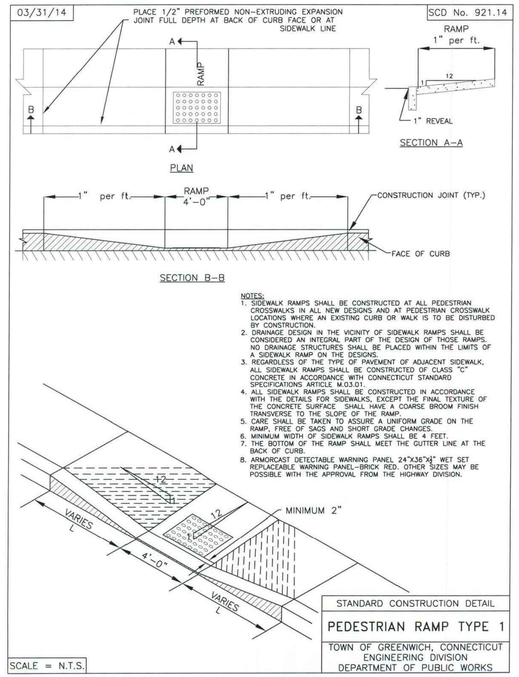

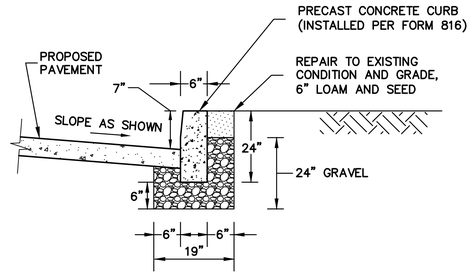

PRECAST CONCRETE CURB DETAIL

N.T.S.

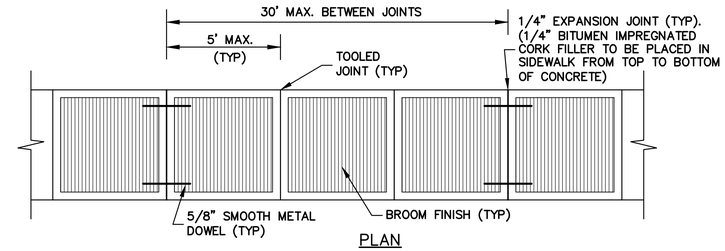

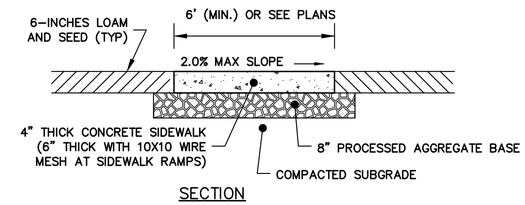

CONCRETE SIDEWALK DETAIL

N.T.S.

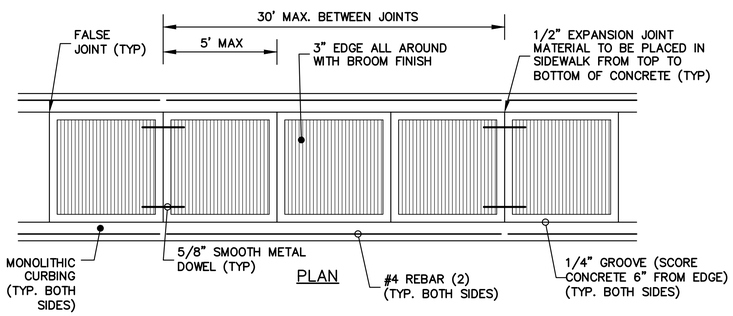

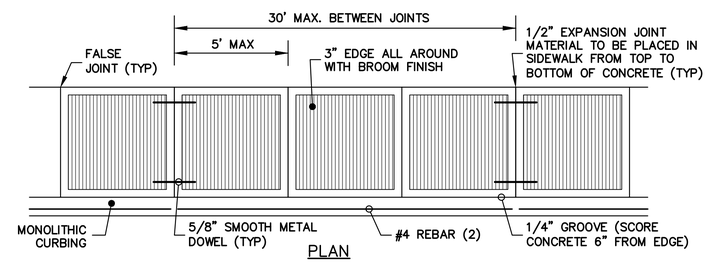

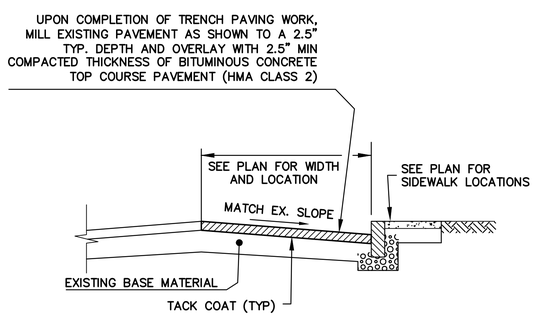

TYPICAL MILLING AND OVERLAY DETAIL

N.T.S.

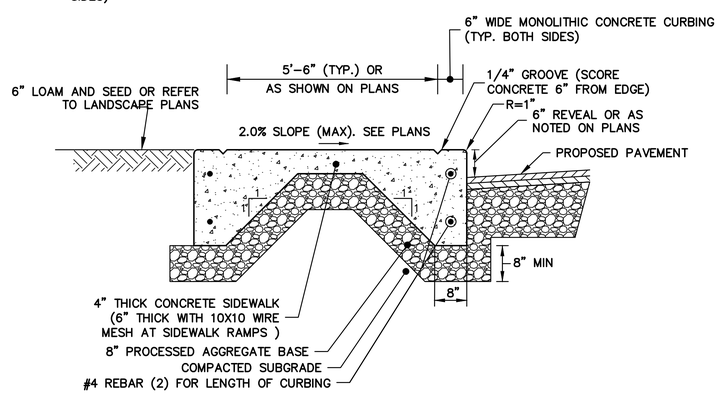

NOTE:
1. PROVIDE EXPANSION JOINTS 30' O–C (MAX).
2. TOTAL DEPTH OF MONOLITHIC CURB TO BE 20".

SECTION

SIDEWALK AND DOUBLE MONOLITHIC CURB DETAIL

N.T.S.

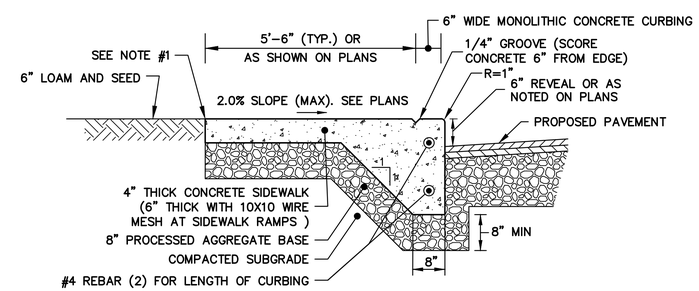

NOTE:
1. PROVIDE EXPANSION JOINTS 30' O–C (MAX). PROVIDE EXPANSION JOINTS WHERE BACK OF WALK ABUTS EXISTING WALLS.
2. TOTAL DEPTH OF MONOLITHIC CURB TO BE 20".
3. INSTALL WHERE SIDEWALK IS IMMEDIATELY ADJACENT TO DRIVEWAY/PARKING AREA.

SECTION

SIDEWALK AND MONOLITHIC CURB DETAIL

N.T.S.

CONSTRUCTION DOCUMENTS
12/11/15

Weston&Sampson®
273 Dividend Road, Rocky Hill, CT 06067
(860) 513-1473 (800) SAMPSON
www.westonandsampson.com

No.	Date	Dr.By	Ck.By	App.By	Description
		A	P	P	R O V E D

12-15-15
DATE
REGISTERED PROFESSIONAL ENGINEER

TOWN OF GREENWICH – DEPARTMENT OF PUBLIC WORKS
RITCH AVENUE WEST, GREENWICH, CONNECTICUT
BYRAM PARK POOL REPLACEMENT
MISCELLANEOUS DETAILS

CADD NO.	SCALE:	CONTRACT:	JOB NO.	DR.BY	DSN.BY	CHK.BY	APP.BY
GREENWICH	NONE	–	2130336	L.E.C.	L.E.C.	J.S.P.	C.B.W.

D1.06
FILE NO.
SHEET – OF –

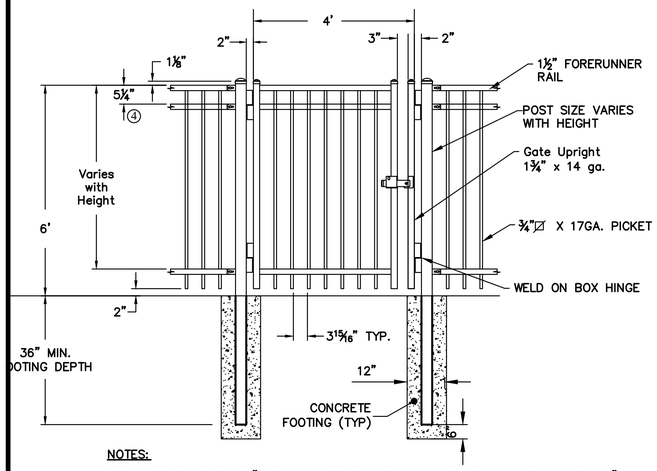

NOTES:
1. GATE TO BE BLACK "COMMERCIAL CLASSIC PREMIER ORNAMENTAL FENCE GATE" AS MANUFACTURED BY MASTER HALCO, OR APPROVED EQUAL.
2. GATE TO BE INSTALLED PER MANUFACTURERS SPECIFICATIONS

METAL PICKET FENCE GATE
N.T.S.

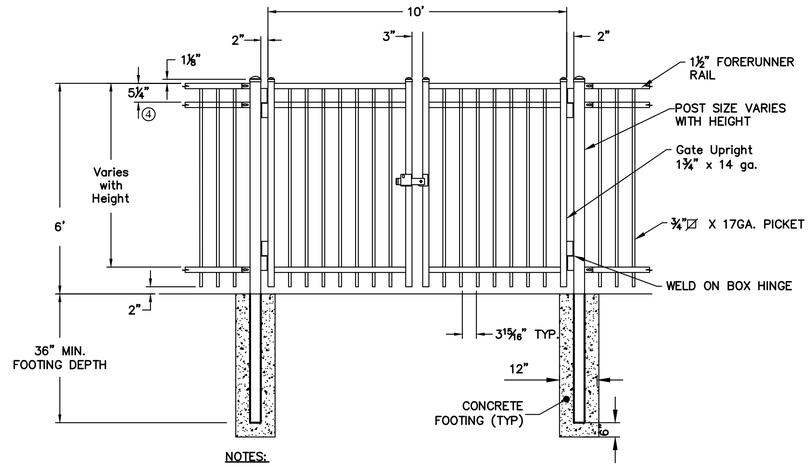

NOTES:
1. GATE TO BE BLACK "COMMERCIAL CLASSIC PREMIER ORNAMENTAL FENCE GATE" AS MANUFACTURED BY MASTER HALCO, OR APPROVED EQUAL.
2. GATE TO BE INSTALLED PER MANUFACTURERS SPECIFICATIONS

DOUBLE-SWING METAL PICKET FENCE GATE
N.T.S.

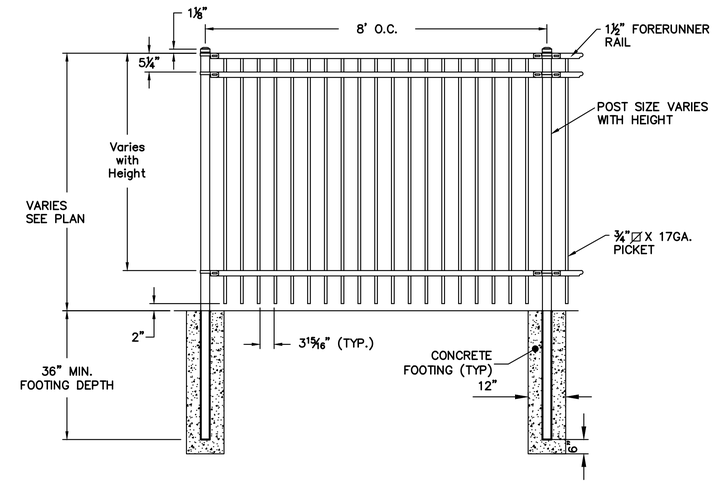

NOTES:
1. FENCE TO BE BLACK,"COMMERCIAL CLASSIC PREMIER ORNAMENTAL FENCE" SYSTEM AS MANUFACTURED BY MASTER HALCO. OR EQUAL.
2. FENCE TO BE INSTALLED PER MANUFACTURERS SPECIFICATIONS

METAL PICKET FENCE DETAIL
N.T.S.

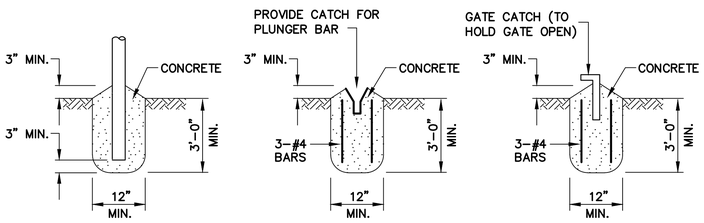

POST DETAIL
N.T.S.

GATE KEEPER DETAIL
N.T.S.

GATE CATCH DETAIL
N.T.S.

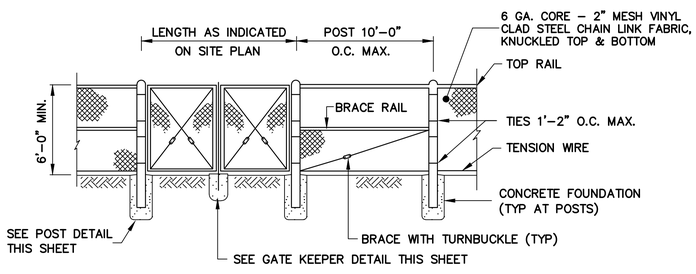

NOTES:
1. ALL FENCE PIPE SHALL BE SCH. 40, BLACK VINYL CLAD HOT DIP GALV. STEEL PIPE.
2. ALL CLAMPS, TIES, POST TOPS, BANDS, POSTS, ETC. SHALL BE VINYL CLAD TO MATCH FABRIC.

TYPICAL CHAIN LINK GATE DETAIL
N.T.S.

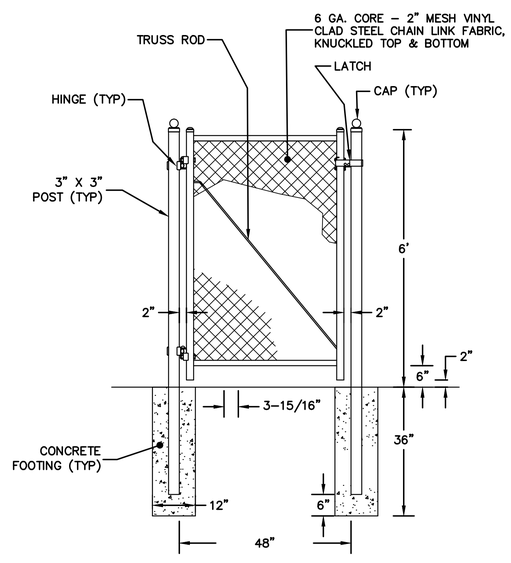

NOTES:
1. FENCE TO BE INSTALLED PER MANUFACTURERS SPECIFICATIONS.
2. SEE CHAIN LINK FENCE DETAIL FOR ADDITIONAL INFORMATION.

PEDESTRIAN GATE DETAIL
N.T.S.

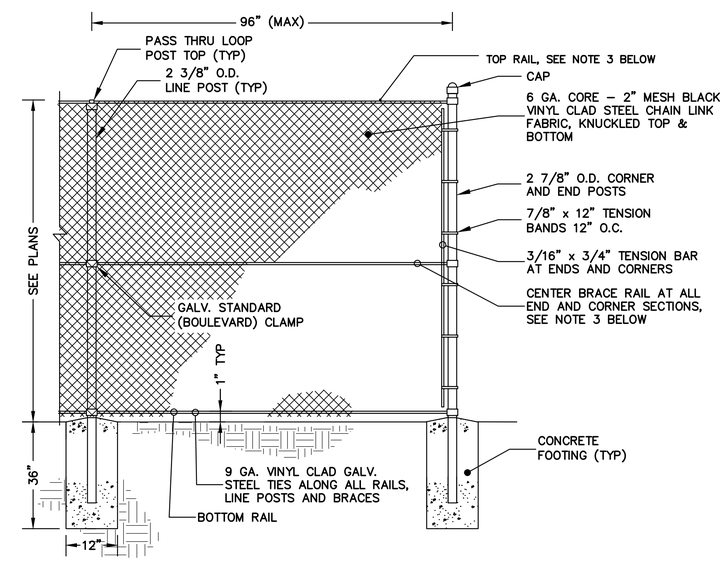

NOTES:
1. ALL FENCE PIPE SHALL BE SCH. 40, BLACK VINYL CLAD HOT DIP GALV. STEEL PIPE.
2. ALL LINE POSTS SHALL BE INSTALLED EQUALLY SPACED BETWEEN END & CORNER POSTS.
3. ALL RAILS SHALL BE 1.66" O.D. PIPE
4. ALL CLAMPS, TIES, POST TOPS, BANDS, POSTS, ETC. SHALL BE VINYL CLAD TO MATCH FABRIC.

CHAIN LINK FENCE DETAIL
N.T.S.

CONSTRUCTION DOCUMENTS
12/11/15

Weston&Sampson®
273 Dividend Road, Rocky Hill, CT 06067
(860) 513-1473 (800) SAMPSON
www.westonandsampson.com

No.	Date	Dr.By	Ck.By	App.By	Description	DATE
		A	P	P	R O V E D	12-15-15

REGISTERED PROFESSIONAL ENGINEER

TOWN OF GREENWICH – DEPARTMENT OF PUBLIC WORKS
RITCH AVENUE WEST, GREENWICH, CONNECTICUT

BYRAM PARK POOL REPLACEMENT

MISCELLANEOUS DETAILS

CADD NO.	SCALE:	CONTRACT:	JOB NO.	DR.BY	DSN.BY	CHK.BY	APP.BY
GREENWICH	NONE	–	2130336	L.E.C.	L.E.C.	J.S.P.	C.B.W.

D1.07

FILE NO.

SHEET – OF –

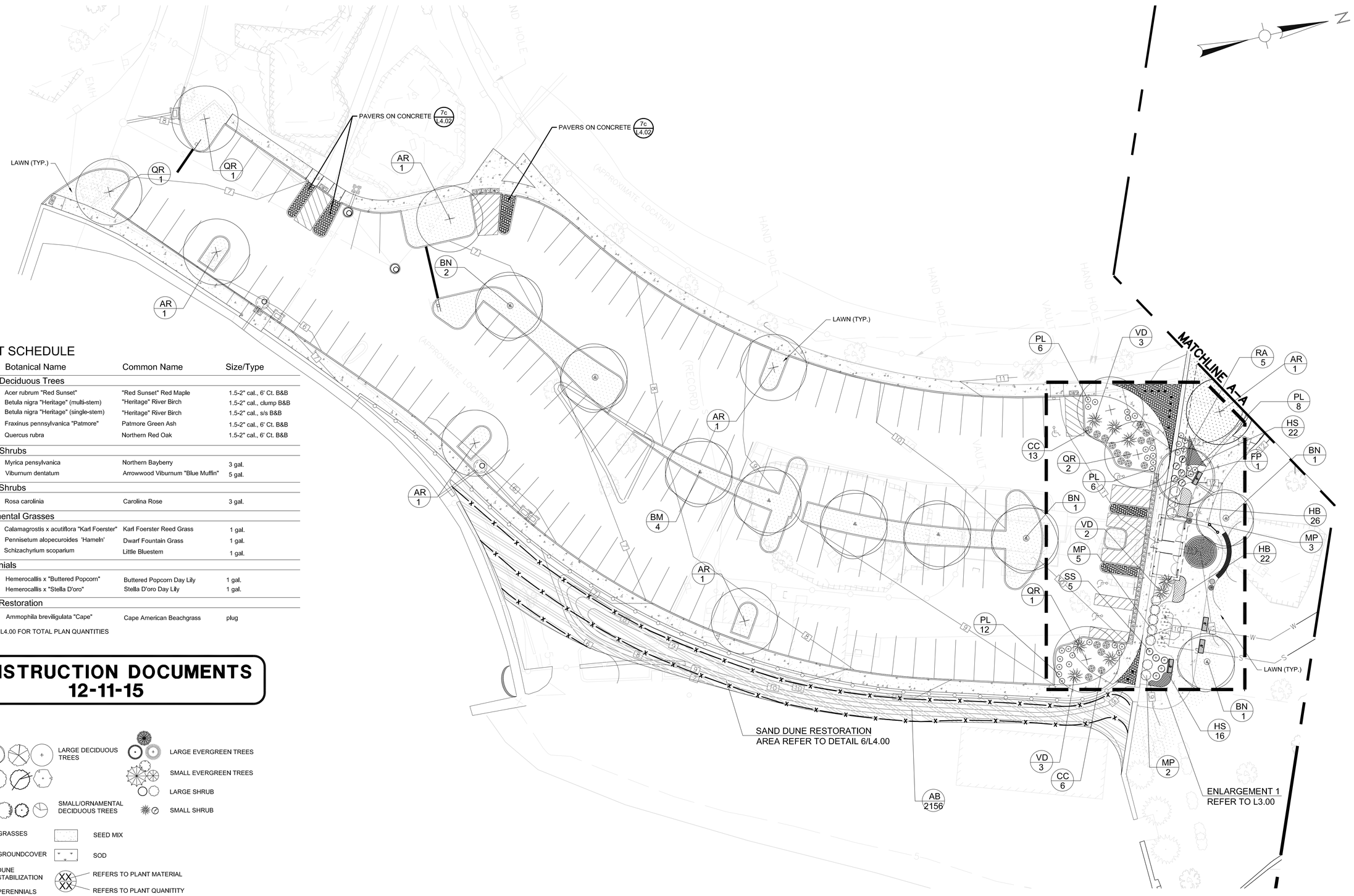

PLANT SCHEDULE

Symbol	Botanical Name	Common Name	Size/Type
Large Deciduous Trees			
AR	Acer rubrum "Red Sunset"	"Red Sunset" Red Maple	1.5-2" cal., 6' Ct. B&B
BM	Betula nigra "Heritage" (multi-stem)	"Heritage" River Birch	1.5-2" cal., clump B&B
BN	Betula nigra "Heritage" (single-stem)	"Heritage" River Birch	1.5-2" cal., s/s B&B
FP	Fraxinus pennsylvanica "Patmore"	Patmore Green Ash	1.5-2" cal., 6' Ct. B&B
QR	Quercus rubra	Northern Red Oak	1.5-2" cal., 6' Ct. B&B
Large Shrubs			
MP	Myrica pensylvanica	Northern Bayberry	3 gal.
VD	Viburnum dentatum	Arrowwood Viburnum "Blue Muffin"	5 gal.
Small Shrubs			
RA	Rosa carolinia	Carolina Rose	3 gal.
Ornamental Grasses			
CC	Calamagrostis x acutiflora "Karl Foerster"	Karl Foerster Reed Grass	1 gal.
PL	Pennisetum alopecuroides 'Hameln'	Dwarf Fountain Grass	1 gal.
SS	Schizachyrium scoparium	Little Bluestem	1 gal.
Perennials			
HB	Hemerocallis x "Buttered Popcorn"	Buttered Popcorn Day Lily	1 gal.
HS	Hemerocallis x "Stella D'oro"	Stella D'oro Day Lily	1 gal.
Dune Restoration			
AB	Ammophila breviligulata "Cape"	Cape American Beachgrass	plug

*REFER TO L4.00 FOR TOTAL PLAN QUANTITIES

CONSTRUCTION DOCUMENTS
12-11-15

LEGEND:

- LARGE DECIDUOUS TREES
- LARGE EVERGREEN TREES
- SMALL EVERGREEN TREES
- LARGE SHRUB
- SMALL/ORNAMENTAL DECIDUOUS TREES
- SMALL SHRUB
- GRASSES
- SEED MIX
- GROUNDCOVER
- SOD
- DUNE STABILIZATION
- REFERS TO PLANT MATERIAL
- REFERS TO PLANT QUANITITY
- PERENNIALS

PLAN
SCALE: 1"=20'
0 20' 40' 60'

Weston&Sampson®
273 Dividend Road, Rocky Hill, CT 06067
(860) 513-1473 (800) SAMPSON
www.westonandsampson.com

No.	Date	Dr.By	Ck.By	App.By	Description

APPROVED

12-11-2015
DATE

REGISTERED LANDSCAPE ARCHITECT

STATE OF CONNECTICUT LICENSED LANDSCAPE ARCHITECT

TOWN OF GREENWICH – DEPARTMENT OF PUBLIC WORKS
RITCH AVENUE WEST, GREENWICH, CONNECTICUT
BYRAM PARK POOL REPLACEMENT

LANDSCAPE/HARDSCAPE PLAN–SOUTH

CADD NO.	SCALE:	CONTRACT:	JOB NO.	DR.BY	DSN.BY	CHK.BY	APP.BY
GREENWICH	1"=20'	–	2130336	J.W.G.	J.W.G.	J.S.P.	C.B.W.

L2.00

FILE NO.

SHEET – OF –

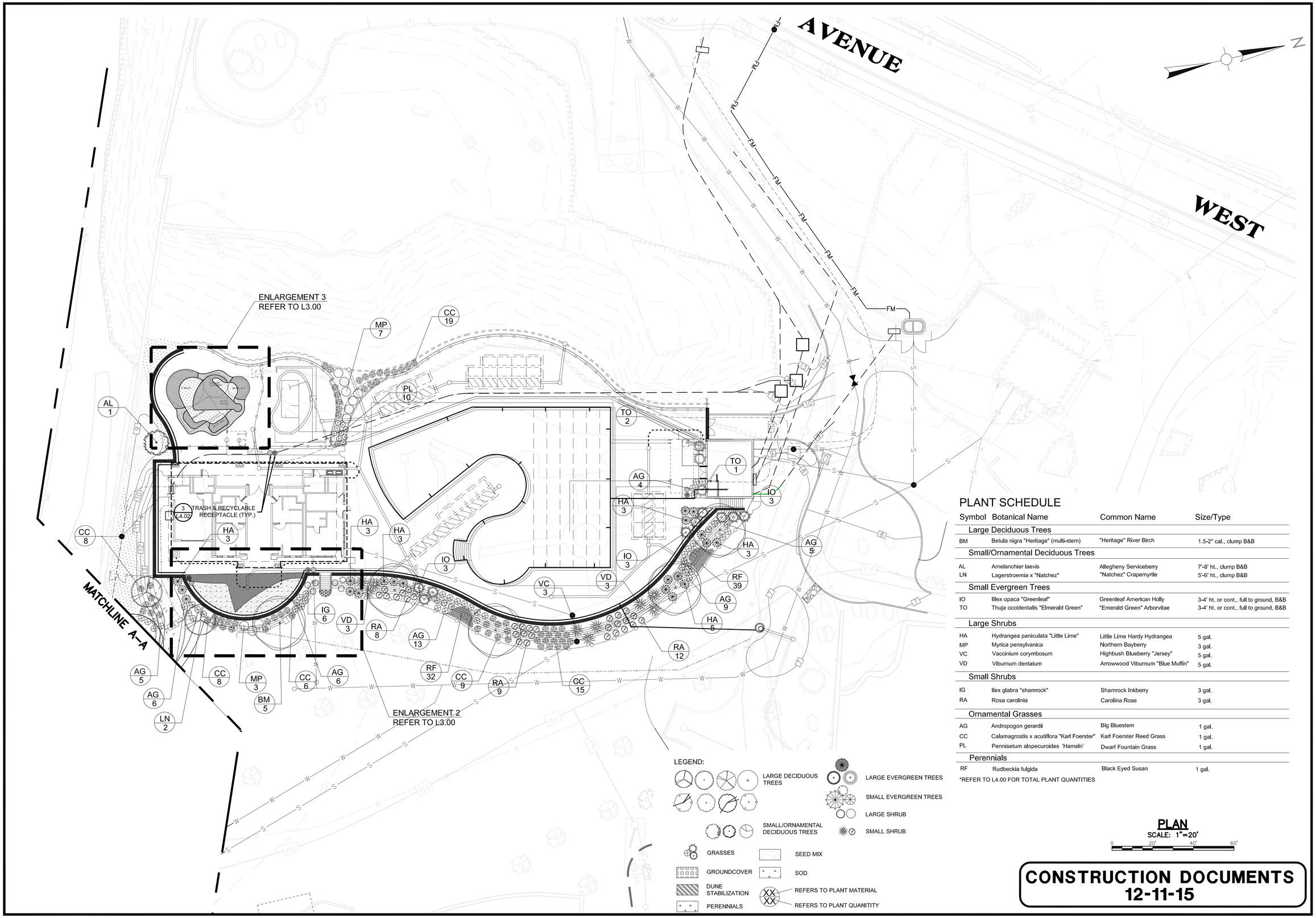

PLANT SCHEDULE

Symbol	Botanical Name	Common Name	Size/Type
Large Deciduous Trees			
BM	Betula nigra "Heritage" (multi-stem)	"Heritage" River Birch	1.5-2" cal., clump B&B
Small/Ornamental Deciduous Trees			
AL	Amelanchier laevis	Allegheny Serviceberry	7'-8' ht., clump B&B
LN	Lagerstroemia x "Natchez"	"Natchez" Crapemyrtle	5'-6' ht., clump B&B
Small Evergreen Trees			
IO	Ilex opaca "Greenleaf"	Greenleaf American Holly	3-4' ht. or cont., full to ground, B&B
TO	Thuja occidentalis "Elmerald Green"	"Emerald Green" Arborvitae	3-4' ht. or cont., full to ground, B&B
Large Shrubs			
HA	Hydrangea paniculata "Little Lime"	Little Lime Hardy Hydrangea	5 gal.
MP	Myrica pensylvanica	Northern Bayberry	3 gal.
VC	Vaccinium corymbosum	Highbush Blueberry "Jersey"	5 gal.
VD	Viburnum dentatum	Arrowwood Viburnum "Blue Muffin"	5 gal.
Small Shrubs			
IG	Ilex glabra "shamrock"	Shamrock Inkberry	3 gal.
RA	Rosa carolinia	Carolina Rose	3 gal.
Ornamental Grasses			
AG	Andropogon gerardii	Big Bluestem	1 gal.
CC	Calamagrostis x acutiflora "Karl Foerster"	Karl Foerster Reed Grass	1 gal.
PL	Pennisetum alopecuroides 'Hameln'	Dwarf Fountain Grass	1 gal.
Perennials			
RF	Rudbeckia fulgida	Black Eyed Susan	1 gal.

*REFER TO L4.00 FOR TOTAL PLANT QUANTITIES

LEGEND:

- LARGE DECIDUOUS TREES
- LARGE EVERGREEN TREES
- SMALL EVERGREEN TREES
- LARGE SHRUB
- SMALL/ORNAMENTAL DECIDUOUS TREES
- SMALL SHRUB
- GRASSES
- SEED MIX
- GROUNDCOVER
- SOD
- DUNE STABILIZATION
- REFERS TO PLANT MATERIAL (XX)
- PERENNIALS
- REFERS TO PLANT QUANITITY (XX)

PLAN
SCALE: 1"=20'
0 20' 40' 60'

CONSTRUCTION DOCUMENTS
12-11-15

Weston&Sampson®
273 Dividend Road, Rocky Hill, CT 06067
(860) 513-1473 (800) SAMPSON
www.westonandsampson.com

No.	Date	Dr.By	Ck.By	App.By	Description
		A	P	P	R O V E D

REGISTERED LANDSCAPE ARCHITECT — DATE 12-11-2015

STATE OF CONNECTICUT LICENSED LANDSCAPE ARCHITECT

TOWN OF GREENWICH – DEPARTMENT OF PUBLIC WORKS
RITCH AVENUE WEST, GREENWICH, CONNECTICUT
BYRAM PARK POOL REPLACEMENT

LANDSCAPE/HARDSCAPE PLAN–NORTH

CADD NO.	SCALE:	CONTRACT:	JOB NO.	DR.BY	DSN.BY	CHK.BY	APP.BY
GREENWICH	1"=20'	–	2130336	J.W.G.	J.W.G.	J.S.P.	C.B.W.

FILE NO.

L2.01

SHEET – OF –

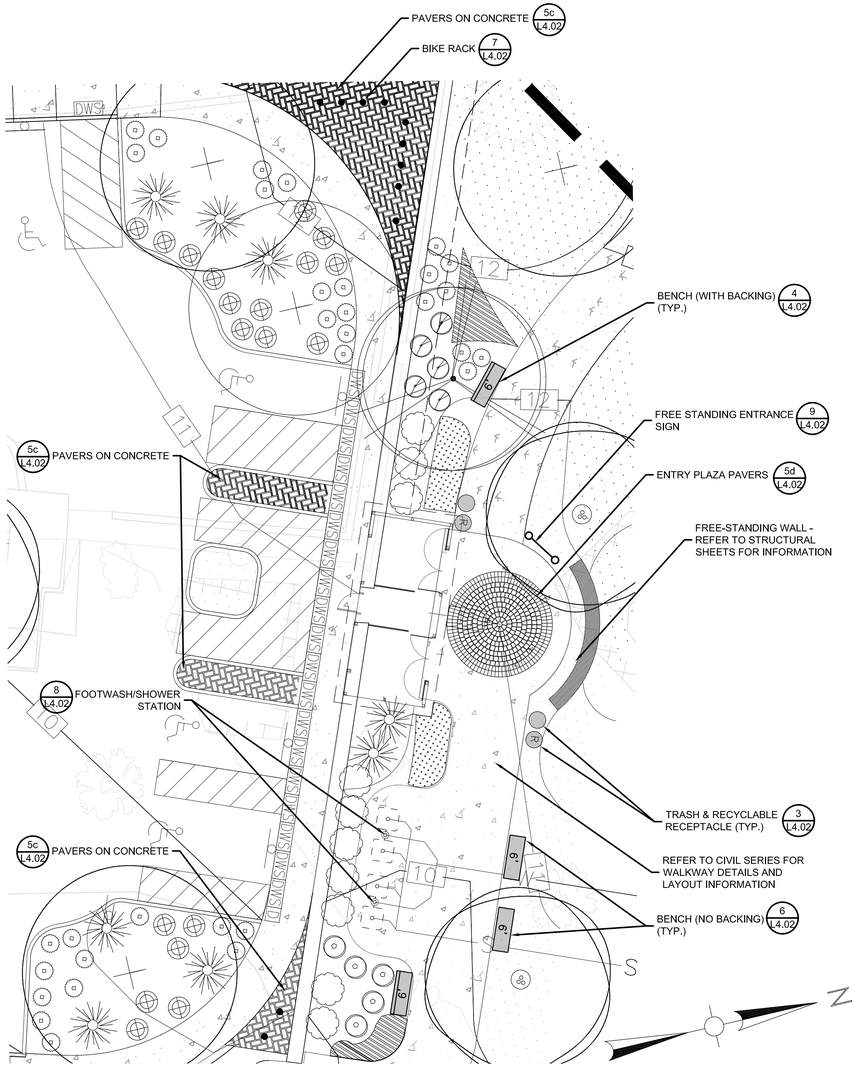

1 ENLARGEMENT 1 - ENTRY PLAZA
1"=10'

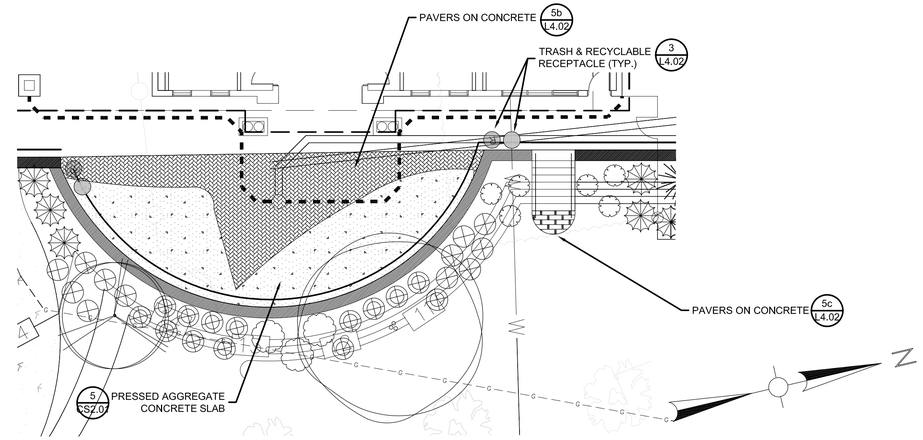

2 ENLARGEMENT 2 - POOL HOUSE PLAZA
1"=10'

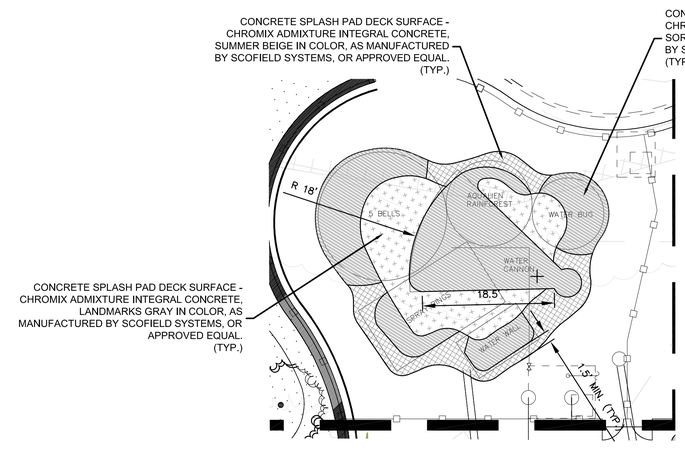

NOTES:

1. ELECTRONIC CAD FILE WILL BE AVAILABLE TO THE CONTRACTOR TO ASSIST IN LAYOUT OF SPLASH PAD PATTERN.

3 ENLARGEMENT 3 - SPRAY DECK
1"=10'

CONSTRUCTION DOCUMENTS
12-11-15

Weston&Sampson®
273 Dividend Road, Rocky Hill, CT 06067
(860) 513-1473 (800) SAMPSON
www.westonandsampson.com

No.	Date	Dr.By	Ck.By	App.By	Description
		A	P	P	R O V E D

12-11-2015
DATE

REGISTERED LANDSCAPE ARCHITECT

STATE OF CONNECTICUT
DANIEL P. BIGG
No. 1498
REGISTERED LANDSCAPE ARCHITECT

TOWN OF GREENWICH – DEPARTMENT OF PUBLIC WORKS
RITCH AVENUE WEST, GREENWICH, CONNECTICUT
BYRAM PARK POOL REPLACEMENT

HARDSCAPE & AMENITIES PLAN–SOUTH

CADD NO.	SCALE:	CONTRACT:	JOB NO.	DR.BY	DSN.BY	CHK.BY	APP.BY
GREENWICH	1"=10'	–	2130336	J.W.G.	J.W.G.	J.S.P.	C.B.W.

L3.00

FILE NO.

SHEET – OF –

NOTE: GROUND COVERS AND PERENNIALS TO BE INSTALLED WITH TRIANGULAR SPACING

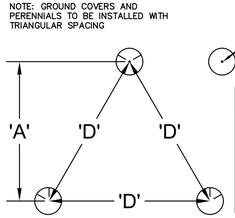

PLANT SPACING 'D'	ROW 'A'
8" O.C.	6.93" O.C.
10" O.C.	8.66" O.C.
12" O.C.	10.4" O.C.
18" O.C.	15.6" O.C.
24" O.C.	20.8" O.C.
36" O.C.	30.0" O.C.
48" O.C.	31.5" O.C.

1 PERENNIAL/GROUNDCOVER PLANT SPACING
NTS

1. THIN BRANCHES BY 1/3 RETAINING PROPER FORM
2. SET SHRUB ABOVE FINISHED GRADE 1/8 DEPTH OF ROOT BALL
3. 3" SHREDDED HARDWOOD MULCH OVER ENTIRE SHRUB BED
4. MAKE (3) - 1" CUTS IN SIDES OF ROOTBALL
5. PREPARED BACKFILL SOIL MIXTURE. SEE SPECS
6. UNDISTURBED SOIL PEDESTAL

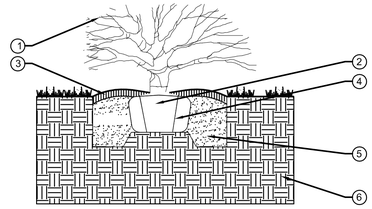

2 DECIDUOUS SHRUB PLANTING
NTS

1. 3" SHREDDED HARDWOOD MULCH OVER ENTIRE BED
2. PREPARED BACKFILL SOIL MIXTURE. SEE SPECS
3. UNDISTURBED SOIL PEDESTAL
4. SET GROUNDCOVERS AND PERENNIALS IN STAGGERED ROWS AT SPECIFIED SPACING
5. EXCAVATE ENTIRE BED TO DEPTH OF 8" AND PLACE PLANTING SOIL MIX

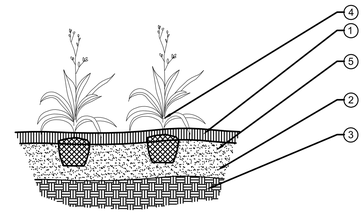

3 PERENNIAL/GROUNDCOVER PLANTING
NTS

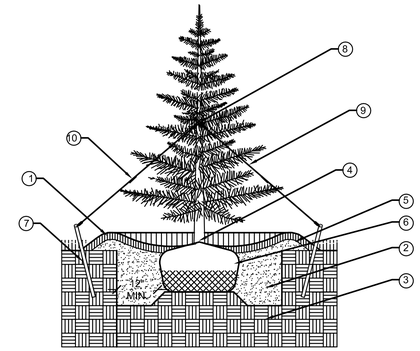

1. 3" SHREDDED HARDWOOD MULCH
2. PREPARED BACKFILL SOIL MIXTURE. SEE SPECS
3. UNDISTURBED SOIL PEDESTAL
4. SET TREE ABOVE THE ORIGINAL GRADE ⅛ DEPTH OF ROOT BALL
5. SOIL SAUCER: USE PREPARED SOIL, 6" MIN.
6. ROPES AT TOP OF BALL SHALL BE CUT. REMOVE TOP ⅓ OF BURLAP. NON-BIODEGRADEABLE MATERIAL SHALL BE TOTALLY REMOVED
7. 2" x 2" CEDAR STAKES
8. RUBBER HOSE AT BARK ON EACH MAJOR STEM. ALL MAJOR STEMS SHOULD BE WIRED TOGETHER.
9. (3) GUY WIRES, WHITE FLAG ON 2 STRANDS OF EACH TWISTED GALVANIZED WIRE
10. (3) TURNBUCKLE, GALVANIZED

4 EVERGREEN TREE PLANTING
NTS

1. 3" SHREDDED HARDWOOD MULCH
2. PREPARED BACKFILL SOIL MIXTURE. SEE SPECS
3. UNDISTURBED SOIL PEDESTAL
4. SET TREE ABOVE THE ORIGINAL GRADE ⅛ DEPTH OF ROOT BALL
5. SOIL SAUCER: USE PREPARED SOIL, 6" MIN.
6. ROPES AT TOP OF BALL SHALL BE CUT. REMOVE TOP ⅓ OF BURLAP. NON-BIODEGRADEABLE MATERIAL SHALL BE TOTALLY REMOVED
7. 2" x 2" CEDAR STAKES
8. RUBBER HOSE AT BARK ON EACH MAJOR STEM. ALL MAJOR STEMS SHOULD BE WIRED TOGETHER.
9. (3) GUY WIRES, WHITE FLAG ON 2 STRANDS OF EACH TWISTED GALVANIZED WIRE
10. (3) TURNBUCKLE, GALVANIZED

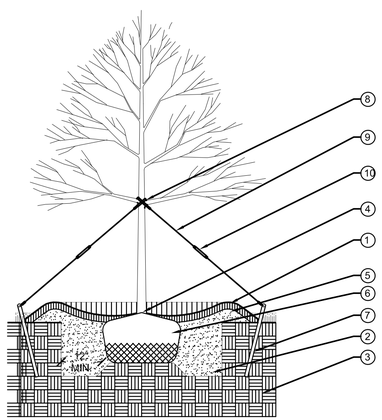

5 DECIDUOUS TREE PLANTING
NTS

NOTES:

1) STANDARD SAND FENCE TO BE A MINIMUM OF 4' IN HEIGHT
2) STANDARD SAND FENCE TO BE FREE FROM DECAY, BROKEN WIRE AND MISSING SLATS
3) WOOD POSTS TO BE A MINIMUM OF 6'-6" IN HEIGHT
4) WOOD POSTS TO BE CONSTRUCTED FROM RED CEDAR, WHITE CEDAR, BLACK LOCUST OR OTHER WOOD WITH SIMILAR LIFE SPAN AND STRENGTH
5) MINIMUM FOUR (4) WIRE TIES TO BE USED TO CONNECT STANDARD SAND FENCE
6) WIRE TIES TO BE CONSTRUCTED FROM A MINIMUM OF 12 GAUGE WIRE
7) STANDARD SAND FENCE TO BE PLACED A MINIMUM OF 10' APART ON CENTER
8) NEW VEGETATION TO BE 'CAPE' AMERICAN BEACH GRASS (AMMOPHILIA BREVILIGULATA). ANY SUBSTITUTIONS FOR THIS SPECIES MUST BE APPROVED BY LANDSCAPE ARCHITECT PRIOR TO INSTALLATION
9) NEW VEGETATION TO BE PLANTED IN STRIPS PARALLEL TO FENCE LINE AND AT A MAXIMUM WIDTH OF 5'.
10) NEW VEGETATION TO BE PLANTED BETWEEN 12" AND 18" APART ON CENTER
11) FIRST STANDARD SAND FENCE LINE TO BE BURIED A MINIMUM OF 3" IN SAND. ADDITIONAL SAND MAY BE BROUGHT ON SITE AS NEEDED TO ACHIEVE MINIMUM DEPTH
12) WOOD POSTS TO BE BURIED A MINIMUM OF 1' IN SAND.
13) SECOND LINE OF STANDARD SAND FENCE TO BE INSTALLED ONCE DUNE HAS REACHED A MINIMUM HEIGHT OF 3'-3"
14) SLOW RELEASE 10-10-10 FERTILIZER TO BE APPLIED AT A RATE OF 100 LBS PER ACRE
15) NITROGEN TO BE APPLIED AT A RATE OF 25-60 LBS PER ACRE, WITH HALF THE AMOUNT APPLIED IN SPRING BEFORE APRIL 1 AND HALF APPLIED IN FALL
16) NEW VEGETATION TO BE INSTALLED BETWEEN APRIL 1 AND NOVEMBER 1

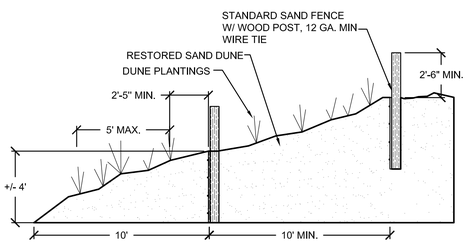

PLANTING SPECIES: CAPE AMERICAN BEACH GRASS

6 SAND DUNE RESTORATION DETAIL
NTS

1. 3" SHREDDED HARDWOOD MULCH
2. PREPARED BACKFILL SOIL MIXTURE. SEE SPECS
3. UNDISTURBED SOIL PEDESTAL
4. SET TREE ABOVE THE ORIGINAL GRADE ⅛ DEPTH OF ROOT BALL
5. SOIL SAUCER: USE PREPARED SOIL, 6" MIN.
6. ROPES AT TOP OF BALL SHALL BE CUT. REMOVE TOP ⅓ OF BURLAP. NON-BIODEGRADEABLE MATERIAL SHALL BE TOTALLY REMOVED
7. 2" x 2" CEDAR STAKES
8. RUBBER HOSE AT BARK ON EACH MAJOR STEM. ALL MAJOR STEMS SHOULD BE WIRED TOGETHER.

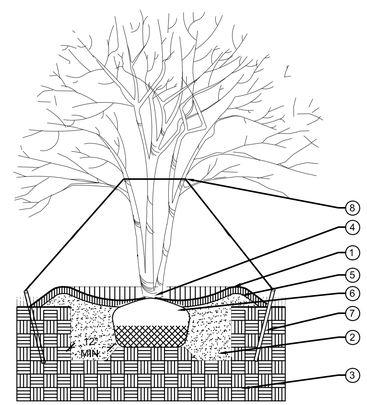

7 MULTI-STEM DECIDUOUS TREE PLANTING
NTS

PLANT SCHEDULE

Symbol	Qty	Botanical Name	Common Name	Size/Type	Spacing	Salt Tolerance	Remarks
Large Deciduous Trees							
AR	6	Acer rubrum "Red Sunset"	"Red Sunset" Red Maple	1.5-2" cal., 6' Ct. B&B		Spray: None/ Soils: None	Uniform branching pattern
BM	9	Betula nigra "Heritage" (multi-stem)	"Heritage" River Birch	1.5-2" cal., clump B&B		Spray: None/ Soils: None	Uniform branching pattern
BN	5	Betula nigra "Heritage" (single-stem)	"Heritage" River Birch	1.5-2" cal., s/s B&B		Spray: None/ Soils: None	Uniform branching pattern
FP	1	Fraxinus pennsylvanica "Patmore"	Patmore Green Ash	1.5-2" cal., 6' Ct. B&B		Spray: High/ Soils: None	Uniform branching pattern
QR	5	Quercus rubra	Northern Red Oak	1.5-2" cal., 6' Ct. B&B		Spray: None/ Soils: None	Uniform branching pattern
Small/Ornamental Deciduous Trees							
AL	1	Amelanchier laevis	Allegheny Serviceberry	7'-8' ht., clump B&B		Spray: High/ Soils: High	Uniform branching pattern
LN	2	Lagerstroemia x "Natchez"	"Natchez" Crapemyrtle	5'-6' ht., clump B&B		Spray: None/ Soils: None	Uniform branching pattern
Small Evergreen Trees							
IO	9	Illex opaca "Greenleaf"	Greenleaf American Holly	3-4' ht. or cont., full to ground, B&B		Spray: Low /Soil: Low	Full to base
TO	3	Thuja occidentalis "Elmerald Green"	"Emerald Green" Arborvitae	3-4' ht. or cont., full to ground, B&B		Spray: Low/ Soil: Low	Full to base
Large Shrubs							
HA	20	Hydrangea paniculata "Little Lime"	Little Lime Hardy Hydrangea	5 gal.	48" o.c.	Spray: High/ Soils: None	Full to base
MP	20	Myrica pensylvanica	Northern Bayberry	3 gal.	48" o.c.	Spray: None/ Soils: None	Full to base; Even Male& Female
VC	3	Vaccinium corymbosum	Highbush Blueberry "Jersey"	5 gal.	48" o.c.	Spray: High/ Soils: High	Full to base
VD	14	Viburnum dentatum	Arrowwood Viburnum "Blue Muffin"	5 gal.	48" o.c.	Spray: High/ Soils: High	Full to base
Small Shrubs							
IG	6	Ilex glabra "shamrock"	Shamrock Inkberry	3 gal.	24" o.c.	Spray: High/ Soils: None	Full to base
RA	34	Rosa carolinia	Carolina Rose	3 gal.	36" o.c.	Spray: High/ Soils: None	Full to base
Ornamental Grasses							
AG	48	Andropogon gerardii	Big Bluestem	1 gal.	48" o.c.	Spray: High/ Soils: High	
CC	85	Calamagrostis x acutiflora "Karl Foerster"	Karl Foerster Reed Grass	1 gal.	48" o.c.	Spray: High/ Soils: High	
PL	42	Pennisetum alopecuroides 'Hameln'	Dwarf Fountain Grass	1 gal.	48" o.c.	Spray: None/ Soils: None	
SS	5	Schizachyrium scoparium	Little Bluestem	1 gal.	48" o.c.	Spray: None/ Soils: None	
Perennials							
HB	48	Hemerocallis x "Buttered Popcorn"	Buttered Popcorn Day Lily	1 gal.	18" o.c.	Spray: Low/ Soils: High	
HS	38	Hemerocallis x "Stella D'oro"	Stella D'oro Day Lily	1 gal.	18" o.c.	Spray: Low/ Soils: High	
RF	71	Rudbeckia fulgida	Black Eyed Susan	1 gal.	18" o.c.	Spray: None/ Soils: High	
Dune Restoration							
AB	2156	Ammophila breviligulata "Cape"	Cape American Beachgrass	plug	18" o.c.	Spray: High/ Soils: High	

Note:
Salt Tolerance - None refers to no documented Salt Tolerance Information.

CONSTRUCTION DOCUMENTS
12-11-15

Weston&Sampson®
273 Dividend Road, Rocky Hill, CT 06067
(860) 513-1473 (800) SAMPSON
www.westonandsampson.com

No.	Date	Dr.By	Ck.By	App.By	Description

APPROVED

12-11-2015
DATE

REGISTERED LANDSCAPE ARCHITECT

STATE OF CONNECTICUT LICENSED LANDSCAPE ARCHITECT

TOWN OF GREENWICH – DEPARTMENT OF PUBLIC WORKS
RITCH AVENUE WEST, GREENWICH, CONNECTICUT
BYRAM PARK POOL REPLACEMENT
LANDSCAPE & HARDSCAPE DETAILS

CADD NO.	SCALE:	CONTRACT:	JOB NO.	DR.BY	DSN.BY	CHK.BY	APP.BY
GREENWICH	NONE	–	2130336	J.W.G.	J.W.G.	J.S.P.	C.B.W.

L4.00

FILE NO.

SHEET – OF –

PLANTING SPECIFICATIONS

1. QUALITY ASSURANCE:
   A. Landscape planting and related work shall be performed by personnel experienced in landscape industries under the full time supervision of a qualified foreman.
   B. Applicable Specifications and Standards:
      - American Joint Committee on Horticultural Nomenclature
      - American Standard for Nursery Stock, latest edition
      - American Association of Nurserymen Landscape Specification Guidelines, latest edition, Landscape Contractors Association.
   C. Work shall be coordinated with all other trades on site.

2. SUBMITTALS: Submit the following to the Landscape Architect prior to beginning work:
   A. Copies of manufacturer's data for all materials required including: seed certification, hydroseed mix, sod certification, fertilizer, mulch, antidesiccant stakes/guys.
   B. Samples of required materials.
   C. Chemical and mechanical analysis and samples of all existing soil, topsoil, organic matter and soil mix to be used and recommendations for soil conditioning materials specific to the vegetation type to be installed (eg. lawns, evergreens, deciduous plants or perennials).
   D. Planting schedule showing the dates (earliest and latest) proposed for each type of plant specified, schedule each type of planting within the normal planting seasons for such work. Include requests for any proposed changes in the approved planting season and a list of proposed sources for all plant materials.
   E. List of proposed sources and certificate of compliance for all plant material.
   F. The contractor shall submit a written manual prepared for the Owner that outlines a schedule for proper maintenance of the plantings. This maintenance schedule shall include timing and methods for watering, fertilization, mulching, pruning, and other maintenance operations.
   G. Contractor shall provide nursery photos of trees to be installed or allow the Landscape Architect to tag trees at the nursery with contractor.

3. DELIVERY, HANDLING, AND STORAGE:
   A. Deliver packaged materials in manufacturer's unopened containers or bundles, fully identified with name, brand, type, weight, and analysis. Store packaged materials in such a manner as to prevent damage or intrusion of foreign matter.
   B. Dig balled and burlapped (B& B) plants with firm, natural balls of earth, of a diameter not less than that shown on the plant list nor less than recommended by the American Standard for Nursery Stock, and of sufficient depth to include the fibrous and feeding roots. B&B plants will not be accepted if the ball is cracked or broken before or during planting operation.
   C. Deliver trees and shrubs after preparations for planting have been completed. Do not bend, bind, or tie trees or shrubs in such a manner as to damage bark, break branches or destroy natural shape. If planting is delayed more than 6 hours after delivery, set trees and shrubs in shade, protect from weather and mechanical damage, and keep roots moist by heeling-in bare root stock and covering plant balls with soil, peat moss or other acceptable material for balled stock. Plants shall be kept well watered and shall not remain unplanted for longer than ten (10) days after delivery.
   D. Plants shall be lifted and handled from the bottom of the ball only.
   E. Do not remove container-grown stock from containers until planting time.

4. DRAINAGE: Before planting, determine that areas to receive plant material have adequate subdrainage.
   A. The landscape contractor is responsible for drainage tests as necessary to identify any problems prior to beginning planting operations. Upon commencement of planting operations the landscape contractor assumes responsibility for soil conditions.
   B. Dig planting pits to full depth and dimensions indicated on drawings.
   C. At bottom of planting pit, excavate rectangular pit 12 inches by 12 inches by 18 inches deep. Quickly pour water into pit to a depth of 6 inches (approximately 3-3 3/4 gallon). Note time required for water to be completely absorbed. Divide time noted by 6 to achieve average rate of absorption for 1 inch of water. Where rate of absorption exceeds 60 minutes per inch, notify the Landscape Architect immediately for directions on how to proceed.

5. PLANTING DATES: Planting shall be done only within the following dates except as approved by the Landscape Architect.
   A. Deciduous Trees and Shrubs: March 15 to June 15 and October 1 to November 15.
   B. Evergreen Trees, Shrubs and Vines: March 1 to June 1 and September 1 to November 15.
   C. Seeding: April 1 to June 1 or August 15 to October 15, unless otherwise authorized by the Landscape Architect.
   D. All plant material shall be guaranteed by the Contractor for a period of 1 year from the date final acceptance to be in good, healthy and flourishing condition.

6. MATERIALS FOR PLANTING:
   A. Topsoil: shall be a fertile, friable natural loam, uniform in composition, free of stones, lumps, plants and their roots, debris and other extraneous matter over 1 inch in diameter, capable of sustaining vigorous plant growth. Soil shall be harvested at a single source from the O and/or A horizons of the soil profile.
      1) Topsoil shall have a pH range of 5.5 to 7.0.
      2) Topsoil shall contain over 4% organic matter by dry weight .
      3) Soil Texture: sandy loam, sandy clay loam with the following particle size distribution:
         Gravel Less than 10%
         Silt 15-30%
         Clay 20-35%
         Chemical Levels shall be:
         Magnesium Mg 100+ units
         Phosphorus P205=150 + units
         Potassium - K20=120 + units
      4) Soluble Salts/ Conductivity - Not to exceed 900 ppm/0.9 mmhos/cm (in soil); not to exceed 3000 ppm/2.5 mmhos/cm (in high organic mix)
      5) Cation exchange capacity shall be a minimum of 8 meq/100g.
   B. Clay Loam to Sandy Clay Loam Soil: shall be a fertile, friable natural loam, uniform in composition, free of stones, lumps, plants and their roots, debris and other extraneous matter over 1 inch in diameter, capable of sustaining vigorous plant growth.
      1) Soil shall have a pH range of 5.5 to 6.5.
      2) Soil shall contain 2-5% organic content by volume.
      3) Soil Texture: Clay loam to sandy clay loam with the following particle size distribution:
         Gravel Less than 10%
         Sand 20-50%
         Silt <35%%
         Clay 20-40%
      4) Chemical Levels shall be:
         Magnesium Mg 100+ units
         Phosphorus P_20 150+ units
         Potassium - K_20 120+ units
      5) Soluble Salts/ Conductivity - Not to exceed 900 ppm/0.9 mmhos/cm (in soil); not to exceed 3000 ppm/2.5 mmhos/cm (in high organic mix)
      6) Cation exchange capacity shall be 20-35 meq/100g.
   C. Compost: Compost shall be mature, stable, weed free, and produced by aerobic decomposition of organic matter. Compost feedstock shall be plant matter, such as high lignin forestry products or yard waste (leaves, brush and yard trimmings).
      1) The product must not contain any visible refuse or other physical contaminants, substances toxic to plants, or over 5% sand, silt, clay or rock material by dry weight.
      2) Compost shall be sampled and tested as required by the Seal of Testing Assurance Program of the United States Composting Council (USCC) and shall meet the physical requirements for compost as determined by USCC.
      3) The product shall possess no objectionable odors. The product must meet all applicable USEPA CFR, Title 40, Part 503 Standards for Class A biosolids.
      4) The moisture level shall be such that no visible water or dust is produced when handling the material.
   D. Double Shredded Hardwood Bark: Shall be spread no thicker than a 3" thick depth.
   E. Sand: Shall be quartz based sharp concrete sand, ASTM C-33 Fine Aggregate, with a Fines Modulus Index between 2.8 and 3.2.
   F. Perlite: Coarse horticultural grade expanded, volcanic perlite. Maximum density shall be 8 lb./ft3.
      1) pH shall be 6.5 to 7.5.
      2) Perlite shall be meet the Perlite Institute's Standards for Gradation for Horticultural Perlite for Coarse Perlite with no more than 70% passing through a #16 Standard Sieve.
   G. Humus: Shall be mature, stable, weed free, and produced by aerobic decomposition of organic matter. Compost feedstock shall be plant matter, such as high lignin forestry products or yard waste (leaves, brush and yard trimmings).
      1) Humus shall have a pH between 5.5 and 7.0.
      2) Soluble Salt Concentration shall be less than 10dS/m.
      3) Cation exchange capacity rate shall be 100-250.
      4) The product must not contain any visible refuse or other physical contaminants, substances toxic to plants, or over 5% sand, silt, clay or rock material by dry weight.
      5) The product shall possess no objectionable odors. The product must meet all applicable USEPA CFR, Title 40, Part 503 Standards for Class A biosolids.
      6) The moisture level shall be such that no visible water or dust is produced when handling the material.
   H. Trace Elements: Shall be commercially available slow release materials containing zinc (Zn), Molybdenum (Mo), Copper (Cu), Boron (B), and Magnesium (Mn).
   I. Fertilizer: A commercial fertilizer (dry) for deciduous trees, shrubs and ground cover with an analysis of 10% Nitrogen, 6% Phosphorus and 4% Potassium shall be used. A commercial fertilizer (dry) for evergreen trees and shrubs with an analysis of 7% Nitrogen, 7% Phosphorus, and 7% Potassium shall be used. This fertilizer shall be granular with a minimum of 50% of the total Nitrogen in organic form. 14-14-14-Osmocote (or approved equal) shall be applied at a rate of 10 lbs. per square foot, tilled to a depth of 8 inch, shall be used for perennials.
   J. Soil Separator: Shall be rot resistant non-woven polypropylene filter fabric, water permeable, and unaffected by freezing and thawing. Acceptable products include: Mirafi 140N, Mirafi Civil Engineering Co., or Stabilenka Type T-80, American Enka Co., Enka, N.C.
   K. Mulch, soil amendments, and topsoil shall be incidental to plantings and not paid for as a separate item.

7. PLANT MATERIALS: (Refer to the PLANT LIST on the drawings for specific types and quantities of plants):
   A. Plants shall be nursery grown in accordance with good horticultural practices. Plants shall either be obtained from local nurseries and/or others, which have soil (heavy clay) and climatic conditions similar to those in the locality of the project.
   B. Plant material grown in sandy, well-drained soil will not be approved for this project. Plants shall be true to species and variety and unless specifically noted otherwise, all plants shall be of specimen quality, exceptionally heavy, symmetrical, tightly-knit plants, so trained or favored in their development and appearance as to be superior in form, number of branches, compactness and symmetry.
   C. Plants shall be sound, healthy and vigorous, well branched and densely foliated when in leaf, free of disease, insect pests, eggs or larvae and shall have healthy, well-developed root systems. They shall be free from physical damage or any conditions that would prevent thriving health and the desired appearance.
   D. Trees, which have a damaged or crooked leader, or multiple leaders, unless specified in the plant list, will be rejected. Trees with abrasion of the bark, sun scald, disfiguring knots, or pruning cuts more than 1 1/4 inch diameter which have not completely callused, will be rejected.
   E. Plants shall conform to measurements specified in the plant schedules except that plants larger than specified may be used if acceptable to the Landscape Architect or owner. Use of such plants shall not increase the contract price. If larger plants are accepted, the root ball shall be sized for the larger plant.
   F. Caliper Measurement: Shall be taken at a point on the trunk 6 inches above natural ground line for trees up to 4 inches diameter, and at a point 12 inches above the natural ground line for trees over 4 inches diameter.
   G. Plants shall be measured when branches are in the normal position. Height and spread dimensions specified refer to the main body of the plant and not from branch tip to tip.

8. SOIL MIXING PROCEDURES:
   A. Topsoil used in sand/soil mixes shall be screened or shredded prior to mixing in sands. Maximum clod inclusion for soil mixes shall not exceed:

Clod size (largest dimension)	% of the soil mix volume
Less than 1"	Unlimited
1 to 3 inches	20%
3 to 6 inches	5%
>6 inches	Less than 2%

   B. Source material and soil mix stockpiles shall be protected from rain by covering with filter cloth.

9. INSPECTION:
   A. Examine the areas and conditions where soil mix is to be installed and notify the Landscape Architect of conditions detrimental to the proper and timely completion of the work. Do not proceed with the work until unsatisfactory conditions are corrected to permit proper installation of the work.
   B. Cooperate with other Contractors and trades working in and adjacent to other work areas. Examine drawings which show development of entire project and become familiar with scope of other work required.

10. SOIL INSTALLATION - GENERAL PROCEDURES:
   A. If subgrade soil compaction exceeds 80%, existing soil shall be ripped to a depth of 12 inch to alleviate compaction which has taken place during construction. Prior to loosening of soil, Contractor must locate existing utilities and coordinate with Owner any underground electric lines, drainage pipes, conduits, etc.
   B. Prepare the subgrade by roughening the top 3" of the subsoil by dragging the teeth of a backhoe bucket across the surface.
   C. Begin soil installation as soon as subsoil is prepared. Use low impact equipment with track belts, large tires, or low tire pressure to lower compaction and soil damage during installation.
   D. Monitor compaction during installation and loosen soils as needed if compaction exceeds 80%.
   E. Install specified soil in 12"-18" thick lifts. Compact each lift sufficiently to reduce settling but not enough to prevent the movement of water and feeder roots through the soil. The soils in each lift should feel firm to the foot in all areas and make only slight heel prints.

10. INSTALLATION OF SOIL MIX FOR LAWN AREAS ON GRADE:
   A. Soil Mix for Lawns on Grade: shall consist of 10% compost and 90% topsoil, by volume. These materials must meet specifications described in Section 2.00.
   B. Loosen subgrade lawn areas to a minimum of 3". Remove stones more than 1-1/2" in any dimension and sticks, roots, rubbish, and other extraneous matter. Limit preparation to areas which will be planted promptly after preparation.
   C. Spread soil mix for lawn areas on grade to a minimum depth of 8" as required to meet grade and elevations shown on drawings, after lightly rolling and natural settlement. Allow for sod thickness in areas to be sodded.

12. INSTALLATION OF SOIL MIX FOR TREE PITS ON GRADE
   A. Confirm that native subsoil drains at a rate of at least ½" per hour. If drainage is less than ½" per hour, provide subsurface drainage lines.
   B. Install 30-36" of Soil Mix for Tree Pit Backfill on Grade:
      1) Shall consist of clay loam to sandy clay loam soil, sand, and composted pine bark fines at a rate of 5:5:1 to 10:5:1.5 to achieve the following:
         (a)Clay content of Soil Mix shall be 10-20% of the soil mix, by volume.
         (b)Minimum amount of coarse to medium sand in the mix shall be 55%
         (c)Minimum infiltration rate at 80-85% compaction shall be 1-3 inches per hour.
   A. Composted pine bark fines shall not exceed 10% of the total soil mix by volume.
   B. Till 1" of compost into the top 6" of the installed Soil Mix for Tree Pit Backfill on Grade.

13. INSTALLATION OF SOIL MIX FOR MULCHED SHRUB AND PERENNIAL BEDS:
   A. Confirm that native subsoil drains at a rate of at least ½" per hour. If drainage is less than ½" per hour, provide subsurface drainage lines.
   B. Install 14" of Soil Mix for Mulched Shrub and Perennial Beds on Grade:
      1) Shall consist of clay loam to sandy clay loam soil, sand, and composted pine bark fines at a rate of 5:5:1 to 10:5:1.5 to achieve the following:
         (a)Clay content of Soil Mix shall be 10-20% of the soil mix, by volume.
         (b)Minimum amount of coarse to medium sand in the mix shall be 55%
         (c)Minimum infiltration rate at 80-85% compaction shall be 1-3 inches per hour.
      2) Composted pine bark fines shall not exceed 10% of the total soil mix by volume.
   C. Till 1" of compost into the top 6" of the installed Soil Mix for shrubs, perennials, and beds..

14. EROSION CONTROL MATERIAL AND PLANTING ON STEEP SLOPES:
   A. Material meeting the requirements of the specifications shall be installed and maintained on the designated areas as shown and specified. The areas to be covered shall be prepared and fertilized as specified before the erosion material is placed. Immediately prior to the planting operations, the material shall be laid evenly, smoothly and in contact with the soil throughout.
   B. Lay erosion control materials with one inch nominal openings in accordance with manufacturer's instructions. Unroll in direction of water flow. Overlap sheets by at least 6 inches. Where strips are to be spliced lengthwise, overlap strips by 8 inches. Upgrade section shall be on top of all splices.
   C. The Contractor shall maintain and protect the erosion control material until the final inspection. Maintenance shall consist of repairs made necessary by erosion, wind or any other cause. Following the restoration of damaged areas under plant and turf guarantee and establishment requirements for applicable underlying items; the erosion control material shall be repaired or replaced to meet the original requirements and maintained until the final inspection.

15. GENERAL PLANT INSTALLATION:
   A. Excavation: Excavate all tree pits and planting areas to the width and depth shown in the planting details.
   B. Center plant in pit and orient for the best visual effect. Set plants plumb and hold rigidly in position until soil has been tamped firmly around root ball.
   C. Mulch within 48 hours after planting and after applying the pre-emergent herbicide, except ground cover areas (which shall have organic material placed before planting) with a 3" layer of mulch immediately after planting. All bed lines shall be cut with a smooth consistent edge to a minimum depth of 3 inches. Keep mulch out of the crowns of shrubs and off buildings, sidewalks, light standards, and other structures.
   D. All planting areas to conform to specified grades after full settlement has occurred and mulch has been applied. Provide saucers around tree pits as shown on planting details. Remove all tags, labels, strings, etc. from all plants.

16. PRUNING
   A. Each tree shall be pruned in accordance with American Nurserymen Association Standards to preserve the natural character of the plant.
   B. Pruning shall include the following:
      1) Remove all dead wood, suckers, and broken or badly bruised branches. Never cut a leader.
      2) Use only clean, sharp tools.
   C. Apply anti-desiccant to foliage if conditions warrant.

17. CLEAN-UP
   A. Soil or other material deposited on paved areas shall be promptly removed. Keep paved areas clean at all times.
   B. Upon completion of planting, all excess stones, debris, and soil shall be cleaned up and removed from the site.
   C. Broom and hose clean all pavements.

18. MAINTENANCE AND PROTECTION OF PLANTINGS
   A. Maintenance shall begin immediately after each plant is planted and shall continue until acceptance.
   B. Maintenance shall include:
      1) pruning, watering, cultivating, weeding, mulching, repairing of stakes or guys, resetting plants to proper grades or upright position, restoration of the planting saucer, and furnishing and applying sprays required to keep the planting free of insects and disease.
      2) Protect planting areas and plants against trespassing and damage of all kinds for the duration of the maintenance period. If any plants become damaged or injured, they shall be treated or replaced as required.
      3) All plantings shall be thoroughly saturated at least twice per week during maintenance period.
   C. Tree protection tubes shall be constructed from flexible UV-inhibited polyethylene, polypropylene, or similar material designed to speed photosynthesis, promote seedling growth, and reduce planting stress by trapping moisture, thereby raising relative humidity and ambient temperature inside the tube. Tree tubes shall protect the tree seed-lings from animals, wind desiccation, small rodents, chemical sprays, and insects. The design of the tree tubes shall not be detrimental to the establishment and growth of the seedling or young tree. Tree tube designs shall be capable of accommodating tree growth for at least 3 years after planting.

19. PERMANENT SEEDING OR SODDING FOR GRASS AREAS:
   A. Lawn Seed or Sod varieties shall be an improved variety turf-type tall fescue blend. The landscape contractor shall select from varieties approved by the Virginia Department of Agriculture.
   B. Refer to the Virginia Erosion and Sediment Control Handbook, for guidelines, specifications and installation techniques of seed and sod.
   C. Maintenance shall begin immediately after each plant and lawn area is installed and shall continue until 90 days after final acceptance of the last section.

20. SEEDING MIXTURES FOR PERMANENT SEEDING:
   A. Seed mixture(s) for permanent seeding shall be selected from the following table. Seed shall be spread at a rate of 4-5 lbs/ 1,000 sf.

Mixture Type	Full Sun Mixture	Shade Mixture
Kentucky Bluegrass	50%	0%
Perennial Ryegrass	10%	0%
Annual Ryegrass	10%	0%
Chewings Fescue	15%	30%
Creeping Red Fescue	15%	15%
Hard Fescue	0%	25%
Kentucky Bluegrass (improved varieties)	0%	30%

21. NOT USED

DECIDUOUS TREES

Tree Type/ Tree Size	Staking or Guying Material	Wire	Turnbuckle or Flag
up to 3½" caliper	2" x 2" cedar stake (2 required)	Polypropylene tree support webbing	3½" w/ flag
3½" to 6" caliper	6" ground anchor or 6" diameter deadman by 2' (3 required)	3/16" dia. triple stranded cable	5/16" by 4½", galv. w/ flag
6" and greater caliper	6" ground anchor or 6" diameter deadman by 3' long (3 required)	3/16" dia. cable	5/16" by 4½", galv. w/ flag

EVERGREEN TREES AND SHRUBS

Tree Type/ Tree Size	Staking or Guying Material	Wire	Turnbuckle or Flag
5' to 7' height	2" x 3" by 3' long wood stake, staining optional (3 guys required)	Polypropylene tree support webbing	3½" w/ flag
12' to 16' height			
7' to 12' height	2" x 4" by 3' long wood stake, staining optional, or 4" ground anchor (3 guys required)	3/16" dia. triple stranded cable	8" w/ flag
	6" ground anchor or 6" diameter deadman by 3' long (3 required)	3/16" dia. cable	5/16" by 4½", galv. w/ flag

22. SOD MIXTURE
   A. Sod shall be grown in northern Virginia and cut with a sod thickness of atleast ¾" thickness harvested and replaced within 36 hours, aged a minimum of 18 months and approximately 24" x 60" rolls, or as approved by the Landscape Architect.
   B. Tall Fescue/ Bluegrass Sod (45% Tombstone turf type Tall Fescue, 45% Taos turf type Tall Fescue and 10% midnight Kentucky Bluegrass)

23. ` SUPPORT MATERIALS
   A. Wire for staking and guying shall be pliable annealed twisted galvanized steel wire, galvanized eyebolts, and galvanized turnbuckles of sufficient strength to withstand wind pressure.
   B. Tree support webbing shall be polypropylene, ¾" width with a minimum 900 lb tensile strength and green color.
   C. Hose to encase wires and cables shall be new two-ply reinforced rubber garden hose not less than 1/2- inch in diameter, black in color. A commercially available nylon tree support webbing system is an acceptable alternative.
   D. Stakes shall be hardwood stakes and shall be sharp pointed at one end. Size and length of the stakes shall be as required for staking and guying.
   E. Material for supporting trees shall be in accordance with the following schedule:

24. BEGINNING OF ESTABLISHMENT PERIOD
The establishment period shall begin on a date following completion of the planting (spring or fall), when the Contractor receives written confirmation from the Landscape Architect, that all work has been completed in accordance with the requirements of this Section and the plans, and that all plants are living, healthy and in a viable growing condition as determined by the Landscape Architect. Plants that are replaced in order to meet these initial specifications are not considered as "plant replacements."

25. ESTABLISHMENT PERIOD
The establishment period shall continue through a minimum of one growing season, and shall terminate on the date determined in writing by the Landscape Architect. During the establishment period, the Contractor shall do all work necessary to keep the plants in a healthy growing condition, including, but not limited to the following:
   A. 1. Watering: The Contractor shall prepare and submit to the Landscape Architect a schedule for watering in accordance with the frequency listed on the project summary sheet. However, the Contractor shall be responsible for watering as frequently as is necessary to maintain an adequate supply of moisture within the root zone of all plantings at all times or if there is less than 1 inch of rainfall in a seven day period during the months of April through September. Water shall not be applied at a force that will displace soil or mulch. Quantities and frequency of watering shown on the plans are for minimum estimating purposes only.
      a) The Landscape Architect may require the use of watering needles or other approved methods to prevent displacement of soil, mulch and runoff of water. The Landscape Architect may make periodic inspections to ascertain the adequacy of the Contractor's watering and the moisture content of the soil.
      b) The quantity of water supplied shall not be in excess of that normally required to ensure optimum growing conditions. Watering shall commence until methods and equipment have been approved by the Landscape Architect. The Landscape Architect may require or suspend watering at any time.
   B. Notification and Scheduling: When notified by the Landscape Architect that watering is required, the Contractor shall begin watering within 48 hours with sufficient labor and equipment and shall continue to water daily where and as directed, without delays or interruptions, to ensure that the root zone does not become dry at any time. In the event the Contractor fails to begin watering operations within 48 hours after notification, the Landscape Architect may proceed with adequate forces, equipment, and materials to perform the watering operations and the entire cost of the watering operations will be deducted from monies due the Contractor.
   C. All establishment period maintenance work, except watering, shall begin within 7 working days after the Landscape Architect notifies the Contractor that the establishment period has begun.
   D. Plant Replacements: Between the beginning and ending dates of the establishment period, plants that are dead, defective, or otherwise not in a healthy growing condition as determined by the Landscape Architect shall be removed immediately at the Contractor's expense. Plant replacements shall be made once in the spring if required (Between March 1 and March 31), and once in the fall if required (Between November 1 and December 31), as necessary to replace dead or defective plant materials as directed by the Landscape Architect. For each plant replaced, the first replacement, if required, shall be at the Contractor's expense. The second replacement, if required, will be paid for at 35 percent of the original contract unit price per each plant replaced.
   E. Stakes, and Guys, and/or Below Ground Tree Anchors shall be repaired or replaced immediately as needed. Stakes and Guys shall be removed when no longer required as directed by the Landscape Architect. Tree anchors shall remain in place.
   F. Eroded Saucer Rings shall be repaired or replaced as needed and/or as directed by the Landscape Architect .
   G. Mulch shall be redressed as needed and/or as directed by the Landscape Architect throughout the establishment period.
   H. Vegetation Control shall consist of the control and/or removal of weeds, grass and root growth from plant beds and mulched areas around individual plants. Such weeding shall be performed once in the month of May, June, July, August, and September for a total of five weeding operations over the duration of the establishment period. The Contractor shall submit a schedule for vegetation control for approval by the Landscape Architect prior to the Contractor beginning vegetative control operations.
      a) Removal of weeds, grass and root growth may be completed by hand or through the application of "pre-emergent" and "post emergent" herbicides as approved by the owner. All herbicide applications shall be performed by certified pesticide applicators in accordance with the requirements of Section 601. Additional weeding may be performed when requested by the owner or engineer and with written agreement from both parties. The owner also reserves the right to delete individual weeding cycles at no cost to the owner. The Contractor shall be responsible for replacing plants that are damaged or that die due to the application of herbicide treatments.
      b) When herbicides are used for post emergent weed control, the weeds shall be cut to a height of 6 inches or as recommended by the manufacturer if necessary, prior to applying the herbicide. The Landscape Architect reserves the right to change the frequency or delete specific areas scheduled for weed control. Other pesticides, adjuvants and plant growth regulators may be used when approved by the Landscape Architect.
      c) Turf maintenance which includes grass and other vegetation around individual plant pits, between groups of plant pits that are 15 feet on center or less, and around the perimeter of plant beds shall be cut to a height of approximately 4 inches. For each individual plant pit, group of plant pits, and plant beds, a perimeter extending 5 feet in width shall be maintained around the outermost plant pits and edge of beds where grass and other vegetation is present, and where such areas exist within the right-of-way or construction easement. Mowing shall be per-formed once in each month of May through September. Additional mowing may be performed when requested by the Landscape Architect. The Landscape Architect reserves the right to delete individual mowing cycles when deemed necessary by the Landscape Architect.
   I. Additional Work, including pruning of dead, broken or diseased branches, shall be performed to ensure plant survival as approved or directed by the Landscape Architect.

CONSTRUCTION DOCUMENTS
12-11-15

Weston&Sampson®
273 Dividend Road, Rocky Hill, CT 06067
(860) 513-1473 (800) SAMPSON
www.westonandsampson.com

No.	Date	Dr.By	Ck.By	App.By	Description
					A P P R O V E D

Daniel P. Biggs
REGISTERED LANDSCAPE ARCHITECT
12-11-2015
DATE

STATE OF CONNECTICUT ☆ LICENSED LANDSCAPE ARCHITECT ☆ DANIEL P. BIGGS NO. 13296

TOWN OF GREENWICH – DEPARTMENT OF PUBLIC WORKS
RITCH AVENUE WEST, GREENWICH, CONNECTICUT
BYRAM PARK POOL REPLACEMENT
LANDSCAPE & HARDSCAPE DETAILS 2

CADD NO.	SCALE:	CONTRACT:	JOB NO.	DR.BY	DSN.BY	CHK.BY	APP.BY
GREENWICH	NONE	–	2130336	J.W.G.	J.W.G.	J.S.P.	C.B.W.

FILE NO.
L4.01
SHEET – OF –

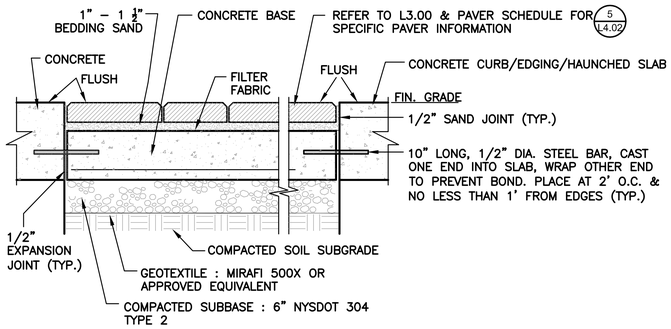

WHEN CONCRETE IS NOT THE EDGE RESTRAINT FOR PAVERS – USE BLACK ANODIZED ALUMINUM EDGE RESTRAINT "PERMALOC" OR APPROVED EQUIVALENT. INSTALL 10" SPIRAL STEEL SPIKE AT MANUFACTURER'S RECOMMENDED SPACING. ENSURE ADJACENT LAWN IS EVEN WITH INSTALLED PAVERS.

PREPARE SUBGRADE TO POSITIVELY DRAIN, REFLECTING SURFACE DRAINAGE PATTERNS. EXPANSION JOINTS IN CONCRETE BASE AT 25' O.C.

1 PAVERS OVER CONCRETE DETAIL
N.T.S.

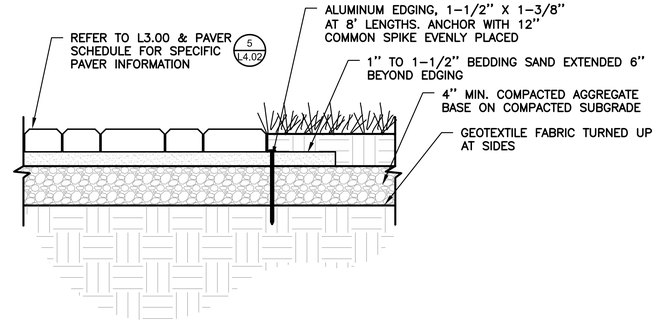

2 PAVER EDGING DETAIL
N.T.S.

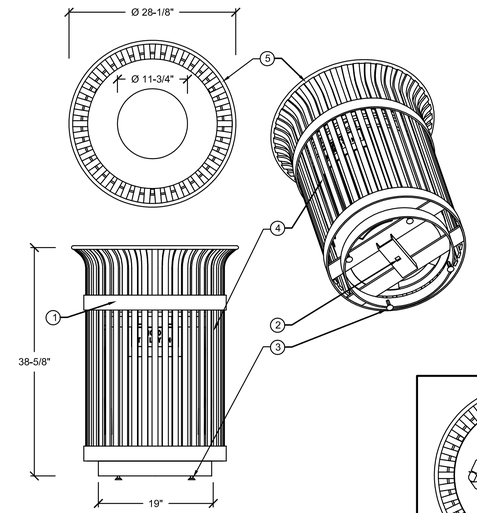

1. (2) 1/4" x 2-1/2" HORIZONTAL SOLID STEEL BANDS
2. 3/4" SQUARE CENTER ANCHOR BOLT HOLE
3. (4) LEVELING FEET WITH A 3/8" DIAMETER THREADED STEEL SHAFT
4. (42) 3/8" X 1" VERTICAL SOLID STEEL BARS
5. 5/8" SOLID STEEL TOP RING
6. RECYCLING LID WITH 18" STENCIL GAUGE
7. RECYCLING PLAQUE AFFIXED TO OUTSIDE OF SOLID STEEL BANDS

NOTES:
A. MATERIALS
1. MANUFACTURER: VICTOR STANLEY, INC.
2. TYPE: IRONSITES SERIES S-42, 36-GALLON/ S-42 RECYCLE LID AND PLAQUE, 36-GALLON
3. COLOR: TRASH - GREEN RECYCLING - BLUE
4. FINISH: STEEL SHOTBLASTED, ETCHED, PHOSHATIZED, PREHEATED, AND ELECTROSTATICALLY POWDER-COATED WITH T.G.I.C POLYESTER POWDER COATINGS
B. TOP LOAD LIDS ARE SECURED WITH VINYL COATED GALVANIZED STEEL AIRCRAFT CABLE. CABLE IS LOOPED AROUND WELDED IN PLACE ATTACHMENT BRACKETS AND CRIMPED IN PLACE.
C. SIDE DOOR LID IS RIVITED IN PLACE.
D. PRODUCT MUST BE PERMANENTLY AFFIXED TO GROUND WITH ANCHOR BOLTS.
E. PLASTIC INNER LINERS ARE MOLDED ON TOOLING
F. INSTALLATION TO BE COMPLETED IN ACCORDANCE WITH MANUFACTURERS SPECIFICATIONS.

3 TRASH/ RECYCLING RECEPTACLE
1" = 1'

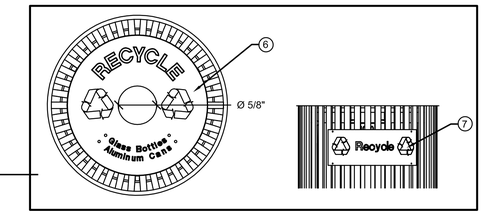

RECYCLING RECEPTACLE DETAIL

PAVER SCHEDULE

KEY	TYPE	UNIT DIMENSIONS	COLOR	PATTERN
a	TECHO–BLOC BLU 60MM SLATE SLABS OR EQUIVALENT	THICKNESS: 2–3/8" WIDTH: 13" LENGTHS: 6–1/2", 13", 19–1/2"	SANDLEWOOD	MODULAR PATTERN–01
b	TECHO–BLOC VILLAGIO PAVERS OR EQUIVALENT	THICKNESS: 2–3/8" WIDTH: 5–1/8" LENGTHS: 5–1/8", 6–5/16", 7–5/16", 8–7/16"	MOJAVE BEIGE	HERRINGBONE PATTERN–04
c	TECHO–BLOC VICTORIEN 60MM PAVERS OR EQUIVALENT	THICKNESS: 2–3/8" WIDTH: 4–1/4" LENGTHS: 8–1/2"	RED & BLACK	HERRINGBONE PATTERN–03
d	BELGARD BERGERAC CIRCLE PAVERS OR EQUIVALENT	THICKNESS: 2–3/8" WIDTH: 5–1/2" LENGTHS: VARYING (TO FIT RADIAL PATTERN)	SEDONA BLEND	RADIAL

NOTE: 1.) PAVERS TO BE INSTALLED ACCORDING TO SPECIFIC MANUFACTURER SPECIFICATIONS. TYPICAL INSTALLATION DETAILS: 1 L4.02, 2 L4.02

2.) PATTERN NUMBERS AND DESCRIPTIONS REFER TO INDIVIDUAL MANUFACTURER SPECIFICATIONS.

5 PAVER SCHEDULE
N.T.S.

1. CROSS MEMBERS OF 1-7/8" TUBULAR STEEL, 1"X1" SOLID STEEL END UNITS
2. (24) 5/8" STEEL RODS
3. BENCH ANCHOR: 1/2" DIA. X 6" NONCORROSIVE SLEEVE ANCHOR WITH ROUND HEAD AT EACH LEG [REFER TO ENLARGEMENT]

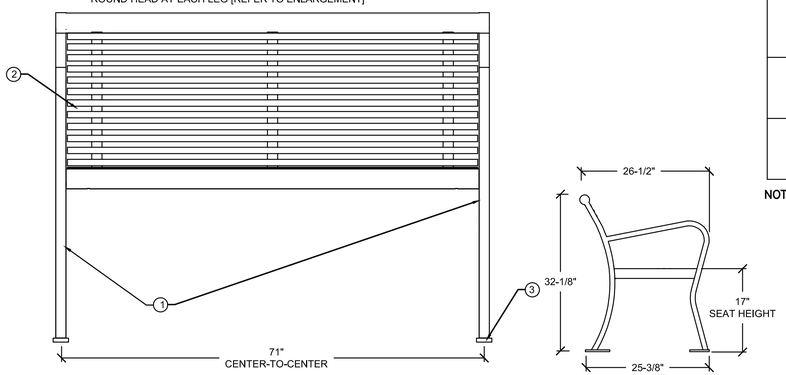

4 BENCH WITH BACK
1" = 1'

NOTES:
A. MATERIALS
1. MANUFACTURER: VICTOR STANLEY, INC.
2. TYPE: PRODUCTION SERIES PRS 112 - 6' LENGTH BENCH
3. COLOR: GREEN
4. FINISH: STEEL SHOTBLASTED, ETCHED, PHOSPHATIZED, PREHEATED, AND ELECTROSTATICALLY POWDER COATED WITH T.G.I.C. POLYESTER POWDER COATED.
B. IT IS NOT RECOMMENDED TO LOCATE ANCHOR BOLTS UNTIL BENCH IS IN PLACE. PRODUCT MUST BE PERMANENTLY AFFIXED TO THE GROUND. CONSULT THE LOCAL CODES FOR REGULATIONS.
C. ANCHOR BOLTS NOT PROVIDED BY MANUFACTURER. PLACE ANCHOR BOLTS THROUGH 1/2" DIA. HOLE DRILL INTO PAVING USING A CARBIDE BIT. FASTEN ANCHOR SNUG AGAINST SITE FURNITURE.
D. INSTALLATION TO BE COMPLETED IN ACCORDANCE WITH MANUFACTURERS SPECIFICATIONS.

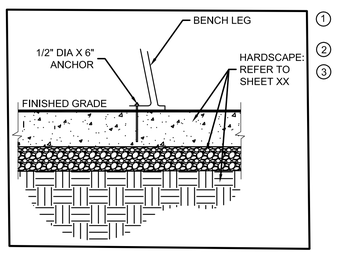

TYPICAL ANCHOR ENLARGEMENT

1. CROSS MEMBERS OF 1-7/8" TUBULAR STEEL, 1"X1" SOLID STEEL END UNITS
2. (24) 5/8" STEEL RODS
3. BENCH ANCHOR: 1/2" DIA. X 6" NONCORROSIVE SLEEVE ANCHOR WITH ROUND HEAD AT EACH LEG [REFER TO ENLARGEMENT]

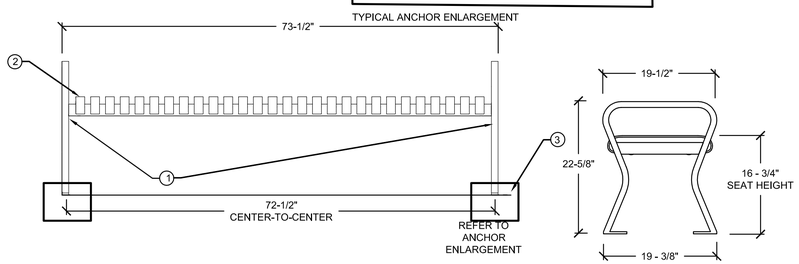

6 BACKLESS BENCH
1" = 1'

NOTES:
A. MATERIALS
1. MANUFACTURER: VICTORY STANLEY OR APPROVED EQUAL
2. TYPE: CYCLE SENTRY SERIES BRBS-103.STANDARD SURFACE MOUNT
3. COLOR: BLACK
4. FINISH: FINISH: STEEL SHOTBLASTED, ETCHED, PHOSPHATIZED, PREHEATED, AND ELECTROSTATICALLY POWDER COATED WITH T.G.I.C. POLYESTER POWDER COATED
B. IT IS NOT RECOMMENDED TO LOCATE ANCHOR BOLTS UNTIL BIKE RACK IS IN PLACE. PRODUCT MUST BE PERMANENTLY AFFIXED TO THE GROUND. CONSULT THE LOCAL CODES FOR REGULATIONS.
C. INSTALLATION TO BE COMPLETED IN ACCORDANCE WITH MANUFACTURERS SPECIFICATIONS.

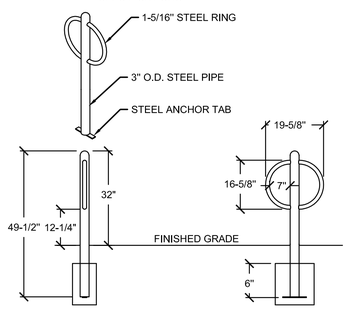

7 BICYCLE "RING" RACK
NTS

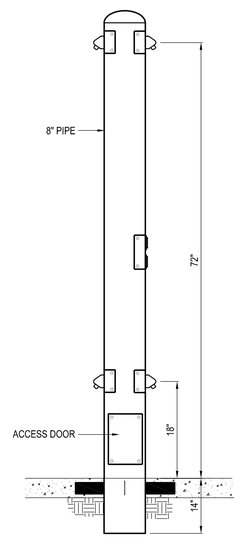

NOTES:
1. FOOTWASH/SHOWER STATION TO BE MODEL SS575 DB, AS MANUFACTURED BY MOST DEPENDABLE FOUNTAINS INC., OR APPROVED EQUAL.
2. STRUCTURE SHALL BE STAINLESS STEEL IN MATERIAL, AND COPPER IN COLOR.
3. CONTRACTOR'S NOTE: FOR PRODUCT AND COMPANY INFORMATION VISIT www.CADdetails.com/info AND ENTER REFERENCE NUMBER 3354-10.8.

8 FOOTWASH/SHOWER STATION
NTS

NOTES:
A. MATERIALS
1. MANUFACTURER: VACKER SIGN OR APPROVED EQUAL.
2. FONT: GARAMOND
3. COLOR: BLACK
4. TEXT SIZE: 8"
5. LINE SPACING: 10"
B. FINAL TEXT TO BE DETERMINED BY OWNER
C. INSTALLATION TO BE COMPLETED IN ACCORDANCE WITH MANUFACTURERS SPECIFICATIONS.

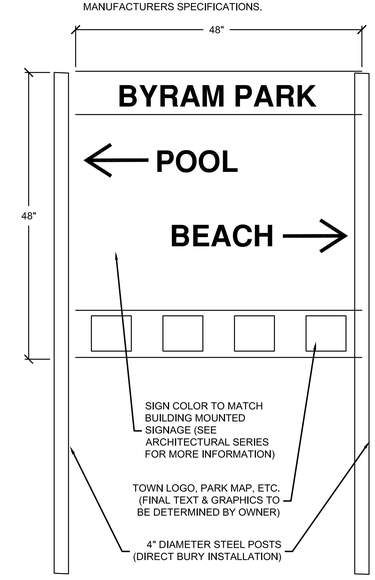

9 FREE STANDING SIGN DETAIL
N.T.S.

CONSTRUCTION DOCUMENTS
12-11-15

Weston&Sampson®
273 Dividend Road, Rocky Hill, CT 06067
(860) 513-1473 (800) SAMPSON
www.westonandsampson.com

No.	Date	Dr.By	Ck.By	App.By	Description
		A	P	P	R O V E D

12-11-2015
DATE
REGISTERED LANDSCAPE ARCHITECT

STATE OF CONNECTICUT LICENSED LANDSCAPE ARCHITECT No. 1008

TOWN OF GREENWICH – DEPARTMENT OF PUBLIC WORKS
RITCH AVENUE WEST, GREENWICH, CONNECTICUT
BYRAM PARK POOL REPLACEMENT
LANDSCAPE & HARDSCAPE DETAILS 3

CADD NO.	SCALE:	CONTRACT:	JOB NO.	DR.BY	DSN.BY	CHK.BY	APP.BY
GREENWICH	NONE	–	2130336	J.W.G.	J.W.G.	J.S.P.	C.B.W.

L4.02
FILE NO.
SHEET – OF –

SIGNAGE SPECIFICATION

PART 1 - GENERAL

1.1 RELATED DOCUMENTS:

A. Attention is directed to Bidding and Contract Requirements, General, and Supplementary Requirements, which are hereby made a part of this Section.

1.2 DESCRIPTION OF WORK:

A. Extent of site signage as shown on design documents.

1.3 SUBMITTALS

A. Shop Drawings: Submit complete shop drawings for each sign. Shop drawings shall consist of plans, elevations and sections showing all sides of signage. Drawings shall cover fabrication including, but not limited to: fasteners, mounting, internal construction, footings, lighting, LED signs, engineering data, and erection of signage.

B. Copy: Submit to scale proofs for layout of all text lettering and symbols indicating styles, dimensions, and colors. All colors, copy, symbols, and graphics shall be approved by Landscape Architect prior to production.

C. Color/Finish Samples: For each type of exposed finish required, submit two (2) - 4" x 4" minimum size samples of same thickness and material indicated for the work of each paint, stain and vinyl color finish .

D. Submit fabrication and installation schedule that includes lead times identifying artwork and other Owner directed materials or decisions are needed to meet the project schedule.

E. Maintenance instructions and product specifications for all sign components including finishes, electrical, lighting, LED signs, and etc. shall be provided to Owner upon completion of accepted work.

1.4 QUALITY ASSURANCE

A. Design Criteria

1. Building Code: All work shall be performed in accordance with the latest Building Code, ASCE 7-05 and all local requirements.
2. Design Loads:

A. Gravity Loads: Framing system has been designed to support specific items shown on drawings when assembled in accordance with drawings. No additional dead loads or live loads may be placed on structures.

B. Wind Load: Design Wind Pressure: 20 PSF (Wind on Signs)

C. Details on drawings indicate a construction approach for the proposed signs, but do not include all detailing or information required for the complete structural integrity of the signs. Written dimensions shall be followed over scaled dimensions. It shall be the responsibility of the fabricator to perform the complete structural design of the signs and to incorporate all the safety features necessary to adequately support the sign for its intended use. Designs that meet or exceed industry and local code engineering requirements will be required. The sign fabricator shall submit engineer stamped calculations for components that affect the structural design.

D. Unless otherwise directed by Owner, design to withstand severe abuse and theft vandalism, but not less than equivalent of resisting simple hand implements and tools (screwdrivers, knives, coins, keys and similar items) and adult physical force. All hardware and fasteners shall be vandal resistant.

1.5 WARRANTY

A. Signage Warranty: Contractor shall provide a five (5) year full replacement warranty for all sign products to the Owner to warrant all work against failure because of faulty materials or workmanship from the date of acceptance from the Owner. Contractor shall provide a written warranty dated with the approved acceptance date with the following, but not limited to:

1. Fading, bubbling, cracking, warping, peeling, delaminating, chalking, rusting, or other disintegration of sign panel, bases, graphics, or of the edges.
2. Corrosion of sign panels, brackets and mounting hardware, fasteners, posts or other support pieces.
3. Sign foundation or support failure causing signage to become crooked or not plumb and true as originally accepted.

PART 2 - PRODUCTS

2.1 MATERIALS

A. Aluminum Panels/ Posts: 6063T5, minimum wall thickness 0.125" with smooth, rounded corners and 3M 1050 Protective Overlay and Anti-Graffiti film.

1. Duranodic bronze finish unless noted otherwise.
2. Provide compatible fasteners/ hardware per manufacturers guidelines.
3. Coat sections embedded in concrete with a protective coating of bituminous paint. Refer to colors and materials sheets for specifications.
4. Suppliers:

A. Howard Industries: www.howardindustries.com, 800-458-0591.
B. iSigns, Inc: Bill Burrows, 866-437-3040, billb@isigninc.com.
C. Vacker Signs, Inc.: Roseville, MN, www.vackersign.com
D. or Accepted Equivalent.

B. Concrete: Provide concrete consisting of Portland Cement, ASTM C-150, aggregates ASTM C-33, and clean water. Mix materials to obtain concrete with a minimum 28-day compressive strength of 3,000 psi using at least 5 sacks of cement per cu. yd. All concrete shall be mixed, transported, and placed in accordance with ACI Standards 318, 304, and 301.

1. Air content 4%-6%, slump 4" to 6".
2. No chlorides allowed.
3. Use only aggregates than are not susceptible to alkali-silica reaction (ASR).
4. Cover and wet cure for 4 days.
5. Dovetail slots: 1304, stainless steel by Wire-bond or accepted equivalent.

C. Reinforcing steel for concrete:

1. ASTM A 615, Grade 60.
2. Concrete cover for reinforcement shall be as follows:
3. Concrete placed against earth: 3 inches.
4. Formed surface: 1 ½ inches.

D. Tubular Steel Posts:

1. 3 inch x ¼ inch tubular steel thick square perforated post, ASTM A1011 or ASTM A653 Grade 50.
2. Smooth powder coat finish. Refer to colors and materials sheets for specifications.
3. Compatible fasteners.
4. Coat sections embedded in concrete with a protective coating of bituminous paint.

E. Fasteners

1. Stainless steel. Anchor bolts into concrete shall be either cast-in-place or post-installed ½" diameter grade 316 stainless steel, embedded 6". If post-installed, use Hilti Stainless Steel Rods with Hilti Hit HY150 Max Adhesive or accepted equivalent. Use rod with stainless steel washers, and nuts. Provide leveling nuts and washers under base plate, and install in accordance with manufacturers recommendations.

F. Paint:

1. Premium acrylic polyurethane with matte or low luster finish with UV and graffiti inhibitors.
2. Benjamin Moore paint and stain products as provided in design documents or accepted equivalent. Refer to colors and materials sheets for specifications.
3. All colors to be submitted for review and approval during mock ups and submittal process, refer to colors and materials for specifications.

G. Vinyl Lettering:

1. Vinyl lettering, symbols, and trim shall be 3M ScotchLite brand film or accepted equivalent. Finished emblems shall be pre-masked.
2. All colors to be submitted for review and approval during mock ups and submittal process. Refer to colors and materials sheets for specifications.
3. Reflective (Non-Traffic Signs) vinyl lettering, symbols, and trim shall be 3M ScotchLite reflective sheeting, 580 series or accepted equivalent.
4. Retro-Reflective (Traffic Signs) vinyl lettering, symbols, and trim shall be 3M ScotchLite high intensity vinyl, 3870 series or accepted equivalent, as required by the Manual on Uniform Traffic Control Devices (MUTCD).

2.2 FABRICATION

A. Shop fabrication and tolerances shall conform to the standards of the industry. All items shall be shop fabricated so far as practicable. Perform high-quality, professional workmanship. Attach materials with sufficient strength, number, and spacing not to fail until materials joined are broken or permanently deformed. Disassemble units only as necessary for shipping and handling limitations. Clearly mark units for reassembly and coordinated installation.

B. Use materials of size and thickness shown, or if not shown, of required size, grade, and thickness to produce strength and durability in finished product. Shop-paint all items.

C. Weld corners and seams continuously; grind exposed welds smooth and flush.

D. Form exposed connections with hairline, flush joints; use concealed fasteners where possible.

E. Separate dissimilar metals with permanent resilient plastic isolator.

F. Copy Application: Sign copy shall be crisp, sharp, clean, and free from "ticks", discontinuous curves, line waver, and similar type imperfections.

1. Letterforms shall conform to prescribed proportions.
2. Messages shall be computer generation with photo typositor or equivalent quality.

G. Routed Copy: Cutting and routing shall be done in such a manner that edges and corner of finished letter forms and symbols shall be sharp and true. Forms with nicked, cut, ragged, rounded (positive and negative) corners, and similar disfigurements will not be acceptable. Forms shall be aligned so as to maintain a base line parallel to the sign format, with margins and layout as indicated on design drawings and approved shop drawings. Vertical strokes shall be plumb.

H. Cut-Out Copy: All letter cut-outs shall be made from material and gauge as indicated on drawings. Cutting shall be done in such manner that edges and corners of finished letterforms will be sharp and true. Letterforms with nicked, cut, ragged, round (positive or negative) corners and similar disfigurements will not be acceptable.

I. Vinyl Letters: Vinyl letters, numbers, and symbols, shall be die-cut unless an alternate process is approved by Owner prior to fabrication. Copy shall be prespaced with 3-M series 2-applcation tape, prior to installation on sign. No exceptions.

PART 3 - EXECUTION

3.1 INSTALLATION - GENERAL

A. Contractor must examine the conditions under which signs are to be installed and notify the Landscape Architect if conditions are detrimental to the proper and timely completion of the work. Do not proceed with the work until unsatisfactory conditions have been corrected in a manner acceptable to the Landscape Architect.

B. Verify and stake exact sign locations and existing utilities prior to on-site walk through with Landscape Architect for all sign locations. Contractor agrees to be fully responsible for damages which might be occasioned by failure to exactly locate and preserve existing utilities. Contractor shall be responsible for contacting Miss Utility phone: 811 or va811.com to locate all utilities prior to proceeding with any construction or land disturbance.

C. Contractor shall notify Landscape Architect of any conditions that may be adversely affect satisfactory installation of signage or if soil conditions are other than virgin soil.

D. Except as indicated otherwise on the drawings, install signage plumb, level, square and true to line.

E. Securely anchor signage in proper location using foundations, anchors, anchorages, fasteners or other methods approved on shop drawings. All anchors and fasteners shall be appropriate to the anchorage condition and per sign fabrication's engineer.

F. After final electrical connections have been made, test all electrical systems to assure that all are in proper working order.

G. Coordinate work, access to site, staging, and traffic control with Owner.

3.2 APPLICATION OF PAINT FINISH

A. Properly prepare aluminum surfaces by pretreatment of etching/wash type as recommended by paint manufacturer. Prime the epoxy primer per paint manufacturer instructions.

B. Apply materials in an environment most favorable for producing best quality work.

C. Apply materials by spray so that:

1. Finish surfaces shall be free of streaks, laps, runs, or pile-up of paints, with all surfaces uniformly covered.
2. Surfaces with overspray are not acceptable.

D. Unless specified or directed otherwise, provide matte or low luster finish for all surfaces.

E. Unless specified or directed otherwise, provide 'clear coat' finish over all exposed, finish painted surfaces consisting of a two-component catalytic, clear, acrylic polyurethane enamel with ultraviolet inhibitors.

3.3 CLEANING OF PREMISES

A. The contractor, at all times, shall keep the premises free from accumulation of waste materials or rubbish caused by his operations. At the completion of the work, he shall remove all his waste materials and rubbish from and about the project as well as his tools, construction equipment, machinery and surplus materials.

B. Contractor shall establish and enforce a daily system for collecting and disposing of waste materials from construction areas and elsewhere on site.

C. The contractor may not store tools, construction equipment, machinery, and surplus materials on-site without prior approval by Landscape Architect or Owner.

3.5 ACCEPTANCE

A. Prior to final completion, Contractor shall conduct an inspection of exposed surfaces and all work areas, to verify that the entire work is clean.

B. Upon completion of final cleanup, Contractor shall contact Landscape Architect or Owner for final inspection and acceptance.

C. Any items of work identified as requiring corrections must be provided to the contractor in writing as a punch list and must be completed before the contractor is relieved of responsibility for the work.

D. Once all items identified as requiring corrections on punch list pre-final inspection have been completed, the contractor will be notified in writing of final acceptance. The date of the final acceptance is the date the contractor is relieved of further maintenance.

CONSTRUCTION DOCUMENTS
12-11-15

Weston&Sampson®
273 Dividend Road, Rocky Hill, CT 06067
(860) 513-1473 (800) SAMPSON
www.westonandsampson.com

No.	Date	Dr.By	Ck.By	App.By	Description

A P P R O V E D

12-11-2015
REGISTERED LANDSCAPE ARCHITECT
DATE

STATE OF CONNECTICUT ☆ LICENSED LANDSCAPE ARCHITECT
DANIEL P. BIGGS
NO. 1329(0)

TOWN OF GREENWICH – DEPARTMENT OF PUBLIC WORKS
RITCH AVENUE WEST, GREENWICH, CONNECTICUT

BYRAM PARK POOL REPLACEMENT

LANDSCAPE & HARDSCAPE DETAILS 4

CADD NO.	SCALE:	CONTRACT:	JOB NO.	DR.BY	DSN.BY	CHK.BY	APP.BY
GREENWICH	NONE	–	2130336	J.W.G.	J.W.G.	J.S.P.	C.B.W.

L4.03

FILE NO.

SHEET – OF –

1.0 - GENERAL

1.01 THE STRUCTURAL DRAWINGS SHALL BE USED IN CONJUNCTION WITH ALL OTHER CONTRACT DRAWINGS AND SPECIFICATIONS. REFER TO CIVIL, ARCHITECTURAL, MECHANICAL, PLUMBING, AND ELECTRICAL DRAWINGS FOR LOCATION, DIMENSIONS, AND DETAILS OF OPENINGS, SLEEVES, EMBEDMENTS, INSERTS, PADS, CURBS, DEPRESSIONS, ANCHOR BOLTS, AND OTHER PROJECT REQUIREMENTS NOT SHOWN ON STRUCTURAL DRAWINGS.

1.02 THE CONTRACTOR IS RESPONSIBLE FOR CHECKING, COORDINATING AND VERIFYING ALL DIMENSIONS IN THE FIELD PRIOR TO COMMENCING WORK. THE CONTRACTOR SHALL IMMEDIATELY REPORT ANY DISCREPANCY TO THE ARCHITECT AND ENGINEER.

1.03 THE CONTRACTOR IS RESPONSIBLE FOR VERIFYING IN THE FIELD THE EXISTENCE AND LOCATION OF OVERHEAD, BURIED AND/OR EMBEDDED UTILITIES, AND DETERMINING LOCATIONS OF ALL EMBEDDED MECHANICAL, ELECTRICAL AND PLUMBING SYSTEMS AFFECTED BY THE WORK OF THIS CONTRACT.

1.04 ALL WORK IS TO CONFORM WITH THE FOLLOWING CODES AND STANDARDS:

(A) CONNECTICUT STATE BUILDING CODE WITH 2005 SUPPLEMENTS
(B) INTERNATIONAL BUILDING CODE, (IBC 2003)
(C) "BUILDING CODE REQUIREMENTS FOR STRUCTURAL CONCRETE" - AMERICAN CONCRETE INSTITUTE (ACI 318-02)
(D) "MANUAL OF STEEL CONSTRUCTION" - AMERICAN INSTITUTE OF STEEL CONSTRUCTION (AISC 360)
(E) "STRUCTURAL WELDING CODE - STEEL" - AMERICAN WELDING SOCIETY (AWS D1.1-92)
(F) "MINIMUM DESIGN LOADS FOR BUILDINGS AND OTHER STRUCTURES" - AMERICAN SOCIETY OF CIVIL ENGINEERS, (ASCE 7-02)

FOR ADDITIONAL CODES AND STANDARDS REFER TO SPECIFICATIONS.

1.05 THE CONTRACTOR SHALL NOTIFY THE ARCHITECT AND ENGINEER OF UNANTICIPATED CONDITIONS THAT MAY BE UNCOVERED DURING CONSTRUCTION.

1.06 PERMANENT STRUCTURAL ELEMENTS TO BE DESIGNED IN ACCORDANCE WITH PERFORMANCE SPECIFICATIONS INCLUDE, BUT ARE NOT LIMITED TO, THE FOLLOWING;

(A) MISC. ARCH COMPONENT SEISMIC SUPPORTS
(B) MISC. MECHANICAL AND ELECTRICAL COMPONENT AND SYSTEM SEISMIC SUPPORTS
(C) LIGHT GAUGE COLD FORMED STEEL FRAMING
(D) PREFABRICATED WOOD TRUSSES

FOR PERFORMANCE DESIGN REQUIREMENTS OF ELEMENTS LISTED ABOVE, REFER TO ADDITIONAL NOTES ON THESE SHEETS AND IN THE TECHNICAL SPECIFICATIONS. ALL DESIGN SUBMITTAL DRAWINGS AND CALCULATIONS SHALL BE CERTIFIED, SIGNED AND SEALED BY A PROFESSIONAL STRUCTURAL ENGINEER REGISTERED IN THE STATE OF CONNECTICUT.

1.07 STRUCTURAL REQUIREMENTS TO ACCOMMODATE FIXED EQUIPMENT, INCLUDING BUT NOT LIMITED TO ROOF TOP UNITS ARE INCIDENTAL TO THE REQUIREMENTS OF A SPECIFIC EQUIPMENT MANUFACTURER. ALL WORK SHALL CONFORM TO APPROVED EQUIPMENT MANUFACTURER'S SHOP DRAWINGS AND INSTALLATION INSTRUCTIONS. THE CONTRACTOR SHALL SUBMIT TO THE ENGINEER FOR APPROVAL ANY REQUIRED MODIFICATIONS TO ACCOMMODATE APPROVED EQUIPMENT DRAWINGS. SUCH MODIFICATIONS SHALL BE MADE AT NO COST TO THE OWNER.

1.08 DETAILS AND NOTES SHOWN ON STRUCTURAL DRAWINGS SHALL BE APPLICABLE TO ALL PARTS OF THE STRUCTURAL WORK EXCEPT WHERE SPECIFICALLY REQUIRED OTHERWISE BY CONTRACT DOCUMENTS. CONDITIONS NOT SPECIFICALLY SHOWN SHALL BE SIMILAR TO THOSE SHOWN FOR LIKE CONDITIONS AS DETERMINED BY THE ENGINEER.

1.09 TESTING AND INSPECTION OF STRUCTURAL WORK SHALL BE THE RESPONSIBILITY OF THE CONTRACTOR. THE COSTS FOR TESTING AND INSPECTION WILL BE PAID BY THE CONTRACTOR. FOR ADDITIONAL INFORMATION CONCERNING TESTING AND INSPECTION, REFER TO SECTION 01450 OF THE TECHNICAL SPECIFICATIONS.

1.10 THE CONTRACTOR SHALL DESIGN AND PROVIDE ALL REQUIRED SHORING AND TEMPORARY BRACING TO RESIST FORCES ON THE STRUCTURE THROUGHOUT THE CONSTRUCTION PERIOD.

1.11 SUBMIT SHOP DRAWINGS, WITH AMPLE TIME FOR ENGINEER'S REVIEW AND APPROVAL, FOR STRUCTURAL ELEMENTS, INCLUDING STRUCTURAL STEEL AND PRECAST CONCRETE.

2.0 DESIGN LOADS

* STRUCTURAL DESIGN LOADS ARE BASED ON THE CONNECTICUT STATE BUILDING CODE.

2.01 DEAD LOADS
WEIGHT OF BUILDING COMPONENTS = ACTUAL WEIGHT

2.01 SNOW LOADS
GROUND SNOW LOAD, Pg = 30 PSF
SNOW EXPOSURE FACTOR, Ce = 1.1
SNOW LOAD IMPORTANCE FACTOR, Is = 1.0
THERMAL FACTOR, Ct = 1.0

2.03 WIND LOADS
BASIC WIND SPEED, V = 100 MPH
IMPORTANCE FACTOR, Iw = 1.00
BUILDING CATEGORY II
EXPOSURE C
COMPONENTS AND CLADDING - COMPONENTS AND CLADDING ELEMENTS NOT SPECIFICALLY DESIGNED ON THESE DRAWINGS SHALL BE DESIGNED ACCORDING TO THE WIND PRESSURES STIPULATED BY THE CONNECTICUT STATE BUILDING CODE.

2.04 EARTHQUAKE LOADS
SEISMIC IMPORTANCE FACTOR, Ie = 1.00
MAPPED SPECTRAL RESPONSE ACCELERATIONS, S_s = 0.336
MAPPED SPECTRAL RESPONSE ACCELERATIONS, S_1 = 0.078
SITE CLASS = C
SPECTRAL RESPONSE COEFFICIENT, S_{DS}= 0.269
SPECTRAL RESPONSE COEFFICIENT, S_{D1}= 0.078
SEISMIC DESIGN CATEGORY = B
BASIC SEISMIC-FORCE-RESISTING SYSTEM:
BEARING WALL - INTERMEDIATE REINFORCED MASONRY SHEAR WALL
RESPONSE MODIFICATION FACTOR, R = 3.5
SEISMIC RESPONSE COEFFICIENT, Cs = 0.077
ANALYSIS PROCEDURE USED: EQUIVALENT LATERAL FORCE

2.05 LIVE LOADS

A. SLAB ON GRADE = 100 PSF
B. ATTIC FLOOR (CEILING) = 20 PSF U.N.O.
C. CATWALKS (MAINTENANCE ACCESS ONLY) = 40 PSF

3.0 - FOUNDATIONS

3.01 THE SUBSURFACE CONDITIONS DESCRIBED IN THE DRAWINGS, SPECIFICATIONS, TEST BORINGS AND TEST PITS ARE INCLUDED ONLY TO ASSIST THE CONTRACTOR DURING BIDDING AND SUBSEQUENT CONSTRUCTION AND REPRESENT CONDITIONS ONLY AT THESE SPECIFIC LOCATIONS AT THE TIME THEY ARE MADE.

3.02 THE ALLOWABLE BEARING PRESSURE FOR FOUNDATIONS IS 5,000 PSF. REFER TO THE GEOTECHNICAL REPORT BY WESTON & SAMPSON DATED JULY 15, 2014 FOR ADDITIONAL DESIGN CRITERIA AND RECOMMENDATIONS.

3.03 THE CONTRACTOR SHALL DESIGN AND PROVIDE ALL TEMPORARY EARTH SUPPORT, SHORING AND BRACING REQUIRED TO PERFORM THE WORK IN ACCORDANCE WITH OSHA, STATE AND LOCAL REQUIREMENTS.

3.04 THE CONTRACTOR SHALL DESIGN AND PROVIDE SHEETING, SHORING, BRACING, AND/OR UNDERPINNING IN ORDER TO PROTECT EXISTING UTILITIES FROM EXCESSIVE MOVEMENTS DURING THE CONSTRUCTION PERIOD, IN ACCORDANCE WITH OSHA, STATE & LOCAL REQUIREMENTS.

3.05 THE CONTRACTOR SHALL CARRY OUT CONTINUOUS CONTROL OF SURFACE AND SUBSURFACE WATER. DEWATER ANY AREAS REQUIRING EXCAVATION IN ADVANCE OF PERFORMING EXCAVATION. MAINTAIN GROUNDWATER LEVELS AT LEAST 2 FEET BELOW PLANNED SUBGRADES.

3.06 ALL SUBGRADES, FOUNDATIONS, SLABS OR OTHER CONSTRUCTION TO RECEIVE FILL MATERIALS SHALL BE FREE OF RUNNING OR STANDING WATER PRIOR TO PLACEMENT.

3.07 FOUNDATIONS SHALL BE INSTALLED IN THE GEOMETRY SHOWN IN THE PLANS, ANY ROCK ENCOUNTERED DURING EXCAVATION SHALL BE REMOVED TO CLEAR THE REQUIRED FOUNDATION GEOMETRY.

3.08 ALL SPREAD FOOTING BEARING SURFACES SHALL BE EXCAVATED BY EQUIPMENT WITH A SMOOTH, TOOTHLESS CUTTING EDGE.

4.0 - CAST IN PLACE CONCRETE

4.01 CONCRETE WORK SHALL CONFORM TO "BUILDING CODE REQUIREMENTS FOR REINFORCED CONCRETE" (ACI 318-02) AND "SPECIFICATIONS FOR STRUCTURAL CONCRETE FOR BUILDINGS" (ACI 301-99).

4.02 CONCRETE SHALL BE CONTROLLED CONCRETE, PROPORTIONED, MIXED AND PLACED IN THE PRESENCE OF A REPRESENTATIVE OF AN APPROVED TESTING AGENCY.

4.03 UNLESS NOTED OTHERWISE, CONCRETE SHALL BE NORMAL WEIGHT AND HAVE A MINIMUM 28 DAY COMPRESSIVE STRENGTH AS FOLLOWS:

(A) SPREAD FOOTINGS, FOUNDATION WALLS, PERIMETER WALLS: 4000 PSI
(B) SLABS ON GRADE: 4000 PSI
(C) ALL OTHER STRUCTURAL CONCRETE: 4000 PSI

4.04 ALL PERMANENTLY EXPOSED VERTICAL AND HORIZONTAL CONCRETE SURFACES SHALL BE TREATED OR SEALED IN ACCORDANCE WITH PROJECT SPECIFICATIONS.

4.05 CONCRETE WORK SHALL BE COORDINATED WITH ARCHITECTURAL, MECHANICAL, PLUMBING, ELECTRICAL WORK, AND ALL EQUIPMENT. THE CONTRACTOR SHALL VERIFY INSTALLATION AND LOCATIONS OF ALL EMBEDDED ITEMS INCLUDING BUT NOT LIMITED TO INSERTS, ANCHOR BOLTS, DOWELS, BLOCKOUTS, SLEEVES, EMBEDDED PIPING, AND EMBEDDED CONDUIT PRIOR TO CONCRETE PLACEMENT.

4.06 FOR STRUCTURAL ELEMENTS, THE LOCATION AND MAXIMUM SPACING OF VERTICAL JOINTS SHALL BE AS FOLLOWS:

ELEMENT	JOINT TYPE	SPACING, FT.	LOCATION
FOUNDATION WALL	CONTRACTION	30	FACE OF PILASTER
FOUNDATION WALL	CONSTRUCTION	60	

SUBMIT JOINT LOCATIONS AND DETAILS FOR APPROVAL.

4.07 CONCRETE EXPOSED TO WEATHER IN THE FINISHED PROJECT SHALL BE AIR ENTRAINED PER SPECIFICATIONS REQUIREMENTS. INTERIOR SLABS ON GRADE SHALL NOT USE AIR ENTRAINING ADMIXTURES.

4.08 FOR SLAB ON GRADE, LOCATE CONSTRUCTION OR CONTROL JOINTS ALONG COLUMN LINES. PROVIDE JOINTS AT 20 FT. MAX SPACING. SUBMIT JOINT LOCATIONS AND DETAILS FOR APPROVAL. SEE DETAIL ON S0.01.

4.09 A MINIMUM OF 72 HOURS SHALL ELAPSE BETWEEN ADJACENT CONCRETE PLACEMENTS.

4.10 CONCRETE SLABS SHALL BE PLACED SO THAT THE SLAB THICKNESS IS AT NO POINT LESS THAN THAT INDICATED ON THE DRAWINGS.

4.11 PROVIDE A ¾" CHAMFER ON ALL VERTICAL AND HORIZONTAL CORNERS EXPOSED TO VIEW UNLESS NOTED OTHERWISE.

4.12 PROVIDE A VAPOR BARRIER UNDER FLOOR SLABS ON GRADE SEE SPECIFICATIONS AND DETAILS FOR ADDITIONAL REQUIREMENTS.

4.13 CONCRETE FLOOR SURFACES SHALL BE FINISHED AS FOLLOWS:

(A) SLABS-ON-GRADE: STEEL TROWEL FINISH

4.14 ALL CONCRETE SHALL BE WATER CURED UNLESS OTHERWISE AUTHORIZED BY THE ENGINEER.

4.15 CONCRETE SURFACES SHALL BE TREATED AS FOLLOWS:PREPARATION FOR ALL SURFACES SHALL COMPLY WITH THE PROJECT SPECIFICATIONS AND PRODUCT MANUFACTURERS INSTALLATION REQUIREMENTS.

(A) SLABS-ON-GRADE: LIQUID-APPLIED HARDENER/SEALER (APPLIED IN TWO APPLICATIONS) IN ALL AREAS NOT TO RECEIVE A FLOOR COVERING. COORDINATE PRODUCT DATA WITH RESILIENT FLOORING CONTRACTOR TO ENSURE COMPATIBILITY WITH FLOOR ADHESIVES.

5.0 - CAST IN PLACE CONCRETE REINFORCEMENT

5.01 REINFORCEMENT DETAILING, FABRICATION, AND ERECTION SHALL CONFORM TO "ACI DETAILING MANUAL" - SP-66, "CRSI MANUAL OF STANDARD PRACTICE".

5.02 STEEL REINFORCEMENT, UNLESS NOTED OTHERWISE, SHALL CONFORM TO THE FOLLOWING:

(A) BARS, TIES, AND STIRRUPS______ASTM A615 GRADE 60
(B) WELDED WIRE FABRIC______ASTM A185, FLAT SHEETS FOR FLOOR SLABS.

5.03 REINFORCING STEEL SHALL BE UNCOATED AND DEFORMED.

5.04 MINIMUM CONCRETE PROTECTIVE COVERING FOR REINFORCEMENT, UNLESS REQUIRED FOR FIRE PROTECTION OR NOTED OTHERWISE, SHALL BE AS FOLLOWS:

(A) CONCRETE CAST AGAINST AND PERMANENTLY EXPOSED TO EARTH:___3"
(B) CONCRETE EXPOSED TO EARTH OR WEATHER:
(1) NO. 6 THRU NO. 18 BARS______2"
(2) NO. 5 BAR, W31 OR D31 WIRE AND SMALLER______1½"
(C) SURFACES NOT EXPOSED TO WEATHER OR IN CONTACT WITH GROUND:
(1) SLABS, WALLS, JOISTS:
(a) NO. 14 AND NO 18 BARS______1½"
(b) NO. 11 BARS AND SMALLER______¾"
(2) BEAMS, COLUMNS:
(a) PRIMARY REINFORCEMENT, TIES, STIRRUPS, SPIRALS______1½"

5.05 REINFORCING STEEL SHALL BE CONTINUOUS THROUGH ALL CONSTRUCTION JOINTS, CORNERS, AND INTERSECTIONS UNLESS OTHERWISE NOTED. REINFORCING SHALL BE LAPPED AT NECESSARY SPLICES OR HOOKED AT DISCONTINUOUS ENDS, UNLESS OTHERWISE NOTED.

5.06 FOR REINFORCING STEEL SPLICE LAP LENGTHS REFER TO THE TABLE PROVIDED UNLESS OTHERWISE INDICATED.

5.07 MECHANICAL SPLICES SHALL BE PERMITTED SUBJECT TO APPROVAL BY THE ENGINEER. MECHANICAL SPLICES SHALL DEVELOP AT LEAST 125 PERCENT OF THE SPECIFIED YIELD STRENGTH OF THE BAR. NO WELDED CONNECTIONS ARE PERMITTED.

5.08 WELDED WIRE FABRIC SHALL BE LAPPED (1) SQUARE PLUS (2) INCHES WHERE REQUIRED AND SHALL BE WIRED TOGETHER AT ALL LAPS. WWF SHALL BE SUPPORTED BY CHAIRS AND/OR CARRYING BARS PRIOR TO CONCRETE PLACEMENT.

5.09 REINFORCEMENT SHALL NOT BE TACK WELDED.

5.10 NOTIFY THE TESTING LAB AND ENGINEER A MINIMUM OF 48 HOURS PRIOR TO SCHEDULED CONCRETE PLACEMENT IN ORDER TO ACCOMMODATE INSPECTION OF REINFORCEMENT AND CONCRETE TESTING. NO CONCRETE SHALL BE PLACED WITHIN 48 HOURS OF SUCH NOTIFICATION.

5.11 WHERE REINFORCEMENT IS NOT SHOWN ON DRAWINGS, PROVIDE REINFORCEMENT IN ACCORDANCE WITH APPLICABLE DETAILS AS DETERMINED BY THE ARCHITECT AND ENGINEER. IN NO CASE SHALL REINFORCEMENT BE LESS THAN THE MINIMUM REINFORCEMENT PERMITTED BY THE CODES, NOR LESS THAN THE FOLLOWING:
(A) BEAM STIRRUPS: #3 @12"
(B) BEAM STIRRUP SUPPORTS: 1-#5 AT EACH STIRRUP BEND
(C) FACE REINFORCEMENT IN BEAMS OR PORTIONS OF BEAMS #4@12" EF.
(D) STRUCTURAL SLABS: .0020 GROSS CONCRETE AREA IN EACH DIRECTION
(E) CONCRETE WALLS: .0025 x GROSS CONCRETE AREA IN EACH DIRECTION

5.12 WHERE REINFORCEMENT IS REQUIRED IN SECTION, REINFORCEMENT IS CONSIDERED TYPICAL WHEREVER THE SECTIONS APPLIES.

5.13 WHERE THERE IS CONFLICT BETWEEN LOCATIONS OF COLUMN VERTICAL BARS AND BEAM HORIZONTAL BARS, THE COLUMN BARS SHALL REMAIN IN THEIR DESIGNATED POSITIONS AND BEAM BAR LOCATIONS SHALL BE ADJUSTED.

5.14 DOWELS SHALL MATCH BAR SIZE, NUMBER AND SPACING, UNLESS NOTED OTHERWISE.

6.0 - STRUCTURAL STEEL

6.01 STRUCTURAL STEEL DESIGN, FABRICATION AND ERECTION SHALL CONFORM TO THE AISC "MANUAL OF STEEL CONSTRUCTION", LRFD/ASD 14TH EDITION, AND "SPECIFICATION FOR STRUCTURAL STEEL BUILDINGS" (AISC 360-05); "CODE OF STANDARD PRACTICE FOR STEEL BUILDING AND BRIDGES" (AISC MARCH 18, 2005).

6.02 STRUCTURAL STEEL SHALL BE NEW STEEL CONFORMING TO THE FOLLOWING:

(A) WIDE FLANGE SHAPES:______ASTM A992 OR ASTM A572 GR50.
(B) OTHER STEEL SHAPES, PLATES AND BARS:______ASTM A572 OR ASTM A36.
(C) STRUCTURAL TUBING:______ASTM A500 GR B.

6.03 ANCHOR BOLTS, LEVELING PLATES OR BEARING PLATES SHALL BE LOCATED AND BUILT INTO CONNECTION WORK, PRESET BY TEMPLATES OR SIMILAR METHODS. PLATES SHALL BE SET IN FULL BEDS OF NON-SHRINK GROUT, UNLESS NOTED OTHERWISE.

6.04 ALL WELDED CONNECTIONS SHALL BE MADE BY APPROVED CERTIFIED WELDERS AND SHALL CONFORM TO A.W.S. SPECIFICATIONS AMENDED TO DATE. ELECTRODES SHALL BE E70XX.

6.05 STRUCTURAL STEEL FRAMING SHALL BE WITHIN TOLERANCE BEFORE CONNECTIONS ARE FINALLY BOLTED OR WELDED.

6.06 FIELD CUTTING OF STRUCTURAL STEEL OR ANY FIELD MODIFICATIONS OF STRUCTURAL STEEL SHALL NOT BE MADE WITHOUT PRIOR WRITTEN APPROVAL BY THE ENGINEER FOR EACH SPECIFIC USE.

6.07 STRUCTURAL SHAPES AND THE BEARING PLATES FOR STRUCTURAL SHAPES SHALL RECEIVE ONE COAT OF STANDARD SHOP PRIMER PAINT. PAINT COLOR SHALL MATCH METAL BUILDING PRIMER COLOR UNLESS NOTED OTHERWISE.

6.08 ANCHOR BOLT EMBEDMENT AND ANCHORAGE SHALL CONFORM TO THESE DRAWINGS.

6.09 ANCHOR BOLTS SHALL CONFORM TO ASTM F1554 GRADE 36 UNLESS NOTED OTHERWISE. ANCHOR BOLTS SHALL BE HOT-DIPPED GALVANIZED.

6.11 WELDS SHALL BE ¼" FILLET WELDS MINIMUM UNLESS NOTED OTHERWISE ON THE DRAWINGS.

6.12 ENDS OF COLUMNS AT SPLICES AND AT OTHER BEARING CONNECTIONS SHALL BE 'FINISHED TO BEAR' TO COMPLETE TRUE BEARING.

6.13 PROVIDE STIFFENERS 'FINISHED TO BEAR' UNDER ALL LOAD CONCENTRATIONS ON SUPPORTING MEMBER, OVER COLUMNS, AND WHERE SHOWN ON DRAWINGS.

6.14 PROVIDE TEMPORARY ERECTION BRACING AND SUPPORTS TO HOLD STRUCTURAL STEEL FRAMING SECURELY IN POSITION. SUCH TEMPORARY BRACING AND SUPPORTS SHALL NOT BE REMOVED UNTIL PERMANENT BRACING HAS BEEN INSTALLED AND CONCRETE FLOOR SLABS AHS ATTAINED 75% OF SPECIFIED CONCRETE STRENGTH.

6.15 ALL STEEL EXPOSED TO WEATHER SHALL BE HOT DIPPED GALVANIZED, STEEL EXPOSED TO WEATHER INCLUDES ALL STEEL LOCATED OUTSIDE OF THE VAPOR BARRIER.

7.0 - OMITTED

8.0 - OMITTED

9.0 - MASONRY CONSTRUCTION

9.01 CONCRETE MASONRY (CMU) CONSTRUCTION SHALL CONFORM TO 'BUILDING CODE REQUIREMENTS FOR MASONRY STRUCTURES' (ACI 530-99/ASCE 5-99/TMS402-99), AND TO 'SPECIFICATIONS FOR MASONRY STRUCTURES' (ACI 530, 1-99/ASCE 6-99/TMS 602-99).

9.02 MATERIALS STRENGTH SHALL BE AS FOLLOWS:

(A) CONCRETE MASONRY UNITS (CMU) SHALL CONFORM TO ASTM C-90 OF C-145 GRADE N-1.
(B) MORTAR SHALL CONFORM TO ASTM C-270, TYPE N.
(C) GROUT SHALL CONFORM TO ASTM C-476 FINE OR COARSE.

9.03 MASONRY SHALL HAVE f'm = 1,500 PSI, f'm IS THE COMPRESSIVE STRENGTH OF THE MASONRY AT 28 DAYS AS DETERMINED BY PRISM TESTS, (SEE SPECIFICATIONS.)

9.04 PRIOR TO GROUTING CELLS, BARS AND CELLS MUST BE INSPECTED BY THE TESTING AGENCY.

9.05 THE BASE OF EACH CELL IN WHICH A BAR IS PLACED MUST HAVE A CLEANOUT HOLE.

9.06 THE DESIGN OF REINFORCED MASONRY CONSTRUCTIONS IS BASED ON ALLOWABLE STRESSES PREDICATED ON 'WITH INSPECTION' PROVISIONS, REQUIRING THAT QUALIFIED MASONRY INSPECTION TAKE PLACE ON A CONTINUOUS BASIS WHENEVER MASONRY IS BEING PLACED.

9.07 REINFORCED MASONRY WALLS SHALL HAVE BOND BEAMS AT EACH FLOOR LEVEL, AT THE TOP OF EACH WALL AND SPACED AT 4 FEET ON CENTER VERTICALLY AND SHALL BE CONTINUOUS WITH ALL INTERSECTING BOND BEAMS.

9.08 ANCHORS TO MASONRY WALLS SHALL BE 1" EXPANSION BOLTS OR ANCHOR BOLTS. BOLTS SHALL BE 2" SHORTER THAN WALL THICKNESS, WITH A MAXIMUM LENGTH OF 12".

9.09 BONDING METHODS, TIES, LINTELS AND ACCESSORIES SHALL BE APPROVED BY THE ARCHITECT. ANCHORS SHALL ONLY BE INSTALLED IN FULLY GROUTED CELLS OF CONCRETE MASONRY.

9.10 MASONRY OPENINGS MORE THAN 16" WIDE REQUIRE APPROVED LINTELS. (SEE LINTEL SCHEDULE)

9.11 MASONRY OPENINGS FOR UTILITIES ARE TO BE CLOSED UP WITH NEW MASONRY WORK AROUND THE UTILITY AND PROPERLY FIRESTOPPED WITH MATERIAL SPECIFIED BY ARCHITECT'S DRAWINGS AND SPECIFICATIONS.

9.12 PROVIDE AND INSTALL LINTELS FOR OPENINGS IN ACCORDANCE WITH THE SCHEDULE PROVIDED IN THE DRAWINGS. (SUBMIT SHOP DRAWINGS OF CONNECTION DETAIL FOR APPROVAL). UNLESS NOTED OTHERWISE PROVIDE ONE L5x3 1/2x3/8 GALVANIZED LINTEL ANGLE FOR EACH 4" WIDTH OF MASONRY UP TO A SPAN OF 6 FEET (MASONRY OPENING) WITH 6" MINIMUM BEARING AT EACH END.

9.13 WALL BEARING BEAMS SHALL HAVE BEARING PLATES OF SUFFICIENT SIZE TO DEVELOP THE MAXIMUM END REACTION OF THE BEAM. PLATES SHALL BEAR ON CONCRETE FILLED BLOCKS HAVING A COMPRESSIVE STRENGTH OF 2,500 PSI.

9.14 FILL CORES OF CONCRETE BLOCKS UNDER ALL BEARING PLATES WITH CONCRETE FOR A WIDTH EQUAL TO 3 TIMES THE BEARING PLATE LENGTH.

9.15 PROVIDE 1-#5 VERTICAL REINFORCING AT 32" OC AT ALL MASONRY WALLS UNLESS NOTED OTHERWISE. THIS REINFORCING SHALL BE CONTINUOUS FULL HEIGHT AND SPLICED 2'-0" ABOVE EACH FLOOR LEVEL.

9.16 MASONRY BLOCK CELLS CONTAINING VERTICAL REINFORCING SHALL BE GROUTED SOLID. FILLING CELLS WITH MORTAR IS UNACCEPTABLE. THE COMPRESSIVE STRENGTH OF GROUT AT THE END OF 28 DAYS SHALL BE 3,000 PSI MINIMUM.

9.17 ALL MASONRY WALLS SHALL BE REINFORCED WITH #9 GA, WIRE LADDERS (LADDER OR TRUSS TYPE) AT 16" OC HORIZONTAL REINFORCEMENT.

9.18 PROVIDE 2-#5 CONTINUOUS HORIZONTAL BARS IN THE TOP COURSE (BOND BEAM) OF ALL WALLS BELOW EACH FLOOR LEVEL OR ROOF AND FILL

10.0 - TIMBER TRUSS

10.01 ALL TRUSSES ARE CONSTRUCTED OF WOOD AND MEMBER SPACING SHALL NOT EXCEED 2'-0" ON CENTER.

10.02 FOR WIND, SNOW AND SEISMIC LOADINGS REFER TO "2.0 STRUCTURAL DESIGN LOADS".

10.03 TRUSS DESIGN MUST ACCOUNT FOR UNBALANCED SNOW LOADINGS.

10.04 TRUSS BOTTOM CHORDS SHALL BE DESIGNED FOR A MINIMUM CEILING DEAD LOAD OF 10 PSF AND A 20 PSF LIVE LOAD U.N.O.

10.05 ALL MEP IMPOSED LOADS SHALL BE SUPPORTED FROM THE TOP OR BOTTOM CHORDS OF THE TRUSS.

10.06 MINIMUM TRUSS MEMBER SIZES FOR TOP AND BOTTOM CHORDS SHALL BE 2x6.

10.07 ALL TRUSS SHOP DRAWINGS SHALL BE SUBMITTED TO THE ENGINEER FOR FINAL APPROVAL.

10.08 TRUSSES SHALL BEAR DIRECTLY ON (2) 2X6 SILLS WHICH SHALL BE SECURED TO FOUNDATION WALLS.

10.09 EACH TRUSS SHALL BE SECURED TO THE SILL WITH A TIE DOWN. TIE DOWNS TO BE APPROVED BY THE ENGINEER PRIOR TO INSTALLATION.

10.10 PERMANENT BOTTOM CORD LATERAL RESTRAINT SHALL BE INSTALLED @ A MAXIMUM 10' o.c. AND SHALL RUN THE ENTIRE LENGTH OF THE BUILDING. DIAGONAL BRACING SHALL BE INSTALLED FROM LATERAL RESTRAINT TO LATERAL RESTRAINT AT APPROXIMATELY 45° FROM RESTRAINTS AND BE SPACED A MAXIMUM OF 20' APART, UNLESS OTHERWISE NOTED. BRACING AND RESTRAINTS SHALL BE SECURE AT EACH BOTTOM CHORD INTERSECT.

11.0 - CARPENTRY

11.01 ALL WOOD CONSTRUCTION SHALL CONFORM TO THE NATIONAL DESIGN SPECIFICATIONS FOR STRESS GRADE LUMBER AND ALL STATE AND LOCAL CODES.

11.02 ALL LUMBER SHALL BE S-P-F SELECT No. 2 U.N.O. UNLESS OTHERWISE NOTED.

11.03 SAWN LUMBER SHALL BE KILN DRIED TO A MOISTURE CONTENT OF 19%.

11.04 NAIL 2-PLY BEAMS WITH 1 ROW OF 16d NAILS AT 12" ON CENTER FOR EVERY 3" OF MEMBER WIDTH & NAIL 3-PLY BEAMS WITH 1 ROW OF 16d NAILS AT 12" ON CENTER ON BOTH SIDES FOR EVERY 3" OF MEMBER WIDTH.

11.05 CONNECTING ELEMENTS INCLUDING BUT NOT NECESSARILY LIMITED TO BOLTS, NUTS, WASHERS, CLIPS, ETC. EXPOSED TO THE ELEMENTS SHALL BE HOT-DIPPED GALVANIZED. ALL OTHERS SHALL BE PRIMED PAINTED.

11.06 MINIMUM NAILING SHALL MEET OR EXCEED THE FASTENING SCHEDULE PER THE IBC 2009 TABLE 2304.9.1

11.07 TIMBER SILL PLATES ON CONCRETE SHALL BE PRESSURE TREATED SOUTHERN YELLOW PINE NO. 1 IN ACCORDANCE WITH THE AMERICAN WOOD-PERSERVERS' ASSOCIATION.

11.08 ALL ROOF PANELS SHALL BE 5/8" APA RATED 32/16 PLYWOOD OR "ADVANTECH" SHEATHING. NAIL ALL PLYWOOD EDGES WITH 10d COMMON NAILS AT 6" ON CENTER UNLESS OTHERWISE NOTED. INTERMEDIATE NAILING SHALL BE 10d NAILS AT 12" ON CENTER.

11.09 BLOCKING OR "H" CLIPS SHALL BE PROVIDED AT ALL UNSUPPORTED PLYWOOD EDGES AND WHERE FRAMING IS SPACED GREATER THAN 2'-0" ON CENTER.

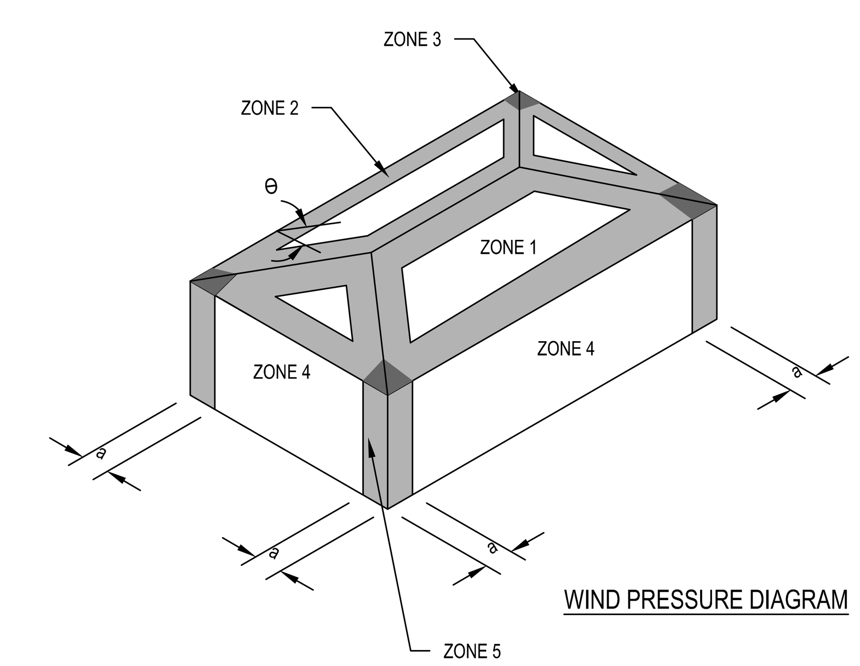

WIND PRESSURE DIAGRAM

NOTE(S):

1. MINIMUM PRESSURE ON ANY SURFACE SHALL BE 10 PSF.
2. TABLE PRESSURES ARE FOR SQUARE FOOT [SF] TRIBUTARY AREA, FOR OTHER AREAS LINEAR INTERPOLATE BETWEEN AREAS ABOVE.
3. POSITIVE PRESSURES ACT TOWARDS THE BUILDING, NEGATIVE ACT AWAY FROM THE BUILDING.
4. OVERHANG ZONES 2o AND 3o SHALL BE APPLIED TO CANOPIES.
5. ADJUSTMENT FACTOR FOR BUILDING HEIGHT AND EXPOSURE = 1.35
6. a = 4.07FT AT MAIN BUILDING.
7. DETAIL IS APPLICABLE FOR ROOF SLOPES 7°<Θ<=45°

COMPONENTS AND CLADDING WIND PRESSURES

ZONE	TRIBUTARY AREA [SF]	ADJUSTED PRESSURE
1 ROOF	10	22.3 -24.3
	50	20.8, -21.5
	100	20.1, -20.1
2 ROOF	10	22.3, -28.4
	50	20.8, -25.5
	100	20.1, -24.3
3 ROOF	10	22.3, -28.4
	50	20.8, -25.5
	100	20.1, -24.3
4 WALL	10	24.3, -26.3
	50	21.7, -23.8
	100	20.7, -22.7
5 WALL	10	24.3, -32.5
	50	21.7, -27.4
	100	20.7, -25.2
2o ROOF OVERHANG	10	-41.2
	50	-38.3
	100	-37.0
3o ROOF OVERHANG	10	-41.2
	50	-38.3
	100	-37.0

1 COMPONENTS AND CLADDING WIND PRESSURES
SCALE: N.T.S.

CONSTRUCTION DOCUMENTS
12/11/15

Weston & Sampson
273 Dividend Road, Rocky Hill, CT 06067
(860) 513-1473 (800) SAMPSON
www.westonandsampson.com

No.	Date	Dr.By	Ck.By	App.By	Description

APPROVED
Dec. 11, 2015
REGISTERED PROFESSIONAL ENGINEER
DATE

STATE OF CONNECTICUT
RICHARD A. CAMPBELL
#14862
LICENSED
PROFESSIONAL ENGINEER
12-11-2015

TOWN OF GREENWICH – DEPARTMENT OF PUBLIC WORKS
RITCH AVENUE WEST, GREENWICH, CONNECTICUT
BYRAM PARK POOL REPLACEMENT

GENERAL NOTES

APP.BY	CHK.BY	DSN.BY	DR.BY	JOB NO.	CONTRACT:	SCALE:	CADD NO.
RAC	RAC	NMS	CJW	2130336	–	VARIES	GREENWICH

FILE NO.
S0.00
SHEET – OF –

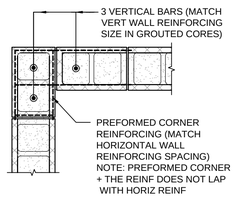

1 CORNER DETAIL WALL REINF.

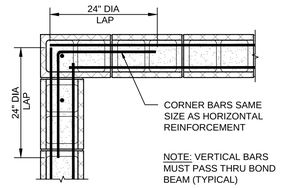

2 CORNER DETAIL BOND BEAM

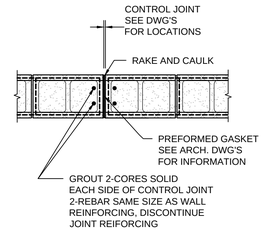

3 TYPICAL CONTROL JOINT DETAIL

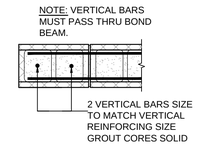

4 END DETAIL BOND BEAM

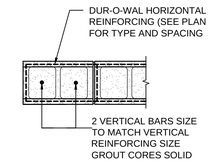

5 END DETAIL WALL REINF.

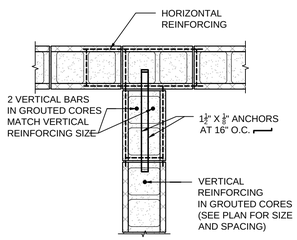

6 INTERSECTION DETAIL WALL REINF.

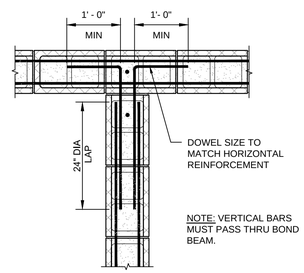

7 INTERSECTION DETAIL BOND BEAM

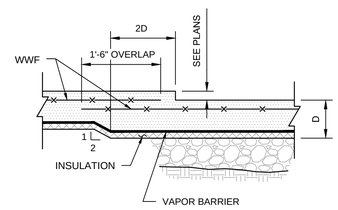

8 SLAB AT GRADE AT DEPRESSIONS

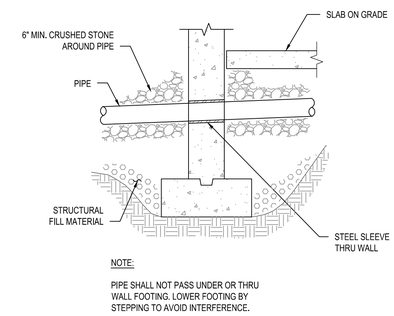

9 PIPE THRU FOUNDATION WALL

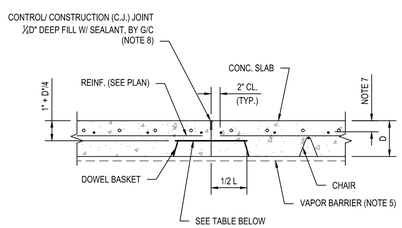

DOWEL SIZE AND SPACING			
SLAB THICKNESS, IN.	MIN. DOWEL LENGTH (L), IN.	MAXIMUM DOWEL SPACING, IN.	DOWEL DIAMETER AND TYPE
LESS THAN 8	N/A	N/A	N/A
8 TO AND INCLUDING 11.5	16	12	1" BAR

10 SLAB ON GRADE

SLAB NOTE(S):

1. ALL DOWELS SHALL BE STRAIGHT, SMOOTH AND FREE FROM BURRS AT THE ENDS
2. ONE-HALF OF EACH DOWEL SHALL BE OILED OR OTHERWISE TREATED TO PREVENT BONDING WITH THE CONCRETE.
3. CONTRACTOR SHALL SECURELY SUPPORT DOWELS BY MEANS OF DOWEL BASKETS TO PREVENT ANY DISPLACEMENT OF THE DOWELS DURING CONCRETE PLACEMENT.
4. STOP REINFORCING 2" FROM EACH SIDE OF CONTROL/CONSTRUCTION JOINTS.
5. PUNCTURES IN THE VAPOR BARRIER MUST BE SEALED. ENGINEER SHALL INSPECT THE CONDITION OF THE VAPOR BARRIER BEFORE PLACING CONCRETE.
6. REINFORCING SHALL BE PLACED 2" OR D/3 FROM FINISH FLOOR, WHICHEVER IS LESS, AT CONTRACTION JOINTS IT SHALL BE PERMITTED TO OMIT DOWEL BARS IF 50% OF THE REINFORCING IS LEFT CONTINUOUS THROUGH THE JOINT AND THE REMAINING BARS ARE CUT IN ACCORDANCE WITH NOTE 4.

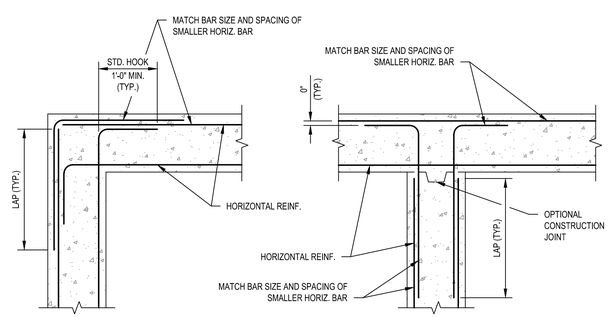

11 HORIZONTAL WALL REINFORCING PLAN

NOTE(S):

1. VERTICAL REINFORCING NOT SHOWN FOR CLARITY.
2. REINFORCING APPLIES TO ALL CONCRETE AND MASONRY CORNERS/INTERSECTIONS.
3. REFER TO LAP SPLICE TABLE FOR REQUIRED LENGTH.
4. WHERE BARS OF DIFFERENT SIZE SPLICE, LAP LENGTH SHALL BE AS REQUIRED FOR THE SMALLER BAR.

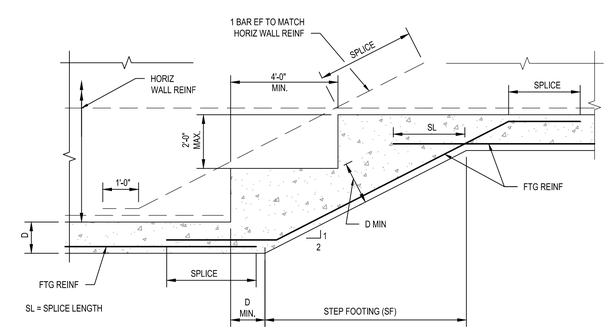

12 STEP FOOTING DETAIL

CONSTRUCTION DOCUMENTS
12/11/15

Weston&Sampson
273 Dividend Road, Rocky Hill, CT 06067
(860) 513-1473 (800) SAMPSON
www.westonandsampson.com

No.	Date	Dr.By	Ck.By	App.By	Description	DATE
					APPROVED	Dec. 11, 2015

REGISTERED PROFESSIONAL ENGINEER

STATE OF CONNECTICUT — RICHARD A. CAMPBELL — #14862 — LICENSED PROFESSIONAL ENGINEER — 12/11/2015

TOWN OF GREENWICH – DEPARTMENT OF PUBLIC WORKS
RITCH AVENUE WEST, GREENWICH, CONNECTICUT
BYRAM PARK POOL REPLACEMENT
TYPICAL DETAILS 1

CADD NO.	SCALE:	CONTRACT:	JOB NO.	DR.BY	DSN.BY	CHK.BY	APP.BY
GREENWICH	VARIES	–	2130336	CJW	NMS	RAC	RAC

S0.01

FILE NO.

SHEET — OF —

STEEL ANGLE LINTEL SCHEDULE

MASONRY OPENING	WALL THICKNESS			
	4" WALL	6" WALL	8" WALL	12" WALL
3'-0"	1 - L 3½x3½x5/16	2- L 3x2½x5/16	2- L 3½ x3½x5/16	3- L 3½ x3½x5/16
4'-0"	1 - L 4x3½x5/16	2- L 3x2½x5/16	2- L 4x3½x5/16	3- L 4x3½x5/16
5'-0"	1 - L 4x3½x⅜	2- L 5 x3x⅜	2- L 5x3½x⅜	3- L 5x3½x⅜
6'-0"	1 - L 5x3½x⅜	2- L 5 x3x⅜	2- L 5x3½x⅜	3- L 5x3½x⅜
8'-0"	1 - L 6x3½x⅜	2- L 5x3x½	2- L 6x3½x½	3- L 6x3½x½

1. PROVIDE AND INSTALL LINTEL ANGLES FOR MASONRY OPENINGS IN ACCORDANCE WITH THE SCHEDULE ABOVE. INSTALL LONG LEG VERTICAL. SEE ARCHITECTURAL & MECHANICAL PLANS FOR LOCATIONS.
2. PROVIDE 6" MIN. BEARING AT EACH END BUT NOT LESS THAN 1" PER FOOT OF SPAN. FILL 2 COURSES OF MASONRY BELOW BEARING WITH MORTAR.
3. WHERE MINIMUM BEARING CANNOT BE PROVIDED, ATTACH SECURELY TO ADJACENT STRUCTURAL MEMBERS OR PROVIDE SEPARATE SUPPORTS.
4. MINIMUM THICKNESS SHALL BE ⅝" AND ALL ANGLES SHALL BE HOT DIP GALVANIZED.
5. WHERE WALL THICKNESS EXCEEDS 12" PROVIDE ON ADDITIONAL ANGLE FOR EACH ADDITIONAL 4" OF WALL.

1 STEEL LINTEL SCHEDULE

SCALE:N.T.S.

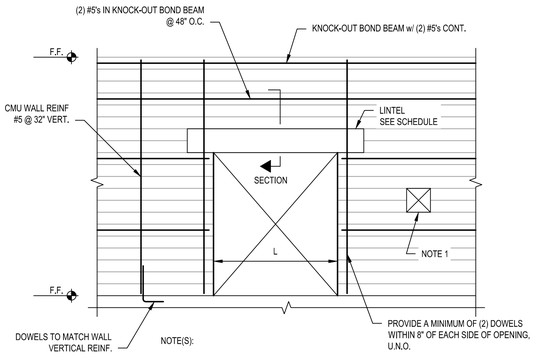

NOTE(S):

1. REINFORCEMENT ADJACENT TO OPENINGS NEED NOT BE PROVIDED FOR OPENINGS SMALLER THAT 16-INCHES IN EITHER HORIZONTAL OR VERTICAL DIRECTION, UNLESS DISTRIBUTED REINFORCING IS INTERRUPTED BY SUCH OPENINGS.
2. REFER TO SLAB PLANS FOR ADDITIONAL MASONRY WALL REINFORCING REQUIREMENTS.

2 MASONRY WALL REINFORCING

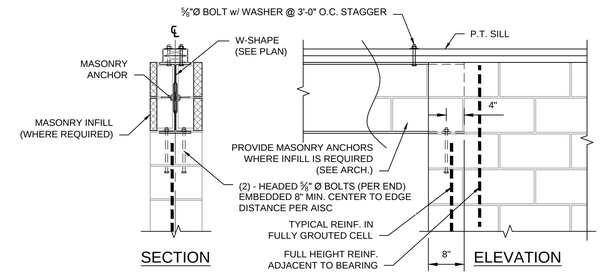

3 BEAM BEARING ON CMU

LINTEL DESIGNATION	LINTEL REINFORCING	END BEARING	LINTEL TYPE
L-1	2 - #4	24"	A
L-2	2 - #5	24"	A
L-3	2 - #5	24"	B
L-4	2 - #6	24"	B
L-5	2 - #7	24"	B
L-6	2 - #7	24"	C

NOTE(S):
1. CMU f'm = 1,500 PSI (MIN.)

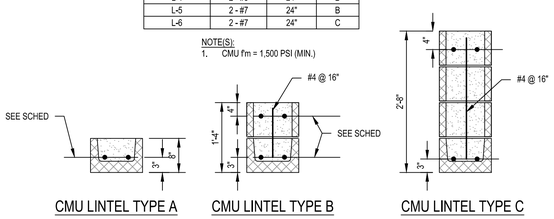

4 MASONRY LINTEL SCHEDULE

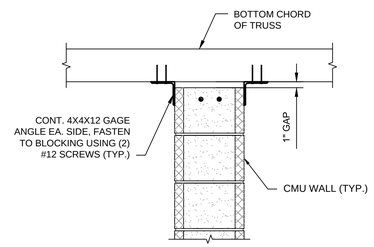

5 CMU WALL PERPENDICULAR TO TRUSSES

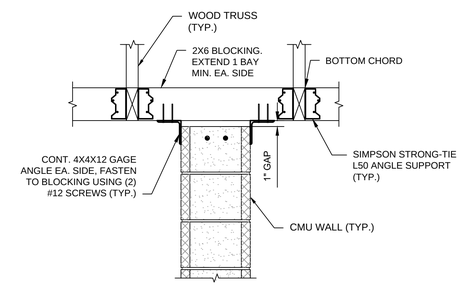

6 CMU WALL PARALLEL TO TRUSSES

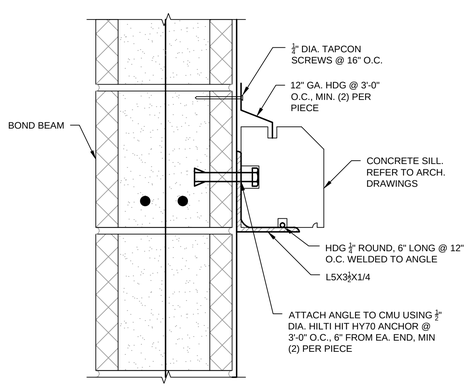

7 CONCRETE SILL DETAIL

SCALE: 3"=1'-0"

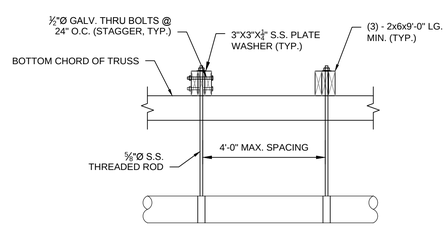

8 PIPE SUPPORT DETAIL

CONSTRUCTION DOCUMENTS
12/11/15

Weston&Sampson
273 Dividend Road, Rocky Hill, CT 06067
(860) 513-1473 (800) SAMPSON
www.westonandsampson.com

No.	Date	Dr.By	Ck.By	App.By	Description	DATE
		A	P	P	R O V E D	Dec. 11, 2015

REGISTERED PROFESSIONAL ENGINEER

STATE OF CONNECTICUT — RICHARD A. CAMPBELL — #14862 — LICENSED — PROFESSIONAL ENGINEER — 12-11-2015

TOWN OF GREENWICH – DEPARTMENT OF PUBLIC WORKS
RITCH AVENUE WEST, GREENWICH, CONNECTICUT
BYRAM PARK POOL REPLACEMENT

TYPICAL DETAILS 2

CADD NO.	SCALE:	CONTRACT:	JOB NO.	DR.BY	DSN.BY	CHK.BY	APP.BY
GREENWICH	VARIES	–	2130336	CJW	NMS	RAC	RAC

S0.02

FILE NO.

SHEET – OF –

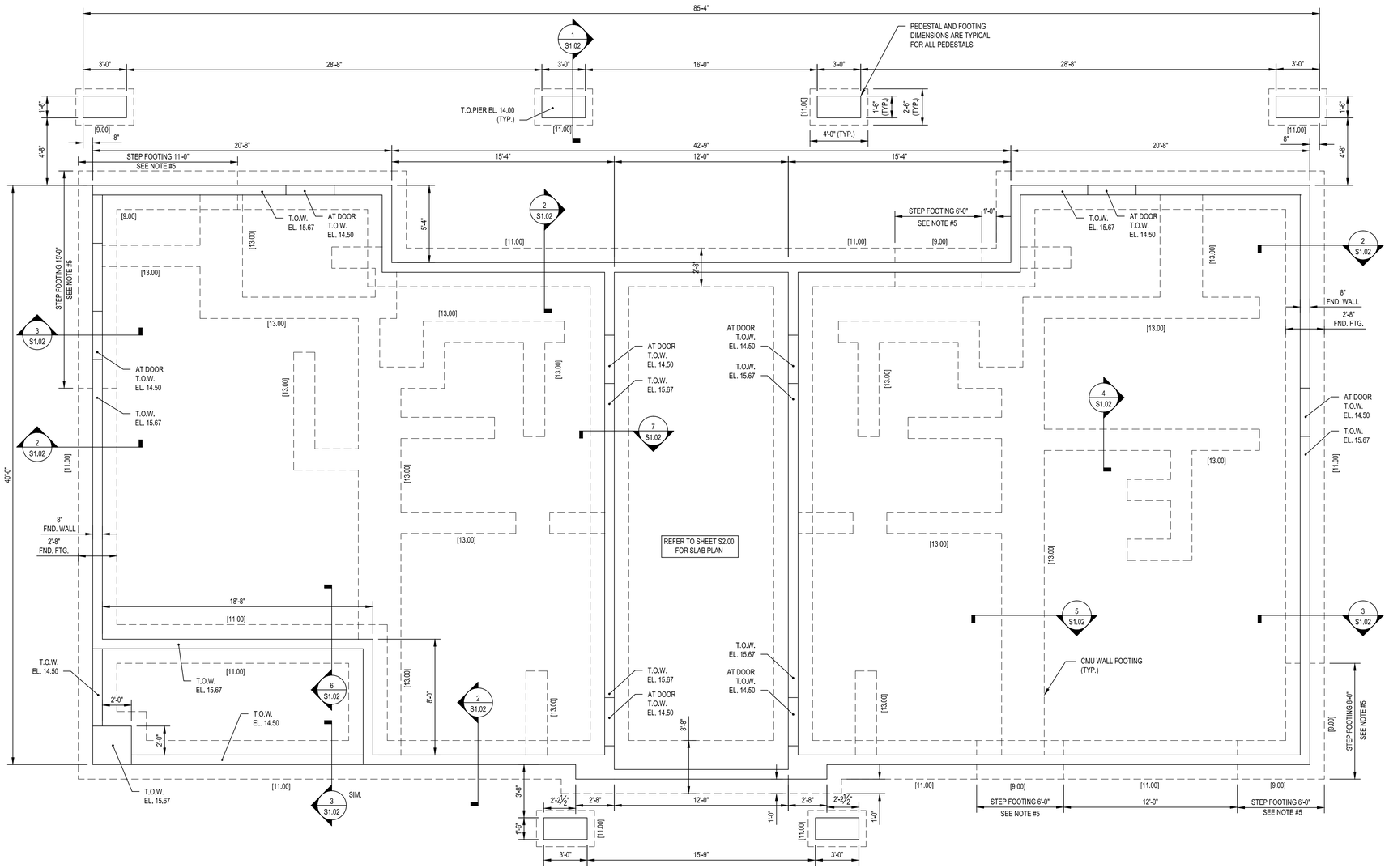

NOTES:
1. FOR GENERAL NOTES SEE SHEET S0.00.
2. FOR TYPICAL DETAILS SEE SHEET S0.01 AND S0.02.
3. [X'-X"] INDICATES BOTTOM OF FOOTING ELEVATION.
4. REFER AND COORDINATE WITH CIVIL PROCESS, MECHANICAL, ELECTRICAL, AND PLUMBING DRAWINGS FOR ALL PIPE PENETRATIONS NOT SHOWN.
5. COORDINATE STEP FOOTINGS WITH PIPE SIZE, LOCATION, AND ELEVATION ON PROCESS, MECHANICAL, ELECTRICAL, AND PLUMBING DRAWINGS.
6. REFER TO STEP FOOTING DETAIL ON S0.01

1 FOUNDATION PLAN
SCALE: 1/4"=1'-0"

CONSTRUCTION DOCUMENTS
12/11/15

Weston&Sampson
273 Dividend Road, Rocky Hill, CT 06067
(860) 513-1473 (800) SAMPSON
www.westonandsampson.com

No.	Date	Dr.By	Ck.By	App.By	Description	DATE
					APPROVED	Dec. 11, 2015

REGISTERED PROFESSIONAL ENGINEER

STATE OF CONNECTICUT — RICHARD A. CAMPBELL #14862 LICENSED PROFESSIONAL ENGINEER — 12/11/2015

TOWN OF GREENWICH – DEPARTMENT OF PUBLIC WORKS
RITCH AVENUE WEST, GREENWICH, CONNECTICUT
BYRAM PARK POOL REPLACEMENT

FOUNDATION PLAN MAIN BUILDING

CADD NO.	SCALE:	CONTRACT:	JOB NO.	DR.BY	DSN.BY	CHK.BY	APP.BY
GREENWICH	VARIES	–	2130336	CJW	NMS	RAC	RAC

S1.00

FILE NO.

SHEET – OF –

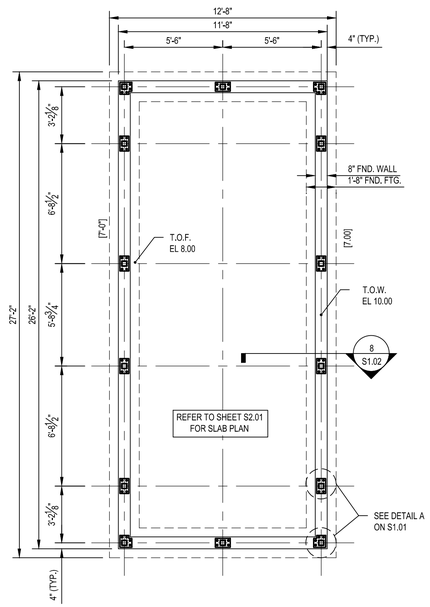

1 ENTRANCE BUILDING
SCALE: 1/4"=1'-0"

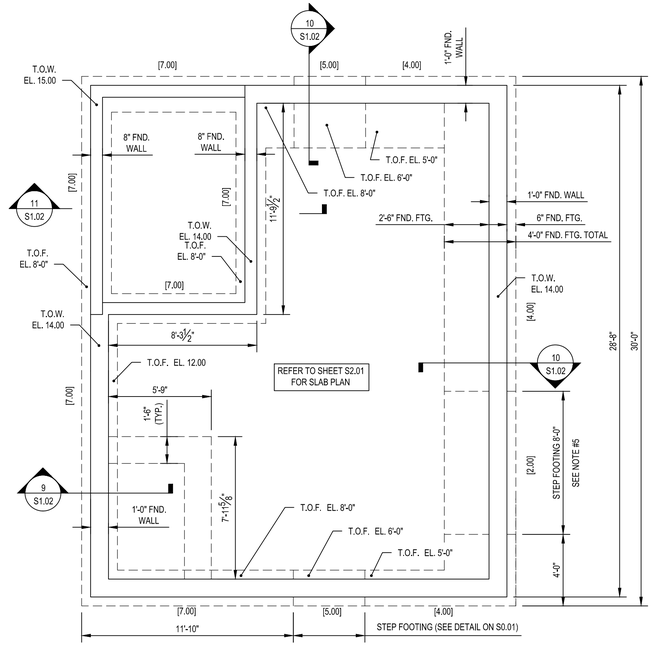

NOTES:
1. FOR GENERAL NOTES SEE SHEET S0.00.
2. FOR TYPICAL DETAILS SEE SHEET S0.01 AND S0.02.
3. [X'-X"] INDICATES BOTTOM OF FOOTING ELEVATION.
4. REFER AND COORDINATE WITH CIVIL PROCESS, MECHANICAL, ELECTRICAL, AND PLUMBING DRAWINGS FOR ALL PIPE PENETRATIONS NOT SHOWN.
5. COORDINATE STEP FOOTINGS WITH PIPE SIZE, LOCATION, AND ELEVATION ON PROCESS, MECHANICAL, ELECTRICAL, AND PLUMBING DRAWINGS.

2 FILTER BUILDING
SCALE: 1/4"=1'-0"

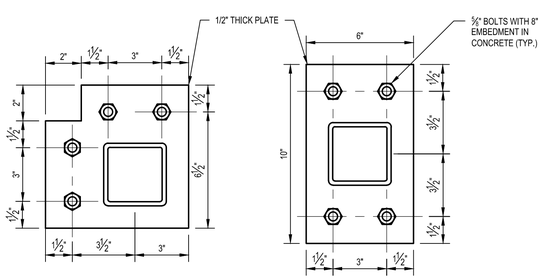

A BASE PLATE DETAILS
SCALE: 3"=1'-0"

CONSTRUCTION DOCUMENTS
12/11/15

Weston&Sampson
273 Dividend Road, Rocky Hill, CT 06067
(860) 513-1473 (800) SAMPSON
www.westonandsampson.com

No.	Date	Dr.By	Ck.By	App.By	Description	DATE
					APPROVED	Dec. 11, 2015

REGISTERED PROFESSIONAL ENGINEER

STATE OF CONNECTICUT
RICHARD A. CAMPBELL
#14862
LICENSED
PROFESSIONAL ENGINEER
12/11/2015

TOWN OF GREENWICH – DEPARTMENT OF PUBLIC WORKS
RITCH AVENUE WEST, GREENWICH, CONNECTICUT

BYRAM PARK POOL REPLACEMENT

FOUNDATION PLAN AND SECTIONS
FILTER BUILDING AND ENTRANCE BUILDING

CADD NO.	SCALE:	CONTRACT:	JOB NO.	DR.BY	DSN.BY	CHK.BY	APP.BY
GREENWICH	VARIES	–	2130336	CJW	NMS	RAC	RAC

FILE NO.

S1.01

SHEET – OF –

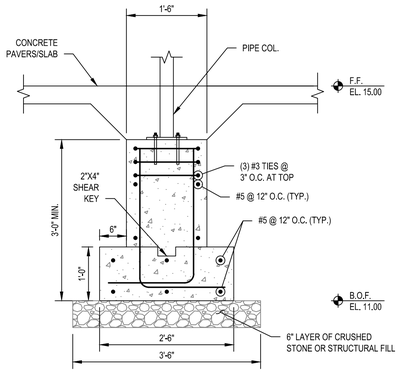

1 SECTION
SCALE: 3/4"=1'-0"

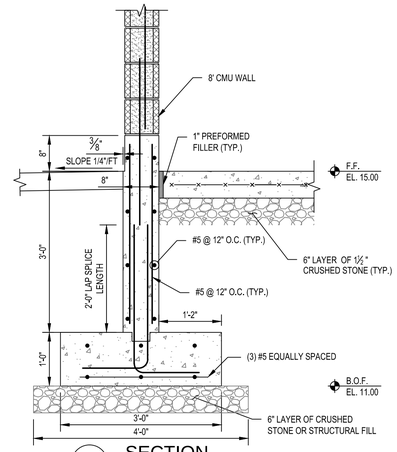

2 SECTION
SCALE: 3/4"=1'-0"

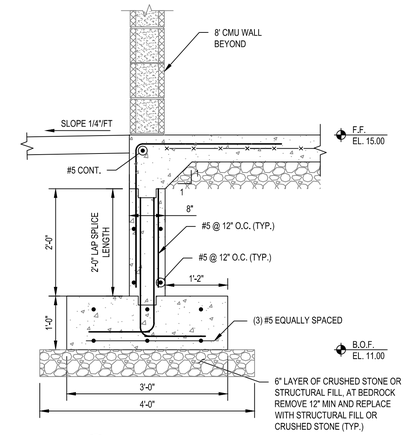

3 SECTION
SCALE: 3/4"=1'-0"

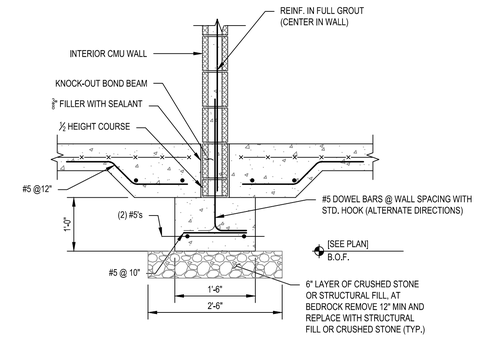

4 SECTION
SCALE: 3/4"=1'-0"

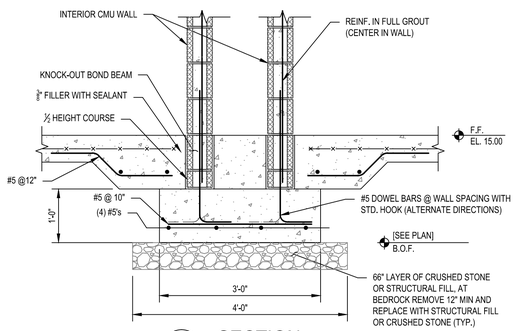

5 SECTION
SCALE: 3/4"=1'-0"

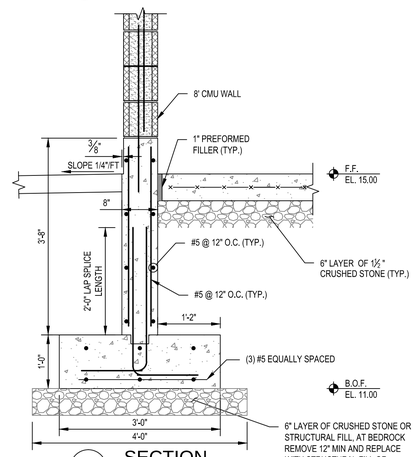

6 SECTION
SCALE: 3/4"=1'-0"

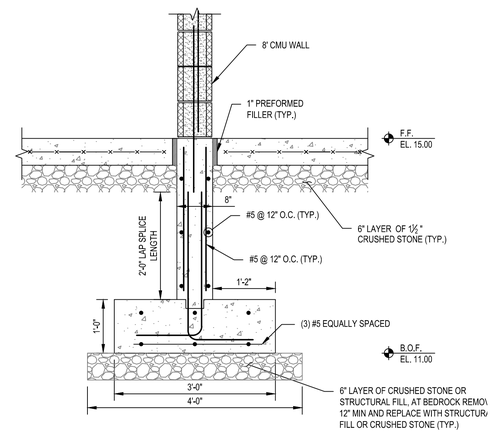

7 SECTION
SCALE: 3/4"=1'-0"

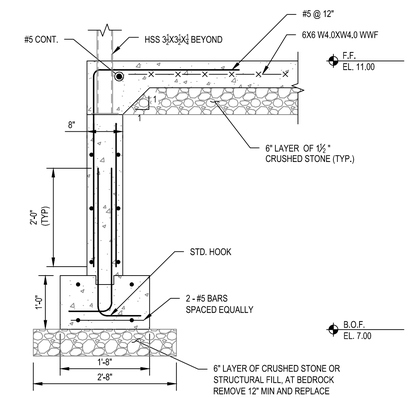

8 SECTION
SCALE: 3/4"=1'-0"

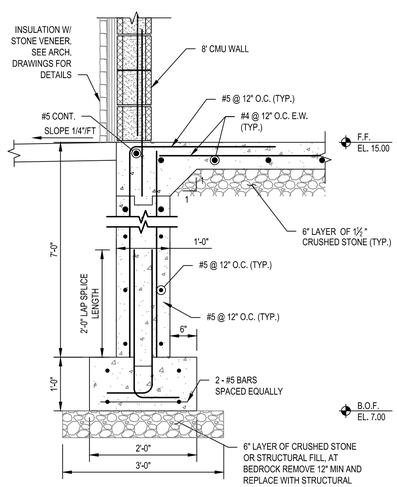

9 SECTION
SCALE: 3/4"=1'-0"

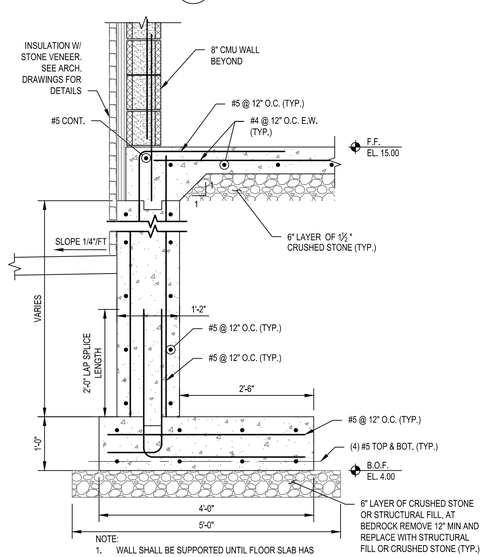

NOTE:
1. WALL SHALL BE SUPPORTED UNTIL FLOOR SLAB HAS REACHED 28 DAY STRENGTH

10 SECTION
SCALE: 3/4"=1'-0"

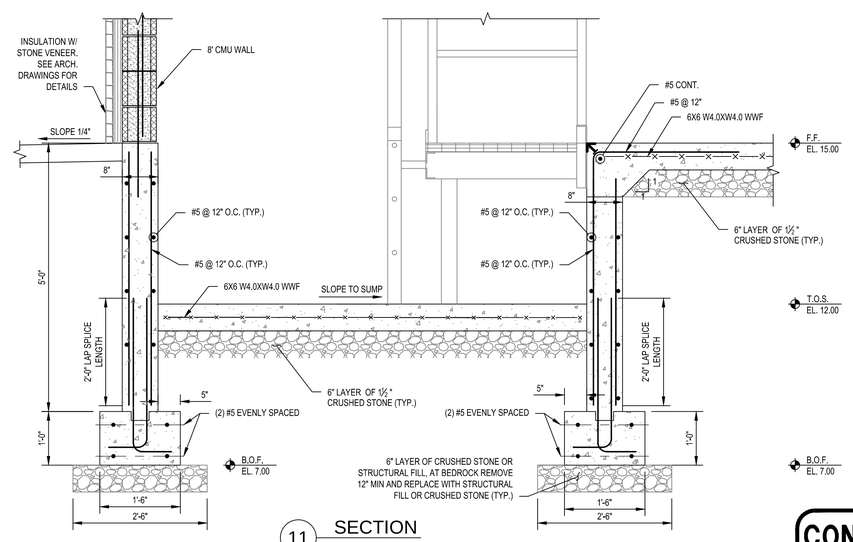

11 SECTION
SCALE: 3/4"=1'-0"

CONSTRUCTION DOCUMENTS
12/11/15

Weston&Sampson
273 Dividend Road, Rocky Hill, CT 06067
(860) 513-1473 (800) SAMPSON
www.westonandsampson.com

No.	Date	Dr.By	Ck.By	App.By	Description	DATE
					A P P R O V E D	Dec. 11, 2015

REGISTERED PROFESSIONAL ENGINEER

STATE OF CONNECTICUT — RICHARD A. CAMPBELL — #14862 — LICENSED PROFESSIONAL ENGINEER — 12/11/2015

TOWN OF GREENWICH – DEPARTMENT OF PUBLIC WORKS
RITCH AVENUE WEST, GREENWICH, CONNECTICUT
BYRAM PARK POOL REPLACEMENT

FOUNDATION SECTIONS AND DETAILS

CADD NO.	SCALE:	CONTRACT:	JOB NO.	DR.BY	DSN.BY	CHK.BY	APP.BY
GREENWICH	VARIES	–	2130336	CJW	NMS	RAC	RAC

S1.02

FILE NO.

SHEET – OF –

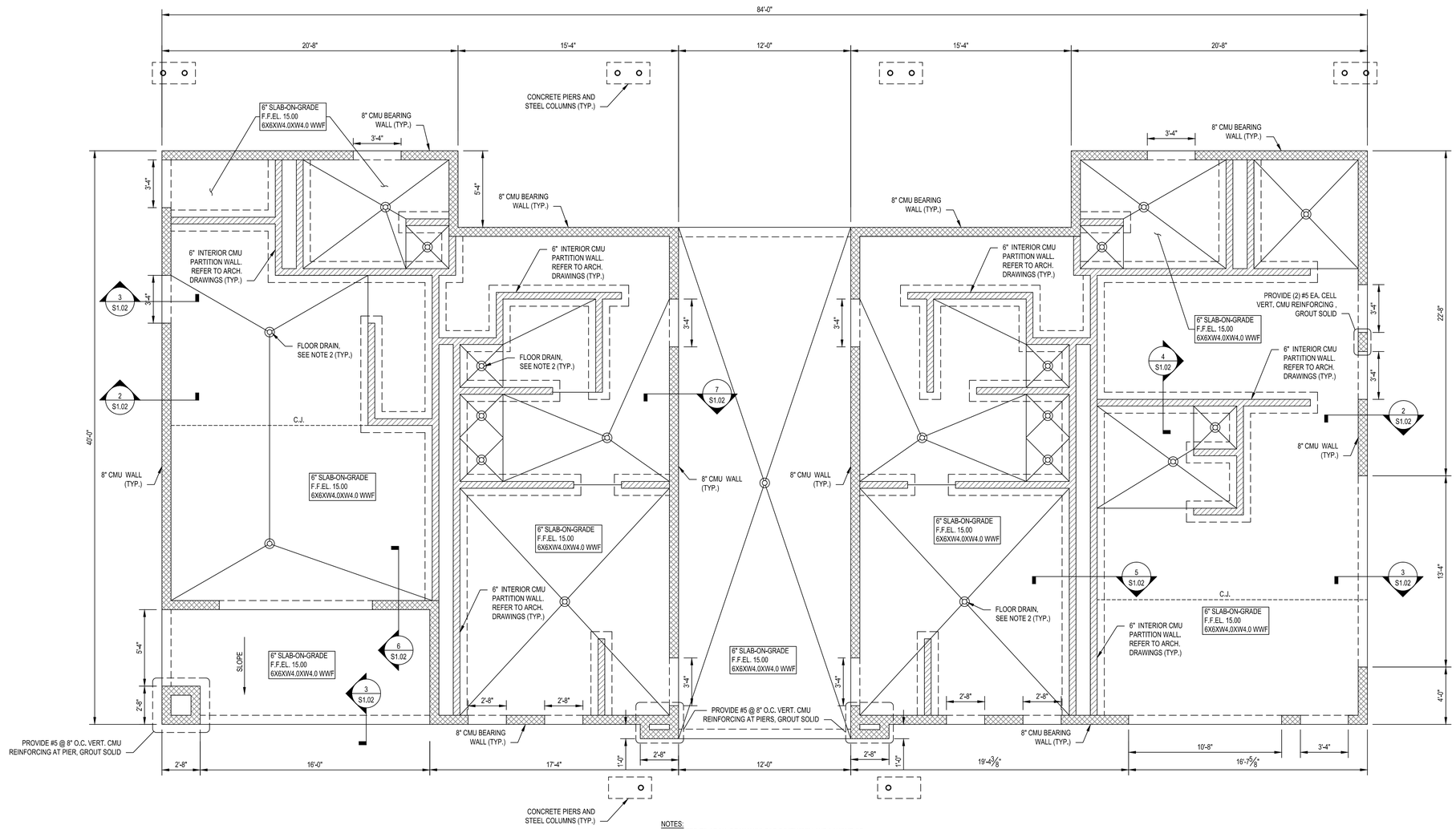

NOTES:
1. REFER TO ARCH. DRAWINGS FOR DIMENSION AND LAYOUT OF INTERIOR WALLS
2. DEPRESS SLAB AT FLOOR DRAINS. COORDINATE WITH PLUMBING DWGS. AND APPROVED SUBMITTALS.
3. PROVIDE PLASTIC VAPOR RETARDER UNDER THE SLAB PER SPECIFICATIONS.

1 SLAB PLAN
SCALE: 1/4"=1'-0"

CONSTRUCTION DOCUMENTS
12/11/15

Weston&Sampson
273 Dividend Road, Rocky Hill, CT 06067
(860) 513-1473 (800) SAMPSON
www.westonandsampson.com

No.	Date	Dr.By	Ck.By	App.By	Description	DATE
					APPROVED	Dec. 11, 2015

REGISTERED PROFESSIONAL ENGINEER

STATE OF CONNECTICUT
RICHARD A. CAMPBELL
#14862
LICENSED
PROFESSIONAL ENGINEER
12/11/2015

TOWN OF GREENWICH – DEPARTMENT OF PUBLIC WORKS
RITCH AVENUE WEST, GREENWICH, CONNECTICUT
BYRAM PARK POOL REPLACEMENT

SLAB PLAN MAIN BUILDING

CADD NO.	SCALE:	CONTRACT:	JOB NO.	DR.BY	DSN.BY	CHK.BY	APP.BY
GREENWICH	VARIES	–	2130336	CJW	NMS	RAC	RAC

S2.00

FILE NO.

SHEET – OF –

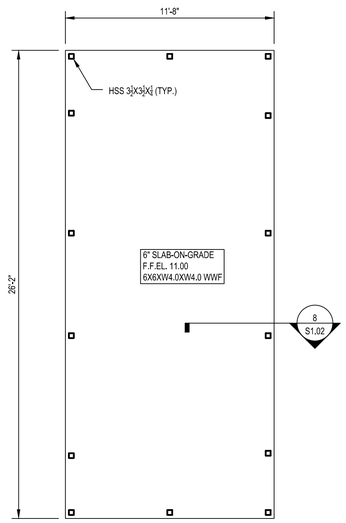

1 ENTRANCE BUILDING
SCALE: 1/4"=1'-0"

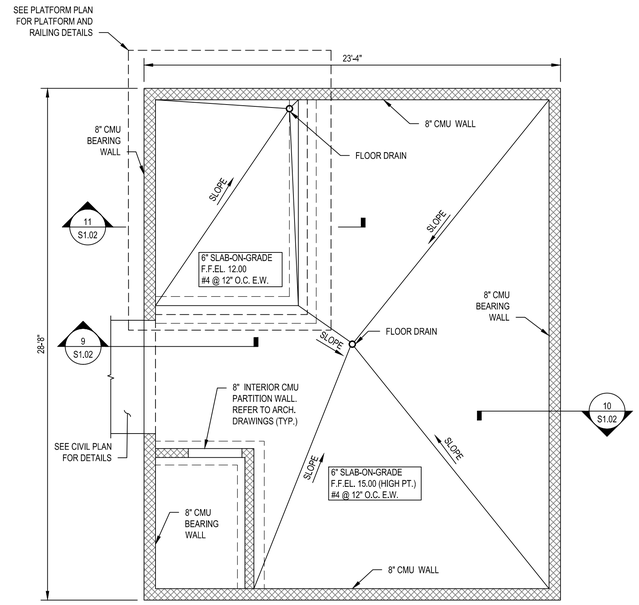

2 FILTER BUILDING
SCALE: 1/4"=1'-0"

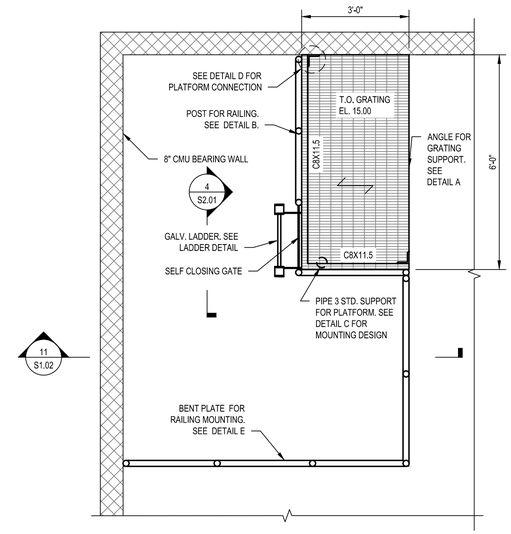

NOTE: PLATFORM FRAMING, LADDER, RAILINGS, GRATING, AND FASTENERS SHALL BE HOT-DIPPED GALVANIZED.

3 PLATFORM PLAN
SCALE: 1/2"=1'-0"

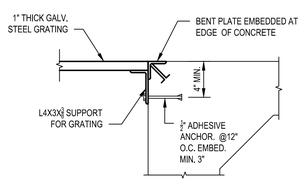

A GRATING SUPPORT AT WALL
SCALE: 1-1/2"=1'-0"

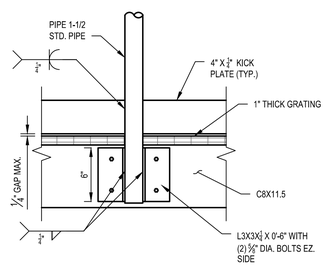

B RAILING CONNECTION AT PLATFORM
SCALE: 1-1/2"=1'-0"

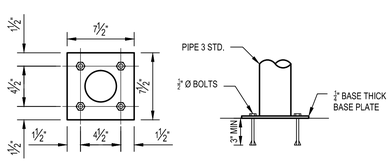

BASE PLATE DETAILS

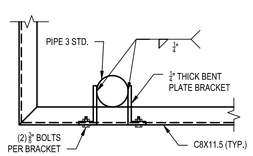

C PLATFORM POST DETAIL
SCALE: 1-1/2"=1'-0"

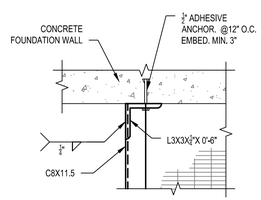

D PLATFORM BEAM CONNECTION AT WALL
SCALE: 1-1/2"=1'-0"

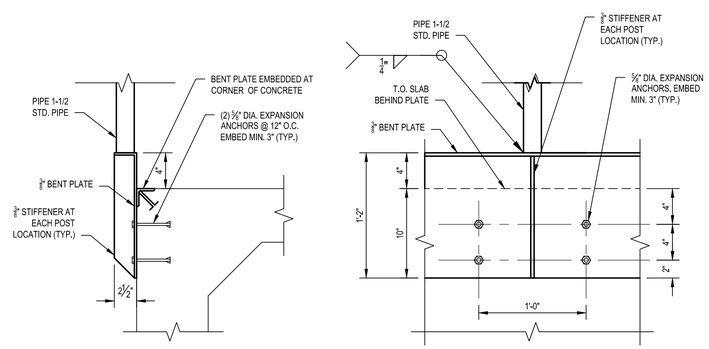

E RALING DETAIL AT WALL
SCALE: 1-1/2"=1'-0"

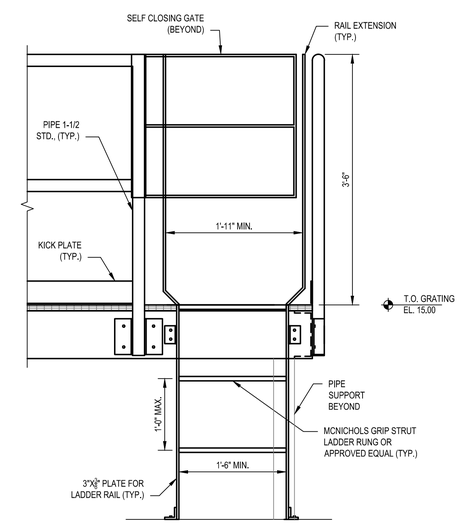

4 ELEVATION AT LADDER
SCALE: 1"=1'-0"

CONSTRUCTION DOCUMENTS
12/11/15

Weston&Sampson
273 Dividend Road, Rocky Hill, CT 06067
(860) 513-1473 (800) SAMPSON
www.westonandsampson.com

No.	Date	Dr.By	Ck.By	App.By	Description	DATE
				A P P R O V E D		Dec. 11, 2015

REGISTERED PROFESSIONAL ENGINEER

STATE OF CONNECTICUT
RICHARD A. CAMPBELL
#14862
LICENSED
PROFESSIONAL ENGINEER
12-11-2015

TOWN OF GREENWICH – DEPARTMENT OF PUBLIC WORKS
RITCH AVENUE WEST, GREENWICH, CONNECTICUT
BYRAM PARK POOL REPLACEMENT
SLAB PLAN FILTER BUILDING AND ENTRANCE BUILDING

CADD NO.	SCALE:	CONTRACT:	JOB NO.	DR.BY	DSN.BY	CHK.BY	APP.BY
GREENWICH	VARIES	–	2130336	CJW	NMS	RAC	RAC

FILE NO. S2.01

SHEET – OF –

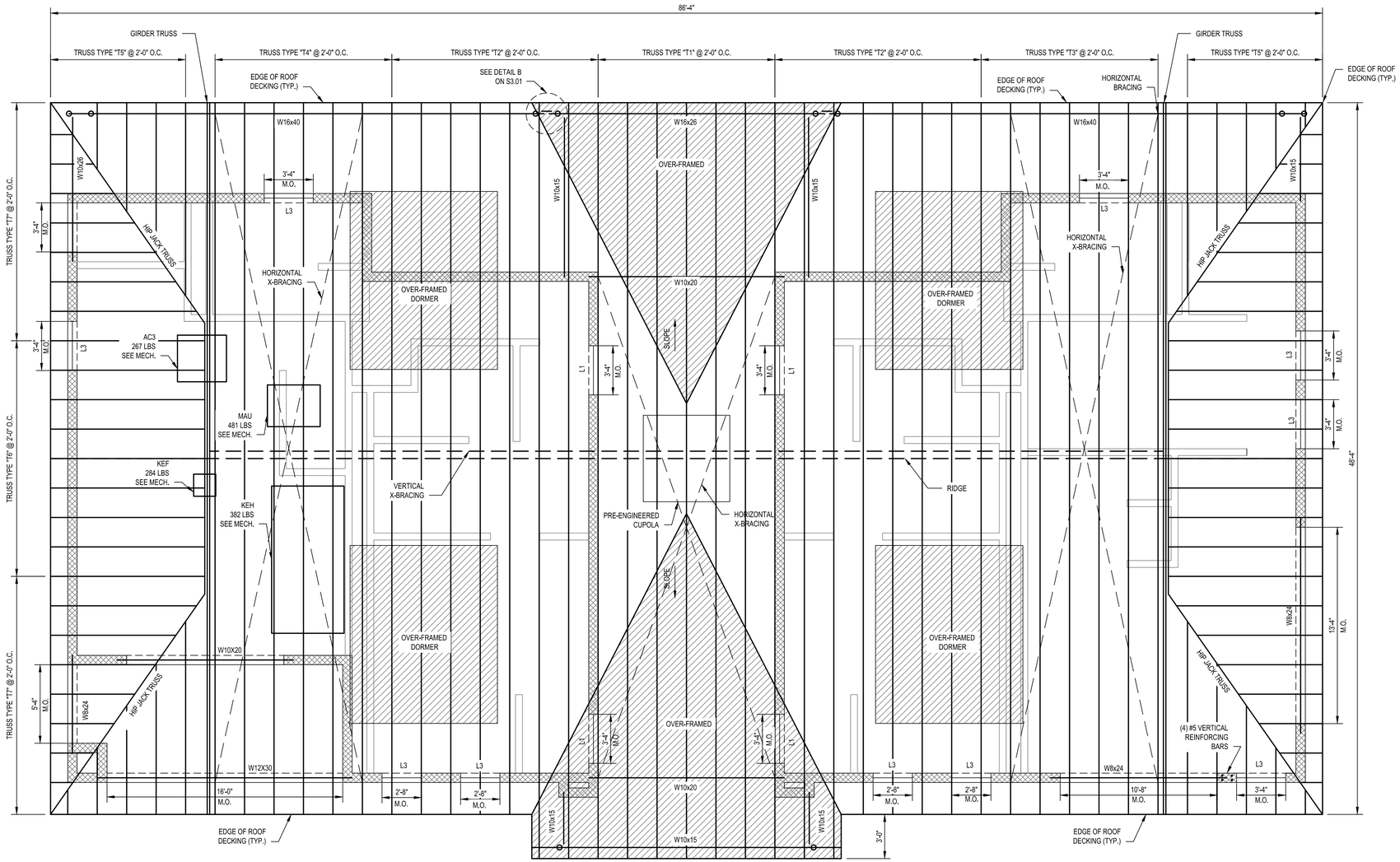

NOTE:

1. ROOF SHEATHING SHALL BE $\frac{3}{4}$" THICK EXTERIOR GRADE STRUCTURAL 1 PLYWOOD. FASTEN PLYWOOD TO FRAMING USING 10D NAILS @ 6" O.C. EDGES AND 6" O.C. FIELD. PROVIDE BLOCKING AT PANEL EDGES.

1 ROOF FRAMING PLAN

SCALE: 1/4"=1'-0"

CONSTRUCTION DOCUMENTS
12/11/15

Weston&Sampson.
273 Dividend Road, Rocky Hill, CT 06067
(860) 513-1473 (800) SAMPSON
www.westonandsampson.com

No.	Date	Dr.By	Ck.By	App.By	Description	DATE
				A P P R O V E D		Dec. 11, 2015

REGISTERED PROFESSIONAL ENGINEER

STATE OF CONNECTICUT — RICHARD A. CAMPBELL — #14862 — LICENSED — PROFESSIONAL ENGINEER — 12/11/2015

TOWN OF GREENWICH – DEPARTMENT OF PUBLIC WORKS
RITCH AVENUE WEST, GREENWICH, CONNECTICUT
BYRAM PARK POOL REPLACEMENT

ROOF FRAMING PLAN MAIN BUILDING

CADD NO.	SCALE:	CONTRACT:	JOB NO.	DR.BY	DSN.BY	CHK.BY	APP.BY
GREENWICH	VARIES	–	2130336	CJW	NMS	RAC	RAC

S3.00

FILE NO.

SHEET – OF –

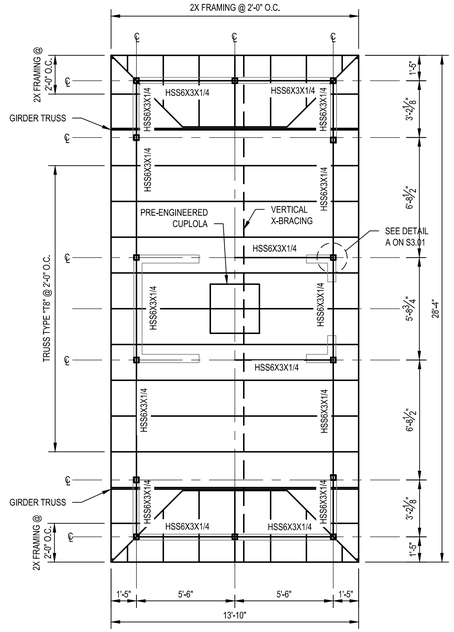

NOTE:

1. ROOF SHEATHING SHALL BE ¾" THICK EXTERIOR GRADE STRUCTURAL 1 PLYWOOD. FASTEN PLYWOOD TO FRAMING USING 10D NAILS @ 6" O.C. EDGES AND 6" O.C. FIELD. PROVIDE BLOCKING AT PANEL EDGES.

1 ENTRANCE BUILDING

SCALE: 1/4"=1'-0"

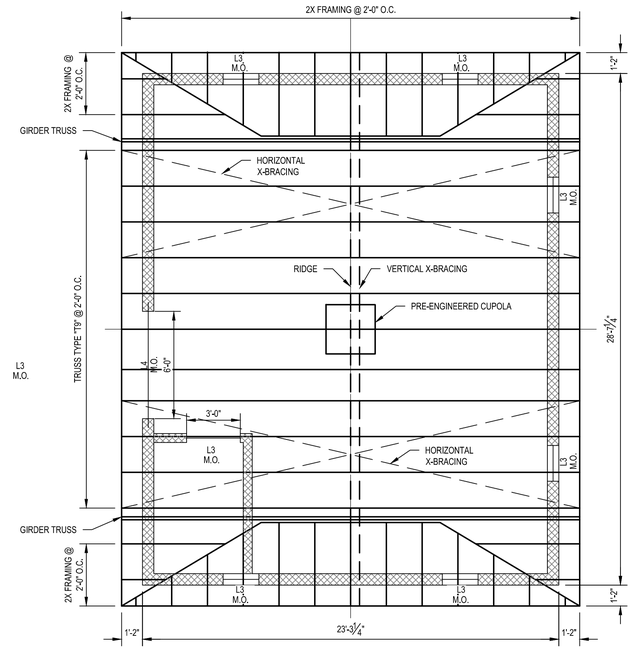

NOTE:

1. ROOF SHEATHING SHALL BE ¾" THICK EXTERIOR GRADE STRUCTURAL 1 PLYWOOD. FASTEN PLYWOOD TO FRAMING USING 10D NAILS @ 6" O.C. EDGES AND 6" O.C. FIELD. PROVIDE BLOCKING AT PANEL EDGES.

2 FILTER BUILDING

SCALE: 1/4"=1'-0"

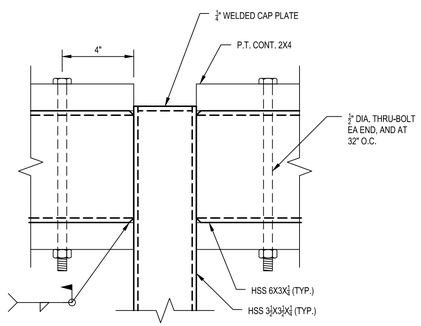

A DETAIL

SCALE: 3"=1'-0"

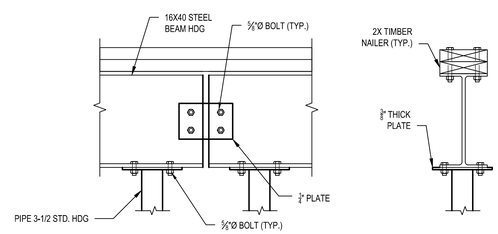

B BEAM TO COLUMN CONNECTION

SCALE: 3/4"=1'-0"

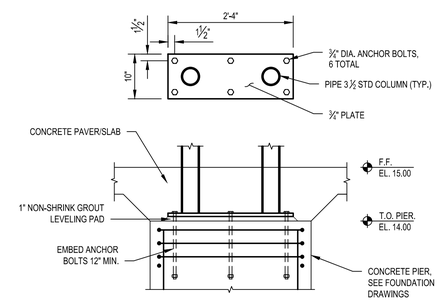

NOTE:
COAT EXPOSED STEEL FOR ANCHOR COLTS, BASE PLATE, AND COLUMN TO 1'-0" ABOVE FINISH GRADE WITH COAL TAR EPOXY PAINT OR OTHER APPROVED COATING.

C COLUMN BASE PLATE DETAILS

SCALE: 3/4"=1'-0"

CONSTRUCTION DOCUMENTS
12/11/15

Weston&Sampson.
273 Dividend Road, Rocky Hill, CT 06067
(860) 513-1473 (800) SAMPSON
www.westonandsampson.com

No.	Date	Dr.By	Ck.By	App.By	Description
		A	P	P	R O V E D

Dec. 11, 2015
DATE
REGISTERED PROFESSIONAL ENGINEER

STATE OF CONNECTICUT
RICHARD A. CAMPBELL
#14862
LICENSED
PROFESSIONAL ENGINEER
12/11/2015

TOWN OF GREENWICH – DEPARTMENT OF PUBLIC WORKS
RITCH AVENUE WEST, GREENWICH, CONNECTICUT
BYRAM PARK POOL REPLACEMENT

ROOF PLAN FILTER BUILDING AND ENTRANCE BUILDING

CADD NO.	SCALE:	CONTRACT:	JOB NO.	DR.BY	DSN.BY	CHK.BY	APP.BY
GREENWICH	VARIES	–	2130336	CJW	NMS	RAC	RAC

S3.01

FILE NO.

SHEET – OF –

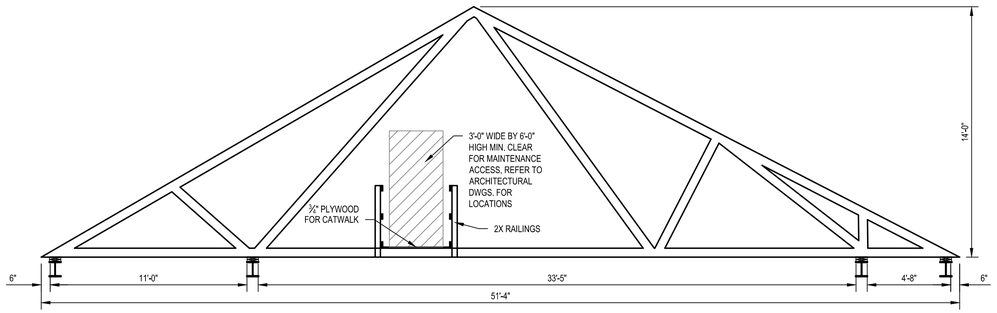

TRUSS TYPE T1

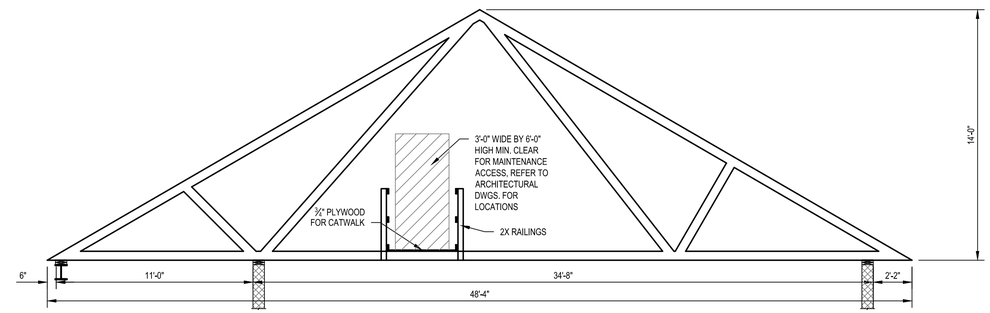

TRUSS TYPE T2

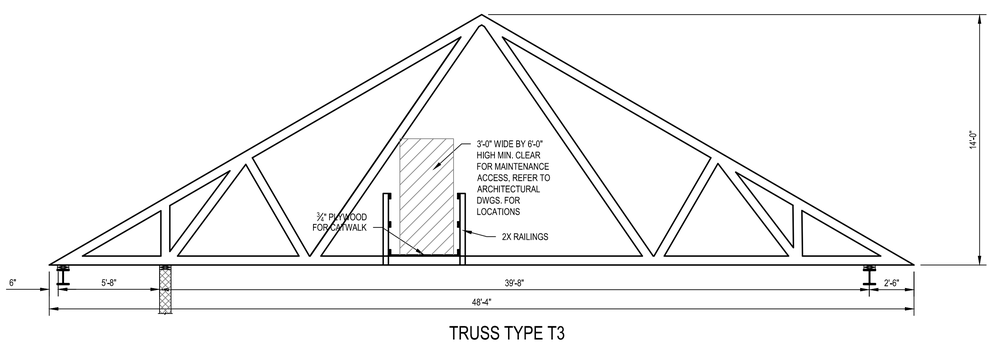

TRUSS TYPE T3

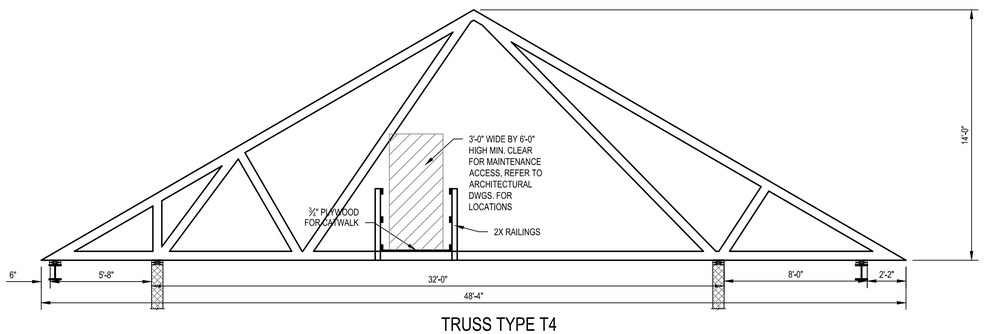

TRUSS TYPE T4

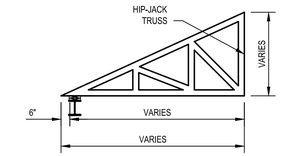

TRUSS TYPE T5

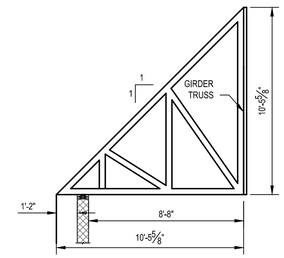

TRUSS TYPE T6

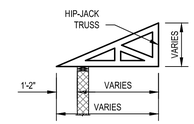

TRUSS TYPE T7

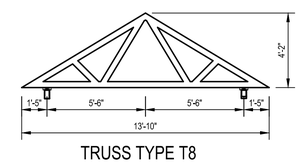

TRUSS TYPE T8

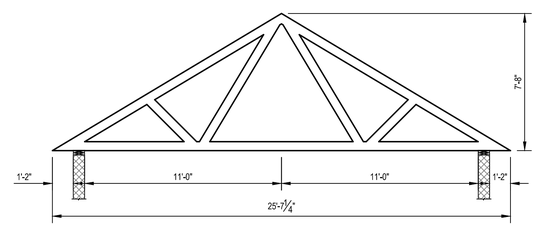

TRUSS TYPE T9

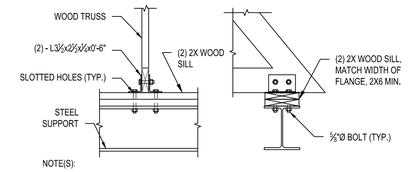

NOTE(S):

1. TRUSS MANUFACTUER MAY SUGGEST ALTERNATE CONNECTION TO ENGINEER FOR REVIEW AND APPROVAL

1 TRUSS BEARING ON STEEL BEAM

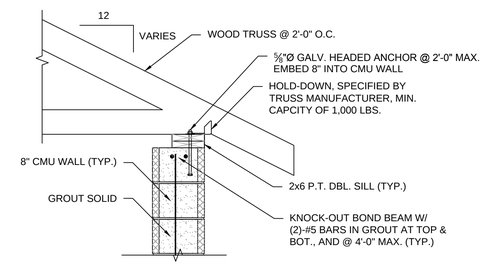

2 TRUSS BEARING ON CMU WALL

CONSTRUCTION DOCUMENTS
12/11/15

Weston&Sampson
273 Dividend Road, Rocky Hill, CT 06067
(860) 513-1473 (800) SAMPSON
www.westonandsampson.com

No.	Date	Dr.By	Ck.By	App.By	Description

A P P R O V E D

Dec. 11, 2015
DATE

REGISTERED PROFESSIONAL ENGINEER

STATE OF CONNECTICUT
RICHARD A. CAMPBELL
#14862
LICENSED
PROFESSIONAL ENGINEER
12-11-2015

TOWN OF GREENWICH – DEPARTMENT OF PUBLIC WORKS
RITCH AVENUE WEST, GREENWICH, CONNECTICUT
BYRAM PARK POOL REPLACEMENT

TRUSS ELEVATIONS AND DETAILS

CADD NO.	SCALE:	CONTRACT:	JOB NO.	DR.BY	DSN.BY	CHK.BY	APP.BY
GREENWICH	VARIES	–	2130336	CJW	NMS	RAC	RAC

FILE NO. S3.02

SHEET – OF –

GENERAL NOTES

A. CODE AND STANDARDS:
THE FOLLOWING CODE AND STANDARDS AND ALL REFERENCE STANDARDS THERE IN SHALL APPLY TO THE DESIGN, CONSTRUCTION AND QUALITY CONTROL OF ALL WORK PERFORMED ON THE PROJECT. USE THE LATEST EDITIONS UNLESS NOTED OTHERWISE. SAFETY AND CONSTRUCTION MEANS AND METHODS ARE THE SOLE RESPONSIBILITY OF THE CONTRACTOR.
1. 2005 STATE BUILDING CODE, STATE OF CONNECTICUT WITH THE 2009, 2011 AND 2013 AMENDMENTS.
2. INTERNATIONAL BUILDING CODE 2003
3. MINIMUM DESIGN LOADS FOR BUILDINGS AND OTHER STRUCTURES (SEI/ASCE 7–02), AMERICAN SOCIETY OF CIVIL ENGINEERS.
4. AMERICAN CONCRETE INSTITUTE (ACI)

B. DESIGN DATA:
1. EARTH LOADS
A. ACTIVE SOIL PRESSURE 40 PCF EQUIVALENT FLUID PRESSURE
B. PASSIVE SOIL PRESSURE 0 PSF
C. CONSTRUCTION LOADS 3 FEET OF EARTH PRESSURE

C. FOUNDATION GEOTECHNICAL REPORT:
1. FOUNDATIONS HAVE BEEN DESIGNED IN ACCORDANCE WITH THE GEOTECHNICAL REPORT PREPARED BY WESTON & SAMPSON DATED JULY 15, 2014.
2. ALL FOUNDATIONS SUSCEPTIBLE TO FROST SHALL BEAR A MINIMUM 3'–6" BELOW GRADE. IN CASE OF CONFLICT, NOTIFY THE STRUCTURAL ENGINEER IN ADVANCE OF ANY CONSTRUCTION TO ALLOW FOR ADJUSTMENT.
3. FOUNDATION TO BE PLACED ON NATIVE MEDIUM DENSE SAND AND GRAVEL AND/OR SILTY SAND DEPOSITS OR ON PROPERLY CONSTRUCTED COMPACT GRANULAR FILL HAVE BEEN DESIGNED USING AN ALLOWABLE BEARING PRESSURE OF 5000 PSF.

D. MATERIALS:
THE FOLLOWING ASTM STANDARDS AND DESIGN STRESSES SHALL BE USED FOR THE APPROPRIATE MATERIALS USED IN CONSTRUCTION OF THIS PROJECT,
1. CEMENT: ASTM C150 TYPE II
2. CONCRETE: ALL SITE CONCRETE SHALL BE NORMAL WEIGHT CONCRETE

APPLICATION	F'C @ 28 DAYS (PSI)
RETAINING WALL	4000
SLAB–ON–GRADE	4000
MECH./ELEC. EQUIPMENT PADS	4000

3. REINFORCEMENT: DEFORMED REINFORCING STEEL BARS– GRADE 60
4. STONE MASONRY UNITS: MORTAR – ASTM C270: TYPE S

E. CONSTRUCTION:
1. GENERAL
A. IN CASE OF CONFLICTS BETWEEN GENERAL NOTES, DETAILS AND SPECIFICATIONS, THE MOST STRINGENT REQUIREMENTS SHALL GOVERN.
B. TYPICAL DETAILS APPLY REPETITIVELY ON THE PROJECT. CONTRACTOR SHALL COORDINATE THE GENERAL REQUIREMENTS OF TYPICAL DETAILS WITH PROJECT CONDITIONS PLANS, SPECIFICATIONS AND SECTIONS.
C. THE REPRODUCTION OF ANY PORTION OF THE STRUCTURAL CONTRACT DRAWINGS FOR RESUBMITTAL AS SHOP DRAWINGS PRODUCED IN SUCH A MANNER WILL BE REJECTED AND RETURNED.
D. IMPLEMENTING JOB SITE SAFETY AND CONSTRUCTION PROCEDURES, TEMPORARY SHORING AND BRACING OF EXISTING CONSTRUCTION ARE THE SOLE RESPONSIBILITY OF THE CONTRACTOR.
E. CONTRACTOR SHALL COORDINATE WITH ALL ARCHITECTURAL, MECHANICAL, PLUMBING, ELECTRICAL AND CIVIL SITE DRAWINGS FOR SIZE AND LOCATIONS OF OPENINGS, SLEEVES, CONCRETE EQUIPMENT PADS AND INSERTS.

F. FOUNDATIONS & STRUCTURAL EARTHWORK:
1. GENERAL
A. SEE THE SPECIFICATIONS AND GEOTECHINCAL REPORT REQUIREMENTS AND SLAB–ON–GRADE SUBGRADE INCLUDING COMPACTION PROCEDURES.
B. ALL FOUNDATIONS SHALL BE PLACED AND COMPACTED GRANULAR FILL MATERIAL OR CONSOLIDATED EXISTING MATERIALS BEARING ELEVATIONS ARE ESTIMATED FROM SOIL BORING DATA INDICATED IN THE GEOTECHNICAL REPORT. DETERMINE FINAL BEARING ELEVATIONS AND FIELD VERIFICATION OF ALLOWABLE BEARING PRESSURE SHALL BE MADE BY AN EXPERIENCED, QUALIFIED GEOTECHNICAL ENGINEER PRIOR TO PLACING FOUNDATIONS.
C. CONCRETE SHALL BE PLACED ON SAME DAY SUBSURFACE APPROVAL IS GIVEN.
D. UTILITY LINES SHALL NOT BE PLACED THROUGH OR BELOW FOUNDATIONS WITHOUT THE STRUCTURAL ENGINEER'S APPROVAL.
E. ALL SHORING, SHEETING AND DEWATERING SHALL BE THE TOTAL RESPONSIBILITY OF THE CONTRACTOR. SHEETING AND SHORING SHALL BE DESIGNED BY THE CONTRACTOR'S ENGINEER REGISTERED IN THE STATE OF CONNECTICUT. ALL SUBMITTALS SHALL BEAR CONTRACTOR'S ENGINEER'S SEAL AND SIGNATURE.
2. BACKFILL
A. WHERE FINAL GRADE ELEVATIONS ARE APPROXIMATELY EQUAL ON BOTH SIDES OF A WALL, BACKFILL IN LIFTS TO MAINTAIN LEVEL ELEVATIONS WITHIN 12" ON BOTH SIDES AT ANY TIME.

G. CONCRETE:
1. CAST–IN–PLACE:
A. REINFORCING STEEL CLEAR COVER SHALL BE AS FOLLOWS UNLESS NOTED OTHERWISE:

CONCRETE CAST IN PLACE AND PERMANENTLY EXPOSED TO EARTH: 3"
CONCRETE EXPOSED TO EARTH AND WEATHER: 2"

B. CONSTRUCTION JOINTS AND CONTRACTION JOINTS IN SLAB ON GRADE SHALL BE ARRANGED TO LIMIT MAXIMUM AREA BETWEEN JOINTS TO 400 S.F. APPROXIMATELY SQUARE, ALLOW A MINIMUM OF 48 HOURS TIME BETWEEN PLACEMENT OF ADJACENT SECTIONS. SUBMIT JOINT LOCATIONS AND DETAILS FOR APPROVAL.

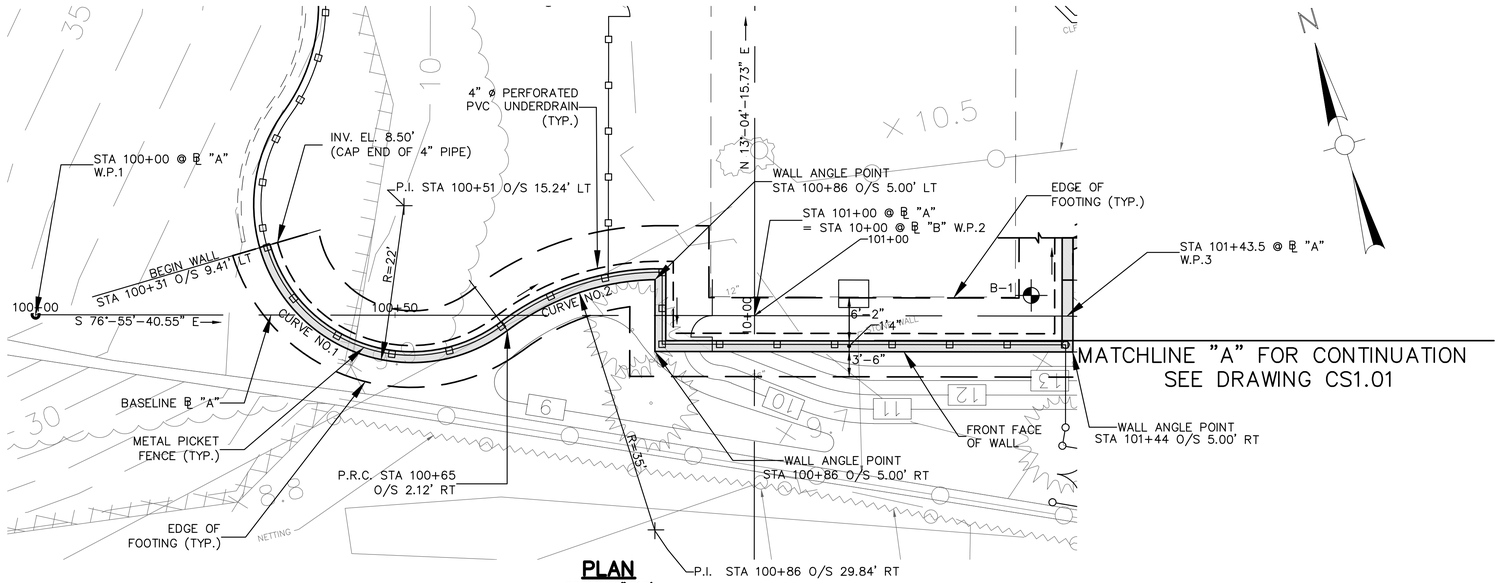

PLAN
SCALE: 1"=10'

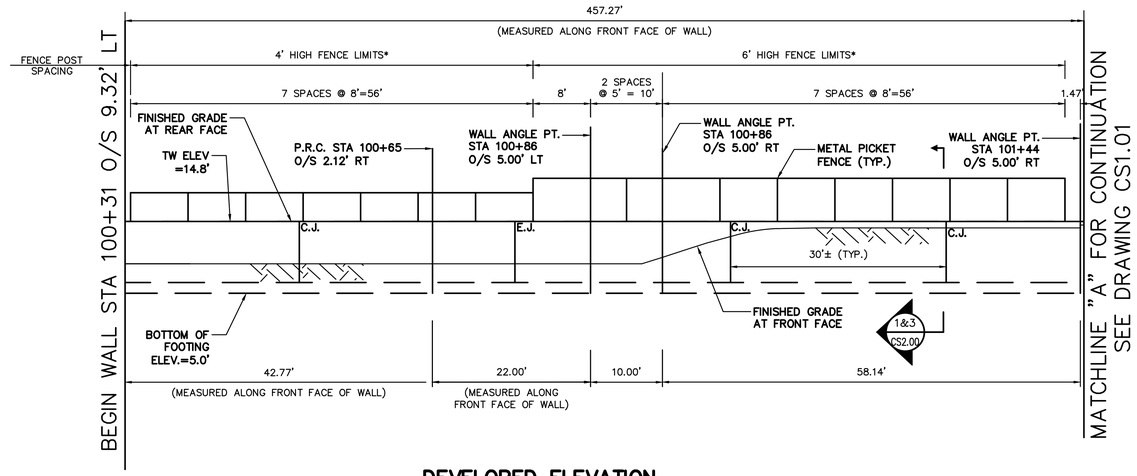

DEVELOPED ELEVATION
SCALE: 1"=10'

*FOR ADDITIONAL FENCE DETAILS SEE DRAWINGS CS2.00, CS2.01 & D1.07

WORKING POINT NOS. (W.P.)	COORDINATES	
	N	E
1	563877.59	752690.25
2	563854.97	752787.66
3	563845.13	752830.03
4	564147.11	752855.52

CURVE DATA	R	Δ	L
1	22ft	111°–23'–17.7"	42.77ft
2	35ft	36°–10'–41.5"	22.10ft

GENERAL NOTES CONTINUED.

C. ALL INSERTS AND SLEEVES SHALL BE CAST IN PLACE WHENEVER FEASIBLE. NO SLEEVE SHALL BE PLACED THROUGH ANY CONCRETE ELEMENT UNLESS AUTHORIZED BY THE STRUCTURAL DRAWINGS, APPROVED SLEEVING SUBMITTAL OR SPECIFICALLY AUTHORIZED IN WRITING BY THE STRUCTURAL ENGINEER.
D. CORE DRILLING SHALL NOT BE PERMITTED UNLESS AUTHORIZED IN WRITING BY THE STRUCTURAL ENGINEER.
E. SPLICES OF REINFORCING STEEL BARS SHALL BE AS DETAILED ON THE APPROVED PLACEMENT DRAWINGS OR AS AUTHORIZED BY THE STRUCTURAL ENGINEER. WHEN PERMITTED, SPLICES SHALL BE MADE BY CONTACT TENSION LAP SPLICE, UNLESS NOTED OTHERWISE.
F. ACTUAL SLAB THICKNESS MAY VARY DUE TO SUB GRADE PREPARATION. CONTRACTOR SHALL PROVIDE ADDITIONAL CONCRETE NECESSARY TO MAINTAIN A LEVEL SLAB SURFACE AT THE ELEVATIONS INDICATED.
G. DO NOT PLACE ANY TYPE OF CONDUITS/PIPES IN STRUCTURAL SLAB–ON–GRADE.
H. NO WELDING OF REINFORCING STEEL BARS SHALL BE PERMITTED UNLESS SPECIFICALLY CALLED FOR OR APPROVED BY THE STRUCTURAL ENGINEER.
I. SUBMIT MATERIAL TEST REPORTS FROM A QUALIFIED TESTING AGENCY DEMONSTRATING THAT THE TEST RESULTS FOR TRIAL MIX BATCHES FOR EACH CONCRETE MIX DESIGN COMPLY WITH ACI–301 AND THE ADDITIONAL REQUIREMENTS OF THE PROJECT CONTRACT DOCUMENTS.

REFERENCE NOTES:

1. C.J. – INDICATES CONTRACTION JOINT SEE DRAWING CS2.00
2. E.J. – INDICATES EXPANSION JOINT SEE DRAWING CS2.00
3. FOR TYPICAL WALL SECTION SEE DRAWING CS2.00
4. FOR TYPICAL MASONRY STONE FACING SEE DRAWING CS2.00
5. FOR CONCRETE SLAB DETAILS SEE DRAWING CS2.01
6. ✦ DENOTES BORING LOCATIONS

CONSTRUCTION DOCUMENTS
12/11/15

Weston&Sampson®
273 Dividend Road, Rocky Hill, CT 06067
(860) 513-1473 (800) SAMPSON
www.westonandsampson.com

No.	Date	Dr.By	Ck.By	App.By	Description	DATE
		A. P.	P. R.	O. V.	E. D.	12–15–15

REGISTERED PROFESSIONAL ENGINEER

STATE OF CONNECTICUT ★ PETER J. GRANDY ★ No. 15466 ★ LICENSED PROFESSIONAL ENGINEER

TOWN OF GREENWICH – DEPARTMENT OF PUBLIC WORKS
RITCH AVENUE WEST, GREENWICH, CONNECTICUT
BYRAM PARK POOL REPLACEMENT
STRUCTURAL DETAILS

CADD NO.	SCALE:	CONTRACT:	JOB NO.	DR.BY	DSN.BY	CHK.BY	APP.BY
GREENWICH	AS SHOWN	–	2130336	L.E.C.	P.J.G.	P.J.G.	C.B.W.

CS1.00
FILE NO.

SHEET – OF –

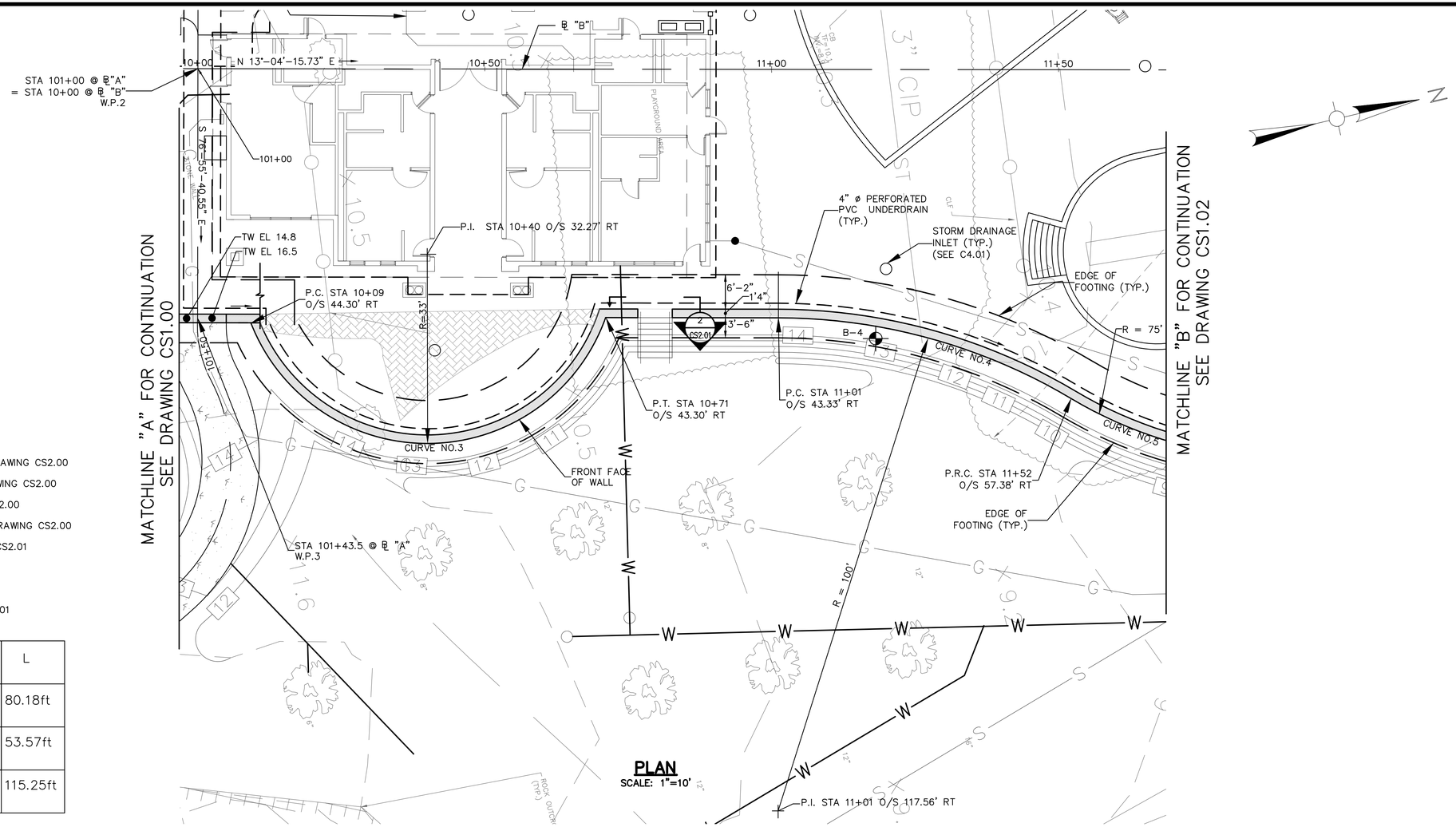

PLAN

SCALE: 1"=10'

REFERENCE NOTES:

1. C.J. – INDICATES CONTRACTION JOINT SEE DRAWING CS2.00
2. E.J. – INDICATES EXPANSION JOINT SEE DRAWING CS2.00
3. FOR TYPICAL WALL SECTION SEE DRAWING CS2.00
4. FOR TYPICAL MASONRY STONE FACING SEE DRAWING CS2.00
5. FOR CONCRETE SLAB DETAILS SEE DRAWING CS2.01
6. FOR GENERAL NOTES SEE DRAWING CS1.00
7. FOR STAIR DETAILS SEE DRAWING CS2.01
8. FOR TYPICAL PIPE SLEEVE SEE DRAWING CS2.01

CURVE DATA	R	Δ	L
3	33ft	139°-12'-08.2"	80.18ft
4	100ft	30°-41'-36.1"	53.57ft
5	75ft	88°-02'-40.4"	115.25ft

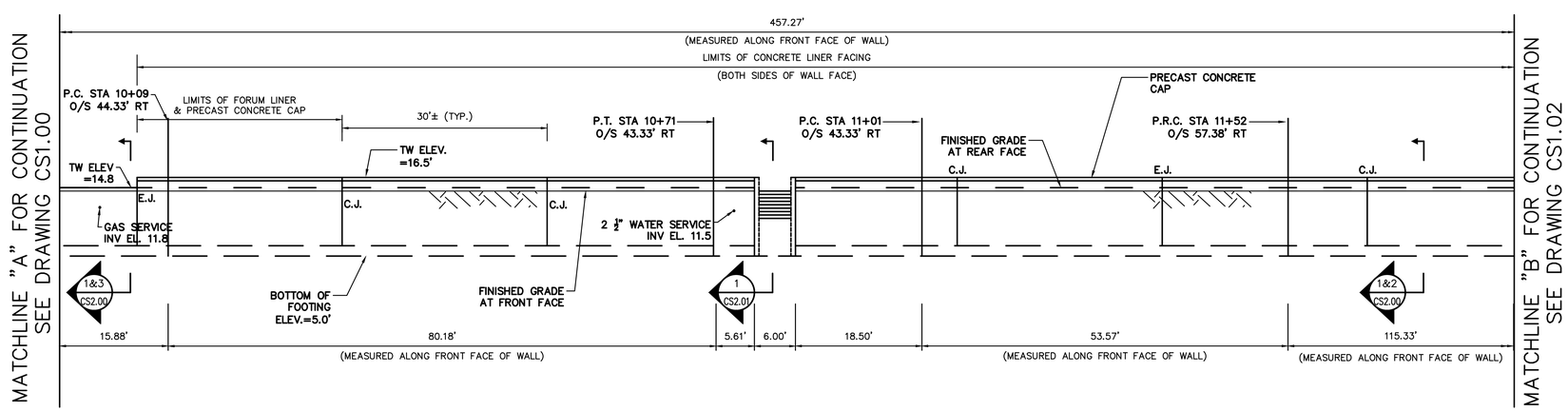

DEVELOPED ELEVATION

SCALE: 1"=10'

CONSTRUCTION DOCUMENTS
12/11/15

Weston&Sampson®
273 Dividend Road, Rocky Hill, CT 06067
(860) 513-1473 (800) SAMPSON
www.westonandsampson.com

No.	Date	Dr.By	Ck.By	App.By	Description
A	P	P	R	O	V E D

12-15-15
DATE

REGISTERED PROFESSIONAL ENGINEER

STATE OF CONNECTICUT ★ PETER J. GRANDY ★ No. 15466 ★ LICENSED PROFESSIONAL ENGINEER

TOWN OF GREENWICH – DEPARTMENT OF PUBLIC WORKS
RITCH AVENUE WEST, GREENWICH, CONNECTICUT
BYRAM PARK POOL REPLACEMENT

STRUCTURAL DETAILS

CADD NO.	SCALE:	CONTRACT:	JOB NO.	DR.BY	DSN.BY	CHK.BY	APP.BY
GREENWICH	AS SHOWN	–	2130336	L.E.C.	P.J.G.	P.J.G.	C.B.W.

CS1.01

FILE NO.

SHEET – OF –

CURVE DATA	R	Δ	L
5	75ft	88°–02'–40.4"	115.25ft
6	100ft	12°–20'–50.1"	21.50ft

REFERENCE NOTES:

1. C.J. – INDICATES CONTRACTION JOINT SEE DRAWING CS2.00
2. E.J. – INDICATES EXPANSION JOINT SEE DRAWING CS2.00
3. FOR TYPICAL WALL SECTION SEE DRAWING CS2.00
4. FOR TYPICAL MASONRY STONE FACING SEE DRAWING CS2.00
5. FOR CONCRETE SLAB DETAILS SEE DRAWING CS2.01
6. FOR GENERAL NOTES SEE DRAWING CS1.00
7. FOR STAIR DETAILS SEE DRAWING CS2.01
8. ✦ DENOTES BORING LOCATIONS
9. FOR TYPICAL PIPE SLEEVE SEE DRAWING CS2.01

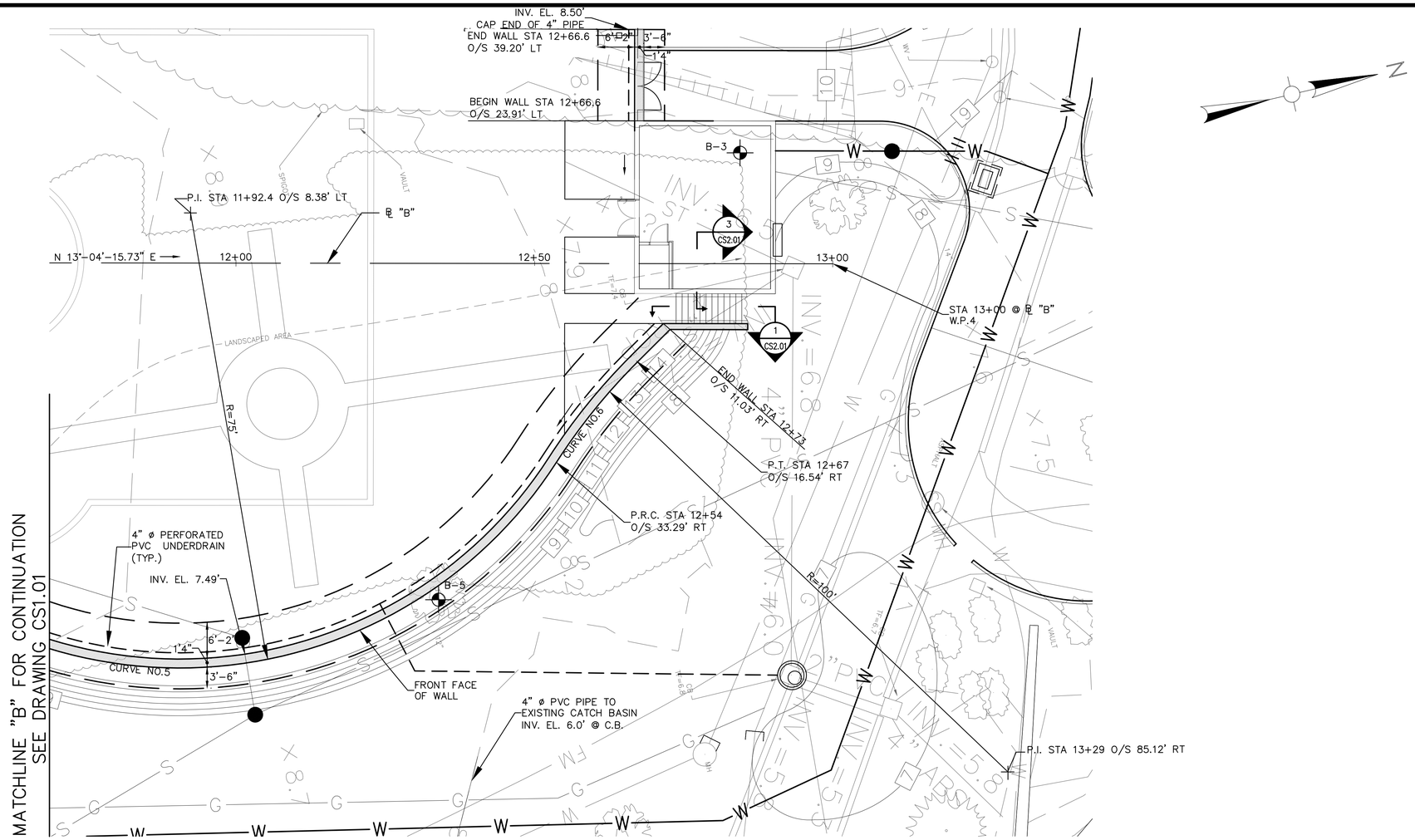

PLAN
SCALE: 1"=10'

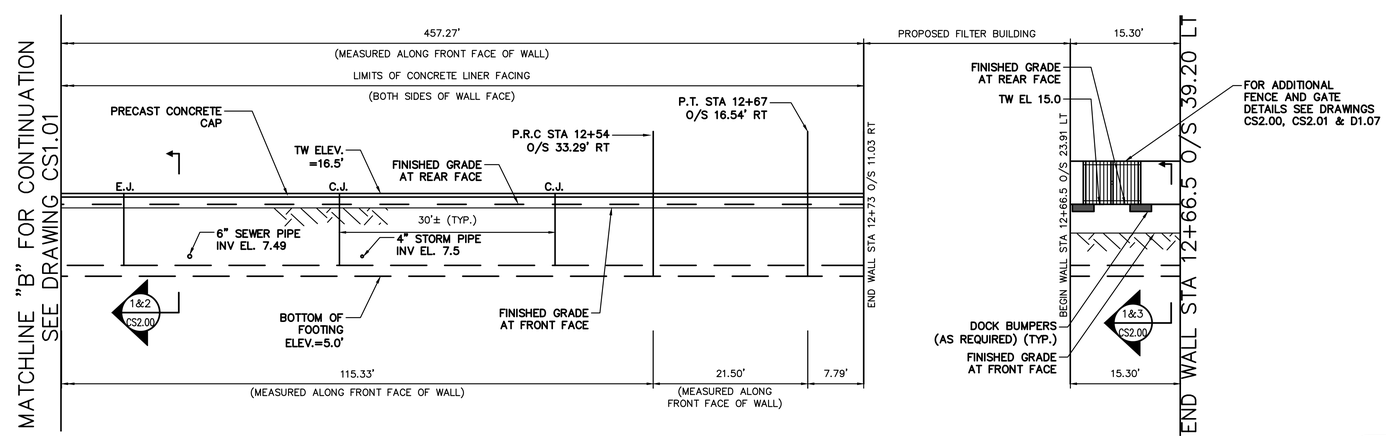

DEVELOPED ELEVATION
SCALE: 1"=10'

CONSTRUCTION DOCUMENTS
12/11/15

Weston&Sampson®
273 Dividend Road, Rocky Hill, CT 06067
(860) 513-1473 (800) SAMPSON
www.westonandsampson.com

No.	Date	Dr.By	Ck.By	App.By	Description
		A. P.	P. R.	O. V.	E. D.

REGISTERED PROFESSIONAL ENGINEER — 12-15-15 DATE

STATE OF CONNECTICUT — PETER J. GRANDY — No. 15466 — LICENSED PROFESSIONAL ENGINEER

TOWN OF GREENWICH – DEPARTMENT OF PUBLIC WORKS
RITCH AVENUE WEST, GREENWICH, CONNECTICUT
BYRAM PARK POOL REPLACEMENT
STRUCTURAL DETAILS

CADD NO.	SCALE:	CONTRACT:	JOB NO.	DR.BY	DSN.BY	CHK.BY	APP.BY
GREENWICH	AS SHOWN	–	2130336	L.E.C.	P.J.G.	P.J.G.	C.B.W.

CS1.02
FILE NO.
SHEET – OF –

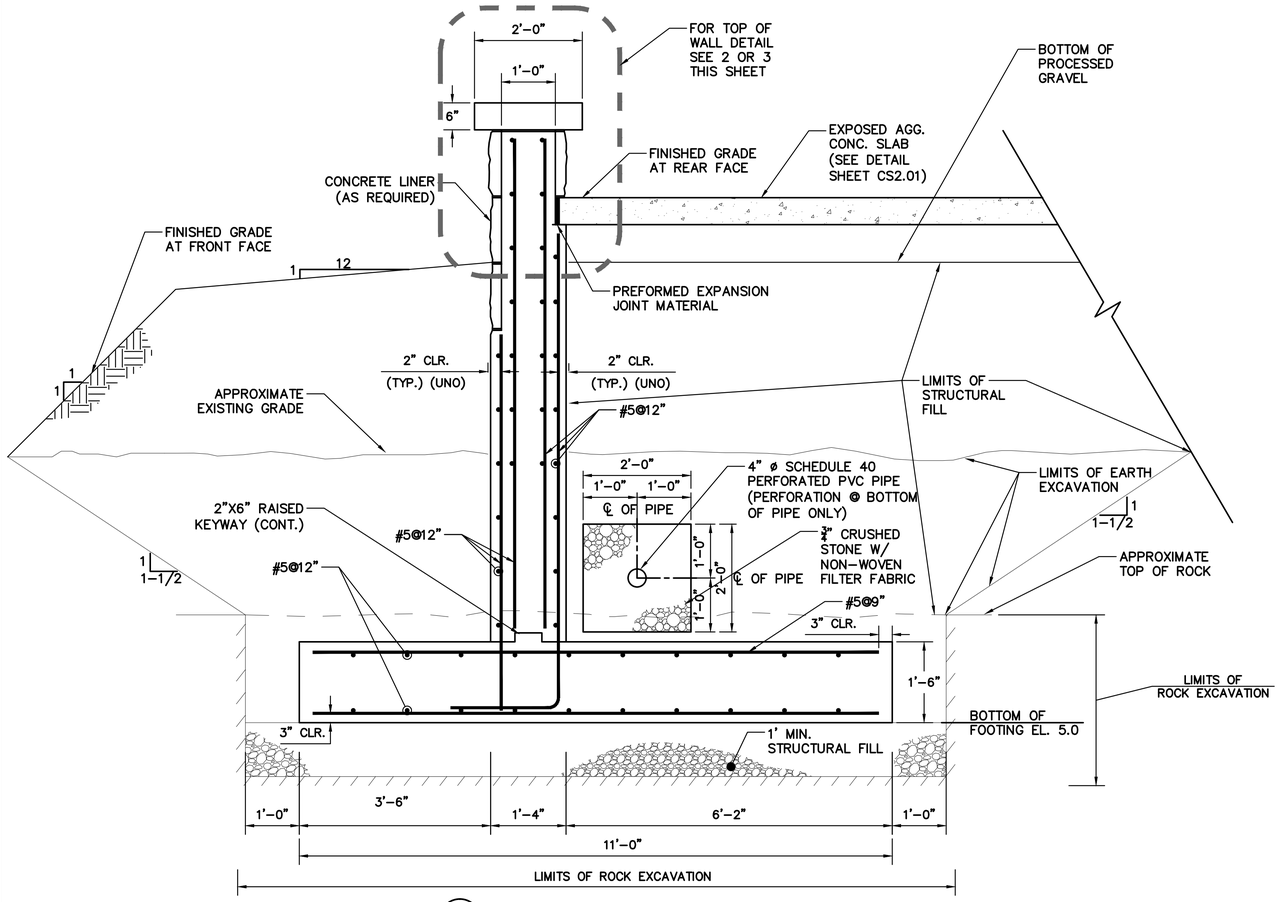

1 CS2.00 TYPICAL RETAINING WALL SECTION
SCALE: 3/4" = 1'-0"

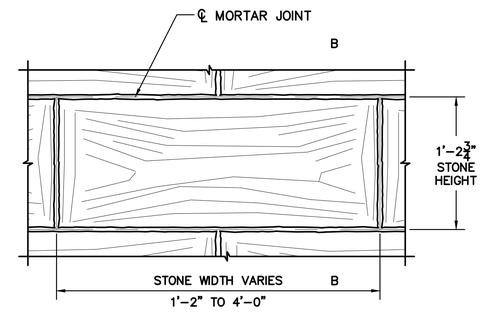

FORM LINER – STONE PATTERN – ALTERNATE "A"
SCALE: 1-1/2" = 1'-0"

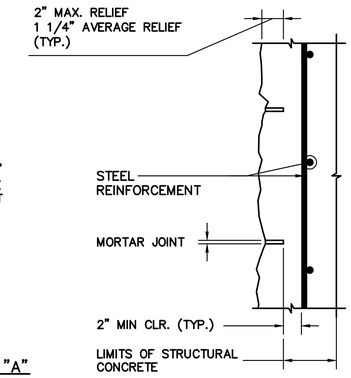

SECTION B–B
SCALE: 1-1/2" = 1'-0"

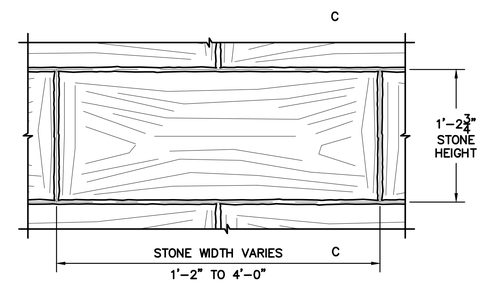

FORM LINER – STONE PATTERN – ALTERNATE "B"
SCALE: 1-1/2" = 1'-0"

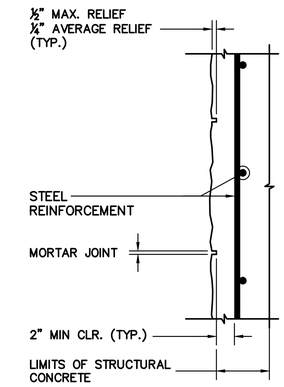

SECTION C–C
SCALE: 1-1/2" = 1'-0"

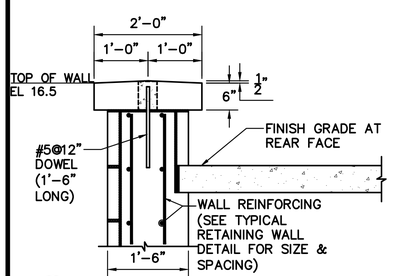

2 CS2.00 TYPICAL PRECAST CONCRETE CAP
SCALE: 3/4" = 1'-0"

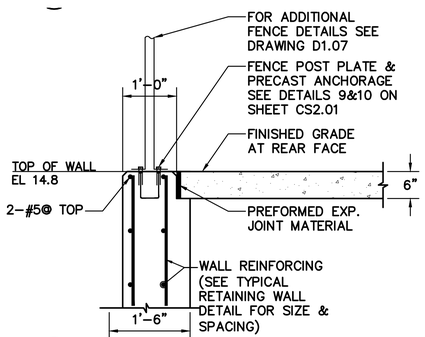

3 CS2.00 TYPICAL TOP OF WALL WITH FENCE
SCALE: 3/4" = 1'-0"

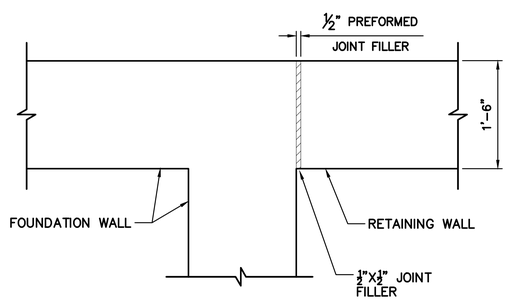

4 CS2.00 EXPANSION JOINT BETWEEN BUILDING AND RETAINING WALL
SCALE: 1-1/2" = 1'-0"

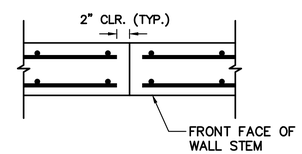

5 CS2.00 TYPICAL WALL CONTRACTION JOINT DETAIL
SCALE: 1" = 1'-0"

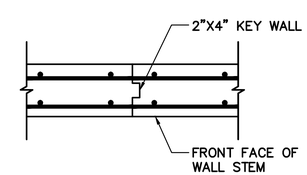

6 CS2.00 TYPICAL WALL CONSTRUCTION JOINT DETAIL
SCALE: 1" = 1'-0"

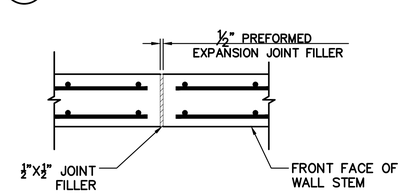

7 CS2.00 TYPICAL WALL EXPANSION JOINT DETAIL
SCALE: 1" = 1'-0"

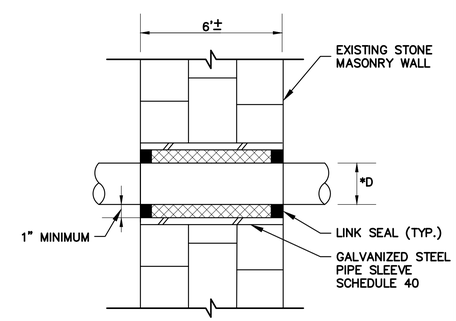

8 CS2.00 PIPE PENETRATION AT EXISTING STONE MASONRY WALL DETAIL
NTS

*D= DIAMETER OF PROPOSED PIPE PLUS PIPE WALL THICKNESS

PIPE SLEEVE INSTRUCTION NOTES:

1. DRILL THROUGH EXISTING STONE MASONRY WALL.
2. INSTALL GALVANIZED STEEL PIPE THROUGH SLEEVE.
3. PLACE PROPOSED PIPE THROUGH SLEEVE.
4. INSTALL LINK SEALS AT BOTH FACES OF EXISTING STONE MASONRY WALL.
5. PIPE SLEEVE INSTALLATION MAY VARY WITH PERMISSION OF THE ENGINEER.

CONSTRUCTION DOCUMENTS
12/11/15

Weston&Sampson®
273 Dividend Road, Rocky Hill, CT 06067
(860) 513-1473 (800) SAMPSON
www.westonandsampson.com

No.	Date	Dr.By	Ck.By	App.By	Description	DATE
		A. P.	P. R.	O. V.	E. D.	12-15-15

REGISTERED PROFESSIONAL ENGINEER

STATE OF CONNECTICUT ★ PETER T. GRANDY ★ No. 15495 ★ LICENSED PROFESSIONAL ENGINEER

TOWN OF GREENWICH – DEPARTMENT OF PUBLIC WORKS
RITCH AVENUE WEST, GREENWICH, CONNECTICUT
BYRAM PARK POOL REPLACEMENT

STRUCTURAL DETAILS

CADD NO.	SCALE:	CONTRACT:	JOB NO.	DR.BY	DSN.BY	CHK.BY	APP.BY
GREENWICH	AS SHOWN	–	2130336	L.E.C.	P.J.G.	P.J.G.	C.B.W.

FILE NO.

CS2.00

SHEET – OF –

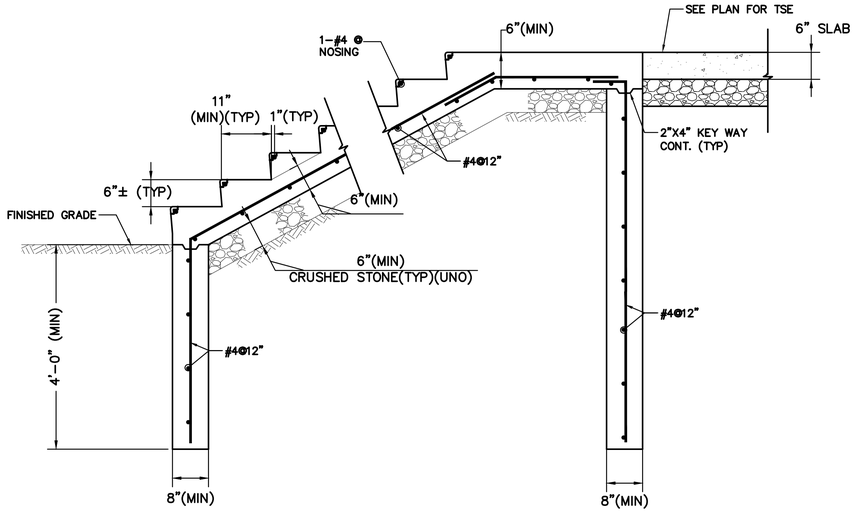

1 CS2.01 TYPICAL STAIR DETAIL
SCALE: 3/4" = 1'-0"

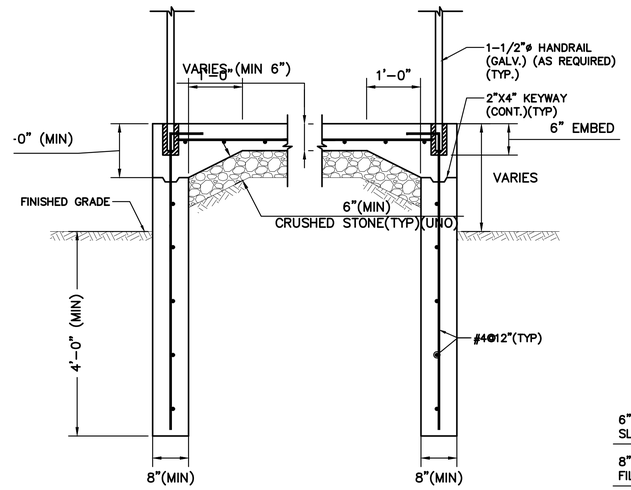

2 CS2.01 TYPICAL STAIR SECTION
SCALE: 3/4" = 1'-0"

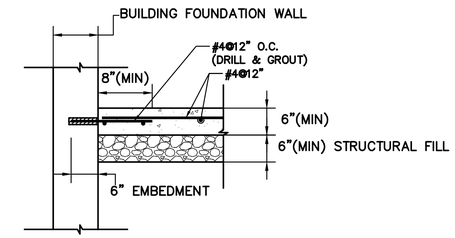

3 CS2.01 TYPICAL STAIR SECTION AT FOUNDATION WALL
SCALE: 3/4" = 1'-0"

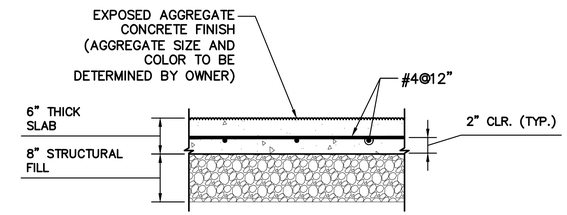

5 CS2.01 TYPICAL EXPOSED AGGREGATE CONCRETE SLAB SECTION
SCALE: 1" = 1'-0"

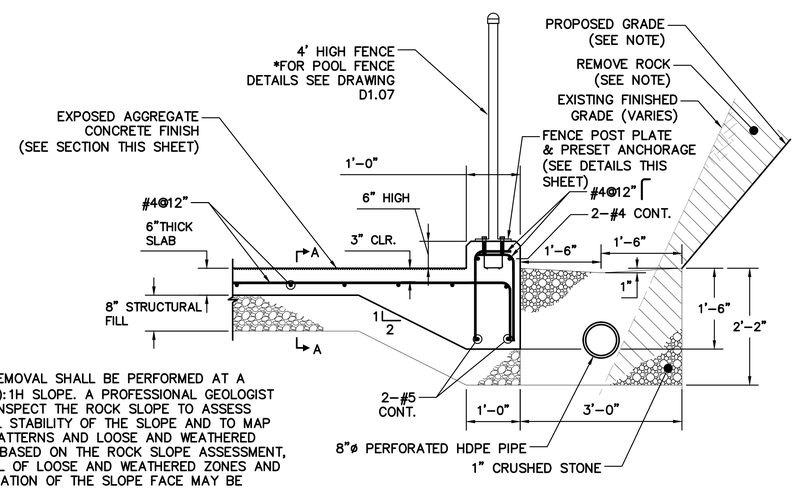

NOTE:
ROCK REMOVAL SHALL BE PERFORMED AT A 1V(MAX.):1H SLOPE. A PROFESSIONAL GEOLOGIST SHALL INSPECT THE ROCK SLOPE TO ASSESS OVERALL STABILITY OF THE SLOPE AND TO MAP JOINT PATTERNS AND LOOSE AND WEATHERED ZONES. BASED ON THE ROCK SLOPE ASSESSMENT, REMOVAL OF LOOSE AND WEATHERED ZONES AND STABILIZATION OF THE SLOPE FACE MAY BE REQUIRED. A STEEPER ROCK SLOPE MAY BE ALLOWED AT THE RECOMMENDATION OF THE GEOLOGIST. THE GEOLOGIST WORK SHALL BE PERFORMED AT THE CONTRACTOR'S EXPENSE.

4 CS2.01 TYPICAL CURBING WITH FENCE SECTION
SCALE: 3/4" = 1'-0"

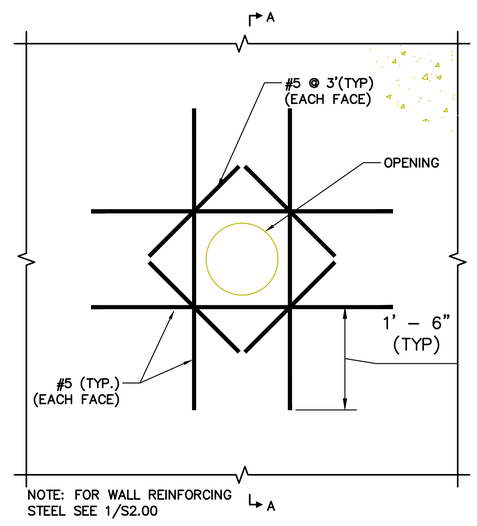

NOTE: FOR WALL REINFORCING STEEL SEE 1/S2.00

6 CS2.01 TYPICAL PIPE PENETRATION DETAIL
NTS

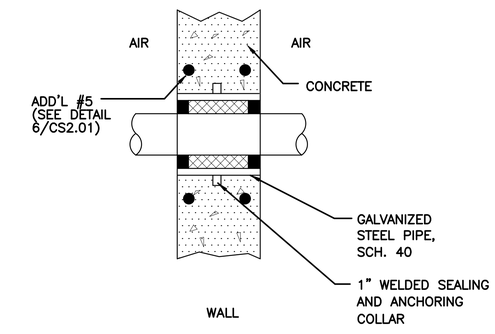

7 CS2.01 SECTION A-A TYPICAL PIPING SLEEVE DETAIL
NTS

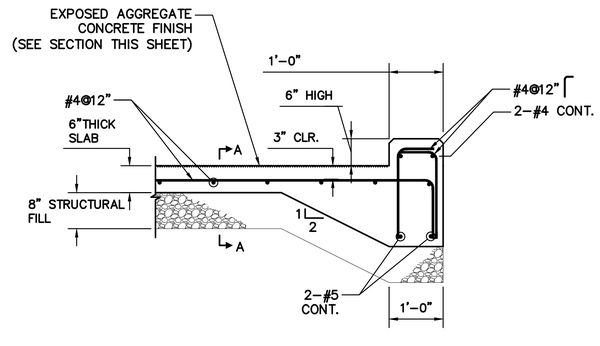

11 CS2.01 TYPICAL CURBING SECTION
SCALE: 3/4" = 1'-0"

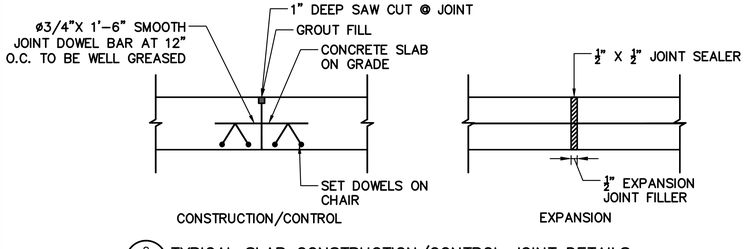

8 CS2.01 TYPICAL SLAB CONSTRUCTION/CONTROL JOINT DETAILS
NTS

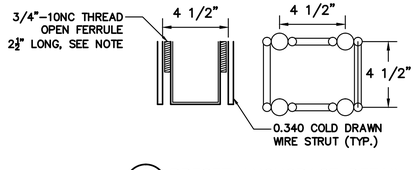

9 CS2.01 PRESET ANCHORAGE DETAIL
SCALE: NTS

NOTE A: ALTERNATIVELY, 2 1/2" LONG CLOSE END FERRULE. PROVIDE A MINIMUM FULL LENGTH OF 2", MAY BE USED.

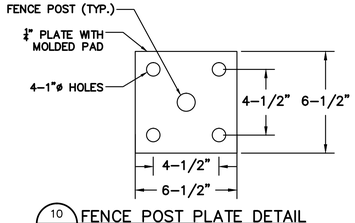

10 CS2.01 FENCE POST PLATE DETAIL
SCALE: NTS

CONSTRUCTION DOCUMENTS
12/11/15

Weston&Sampson®
273 Dividend Road, Rocky Hill, CT 06067
(860) 513-1473
(800) SAMPSON
www.westonandsampson.com

No.	Date	Dr.By	Ck.By	App.By	Description
		A. P.	P. R.	O. V.	E D

12-15-15
DATE

REGISTERED PROFESSIONAL ENGINEER

STATE OF CONNECTICUT ★ PETER J. GRANDY ★ No. 15495 ★ LICENSED PROFESSIONAL ENGINEER

TOWN OF GREENWICH – DEPARTMENT OF PUBLIC WORKS
RITCH AVENUE WEST, GREENWICH, CONNECTICUT
BYRAM PARK POOL REPLACEMENT
STRUCTURAL DETAILS

CADD NO.	SCALE:	CONTRACT:	JOB NO.	DR.BY	DSN.BY	CHK.BY	APP.BY
GREENWICH	AS SHOWN	–	2130336	L.E.C.	P.J.G.	P.J.G.	C.B.W.

FILE NO.

CS2.01

SHEET – OF –

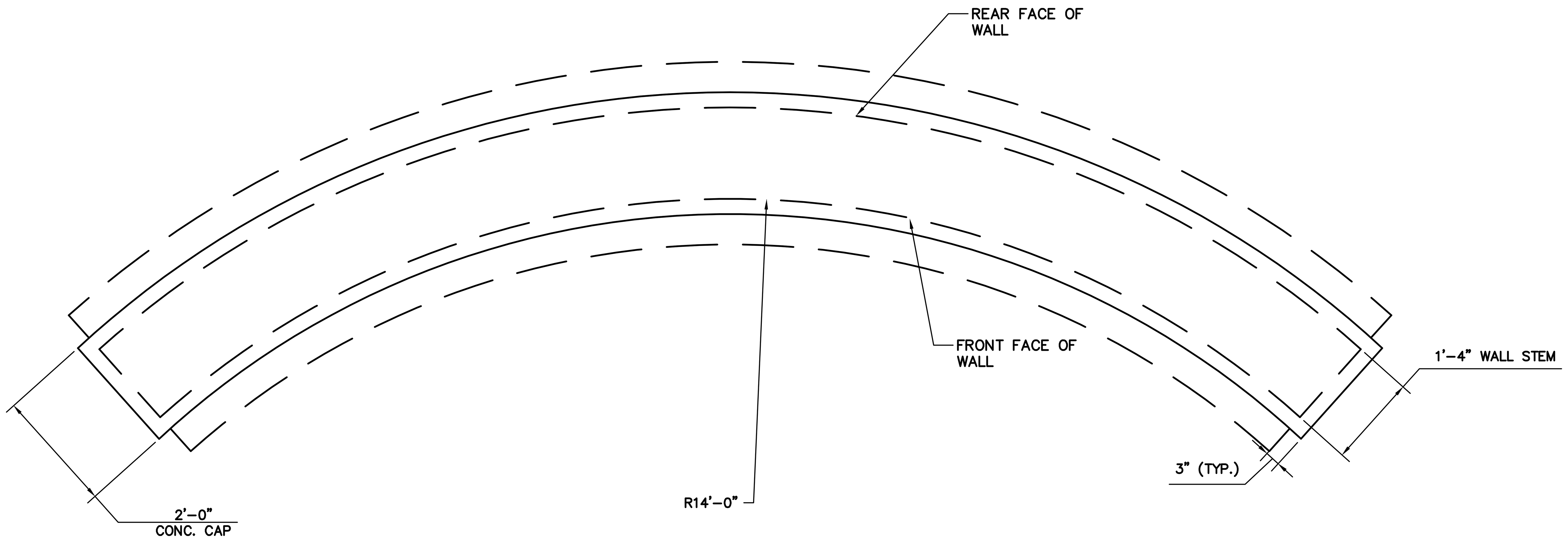

ENTRANCE WALL PLAN VIEW (1/CS2.02)
SCALE: 3/4" = 1'-0"

NOTE: FOR ENTRANCE WALL LOCATION SEE CIVIL SITE AND LANDSCAPE ARCHITECTURAL DRAWINGS

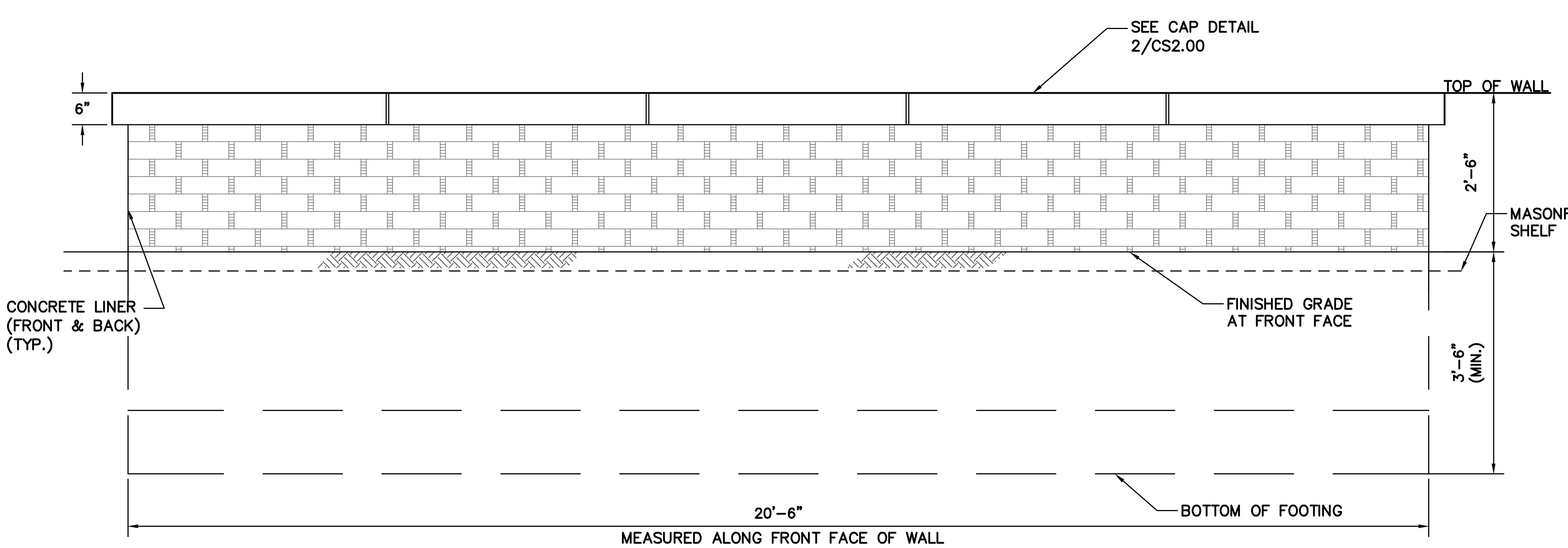

ENTRANCE WALL DEVELOPED ELEVATION (2/CS2.02)
SCALE: 3/4" = 1'-0"

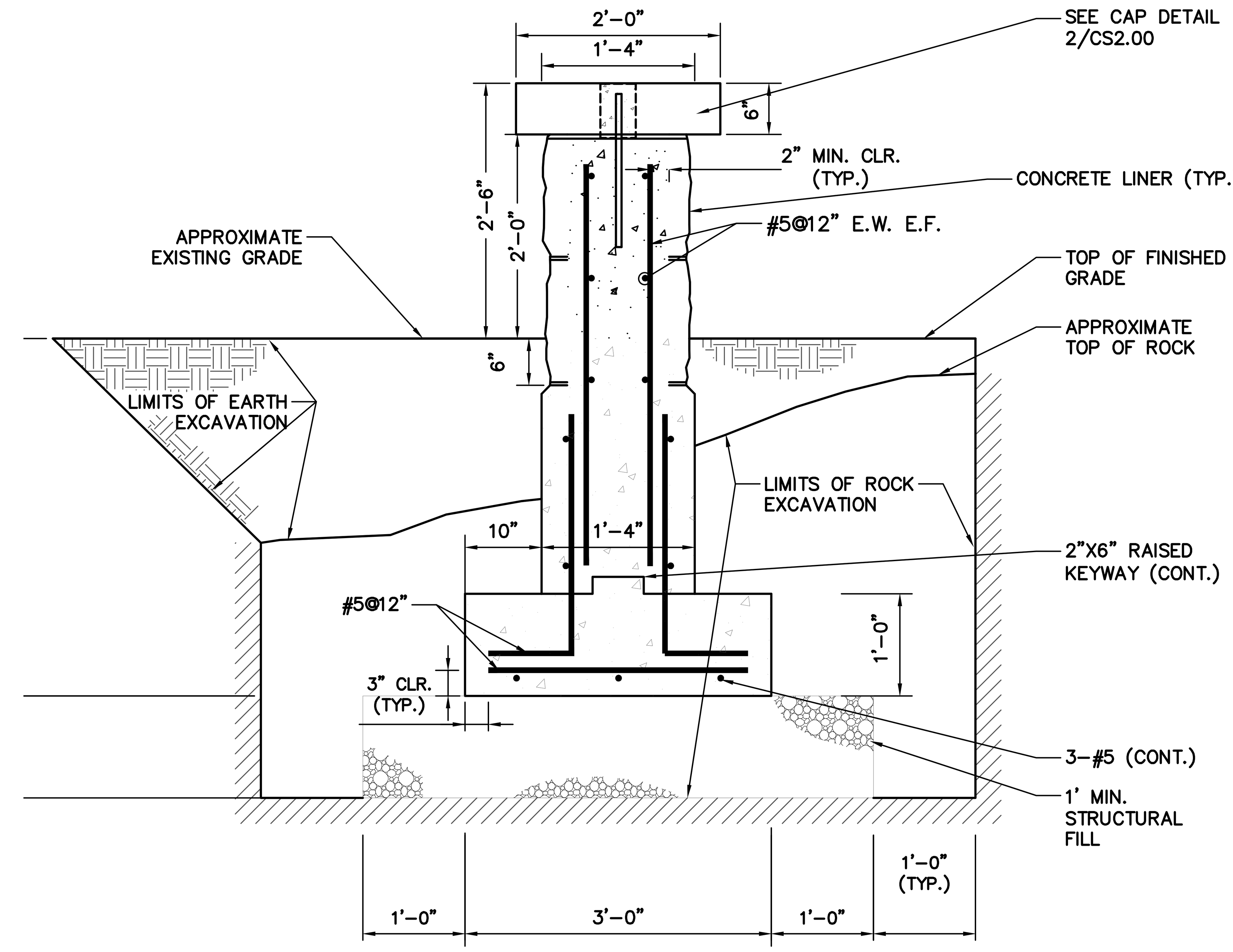

CONSTRUCTION DOCUMENTS
12/11/15

Weston&Sampson®
273 Dividend Road, Rocky Hill, CT 06067
(860) 513-1473 (800) SAMPSON
www.westonandsampson.com

No.	Date	Dr.By	Ck.By	App.By	Description

A P P R O V E D

REGISTERED PROFESSIONAL ENGINEER — 12-15-15 DATE

STATE OF CONNECTICUT ★ PETER J. GRANDY No. 15495 LICENSED PROFESSIONAL ENGINEER ★

TOWN OF GREENWICH – DEPARTMENT OF PUBLIC WORKS
RITCH AVENUE WEST, GREENWICH, CONNECTICUT
BYRAM PARK POOL REPLACEMENT

ENTRANCE WALL
ELEVATION, SECTION AND PLAN

CADD NO.	SCALE:	CONTRACT:	JOB NO.	DR.BY	DSN.BY	CHK.BY	APP.BY
GREENWICH	AS SHOWN	–	2130336	L.E.C.	P.J.G.	P.J.G.	C.B.W.

FILE NO.

CS2.02

SHEET – OF –

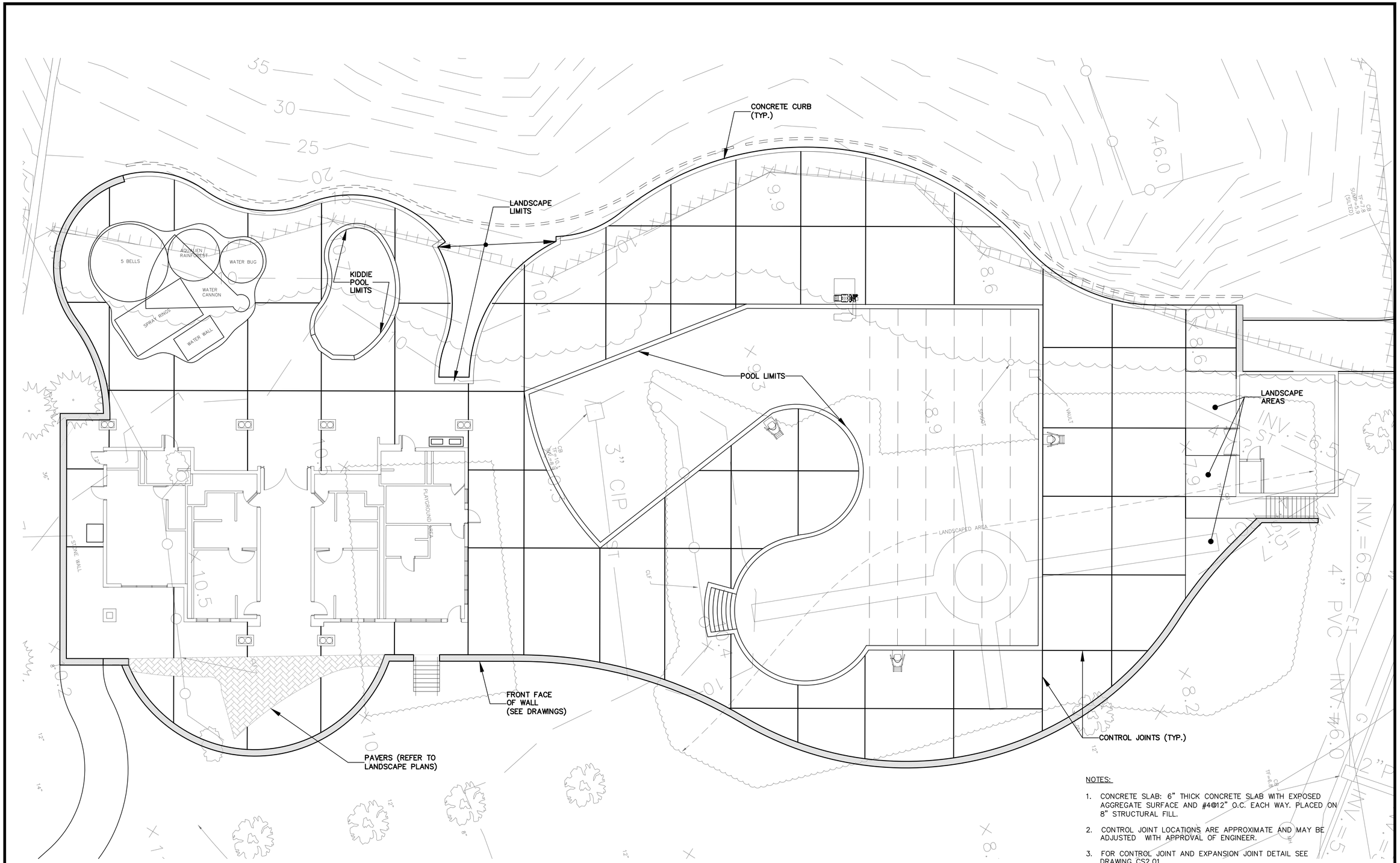

SLAB PLAN

SCALE: 1"=10'

0 10' 20' 30'

NOTES:

1. CONCRETE SLAB: 6" THICK CONCRETE SLAB WITH EXPOSED AGGREGATE SURFACE AND #4@12" O.C. EACH WAY. PLACED ON 8" STRUCTURAL FILL.
2. CONTROL JOINT LOCATIONS ARE APPROXIMATE AND MAY BE ADJUSTED WITH APPROVAL OF ENGINEER.
3. FOR CONTROL JOINT AND EXPANSION JOINT DETAIL SEE DRAWING CS2.01.

CONSTRUCTION DOCUMENTS
12/11/15

Weston&Sampson®
273 Dividend Road, Rocky Hill, CT 06067
(860) 513-1473 (800) SAMPSON
www.westonandsampson.com

No.	Date	Dr.By	Ck.By	App.By	Description
		A	P	R	O V E D

12-15-15
DATE

REGISTERED PROFESSIONAL ENGINEER

STATE OF CONNECTICUT ★ PETER J. GRANDY ★ No. 15466 ★ LICENSED PROFESSIONAL ENGINEER

TOWN OF GREENWICH – DEPARTMENT OF PUBLIC WORKS
RITCH AVENUE WEST, GREENWICH, CONNECTICUT
BYRAM PARK POOL REPLACEMENT
SLAB PLAN

CADD NO.	SCALE:	CONTRACT:	JOB NO.	DR.BY	DSN.BY	CHK.BY	APP.BY
GREENWICH	1"=10'	–	2130336	L.E.C.	P.J.G.	P.J.G.	C.B.W.

FILE NO.

CS2.03

SHEET – OF –

ABBREVIATIONS

AFF	ABOVE FINISHED FLOOR
AC	ALTERNATING CURRENT
A	AMPERE
ATC	AUTOMATIC TEMPERATURE CONTROLS
ATS	AUTOMATIC TRANSFER SWITCH
BKR	BREAKER
C	CONDUIT
CKT	CIRCUIT
CB	CIRCUIT BREAKER
EC	ELECTRICAL CONTRACTOR
EMT	ELECTRIC METALLIC TUBING
EWC	ELECTRIC WATER COOLER
EWH	ELECTRIC WATER HEATER
EF	EXHAUST FAN
FL	FLOOR
FLA	FULL LOAD AMPERE
GC	GENERAL CONTRACTOR
GFI	GROUND FAULT INTERRUPTER
GND	GROUND
HOA	HAND OFF AUTOMATIC
HP	HORSEPOWER
IG	ISOLATED GROUND
JB	JUNCTION BOX
KVA	KILOVOLT AMPERES
KW	KILOWATT
MCB	MAIN CIRCUIT BREAKER
MLO	MAIN LUGS ONLY
MC	MECHANICAL CONTRACTOR
MTD	MOUNTED
MTG	MOUNTING
NMC	NON-METALLIC CONDUIT
NC	NORMALLY CLOSED
NO	NORMALLY OPEN
NA	NOT APPLICABLE
NIC	NOT IN CONTRACT
NTS	NOT TO SCALE
PNL	PANELBOARD
PH	PHASE
PVC	POLYVINYL CHLORIDE CONDUIT
RSC	RIGID GALVANIZED STEEL CONDUIT
SF	SUPPLY FAN
SS	SAFETY SWITCH
TEL	TELEPHONE
TRF	TRANSFORMER
V	VOLTS
W	WATTS OR WIRE
WP	WEATHERPROOF
4WSN	4-WIRE SOLID NEUTRAL

RECEPTACLE ABBREVIATIONS

BF	BELOW FLOOR
CLG	CEILING MOUNTED
D	DEDICATED DEVICE ON INDIVIDUAL BRANCH CIRCUIT
E	EMERGENCY
GFI	GROUND FAULT CIRCUIT INTERUPTER, PERSONAL PROTECTION
IG	ISOLATED GROUND RECEPTACLE WITH SEPERATE GREEN GROUND CONDUCTOR TO ISOLATED GROUND BUS IN PANEL
SP	SURGE PROTECTION RECEPTACLE
WP	WEATHERPROOF RECEPTACLE WITH COVERPLATE LISTED FOR WET LOCATION WITH AN ATTACHMENT PLUG INSERTED.

LEGEND

RACEWAY AND WIRING

1,3 LP1B — HOMERUN TO PANELBOARD, NUMBER OF TICKS INDICATES NUMBER OF #12 AWG CONDUCTORS CONTAINED IN RACEWAY. TWO (2) #12 AWG SHALL NOT BE INDICATED BY TICKS, NUMERALS 1 AND 3 INDICATE CIRCUITS IN PANELBOARD. RACEWAYS LARGER THAN 1/2" AND CONDUCTORS LARGER THAN #12 AWG SHALL BE INDICATED ON THE DRAWINGS. PROVIDE AN INSULATED GREEN GROUND WIRE IN ALL RACEWAYS MINIMUM SIZE TO BE #12AWG.

RACEWAY

FLEXIBLE CONNECTION

DIRECT HARD WIRED CONNECTION

LIGHTING FIXTURES

A 1a — 1'x4' FLUORESCENT FIXTURE "A" DENOTES FIXTURE TYPE; NUMERAL DENOTES CIRCUIT NUMBER. "a" SUBSCRIPT DENOTES SWITCH CONTROL WHERE SHOWN.

B 1b — SURFACE OR RECESSED MOUNTED INCANDESCENT, HID OR COMPACT FLUORESCENT FIXTURE. "B" DENOTES FIXTURE TYPE, NUMERAL DENOTES CIRCUIT NUMBER, "b" SUBSCRIPT DENOTES SWITCH CONTROL WHERE SHOWN. FIXTURES THAT ARE FILLED IN SOLID DENOTE NIGHT LIGHT (COMBINATION NIGHT/EMERGENCY LIGHT).

WALL MOUNTED FIXTURE. SEE NOMENCLATURE ABOVE FOR INCANDESCENT FIXTURE.

5 — EXIT SIGN CEILING OR PENDANT MOUNTED. ARROWS DENOTE DIRECTION OF EGRESS. NUMERAL DENOTES CIRCUIT NUMBER. SHADED CHEVRONS DENOTE EXIT FACES.

5 — WALL MOUNTED EXIT SIGN. ARROWS DENOTE DIRECTION OF EGRESS. NUMERAL DENOTES CIRCUIT NUMBER. SHADED CHEVRONS DENOTE EXIT FACES.

7 — EMERGENCY LIGHTING BATTERY UNIT, TWIN OR SINGLE LAMP HEAD. NUMERAL DENOTES CIRCUIT NUMBER

LIGHTING CONTROL SWITCHES

(MOUNT 4'-0" AFF UNLESS NOTED OTHERWISE.)

S_a — SINGLE POLE SWITCH (120/277V) MOUNTED 4'-0" ABOVE FINISHED FLOOR. ALL OTHER MOUNTING HEIGHTS SHALL BE AS NOTED ON THE DRAWINGS. "a" SUBSCRIPT DENOTES CIRCUITS CONTROLLED.

S_3 — THREE WAY SWITCH. SEE NOMENCLATURE FOR SINGLE POLE SWITCH.

S_T — LOW VOLTAGE TIMER SWITCH. SWITCH TO BE MOUNTED 48"AFF. SUBSCRIPT DENOTES FIXTURES CONTROLLED. TIMER SWITCH TO BE WATT STOPPER MODEL NO TS-200-24.

S_D — SINGLE POLE WALL BOX DIMMER SWITCH MOUNTED 4'-0" A.F.F. "a" SUBSCRIPT DENOTES CIRCUIT CONTROLLED.

S_M — MOTOR THERMAL SWITCH

S_{WP} — WEATHERPROOF SINGLE-POLE SWITCH. MOUNTING HEIGHT 48"AFF.

PC — PHOTO-ELECTRIC CELL

TELECOMMUNICATIONS

WALL MOUNTED COMMUNICATIONS RECEPTACLE LOCATED 18"AFF. PROVIDE BACK BOX, SINGLE GANG PLASTER RING AND 3/4"EMT RACEWAY TO ABOVE THE HUNG OR ACCESSIBLE CEILING. RACEWAY TO TERMINATE ABOVE PARTITION WITH A 90° SWEEP AND INSULATED BUSHING.

W — WALL MOUNTED TELEPHONE RECEPTACLE LOCATED 18"AFF. ("W" ADJACENT TO THE SYMBOL DENOTES 54"AFF). PROVIDE BACK BOX, SINGLE GANG PLASTER RING AND 3/4"EMT RACEWAY TO ABOVE THE HUNG OR ACCESSIBLE CEILING. RACEWAY TO TERMINATE ABOVE PARTITION WITH A 90° SWEEP AND INSULATED BUSHING.

FIRE ALARM SYSTEM

FA — CONNECT TO FIRE ALARM CONTROL PANEL

H — FIRE ALARM SYSTEM HEAT DETECTOR (135°F RATE OF RISE)

H F — FIRE ALARM SYSTEM HEAT DETECTOR. "F" INDICATES FIXED TEMPERATURE 190°F.

S — FIRE ALARM SMOKE DETECTOR. "E" DENOTES ELEVATOR RECALL.

F — FIRE ALARM SYSTEM MANUAL PULL STATION

F 15 — ADA COMPLIANT FIRE ALARM AUDIO/VISUAL ALARM DEVICE. NUMERAL SHOWN DENOTES CANDELA RATING.

F — FIRE ALARM SYSTEM EXTERIOR MOUNTED WEATHERPROOF RED ROTATING LOCATOR BEACON

CO — CARBON MONOXIDE DETECTOR

M — FIRE ALARM MASTER BOX

FACP — FIRE ALARM CONTROL PANEL

TS — FIRE PROTECTION TAMPER SWITCH. FURNISHED BY FIRE PROTECTION MANUFACTURER, WIRED BY E.C.

FS — FIRE PROTECTION WATER FLOW SWITCH. FURNISHED BY FIRE PROTECTION MANUFACTURER, WIRED BY E.C.

PS — FIRE PROTECTION WATER PRESSURE SWITCH FURNISHED BY FIRE PROTECTION CONTRACTOR WIRED BY ELECTRICAL CONTRACTOR

RECEPTACLES

(MOUNT 18" AFF TO CENTER LINE UNLESS NOTED OTHERWISE)

DUPLEX CONVENIENCE OUTLET RATED 20A, 125V, U-SLOT GROUNDED TYPE MOUNTED 18" ABOVE FINISHED FLOOR TO CENTER LINE. ALL OTHER MOUNTING HEIGHTS SHALL BE AS NOTED ADJACENT TO THE SYMBOL. REFER TO RECEPTACLE ABBREVIATIONS FOR SPECIAL PURPOSE RECEPTACLES.

DOUBLE DUPLEX CONVENIENCE OUTLET RATED 20A, 125V, U-SLOT GROUNDED TYPE MOUNTED 18" ABOVE FINISHED FLOOR TO CENTER LINE. ALL OTHER MOUNTING HEIGHTS SHALL BE AS NOTED ADJACENT TO THE SYMBOL. REFER TO RECEPTACLE ABBREVIATIONS FOR SPECIAL PURPOSE RECEPTACLES.

DUPLEX CONVENIENCE OUTLET MOUNTED ABOVE COUNTER OR BENCHTOP - 20A, 125V, U-SLOT GROUNDED TYPE MOUNTED 6" ABOVE COUNTERTOP OR BENCHTOP. ALL OTHER MOUNTING HEIGHTS SHALL BE AS NOTED ON THE DRAWINGS. REFER TO RECEPTACLE ABBREVIATIONS FOR SPECIAL PURPOSE RECEPTACLES.

SINGLE 20A, 250V, 1-PHASE, 3-WIRE CONVENIENCE OUTLET. MOUNTED 18" ABOVE FINISHED FLOOR TO CENTERLINE. ALL OTHER MOUNTING HEIGHTS SHALL BE AS NOTED ADJACENT TO SYMBOL.

R — RANGE RECEPTACLE, 50 AMP, 125/250 VOLT GROUNDING TYPE. MOUNTING HEIGHT 18" A.F.F. OR AS INDICATED.

D — DRYER RECEPTACLE, 30 AMP, 125/250 VOLT GROUNDING TYPE. MOUNTING HEIGHT 18" A.F.F. OR AS INDICATED.

ONE-LINE POWER DIAGRAM SYMBOLS

GROUND - SYSTEM AND/OR EQUIPMENT

3 PHASE, 3 WIRE DELTA CONNECTION

3 PHASE, 3 WIRE WYE CONNECTION (UNGROUNDED)

3 PHASE, 4 WIRE WYE CONNECTION (GROUNDED NEUTRAL)

CIRCUIT BREAKER

-A — LIGHTNING ARRESTOR AND GROUNDING

POTENTIAL TRANSFORMERS

C — CURRENT TRANSFORMERS

MISCELLANEOUS

PB — PULL BOX

N E L — AUTOMATIC TRANSFER SWITCH

G KW — EMERGENCY GENERATOR

POWER DISTRIBUTION EQUIPMENT

PANELBOARD-SURFACE MOUNTED

T — DRY TYPE TRANSFORMER

GB — GROUND BUS WALL MOUNTED CHATSWORTH MODEL NO. 10622-020 EXTEND A 1/2"C, 1-#6 INSULATED GROUND TO THE BUILDING GROUND SYSTEM

SAFETY SWITCH - RATING AND TYPE AS NOTED ON THE DRAWING.

30A/20A — FUSIBLE SAFETY SWITCH - RATING AND TYPE AS NOTED ON THE DRAWING. (30 AMP, 20 AMP FUSE, 3 POLE)

MAGNETIC STARTER OR CONTACTOR - RATING AND SIZE AS NOTED ON THE DRAWING.

1 — MOTOR, NUMERAL DENOTES HORSE POWER

T — WALL MOUNTED LINE VOLTAGE THERMOSTAT MOUNTED 54"AFF. THERMOSTAT FURNISHED BY HVAC AND INSTALLED BY ELECTRICAL CONTRACTOR.

EWH — ELECTRIC WATER HEATER

PB — PULL BOX

PS — PRESSURE SWITCH

FS — FLOAT SWITCH

CP — PACKAGE CONTROL PANEL FOR EQUIPMENT

D — MOTORIZED DAMPER

SV — SOLENOID VALVE

VFD — VARIABLE SPEED DRIVE

C — MAGNETIC CONTACTOR

V — MOTORIZED VALVE

G — GENERATOR

ATS — AUTOMATIC TRANSFER SWITCH

GENERAL NOTES

1. DRAWINGS ARE DIAGRAMMATIC ONLY. THE EXACT LOCATION, MOUNTING HEIGHTS, SIZE OF EQUIPMENT AND ROUTING OF RACEWAYS SHAL`L BE COORDINATED AND DETERMINED IN THE FIELD.
2. THE EXACT LOCATION AND MOUNTING HEIGHTS OF ALL LIGHTING FIXTURES LOCATED IN MECHANICAL/ELECTRICAL EQUIPMENT SPACES SHALL BE COORDINATED IN THE FIELD BY THE ELECTRICAL CONTRACTOR BEFORE INSTALLATION OF SAME, SO AS TO AVOID INTERFERENCE WITH DUCTS, PIPING AND OTHER MECHANICAL/ELECTRICAL EQUIPMENT.
3. REFLECTED CEILING PLANS FOR ANY AND ALL AREAS PREPARED BY THE ARCHITECT SHOWING THE LOCATION OF LIGHTING FIXTURES SHALL TAKE PRECEDENCE OVER THE LOCATIONS OF SAME SHOWN ON THE LIGHTING DRAWINGS. THE ELECTRICAL CONTRACTOR SHALL INSTALL THE LIGHTING FIXTURES IN ANY GIVEN AREA TO AGREE WITH THE ARCHITECT'S REFLECTED CEILING PLANS.
4. ALL STRAIGHT FEEDER, BRANCH CIRCUIT AND AUXILIARY SYSTEM CONDUIT RUNS SHALL BE PROVIDED WITH SUFFICIENT PULL BOXES TO LIMIT THE MAXIMUM LENGTH OF ANY SINGLE CABLE PULL TO 150 FEET. EXACT SIZES OF PULL BOXES AND LOCATIONS TO BE DETERMINED IN THE FIELD BY THE ELECTRICAL CONTRACTOR.
5. FURNISH ALL REQUIRED ACCESS PANELS AS REQUIRED TO SUIT FIELD CONDITIONS FOR THE PROPER OPERATION AND MAINTENANCE OF THE ELECTRICAL SYSTEM. THE EXACT SIZES AND PHYSICAL LOCATIONS SHALL BE TO SUIT ACCESSIBILITY AND CONSTRUCTION CONDITIONS. ALL ACCESS PANELS PROVIDED BY THE ELECTRICAL CONTRACTOR SHALL MATCH EXACTLY THE ACCESS PANELS FURNISHED AND INSTALLED BY THE GENERAL CONTRACTOR. THE ACCESS PANELS WILL BE INSTALLED BY THE TRADE CONTRACTOR UNDER THE APPROPRIATE SECTION OF THE SPECIFICATIONS FOR THE SURFACE IN WHICH THE PANELS ARE LOCATED.
6. THE ELECTRICAL CONTRACTOR SHALL COORDINATE WITH THE HVAC, FIRE PROTECTION, PLUMBING, ELECTRICAL AND KITCHEN EQUIPMENT CONTRACTORS AS APPLICABLE AS TO THE EXACT LOCATION OF THEIR RESPECTIVE EQUIPMENT; THE POWER WIRING, CONTROL WIRING AND ALL ELECTRICAL CONNECTIONS AND CONDUIT TURN-UPS SHALL BE COORDINATED WITH THE RESPECTIVE CONTRACTORS BEFORE THE START OF CONSTRUCTION IN THE FIELD.
7. SLEEVES ARE TO BE UTILIZED FOR PASSAGE OF CONDUITS THROUGH FLOORS OR WALLS. CONDUITS AND BOXES ARE TO BE SUPPORTED BY THE USE OF PRESET FASTENERS INSTALLED IN FLOORS, WALLS OR COLUMNS. CONDUITS AND BOXES ARE TO BE INSTALLED CONCEALED IN MASONRY WALLS AND ABOVE HUNG CEILINGS. ALL SLEEVES ARE TO BE SEALED WITH APPROVED FIRE STOPPING SEALANT.
8. ALL LIGHTING FIXTURES, ELECTRICAL DEVICES, CABLES AND RACEWAYS ARE TO BE INDEPENDENTLY SUPPORTED OF THE CEILING SYSTEM. FIXTURES ARE TO BE SUPPORTED FROM THE STRUCTURE BY THE USE OF JACK CHAIN, THREADED ROD OR OTHER MEANS APPROVED BY THE ENGINEER. CEILING SYSTEM TIE WIRES AND GRID ARE NOT TO BE UTILIZED FOR THE SUPPORT OF ELECTRICAL DEVICES, CABLES AND RACEWAYS. APPROVED SUPPORTS, HANGERS, CLIPS, ETC. ARE TO BE UTILIZED.
9. THE LOCATION AND MOUNTING HEIGHTS OF ALL POWER, LIGHTING, COMMUNICATIONS AND AUXILIARY SYSTEM DEVICES SHOWN ON THE ARCHITECTURAL DRAWINGS SHALL TAKE PRECEDENCE OVER THE LOCATIONS SHOWN ON THE ELECTRICAL DRAWINGS. THE ELECTRICAL CONTRACTOR SHALL INSTALL ALL POWER, LIGHTING, COMMUNICATIONS AND AUXILIARY SYSTEM DEVICES TO AGREE WITH THE ARCHITECTURAL DRAWINGS.
10. COMBINED HOMERUNS OF TWO (2) OR THREE (3) CIRCUITS MAY BE UTILIZED. HOWEVER, THE NEUTRAL CONDUCTOR IS TO BE INCREASED TO #10AWG. COMBINED HOMERUNS ARE TO BE LIMITED TO 20A, LIGHTING AND POWER CIRCUITS.
11. INSTALLATION OF BACK TO BACK DEVICES ARE TO BE AVOIDED. ALLOW ONE WALL FRAMING MEMBER BETWEEN EACH BACK TO BACK DEVICE AS A MINIMUM.
12. WORK SHALL CONFORM TO THE MASSACHUSETTS ELECTRICAL CODE, MASSACHUSETTS BUILDING CODE, NFPA AND REQUIREMENTS OF LOCAL AUTHORITIES HAVING JURISDICTION.
13. THE WORD "CONTRACTOR" AS USED IN THE "ELECTRICAL WORK" SHALL MEAN THE ELECTRICAL SUBCONTRACTOR.
14. CONTRACTOR SHALL PAY FOR ALL PERMITS, INSURANCE AND TESTS, AND SHALL PROVIDE LABOR AND MATERIAL TO COMPLETE THE ELECTRICAL WORK SHOWN.
15. CONTRACTOR SHALL PAY ELECTRIC UTILITY COMPANY BACKCHARGES AND PROVIDED COORDINATION WITH SAME.
16. EXCEPT AS OTHERWISE NOTED, THE ELECTRICAL WORK SHALL INCLUDE DEMOLITION, PANELBOARDS, CIRCUIT BREAKERS, FEEDERS, WIRING, RACEWAYS, LIGHTING FIXTURES, DEVICES, TELEPHONE AND DATA OUTLETS, SAFETY SWITCHES, FIRE ALARM AND NURSE CALL SYSTEMS, TRANSFORMERS AND CONNECTION NECESSARY TO OPERATE MOTORS AND OTHER EQUIPMENT.
17. AUTOMATIC TEMPERATURE CONTROLS SHALL BE PROVIDED AND INSTALLED BY THE MECHANICAL SUBCONTRACTOR. STARTERS AND OTHER CONTROL DEVICES FOR EQUIPMENT SHALL BE PROVIDED BY THE MECHANICAL SUBCONTRACTOR FOR INSTALLATION AND CONNECTION BY THIS CONTRACTOR.
18. THE CONTRACTOR SHALL PROVIDE ALL TEMPORARY LIGHTING AND POWER AND PAY ALL ENERGY CHARGES.
19. DURING CONSTRUCTION, THE ELECTRICAL CONTRACTOR SHALL KEEP HIS PORTION OF THE WORK NEAT, CLEAN AND ORDERLY.
20. ALL SYSTEMS SHALL BE TESTED FOR SHORT CIRCUIT AND GROUNDS PRIOR TO ENERGIZING AND ANY DEFECTS SHALL BE CORRECTED.
21. ALL CUTTING AND PATCHING REQUIRED FOR ELECTRICAL WORK SHALL BE INCLUDED AS PART OF THIS SECTION.
22. COMPLETE SHOP DRAWINGS SHALL BE SUBMITTED FOR ELECTRICAL EQUIPMENT. WHERE SPECIFIED, ELECTRICAL EQUIPMENT IS SUBSTITUTED. THE ELECTRICAL CONTRACTOR SHALL SUBMIT COMPLETE SPECIFICATIONS ON THE SUBSTITUTE AS WELL AS THE ITEM ORIGINALLY SPECIFIED.
23. MATERIALS SHALL BE SPECIFICATION GRADE AND UL LISTED.
24. WHERE MATERIAL IS CALLED OUT IN THE LEGEND BY MANUFACTURER, TYPE OR CATALOG NUMBER, SUCH DESIGNATIONS ARE TO ESTABLISH STANDARDS OR DESIRED QUALITY. ACCEPTANCE OR REJECTIONS OF PROPOSED SUBSTITUTIONS SHALL BE SUBJECT TO THE APPROVAL OF THE OWNER.
25. REFER TO ARCHITECTURAL DRAWINGS FOR EXACT LOCATION OF EQUIPMENT AND DEVICE PRIOR TO ROUGHING IN FOR SAME.
26. WORK SHALL BE COORDINATED WITH THAT OF OTHER TRADES TO ELIMINATE INTERFERENCES.
27. EXACT LOCATIONS OF MECHANICAL EQUIPMENT, DEVICES, ETC. SHALL BE VERIFIED WITH HEATING, VENTILATION AND AIR CONDITIONING SUBCONTRACTOR PRIOR TO ROUGHING FOR SAME.
28. ELECTRICAL CONTRACTOR SHALL OBTAIN SHOP DRAWINGS/SPECIFICATIONS OF ALL EQUIPMENT FROM THE GENERAL CONTRACTOR PRIOR TO PURCHASING AND INSTALLING ELECTRICAL EQUIPMENT FOR SAME. NOTIFY ENGINEER OF ANY DISCREPANCIES BETWEEN ACTUAL EQUIPMENT INSTALLED AND CONTRACT DOCUMENTS.
29. ELECTRICAL WORK SHALL BE GUARANTEED FOR A PERIOD OF ONE YEAR FROM DATE OF WHICH SYSTEM IS PUT INTO SERVICE.
30. WORK SHALL BE GROUNDED IN ACCORDANCE WITH CODE REQUIREMENTS. COMPLETE EQUIPMENT (INSULATED GREEN WIRE) GROUNDING SYSTEM SHALL BE INSTALLED.
31. WIRE SHALL BE TYPE "THHN-THWN" INSULATED FOR 600 VOLTS, MINIMUM SIZE #12 AWG COPPER UNLESS SPECIFICALLY NOTED OTHERWISE.
32. WIRING METHODS:
    A. INTERIOR FEEDERS SHALL BE EMT CONDUIT OR MI CABLE.
    B. INTERIOR LIGHTING AND RECEPTACLE BRANCH CIRCUITS IN PARTITIONS SHALL BE MC CABLE.
    C. INTERIOR BRANCH CIRCUITS ABOVE HUNG CEILINGS SHALL BE EMT CONDUIT.
    D. INTERIOR BRANCH CIRCUITS FOR HVAC, PLUMBING AND FIRE PROTECTION EQUIPMENT SHALL BE EMT AND/OR MC CABLE.
    E. LIGHTING FIXTURE CONNECTIONS SHALL BE MC CABLE.
    F. EMERGENCY, CRITICAL AND LIFE/SAFETY BRANCH LIGHTING CIRCUITRY SHALL BE EMT CONDUIT.
    G. EQUIPMENT CONNECTIONS SHALL BE LIQUID TIGHT FLEXIBLE METAL CONDUIT.
    H. FIRE ALARM SYSTEM WIRING SHALL BE EMT.
    I. TELEPHONE AND DATA SHALL BE EMPTY EMT W/PULL WIRE.

    RACEWAYS SHALL BE RUN CONCEALED IN FINISHED AREAS. IN UNFINISHED AREAS, RACEWAYS MAY BE RUN EXPOSED. CONNECTORS FOR RIGID CONDUIT SHALL BE MADE WITH THREADED COUPLINGS. CONNECTORS FOR ELECTRIC METALLIC TUBING AND FLEXIBLE LIQUID TIGHT CONDUIT SHALL BE COMPRESSION TYPE WITH INSULATED THROATS. CONDUIT AND TUBING SHALL BE SUPPORTED ON GALVANIZED WALL BRACKETS. TRAPEZE HANGERS OR PIPE STRAPS SECURED BY MEANS OF TOGGLE BOLTS OR INSERTS IN WOOD CONSTRUCTION. FEEDERS SHALL BE ROUTED TIGHT TO THE UNDERSIDE OF THE BUILDING STRUCTURE. CONDUIT SHALL BE INSTALLED PARALLEL AND PERPENDICULAR TO MAIN BUILDING SUPPORTS.
33. BOXES SHALL BE GALVANIZED STEEL AND SHALL BE SIZED TO ACCOMMODATE THE EQUIPMENT OR APPARATUS TO BE INSTALLED. WHERE BOXES OF A STANDARD MAKE ARE NOT AVAILABLE, SPECIAL BOXES SHALL BE MANUFACTURED. FIXTURES SUPPORTED ON THE CEILING OR ON THE WALL SHALL HAVE SUITABLE FIXTURE SUPPORT FOR THE SPECIFIC FIXTURE.
34. PANELBOARDS SHALL BE DEAD FRONT, THERMAL MAGNETIC BOLT-ON CIRCUIT BREAKER TYPE, DESIGNED FOR SURFACE OR FLUSH MOUNTING AS INDICATED ON PLAN, AND HAVING CONNECTIONS TO 120/208 OR 277/480 VOLT, 3 PHASE, 4 WIRE SERVICE. ALL BUS BARS SHALL BE COPPER. CABINETS SHALL BE MADE OF CODE GAUGE GALVANIZED SHEET STEEL, WITH A MINIMUM OF 4 INCH GUTTERS, DOOR IN DOOR CONSTRUCTION, LOCKED DOOR, AND FLUSH HINGES. TYPEWRITTEN INDEX SHALL BE MOUNTED ON DOOR INSIDE TRANSPARENT COVER INDICATING LOAD SERVED. PANELS SHALL INCLUDE SEPARATE EQUIPMENT GROUND BUS.
35. PANELBOARDS, DISCONNECT SWITCHES, AND CONTROLLERS SHALL HAVE NAMEPLATES OF BLACK LAMINATED PLASTIC WITH ENGRAVED WHITE LETTERS, SECURED WITH SELF-TAPPING SCREWS.
36. CONNECTIONS AT MOTORS SHALL BE MADE WITH 18" LENGTH OF 1/2 INCH FLEXIBLE LIQUID TIGHT CONDUIT.
37. CONTRACTOR SHALL PHASE BALANCE PANELBOARDS IN THE FIELD. LOAD ON EACH PHASE SHALL BE BALANCED WITHIN 10% OF EACH OTHER.
38. WALL PLATES SHALL BE PROVIDED FOR EACH SWITCH, RECEPTACLE, DATA AND TELEPHONE OUTLET. PROVIDE WALL PLATES WITH STAINLESS STEEL FINISH FOR ALL DEVICES IN FINISHED AREAS. FOR DEVICES IN UNFINISHED AREAS, PROVIDE CAST IRON OR ALLOY OF SUITABLE TYPE TO MATCH OUTLET BOXES SPECIFIED.
39. TOGGLE SWITCHES SHALL BE OF THE SINGLE POLE A.C. QUIET TOGGLE TYPE FOR MOUNTING IN A SINGLE-GANG SPACING. TOGGLE SWITCHES SHALL BE FULLY RATED 20 AMPERES AT 120/277 VOLT.
40. DUPLEX WALL RECEPTACLES SHALL BE 2 POLE, 3 WIRE, GROUNDING TYPE 20 AMPERE, 125 VOLT WITH METAL PLASTER EARS. RECEPTACLES SHALL BE NEMA STANDARD CONFIGURATION 5-20R.
41. FUSED OR UNFUSED SAFETY SWITCHES SHALL BE TOTALLY ENCLOSED, HEAVY DUTY TYPE. SWITCHES SHALL HAVE VOLTAGE, HORSEPOWER AND AMPERE RATING SUITABLE FOR THE APPLICATION. PROVIDE NUMBER OF POLES AS REQUIRED. SWITCHES LOCATED EXTERIOR TO THE BUILDING OR IN DAMP/WET LOCATIONS SHALL BE IN A NEMA 3R ENCLOSURE.
42. FUSES SHALL BE DUAL ELEMENT, TIME DELAY TYPE, AS MANUFACURED BY BUSSMAN, RELIANCE OR APPROVED EQUAL.
43. FURNISH AND INSTALL SLEEVES IN FLOORS, BEAMS, WALLS, ETC. REQUIRED FOR INSTALLING THIS WORK.
44. CONDUIT PASSING THROUGH FIRE RATED WALLS AND FLOORS SHALL BE PROVIDED WITH ALL NECESSARY MATERIALS TO ENSURE THAT THE FIRE RATED INTEGRITY IS MAINTAINED.
45. LIGHTING FIXTURES SHALL BE INDIVIDUALLY SUPPORTED FROM THE STRUCTURAL SLAB OR STRUCTURAL BUILDING MEMBER. FIXTURES WILL NOT BE PERMITTED TO BE SUPPORTED FROM SUSPENDED CEILING OR ROOF DECK.
46. FEEDER TAPS WILL NOT BE ALLOWED IN PANELBOARD GUTTERS.
47. CONDUIT RUNS AS SHOWN ON THE PLANS ARE DIAGRAMMATIC ONLY; EXACT LOCATION AND METHOD OF SUPPORT SHALL BE DETERMINED IN THE FIELD.
48. CONTRACTOR SHALL CHECK EXISTING CONDITIONS TO DETERMINE EXACT EXTENT OF WORK TO BE PERFORMED PRIOR TO BIDDING. DIMENSIONS RELEVANT TO EXISTING WORK SHALL BE VERIFIED IN THE FIELD.
49. IN AREAS NOT AFFECTED BY THIS RENOVATION, THIS SUBCONTRACTOR SHALL MAINTAIN CONTINUITY OF ELECTRIC SERVICE.
50. WHERE CONNECTIONS ARE MADE IN EXISTING PANELS, THE PANEL INDEX SHALL BE REVISED TO INDICATE THE NEW LOADS SERVED. NEW CIRCUIT BREAKERS ADDED TO EXISTING PANELS SHALL BE THE SAME FRAME SIZE, VOLTAGE RATING AND INTERRUPTING CAPACITY AS EXISTING PANEL AND CIRCUIT BREAKERS.
51. THE CONTRACTOR SHALL PROVIDE ALL REQUIRED POWER SUPPLIES, APPURTENANCES, FINAL CONNECTIONS, TESTING AND WORK REQUIRED FOR ADDITIONS TO THE EXISTING FIRE ALARM SYSTEM. PAY ALL COSTS ARISING THERE FROM, FOR A COMPLETE AND OPERATIONAL SYSTEM.
52. ELECTRICAL SHUTDOWN SHALL BE AT A TIME AND DATE APPROVED BY THE OWNER.
53. PROVIDE AS-BUILT "CADD" DRAWINGS AT THE COMPLETION OF THE PROJECT.

CONSTRUCTION DOCUMENTS
12/11/15

COPYRIGHT 2015 WESTON & SAMPSON

Weston&Sampson®
273 Dividend Road, Rocky Hill, CT 06067
(860) 513-1473 (800) SAMPSON
www.westonandsampson.com

No.	Date	Dr.By	Ck.By	App.By	Description

A P P R O V E D

REGISTERED PROFESSIONAL ENGINEER

DECEMBER 18, 2015
DATE

STATE OF CONNECTICUT ★ LICENSED PROFESSIONAL ENGINEER ★ ROBERT F. McALEER No. 22067

TOWN OF GREENWICH – DEPARTMENT OF PUBLIC WORKS
RITCH AVENUE WEST, GREENWICH, CONNECTICUT

BYRAM PARK POOL REPLACEMENT

ELECTRICAL LEGEND

CADD NO.	SCALE:	CONTRACT:	JOB NO.	DR.BY	DSN.BY	CHK.BY	APP.BY
–	NONE		2130336	DNM	DNM	RFM	RFM

FILE NO. –

E1.00

SHEET – OF

Z:\CT-RockyHill-Projects\Greenwich CT\Greenwich Parks and Recreation\Byram Park\CAD\MEP\Electrical\E1.00 Electrical Legend.dwg

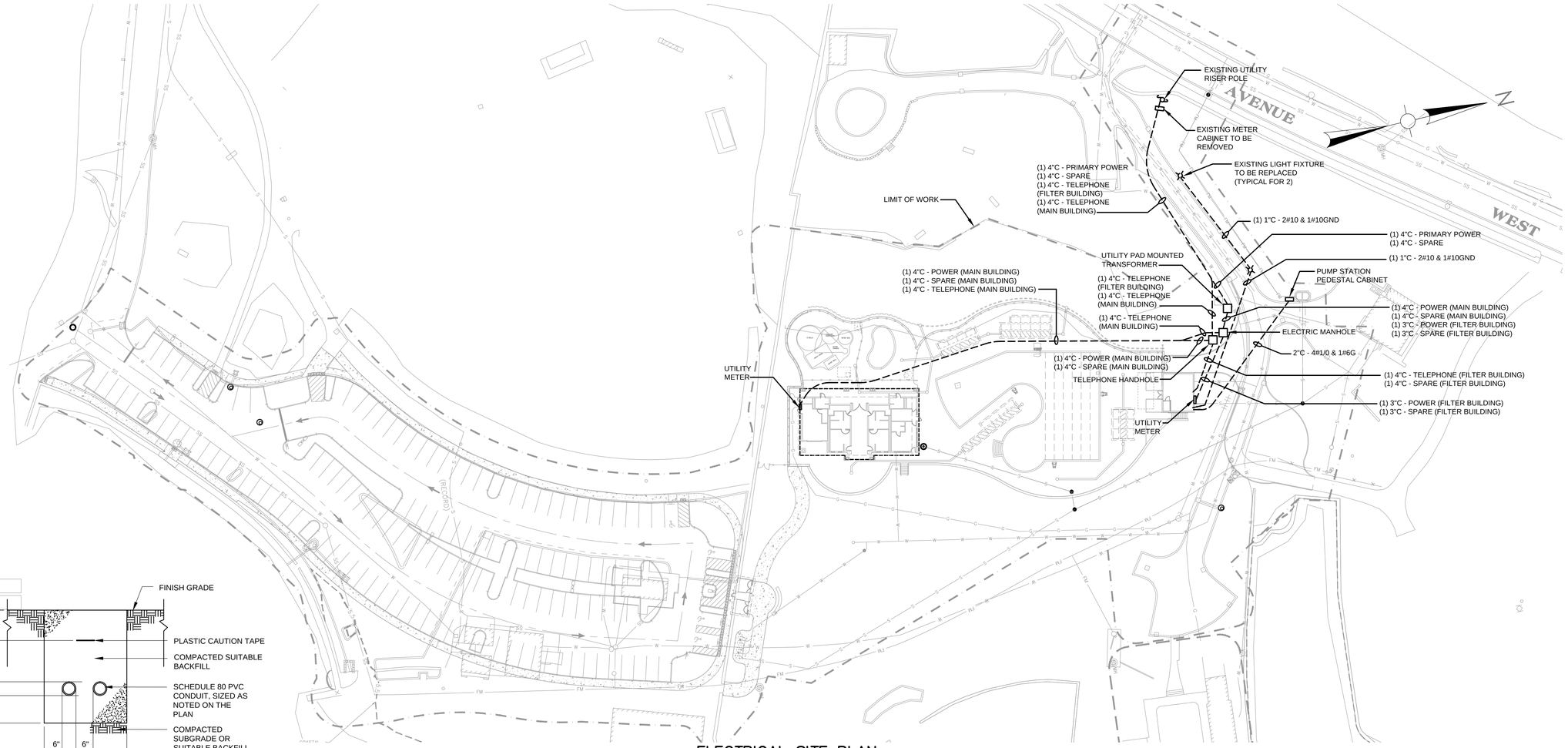

ELECTRICAL SITE PLAN

SCALE: 1"=40'

0 40' 80' 120'

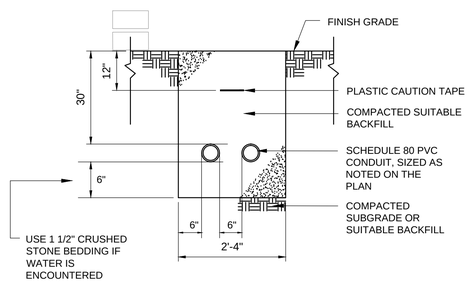

TYPICAL DIRECT BURIED CONDUIT DETAIL

NOT TO SCALE

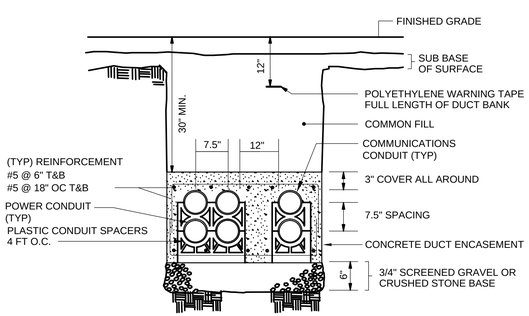

TYPICAL CONCRETE ENCASED DUCTBANK DETAIL

NOT TO SCALE

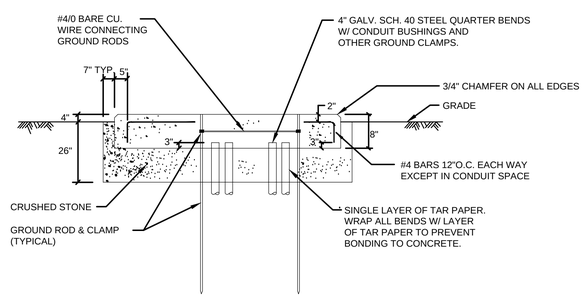

NOTE:
PRIMARY AND SECONDARY CONDUITS SHALL BE 4" RIGID GALVANIZED STEEL.

SECTION "A-A"
NOT TO SCALE

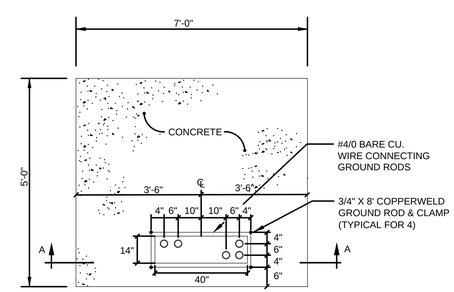

PLAN
NOT TO SCALE

NOTE:
CONTRACTOR SHALL COORDINATE ALL TRANSFORMER PAD DIMENSIONS AND REQUIREMENTS WITH ELECTRIC UTILITY PRIOR TO INSTALLATION.

TYPICAL TRANSFORMER PAD DETAIL

NOT TO SCALE

CONSTRUCTION DOCUMENTS
12/11/15

COPYRIGHT 2015 WESTON & SAMPSON

Z:\CT-Rockyhill-Projects\Greenwich CT\Greenwich Parks and Recreation\Byram Park\CAD\MEP\Electrical\E2.01 Electrical Site Plan.dwg

Weston&Sampson®
273 Dividend Road, Rocky Hill, CT 06067
(860) 513-1473 (800) SAMPSON
www.westonandsampson.com

No.	Date	Dr.By	Ck.By	App.By	Description
		A	P	R	O V E D

DECEMBER 18, 2015
DATE

REGISTERED PROFESSIONAL ENGINEER

STATE OF CONNECTICUT ROBERT F. McKEEFER No. 22067 LICENSED PROFESSIONAL ENGINEER

TOWN OF GREENWICH – DEPARTMENT OF PUBLIC WORKS
RITCH AVENUE WEST, GREENWICH, CONNECTICUT
BYRAM PARK POOL REPLACEMENT

ELECTRICAL SITE PLAN

CADD NO.	SCALE: 1"=40'	CONTRACT:	JOB NO. 2130336	DR.BY	DSN.BY DNM	CHK.BY RFM	APP.BY RFM

FILE NO.

E2.01

SHEET – OF

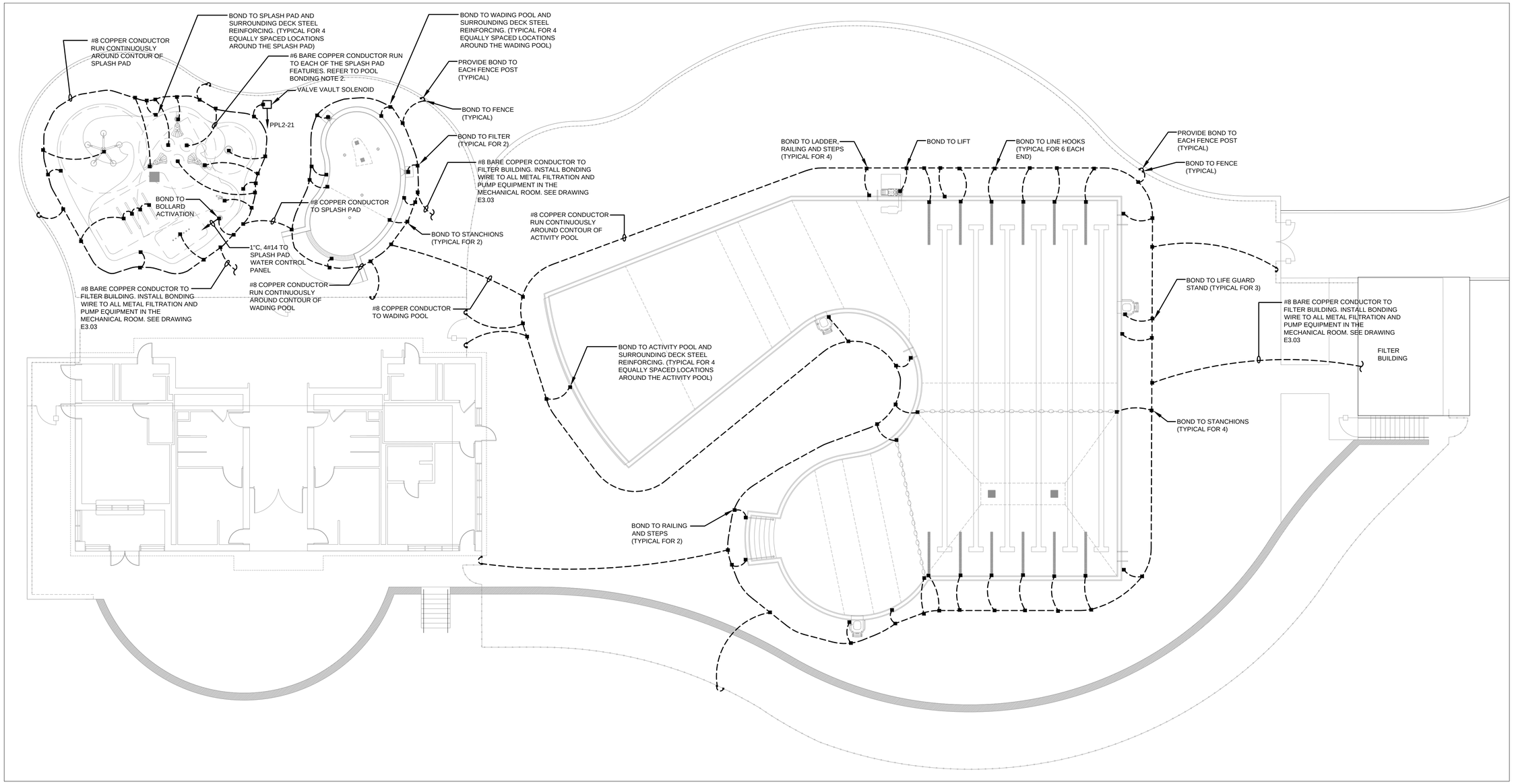

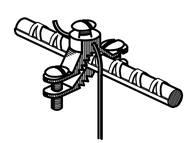

BONDING DETAIL

SCALE: NTS

EQUIPOTENTIAL BONDING GRID

REFER TO NEC ARTICLE 680.26

EQUIPOTENTIAL BONDING GRID TO RUN CONTINUOSULY AROUND THE CONTOUR OF POOL EXTENDING 18" TO 24" FROM THE INSIDE WALLS OF THE POOL. THE 4"-6" BELOW GRADE GRID PATTERN SHALL BE SECURED WITHIN OR UNDER THE POOL DECK MEDIA. THE GRID SHALL BE CONSTRUCTED OF MINIMUM #8 AWG BARE SOLID COPPER CONDUCTORS.

EQUIPOTENTIAL BONDING CONDUCTOR SHALL COMPLY WITH FBC 2007 ALTERNATIVE AND EQUIVALENT METHOD TO NEC 2015 ARTICLE 680.26.

POOL BONDING NOTES:

1. ALL METALLIC PARTS OF THE POOL STRUCTURE, INCLUDING THE REINFORCING METAL OF THE POOL SHELL, POOL REBAR, DRAINS, FOUNTAINS, METALLIC RECESSED LADDER RECEIVERS, PERIMETER GUTTER DRAIN, AND ALL OTHER METALLIC COMPONENTS AS REQUIRED BY CODE SHALL BE BONDED PER THE REQUIREMENTS OF THE CURRENT ELECTRICAL CODE.
2. SOLID COPPER BONDING CONDUCTORS SHALL NOT BE SMALLER THAN NO. 8 AWG.
3. FURNISH AND INSTALL ANY REQUIRED GROUNDING RODS.
4. PROVIDE AND INSTALL BONDING CONDUCTORS THROUGHOUT THE BONDING SYSTEM WITH CONNECTION TO EACH ITEM OF THE POOL EQUIPMENT: LADDERS, LIFEGUARD CHAIRS, ETC.
5. BONDING CONDUCTORS SHALL BE CONTINUOUS.
6. INSULATE ANY SPLICES WITH APPROVED INSULATION KIT AND MAKE WATER TIGHT TO PROTECT FROM CORROSION AND MAINTAIN THE INTEGRITY OF THE SPLICE.
7. PROVIDE RED MARKING TAPE BURIED 6" TO 10" BELOW SURFACE INDICATING ANY BURIED BOND WIRES BELOW THAT EXTEND BEYOND THE PERIMETER OF THE POOL DECK.
8. COORDINATE INSTALLATION OF POOL GROUNDING/BONDING AT THE BEGINNING OF THE PROJECT. ELECTRICIAN MUST BE PRESENT TO PERFORM HIS WORK BEFORE THE CONCRETE IS APPLIED.
9. COORDINATE FOR CONNECTION OF ALL POOL REBAR, REINFORCING STEEL, AND EQUIPMENT BONDS BEFORE CONCRETE IS POURED.

CONSTRUCTION DOCUMENTS
12/11/15

COPYRIGHT 2015 WESTON & SAMPSON

Z:\CT-Rockyhill-Projects\Greenwich CT\Greenwich Parks and Recreation\Byram Park\CAD\MEP\Electrical\E2.02 Electrical Pool Bonding Plan.dwg

Weston&Sampson®
273 Dividend Road, Rocky Hill, CT 06067
(860) 513-1473 (800) SAMPSON
www.westonandsampson.com

No.	Date	Dr.By	Ck.By	App.By	Description
		A P	P R	O V	E D

DECEMBER 18, 2015
DATE

REGISTERED PROFESSIONAL ENGINEER

STATE OF CONNECTICUT ROBERT F. McKEEFER No. 22697 LICENSED PROFESSIONAL ENGINEER

TOWN OF GREENWICH – DEPARTMENT OF PUBLIC WORKS
RITCH AVENUE WEST, GREENWICH, CONNECTICUT

BYRAM PARK POOL REPLACEMENT

ELECTRICAL POOL BONDING PLAN

CADD NO.	SCALE:	CONTRACT:	JOB NO.	DR.BY	DSN.BY	CHK.BY	APP.BY
	1"=10'-0"		2130336	DNM	DNM	RFM	RFM

E2.02

FILE NO.

SHEET OF

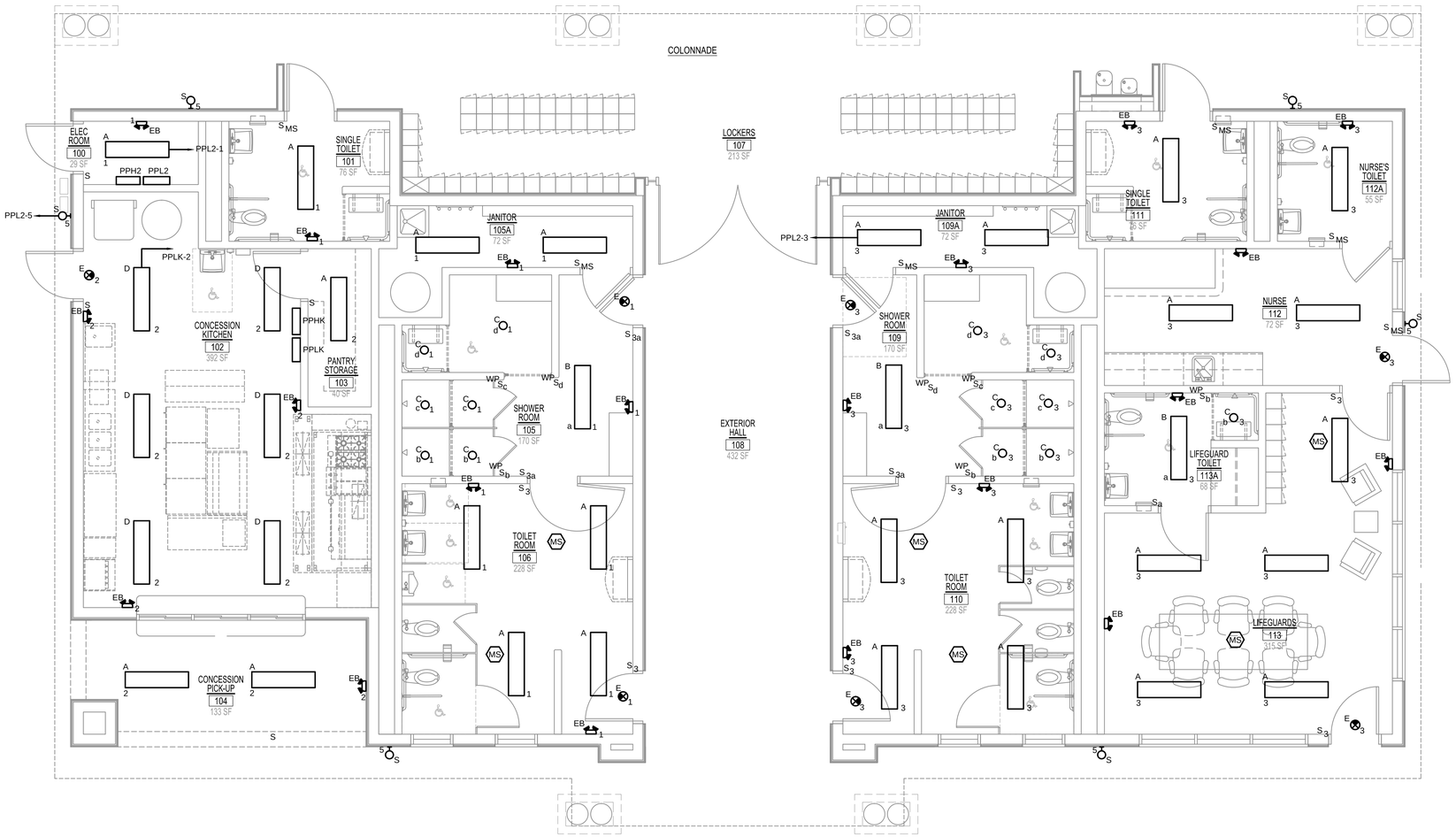

MAIN BUILDING LIGHTING PLAN

SCALE: 1/4" = 1'-0"

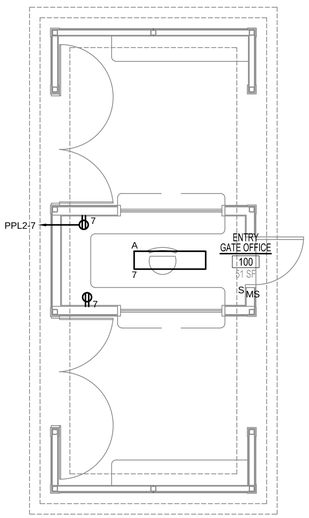

ENTRY GATE LIGHTING PLAN

SCALE: 1/4" = 1'-0"

GENERAL LIGHTING NOTES

1. MOUNTING HEIGHTS OF ALL WALL MOUNTED AND PENDANT MOUNTED LIGHTING FIXTURES SHALL BE DETERMINED BY ARCHITECT. REFER TO ARCHITECTURAL SECTIONS AND ELEVATIONS.
2. REFER TO ARCHITECTURAL REFLECTED CEILING PLANS FOR EXACT LOCATION OF ALL LIGHTING FIXTURES.
3. ALL LED LAMPS SHALL BE 3500°K UNLESS SPECIFIED OTHERWISE.
4. VERIFY EXACT CEILING TYPES PRIOR TO PURCHASING RECESSED FIXTURES.
5. THE ELECTRICAL CONTRACTOR SHALL FURNISH ALL LIGHTING FIXTURES COMPLETE WITH MOUNTING ACCESSORIES TO MEET JOB REQUIREMENTS.
6. THE ELECTRICAL CONTRACTOR SHALL VERIFY FIXTURE MOUNTING AND LOCATION AGAINST PLANS, ELEVATIONS AND DETAIL DRAWINGS. EXACT LOCATION OF ALL FIXTURES SHALL BE CONFIRMED WITH THE ARCHITECT PRIOR TO ROUGHING IN.
7. ALL FIXTURES SHALL BE SUPPORTED FROM THE BUILDING STRUCTURE, INDEPENDENT OF HUNG CEILINGS.

CONSTRUCTION DOCUMENTS
12/11/15

COPYRIGHT 2015 WESTON & SAMPSON

Weston&Sampson®
273 Dividend Road, Rocky Hill, CT 06067
(860) 513-1473 (800) SAMPSON
www.westonandsampson.com

No.	Date	Dr.By	Ck.By	App.By	Description
		A	P	P	R O V E D

DECEMBER 18, 2015
DATE

REGISTERED PROFESSIONAL ENGINEER

STATE OF CONNECTICUT ROBERT F. McKEEFER No. 22057 LICENSED PROFESSIONAL ENGINEER

TOWN OF GREENWICH – DEPARTMENT OF PUBLIC WORKS
RITCH AVENUE WEST, GREENWICH, CONNECTICUT

BYRAM PARK POOL REPLACEMENT

ELECTRICAL MAIN BUILDING LIGHTING PLAN

CADD NO.	SCALE:	CONTRACT:	JOB NO.	DR.BY	DSN.BY	CHK.BY	APP.BY
–	1/4"=1'-0"		2130336	DNM	DNM	RFM	RFM

E3.00

FILE NO. –

SHEET – OF

Z:\CT-Rockyhill-Projects\Greenwich CT\Greenwich Parks and Recreation\Byram Park\CAD\MEP\Electrical\E3.00 Electrical Main Building Lighting Plan.dwg

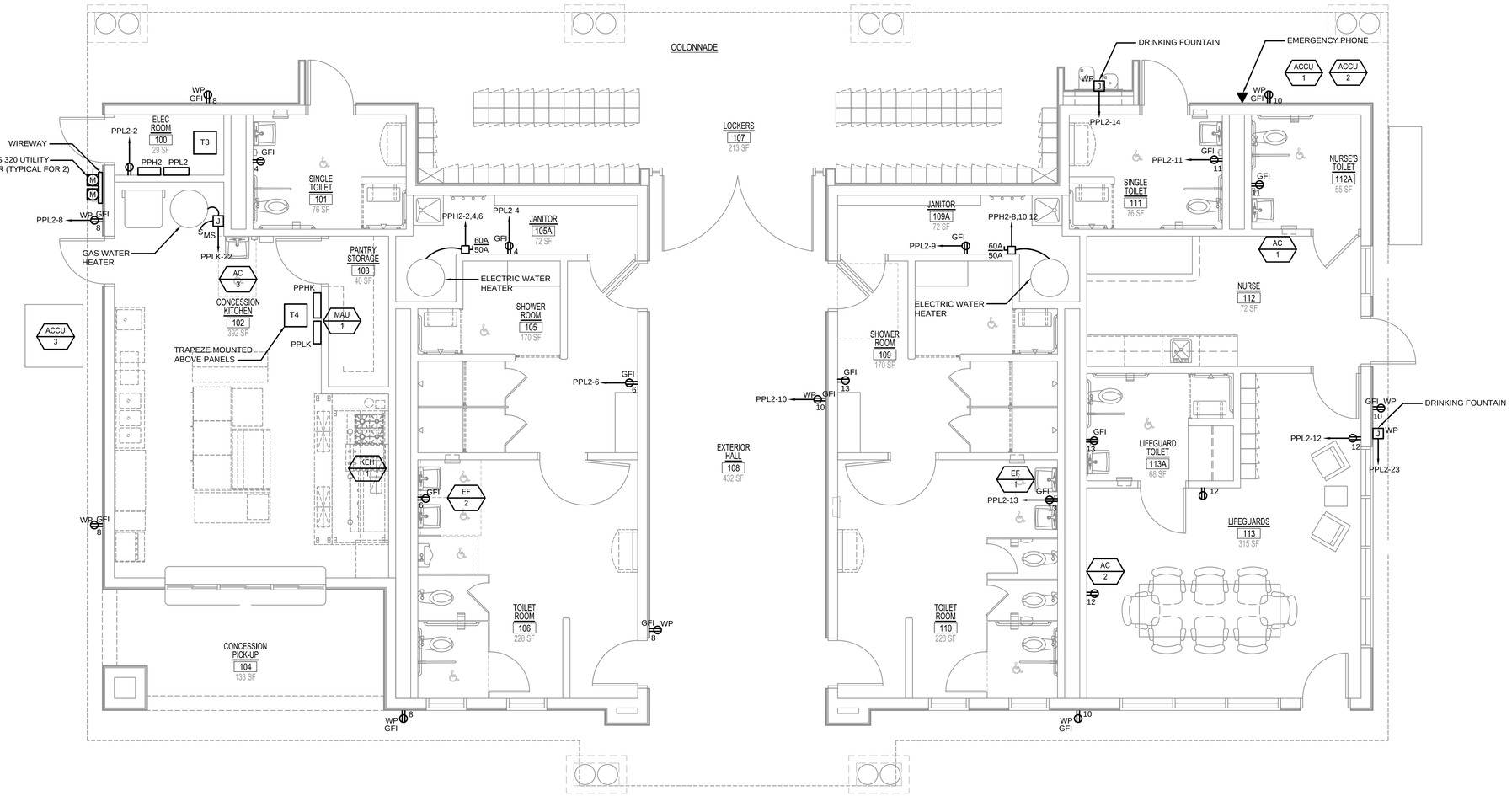

BRANCH CIRCUIT WIRING NOTES

1. WIRING IS SHOWN ON DRAWINGS ONLY FOR SPECIFIC ROUTING OR SPECIAL CONDITIONS.
2. WIRING AND CONDUIT SHALL BE REQUIRED BETWEEN ALL OUTLETS AND PANELS INDICATED WITH CIRCUIT NUMBERS AND PANEL DESIGNATIONS.
3. ALTHOUGH BRANCH CIRCUIT WIRING AND CONDUIT IS NOT SHOWN, IT IS THE INTENT OF THESE DOCUMENTS THAT A COMPLETE BRANCH CIRCUIT WIRING SYSTEM BE INSTALLED.
4. MINIMUM WIRE SIZE SHALL BE NO. 12 AWG FOR POWER AND LIGHTING CIRCUITS AND NO. 14 AWG FOR CONTROL WIRING. 120V BRANCH CIRCUITS OF MORE THAN 100 FEET AND 277V CIRCUITS OF MORE THAN 150 FEET FROM CENTER OF LOAD TO PANEL SHALL BE #10 AWG.
5. ALL SWITCH CONTROLS SHALL BE PROVIDED WITH WIRING AND CONDUIT AS REQUIRED.
6. ALL BRANCH CIRCUIT CONDUCTORS SHALL BE 98% CONDUCTIVITY, COPPER MINIMUM #12 AWG SIZE, THWN/THHN INSULATION, 600 VOLTS RATED, UNLESS OTHERWISE NOTED.

CONSTRUCTION DOCUMENTS
12/11/15

COPYRIGHT 2015 WESTON & SAMPSON

Z:\CT-Rockyhill-Projects\Greenwich CT\Greenwich Parks and Recreation\Byram Park\CAD\MEP\Electrical\E3.01 Electrical Main Building Power Plan.dwg

Weston&Sampson®
273 Dividend Road, Rocky Hill, CT 06067
(860) 513-1473 (800) SAMPSON
www.westonandsampson.com

No.	Date	Dr.By	Ck.By	App.By	Description
A	P	P	R	O	V E D

DECEMBER 18, 2015
DATE

REGISTERED PROFESSIONAL ENGINEER

ROBERT F. McKEEVER
STATE OF CONNECTICUT
No. 22057
LICENSED PROFESSIONAL ENGINEER

TOWN OF GREENWICH – DEPARTMENT OF PUBLIC WORKS
RITCH AVENUE WEST, GREENWICH, CONNECTICUT

BYRAM PARK POOL REPLACEMENT

ELECTRICAL MAIN BUILDING POWER PLAN

CADD NO.	SCALE:	CONTRACT:	JOB NO.	DR.BY	DSN.BY	CHK.BY	APP.BY
–	1/4"=1'-0"		2130336	DNM	DNM	RFM	RFM

E3.01

FILE NO. –

SHEET – OF

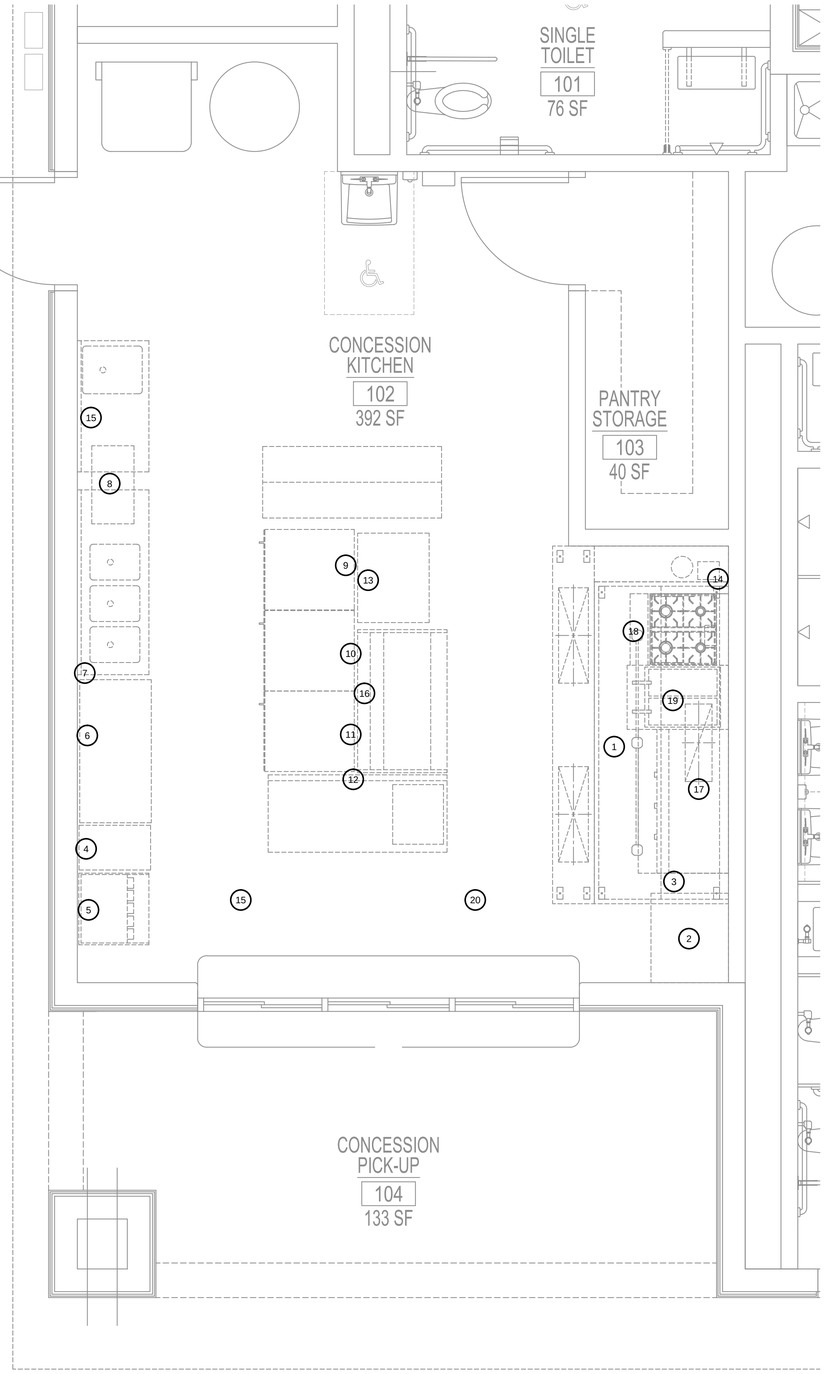

KITCHEN EQUIPMENT SCHEDULE

ITEM NO.	DESCRIPTION	LOAD	BRANCH CIRCUIT	CIRCUIT BREAKER	CONDUCTORS		CONDUIT	CONNECTIONS		
					NO.	SIZE		OUTLET	VOLTAGE	PHASE
1	CHEF TABLE	1/5 HP	PPLK-1	20A-1P	2	#12	3/4"		120	1
2	ICE CREAM FREEZER		PPLK-21							
3	GENERAL USE OUTLET		PPLK-3	20A-1P	2	#12	3/4"	NEMA 5-20R	120	1
4	ICE MACHINE	3.6 AMPS	PPLK-4	15A-1P	2	#12	3/4"		120	1
5	SODA DISPENSER		PPLK-5	20A-1P	2	#12	3/4"		120	1
6	COFFEE MAKER		PPLK-6	20A-1P	2	#12	3/4"	NEMA 5-20R	120	1
7	GENERAL USE OUTLET		PPLK-7	20A-1P	2	#12	3/4"	NEMA 5-20R	120	1
8	BIG DIPPER	4.5 AMPS	PPLK-8	20A-1P	2	#12	3/4"		120	1
9	FREEZER	1/4 HP	PPLK-9	20A-1P	2	#12	3/4"	NEMA 5-15R	120	1
10	REFRIGERATOR	7.7 AMPS	PPLK-10	20A-1P	2	#12	3/4"	NEMA 5-15R	120	1
11	REFRIGERATOR	6 AMPS	PPLK-11	20A-1P	2	#12	3/4"	NEMA 5-15R	120	1
12	GENERAL USE OUTLET		PPLK-12	20A-1P	2	#12	3/4"	NEMA 5-20R	120	1
13	GENERAL USE OUTLET		PPLK-13	20A-1P	2	#12	3/4"	NEMA 5-20R	120	1
14	FIRE SUPPRESSION SYSTEM		PPLK-14	20A-1P	2	#12	3/4"		120	1
15	GENERAL USE OUTLET		PPLK-15	20A-1P	2	#12	3/4"	NEMA 5-20R	120	1
16	SANDWICH PREP	1/3 HP	PPLK-16	20A-1P	2	#12	3/4"		120	1
17	GRIDDLE AND BROILER	1 AMP	PPLK-17	20A-1P	2	#12	3/4"	NEMA 5-15R	120	1
18	4 BURNER GAS RANGE		PPLK-18	20A-1P	2	#12	3/4"		120	1
19	GAS FRYER		PPLK-19	20A-1P	2	#12	3/4"		120	1
20	GENERAL USE OUTLET		PPLK-20	20A-1P	2	#12	3/4"	NEMA 5-20R	120	1

KITCHEN EQUIPMENT NOTES

1. ELECTRICAL CONTRACTOR IS TO PROVIDE ALL FINAL CONNECTIONS FROM JUNCTION BOXES TO CONNECTION POINT(S) LOCATED ON OR IN EQUIPMENT FURNISHED BY THE KITCHEN EQUIPMENT CONTRACTOR.
2. ELECTRICAL CONTRACTOR TO PROVIDE ALL CONDUIT, JUNCTION BOXES, ELECTRICAL OUTLETS, SWITCHES, COVER PLATES AND PULL BOXES NOT BUILT INTO EQUIPMENT OR FABRICATED FIXTURES. ALL ROUGH-INS SHALL BE CONCEALED IN WALLS WHEREVER POSSIBLE.
3. KITCHEN EQUIPMENT CONTRACTOR SHALL INSTALL ALL FABRICATED EQUIPMENT, FURNISH AND INSTALL ALL OUTLETS, JUNCTION BOXES, SWITCHES, CONTROLS, CONDUIT AND SERVICE FITTINGS FOR EACH DEVICE BUILT-INTO OR FORMING AN INTEGRAL PART OF THE EQUIPMENT. WHERE FABRICATED EQUIPMENT IS SUPPLIED WITH PANELBOARDS, PANELBOARDS SHALL BE COMPLETE WITH MAIN CIRCUIT BREAKERS FOR EACH DEVICE OR OUTLET WITHIN THE FIXTURE. ELECTRICAL CONTRACTOR TO FURNISH AND INSTALL ALL WIRING AND MAKE ALL INTERNAL AND FINAL CONNECTIONS. KITCHEN EQUIPMENT CONTRACTOR TO FURNISH TO ELECTRICAL CONTRACTOR A WIRING SCHEMATIC FOR HIS USE.
4. LARGE PIECES OF EQUIPMENT SUCH AS CHEF'S COUNTERS, LOOKS COUNTERS, ETC., WILL BE DELIVERED TO THE JOBSITE IN SECTIONS. ELECTRICAL CONTRACTOR SHALL MAKE INTERCONNECTIONS BETWEEN SECTIONS AFTER KITCHEN EQUIPMENT CONTRACTOR HAS SET EQUIPMENT IN PLACE. COORDINATE WITH KITCHEN EQUIPMENT CONTRACTOR ITEMS THAT REQUIRE FILED ASSEMBLY.
5. ELECTRICAL CONTRACTOR SHALL COORDINATE ALL KITCHEN EQUIPMENT FINAL CONNECTIONS WITH THE KITCHEN EQUIPMENT SUPPLIER PRIOR TO ANY ROUGH-IN WORK IS STARTED.

PANELBOARD SCHEDULE (CONCESSION BUILDING)

DESIGNATION: PPHK — S.C. RATING: 10,000 A RMS SYSTEM — REMARKS: SERVICE ENTRANCE RATED

LOCATION: KITCHEN — SERVICE: 277/480V, 3Ø, 4W

RATING: 200 AMPS — MOUNTING: SURFACE

MAIN: 200 AMP MCB

CKT. NO.	LOAD DESIGNATION	CONN. LOAD (KVA)	BREAKER TRIP	BREAKER POLE	PHASE A	PHASE B	PHASE C	BREAKER POLE	BREAKER TRIP	CONN. LOAD (KVA)	LOAD DESIGNATION	CKT. NO.
1	-		-						-		-	2
3	PANEL PPLK		60						20		MAU-1	4
5	-		-						-		-	6
7	-		-						-		-	8
9	KEF-1		20						20		AC-3	10
11	-		-						-		-	12
13	SPARE		20						20		SPARE	14
15	SPARE		20						20		SPARE	16
17	SPARE		20						20		SPARE	18
19	SPARE		20						20		SPARE	20
21	SPARE		20						20		SPARE	22
23	SPARE		20						20		SPARE	24
25	SPARE		20						20		SPARE	26
27	SPARE		20						20		SPARE	28
29	SPARE		20						20		SPARE	30
31	SPARE		20						20		SPARE	32
33	SPARE		20						20		SPARE	34
35	SPARE		20						20		SPARE	36
37	SPARE		20						20		SPARE	38
39	SPARE		20						20		SPARE	40
41	SPARE		20						20		SPARE	42

PANELBOARD SCHEDULE (CONCESSION BUILDING)

DESIGNATION: PPLK — S.C. RATING: 10,000 A RMS SYSTEM — REMARKS:

LOCATION: KITCHEN — SERVICE: 120/208V, 3Ø, 4W

RATING: 200 AMPS — MOUNTING: SURFACE

MAIN: 150 AMP MCB

CKT. NO.	LOAD DESIGNATION	CONN. LOAD (KVA)	BREAKER TRIP	BREAKER POLE	PHASE A	PHASE B	PHASE C	BREAKER POLE	BREAKER TRIP	CONN. LOAD (KVA)	LOAD DESIGNATION	CKT. NO.
1	CHEF TABLE		20						20		LIGHTING	2
3	GENERAL USE OUTLET		20						20		ICE MACHINE	4
5	SODA DISPENSER		20						20		COFFEE MAKER	6
7	GENERAL USE OUTLET		20						20		BIG DIPPER	8
9	FREEZER		20						20		REFRIGERATOR	10
11	REFRIGERATOR		20						20		GENERAL USE OUTLET	12
13	GENERAL USE OUTLET		20						20		FIRE SUPPRESSION SYSTEM	14
15	GENERAL USE OUTLET		20						20		SANDWICH PREP	16
17	GRIDDLE AND BOILER		20						20		4 BURNER GAS RANGE	18
19	GAS FRYER		20						20		GENERAL USE OUTLET	20
21	ICE CREAM FREEZER		20						20		GAS WATER HEATER	22
23	ACCU-3		20						20		SPARE	24
25	-		-						20		SPARE	26
27	SPARE		20						20		SPARE	28
29	SPARE		20						20		SPARE	30
31	SPARE		20						20		SPARE	32
33	SPARE		20						20		SPARE	34
35	SPARE		20						20		SPARE	36
37	SPARE		20						20		SPARE	38
39	SPARE		20						20		SPARE	40
41	SPARE		20						20		SPARE	42

CONSTRUCTION DOCUMENTS
12/11/15

COPYRIGHT 2015 WESTON & SAMPSON

Weston&Sampson®
273 Dividend Road, Rocky Hill, CT 06067
(860) 513-1473 (800) SAMPSON
www.westonandsampson.com

No.	Date	Dr.By	Ck.By	App.By	Description
		A P	P R	R O	V E D

DECEMBER 18, 2015
DATE

REGISTERED PROFESSIONAL ENGINEER

STATE OF CONNECTICUT ★ ROBERT F. McKEEER ★ No. 22067 ★ LICENSED PROFESSIONAL ENGINEER

TOWN OF GREENWICH – DEPARTMENT OF PUBLIC WORKS
RITCH AVENUE WEST, GREENWICH, CONNECTICUT

BYRAM PARK POOL REPLACEMENT

ELECTRICAL KITCHEN POWER PLAN

CADD NO.	SCALE:	CONTRACT:	JOB NO.	DR.BY	DSN.BY	CHK.BY	APP.BY
–	AS NOTED		2130336	DNM	DNM	RFM	RFM

E3.02

FILE NO. –

SHEET – OF

Z:\CT-Rockyhill-Projects\Greenwich CT\Greenwich Parks and Recreation\Byram Park\CAD\MEP\Electrical\E3.02 Electrical Kitchen Power Plan.dwg

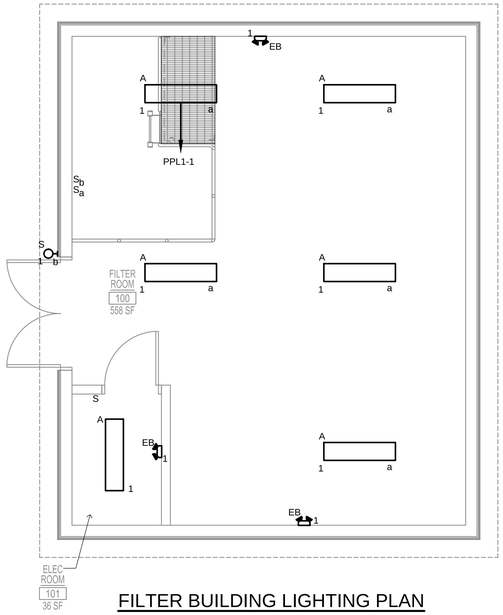

FILTER BUILDING LIGHTING PLAN

SCALE: 1/4" = 1'-0"

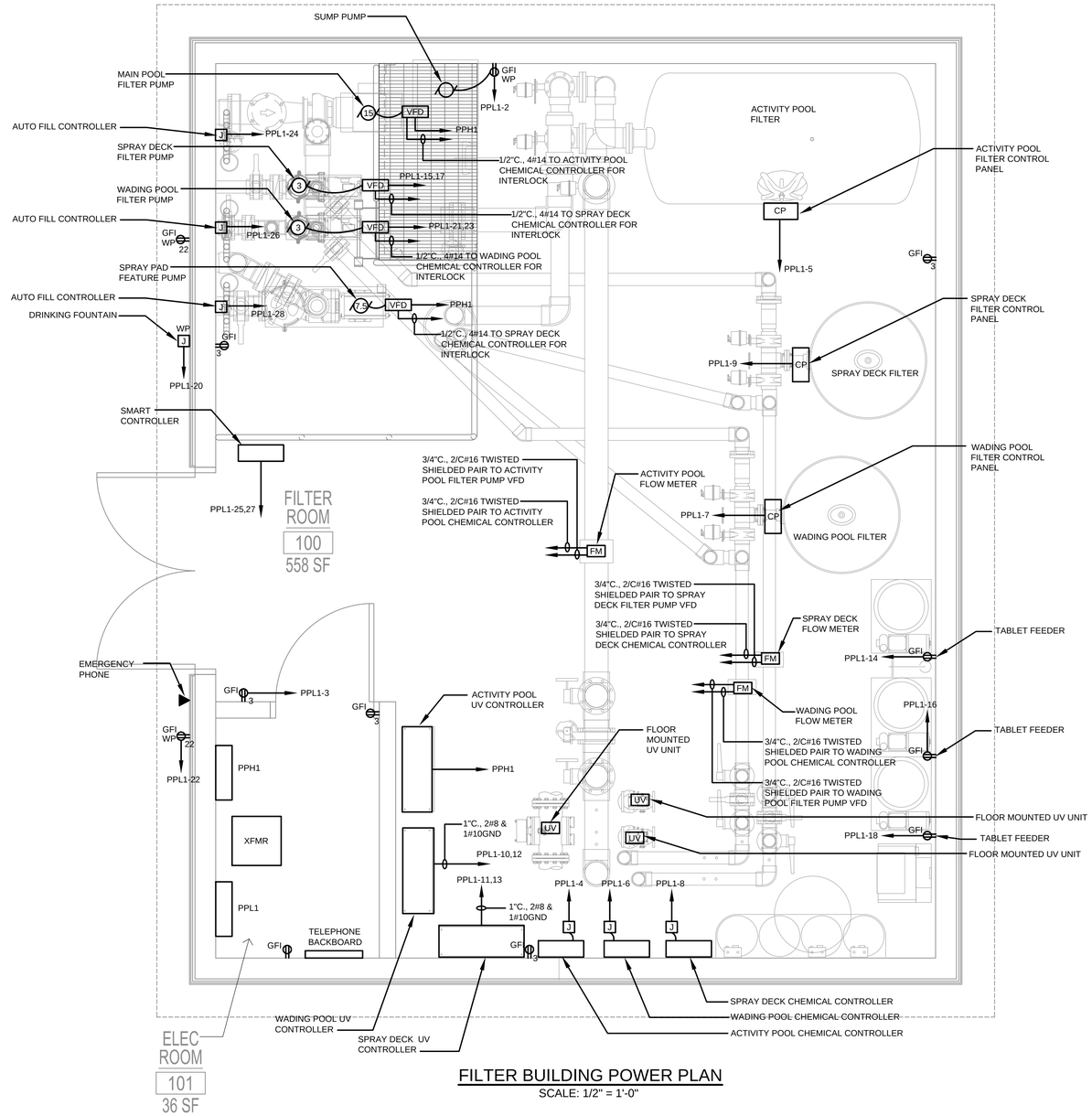

FILTER BUILDING POWER PLAN

SCALE: 1/2" = 1'-0"

UV SYSTEM NOTES:

1. CONTRACTOR SHALL RUN (2) 1-1/4" CONDUITS FROM THE UV CONTROL PANEL TO THE RESPECTIVE UV UNIT. CONTRACTOR SHALL INSTALL UV CONTROL PANEL FURNISHED POWER CABLE WITHIN (1) 1-1/4"C AND UV CONTROL PANEL FURNISHED MONITORING AND CONTROL CABLE IN THE OTHER 1-1/4"C. CONTRACTOR SHALL COORDINATE UPSIZING THE CONDUIT OR REMOVAL AND REINSTALLATION OF THE CABLE END CONNECTOR TO FACILITATE CABLE INSTALLATION WITHIN THE CONDUITS.
2. FINAL CONNECTION TO THE UV UNIT SHALL BE BY QUALIFIED FACTORY TRAINED TECHNICIANS DURING THE SYSTEM STARTUP AND COMMISSIONING.

POWER DRAWING NOTES:

1. WIRING IS SHOWN ON DRAWINGS ONLY FOR SPECIFIC ROUTING OR SPECIAL CONDITIONS.
2. WIRING AND CONDUIT SHALL BE REQUIRED BETWEEN ALL OUTLETS AND PANELS INDICATED WITH CIRCUIT NUMBERS AND PANEL DESIGNATIONS.
3. ALTHOUGH BRANCH CIRCUIT WIRING AND CONDUIT IS NOT SHOWN, IT IS THE INTENT OF THESE DOCUMENTS THAT A COMPLETE BRANCH CIRCUIT WIRING SYSTEM BE INSTALLED.
4. MINIMUM WIRE SIZE SHALL BE NO. 12 AWG FOR POWER AND LIGHTING CIRCUITS AND NO. 14 AWG FOR CONTROL WIRING. 120V BRANCH CIRCUITS OF MORE THAN 100 FEET AND 277V CIRCUITS OF MORE THAN 150 FEET FROM CENTER OF LOAD TO PANEL SHALL BE #10 AWG.
5. ALL SWITCH CONTROLS SHALL BE PROVIDED WITH WIRING AND CONDUIT AS REQUIRED.
6. ALL BRANCH CIRCUIT CONDUCTORS SHALL BE 98% CONDUCTIVITY, COPPER MINIMUM #12 AWG SIZE, THWN/THHN INSULATION, 600 VOLTS RATED, UNLESS OTHERWISE NOTED.

CONSTRUCTION DOCUMENTS
12/11/15

COPYRIGHT 2015 WESTON & SAMPSON

Weston&Sampson®
273 Dividend Road, Rocky Hill, CT 06067
(860) 513-1473 (800) SAMPSON
www.westonandsampson.com

No.	Date	Dr.By	Ck.By	App.By	Description
		A	P	P	R O V E D

DECEMBER 18, 2015
DATE

REGISTERED PROFESSIONAL ENGINEER

STATE OF CONNECTICUT ROGER F. McKEEFER No. 22057 LICENSED PROFESSIONAL ENGINEER

TOWN OF GREENWICH – DEPARTMENT OF PUBLIC WORKS
RITCH AVENUE WEST, GREENWICH, CONNECTICUT
BYRAM PARK POOL REPLACEMENT

ELECTRICAL FILTER BUILDING PLAN

CADD NO.	SCALE:	CONTRACT:	JOB NO.	DR.BY	DSN.BY	CHK.BY	APP.BY
I	AS NOTED		2130336	DNM	DNM	RFM	RFM

E3.03

FILE NO. I

SHEET – OF

Z:\CT-RockyHill-Projects\Greenwich CT\Greenwich Parks and Recreation\Byram Park\CAD\MEP\Electrical\E3.03 Electrical Filter Building Plans.dwg

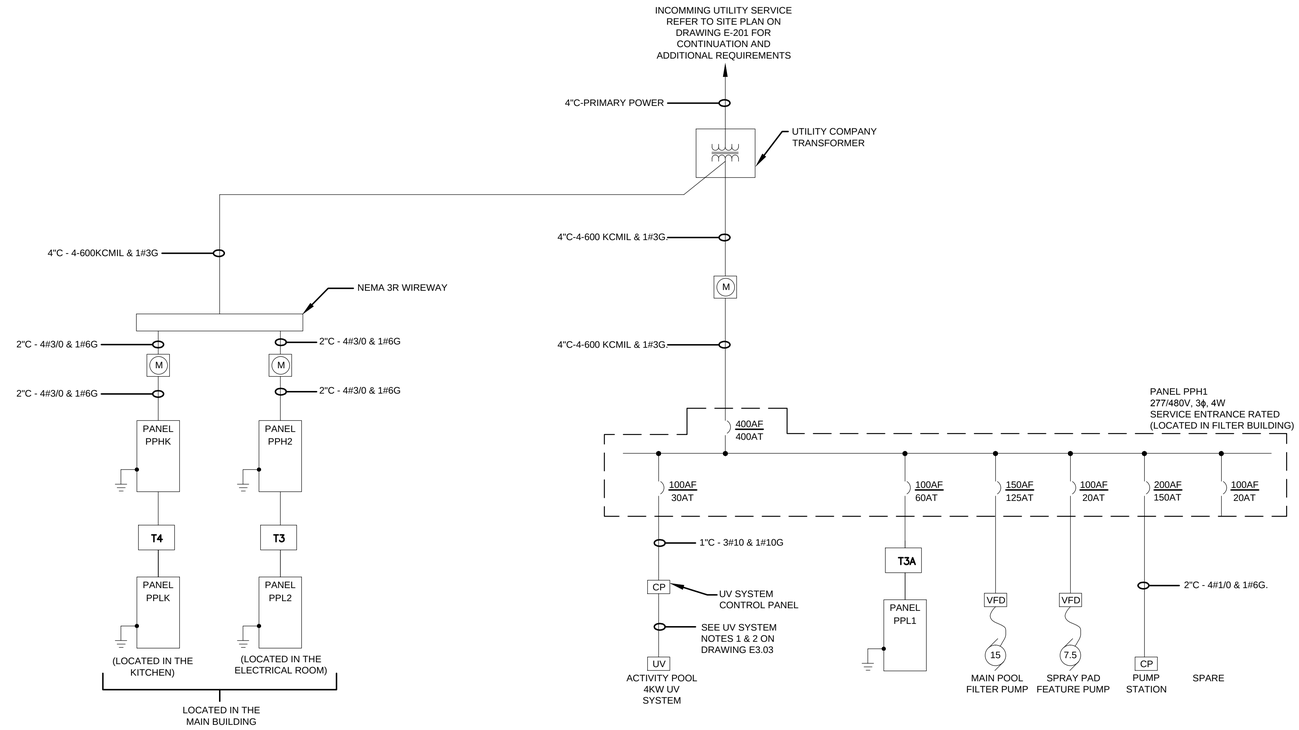

ONE LINE DIAGRAM

SCALE: N.T.S

DRY TYPE TRANSFORMER SCHEDULE								
SIZE	KVA	PRIMARY AMPS	SECONDARY AMPS	480 VOLT (2) OVERCURRENT	208 VOLT (3) OVERCURRENT	480V PRIMARY FEEDER	120/208V SECONDARY FEEDER	GROUNDING (4) CONDUCTOR
T1	9	11	25	20A, 3P	30A, 3P	3#12 & 1#12G - 3/4"C.	4#10 & 1#10G - 3/4"C.	1#8 - 3/4"C
T2	15	18	42	30A, 3P	50A, 3P	3#10 & 1#10G - 3/4"C.	4#6 & 1#8G - 1"C.	1#8 - 3/4"C
T3	30	36	83	60A, 3P	100A, 3P	3#4 & 1#10G - 1"C.	4#1 & 1#6G - 1 1/2"C.	1#6 - 3/4"C
T3A	30	36	125	60A, 3P	150A, 3P	3#4 & 1#10G - 1"C.	3#1/0 & 1#6G - 2"C.	1#6 - 3/4"C
T4	45	54	125	80A, 3P	150A, 3P	3#3 & 1#8G - 1 1/4"C.	4#1/0 & 1#6G - 2"C.	1#6 - 3/4"C
T5	75	90	208	150A, 3P	250A, 3P	3#1/0 & 1#6G - 1 1/2"C.	4#250KCMIL & 1#2G - 3"C.	1#2 - 3/4"C
T6	112.5	135	313	250A, 3P	400A, 3P	3#250KCMIL & 1#4G - 2 1/24"C.	4#500KCMIL & 1#1/0G - 4"C.	1#1/0 - 3/4"C

TRANSFORMER SCHEDULE NOTES:

1. ALL PHASE AND NEUTRAL CONDUCTOR SIZES ARE BASED ON COPPER CONDUCTORS PER N.E.C. TABLE 310-16.
2. MANUFACTURERS SELECTION FOR THE TYPE OF PRIMARY BREAKER (THERMAL MAGNETIC VS. SOLID STATE) SHALL ENSURE COORDINATION WITH TRANSFORMER IN-RUSH CURRENT. IF MIS COORDINATION IS IDENTIFIED BY THE COORDINATION STUDY, THE MANUFACTURER SHALL REPLACE THE DEVICE WITH A DEVICE THAT WILL PROPERLY COORDINATE, AT NO ADDITIONAL COST.
3. SECONDARY OVERCURRENT PROTECTION SHALL BE LOCATED WITHIN A PANELBOARD (MAIN BREAKER) OR INDIVIDUALLY MOUNTED CIRCUIT BREAKER. THE SECONDARY OVERCURRENT PROTECTION DEVICE SHALL BE LOCATED SUCH THAT THE MAXIMUM LENGTH OF SECONDARY CONDUCTORS DO NOT EXCEED 10'-0".
4. THE GROUNDING ELECTRODE CONDUCTOR SHALL BE UNSPLICED AND INSTALLED AS OPEN WIRING OR RUN IN NON METALLIC (PVC SCHEDULE 40) CONDUIT TO PROTECT IT FROM SEVERE DAMAGE.

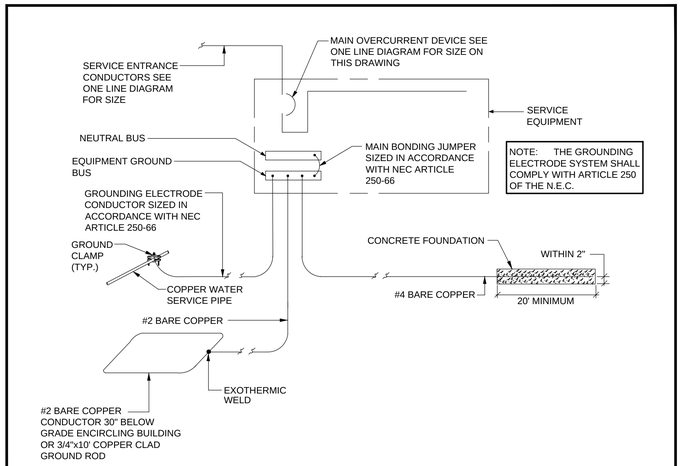

SERVICE GROUNDING DETAIL

SCALE: N.T.S

CONSTRUCTION DOCUMENTS
12/11/15

COPYRIGHT 2015 WESTON & SAMPSON

Z:\CT-Rockyhill-Projects\Greenwich CT\Greenwich Parks and Recreation\Byram Park\CAD\MEP\Electrical\E4.00 Electrical One Line Diagram.dwg

Weston&Sampson®
273 Dividend Road, Rocky Hill, CT 06067
(860) 513-1473 (800) SAMPSON
www.westonandsampson.com

No.	Date	Dr.By	Ck.By	App.By	Description
		A	P	P	R O V E D

DECEMBER 18, 2015
DATE

REGISTERED PROFESSIONAL ENGINEER

STATE OF CONNECTICUT ROBERT F. McKEEFER No. 22057 LICENSED PROFESSIONAL ENGINEER

TOWN OF GREENWICH – DEPARTMENT OF PUBLIC WORKS
RITCH AVENUE WEST, GREENWICH, CONNECTICUT
BYRAM PARK POOL REPLACEMENT

ELECTRICAL ONE LINE DIAGRAM

CADD NO.	SCALE:	CONTRACT:	JOB NO.	DR BY	DSN BY	CHK BY	APP BY
–	NONE		2130336	DNM	DNM	RFM	RFM

FILE NO. –

E4.00

SHEET – OF

LIGHTING FIXTURE SCHEDULE

TYPE	DESCRIPTION	MANUFACTURER	CATALOG NUMBER	LAMP NO.	LAMP TYPE	MOUNTING	VOLTAGE	REMARKS
A	4' INDUSTRIAL POLYCARBONATE DAMP LOCATION LISTED LED FIXTURE	COOPER/METALUX	4SNLED-LD4-36SL-UNV-L835-CD1-U	1	3603 LUMENS,28W 3500K LED	CEILING SURFACE	120	
B	4' ENCLOSED AND GASKETED WET LOCATION LISTED LED FIXTURE	COOPER/METALUX	4WNLED-LD1-41 -F-UNV-L835-CD1-U	1	4100 LUMENS,48W 3500K LED	CEILING SURFACE	120	
C	6" LED RECESSED SHOWER LIGHT FIXTURE	COOPER/HALO	SLD612835WH	1	1200 LUMENS,15W 3500K LED	CEILING SURFACE	120	
D	4' ENCLOSED AND GASKETED WET LOCATION LISTED LED KITCHEN FIXTURE	COOPER/METALUX	4VT2-LD4-4-DR-UNV-L840-CD1-WL-U	1	4000 LUMENS,38W 3500K LED	CEILING SURFACE	120	
S	EXTERIOR WALL PACK	COOPER/LUMARK LIGHTING	#LD-WP-FC-4A-120V-WG/WPFC	1	4000 LUMENS, 3500K LED	WALL SURFACE	120	
E	EXIT LIGHT	COOPER/ISOLITE	#RL-EM-R-WW	1	LED	WALL SURFACE	120	
EB	EMERGENCY BATTERY UNIT	COOPER/ISOLITE	#RL2-LED-2-WH	2	LED	WALL SURFACE	120	

LIGHTING FIXTURE SCHEDULE REQUIREMENTS

1. FURNISH AND INSTALL ALL MATERIALS, ACCESSORIES AND OTHER EQUIPMENT NECESSARY FOR THE COMPLETE AND PROPER INSTALLATION OF ALL LIGHTING FIXTURES INCLUDED IN THIS CONTRACT. PROVIDE ALL NECESSARY ACCESSORIES AS NECESSARY TO PROVIDE A COMPLETE LIGHTING SYSTEM.
2. SPECIFICATIONS AND DRAWINGS ARE INTENDED TO CONVEY THE FEATURES, FUNCTION AND CHARACTER OF THE FIXTURES ONLY, AND DO NOT UNDERTAKE TO SPECIFY EVERY ITEM OR DETAIL NECESSARY. MINOR DETAILS NECESSARY FOR THE PROPER EXECUTION AND COMPLETION OF THE LIGHTING SYSTEM NOT INDICATED ON THE DRAWINGS NOR SPECIFIED SHALL BE PROVIDED AS IF THEY WERE SPECIFIED HERE OR INDICATED ON THE DRAWINGS.
3. FIXTURES SUBSTITUTIONS (FROM MANUFACTURERS OTHER THAN THOSE LISTED) SHALL BE EQUAL IN ALL RESPECTS OF PERFORMANCE, QUALITY OF CONSTRUCTION, SUITABILITY TO PROJECT CONDITIONS AND APPEARANCE OF THE SPECIFIED FIXTURE. SUBSTITUTIONS SHALL BE SUBMITTED FOR APPROVAL IN THE FORM OF CATALOG CUTS OR DETAIL DRAWINGS.
4. THE ELECTRICAL CONTRACTOR SHALL COORDINATE THE LIGHTING FIXTURE INSTALLATION WITH THE DETAILS OF THE ARCHITECTURAL, STRUCTURAL, ELECTRICAL, MECHANICAL AND OTHER RELATED TRADES TO ASSURE AN EFFICIENT INSTALLATION.
5. INSTALL EACH FIXTURE PROPERLY AND SAFELY. PROVIDE NECESSARY STRUCTURAL SUPPORTS WHERE REQUIRED FOR THE SAFE ATTACHMENT OF ALL LIGHTING FIXTURES. FURNISH AND ERECT HANGERS, RODS, MOUNTING BRACKETS, SUPPORTS AND OTHER EQUIPMENT REQUIRED. COORDINATE CONDUIT ENTRY LOCATIONS WITH FIXTURE MANUFACTURERS PRIOR TO ROUGHING. ALL LIGHTING FIXTURES ARE TO BE INDEPENDENTLY SUPPORTED FROM THE STRUCTURE BY MEANS OF JACK CHAIN, THREADED ROD OR OTHER ENGINEER APPROVED METHODS.
6. INSTALL PENDANT LIGHTING FIXTURES PLUMB AND TRUE, AT THE HEIGHT FROM THE FLOOR SPECIFIED ON THE DRAWINGS. IN CASES WHERE CONDITIONS MAKE THIS IMPRACTICAL, REFER TO THE ARCHITECT FOR A DECISION. USE BALL ALIGNERS AND CANOPIES ON PENDANT FIXTURES UNLESS NOTED OTHERWISE. RIGIDLY ALIGN CONTINUOUS ROWS OF LIGHTING FIXTURES FOR TRUE IN-LINE APPEARANCE. SUPPORT ALL LIGHTING FIXTURES INDEPENDENTLY OF DUCT WORK OR PIPING. WHENEVER A FIXTURE OR ITS HANGER CANOPY IS APPLIED TO A SURFACE MOUNTED OUTLET BOX, PROVIDE A FINISHING RING TO CONCEAL THE OUTLET BOX.
7. EFFECTIVELY PROTECT ALL LIGHTING EQUIPMENT AGAINST DAMAGE FROM THE TIME OF FABRICATION TO FINAL ACCEPTANCE OF THE WORK. INSTALL REFLECTOR CONES, BAFFLES, APERTURE PLATES, LIGHT CONTROLLING ELEMENT FOR AIR HANDLING FIXTURES, AND DECORATIVE ELEMENTS AFTER COMPLETION OF CEILING TILES, PAINTING AND GENERAL CLEANUP. REPLACE BLEMISHED, DAMAGED OR UNSATISFACTORY FIXTURES AS DIRECTED.

PANELBOARD SCHEDULE (MAIN BUILDING)

DESIGNATION: PPH2 — S.C. RATING: 10,000 A RMS SYSTEM — REMARKS: SERVICE ENTRANCE RATED
LOCATION: MAIN BUILDING — SERVICE: 277/480V, 3Ø, 4W
RATING: 200 AMPS — MOUNTING: SURFACE
MAIN: 200 AMP MCB

CKT. NO.	LOAD DESIGNATION	CONN. LOAD (KVA)	BREAKER TRIP	BREAKER POLE	PHASE A B C	BREAKER POLE	BREAKER TRIP	CONN. LOAD (KVA)	LOAD DESIGNATION	CKT. NO.
1	-		-				-		-	2
3	PANEL PPL1		60				50		ELECTRIC WATER HEATER	4
5	-		-				-		-	6
7	SPARE		20				-		-	8
9	SPARE		20				50		ELECTRIC WATER HEATER	10
11	SPARE		20				-		-	12
13	SPARE		20				20		SPARE	14
15	SPARE		20				20		SPARE	16
17	SPARE		20				20		SPARE	18
19	SPARE		20				20		SPARE	20
21	SPARE		20				20		SPARE	22
23	SPARE		20				20		SPARE	24
25	SPARE		20				20		SPARE	26
27	SPARE		20				20		SPARE	28
29	SPARE		20				20		SPARE	30
31	SPARE		20				20		SPARE	32
33	SPARE		20				20		SPARE	34
35	SPARE		20				20		SPARE	36
37	SPARE		20				20		SPARE	38
39	SPARE		20				20		SPARE	40
41	SPARE		20				20		SPARE	42

PANELBOARD SCHEDULE (MAIN BUILDING)

DESIGNATION: PPL2 — S.C. RATING: 10,000 A RMS SYSTEM — REMARKS:
LOCATION: MAIN BUILDING — SERVICE: 120/208V, 3Ø, 4W
RATING: 100 AMPS — MOUNTING: SURFACE
MAIN: 100 AMP MCB

CKT. NO.	LOAD DESIGNATION	CONN. LOAD (KVA)	BREAKER TRIP	BREAKER POLE	PHASE A B C	BREAKER POLE	BREAKER TRIP	CONN. LOAD (KVA)	LOAD DESIGNATION	CKT. NO.
1	INTERIOR LIGHTING		20				20		RECPETACLE ELECTRICAL ROOM	2
3	INTERIOR LIGHTING		20				20		JANITOR CLOSET RECEPTACLES	4
5	EXTERIOR LIGHTING		20				20		LOCKER ROOM RECEPTACLES	6
7	ENTRY GATE LIGHTING AND RECEPTACLE		20				20		EXTERIOR RECEPTACLES	8
9	JANITOR CLOSET RECEPTACLES		20				20		EXTERIOR RECEPTACLES	10
11	TOILET ROOM RECEPTACLES		20				20		LIFEGAURD ROOM RECEPTACLES	12
13	LOCKER ROOM RECEPTACLES		20				20		DRINKING FOUNTAIN	14
15	EF-1		20				20		EF-2	16
17	ACCU-1		20				20		ACCU-2	18
19	-		-				-		-	20
21	VALVE VAULT SOLENOID		20				20		SPARE	22
23	DRINKING FOUNTAIN		20				20		SPARE	24
25	SPARE		20				20		SPARE	26
27	SPARE		20				20		SPARE	28
29	SPARE		20				20		SPARE	30
31	SPARE		20				20		SPARE	32
33	SPARE		20				20		SPARE	34
35	SPARE		20				20		SPARE	36
37	SPARE		20				20		SPARE	38
39	SPARE		20				20		SPARE	40
41	SPARE		20				20		SPARE	42

PANELBOARD SCHEDULE (FILTER BUILDING)

DESIGNATION: PPL1 — S.C. RATING: 10,000 A RMS SYSTEM — REMARKS:
LOCATION: ELECTRICAL ROOM — SERVICE: 120/240V, 1Ø, 3W
RATING: 100 AMPS — MOUNTING: SURFACE
MAIN: 100 AMP MCB

CKT. NO.	LOAD DESIGNATION	CONN. LOAD (KVA)	BREAKER TRIP	BREAKER POLE	PHASE A B C	BREAKER POLE	BREAKER TRIP	CONN. LOAD (KVA)	LOAD DESIGNATION	CKT. NO.
1	LIGHTING		20				20		SUMP PUMP	2
3	GENERAL RECEPTACLES		20				20		ACTIVITY POOL CHEMICAL CONTROLLER	4
5	ACTIVITY POOL FILTER CONTROL PANEL		20				20		WADING POOL CHEMICAL CONTROLLER	6
7	WADING POOL FILTER CONTROL PANEL		20				20		SPRAY DECK CHEMICAL CONTROLLER	8
9	SPRAY DECK FILTER CONTROL PANEL		20				40		WADING POOL UV CONTROLLER	10
11	SPRAY DECK UV CONTROLLER		40				-		-	12
13	-		-				20		TABLET	14
15	SPRAY DECK FILTER PUMP		20				20		TABLET	16
17	-		-				20		TABLET	18
19	SPARE						20		DRINKING FOUNTAIN	20
21	WADING POOL FILTER PUMP		20				20		OUTDOOR RECEPTACLES	22
23	-		-				20		AUTO FILL CONTROLLER	24
25	SMART CONTROLLER		20				20		AUTO FILL CONTROLLER	26
27	-		-				20		AUTO FILL CONTROLLER	28
29	SPARE		20				20		SPARE	30
31	SPARE		20				20		SPARE	32
33	SPARE		20				20		SPARE	34
35	SPARE		20				20		SPARE	36
37	SPARE		20				20		SPARE	38
39	SPARE		20				20		SPARE	40
41	SPARE		20				20		SPARE	42

MECHANICAL EQUIPMENT SCHEDULE

DESIGNATION	DESCRIPTION	PANEL/ CIRCUIT	CIRCUIT BREAKER	FEEDER	VOLT	Ø	FLA	MCA	HP	KVA								VFD	DEVICE RATINGS
ACCU-1	SPLIT SYSTEM AIR CONDITIONING UNIT - OUTDOOR UNIT	PPL2-17,19	20A-2P	1/2"C. - 2#12 & 1#12 GND	240	1	0.93	17.1								X			
AC-1	SPLIT SYSTEM AIR CONDITIONING UNIT - INDOOR UNIT	ACCU-1	20A-1P	1/2"C. - 2#12 & 1#12 GND	120	1	0.79	1			X								POWERED FROM ACCU-1
ACCU-2	SPLIT SYSTEM AIR CONDITIONING UNIT - OUTDOOR UNIT	PPL2-18,20	20A-2P	1/2"C. - 2#12 & 1#12 GND	240	1	0.56	12								X			
AC-2	SPLIT SYSTEM AIR CONDITIONING UNIT - INDOOR UNIT	ACCU-2	20A-1P	1/2"C. - 2#12 & 1#12 GND	120	1	0.76	1			X								POWERED FROM ACCU-1
ACCU-3	SPLIT SYSTEM AIR CONDITIONING UNIT - OUTDOOR UNIT	PPLK-23,25	20A-2P	1/2"C. - 2#12 & 1#12 GND	240	1	0.74	18	1/8							X			
AC-3	SPLIT SYSTEM AIR CONDITIONING UNIT - INDOOR UNIT	PPHK-8,10,12	20A-3P	1/2"C. - 3#12 & 1#12 GND	480	3			1/3							X			
EF-1	EXHAUST FAN	PPL2-15	20A-1P	1/2"C. - 2#12 & 1#12 GND	120	1	11.3		.75		X								
EF-2	EXHAUST FAN	PPL2-16	20A-1P	1/2"C. - 2#12 & 1#12 GND	120	1	11.3		.75		X								
KEF-1	KITCHEN EXHAUST FAN	PPHK-7,9,11	20A-3P	1/2"C. - 3#12 & 1#12 GND	480	3	2.1		1							X			
MAU-1	MAKE-UP AIR UNIT	PPHK-2,4,6	20A-3P	1/2"C. - 3#12 & 1#12 GND	480	3		4.1	1.5							X			

MECHANICAL EQUIPMENT SCHEDULE NOTES:

1. STARTERS (FVNR, VFD, RVNR, ETC.,) SHALL BE FURNISHED AND INSTALLED BY MECHANICAL CONTRACTORS AND WIRED BY ELECTRICAL CONTRACTOR. FOR EXACT LOCATIONS REFER TO MECHANICAL DRAWINGS.
2. E.C. SHALL COORDINATE FUSE SIZE AND OVERCURRENT PROTECTION FOR ALL MECHANICAL EQUIPMENT W/ MANUFACTURER'S RECOMMENDATION

CONSTRUCTION DOCUMENTS 12/11/15

COPYRIGHT 2015 WESTON & SAMPSON

Weston&Sampson®
273 Dividend Road, Rocky Hill, CT 06067
(860) 513-1473 (800) SAMPSON
www.westonandsampson.com

No.	Date	Dr.By	Ck.By	App.By	Description
		A P	P R	O V	E D

DECEMBER 18, 2015 DATE

REGISTERED PROFESSIONAL ENGINEER

STATE OF CONNECTICUT ROBERT F. McKEEFER No. 22697 REGISTERED PROFESSIONAL ENGINEER LICENSED

TOWN OF GREENWICH – DEPARTMENT OF PUBLIC WORKS
RITCH AVENUE WEST, GREENWICH, CONNECTICUT
BYRAM PARK POOL REPLACEMENT
ELECTRICAL SCHEDULES

CADD NO.	SCALE:	CONTRACT:	JOB NO.	DR.BY	DSN.BY	CHK.BY	APP.BY
1	NONE	NONE	21303.36	DNM	DNM	RFM	RFM

E5.00

FILE NO. 1

SHEET – OF

Z:\CT-Rockyhill-Projects\Greenwich CT\Greenwich Parks and Recreation\Byram Park\CAD\MEP\Electrical\E5.00 Electrical Schedules.dwg

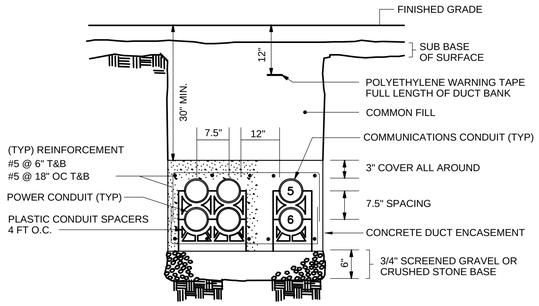

1	TYPICAL CONCRETE ENCASED DUCTBANK DETAIL	NO SCALE

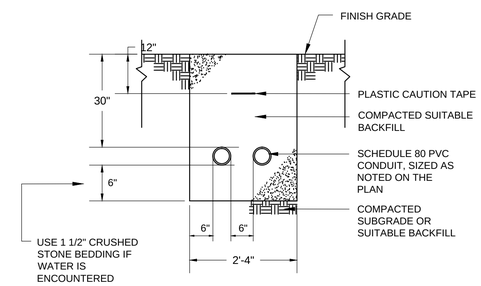

2	TYPICAL DIRECT BURIED CONDUIT DETAIL	NO SCALE

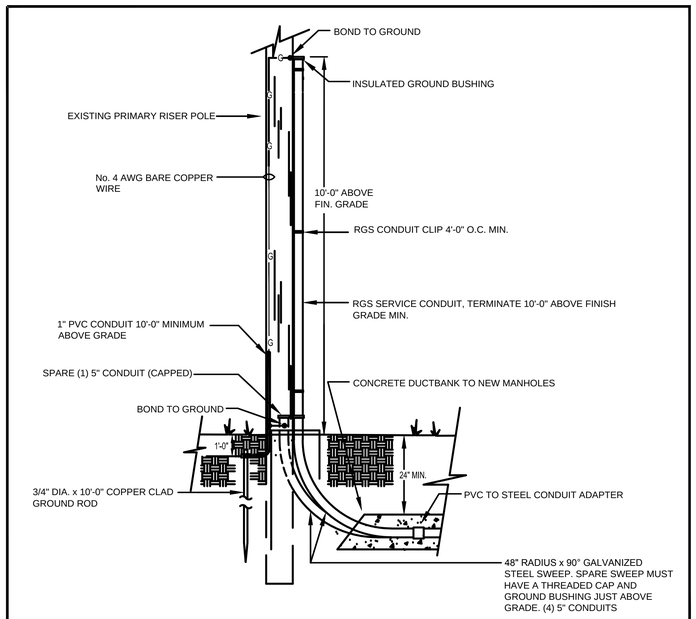

3	TYPICAL RISER POLE DETAIL	NO SCALE

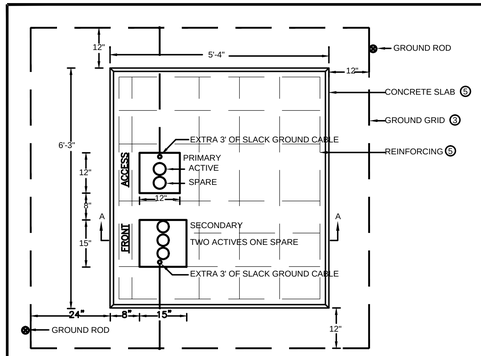

PLAN VIEW

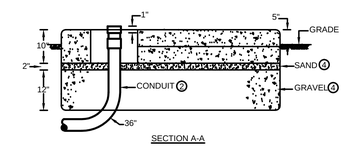

SECTION A-A

PADMOUNT - FOUNDATION

1. SCOPE - THIS STANDARD COVERS SPECIFICATIONS FOR THE CONSTRUCTION OF PADMOUNT TRANSFORMER FOUNDATIONS AND GROUNDING.
2. CONDUIT - INSTALL AS SHOWN BEFORE SLAB IS POURED. USE 36" RADIUS BENDS, WITH COUPLINGS, NIPPLES AND BUSHINGS AS REQUIRED. (MATERIAL MAY BE GALVANIZED STEEL, BLACK IRON, OR TYPE II FIBER OR PLASTIC.) TERMINATIONS OF CONDUITS SHALL BE LOCATED EXACTLY AS SHOWN, SOLID OR DOTTED, DEPENDING UPON NUMBER OF DUCTS.

   THE NIPPLE AND BUSHING SHOULD BE INSTALLED AFTER THE TRANSFORMER IS PLACED AND BEFORE THE CABLES ARE PULLED.
3. GROUND GRID - INSTALL #1/0 S.D. 7 STRAND BARE COPPER WIRE LOOP 1'-0" BELOW GRADE. BOND TO ALL EXPOSED METALLIC CONDUIT AND LEAVE 3'-0" OF WIRE ABOVE PAD FOR GROUNDING TRANSFORMER AT TWO OPPOSITE POINTS IN THE CABLE CONDUIT OPENINGS.

   PHOS-COPPER BRAZE CONNECTIONS, CADWELD, OR USE TWO APPROVED CONNECTORS PER JOINT. INSTALL TWO 8 FT. GALVANIZED STEEL (3/4") GROUND RODS WHERE SHOWN. LEAVE GRID EXPOSED UNTIL INSPECTED BY THE UTILITY COMPANY.
4. GRAVEL & SAND - SHALL BE PLACED AS SHOWN IN FIGS. 1 AND 2; THE GRAVEL BEING COMPACTED AND THE SAND THOROUGHLY WETTED JUST BEFORE PLACING THE CONCRETE.
5. CONCRETE SLAB - INSTALL 2000 LB. CONCRETE IN ACCORDANCE WITH UTILITY COMPANY REQUIREMENTS. REINFORCE WITH 1/2" RODS LOCATED AS SHOWN AND IN THE MIDDLE OF THE SLAB.

5	PAD MOUNTED TRANSFORMER DETAIL	NO SCALE

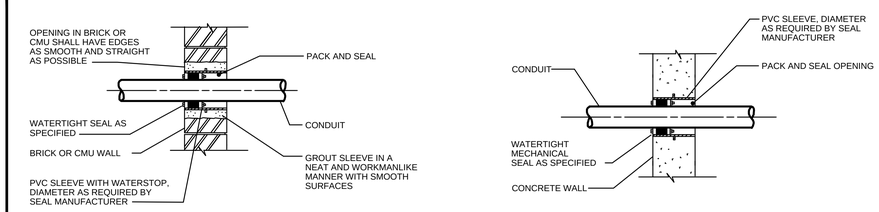

6	WATERTIGHT CONDUIT PENETRATIONS	NO SCALE

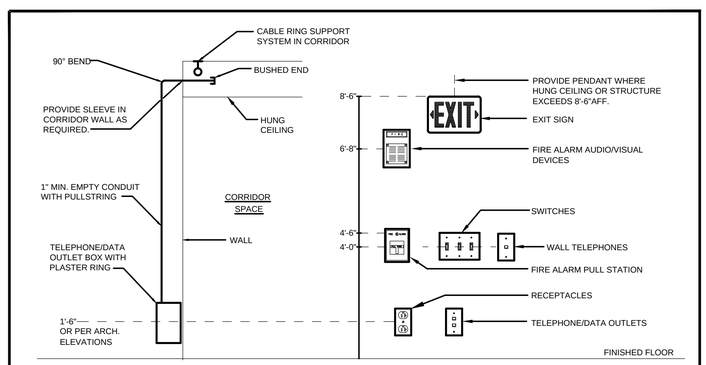

NOTES:

1. ALL MOUNTING HEIGHTS SHALL BE MEASURED FROM FINISHED FLOOR TO CENTERLINE OF DEVICE EXCEPT EXIT SIGNS.
2. DEVICES SHALL BE INSTALLED ON A COMMON VERTICAL CENTERLINE WHEREVER POSSIBLE.
3. ALL DEVICES SHALL BE INSTALLED AT MOUNTING HEIGHTS AS INDICATED ON THIS DETAIL UNLESS OTHERWISE NOTED ON ARCH. ELEVATIONS & DETAILS.

4	TYPICAL DEVICE MOUNTING HEIGHT DETAIL	NO SCALE

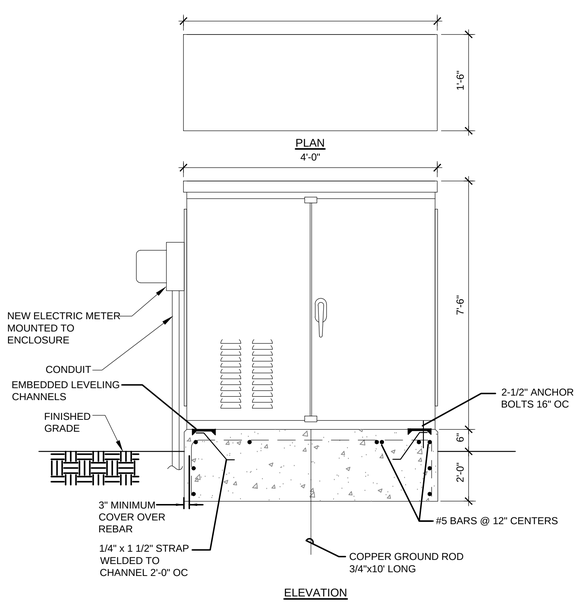

ELEVATION

7	TYPICAL PAD MOUNTED ELECTRICAL ENCLOSURE	NO SCALE

CONSTRUCTION DOCUMENTS
12/11/15

COPYRIGHT 2015 WESTON & SAMPSON

Weston&Sampson®
273 Dividend Road, Rocky Hill, CT 06067
(860) 513-1473 (800) SAMPSON
www.westonandsampson.com

No.	Date	Dr.By	Ck.By	App.By	Description
		A	P	P	R O V E D

DECEMBER 18, 2015
DATE

REGISTERED PROFESSIONAL ENGINEER

STATE OF CONNECTICUT ROBERT F. McKEEFER No. 22057 LICENSED PROFESSIONAL ENGINEER

TOWN OF GREENWICH – DEPARTMENT OF PUBLIC WORKS
RITCH AVENUE WEST, GREENWICH, CONNECTICUT
BYRAM PARK POOL REPLACEMENT

ELECTRICAL DETAILS

SCALE:	CONTRACT:	JOB NO.	DR BY	DSN BY	CHK BY	APP BY
NONE		2130336	DNM	DNM	RFM	RFM

CADD NO. 1
FILE NO. 1

E6.00

SHEET – OF

Z:\CT-Rockyhill-Projects\Greenwich CT\Greenwich Parks and Recreation\Byram Park\CAD\MEP\Electrical\E6.00 Electrical Details.dwg

PROCESS GENERAL NOTES

1. FOR PIPING MATERIAL, REFER TO THE PIPE SCHEDULE ON THIS SHEET.
2. INSTALL CORPORATION COCKS ON ALL BUILDING AND STRUCTURE INTERIOR PIPING HIGH POINTS TO PREVENT AIR BINDING. DETERMINE EXACT NUMBER AND LOCATIONS OF THESE CORPORATION COCKS BASED UPON INFORMATION DEPICTED ON DRAWINGS AND ACTUAL FIELD ROUTING OF PIPING. THESE MANUAL AIR RELEASES SHALL INCLUDE A 1/2 INCH BRASS CORPORATION COCK WITH 1/2 INCH COPPER TUBING ADEQUATELY SUPPORTED, EXTENDING TO A LOCAL AREA DRAIN. ROUTING OF TUBING AND SELECTED DRAIN TO BE REVIEWED WITH, AND ACCEPTED BY, ENGINEER.
3. PIPES 3–INCHES OR LESS IN DIAMETER SHALL HAVE UNIONS INSTALLED ADJACENT TO EQUIPMENT, FITTINGS AND TANKS, UNLESS OTHERWISE NOTED ON DRAWINGS. FLANGES ARE ACCEPTABLE ON 3–INCH OR LARGER DIAMETER PIPING.
4. ALL PIPES SHALL BE ADEQUATELY RESTRAINED AND SUPPORTED.
5. AFTER INSTALLATION, ALL PRESSURE (PUMPED) PIPELINES SHALL BE PRESSURE TESTED FOR TIGHTNESS AT 150 PSIG. ALL LEAKS SHALL BE CORRECTED AND RETESTED UNTIL PRESSURE TEST IS SATISFACTORILY COMPLETED.
6. ALL PIPING SHALL BE CLEANED BEFORE TESTING.
7. PROVIDE REINFORCED CONCRETE PAD UNDER ALL EQUIPMENT, CONTROL PANELS, PIPE AND EQUIPMENT SUPPORTS, TANKS, ETC. UNLESS OTHERWISE INDICATED (SEE DETAIL).
8. ALL EQUIPMENT AND PIPING LAYOUT DIMENSIONS SHALL BE FIELD VERIFIED AND COORDINATED WITH EQUIPMENT SUPPLIED, AND/OR EXISTING CONDITIONS.
9. DO NOT SCALE DISTANCES OR DIMENSIONS FROM THE DRAWINGS. WRITTEN DIMENSIONS SHALL PREVAIL. REPORT ANY DISCREPANCIES IMMEDIATELY.
10. PROVIDE OVERSIGHT AND COORDINATION OF SUBCONTRACTORS AND TRADE DISCIPLINES.
11. ALL MECHANICAL EQUIPMENT PIPING AND VALVES SHALL BE LAID TO SCALE IN THE FIELD OR ELECTRONICALLY BY AN EQUIPMENT VENDOR PRIOR TO PURCHASE OF EQUIPMENT, CORING PIPE PENETRATIONS OR ROUTING MECHANICAL EQUIPMENT TO CONFIRM THERE ARE NO CONFLICTS AND MECHANICAL EQUIPMENT WILL FIT IN THE ALLOCATED SPACE.
12. PROVIDE A COMPLETE AND FUNCTIONAL SYSTEM AS SHOWN ON THE DRAWINGS AND AS OUTLINED IN THE SPECIFICATIONS. THE DETERMINATION OF COMPLETE AND FUNCTIONAL SHALL BE AT THE SOLE DISCRETION OF THE ENGINEER. THE ENGINEER SHALL MAKE THIS DETERMINATION IN THE FIELD BASED ON ACTUAL FIELD CONDITIONS.
13. MATERIALS AND WORKMANSHIP FURNISHED UNDER THIS CONTRACT SHALL BE A STANDARD, HIGH–GRADE QUALITY, AND OF THE BEST WORKMANSHIP AND DESIGN. ALL LIKE PARTS OF EQUIPMENT OF THE SAME SIZE OR CAPACITY SHALL BE INTERCHANGEABLE. SUITABLE PROVISION SHALL BE MADE FOR EASY ADJUSTMENT OR REPLACEMENT OF ALL PARTS REQUIRING ADJUSTMENT OR REPLACEMENT.
14. IT IS NOT THE INTENT OF THESE DRAWINGS TO PORTRAY EVERY DETAIL OF THE REQUIRED WORK. PROVIDE THE EQUIPMENT AND SYSTEMS COMPLETE SO THAT WHEN ASSEMBLED AND INSTALLED THEY SHALL OPERATE AND PERFORM AS DESCRIBED HEREIN.
15. ALL MECHANICAL AND ELECTRICAL LAYOUTS ARE GENERALLY DIAGRAMMATIC AS SHOWN ON THESE DRAWINGS. THE WORK OF THE VARIOUS TRADES SHALL BE COORDINATED TO AVOID INTERFERENCE AND TO SECURE MAXIMUM HEAD ROOM. PARTICULAR ATTENTION IS DRAWN TO CONGESTED SPACES INSIDE AND OUTSIDE OF THE STRUCTURES. IN THE INTEREST OF COORDINATION AND EXPEDIENCY, IT BECOMES NECESSARY TO DEVELOP "INTERFERENCE DRAWINGS" (DEFINED AS DRAWINGS EMBODYING THE WORK OF TRADES INVOLVED, ILLUSTRATING DETAILS OR CONSTRUCTION PROPOSED AND ARRANGEMENT OF ACTUAL EQUIPMENT AND APPARATUS PURCHASED). SUCH DRAWINGS SHALL BE PREPARED AND SHALL BE COORDINATED WITH OTHER TRADES.
16. THE INSTALLATION OF FACILITIES AND APPURTENANT WORK SHALL BE PROVIDED IN ACCORDANCE WITH THE REQUIREMENTS OF ALL FEDERAL, STATE, AND MUNICIPAL CODES AND REGULATIONS GOVERNING THE WORK. IN INSTANCES WHERE THE REQUIREMENT OF DRAWINGS AND SPECIFICATIONS ARE IN EXCESS OF THE REQUIREMENTS OF THE APPLICABLE CODES AND REGULATIONS, AND ARE PERMITTED THEREUNDER, THEN THE REQUIREMENTS OF THE CONTRACT DOCUMENTS SHALL GOVERN.
17. ALL EQUIPMENT DRIVEN BY OPEN SHAFTS, BELTS, CHAINS, OR GEARS SHALL BE PROVIDED WITH APPROVED ALL–METAL GUARDS ENCLOSING THE DRIVE MECHANISM AND MOVING PARTS. GUARDS SHALL BE CONSTRUCTED OF GALVANIZED SHEET STEEL OR GALVANIZED ONE–INCH MESH SCREEN (WOVEN WIRE OR EXPANDED METAL) SET IN A FRAME OF GALVANIZED STEEL MEMBERS, UNLESS OTHERWISE DESCRIBED IN THE TECHNICAL SPECIFICATIONS FOR THE PARTICULAR EQUIPMENT. GUARDS SHALL BE SECURED IN POSITION BY STEEL BRACES OR STRAPS WHICH WILL PERMIT EASY REMOVAL FOR SERVICING OF THE THE EQUIPMENT. WHERE SAFETY CODES OR REGULATIONS ARE APPLICABLE, THE GUARDS SHALL CONFORM THERETO IN ALL RESPECTS.
18. ENSURE THAT ALL GREASE FITTINGS ON ALL PIECES OF EQUIPMENT FURNISHED UNDER THIS CONTRACT ARE STANDARDIZED SO THAT ONLY THE ALEMITE BUTTON–HEAD TYPE OF FITTING IS USED. FITTINGS SHALL BE STANDARD OR GIANT SIZE ACCORDING TO THE TYPE OF SERVICE PERFORMED.
19. UNLESS OTHERWISE SPECIFIED, NEAT BRASS PLATE, OR OTHERWISE SUITABLE MATERIAL, HAVING SERIAL NUMBER, THE MAKE, HORSEPOWER, CAPACITY, SPEED, AND OTHER PERTINENT DATA, AND ANY IMPORTANT OPERATING OR MAINTENANCE INSTRUCTIONS, PERMANENTLY AND CLEARLY MARKED ON THE PLATE, SHALL BE MOUNTED ON EACH ITEM OF EQUIPMENT. ALL IMPORTANT PARTS OF EQUIPMENT SHALL BE STAMPED FOR IDENTIFICATION AND LOCATION.
20. ALL NECESSARY ANCHOR BOLTS, NUTS, WASHERS, SETTING TEMPLATES, AND SUCH OTHER PARTS SHALL BE PROVIDED AS REQUIRED FOR THE PROPER INSTALLATION OF THE WORK, AND WHEREVER PRACTICABLE, THEY SHALL BE BUILT IN AS THE WORK PROGRESSES. THE PARTS SHALL BE OF THE MATERIALS SPECIFIED, AND WHERE NOT SPECIFIED OR INDICATED, THEY SHALL BE OF APPROVED TYPES AND MATERIALS FOR EACH APPLICATION. THE SETTING OF ANCHOR BOLTS BY DRILLING AND GROUTING WILL NOT BE PERMITTED.
21. ALL EQUIPMENT SHALL BE INSTALLED IN STRICT CONFORMANCE WITH THE RECOMMENDATIONS OF THE MANUFACTURER, AS APPROVED, TRULY LEVEL AND PLUMB, AND SHALL BE PROVIDED COMPLETE WITH ALL NECESSARY PIPING, FITTINGS, VALVES, CONTROLS, WIRING, AND APPURTENANCES AND ACCESSORIES SO THE EQUIPMENT WILL BE LEFT COMPLETE AND IN SATISFACTORY OPERATING CONDITION. PARTICULAR CARE SHALL BE TAKEN IN THE INSTALLATION OF PUMPS IN ORDER TO PREVENT A STRAIN OF THE PIPING OR PUMP FLANGES AND SHALL INSURE THE CORRECT ALIGNMENT OF SHAFTS, COUPLINGS, AND BEARINGS.
22. SPECIAL CARE SHALL BE TAKEN TO ENSURE PROPER ALIGNMENT OF ALL EQUIPMENT. EQUIPMENT SHALL BE LASER ALIGNED BY A CERTIFIED PROFESSIONAL. THE BED PLATES OR SKIDS SHALL BE FURTHER CHECKED AFTER SECURING TO THE FOUNDATIONS AND AFTER CONFIRMATION OF ALL ALIGNMENTS, THE SOLE PLATES SHALL BE FINALLY GROUTED IN PLACE. THE CONTRACTOR SHALL BE RESPONSIBLE FOR THE EXACT ALIGNMENT OF EQUIPMENT WITH ASSOCIATED PIPING.
23. ALL WEDGES, SHIMS, FILLING PIECES, KEYS, PACKING, GROUT, OR OTHER MATERIALS NECESSARY TO PROPERLY ALIGN, LEVEL, AND SECURE APPARATUS IN PLACE SHALL BE FURNISHED BY THE CONTRACTOR. ALL PARTS INTENDED TO BE PLUMB OR LEVEL MUST BE PROVEN EXACTLY SO. ANY GRINDING NECESSARY TO BRING PARTS TO PROPER BEARING AFTER ERECTION SHALL BE DONE.
24. WHERE CONNECTION OF THE NEW PIPING SYSTEMS TO EXISTING PIPING SYSTEMS IS REQUIRED, PROVIDE MISCELLANEOUS FITTINGS, FILLER FLANGES, COUPLINGS, ETC. AS MAY BE REQUIRED TO COMPLETE THE WORK, WHETHER SHOWN ON THE DRAWINGS OR NOT. FIELD VERITY ALL EXISTING PIPING DIMENSIONS.
25. ALL PIPING SYSTEMS AND EQUIPMENT SHALL BE ADEQUATELY AND SAFELY SUPPORTED. DESIGN, PROVIDE, AND INSTALL ALL SUPPORTS AS REQUIRED BY THE PIPING AND EQUIPMENT PROVIDED. AT A MINIMUM, ALL PIPING SYSTEMS SHALL BE SUPPORTED PER THE REQUIREMENTS OF MANUFACTURER'S STANDARDIZATION SOCIETY (MSS) SP–58 AND MSS SP–69. SUPPORT DESIGN SHALL ACCOMMODATE ALL STATIC AND OPERATIONAL CONDITIONS TO WHICH THE PIPING AND EQUIPMENT MAY BE SUBJECTED. SUPPORTS SHALL BE IN ADDITION TO THOSE SHOWN ON THE DRAWINGS.
26. FINAL LOCATION OF EQUIPMENT AND CONNECTION POINTS SHALL BE DETERMINED IN THE FIELD. ALL DIMENSIONS SHALL BE CONFIRMED AND CORRELATED AT THE JOB SITE.
27. INSTALL EQUIPMENT SO AS TO BE READILY ACCESSIBLE FOR OPERATION, MAINTENANCE, AND REPAIR. MINOR DEVIATIONS FROM THE DRAWINGS MAY BE MADE TO ACCOMPLISH THIS, BUT CHANGES WHICH INVOLVE EXTRA COST SHALL NOT BE MADE WITHOUT PRIOR APPROVAL.
28. OBTAIN AND PAY FOR ALL PERMITS AND INSPECTIONS REQUIRED FOR THE EXECUTION OF THE WORK AND OBTAIN NECESSARY APPROVALS FROM AUTHORITIES THAT HAVE JURISDICTION.
29. INFORMATION SHOWN ON SCHEMATICS AND DETAIL DRAWINGS BUT NOT SHOWN ON FLOOR PLANS, AND VICE VERSA, SHALL MUTUALLY APPLY. IT IS NOT INTENDED TO SHOW EVERY OFFSET, FITTING, OR COMPONENT; HOWEVER, PROVIDE A COMPLETE INSTALLATION AS NECESSARY.
30. PIPE COUPLINGS MAY OR MAY NOT BE SHOWN ON THE DRAWINGS. THE USE OF PIPE COUPLINGS SHALL BE AS REQUIRED UNLESS SPECIFICALLY DICTATED.
31. ALL VENT PIPING SHALL BE EQUIPPED WITH 316 S.S. INSECT SCREENS WITH FLANGES AT THE STRUCTURE PENETRATIONS.

PIPE SCHEDULE

SYMBOL	DESCRIPTION	LOCATION	MATERIAL	JOINT SYSTEM
S	SEWER	EXTERIOR	CLASS 51 DI	PUSH–ON/MJ
FM	FORCE MAIN	INTERIOR	CLASS 53 DI	FLANGED
		EXTERIOR	CLASS 51 DI	PUSH–ON/MJ
VENT	VENT	EXTERIOR	CLASS 51 DI	PUSH–ON/MJ

INTERIOR PIPE PAINTING SCHEDULE

SYMBOL	DESCRIPTION	PAINTING COLOR	PAINTING TEXT
DR	DRAIN	BLACK	DRAIN
FM	FORCEMAIN	GRAY	RAW WW
VENT	VENT	BROWN	VENT

INTERIOR PAINTING NOTES

1. ALL LETTERING SHALL BE CLEARLY LEGIBLE IN WHITE PAINT, A MINIMUM OF 2 INCHES IN HEIGHT UNLESS OTHERWISE NOTED OR SPECIFIED.
2. CONTRACTOR SHALL SUBMIT PAINTING SCHEME AND COLORS TO ENGINEER PRIOR TO ANY PAINTING OPERATIONS.
3. PAINTS CONTAINING LEAD OR MERCURY SHALL NOT BE PERMITTED.
4. ALL PROCESS PIPING SHALL BE PAINTED.

MISCELLANEOUS PROCESS ABBREVIATIONS

ø	DIAMETER
AIR	PROCESS AIR
ABR	AERATION BASIN RECYCLE
ALK	ALKALINITY
ALUM	ALUMINUM
WAG	ADJUSTABLE WEIR GATE (SELF–CONTAINED)
B	BLOWER
BF	BLIND FLANGE
BLDG	BUILDING
CU	COPPER
CB	CATCH BASIN
CI	CAST IRON
CO	CLEANOUT
CONC	CONCRETE
CONT	CONTINUED
CPL	COUPLING
DET	DETAIL
DIA	DIAMETER
DMH	DRAINAGE MANHOLE
DI	DUCTILE IRON
DN	DOWN
DR	DRAIN
ECC	ECCENTRIC
EFF	EFFLUENT (FINAL)
EL	ELEVATION
ELL	ELBOW
EQUIP	EQUIPMENT
EXP	EXPANSION
F	FIRE PROTECTION
FC	FLUSHING CONNECTION
FD	FLOOR DRAIN
FE	FINAL EFFLUENT
FIL	FILTRATE
FIT	FLOW INDICATING TRANSMITTER
FLG	FLANGE
FLR	FLOOR
FM	FORCEMAIN
FPHB	FROST PROOF HOSE BIBB
FRP	FIBERGLASS REINFORCE POLYESTER
FW	FIXED WEIR
GA	GAUGE
GALV	GALVANIZED
GR	GREASE
H	HEAT
HB	HOSE BIBB
HP	HIGH POINT
HYD	HYDRANT
HYP	HYPOCHLORITE
ID	INSIDE DIAMETER
IMLR	INTERNAL MIXED LIQUOR RECYCLE
INF	INFLUENT
INV	INVERT
JT	JOINT
KV	KNIFE GATE VALVE
LE	LEVEL ELEMENT
LIT	LEVEL INDICATING TRANSMITTER
LR	LONG RADIUS
MAX	MAXIMUM
MBR	MEMBRANE BIOLOGICAL REACTOR
MECH	MECHANICAL
METH	METHANOL
MFG	MANUFACTURER
MH	MANHOLE
MIN	MINIMUM
MJ	MECHANICAL JOINT
MTD	MOUNTED
MFT	MEMBRANE TANK FEED
MTR	MEMBRANE TANK RECIRCULATION
NaOH	SODIUM HYDROXIDE
NG	NATURAL GAS
NO	NUMBER
NPT	NATIONAL PIPE THREAD
NRE	NITROGEN REMOVAL EFFLUENT
OC	ON CENTER
OD	OUTSIDE DIAMETER
OH	OVERHEAD
PE	POLYETHYLENE
POV	PNEUMATICALLY OPERATED VALVE
PRI	PRIMARY
PRV	PRESSURE RELIEF VALVE OR PRESSURE REGULATING VALVE
PRW	PROCESS WATER
PSIG	POUNDS PER SQUARE INCH GAUGE
PTE	PRELIMINARY TREATMENT EFFLUENT
PVC	POLYVINYL CHLORIDE
PW	PLANT OR PROCESS WATER
RED	REDUCER
REQ'D	REQUIRED
S	SEWER
SAM	SAMPLER LINE CONDUIT
SBR	SEQUENCING BATCH REACTOR
SCH	SCHEDULE
SCSTG	ADJUSTABLE STOP GATE (SELF CONTAINED)
SECT	SECTION
SL	SLUDGE
SMH	SEWER MANHOLE
SP	SUMP PUMP
SPD	SUMP PUMP DISCHARGE
SS	STAINLESS STEEL
STD	STANDARD
STE	SECONDARY TREATMENT EFFLUENT
STG	STOP GATE
STL	STEEL
SW	SEAL WATER
THK	THICKNESS
TWAS	THICKENED WASTE SLUDGE
TYP	TYPICAL
VERT	VERTICAL
W	POTABLE WATER
WS	WASTE SLUDGE
WAS	WASTE SLUDGE
YH	YARD HYDRANT

PROCESS EQUIPMENT ABBREVIATIONS

P–# PUMP NO. X

CONSTRUCTION DOCUMENTS
12/11/15

Weston&Sampson®
273 Dividend Road, Rocky Hill, CT 06067
(860) 513-1473 (800) SAMPSON
www.westonandsampson.com

No.	Date	Dr.By	Ck.By	App.By	Description
					APPROVED

12-15-15
REGISTERED PROFESSIONAL ENGINEER DATE

TOWN OF GREENWICH – DEPARTMENT OF PUBLIC WORKS
RITCH AVENUE WEST, GREENWICH, CONNECTICUT
BYRAM PARK POOL REPLACEMENT
PROCESS/MECHANICAL
SCHEDULES AND ABBREVIATIONS

CADD NO.	SCALE:	CONTRACT:	JOB NO.	DR.BY	DSN.BY	CHK.BY	APP.BY
GREENWICH	NONE	–	2130336	L.E.C.	L.E.C.	J.S.P.	C.B.W.

M10.1

FILE NO.

SHEET – OF –

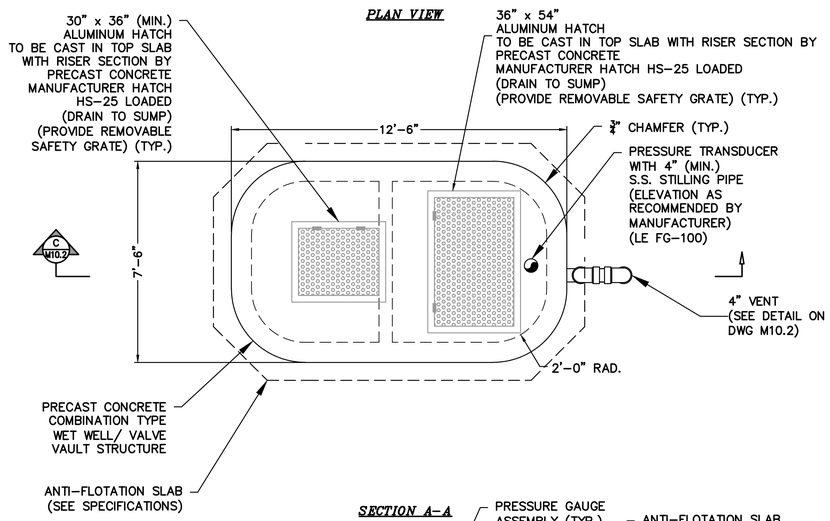

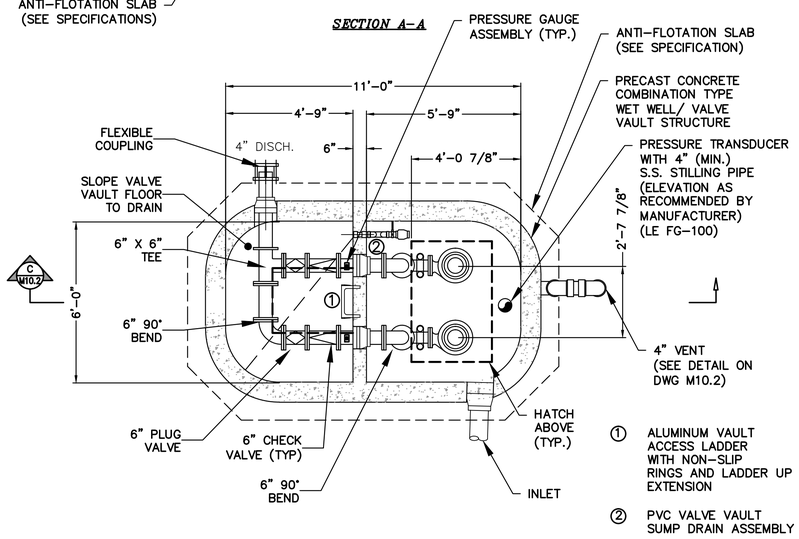

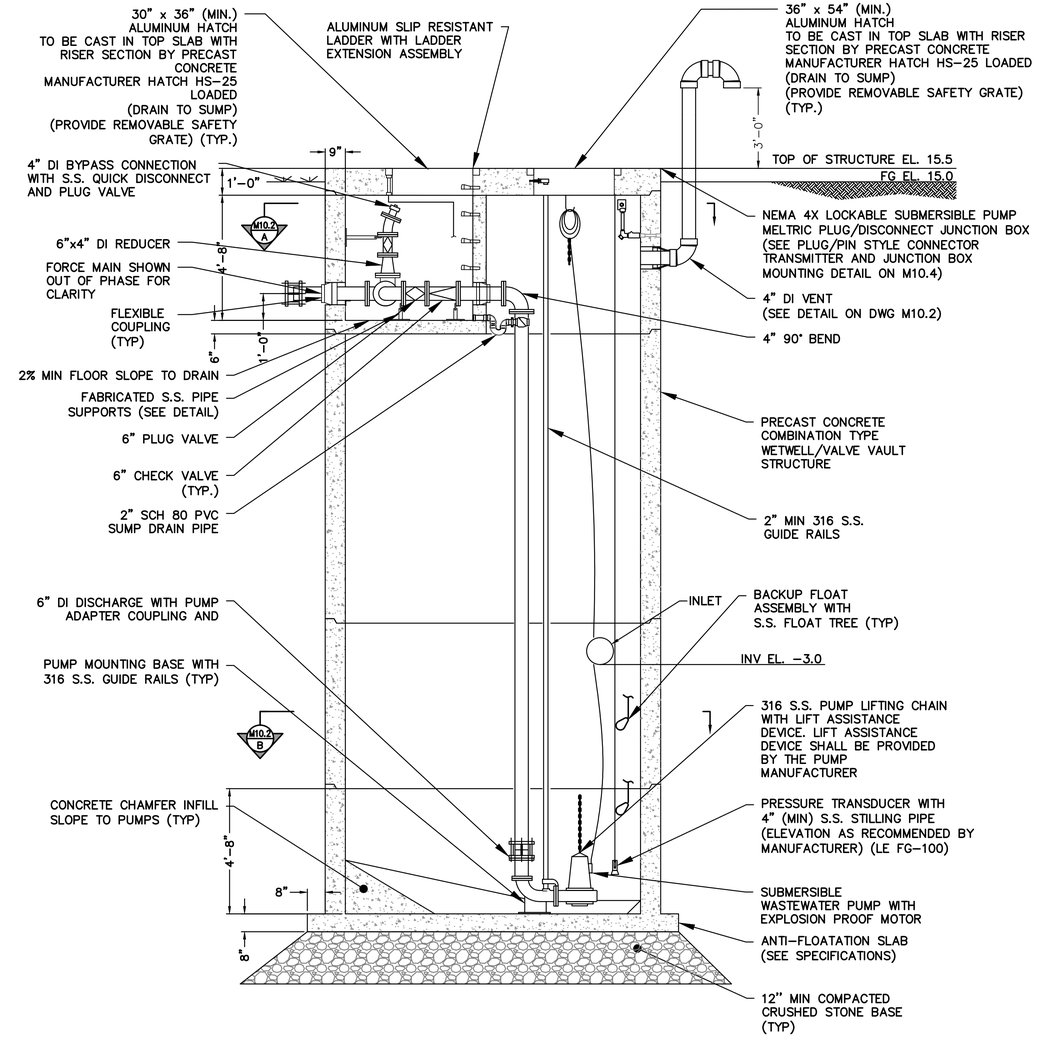

SECTION C-C
INTERIOR ELEVATION VIEW

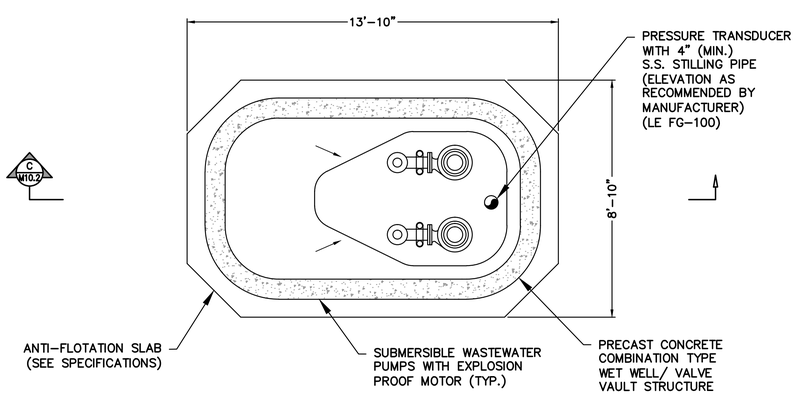

SECTION B-B

PUMP CONTROL LEVEL TABLE	
CONDITION	ELEVATION
LEAD PUMP ON	-5.50
LAG PUMP ON	-4.50
HIGH LEVEL ALARM	-3.50
LOW LEVEL ALARM	-9.00
LEAD PUMP OFF	-8.50
LAG PUMP OFF	-7.50

NOTE:

COORDINATE PUMP OFF AND LOW LEVEL ALARM ELEVATIONS WITH THE SUBMERSIBLE PUMP MANUFACTURER

CONSTRUCTION DOCUMENTS
12/11/15

Weston&Sampson®
273 Dividend Road, Rocky Hill, CT 06067
(860) 513-1473 (800) SAMPSON
www.westonandsampson.com

No.	Date	Dr.By	Ck.By	App.By	Description
		A	P	P	R O V E D

12-15-15
DATE
REGISTERED PROFESSIONAL ENGINEER

TOWN OF GREENWICH – DEPARTMENT OF PUBLIC WORKS
RITCH AVENUE WEST, GREENWICH, CONNECTICUT
BYRAM PARK POOL REPLACEMENT

PUMPING STATION PLAN AND PROFILE

CADD NO.	SCALE:	CONTRACT:	JOB NO.	DR.BY	DSN.BY	CHK.BY	APP.BY
GREENWICH	3/8"=1'-0"	–	2130336	L.E.C.	L.E.C.	J.S.P.	C.B.W.

M10.2
FILE NO.
SHEET – OF –

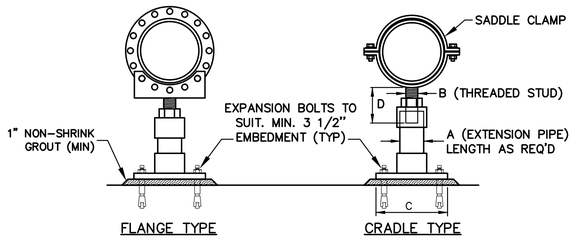

APPROXIMATE DIMENSIONS				
PIPE SIZE	A	B	C	D (MIN)
6"	2"	1"	4"x6"	6"
8"	2"	1"	4"x6"	6"
10"	2"	1"	4"x6"	6"
12"	2"	1"	4"x6"	6"

NOTES:
1. ALL COMPONENTS SHALL BE 316 STAINLESS STEEL.

ADJUSTABLE PIPE SUPPORT DETAIL
N.T.S.

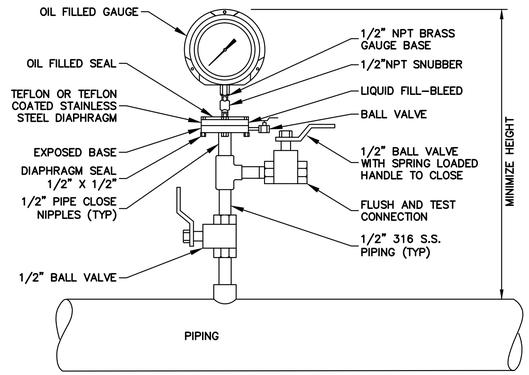

GAUGE ASSEMBLY
N.T.S.

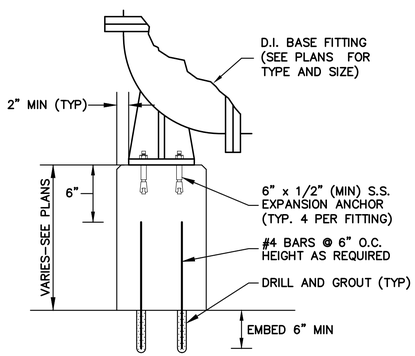

CONCRETE PEDESTAL DETAIL
N.T.S.

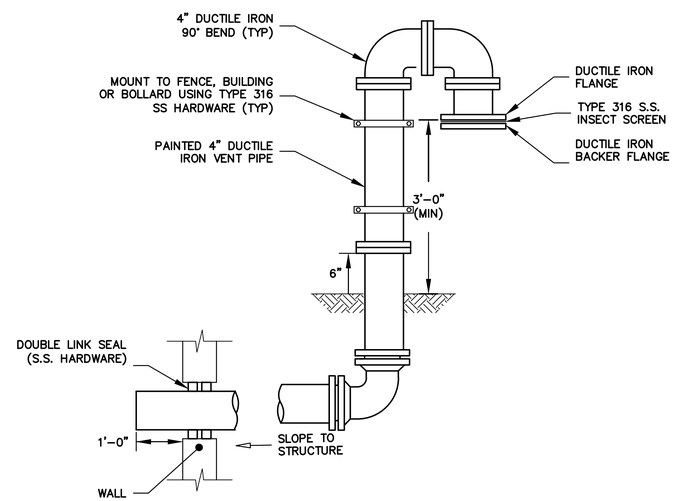

CONCRETE STRUCTURE DUCTILE IRON VENT DETAIL
N.T.S.

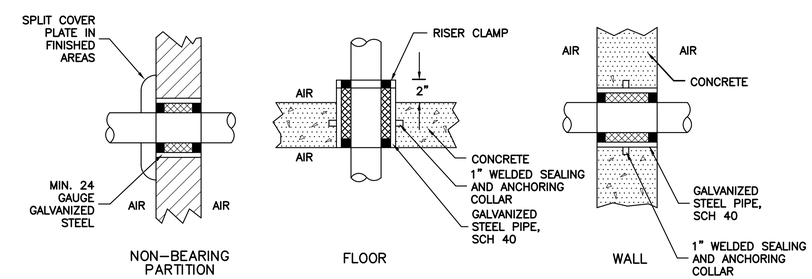

NOTES:
1. PROVIDE MINIMUM 1/4" ANNULAR SPACE BETWEEN SLEEVE AND PIPE, PACK WITH OAKUM AND SEAL ENDS WITH SEALANT PER SPECIFICATIONS.

PIPING SLEEVE DETAILS
N.T.S.

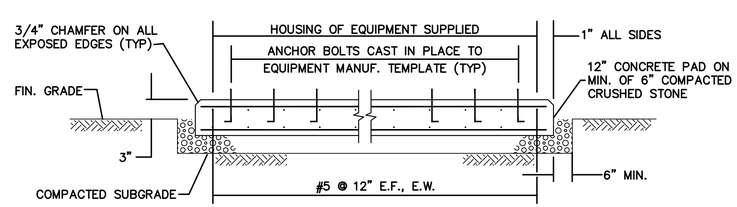

NOTE: COORDINATE ALL OPENINGS IN PAD WITH EQUIPMENT MANUFACTURER

EQUIPMENT PAD DETAIL
N.T.S.

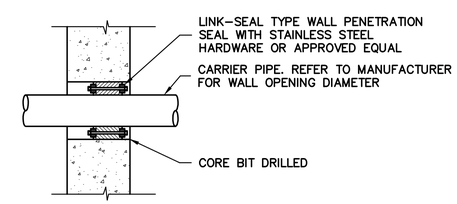

TYPICAL PIPE WALL PENETRATION DETAIL
N.T.S.

CONSTRUCTION DOCUMENTS
12/11/15

Weston&Sampson®
273 Dividend Road, Rocky Hill, CT 06067
(860) 513-1473 (800) SAMPSON
www.westonandsampson.com

No.	Date	Dr.By	Ck.By	App.By	Description
		A	P	P	R O V E D

12-15-15
REGISTERED PROFESSIONAL ENGINEER DATE

TOWN OF GREENWICH – DEPARTMENT OF PUBLIC WORKS
RITCH AVENUE WEST, GREENWICH, CONNECTICUT
BYRAM PARK POOL REPLACEMENT
MECHANICAL DETAILS

CADD NO.	SCALE:	CONTRACT:	JOB NO.	DR.BY	DSN.BY	CHK.BY	APP.BY
GREENWICH	NONE	–	2130336	L.E.C.	L.E.C.	J.S.P.	C.B.W.

M10.3
FILE NO.
SHEET – OF –

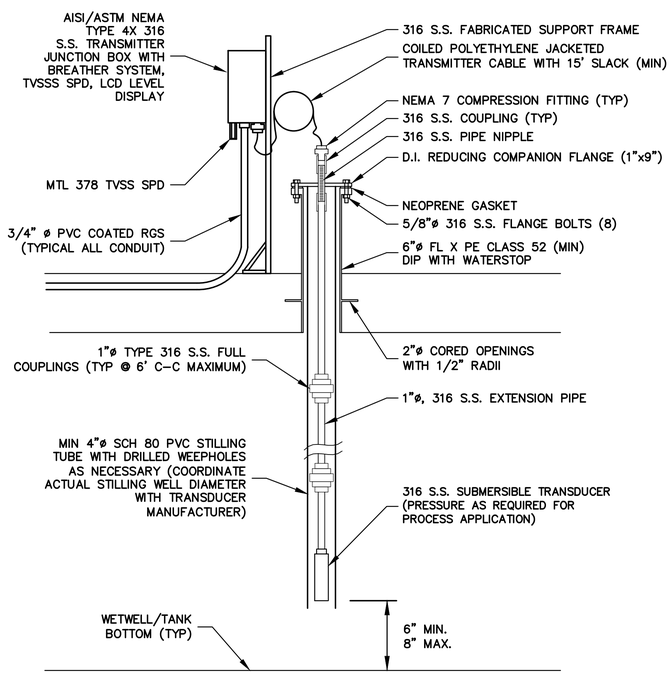

CLOSED-TANK SUBMERSIBLE TRANSMITTER TYPICAL MOUNTING DETAIL

N.T.S.

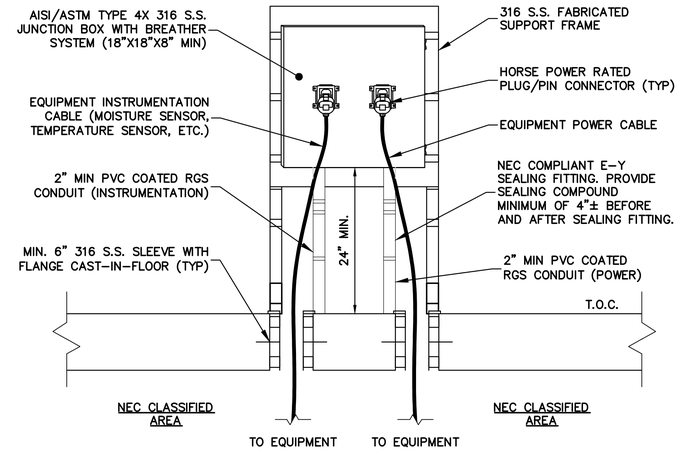

TYPICAL FRONT ANGLE

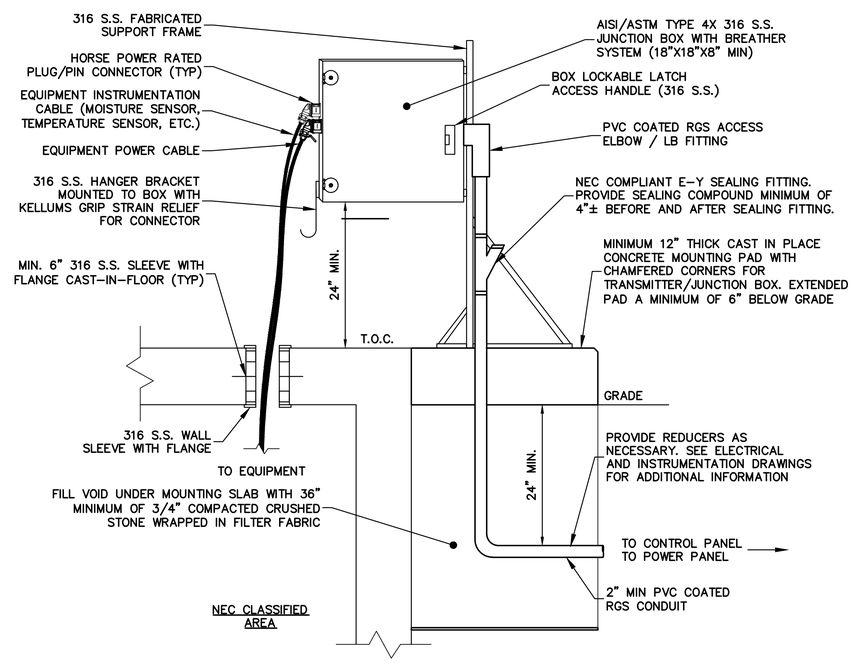

TYPICAL SIDE ANGLE

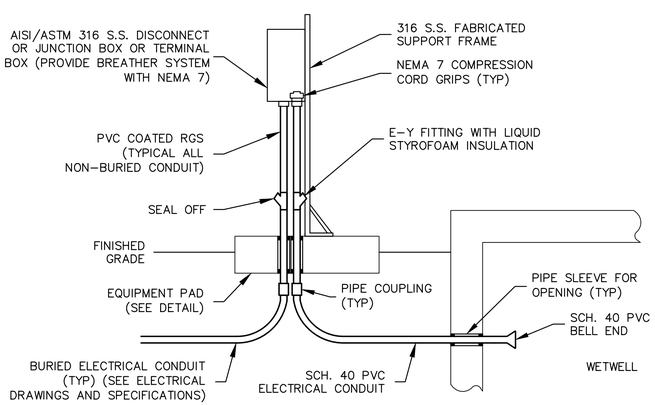

TYPICAL DISCONNECT OR JUNCTION BOX DETAIL

N.T.S.

NOTES:

1. THE CONTRACTOR SHALL PROVIDE A MINIMUM OF TWO PLUG/PIN CONNECTORS PER MOTOR ASSEMBLY. ONE DEDICATED PLUG/PIN CONNECTOR SHALL BE PROVIDED FOR THE EQUIPMENT POWER AND ONE FOR THE INSTRUMENTATION CABLES. POWER PLUG/PINS SHALL BE NEMA 4X AND HORSEPOWER RATED. ADDITIONAL HORSEPOWER RATED PLUG/PINS SHALL BE PROVIDED AT NO ADDITIONAL COST BASED ON THE ACTUAL MOTOR LOADS AND HORSEPOWER RATING REQUIREMENTS. THE CONTRACTOR SHALL COORDINATE THESE REQUIREMENTS WITH THE EQUIPMENT MANUFACTURER. PLUG/PIN CONNECTORS SHALL BE AS MANUFACTURED BY CROUSE-HINDS OR MELTRIC CORPORATION.
2. PLUG/PIN CONNECTORS ARE SHOWN MOUNTED TO THE FRONT OF THE JUNCTION BOX/TRANSMITTER ENCLOSURE FOR CLARITY OF THE DETAIL. THE PLUG/PIN CONNECTORS SHALL BE INSTALLED ON THE BOTTOM OF THE JUNCTION BOX/TRANSMITTER ENCLOSURE SUCH THAT THE ENCLOSURE PROVIDES A DRIP EDGE/ MEANS OF WEATHER PROTECTION FOR THE PLUG/PIN CONNECTORS.
3. ALL COMPONENTS OF THE PLUG/PIN CONNECTORS SHALL BE NON-FUSED.
4. ALL EQUIPMENT UTILIZING PLUG/PIN CONNECTIONS SHALL BE PROVIDED WITH LOCKOUT/TAGOUT PROVISIONS ON THE SYSTEM CONTROL PANEL/STARTER REGARDLESS OF WHETHER OR NOT THE LOCKOUT/TAGOUT PROVISIONS ARE SPECIFIED.
5. THE CONTRACTOR SHALL COORDINATE THE EQUIPMENT CABLE AND CABLE PIN QUANTITY REQUIREMENTS WITH THE APPROVED EQUIPMENT. THE CONTRACTOR SHALL PROVIDE PLUGS/PINS WITH ADDITIONAL PINS AS NECESSARY AND AT NO ADDITIONAL COST TO THE OWNER BASED ON THE QUANTITY OF PINS REQUIRED BY THE EQUIPMENT MANUFACTURER.
6. FOR SUBMERSIBLE PUMPING APPLICATIONS THE CONTRACTOR SHALL PROVIDE ONE JUNCTION BOX/TRANSMITTER WITH ALL OF THE PLUG/PIN RECEPTACLES PROVIDED ON THE BOX. THE CONTRACTOR SHALL UPSIZE THE MINIMUM JUNCTION BOX/TRANSMITTER SIZE AS REQUIRED AND AT NO ADDITIONAL COST.

PLUG/PIN STYLE CONNECTOR TRANSMITTER AND JUNCTION BOX MOUNTING DETAIL

N.T.S.

CONSTRUCTION DOCUMENTS
12/11/15

Weston&Sampson®
273 Dividend Road, Rocky Hill, CT 06067
(860) 513-1473 (800) SAMPSON
www.westonandsampson.com

No.	Date	Dr.By	Ck.By	App.By	Description

APPROVED

REGISTERED PROFESSIONAL ENGINEER — DATE 12-15-15

TOWN OF GREENWICH – DEPARTMENT OF PUBLIC WORKS
RITCH AVENUE WEST, GREENWICH, CONNECTICUT
BYRAM PARK POOL REPLACEMENT

MECHANICAL DETAILS

CADD NO.	SCALE:	CONTRACT:	JOB NO.	DR.BY	DSN.BY	CHK.BY	APP.BY
GREENWICH	NONE	–	2130336	L.E.C.	L.E.C.	J.S.P.	C.B.W.

M10.4

FILE NO.

SHEET – OF –

PIPING SYSTEMS

- CONDENSATION DRAIN
- PUMPED CONDENSATE
- REFRIGERANT LIQUID
- REFRIGERANT SUCTION
- REFRIGERANT HOT GAS
- VENT

PIPING SYMBOLS

- 2-WAY MODULATING PRESSURE INDEPENDENT ACV (PIACV)
- 2-WAY AUTOMATIC CONTROL VALVE (MODULATING)
- 2-WAY AUTOMATIC CONTROL VALVE (TWO POSITION)
- 3-WAY AUTOMATIC CONTROL VALVE (MODULATING)
- 3-WAY AUTOMATIC CONTROL VALVE (TWO POSITION)
- AUTOMATIC FLOW LIMITING VALVE (PRESSURE INDEPENDENT)
- GATE VALVE
- CHECK VALVE
- TRIPLE DUTY VALVE
- GLOBE VALVE
- BALL VALVE
- BALANCING VALVE
- COMBINATION BALANCING & SHUT-OFF VALVE
- PRESSURE REDUCING VALVE
- BUTTERFLY VALVE
- ANGLE VALVE
- RELIEF/SAFETY VALVE
- WEIGHTED LEVER VALVE
- DRAIN/HOSE BIBB
- AIR VENT
- STRAINER W/HOSE BIBB DRAIN
- FT — FLOAT & THERMOSTATIC TRAP
- BT — INVERTED BUCKET TRAP
- TEE-TURNED DOWN
- ELBOW-TURNED DOWN
- ELBOW-TURNED UP
- A — PIPE ANCHOR
- G — PIPE GUIDE
- FLEXIBLE PIPE CONNECTION
- REDUCER
- PIPE CAP
- UNION
- COMPANION FLANGE
- BLIND FLANGE
- FLOW MEASURING STATION
- FLOW VENTURI
- THERMOMETER
- GAUGES (PRESSURE)
- PRESSURE TAP
- H — HUMIDIFIER

CALLOUT SYMBOLS

- T — THERMOSTAT (TEMPERATURE SENSOR)
- S — OCCUPANCY SENSOR
- H — HUMIDISTAT (HUMIDITY SENSOR)
- CO2 — CARBON DIOXIDE (CO2) SENSOR
- CO — CARBON MONOXIDE (CO) SENSOR
- CONNECT NEW TO EXISTING
- LIMIT OF REMOVAL
- SD — SMOKE DETECTOR

MOTORIZED EQUIPMENT (EF, AHU, ETC)
UPPER - EQUIPMENT DESIGNATION
LOWER - EQUIPMENT NUMBER

MOTORIZED EQUIPMENT (FPT)
UPPER - EQUIPMENT DESIGNATION
MIDDLE - MAX CFM or MBH
LOWER - MIN CFM or GPM

NON-MOTORIZED EQUIPMENT (ET, AS, ETC)
UPPER - EQUIPMENT DESIGNATION
LOWER - EQUIPMENT NUMBER

NON-MOTORIZED EQUIPMENT (VAV, EXV)
UPPER - EQUIPMENT DESIGNATION
MIDDLE - MAX CFM or MBH
LOWER - MIN CFM or GPM

UPPER - SECTION DESIGNATION
LOWER - DRAWING NUMBER

UPPER - RISER IDENTIFICATION
LOWER - RISER NUMBER

- U — UNDERCUT DOOR
- L — LOUVERED DOOR

ABBREVIATIONS

ACD	AUTOMATIC CONTROL DAMPER
ACV	AUTOMATIC CONTROL VALVE
AD	ACCESS DOOR
AFF	ABOVE FINISHED FLOOR
AP	ACCESS PANEL
ATC	AUTOMATIC TEMPERATURE CONTROL
CFM	CUBIC FEET PER MINUTE
CO	CLEAN OUT
DB	DRY BULB
DX	DIRECT EXPANSION
EAT	ENTERING AIR TEMPERATURE
ETC	ETCETERA
ETR	EXISTING TO REMAIN
EWT	ENTERING WATER TEMPERATURE
EXH	EXHAUST
FLA	FULL LOAD AMPS
FD	FIRE DAMPER
FSD	COMBINATION FIRE DAMPER/SMOKE DAMPER
FPM	FEET PER MINUTE
GPH	GALLONS PER HOUR
GPM	GALLONS PER MINUTE
HP	HORSEPOWER
HPR	HIGH PRESSURE STEAM CONDENSATE RETURN
HPS	HIGH PRESSURE STEAM SUPPLY
LAT	LEAVING AIR TEMPERATURE
LBS/HR	POUNDS PER HOUR
LPR	LOW PRESSURE STEAM CONDENSATE RETURN
LPS	LOW PRESSURE STEAM SUPPLY
LRA	LOCK ROTOR AMPS
LWT	LEAVING WATER TEMPERATURE
MAX	MAXIMUM
MBH	THOUSAND BTU PER HOUR
MD	MOTORIZED DAMPER
MIN	MINIMUM
MPR	MEDIUM PRESSURE STEAM RETURN
MPS	MEDIUM PRESSURE STEAM SUPPLY
NC	NORMALLY CLOSED
NIC	NOT IN CONTRACT
NO	NORMALLY OPEN
OA	OUTSIDE AIR
OBD	OPPOSED BLADE DAMPER
OED	OPEN END DRAIN
PIACV	PRESSURE INDEPENDENT AUTOMATIC CONTROL VALVE
PD	PRESSURE DROP
PE	PNEUMATIC ELECTRIC SWITCH
PRV	PRESSURE REDUCING VALVE
RA	RETURN AIR
RH	RELATIVE HUMIDITY
RPM	REVOLUTIONS PER MINUTE
SMD	SMOKE DAMPER
SD	SMOKE DETECTOR
SP	STATIC PRESSURE (INCHES OF WATER)
SPD	SPLITTER DAMPER
VD	VOLUME DAMPER
WC	WATER COLUMN
WB	WET BULB TEMPERATURE °F
WMS	WIRE MESH SCREEN
X	EXISTING TO BE REMOVED
XTR	EXISTING TO REMAIN
XR	EXISTING TO BE RELOCATED
XRN	RELOCATED EQUIPMENT IN NEW LOCATION

DUCTWORK SYMBOLS

- 14 x 6 — RECTANGULAR DUCT
- 24 x 12 — FLAT OVAL DUCT
- 12"Ø — ROUND DUCT
- 24 / 12 — DUCT SECTION - SUPPLY
- 24 / 12 — DUCT SECTION - RETURN
- 12" Ø — ROUND DUCT WITH SIZE
- 12 / 48 — FLAT OVAL DUCT WITH SIZE
- DUCT TURNING UP
- DUCT TURNING DOWN
- VOLUME EXTRACTOR
- SPLITTER DAMPER
- DN — DUCT DROP IN RESPECT TO AIR FLOW
- UP — DUCT RISE IN RESPECT TO AIR FLOW
- FLEXIBLE DUCT CONNECTION
- DIFFUSER
- RETURN/EXHAUST OUTLET
- DIFFUSER WITH FLEX DUCT
- RETURN/EXHAUST OUTLET
- ACOUSTICAL DUCT LINING
- SOUND ATTENUATOR
- EXISTING DUCT TO REMAIN
- EXISTING DUCT TO BE REMOVED
- FD — FIRE DAMPER
- SD — SMOKE DAMPER
- FSD — COMBINATION FIRE/SMOKE DAMPER
- VD — VOLUME DAMPER
- MD — MOTORIZED DAMPER
- ACD — AUTOMATIC CONTROL DAMPER
- TRANSFER DUCT

GENERAL NOTES

1. THE HVAC CONTRACTOR SHALL BE FAMILIAR WITH ALL CONTRACT DOCUMENTS FOR ALL TRADES AND COORDINATE WITH OTHER CONTRACTORS.
2. THE DRAWINGS ARE DIAGRAMMATIC ONLY; FINAL ROUTING OF DUCTWORK, PIPING AND EQUIPMENT LOCATIONS SHALL BE DETERMINED IN THE FIELD. PROVIDE ALL ADDITIONAL OFFSETS, ELBOWS, ETC., AT NO ADDITIONAL COST TO THE OWNER.
3. CONSTRUCT AND INSTALL ALL DUCTWORK IN ACCORDANCE WITH THE LATEST EDITION OF SMACNA STANDARDS.
4. PROVIDE VOLUME DAMPERS AT ALL LOW PRESSURE SUPPLY, RETURN AND EXHAUST DUCTWORK BRANCH TAKE-OFFS.
5. MINIMUM SIZE OF CONDENSATE DRAIN PIPING SHALL BE 3/4" UNLESS OTHERWISE NOTED.
6. COORDINATE ALL ELECTRICAL AND PLUMBING REQUIREMENTS WITH THE ELECTRICAL AND PLUMBING CONTRACTORS.
7. REFER TO ARCHITECTURAL REFLECTED CEILING PLAN FOR FINAL LOCATIONS OF DIFFUSERS, REGISTERS AND GRILLES.
8. AUTOMATIC TEMPERATURE CONTROL (ATC) CONTRACTOR: COORDINATE THERMOSTAT LOCATIONS WITH THE ARCHITECTURAL FURNITURE PLANS. INSTALL ALL SENSORS AND FINISHED SPACE CONTROLS INCLUDING THERMOSTATS 54" ABOVE FINISHED FLOOR UNLESS OTHERWISE NOTED.
9. PROVIDE ALL INCIDENTAL ACCESSORIES NECESSARY TO MAKE THE HVAC WORK COMPLETE AND READY FOR OPERATION.
10. PROVIDE (FURNISH AND INSTALL) ALL HVAC WORK SHALL BE IN ACCORDANCE WITH APPLICABLE FEDERAL, STATE AND LOCAL CODES.
11. INSTALL ALL HVAC EQUIPMENT IN ACCORDANCE WITH THE MANUFACTURER'S RECOMMENDATIONS.
12. PROVIDE FIRE DAMPERS AND ACCESS PANELS AT ALL FIRE RATED ASSEMBLIES AND FLOOR PENETRATIONS. REFER TO ARCHITECTURAL DRAWINGS FOR ASSEMBLY LOCATIONS.
13. PROVIDE FIRE DAMPERS AT ALL TRANSFER DUCTS IN FIRE RATED PARTITIONS.
14. PROVIDE ISOLATION VALVES IN SUPPLY AND RETURN PIPING ON EACH FLOOR, AND IN BRANCH PIPING SERVING MORE THAN ONE PIECE OF EQUIPMENT.
15. FURNISH TO THE GENERAL CONTRACTOR ALL INFORMATION REQUIRED FOR SETTING OF WALL, ROOF AND PARTITION OPENINGS FOR HVAC WORK. THIS INFORMATION SHALL BE FURNISHED IN A TIMELY MANNER SUCH THAT CONSTRUCTION SCHEDULE IS NOT JEOPARDIZED.
16. FIELD MEASURE THE EXACT SIZES AND VERIFY ALL OPENINGS FOR SHAFTS AND LOUVERS PRIOR TO SUBMISSION OF SHOP DRAWINGS AND INSTALLATION.
17. MINIMAL CONTROL POWER HAS BEEN IDENTIFIED ON THE DRAWINGS. IF ANY ADDITIONAL POWER IS REQUIRED BASED ON SYSTEMS DESIGN BY THE CONTROLS CONTRACTOR THE ATC/BAS CONTRACTOR SHALL BE RESPONSIBLE TO SUPPLY THAT POWER

CONSTRUCTION DOCUMENTS
12/11/15

COPYRIGHT 2015 WESTON & SAMPSON

Weston&Sampson®
273 Dividend Road, Rocky Hill, CT 06067
(860) 513-1473 (800) SAMPSON
www.westonandsampson.com

No.	Date	Description
A		
P		
O		
V		
E		
D		

Dr.By | Ck.By | App.By

12-16-2015
DATE

REGISTERED PROFESSIONAL ENGINEER

TOWN OF GREENWICH – DEPARTMENT OF PUBLIC WORKS
RITCH AVENUE WEST, GREENWICH, CONNECTICUT
BYRAM PARK POOL REPLACEMENT
HVAC LEGEND

DR. BY: KJP | DSN. BY: KJP | CHK. BY: SEH | APP. BY: SEH
JOB NO.: 2130336 | CONTRACT: – | SCALE: – | CADD NO.: –

H0.00

FILE NO.: –

SHEET – OF

Z:\CT-Rocky Hill-Projects\Greenwich CT\Greenwich Parks and Recreation\Byram Park\CAD\MEP\HVAC\H0.00 HVAC Legend.dwg

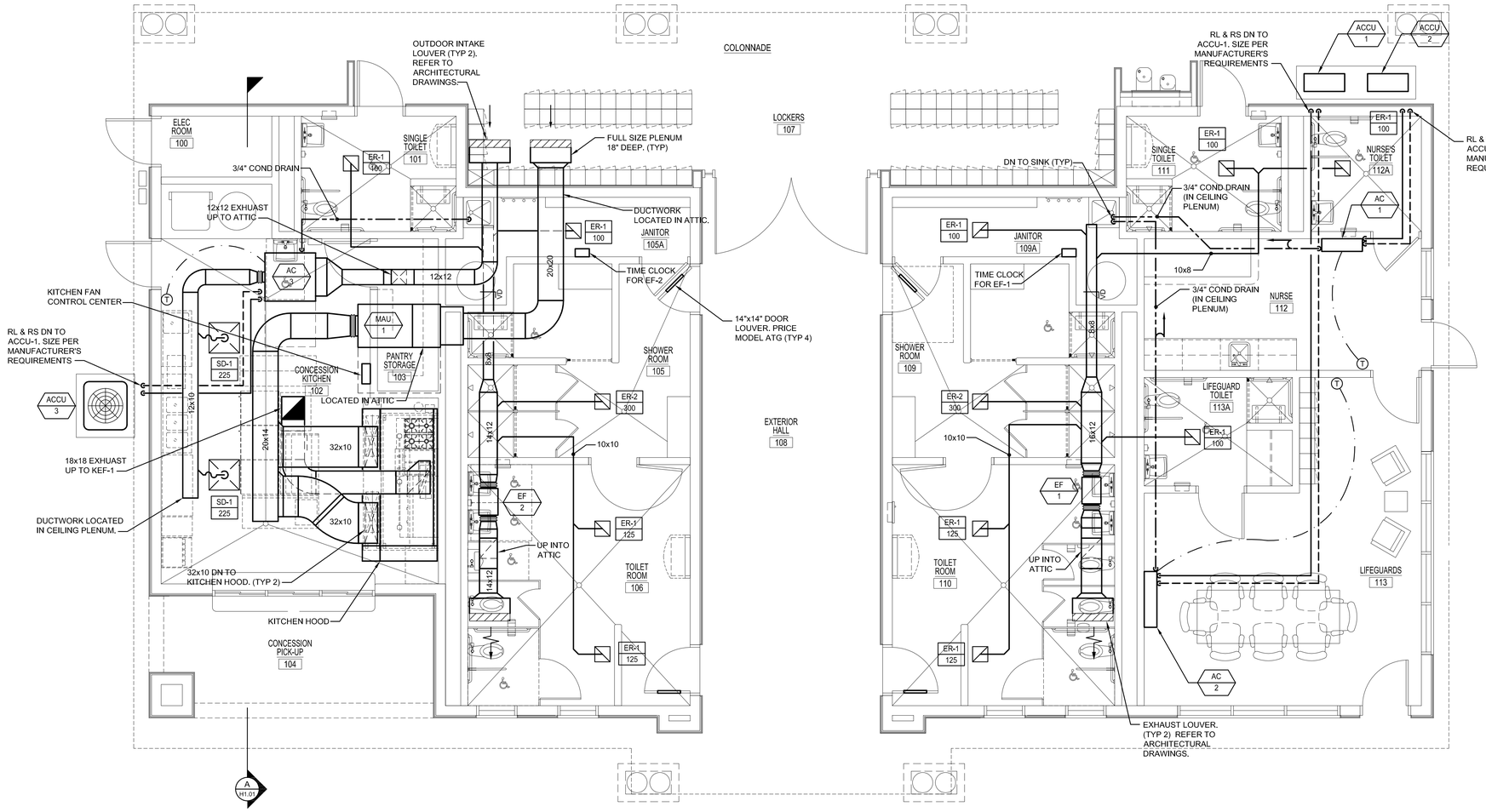

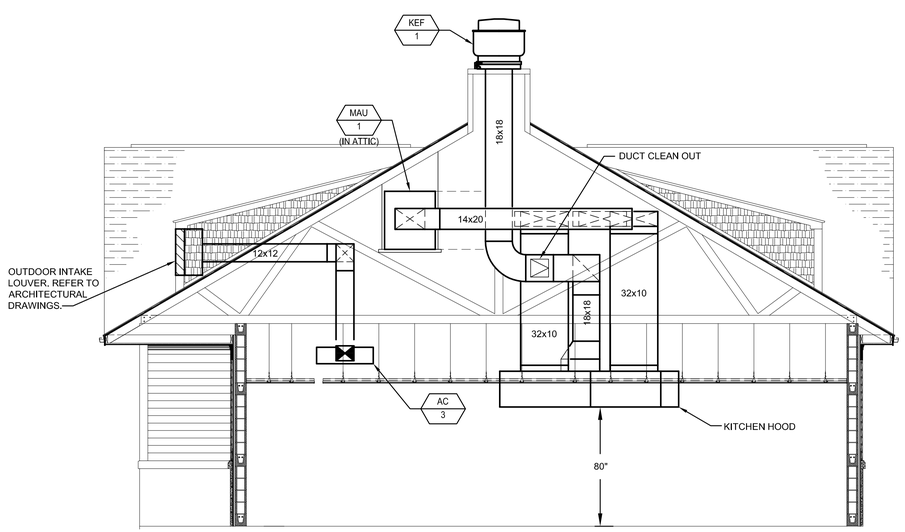

SECTION A-A

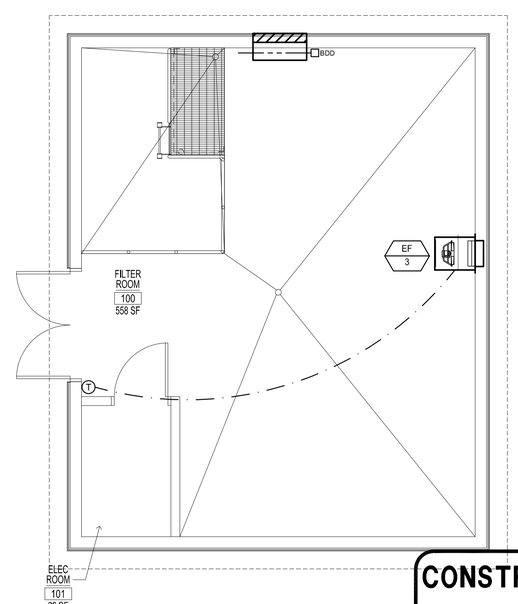

CONSTRUCTION DOCUMENTS
12/11/15

COPYRIGHT 2015 WESTON & SAMPSON

Z:\CT-Rockyhill-Projects\Greenwich CT\Greenwich Parks and Recreation\Byram Park\CAD\MEP\HVAC\H1.01 HVAC Floor Plan.dwg

Weston&Sampson®
273 Dividend Road, Rocky Hill, CT 06067
(860) 513-1473 (800) SAMPSON
www.westonandsampson.com

No.	Date	Dr.By	Ck.By	App.By	Description	DATE
		A P	O V E	D		12-16-2015

REGISTERED PROFESSIONAL ENGINEER

TOWN OF GREENWICH – DEPARTMENT OF PUBLIC WORKS
RITCH AVENUE WEST, GREENWICH, CONNECTICUT
BYRAM PARK POOL REPLACEMENT

HVAC FLOOR PLAN

DR.BY	DSN.BY	CHK.BY	APP.BY
KJP	KJP	SEH	SEH

JOB NO.	CONTRACT:	SCALE:	CADD NO.	FILE NO.
21303.36	-	-		-

H1.01

SHEET — OF

MAKE-UP AIR UNIT SCHEDULE

TAG	LOCATION	SERVICE	CFM		STATIC PRESS		FILTER DATA	MOTOR RPM	VFD	ELECTRICAL DATA						MODEL NUMBER	REMARKS
			TOTAL	MIN O.A.	ESP (IN)	TSP (IN)				MCA	MOP	HP	V	PH	HZ		
MAU-1	ATTIC	KITCHEN HOOD	2,160	2,160	.75	1	MERV 12	1725	NO	4.1	15	1.5	460	3	60	MSX-110-H12	1 & 2

NOTES:
1. SELECTIONS BASED ON GREENHECK.
2. PROVIDE WITH INLET DAMPER, PERMATECTOR COATING (GREY), HINGED ACCESS, CONTROL CENTER, DIRTY FILTER SWITCH, SMOKE DETECTOR, 2 NC/NO DRY CONTACTS, REMOTE KITCHEN FAN CONTROL CENTER AND SERVICE RECEPTACLE.

FAN

TAG	TYPE	SERVICE	CFM	S.P. (IN WC)	WHEEL			FAN RPM	MOTOR RPM	ECM	ELECTRICAL DATA					MODEL NUMBER	REMARKS
					DIA (IN)	TYPE	DRIVE				HP	FLA	V	PH	HZ		
EF-1	INLINE	RESTROOMS	950	.75	-	BI	DIRECT	2,041	2,200	YES	.75	11.3	115	1	60	SQ-99-VG	1 & 2
EF-2	INLINE	RESTROOMS	825	.75	-	BI	DIRECT	2,041	2,200	YES	.75	11.3	115	1	60	SQ-99-VG	1 & 2
EF-3	PROP	FILTER ROOM	800	.25	-	BI	DIRECT	1,550	1,550	NO	1/8	-	115	1	60	SE1-12-432-D	1 & 4
KEF-1	CENT	KITCHEN HOOD	2,700	1	-	BI	BELT	995	1,725	NO	1	2.1	460	3	60	USGF-180-10	1 & 3

NOTES:
1. SELECTIONS BASED ON GREENHECK
2. PROVIDE WITH PERMATECTOR COATING (GREY), GRAVITY BACKDRAFT DAMPER AND ECM MOTOR (W/0-10 VDC INPUT).
3. PROVIDE WITH PREMIUM EFFICIENT MOTOR, UL 762 LISTED FAN, HINGED BASE, NON-STICK WHEEL, S. S. FASTENERS & S. S. SHAFT AND EXTENDED LUBE LINES
4. PROVIDE WITH FLUSH EXTERIOR WALL HOUSING (W/ OSHA GAURD, PERMATECTOR COATING), WEATHERHOOD (45 DEG, W/BIRD SCREEN),

SPLIT SYSTEM HEAT PUMP SCHEDULE

INDOOR SECTION

TAG	LOCATION AND SERVICE	MODEL NUMBER	CFM	FAN MOTOR (HP)	COOLING (MBH)	HEATING (MBH)	ELECTRICAL		ROOM CONDITIONS	
							FLA	MCA	DB	RH
AC-1	LIFEGUARD	MSZ-FE18NA	470	-	18	21.6	.79	1	75	45%
AC-2	NURSE	MSZ-FE09NA	225	-	9	10.9	.76	1	75	45%

OUTDOOR SECTION

TAG	LOCATION AND SERVICE	MODEL NUMBER	AMB. (°F) COOLING/HEATING	ELECTRICAL						REMARKS
				V	PH	HZ	FLA	MCA	MOP	
ACCU-1	ON GRADE/(AC-1)	MUZ-FE18NA	95 / -13	208	1	60	.93	17.1	20	1 & 2
ACCU-2	ON GRADE/(AC-2)	MUZ-FE09NA	95 / -13	208	1	60	.56	12	15	1 & 2

NOTES:
1. SELECTIONS BASED ON MITSUBUSHI
2. PROVIDE WITH AIR OUTLET GUIDE, CONDENSATE PUMP AND WIRED WALL MOUNTED CONTROLLER.

AIR CONDITIONING UNITS

SYMBOL	SERVES	LOCATION	MAX CFM	ESP (IN WC)	FAN TYPE	NO. OF FANS	UNIT STYLE	HP	DX COIL DATA						ELECTRICAL			REFRIGERANT TYPE	MODEL	REMARKS
									TOTAL CLG (BTUH)	SENS CLG (BTUH)	EAT DB (°F)	EAT WB (°F)	LAT DB (°F)	LAT WB (°F)	V	PH	HZ			
AC-3	KITCHEN	ATTIC	450	.75	CENT	1	HORIZ.	1/3	19.2	12.6	80	67	53.7	52.9	460	3	60	R-410A	LFC-15-FC-4	1, 2 & 3

NOTES:
1. BASED ON GREENHECK
2. PROVIDE WITH PERMATECTOR COATING (GREY), CONTROL CENTER AND INLET DAMPER.
3. PROVIDE MODULES (IN DIRECTION OF AIRFLOW): INLET DAMPER, PREFILTER, DX COOLING COIL AND SUPPLY FAN (TOP HORIZONTAL DISCHARGE POSITION),.

AIR COOLED CONDENSING UNIT

SYMBOL	SERVES	LOCATION	O.A. AMB	TONS	COMPRESSOR				CONDENSER FAN			REFRIG. TYPE	ELECTRICAL			REMARKS
					QTY	RLA	MCA	MOP	QTY	HP	FLA		V	PH	HTZ	
ACCU-3	AC-3	GRADE	95°	2	1	13	18	20	1	1/8	0.74	R-410A	208	1	60	1 & 2

NOTES:
1. BASED ON TRANE
2. PROVIDE 2 STAGE SCROLL COMPRESSOR

GRILLE, REGISTERS & DIFFUSERS

SYMBOL	SIZE	MODEL	FUNCTION	MATERIAL	TYPE	FINISH	DAMPER	CFM RANGE	MAX NC	REMARKS
SD-1	9"x9"	AMX	SUPPLY	ALUMINUM	CEILING	PER ARCH	NONE	0 - 280	35	
ER-1	8"x8"	630	EXHAUST	ALUMINUM	CEIL/WALL	PER ARCH	NONE	0 - 200	25	
ER-2	10"x8"	630	EXHAUST	ALUMINUM	CEIL/WALL	PER ARCH	NONE	201 - 350	25	

CONSTRUCTION DOCUMENTS
12/11/15

COPYRIGHT 2015 WESTON & SAMPSON

Z:\CT-Rocky Hill-Projects\Greenwich CT\Greenwich Parks and Recreation\Byram Park\CAD\MEP\HVAC\H2.01 HVAC Schedule.dwg

Weston&Sampson®
273 Dividend Road, Rocky Hill, CT 06067
(860) 513-1473 (800) SAMPSON
www.westonandsampson.com

No.	Date	Dr.By	Ck.By	App.By	Description

REGISTERED PROFESSIONAL ENGINEER
DATE 12-16-2015

TOWN OF GREENWICH – DEPARTMENT OF PUBLIC WORKS
RITCH AVENUE WEST, GREENWICH, CONNECTICUT
BYRAM PARK POOL REPLACEMENT
HVAC SCHEDULES

CADD NO.	SCALE:	CONTRACT:	JOB NO.	DR BY	DSN BY	CHK BY	APP BY
-	-	-	2130336	KJP	KJP	SEH	SEH

H2.01
FILE NO. -
SHEET – OF

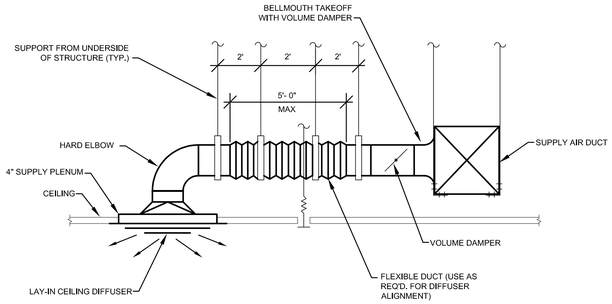

NOTES:

1. FLEXIBLE DUCT: MAXIMUM SAG 1/2" PER FOOT.

CEILING DIFFUSER BRANCH TAKE-OFF DETAIL NTS 1

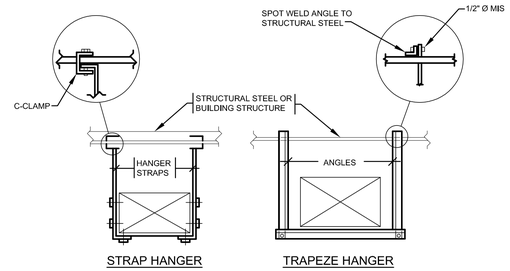

NOTES:
1. REFER TO OTHER DETAILS ON THIS DRAWING FOR HIGH VELOCITY DUCTWORK DETAILS AS REQUIRED.
2. FOR STRAP AND TRAPEZE HANGER SIZE, REFER TO SMACNA DUCT STANDARDS
3. NO POP RIVETS ALLOWED, USE SELF-TAPPING SHEET METAL SCREWS ONLY.

DUCT HANGER DETAIL (LOW VELOCITY) NTS 2

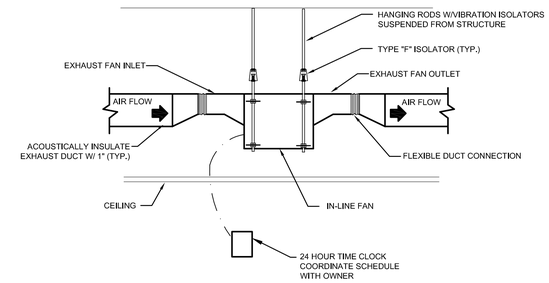

INLINE CABINET FAN DETAIL NTS 3

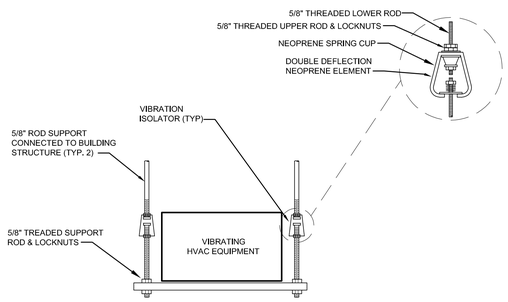

VIBRATION ISOLATOR DETAIL NTS 4

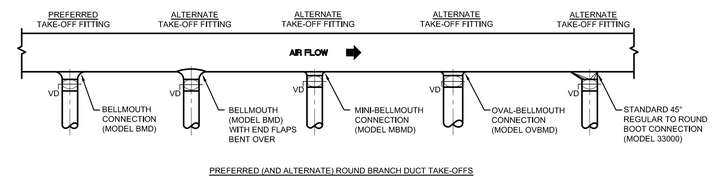

PREFERRED (AND ALTERNATE) ROUND BRANCH DUCT TAKE-OFFS

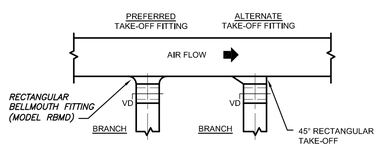

PREFERRED (AND ALTERNATE) RECTANGULAR BRANCH DUCT TAKE-OFFS

NOTES:

ALL ROUND AND RECTANGULAR BELL MOUTH FITTINGS SHALL BE INCLUDED WITH THE FOLLOWING STANDARD FEATURES:
1. NEOPRENE GASKET TO MINIMIZE AIR LEAKAGE
2. PRE-DRILLED HOLES FOR QUICK MOUNTING
3. CONSTRUCTED OF HEAVY DUTY GALVANIZED STEEL

OPTIONAL FEATURES SHALL INCLUDE THE FOLLOWING:
1. 26 GAUGE GALVANIZED QUADRANT VOLUME DAMPER WITH TIGHT FITTING GASKETING TO MINIMIZE LEAKAGE AT DAMPER PIVOT POINTS.
2. HEAVY DUTY HARDWARE IS AVAILABLE FOR APPLICATIONS WITH INCREASED STATIC PRESSURE.

BELLMOUTH CONNECTION DETAIL NTS 5

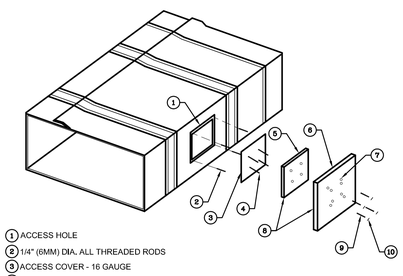

1. ACCESS HOLE
2. 1/4" (6MM) DIA. ALL THREADED RODS
3. ACCESS COVER - 16 GAUGE
4. INSULATION PINS - WELDED
5. FIRST LAYER 3M FIRE BARRIER DUCT WRAP 15A CUT SAME SIZE AS COVER
6. SECOND LAYER 3M FIRE BARRIER DUCT WRAP 15A WITH 1 IN. (25MM) OVERLAP ON ALL SIDES
7. SPEED CLIPS
8. ALUMINUM TAPE COVERING ALL EXPOSED EDGES
9. SPOOL PIECES FOR THREADED RODS
10. 1/4 IN. (6MM) DIAMETER WING NUTS

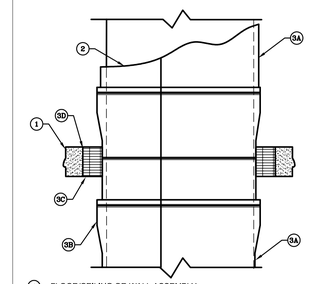

1. FLOOR/CEILING OR WALL ASSEMBLY
2. DUCT
3A. ONE LAYER 3M FIRE BARRIER DUCT WRAP 15A
3B. BANDING OR PINNINGE
3C. PACKING MATERIAL
3D. 3M FIRE BARRIER 1000 N/S, 1003 S/L OR 2000+ SILICONE SEALANT FOR WALL ASSEMBLY APPLY SEALANT TO BOTH SIDES OF WALL

FIRE RATED KITCHEN GREASE DUCT ACCESS DOOR NTS 6

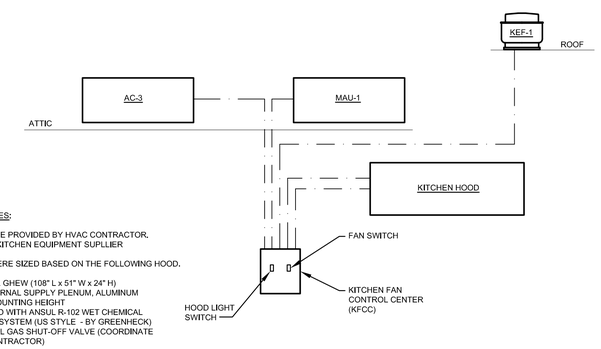

KITCHEN HOOD NOTES:

KITCHEN HOOD TO BE PROVIDED BY HVAC CONTRACTOR. COORDINATE WITH KITCHEN EQUIPMENT SUPLLIER

MAU-1 AND KEF-3 WERE SIZED BASED ON THE FOLLOWING HOOD.

GREENHECK MODEL GHEW (108" L x 51" W x 24" H)
PROVIDE WITH EXTERNAL SUPPLY PLENUM, ALUMINUM BAFFLES AND 80" MOUNTING HEIGHT
PROVIDE WITH HOOD WITH ANSUL R-102 WET CHEMICAL FIRE SUPPRESSION SYSTEM (US STYLE - BY GREENHECK)
INCLUDE ELECTRICAL GAS SHUT-OFF VALVE (COORDINATE WITH PLUMBING CONTRACTOR)

EXHAUST: 2250 CFM, .482 SP
SUPPLY: 990 CFM, .055 SP

ALL KITCHEN HOOD REQUIREMENTS SHOWN ARE FOR REFERENCE IN SIZING MAU-1 AND KEF-1. FINAL SIZES OF EQUIPMENT SHALL BE BASED ON FINAL HOOD REQUIREMENTS.
COORDINATE ALL ELECTRICAL REQUIREMENTS WITH ELECTRICAL CONTRACTOR

CONTROL NOTES:

1. PROVIDE GREENHECK KITCHEN FAN CONTROL CENTER. PROVIDE KFCC WITH SUPPLY AND EXHAUST FAILURE INDICATOR LIGHTS AND TWO EXTRA FIRE RELAYS.
2. INTERLOCK AC-3 TO RUN WHENEVER MAU-1/KEF-1 RUN AMN TO SHUTDOWN WHENEVER MAU-1/KEF-1 SHUT DOWN. WHEN AC-3 IS ON TEMPERATURE SHALL BE CONTROLLED BY WALL MOUNTED THERMOSTAT.

KITCHEN EXHAUST/MAKE-UP CONTROL NTS 7

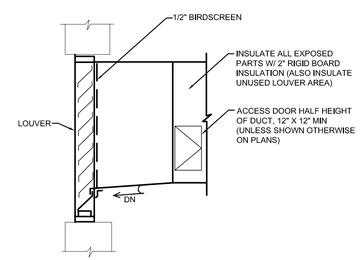

LOUVER DETAIL NTS 8

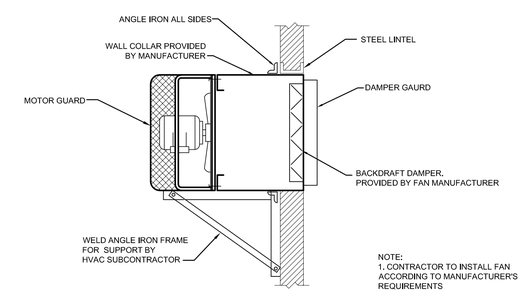

NOTE:
1. CONTRACTOR TO INSTALL FAN ACCORDING TO MANUFACTURER'S REQUIREMENTS

PROPELLER FAN DETAIL NTS 9

CONSTRUCTION DOCUMENTS
12/11/15

COPYRIGHT 2015 WESTON & SAMPSON

Weston&Sampson®
273 Dividend Road, Rocky Hill, CT 06067
(860) 513-1473
(800) SAMPSON
www.westonandsampson.com

No.	Date	Dr.By	Ck.By	App.By	Description
A		P	P	O	V E D

12-16-2015
DATE

REGISTERED PROFESSIONAL ENGINEER

TOWN OF GREENWICH – DEPARTMENT OF PUBLIC WORKS
RITCH AVENUE WEST, GREENWICH, CONNECTICUT
BYRAM PARK POOL REPLACEMENT
HVAC DETAILS

DR.BY	DSN.BY	CHK.BY	APP.BY
KJP	KJP	SEH	SEH

JOB NO. 2130336
CONTRACT: –
SCALE: –
CADD NO. –
FILE NO. –

H3.01

SHEET – OF

Z:\CT-Rockyhill-Projects\Greenwich CT\Greenwich Parks and Recreation\Byram Park\CAD\MEP\HVAC\H3.01 HVAC Details.dwg

LEGEND

SYMBOL	ABBREV	DESCRPTION
		TEE LOOKING UP
		TEE LOOKING DOWN
		UNION
	VIV	VALVE IN VERTICAL
	RPBP	REDUCED PRESSURE ZONE BACKFLOW PREVENTER
		STRAINER
	WHA/SA	WATER HAMMER ARRESTOR/SHOCK ABSORBER
		FLOW IN DIRECTION OF ARROW
		DIRECTION OF SLOPE
		PIPE SLEEVE
	FD	FLOOR DRAIN
	CO	CLEANOUT
	FCO	FLOOR CLEANOUT
		P-TRAP
		ELBOW UP OR RISE
		ELBOW DOWN OR DROP
		CAP OR END OF PIPE
HB	HB	HOSE BIBB
	CW	COLD WATER
	HW	HOT WATER
	HWR	HOT WATER RETURN
	S or W	SOIL OR WASTE ABOVE GROUND
	V	VENT ABOVE GROUND
KW	KW	KITCHEN WASTE
NCW	NCW	NON POTABLE COLD WATER
		BALL VALVE
		CHECK VALVE
	MV	MIXING VALVE
		BALANCING VALVE
	T&P	TEMPERATURE AND PRESSURE RELIEF VALVE
		VACUUM RELIEF VALVE
		AQUASTAT
		THERMOMETER
	PRV	PRESSURE REDUCING/REGULATING VALVE
	PG	PRESSURE GAUGE

ABBREVIATIONS

AFF	ABOVE FINISH FLOOR
AP	ACCESS PANEL
ARCH	ARCHITECT
BLDG	BUILDING
CFM	CUBIC FEET PER MINUTE
CLG	CEILING
CO	CLEANOUT
CONT	CONTINUATION
CP	CHROME PLATED
CW	COLD WATER
DF	DRINKING FOUNTAIN
DN	DOWN
DWG	DRAWING
ELEC	ELECTRICAL
ES	EMERGENCY SHOWER
EW	EMERGENCY EYE WASH
ES/EW	EMERGENCY SHOWER AND EYE WASH
EL/ELEV	ELEVATION
FCO	FLOOR CLEANOUT
FFE	FINISH FLOOR ELEVATION
FLR	FLOOR
FV	FLUSH VALVE
GC	GENERAL CONTRACTOR
GPC	GALLONS PER CYCLE
GPF	GALLONS PER FLUSH
GPM	GALLONS PER MINUTE
GWH	GAS PIPED WATER HEATER
GT	GREASE INTERCEPTOR
HW	HOT WATER
HWR	HOT WATER RETURN
INV	INVERT
IW	INDIRECT WASTE
LPC	LIMIT OF PLUMBING CONTRACTOR
MECH	MECHANICAL
MSB	MOP SERVICE BASIN-FIXTURE IDENTIFICATION
NTS	NOT TO SCALE
OED	OPEN END DRAIN
PC	PLUMBING CONTRACTOR
PLBG	PLUMBING
PSI	POUNDS PER SQUARE INCH
RPBP	REDUCED PRESSURE BACKFLOW PREVENTER
SA	SHOCK ABSORBER
SH	SHOWER-FIXTURE IDENTIFICATION
SK	SINK-FIXTURE IDENTIFICATION
SPEC	SPECIFICATION
TMW	TEMPERED WATER
TP	TRAP PRIMER
TW	TEMPERED WATER
TYP	TYPICAL
UR	URINAL
V	VENT
VIV	VALVE IN VERTICAL
VS	VENT STACK
VTR	VENT THRU ROOF
W	WASTE
WC	WATER CLOSET
WM	WASHING MACHINE
XTBR	EXISTING TO BE REMOVED
XTR	EXISTING TO REMAIN
XR	EXISTING TO BE RELOCATED
XN	RELOCATED EQUIPMENT IN NEW LOCATION

PLUMBING FIXTURE SCHEDULE

SYMBOL	FIXTURE					FITTING			TRAP	CARRIER/MOUNTING	FLOW RATE	REMARKS
		MANUFACTURER	MODEL	TYPE	SIZE	MANUFACTURER	TYPE	SUPPLY				
P-1	WATER CLOSET	TOTO	CT708E	WALL MOUNTED VITREOUS CHINA SIPHON JET HET WATER CLOSET 1.28gpf - ELONGATED BOWL	24-7/8" X 15-3/8"	TOTO ECOPOWER TET3LN31#SS	SENSOR ACTIVATED FLUSHOMETER 1.28 GPF	1-1/4"	INTEGRAL	JR SMITH OR EQUAL TO SUIT	1.28 GPF	ELONGATED BOWL LESS SEAT. CHURCH MODEL 1955FR REFER TO ARCHITECTURAL PLANS FOR ADA REQUIREMENTS
P-2	URINAL	TOTO	UT105UV	WALL MOUNTED VITREOUS CHINA SIPHON JET HET WATER CLOSET 1.28gpf - ELONGATED BOWL	14" DEEP RIM	TOTO ECOPOWER TEU3UN11#SS	SENSOR ACTIVATED FLUSHOMETER 0.125 GPF	3/4"	INTEGRAL	JR SMITH OR EQUAL TO SUIT	0.125 GPF	
P-3	LAVATORY	TOTO	LT308	WALL HUNG	20-1/2" X 27"	TOTO ECOPOWER TEL105-D10ET	SENSOR ACTIVATED FLUSHOMETER 0.09 GPC	1/2" CW 1/2" HW	1-1/2" CHROME PLATED BRASS P-TRAP W/C.O. PLUG FOR ADA INSULATION	JR SMITH OR EQUAL TO SUIT	0.09 GPC	TRAPS AND SUPPLIES TO BE INSULATED WITH TRUE-BRO PREFORMED INSULATION KIT
P-4	SHOWER	N/A	N/A	SHOWER WALLS AND FLOORS BY GC, PC TO PROVIDE 2" FD'A'	REFER TO ARCHITECTURAL DRAWINGS	KOHLER STANCE K-T14780-4	KOHLER K-304KS PRESSURE BALANCING MIXING VALVE 2.0 GPM FLOW RESTRICTOR	1/2" CW 1/2" HW	N/A	N/A	2 GPM	REFER TO ARCHITECTURAL DRAWINGS FOR MOUNTING HEIGHTS OF VALVE ASSEMBLY. FURNISH W/KOHLER AWAKEN B90 SHOWER HEAD W/7395 SHOWER ARM
P-5	ADA SHOWER	AQUARIUS	G-3698-BF-.50	MOLDED REINFORCED FIBERGLASS, FOLD UP SEAT, GRAB BARS, 1/2" THRESHOLD	36" X 36" INSIDE 39" X 39-1/2" OUTSIDE	KOHLER STANCE K-T14780-4	KOHLER K-304KS PRESSURE BALANCING MIXING VALVE 2.0 GPM FLOW RESTRICTOR	1/2" CW 1/2" HW	1-1/2"	N/A	2 GPM	REFER TO ARCHITECTURAL DRAWINGS FOR MOUNTING HEIGHTS OF VALVE ASSEMBLY. FURNISH W/KOHLER AWAKEN B110 PREMIUM HANDSHOWER
P-6	MOP BASIN	FIAT	MSB 2424	MOLDED-STONE, STAINLESS STEEL BUMPER GUARDS, STAINLESS STEEL SPLASH GUARD	24" X 24"	SPEAKMAN SC-5811-RCP	SERVICE SINK FAUCET, VACUUM BREAKER, PAIL HOOK, THREADED OUTLET	1/2" CW 1/2" HW	3"	N/A		
P-7	DRINKING FOUNTAIN	HALSEY TAYLOR	HTHB-OVLSER-1	BI-LEVEL ELECTRIC WATER COOLER WITH BOTTLE FILLER, OVAL BOWLS, PUSH BUTTON OPERATION	38" X 12"	N/A	N/A	1/2" CW	3"	TO SUIT	1.5 GPM	
P-8	NURSE'S OFFICE SINK	ELKAY	DLR151710	TOP MOUNT, 18 GAUGE SS, 3 HOLE, 4-INCH CENTERS, UNDERCOATED	1.5" X 17.5" X 10" DEEP	SPEAKMAN SC-3004-BO	CHROME, GOOSENECK SPOUT, WRISTBLADE HANDLES	1/2" CW 1/2" HW	3"	N/A	0.5 GPM	

KITCHEN EQUIPMENT*

ITEM NUMBER	DESCVRIPTION OF EQUIPMENT	SERVICES & CONNECTION SIZES						DRAINAGE CON. TYPE			REMARKS
		CW	140° HW	W	IW	G	CFH	AGRU	KW	SAN	
1	GREASE INTERCEPTOR	-	-	3"	-	-	-	X	-	-	STAINLESS STEEL CONSTRUCTION
2	3 BAY SINK	(2) 3/4"	(2) 3/4"	(3) 2"	-	-	-	X	-	-	CONNECTION TO ITEM #1
3	PREP SINK	1/2"	1/2"	-	2"	-	-	-	X	-	DRAIN TO FLOOR SINK
4	BEVERAGE DISPENSER	1/2"	-	-	-	-	-	-	X	-	DRAIN TO FLOOR SINK, PROVIDE WATTS SD-2 DUAL CHECK ON INLET
5	ICE MACHINE	1/2"	-	-	3/4"	-	-	-	X	-	DRAIN TO FLOOR SINK, WATER FILTER ON INLET
6	GRIDDLE	-	-	-	-	3/4"	108	-	-	-	GAS PRESSURE 4" TO 10" WC
7	RANGE	-	-	-	-	3/4"	143	-	-	-	GAS PRESSURE 4" TO 10" WC
8	FRYER	-	-	-	-	3/4"	150	-	-	-	GAS PRESSURE 4" TO 10" WC
9	HAND SINK	1/2"	1/2"	1 1/2"	-	-	-	-	-	X	PROVIDE ACORN MANUFACTURING MODEL NO. ST70-39 LAVATORY TEMPERING VALVE

* PROPOSED KITCHEN EQUIPMENT. FOR REFERENCE ONLY. FINAL KITCHEN EQUIPMENT TO BE PROVIDED BY KITCHEN EQUIPMENT SUPPLIER.

GAS FIRED WATER HEATER SCHEDULE

SYMBOL	MANUFACTURER	MODEL	LOCATION	STORAGE (GAL)	RECOVERY RATE (100 DEG. RISE)	BTU/HR	TEMP SETTING	ELECTRICAL REQUIREMENTS			REMARKS
								HZ	VOLTS	PHASE	
GWH-A	AO SMITH	BTH-120A	KITCHEN	120	138	120,000	140	60	120	1	PROVIDE CONDENSATE NUETRALIZER

ELECTRIC WATER HEATER SCHEDULE

SYMBOL	MANUFACTURER	MODEL	LOCATION	STORAGE (GAL)	RECOVERY RATE (100 DEG. RISE)	KW	TEMP SETTING	ELECTRICAL REQUIREMENTS			REMARKS
								HZ	VOLTS	PHASE	
EWH-A	AO SMITH	DRE-52-30	JANITORS CLOSET	52	123	30	140	60	480	3	

GREASE TRAP SCHEDULE

SYMBOL	FIXTURE				TRAP	CARRIER	REMARKS
	MANUFACTURER	MODEL	TYPE	SIZE			
GT-A	THERMACO BIG-DIPPER	W-350-IS	AUTOMATIC GREASE REMOVAL SYSTEM	35 GPM 70 POUNDS OF GREASE	-	FLOOR MOUNTED	STAINLESS STEEL CONSTRUCTION
GT-B	SCHIER	GB-75	PASSIVE GREASE INTERCEPTOR	75 GPM 616 POUNDS OF GREASE	-	UNDERSLAB	HIGH DENSITY POLYEHTYLENE, CERTIFIED TO SAME A112.14.3 (TYPE C)

DRAIN SCHEDULE

SYMBOL	TYPE	OUTLET	STRAINER	MANUFACTURER & MODEL #	REMARKS
FD-A	FLOOR DRAIN	NO-HUB	8-INCH SQUARE NICKEL BRONZE	JR SMITH 2010C-A	CAST IRON BODY, FLASHING COLLAR, QUAD CLOSE TRAP SEAL DEVICE
FD-B	FLOOR DRAIN	NO-HUB	8 1/2-INCH ROUND NICKEL BRONZE	JR SMITH 3021Y-C	CAST IRON BODY FLANGED RECPTOR WITH SEEPAGE HOLES, 6-INCH DEEP RECEIVER, ACID RESISTANT COATED INTERIOR, SEDIMENT BUCKET, QUAD CLOSE TRAP SEAL DEVICE
FD-C	FLOOR SINK	NO-HUB	8-INCH SQUARE NICKEL BRONZE 1/2 GRATE	JR SMITH 3141C-12-C	CAST IRON BODY FLANGED RECPTOR WITH SEEPAGE HOLES, 6-INCH DEEP RECEIVER, ACID RESISTANT COATED INTERIOR, SEDIMENT BUCKET, QUAD CLOSE TRAP SEAL DEVICE

NOTES: 1) BEFORE SETTING DRAINS, OBTAIN EXACT INFORMATION RELATIVE TO FINISH FLOOR LEVEL, FLOOR CONSTRUCTION AND SET TOP OF DRAINS AT FINISH FLOOR LEVEL.
2) SIZE OF DRAINS IS INDICATED ON THE DRAWINGS.

CONSTRUCTION DOCUMENTS
12/11/15

COPYRIGHT 2015 WESTON & SAMPSON

Weston&Sampson®
273 Dividend Road, Rocky Hill, CT 06067
(860) 513-1473 (800) SAMPSON
www.westonandsampson.com

No.	Date	Description	Dr.By	Ck.By	App.By
			A. P. O'Neill		

REGISTERED PROFESSIONAL ENGINEER
12-16-2015
DATE

TOWN OF GREENWICH – DEPARTMENT OF PUBLIC WORKS
RITCH AVENUE WEST, GREENWICH, CONNECTICUT
BYRAM PARK POOL REPLACEMENT

PLUMBING LEGEND AND SCHEDULE

CADD NO.	SCALE	CONTRACT	JOB NO.	DR.BY	DSN.BY	CHK.BY	APP.BY
–	1/4"=1'-0"		2130336	KJP	KJP	SEH	SEH

P0.00

FILE NO. –

SHEET – OF

Z:\CT-Rocky Hill-Projects\Greenwich CT\Greenwich Parks and Recreation\Byram Park\CAD\MEP\Plumbing\P0.00 PLUMBING LEGEND.dwg

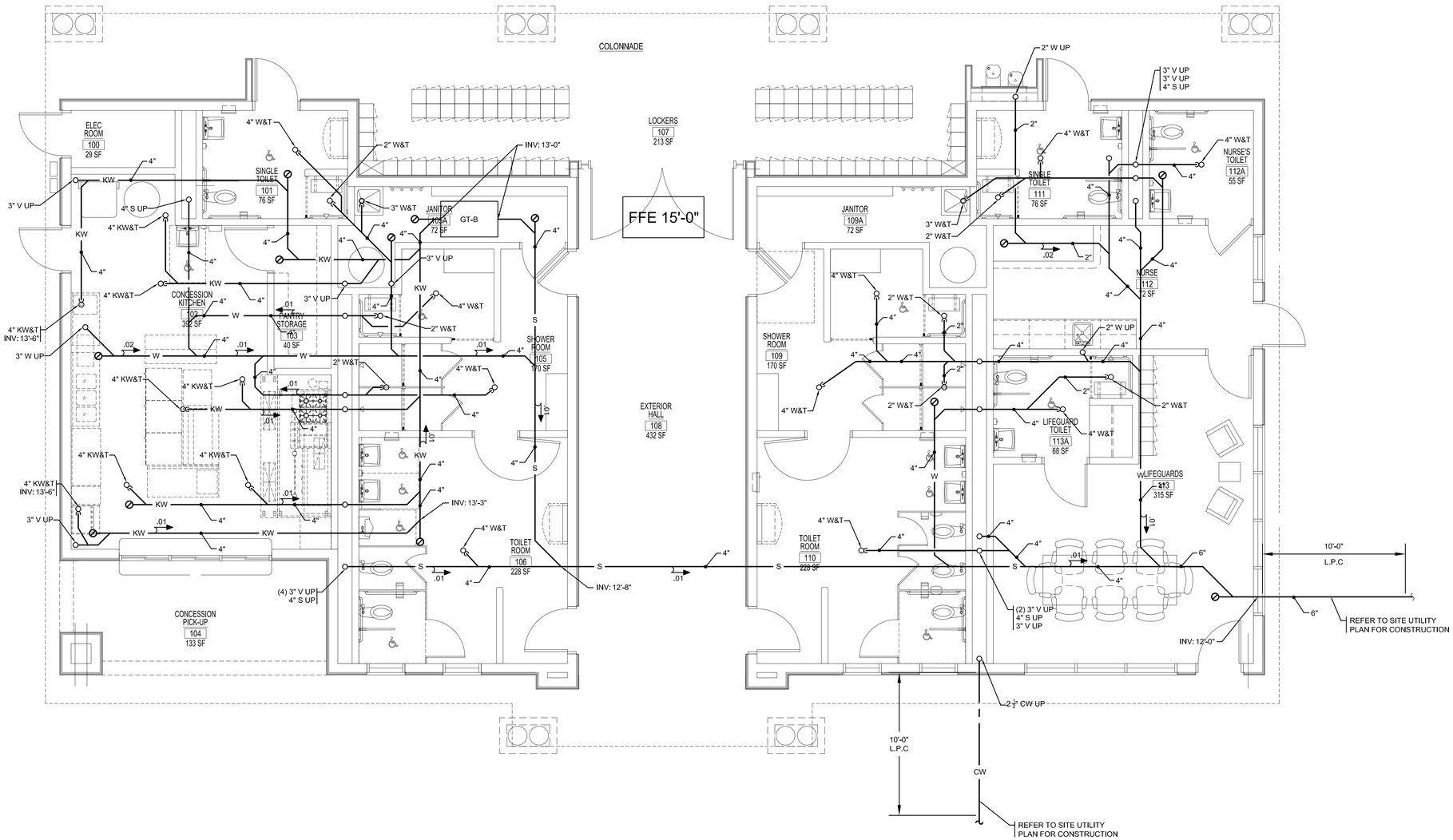

CONSTRUCTION DOCUMENTS
12/11/15

COPYRIGHT 2015 WESTON & SAMPSON

Z:\CT-Rocky Hill-Projects\Greenwich CT\Greenwich Parks and Recreation\Byram Park\CAD\MEP\Plumbing\P1.00 PLUMBING UNDERSLAB PLAN.dwg

Weston&Sampson®
273 Dividend Road, Rocky Hill, CT 06067
(860) 513-1473 (800) SAMPSON
www.westonandsampson.com

No.	Date	Dr.By	Ck.By	App.By	Description

REGISTERED PROFESSIONAL ENGINEER — DATE 12-16-2015

STATE OF CONNECTICUT REGISTERED PROFESSIONAL ENGINEER

TOWN OF GREENWICH – DEPARTMENT OF PUBLIC WORKS
RITCH AVENUE WEST, GREENWICH, CONNECTICUT
BYRAM PARK POOL REPLACEMENT

PLUMBING UNDERSLAB PLAN

DR.BY	CHK.BY	DSN.BY	APP.BY
KJP	SEH	KJP	SEH

JOB NO. 2130336 | CONTRACT: | SCALE: 1/4"=1'-0" | CADD NO. – | FILE NO. –

P1.00

SHEET – OF

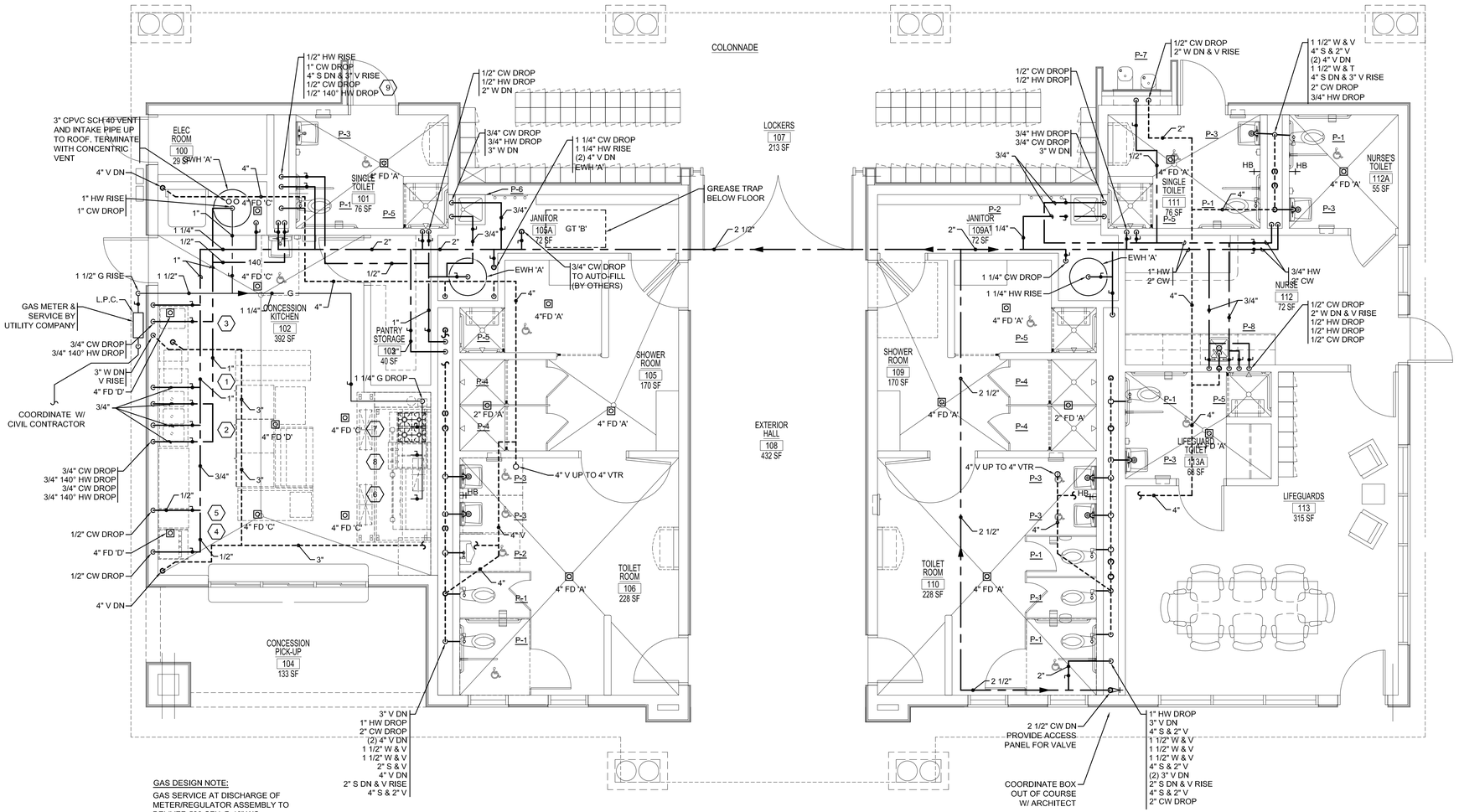

GAS DESIGN NOTE:

GAS SERVICE AT DISCHARGE OF METER/REGULATOR ASSEMBLY TO DELIVER 530 CFH @ 10" WC. PIPE SIZED OH O.5" W.C. PRESSURE LOSS OVER A TOTAL EQUIVALENT LENGTH OF 50'.

KITCHEN EQUIPMENT TO BE PROVIDED BY OTHERS.

MAIN BUILDING FLOOR PLAN

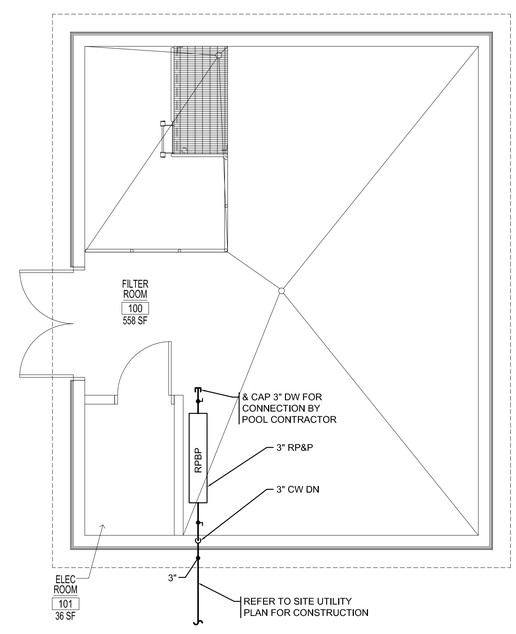

FILTER ROOM EQUIPMENT FLOOR PLAN

CONSTRUCTION DOCUMENTS
12/11/15

COPYRIGHT 2015 WESTON & SAMPSON

Z:\CT-Rockyhill-Projects\Greenwich CT\Greenwich Parks and Recreation\Byram Park\CAD\MEP\Plumbing\P1.01 PLUMBING FLOOR PLAN.dwg

Weston&Sampson®
275 Dividend Road, Rocky Hill, CT 06067
(860) 513-1473 (800) SAMPSON
www.westonandsampson.com

No.	Date	Dr.By	Ck.By	App.By	Description

REGISTERED PROFESSIONAL ENGINEER

12-11-2015
DATE

TOWN OF GREENWICH – DEPARTMENT OF PUBLIC WORKS
RITCH AVENUE WEST, GREENWICH, CONNECTICUT
BYRAM PARK POOL REPLACEMENT

PLUMBING FLOOR PLAN

CADD NO.	SCALE	CONTRACT	JOB NO.	DR.BY	DSN.BY	CHK.BY	APP.BY
–	1/4"=1'-0"		21303.36	KJP	KJP	SEH	SEH

FILE NO. –

P1.01

SHEET – OF

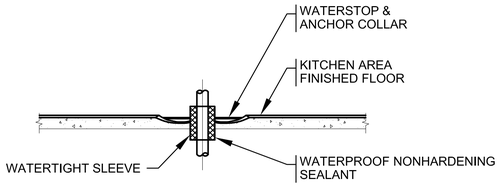

NOTE:

1. BANG WATERPROOF MEMBRANE TO UNDERSIDE OF ALL WATER STOPS & ANCHOR COLLARS

KITCHEN AREA SLEEVE

NO SCALE

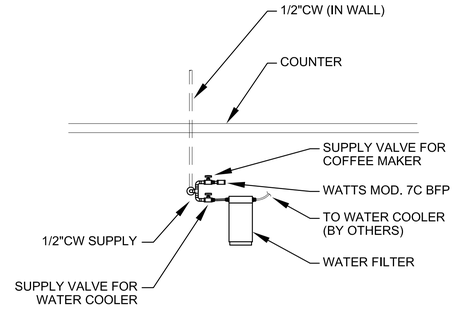

SUPPLY STOPS FOR KIT EQUIPMENT

NO SCALE

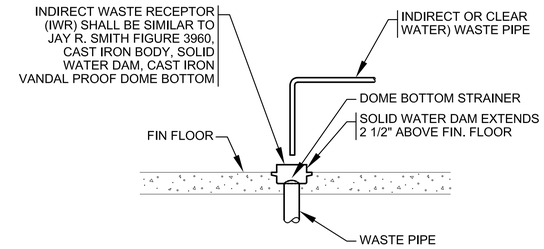

INDIRECT WASTE RECEPTOR

NO SCALE

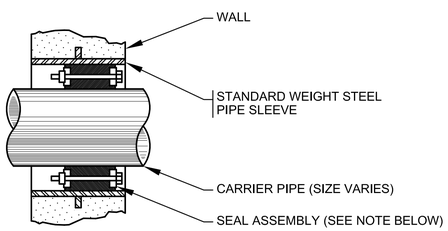

NOTES:

1. SEAL ASSEMBLY SHALL BE MODULAR MECHANICAL TYPE CONSISTING OF INTERLOCKING RUBBER LINKS SHAPED TO CONTINUOUSLY FILL IN THE ANNULAR SPACE BETWEEN PIPE & WALL OPENING
2. PRESSURE PLATES SHALL BE DELRIN PLASTIC
3. BOLTS & NUTS SHALL BE 18.8 STAINLESS STEEL
4. SEALING ELEMENT SHALL BE EPDM RUBBER

WATERTIGHT SLEEVE

NO SCALE

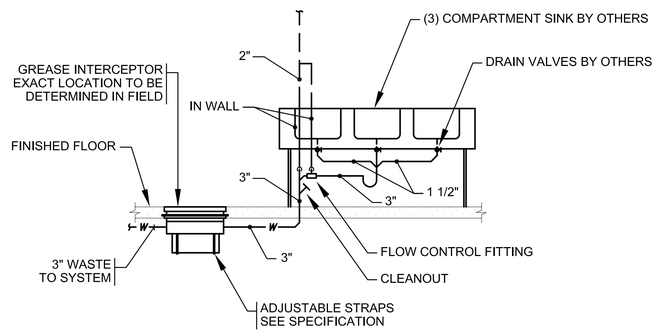

GREASE INTERCEPTOR

NO SCALE

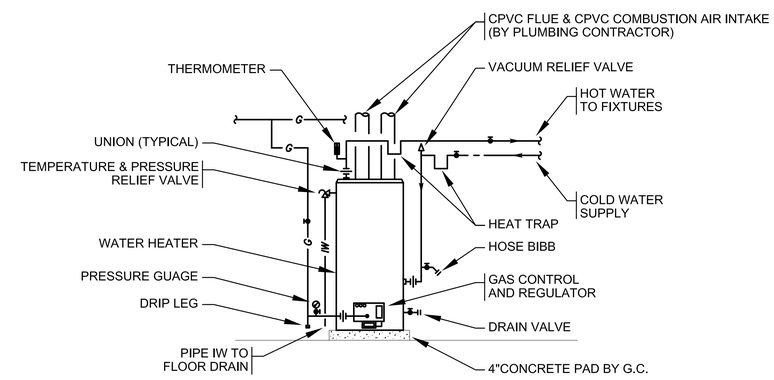

NOTE:

1. FOR PIPE SIZES REFER TO FLOOR PLANS
2. PIPE CONDENSATE TO NEAREST FLOOR DRAIN

GAS WATER HEATER DIAGRAM

NO SCALE

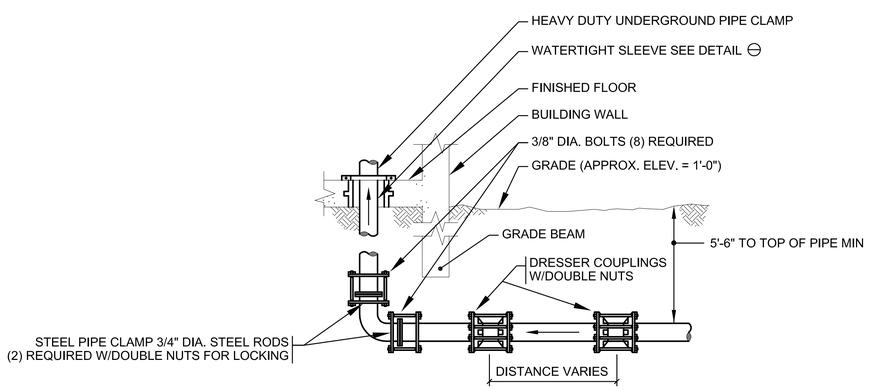

NOTE:

1. TYPICAL FOR DOMESTIC AND FIRE PROTECTION SERVICES 4 INCHES AND LARGER.

WATER SERVICE ENTRANCE

NO SCALE

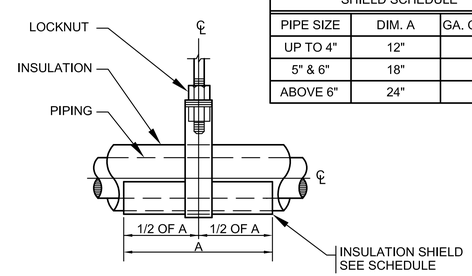

INSULATION SHIELD SCHEDULE		
PIPE SIZE	DIM. A	GA. OF STEEL
UP TO 4"	12"	18
5" & 6"	18"	16
ABOVE 6"	24"	14

PIPE HANGER/SHIELD DIAGRAM

NO SCALE

CONSTRUCTION DOCUMENTS
12/11/15

COPYRIGHT 2015 WESTON & SAMPSON

Weston&Sampson®
273 Dividend Road, Rocky Hill, CT 06067
(860) 513-1473 (800) SAMPSON
www.westonandsampson.com

No.	Date	Dr.By	Ck.By	App.By	Description
		A P			O V E D

REGISTERED PROFESSIONAL ENGINEER — DATE 12-11-2015

TOWN OF GREENWICH – DEPARTMENT OF PUBLIC WORKS
RITCH AVENUE WEST, GREENWICH, CONNECTICUT
BYRAM PARK POOL REPLACEMENT

PLUMBING DETAILS

CADD NO.	SCALE:	CONTRACT:	JOB NO.	DR.BY	DSN.BY	CHK.BY	APP.BY
–	1/8"=1'-0"		2130336	KJP	KJP	SEH	SEH

P2.01

FILE NO. –

SHEET – OF

Z:\CT-Rockyhill-Projects\Greenwich CT\Greenwich Parks and Recreation\Byram Park\CAD\MEP\Plumbing\P2.01 PLUMBING DETAILS.dwg

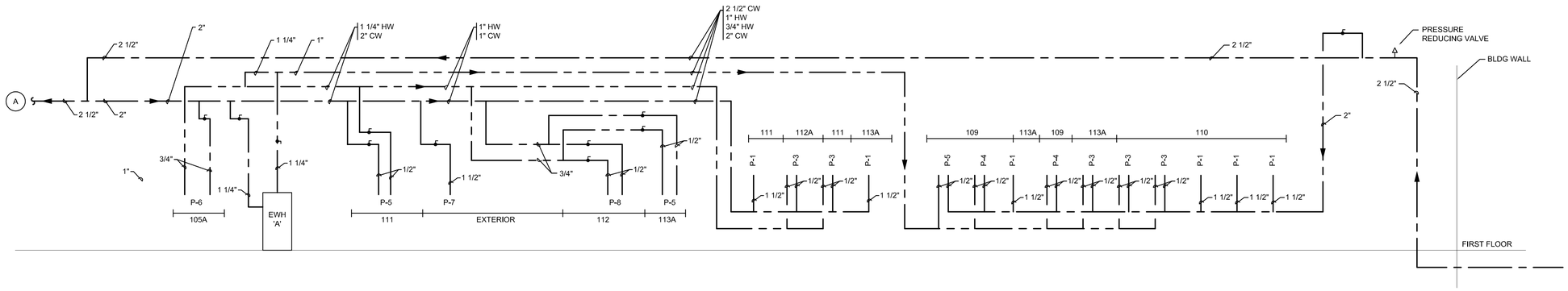

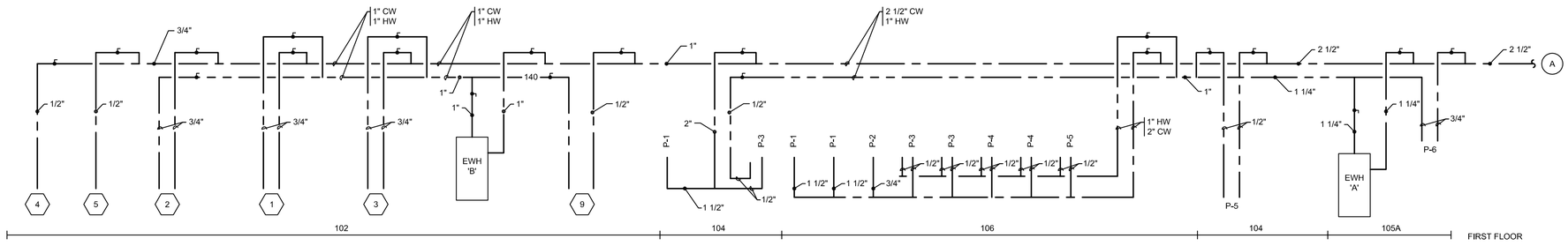

DOMESTIC WATER RISER DIAGRAM

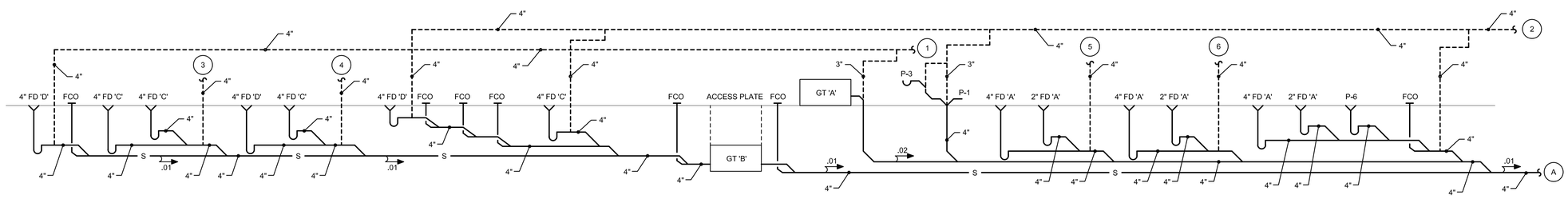

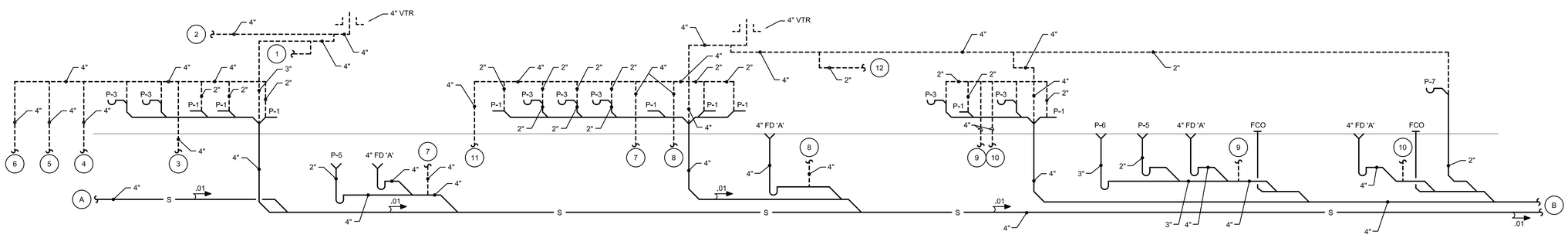

SANITARY RISER DIAGRAM

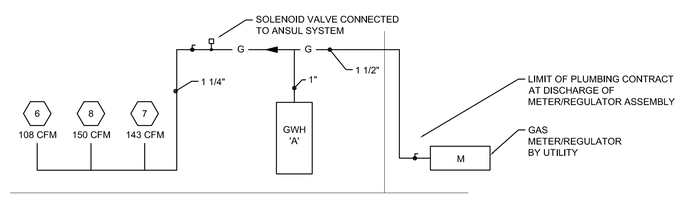

NATURAL GAS RISER DIAGRAM

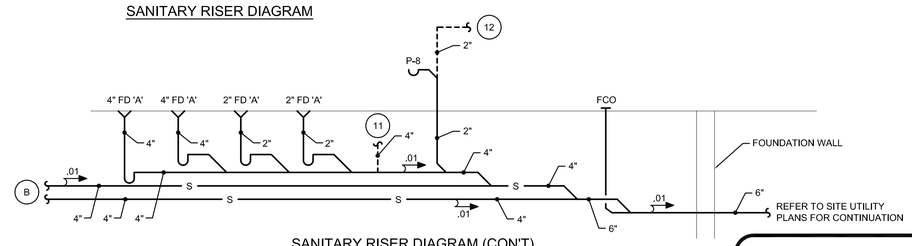

SANITARY RISER DIAGRAM (CON'T)

CONSTRUCTION DOCUMENTS
12/11/15

COPYRIGHT 2015 WESTON & SAMPSON

Weston&Sampson®
273 Dividend Road, Rocky Hill, CT 06067
(860) 513-1473 (800) SAMPSON
www.westonandsampson.com

No.	Date	Dr.By	Ck.By	App.By	Description	DATE
		A	P	R	O V E D	12-16-2015

REGISTERED PROFESSIONAL ENGINEER

TOWN OF GREENWICH – DEPARTMENT OF PUBLIC WORKS
RITCH AVENUE WEST, GREENWICH, CONNECTICUT
BYRAM PARK POOL REPLACEMENT

PLUMBING RISER DIAGRAMS

CADD NO.	SCALE	CONTRACT	JOB NO.	DR.BY	DSN.BY	CHK.BY	APP.BY
–	1/8"=1'-0"		2130336	KJP	KJ	SE	SEH

P2.02

FILE NO. –

SHEET – OF

Z:\CT-Rocky Hill-Projects\Greenwich CT\Greenwich Parks and Recreation\Byram Park\CAD\MEP\Plumbing\P2.02 PLUMBING RISER DIAGRAMS.dwg

CONSTRUCTION DOCUMENTS 12/11/15

ABBREVIATIONS:

ACT	ACOUSTICAL TILE
AFF	ABOVE FINISH FLOOR
ALT	ALTERNATE
ALUM	ALUMINUM
ANC BLT	ANCHOR BOLT
APPROX	APPROXIMATE
ARCH	ARCHITECT
BD	BOARD
BITUM	BITUMINOUS
BF	BRACE FRAME
BLDG	BUILDING
BLK	BLOCK
BLKG	BLOCKING
BM	BENCH MARK
B.O.	BOTTOM OF
BOF	BOTTOM OF FOOTING
BOTT	BOTTOM
BPL	BEARING PLATE
BVL	BEVELED
CAB	CABINET
CB	CATCH BASIN
CH	CEILING HEIGHT
CJ	CONTROL JOINT
℄	CENTER LINE
CLG	CEILING
CLOS	CLOSET
CLR	CLEAR
CMU	CONCRETE MASONRY UNIT
COL	COLUMN
COMP	COMPOSITION
CONC	CONCRETE
CONST	CONSTRUCTION
CONT	CONTINUOUS
COORD	COORDINATE
CPT	CARPET
CT	CERAMIC TILE
CY	CUBIC YARD
DBL	DOUBLE
DEMO	DEMOLITION
DI	DRAIN INLET
DIAG	DIAGONAL
DIAM	DIAMETER
DIM	DIMENSION
DL	DRAIN LEADER
DN	DOWN
DR	DOOR
DS	DOWNSPOUT
DTL	DETAIL
DWG	DRAWING
EA	EACH
EF	EACH FACE
EJ	EXPANSION JOINT
ELEC	ELECTRIC
EL	ELEVATION
ELEV	ELEVATION / ELEVATOR
EMERG	EMERGENCY
ENCL	ENCLOSURE
EP	ELECTRICAL PANEL
	(CONTINUED...)
EPXY	EPOXY SEALING SYSTEM
EQ	EQUAL
EQUIP	EQUIPMENT
ER	EXISTING TO REMAIN
EXH	EXHAUST
EXIST	EXISTING
EXIST'G	EXISTING
EXP	EXPANSION
EXPT	EPOXY PAINT
EXT	EXTERIOR
EW	EACH WAY
FA	FIRE ALARM
FACP	FIRE ALARM CONTROL PANEL
FAK	FIRST AID KIT
FB	FIRE BLANKET
FCU	FAN COIL UNIT
FD	FLOOR DRAIN
FE	FIRE EXTINGUISHER
FF	FINISH FLOOR
FFE	FINISH FLOOR ELEVATION
FIN	FINISH
FG	FIBERGLASS
FRP	FIBERGLASS REINF PLASTIC
FLASH	FLASHING
FLR	FLOOR
FLUOR	FLUORESCENT
FNDN	FOUNDATION
FOC	FACE OF CONCRETE
FOF	FACE OF FINISH
FOM	FACE OF MASONRY
FOS	FACE OF STUD
FP	FIREPROOFING
FR	FIRE RETARDENT
FRWP	FIBERGLASS REINFORCED WALL PANEL
FT	FEET
FTG	FOOTING
FUR	FURRING
GA	GAUGE
GB	GRAB BAR
GC	GENERAL CONTRACTOR
GALV	GALVANIZED
GL	GLASS
GN	GOOSENECK
GYP	GYPSUM WALL BOARD
HB	HOSE BIB
HC	HANDICAP
HD	HEAVY DUTY
HDWR	HARDWARE
HM	HOLLOW METAL
HOR	HORIZONTAL
HP	HIGH POINT
HT	HEIGHT
HTR	HEATER
HVAC	HEATING, VENTILATING, AIR CONDITIONING
ICMU	12" NOMINAL CMU INSULATED SINGLE WYTHE EXTERIOR WALL ASSEMBLY
ID	INSIDE DIAMETER
INFO	INFORMATION
INSUL	INSULATION / INSULATED
INT	INTERIOR
INV	INVERT
	(CONTINUED...)
JST	JOIST
JT	JOINT
KIP	1,000 LBS
KO	KNOCKOUT
KPLT	KICKPLATE
LP	LOW POINT
LSC	LIFE SAFETY CODE
MAS	MASONRY
MAX	MAXIMUM
MECH	MECHANICAL
MANUF	MANUFACTURER
MH	MANHOLE
MIN	MINIMUM
MIRR	MIRROR
MISC	MISCELLANEOUS
ML	MATCH LINE
M.O.	MASONRY OPENING
MOD	MODULAR
MS	METAL STUD
MTD	MOUNTED
MTL	METAL
NA	NOT APPLICABLE
NIC	NOT IN CONTRACT
NOM	NOMINAL
NO.	NUMBER
NTS	NOT TO SCALE
NUM	NUMBER
NW	NEW
OA	OVERALL
OC	ON CENTER
OD	OUTSIDE DIAMETER
OH	OVERHEAD / OPPOSITE HAND
OPNG	OPENING
OPP HAND	OPPOSITE HAND
OPP HD	OPPOSITE HAND
OPP	OPPOSITE
PERIM	PERIMETER
PL	PROPERTY LINE
PLAM	PLASTIC LAMINATE
PLAS	PLASTIC
PLWD	PLYWOOD
PMJF	PREMOLDED JOINT FILLER
PNT	PAINT
PNTD	PAINTED
PR	PAIR
PREFIN	PREFINISHED
PSF	POUNDS PER SQUARE FOOT
PSI	POUNDS PER SQUARE INCH
PT	PRESSURE TREATED
PTD	PAPER TOWEL DISPENSER
PTN	PARTITION
PVC	POLYVINYL CHLORIDE
PVMT	PAVEMENT
QT	QUARRY TILE
	(CONTINUED...)
R & D	REMOVE & DISPOSE
R & R	REMOVE & REPLACE
R & S	REMOVE & SALVAGE
R	RADIUS/RISER
RB	RUBBER WALL BASE
RUB	RUBBER
RD	ROOF DRAIN
REFURB	REFURBISH
RELOC	RELOCATED
REINF	REINFORCEMENT
RES	RESILIENT
REQ'D	REQUIRED
REV	REVISION
RFS	RESINOUS FLOOR SYSTEM
RH	RIGHT HAND
RL	RAIN LEADER
RM	ROOM
R.O.	ROUGH OPENING
RTU	ROOF TOP UNIT
S	SEALANT
SD	SOAP DISPENSER
SF	SQUARE FEET
SIM	SIMILAR
S.L.	STRUCTURAL LINE
SPEC	SPECIFICATION
SQ	SQUARE
SS	STAINLESS STEEL
STD	STANDARD
STL	STEEL
STOR	STORAGE
STRUCT	STRUCTURE or STRUCTURAL
SUSP	SUSPENDED or SUSPENSION
SV	SHEET VINYL
T	TREAD
TBD	TO BE DETERMINED
TEL	TELEPHONE
TEMP	TEMPORARY
THK	THICK or THICKNESS
T'HOLD	THRESHOLD
TOC	TOP OF CURB / TOP OF CONCRETE
TOL	TOP OF LANDING
TOP	TOP OF PLATE / TOP OF PAVEMENT
TOS	TOP OF STEEL
TOW	TOP OF WALL
TTD	TOILET TISSUE DISPENSER
TYP	TYPICAL
UG	UNDERGROUND
UNO	UNLESS NOTED OTHERWISE
UV	UNIT VENTILATOR
VB	VINYL WALL BASE
VCT	VINYL COMPOSITION TILE
VERT	VERTICAL
VEST	VESTIBULE
V.I.F.	VERIFY IN FIELD
VS	VENT STACK
VT	VINYL TREAD / VINYL TREAD
VTS	VINYL TRANSITION STRIP
W/	WITH
W/O	WITHOUT
WC	WATER CLOSET
WD	WOOD
WF	WIRE FABRIC
WG	WIRE GLASS
WP	WORK POINT
WP'G	WATERPROOF(ING)
WS	WOOD STUD
WT	WEIGHT
WWF	WELDED WIRE FABRIC

LEGEND:

- 102 — DOOR AND FRAME ASSEMBLY
- CONTROL / LAB ROOM 101 — ROOM TAG
- 10'-0" — DIMENSION
- A — WINDOW TYPE TAG
- T.O. CONC FLOOR ELEV. - 0'-6" — ELEVATION TAG / FINISH FLOOR ELEVATION
- C 12'-0" — WALL TYPE DESIGNATION (DIMENSION DENOTES HEIGHT OF WALL ABOVE FINISH FLOOR, NO DIMENSION MEANS TO UNDERSIDE OF ROOF DECK)
- 100 — ROOF TYPE TAG
- 4 / 1 A7.00 3 / 2 (DETAIL NO., DRAWING NO.) — INTERIOR ELEVATION CALL-OUT SYMBOL
- X / AX-X (DRAWING NO., ELEVATION SUB-LETTER DESIGNATION) — WALL SECTION or DETAIL
- 3 / A-2.1 (DETAIL NO., DRAWING NO.) — ELEVATION SYMBOL
- 3 / A-2.1 (DETAIL NO., DRAWING NO.) — SECTION SYMBOL
- X / AX-X (DRAWING NO., ELEVATION SUB-LETTER DESIGNATION) — DETAIL SYMBOL & CALL-OUT BUBBLE
- 1 LARGE SCALE PLAN, SCALE: 1/8" = 1'–0" — DRAWING TITLE
- NORTH ARROW
- 1A — SPECIFIC CONSTRUCTION NOTE
- WP — ELEVATION or WORK POINT (WP)
- ALIGN — ALIGN SURFACES
- 1 — REVISION MARKER
- 3.5 — STRUCTURAL COLUMN GRID
- BATT INSULATION / SOUND ATTENUATION BLANKET
- FIBER CEMENT
- CONCRETE
- CONCRETE MASONRY UNIT
- GLASS
- PLYWOOD
- RIGID INSULATION
- WOOD
- PVC
- WOOD STUDS / BLOCKING (DIMENSIONAL LUMBER)
- WOOD BLOCKING (NON-DIMENSIONAL)

GENERAL CONSTRUCTION NOTES:

1. ALL INTERIOR DIMENSIONS ARE TAKEN TO FACE OF WALL FROM FACE OF WALL UNLESS SPECIFICALLY NOTED OTHERWISE. DO NOT SCALE DRAWINGS. REFER TO ENLARGED PLANS AND DETAILS FOR FURTHER DIMENSIONING INFORMATION. ALL WORK LINES AND LEVELS SHALL BE LAID OUT BY WRITTEN DIMENSIONS. ANY DEVIATIONS SHALL BE BROUGHT TO THE ATTENTION OF THE ENGINEER. ALL DEVIATIONS AND DISCREPANCIES SHALL BE CORRECTED BY THE CONTRACTOR BEFORE HE BEGINS HIS PORTION OF THE WORK.
2. THE GENERAL CONTRACTOR (G.C.) SHALL FIELD VERIFY ALL DIMENSIONS & CONDITIONS PRIOR TO THE WORK AND SHALL NOTIFY THE ARCHITECT REGARDING ANY DISCREPANCIES.
3. THE G.C. SHALL BE RESPONSIBLE FOR ALL PERMITS, BACKCHARGES AND FEES AS REQUIRED BY THE TOWN OF GREENWICH, CT
4. PERFORM ALL WORK IN ACCORDANCE WITH THE CT STATE BUILDING CODE (2003 IBC WITH CT AMENDMENTS), AS WELL AS ALL LOCAL CODES AND ORDINANCES.
5. THE G.C. SHALL SUBMIT ALL SHOP DRAWINGS, SAMPLES, CATALOG CUTS ETC., INCLUDING COLOR CHARTS FOR PAINTS, FOR ALL INTERIOR FINISHES, TO THE ARCHITECT FOR SELECTION, REVIEW AND APPROVAL PRIOR TO FABRICATION OR INSTALLATION.
6. THE G.C. SHALL BE RESPONSIBLE FOR DAILY REMOVAL AND LEGAL DISPOSAL OF ALL DEBRIS OFF SITE.
7. PROVIDE ALL ACCESSIBLE FIXTURES, CONTROLS & ACCESSORIES, AND APPROPRIATE CLEARANCES, AS REQ'D FOR COMPLIANCE W/ CT STATE BUILDING W/ AMENDMENTS, TYP.
8. ALL INTERIOR MATERIAL SURFACE COLORS AND TEXTURES SHALL BE SELECTED BY THE ENGINEER FROM THE MANUFACTURES STANDARD FINISH/COLOR SELECTIONS.
9. THE G.C. SHALL INSTALL ALL INTERIOR FINISHES AT ALL SURFACES INDICATED ON THE DRAWINGS IN CONFORMANCE TO CT.S.B.C. ALL DOORS SHALL HAVE LEVER HARDWARE TO CONFORM TO ANSI 2003.
10. DETAILS AND NOTES SHOWN ON THE ARCHITECTURAL DRAWINGS SHALL BE APPLICABLE TO ALL PARTS OF ARCHITECTURAL WORK EXCEPT WHERE SPECIFICALLY REQUIRED OTHERWISE BY THE CONTRACT DOCUMENTS. CONDITIONS NOT SPECIFICALLY SHOWN SHALL BE SIMILAR TO THOSE SHOWN FOR LIKE CONDITIONS AS DETERMINED BY THE ENGINEER.
11. CONTRACTOR SHALL PROTECT ALL EXISTING CONSTRUCTION REMAIN. ANY DAMAGED CONSTRUCTION TO REMAIN SHALL BE REPLACED AT THE CONTRACTOR'S EXPENSE AND TO THE ACCEPTANCE OF THE ENGINEER.

ROOF TYPES

SCALE: 3" = 1'-0" (SECTION VIEW)

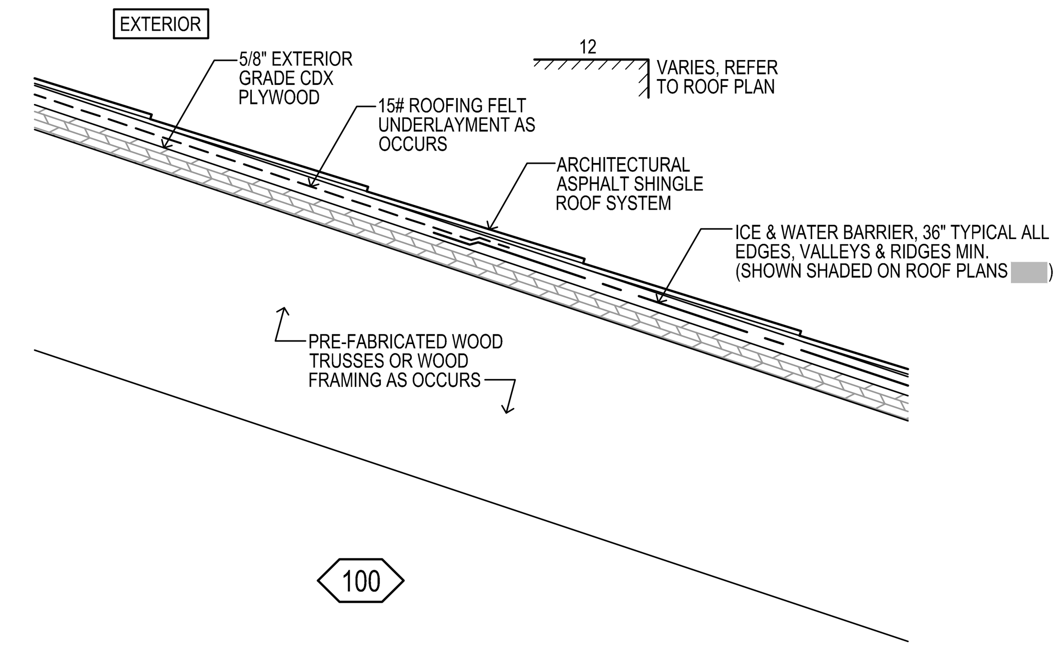

WALL TYPES, CONTINUED

SCALE: 3" = 1'-0" (PLAN VIEW)

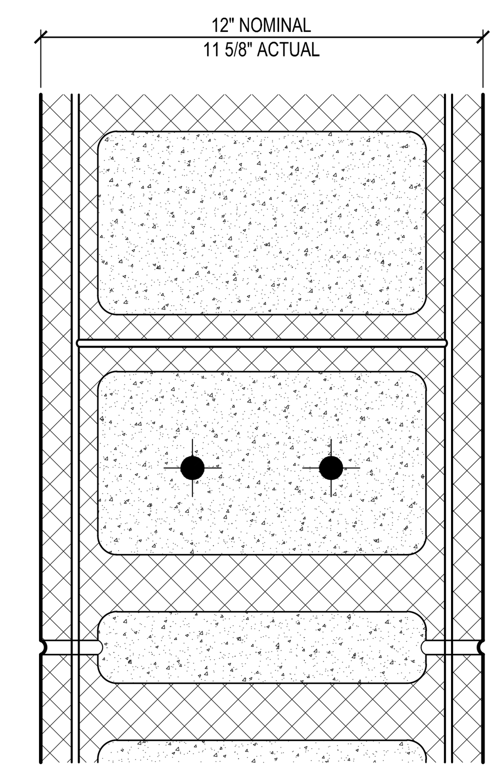

- 12" NOMINAL CMU
- CONT LADDER TYPE HORIZ REINF AT 16" O.C. VERT
- STRUCT REINF PER STRUCT DWGS
- GROUT ALL CORES SOLID

F — 12" NOMINAL CMU WALL

- ALTERNATE WALL TYPE -

WALL TYPES

SCALE: 3" = 1'-0" (PLAN VIEW)

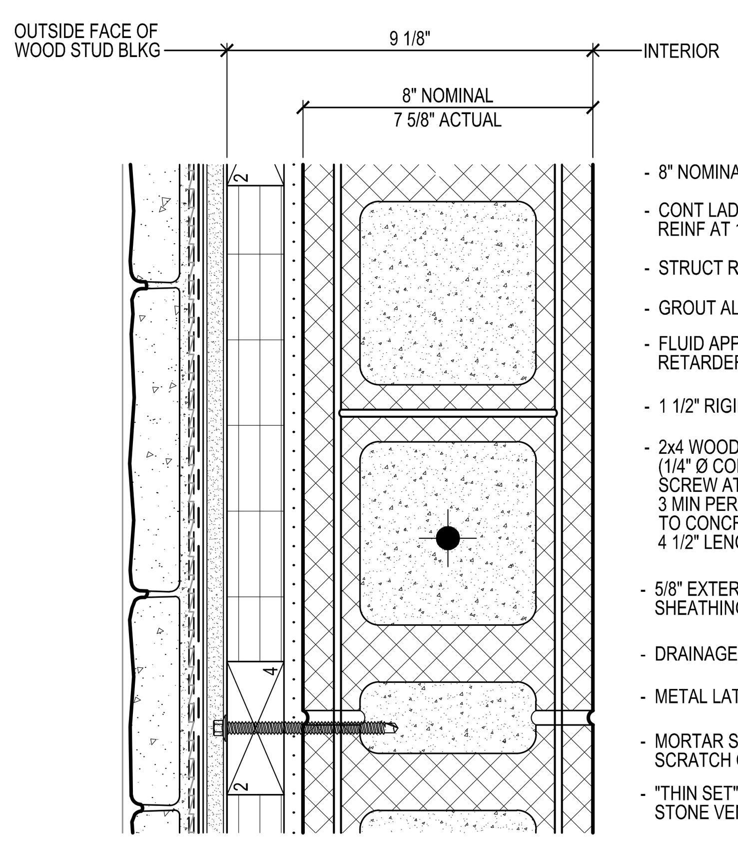

- 8" NOMINAL CMU
- CONT LADDER TYPE HORIZ REINF AT 16" O.C. VERT
- STRUCT REINF PER STRUCT DWGS
- GROUT ALL CORES SOLID
- FLUID APPLIED VAPOR RETARDER, CLASS A, (· · ·)
- 1 1/2" RIGID INSULATION
- 2x4 WOOD FRAMING AT 2'-0" O.C. (1/4" Ø CONCRETE ANCHOR SCREW AT 16" O.C. VERT. MAX, 3 MIN PER SECTION FROM GRADE TO CONCRETE STONE SILL, 4 1/2" LENGTH SCREWS)
- 5/8" EXTERIOR GRADE GYPSUM SHEATHING, MOISTURE RESISTANT
- DRAINAGE MAT, (—— — — ——)
- METAL LATH, (══════)
- MORTAR SETTING ADHESIVE BED / SCRATCH COAT
- "THIN SET" ADHERED MASONRY STONE VENEER

A1 — 8" NOMINAL CMU WALL W/ WOOD BLOCKING & ADHERED MASONRY STONE VENEER

(BELOW CAST CONCRETE SILL ASSEMBLY)

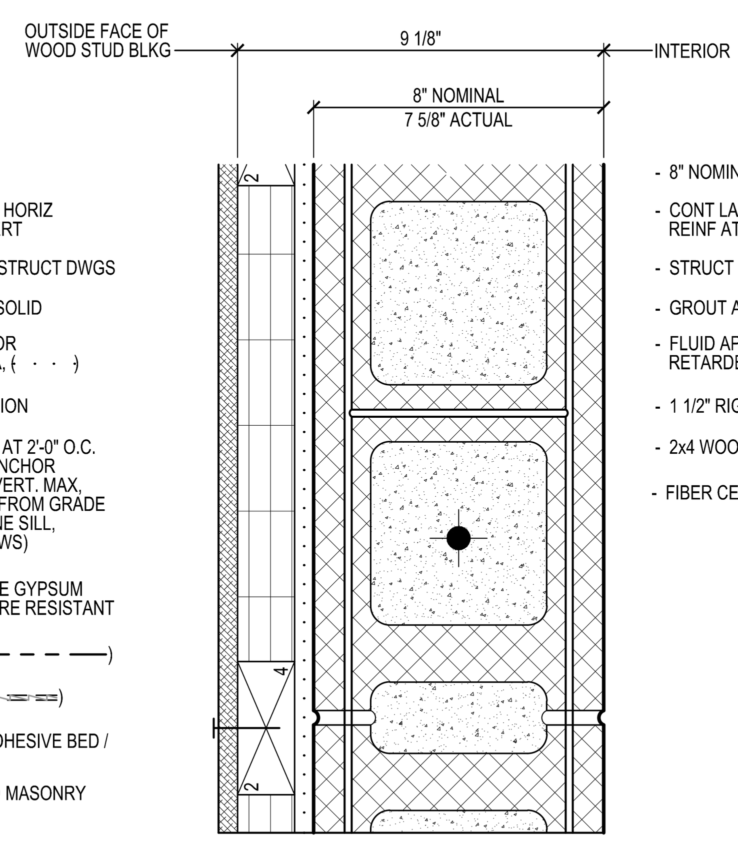

- 8" NOMINAL CMU
- CONT LADDER TYPE HORIZ REINF AT 16" O.C. VERT
- STRUCT REINF PER STRUCT DWGS
- GROUT ALL CORES SOLID
- FLUID APPLIED VAPOR RETARDER, CLASS A, (· · ·)
- 1 1/2" RIGID INSULATION
- 2x4 WOOD FURRING AT 2'-0" O.C.
- FIBER CEMENT SIDING SYSTEM

A2 — 8" NOMINAL CMU WALL W/ WOOD BLOCKING & FIBER CEMENT SIDING

(ABOVE CAST CONCRETE SILL ASSEMBLY)

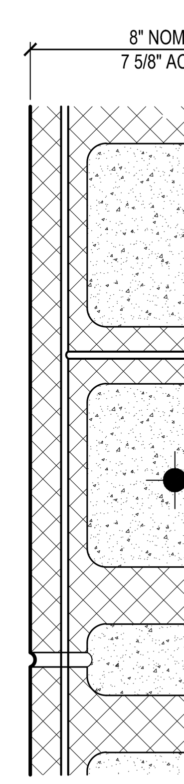

- 8" NOMINAL CMU
- CONT LADDER TYPE HORIZ REINF AT 16" O.C. VERT
- STRUCT REINF PER STRUCT DWGS
- GROUT ALL CORES SOLID

B — 8" NOMINAL CMU WALL

B1 — 1 HOUR FIRE RATED - BASED ON CLASSIFICATION UL DESIGN NO. U905

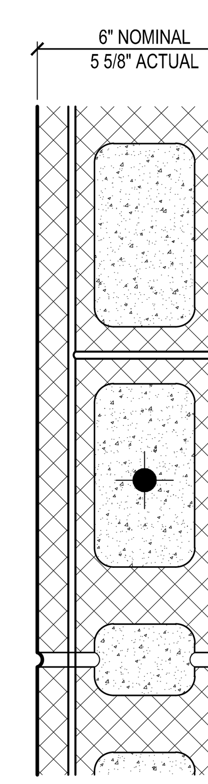

- 6" NOMINAL CMU
- CONT LADDER TYPE HORIZ REINF AT 16" O.C. VERT
- STRUCT REINF PER STRUCT DWGS
- GROUT ALL CORES SOLID

C — 6" NOMINAL CMU WALL

C1 — 1 HOUR FIRE RATED - BASED ON CLASSIFICATION UL DESIGN NO. U905

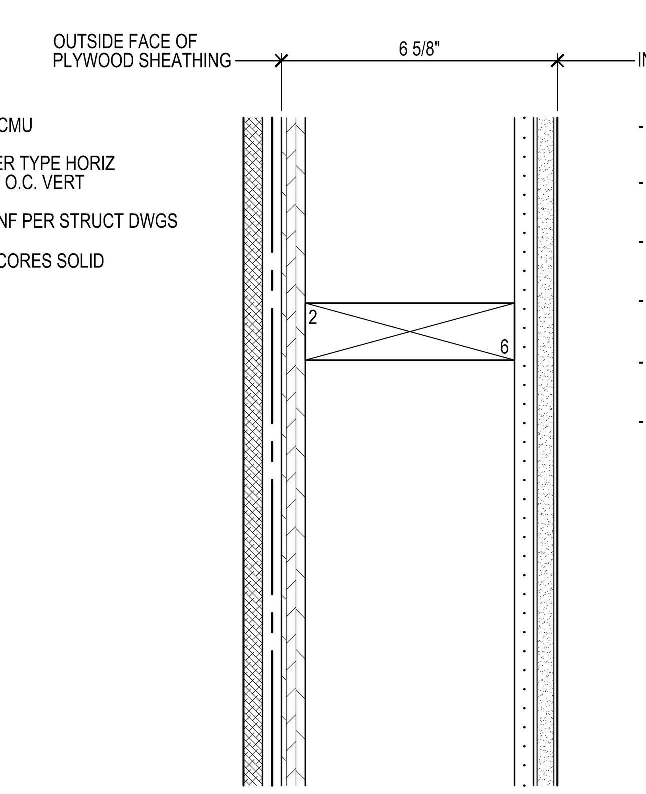

- FIBER CEMENT LAP SIDING SYSTEM
- CONT AIR & MOISTURE BARRIER, (————)
- 5/8" CDX EXTERIOR SHEATHING
- 2x6 PT WD STUDS AT 16" O.C.
- CONT VAPOR BARRIER (· · · · · · ·)
- 5/8" GYPSUM BOARD

D — 5 1/2" WOOD STUD WALL W/ FIBER CEMENT SIDING ON THE EXTERIOR AND 5/8" GYP BD ON THE INTERIOR

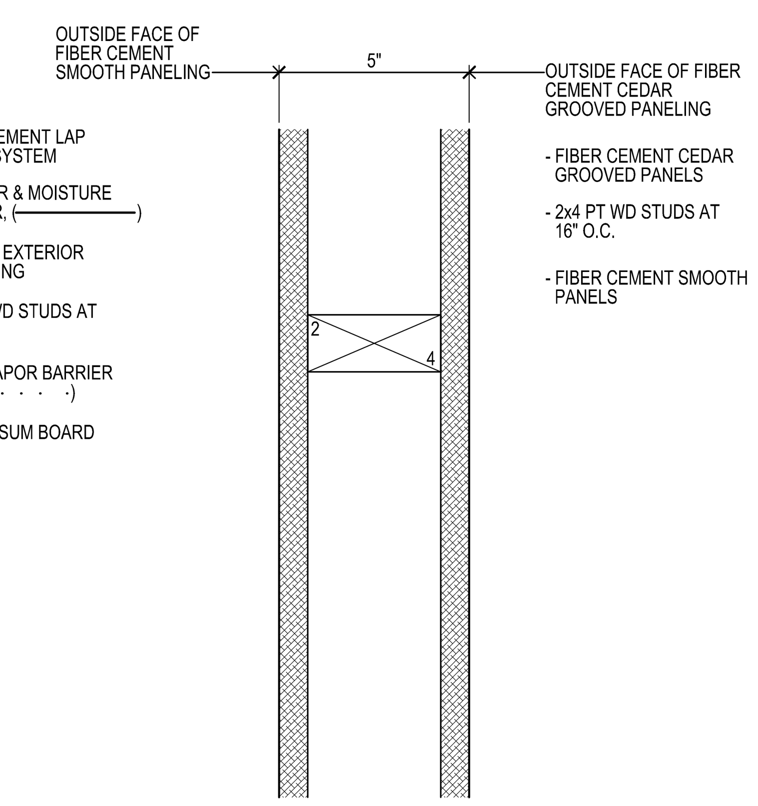

- FIBER CEMENT CEDAR GROOVED PANELS
- 2x4 PT WD STUDS AT 16" O.C.
- FIBER CEMENT SMOOTH PANELS

E — 3 1/2" WOOD STUD WALL W/ FIBER CEMENT PANELING ON BOTH SIDES

Weston&Sampson®
273 Dividend Road, Rocky Hill, CT 06067
(860) 513-1473 (800) SAMPSON
www.westonandsampson.com

No.	Date	Dr.By	Ck.By	App.By	Description

A P P R O V E D

REGISTERED PROFESSIONAL ENGINEER

DECEMBER 15, 2015

DATE

STATE OF CONNECTICUT ★ DANIEL G. TENNEY III No. 12264 LICENSED ARCHITECT

TOWN OF GREENWICH – DEPARTMENT OF PUBLIC WORKS
RITCH AVENUE WEST, GREENWICH, CONNECTICUT

BYRAM PARK POOL REPLACEMENT

ABBREVIATIONS, LEGEND, NOTES & WALL TYPES

CADD NO.	SCALE:	CONTRACT:	JOB NO.	DR.BY	DSN.BY	CHK.BY	APP.BY
GREENWICH	VARIES	–	2130336	BPM	BPM	JRC	DGT

FILE NO.

A0.00

SHEET – OF –

CONSTRUCTION DOCUMENTS
12/11/15

EXTERIOR SIGN TYPES

SCALE: 3" = 1'-0"

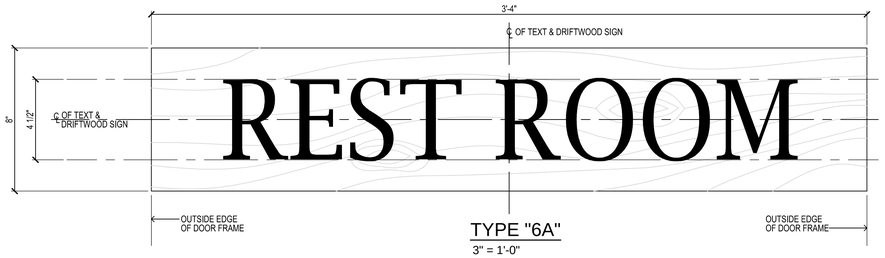

TYPE "6A"
3" = 1'-0"

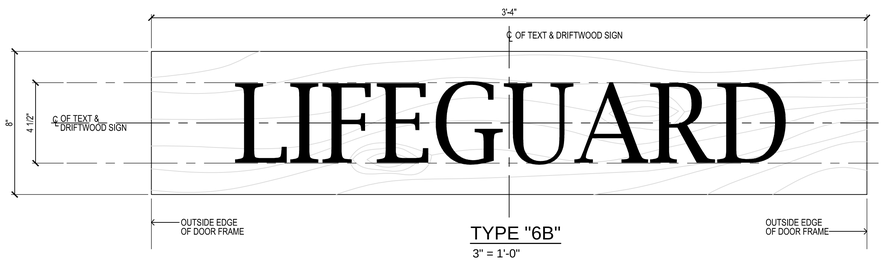

TYPE "6B"
3" = 1'-0"

ADA SIGN TYPES

SCALE: 6" = 1'-0"

REFER TO SPECIFICATION SECTION 10140 FOR MORE INFORMATION - TYPICAL

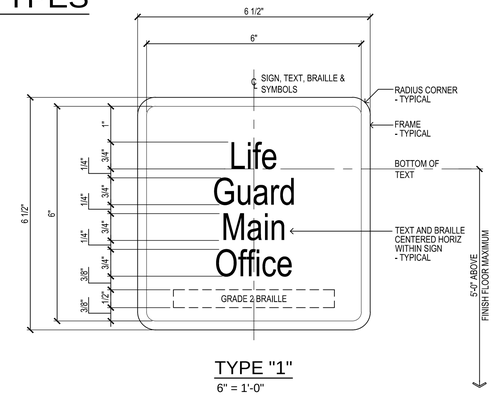

TYPE "1"
6" = 1'-0"

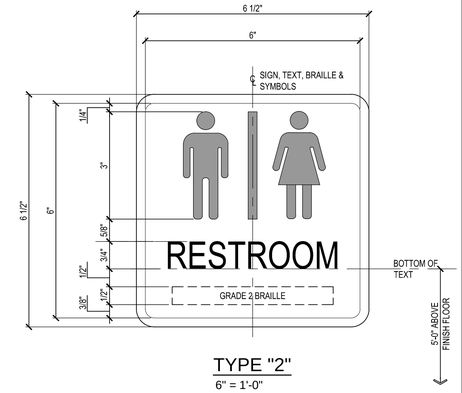

TYPE "2"
6" = 1'-0"

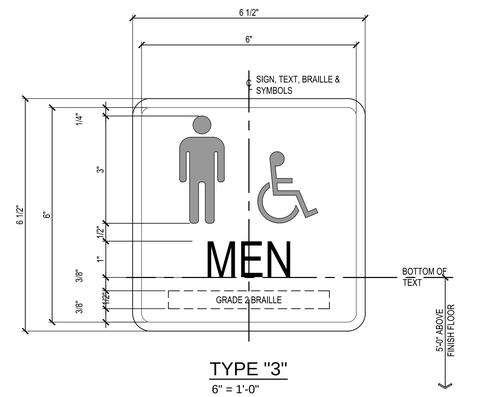

TYPE "3"
6" = 1'-0"

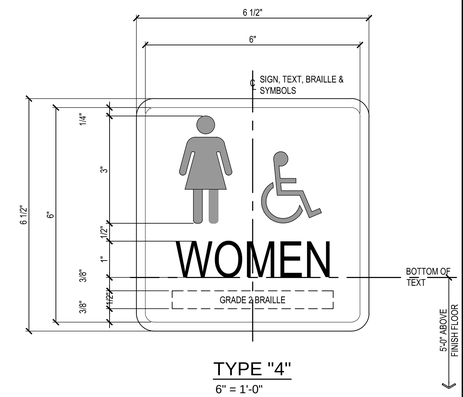

TYPE "4"
6" = 1'-0"

TYPE "5"
FE-3 SIGN
6" = 1'-0"

NOTES:
MATERIAL: 10mm WHITE STYRENE
PRINT: REVERSE PRINTING - PMS 485 RED BACKGROUND WHITE PRINT
14.3mm LETTERS FOR "WARNING"
6.4mm LETTERS FOR WARNING NOTE.
RADIUS CORNERS

SIGNAGE SCHEDULE

ROOM #	ROOM NAME	SIGNAGE TYPE
	MAIN BUILDING	
100	ELEC ROOM	TYPE "1" SIMILAR
101	SINGLE TOILET	TYPE "2" TYPE "6A"
102	CONCESSION KITCHEN	TYPE "1" SIMILAR, TYPE "5" (2), TYPE "6B" SIMILAR
103	PANTRY STORAGE	TYPE "1" SIMILAR
104	CONCESSION PICK-UP	TYPE "6B" SIMILAR (2)
105	SHOWER ROOM	TYPE "3" (2)
105A	JANITOR	TYPE "1" SIMILAR
106	TOILET ROOM	TYPE "3" (2)
107	LOCKERS	TYPE "6B" SIMILAR
108	EXTERIOR HALL	TYPE "6B" SIMILAR (2)
109	SHOWER ROOM	TYPE "4" (2)
109A	JANITOR	TYPE "1" SIMILAR
110	TOILET ROOM	TYPE "4" (2)
111	SINGLE TOILET	TYPE "2" TYPE "6A"
112	NURSE	TYPE "1" SIMILAR (2) TYPE "6B" SIMILAR
112A	NURSE'S TOILET	TYPE "2"
113	LIFEGUARDS	TYPE "1" (2) TYPE "6B"
114	LIFEGUARD'S TOILET	TYPE "2"
	FILTER BUILDING	
100	FILTER ROOM	TYPE "1" SIMILAR TYPE "6B" SIMILAR
101	ELEC ROOM	TYPE "1" SIMILAR
	ENTRY GATE BUILDING	
100	ENTRY GATE OFFICE	TYPE "1" SIMILAR TYPE "6B" SIMILAR

Weston&Sampson®
273 Dividend Road, Rocky Hill, CT 06067
(860) 513-1473 (860) SAMPSON
www.westonandsampson.com

No.	Date	Dr.By	Ck.By	App.By	Description
		A	P	P	R O V E D

DATE: DECEMBER 15, 2015

REGISTERED PROFESSIONAL ENGINEER

STATE OF CONNECTICUT * DANIEL J. TERNEY, III * No. 24893 * LICENSED PROFESSIONAL ENGINEER

TOWN OF GREENWICH – DEPARTMENT OF PUBLIC WORKS
RITCH AVENUE WEST, GREENWICH, CONNECTICUT

BYRAM PARK POOL REPLACEMENT

EXTERIOR & INTERIOR BUILDING SIGNAGE

CADD NO.	SCALE:	CONTRACT:	JOB NO.	DR.BY	DSN.BY	CHK.BY	APP.BY
GREENWICH	VARIES	–	2130336	BPM	BPM	JRC	DGT

FILE NO. A0.01

SHEET – OF –

CONSTRUCTION DOCUMENTS
12/11/15

LIFE-SAFETY LEGEND

EGRESS ACCESS TRAVEL DISTANCES (NON-SPRINKLERED)

USE GROUP	MAXIMUM TRAVEL DISTANCE
B	200 FT

EXIT

FIRE EXTINGUISHER (F1)

EXIT CAPACITY

25 — ACTUAL LOAD
160 — EXIT CAPACITY (BASED ON .2 INCHES/OCC and a 32-inch clear door opening)

BUILDING CODE NARRATIVE

Project Description:

Three new support buildings are proposed for the Byram Park Pool Replacement Project. The multi-purpose main building provides shower and bathroom facilities with outdoor storage lockers for the public, a concessions area with a commercial kitchen serviced by a concessions window, a first aid area and a break room and bathroom facilities for lifeguards and other pool employees. A Filter Building is proposed to house the pool and splash area pumps, filters, mechanical and electrical equipment. A small Entry Building for a single employee will regulate public access to the pool and other park amenities. The buildings are seasonal in nature and will not be heated. The Lifeguards and First Aid rooms and the Concessions Kitchen area will be provided with air conditioning. The commercial kitchen equipment including the exhaust and local fire suppression above the proposed cook top location are not included in this project.

Applicable State Building Codes:

2005 Connecticut State Building Code
a. 2003 International Building Code (IBC)
b. 2005 Connecticut Supplement
c. 2009 Amendments (Effective August 1, 2009)

2003 International Existing Building Code (IEBC)

2003 International Mechanical Code (IMC)

2003 International Plumbing Code (IPC)

2009 International Energy Conservation Code (IECC)

2005 National Electrical Code (NFPA-70)

2010 Accessibility Standards/ADA

ICC/ANSI A117.1-2003 Accessible and Usable Buildings and Facilities

CT. Department of Environmental Protection (DEP)

Aquifer Protection Area Statutes: C.S.G. 22a-354a-bb

State program requiring compliance at the municipal level for protection of public water supply well heads. List of towns with designated well head protection areas can be found on the CT DEP Aquifer Protection Area Program Studies web page. Each municipality is then required to delineate projection areas on their town zoning maps.

Use Groups per Section 304:

Main Building
B: Business with accessory assembly use < 750 SF. Restroom and Shower Facilities, Concessions area, First Aid Station and employee facilities.

Entry Building
B: Business — Park Entry and Exit

Filter Building
B: Business — Pool Equipment and Filter Room

Construction Type per Section 602.5: 5B- Combustible, Unprotected

Height and Area Limits per Table 503: Use Group B

Allowable Height per Table 503: *1 Story-40 feet*
Allowable Area per Table 503: *9,000 SF*

Main Building:
Actual Height: *1 Story- 25 feet to ridge, 33 feet top of cupola*
Actual Area: *3,062 SF*

Entry Building:
Actual Height: *1 Story- 14'-2" to ridge, 18'-10" top of cupola*
Actual Area: *300 GSF*

Filter Building:
Actual Height: *1 Story- 21'-0" to ridge, 26'-00" top of cupola* (average grade)
Actual Area: *684 SF*

Fire Resistance Rating Requirements: Type VB Construction (Table 601 and 602)

Building Element:

Structural Frame (including column, girders, and trusses):	0 Hrs	
Bearing Walls:		
Exterior:	0 Hrs	Based on > 10'-0" Fire Separation distance
Interior:	0 Hrs	
Nonbearing walls and partitions		
Exterior:	0 Hrs	Based on > 10'-0" Fire Separation distance
Nonbearing walls and partitions		
Interior:	0 Hrs	
Floor construction (Including supporting beams and joists):	0 Hrs	
Roof construction:	0 Hrs	

Occupancy Load per table 1004.1.2:

Main Building:		
Concessions Kitchen:	472 SF/200 Gross	= 3 OCC
Business Areas:		
Lifeguard (Accessory Assembly)	315 SF/15 net	= 22 OCC
First Aid Rooms:	128 SF/100 Gross	= 2 OCC
Shower Rooms (2)	128 SF/100 Gross	= 2 OCC
Toilet Rooms (2)		
Entry Building:		
Business Areas:	57 SF/100 Gross	= 1 OCC
Filter Building:		
Mechanical Equipment Room:	684 SF/300 Gross	= 3 OCC

Exit and Access Doorways per section 1014:
None of the proposed spaces has an occupant load greater than 50.

Egress Width for all doors comply with requirements of Table 1005.1

Required distance between Exits or Exit Access doorways per section 1014.2.1:
Not less than 1/2 the length of the maximum overall diagonal of the area served provided each floor.

Maximum Exit Access Travel Distance per table 1015.1
Use Group B: Required= 200 feet non-sprinklered
Provided= < 200 feet

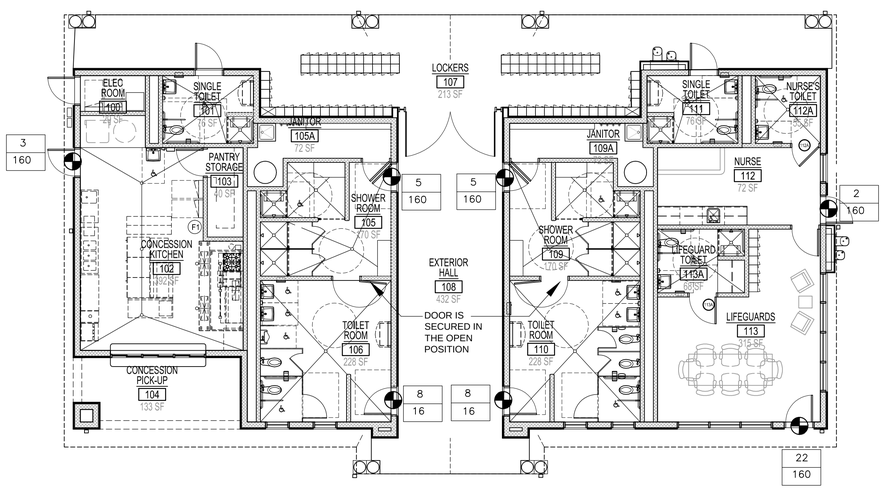

3 MAIN BUILDING 3,062 GSF
SCALE: 1/8" = 1'-0"
USE GROUP B

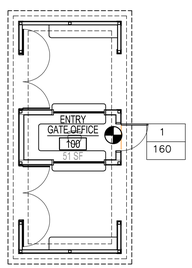

2 ENTRY BUILDING 300 GSF
SCALE: 1/8" = 1'-0"
USE GROUP B

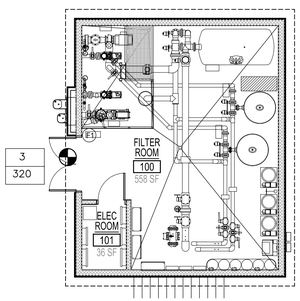

1 FILTER BUILDING 684 GSF
SCALE: 1/8" = 1'-0"
USE GROUP B

0 4' 8' 16'

PROJECT NORTH

Weston&Sampson®
273 Dividend Road, Rocky Hill, CT 06067
(860) 513-1473 (800) SAMPSON
www.westonandsampson.com

No.	Date	Dr.By	Ck.By	App.By	Description
		A	P	P	R O V E D

DECEMBER 15, 2015
REGISTERED PROFESSIONAL ENGINEER
DATE

STATE OF CONNECTICUT ★ DANIEL J. TERNEY, III ★ LICENSED PROFESSIONAL ENGINEER

TOWN OF GREENWICH – DEPARTMENT OF PUBLIC WORKS
RITCH AVENUE WEST, GREENWICH, CONNECTICUT
BYRAM PARK POOL REPLACEMENT

CODE & LIFE SAFETY PLAN

CADD NO.	SCALE:	CONTRACT:	JOB NO.	DR.BY	DSN.BY	CHK.BY	APP.BY
GREENWICH	VARIES	–	2130336	BPM	BPM	JRC	DGT

A0.02

FILE NO.

SHEET – OF –

CONSTRUCTION DOCUMENTS
12/11/15

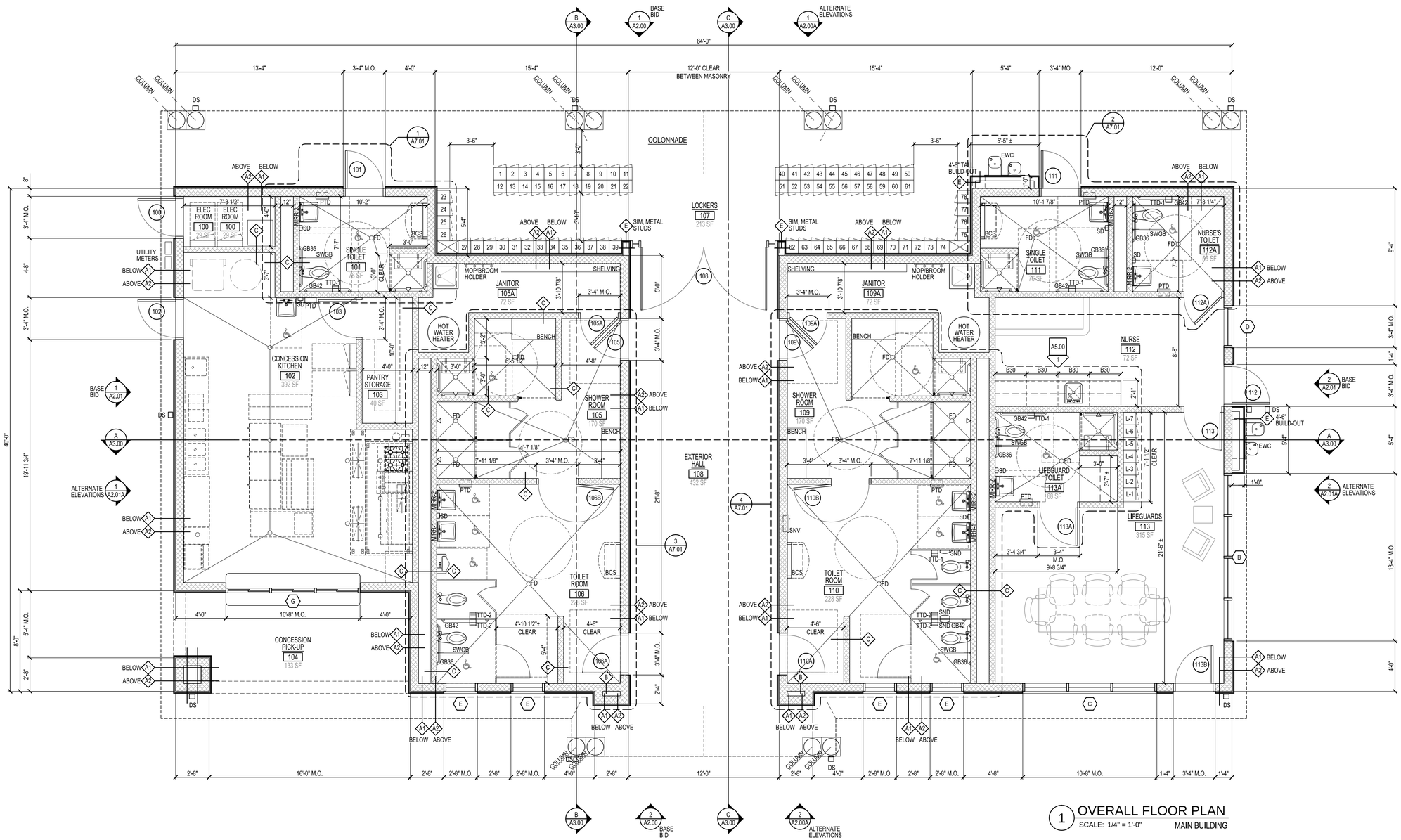

1 OVERALL FLOOR PLAN
SCALE: 1/4" = 1'-0"
MAIN BUILDING

GENERAL FLOOR PLAN NOTE:
FURNITURE AND KITCHEN EQUIPMENT ARE SHOWN DASHED - OUT OF CONTRACT

1/4" = 1'-0" 0 2' 4' 8'

PROJECT NORTH

Weston&Sampson®
273 Dividend Road, Rocky Hill, CT 06067
(860) 513-1473 (800) SAMPSON
www.westonandsampson.com

No.	Date	Dr.By	Ck.By	App.By	Description
		A	P	P	R O V E D

DECEMBER 15, 2015
DATE

REGISTERED PROFESSIONAL ENGINEER

STATE OF CONNECTICUT
GARRETT S. STERNEY III
No. 24,000
LICENSED PROFESSIONAL ENGINEER

TOWN OF GREENWICH – DEPARTMENT OF PUBLIC WORKS
RITCH AVENUE WEST, GREENWICH, CONNECTICUT
BYRAM PARK POOL REPLACEMENT

OVERALL FLOOR PLAN – MAIN BUILDING

CADD NO.	SCALE:	CONTRACT:	JOB NO.	DR.BY	DSN.BY	CHK.BY	APP.BY
GREENWICH	VARIES	–	2130336	BPM	BPM	JRC	DGT

FILE NO. A1.00

SHEET – OF –

CONSTRUCTION DOCUMENTS
12/11/15

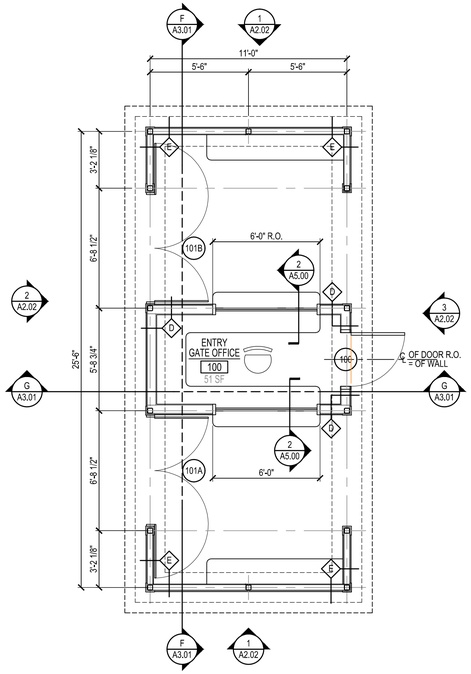

1 OVERALL FLOOR PLAN
SCALE: 1/4" = 1'-0" ENTRY GATE

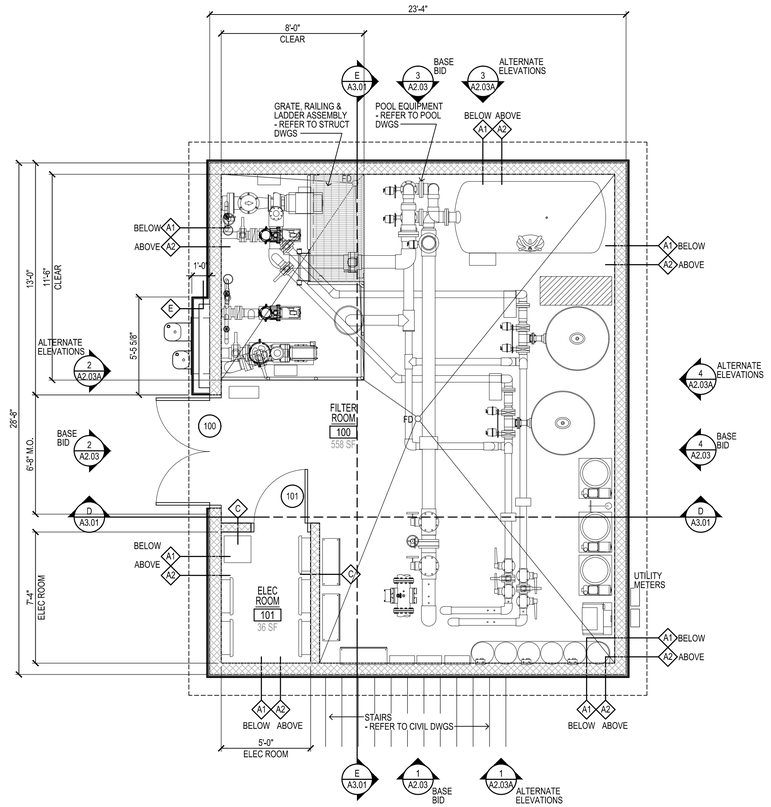

2 OVERALL FLOOR PLAN
SCALE: 1/4" = 1'-0" FILTER BUILDING

1/4" = 1'-0" 0 2' 4' 8'

PROJECT NORTH

Weston&Sampson®
273 Dividend Road, Rocky Hill, CT 06067
(860) 513-1473 (800) SAMPSON
www.westonandsampson.com

No.	Date	Dr.By	Ck.By	App.By	Description
		A	P	P	R O V E D

DECEMBER 15, 2015
REGISTERED PROFESSIONAL ENGINEER DATE

STATE OF CONNECTICUT * DANIEL P. TERNEY III * LICENSED ARCHITECT No.

TOWN OF GREENWICH – DEPARTMENT OF PUBLIC WORKS
RITCH AVENUE WEST, GREENWICH, CONNECTICUT
BYRAM PARK POOL REPLACEMENT
OVERALL FLOOR PLANS
– ENTRY GATE & FILTER BUILDING

CADD NO.	SCALE:	CONTRACT:	JOB NO.	DR.BY	DSN.BY	CHK.BY	APP.BY
GREENWICH	VARIES	–	2130336	BPM	BPM	JRC	DGT

FILE NO. A1.01

SHEET – OF –

CEILING LEGEND

GYPSUM BOARD CEILING ON 1x3 WOOD FURRING	2'-0" x 2'-0" RECESSED LIGHT FIXTURE - SEE ELEC DRAWINGS
8'-0" DENOTES CEILING HEIGHT	STRIP LIGHT - SEE ELEC DRAWINGS
SUPPLY AIR REGISTER - SEE HVAC DWGS	PENDANT LIGHT FIXTURE - SEE ELECTRICAL DWGS
RETURN AIR REGISTER - SEE HVAC DWGS	EXTERIOR LIGHT FIXTURE - SEE ELECTRICAL DWGS
EXHAUST VENT - SEE HVAC DWGS	EMERGENCY LIGHT FIXTURE - SEE ELECTRICAL DWGS
PVC BEAD BOARD	EXIT LIGHT FIXTURE - SEE ELECTRICAL DWGS

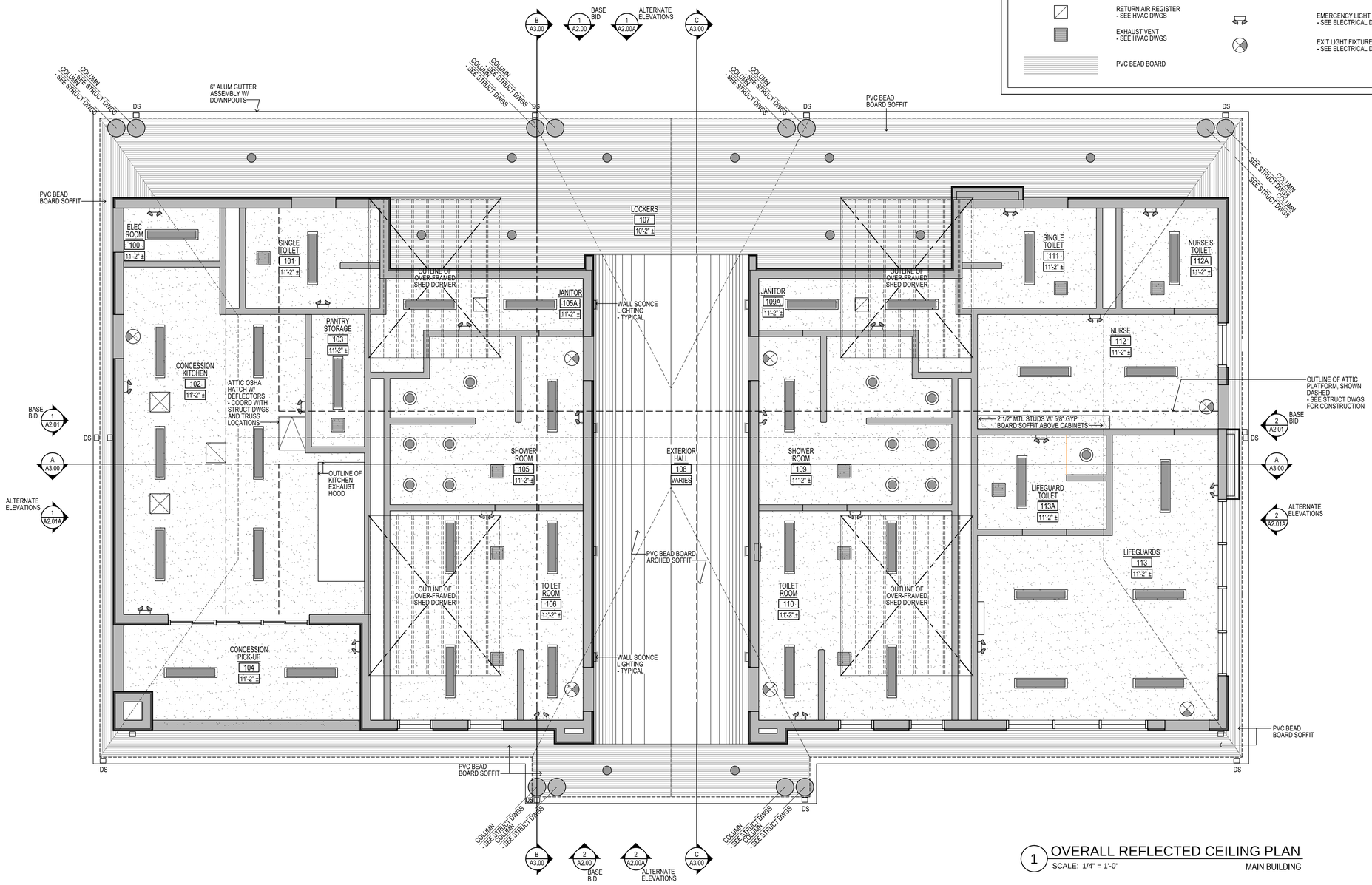

1 OVERALL REFLECTED CEILING PLAN
SCALE: 1/4" = 1'-0"
MAIN BUILDING

CONSTRUCTION DOCUMENTS
12/11/15

1/4" = 1'-0" 0 2' 4' 8'

PROJECT NORTH

WestonandSampson®
273 Dividend Road, Rocky Hill, CT 06067
(860) 513-1473 (800) SAMPSON
www.westonandsampson.com

No.	Date	Dr.By	Ck.By	App.By	Description	DATE
		A	P	P	R O V E D	DECEMBER 15, 2015

REGISTERED PROFESSIONAL ENGINEER

STATE OF CONNECTICUT DANIEL J. TERNEY III LICENSED ARCHITECT

TOWN OF GREENWICH – DEPARTMENT OF PUBLIC WORKS
RITCH AVENUE WEST, GREENWICH, CONNECTICUT
BYRAM PARK POOL REPLACEMENT

OVERALL REFLECTED CEILING PLAN – MAIN BUILDING

CADD NO.	SCALE:	CONTRACT:	JOB NO.	DR.BY	DSN.BY	CHK.BY	APP.BY
GREENWICH	VARIES	–	21303.36	BPM	BPM	JRC	DGT

FILE NO.

A1.02

SHEET – OF –

CEILING LEGEND

GYPSUM BOARD CEILING ON 1x3 WOOD FURRING	2'-0" x 2'-0" RECESSED LIGHT FIXTURE - SEE ELEC DRAWINGS
	STRIP LIGHT - SEE ELEC DRAWINGS
8'-0" DENOTES CEILING HEIGHT	PENDANT LIGHT FIXTURE - SEE ELECTRICAL DWGS
SUPPLY AIR REGISTER - SEE HVAC DWGS	EXTERIOR LIGHT FIXTURE - SEE ELECTRICAL DWGS
RETURN AIR REGISTER - SEE HVAC DWGS	EMERGENCY LIGHT FIXTURE - SEE ELECTRICAL DWGS
EXHAUST VENT - SEE HVAC DWGS	EXIT LIGHT FIXTURE - SEE ELECTRICAL DWGS
PVC BEAD BOARD	

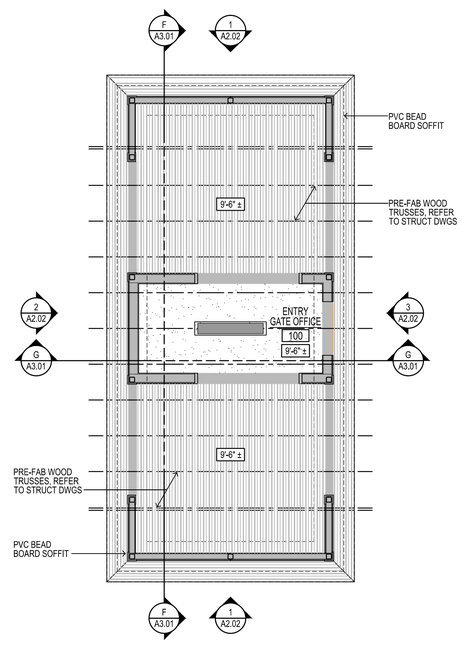

1 OVERALL REFLECTED CEILING PLAN
SCALE: 1/4" = 1'-0"
ENTRY BUILDING

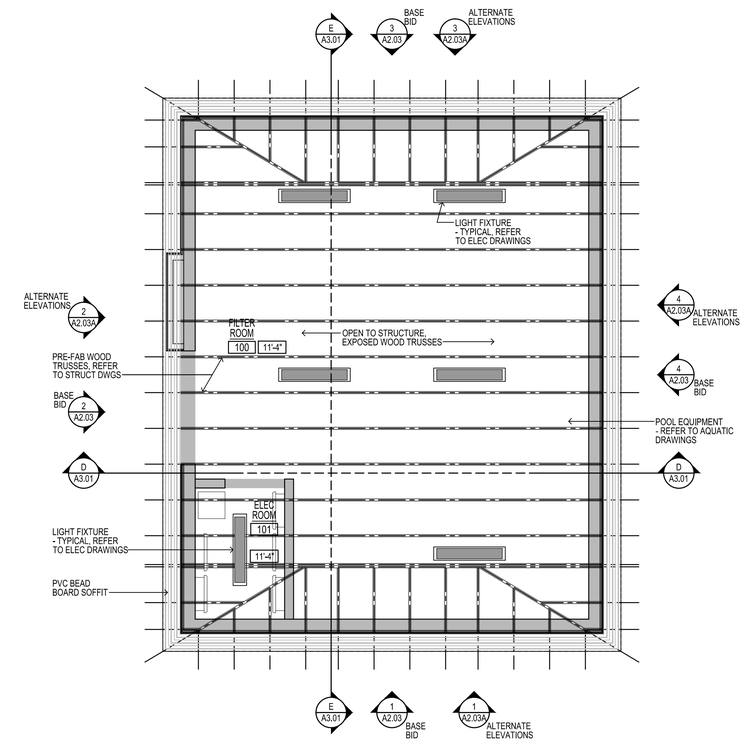

2 OVERALL REFLECTED CEILING PLAN
SCALE: 1/4" = 1'-0"
FILTER BUILDING

CONSTRUCTION DOCUMENTS
12/11/15

1/4" = 1'-0" 0 2' 4' 8'

PROJECT NORTH

Weston&Sampson®
273 Dividend Road, Rocky Hill, CT 06067
(860) 513-1473 (800) SAMPSON
www.westonandsampson.com

No.	Date	Dr.By	Ck.By	App.By	Description

A P P R O V E D

DECEMBER 15, 2015
DATE

REGISTERED PROFESSIONAL ENGINEER

STATE OF CONNECTICUT ★ DANIEL P. TERNEY III ★ LICENSED ARCHITECT No.

TOWN OF GREENWICH – DEPARTMENT OF PUBLIC WORKS
RITCH AVENUE WEST, GREENWICH, CONNECTICUT
BYRAM PARK POOL REPLACEMENT

OVERALL REFLECTED CEILING PLANS – ENTRY GATE & FILTER BUILDING

CADD NO.	SCALE:	CONTRACT:	JOB NO.	DR.BY	DSN.BY	CHK.BY	APP.BY
GREENWICH	VARIES	–	2130336	BPM	BPM	JRC	DGT

FILE NO.

A1.03

SHEET – OF –

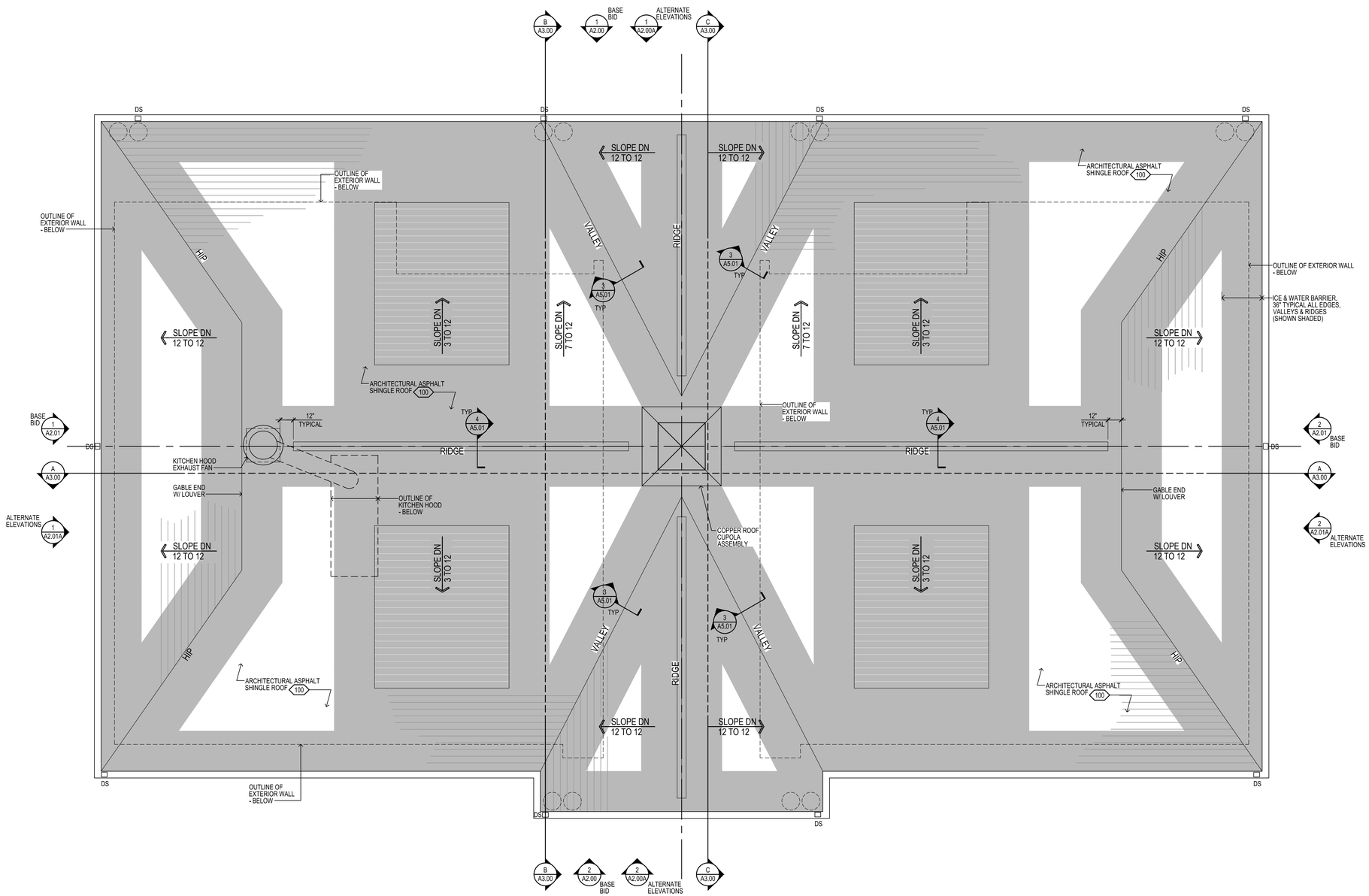

1 OVERALL ROOF PLAN
SCALE: 1/4" = 1'-0" MAIN BUILDING

0 2' 4' 8'
1/4" = 1'-0"

PROJECT NORTH

CONSTRUCTION DOCUMENTS
12/11/15

Weston&Sampson®
273 Dividend Road, Rocky Hill, CT 06067
(860) 513-1473 (800) SAMPSON
www.westonandsampson.com

No.	Date	Dr.By	Ck.By	App.By	Description
		A	P	P	R O V E D

DECEMBER 15, 2015
DATE

REGISTERED PROFESSIONAL ENGINEER

STATE OF CONNECTICUT * DANIEL J. TERNEY III * LICENSED PROFESSIONAL ENGINEER

TOWN OF GREENWICH – DEPARTMENT OF PUBLIC WORKS
RITCH AVENUE WEST, GREENWICH, CONNECTICUT
BYRAM PARK POOL REPLACEMENT

OVERALL ROOF PLAN – MAIN BUILDING

CADD NO.	SCALE:	CONTRACT:	JOB NO.	DR.BY	DSN.BY	CHK.BY	APP.BY
GREENWICH	VARIES	–	2130336	BPM	BPM	JRC	DGT

FILE NO.

A1.04

SHEET – OF –

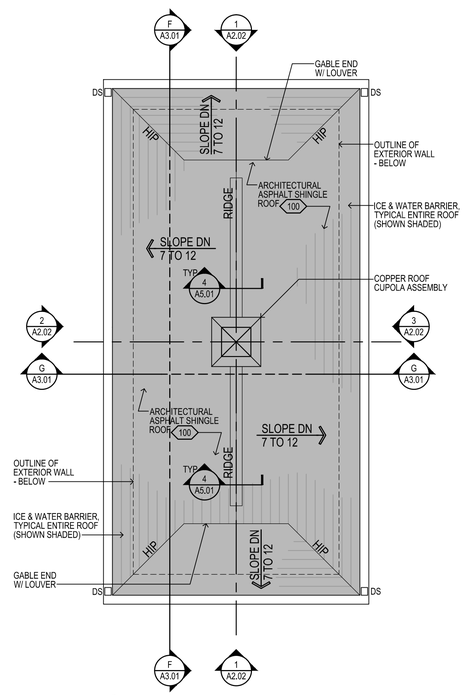

2 OVERALL ROOF PLAN
SCALE: 1/4" = 1'-0" ENTRY BUILDING

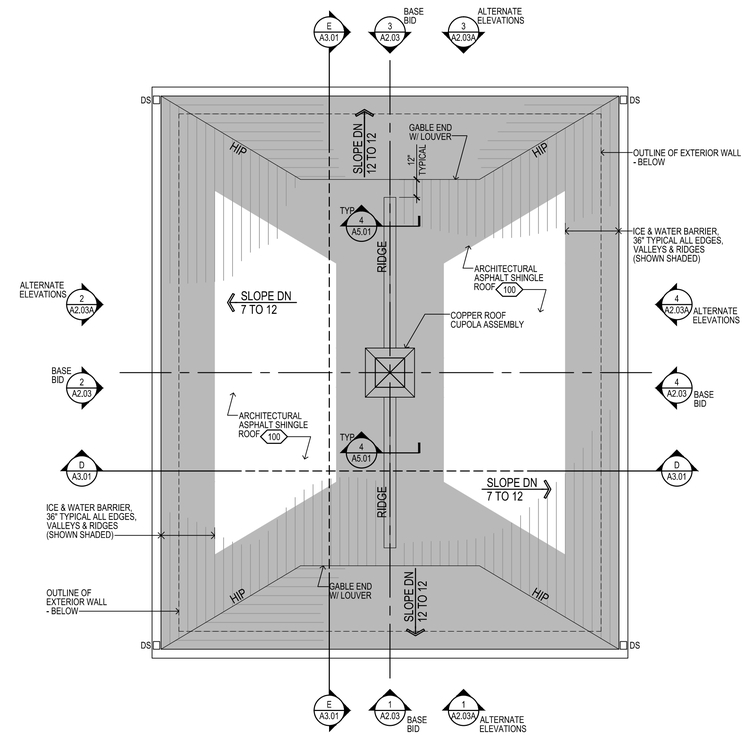

1 OVERALL ROOF PLAN
SCALE: 1/4" = 1'-0" FILTER BUILDING

1/4" = 1'-0" 0 2' 4' 8'

PROJECT NORTH

CONSTRUCTION DOCUMENTS
12/11/15

Weston&Sampson®
273 Dividend Road, Rocky Hill, CT 06067
(860) 513-1473 (800) SAMPSON
www.westonandsampson.com

No.	Date	Dr.By	Ck.By	App.By	Description
		A	P	P	R O V E D

DECEMBER 15, 2015
REGISTERED PROFESSIONAL ENGINEER
DATE

STATE OF CONNECTICUT ★ DANIEL J. TIERNEY III ★ LICENSED ARCHITECT

TOWN OF GREENWICH – DEPARTMENT OF PUBLIC WORKS
RITCH AVENUE WEST, GREENWICH, CONNECTICUT
BYRAM PARK POOL REPLACEMENT
OVERALL ROOF PLANS
– ENTRY GATE & FILTER BUILDING

CADD NO.	SCALE:	CONTRACT:	JOB NO.	DR.BY	DSN.BY	CHK.BY	APP.BY
GREENWICH	VARIES	–	21303.36	BPM	BPM	JRC	DGT

A1.05
FILE NO.

SHEET – OF –

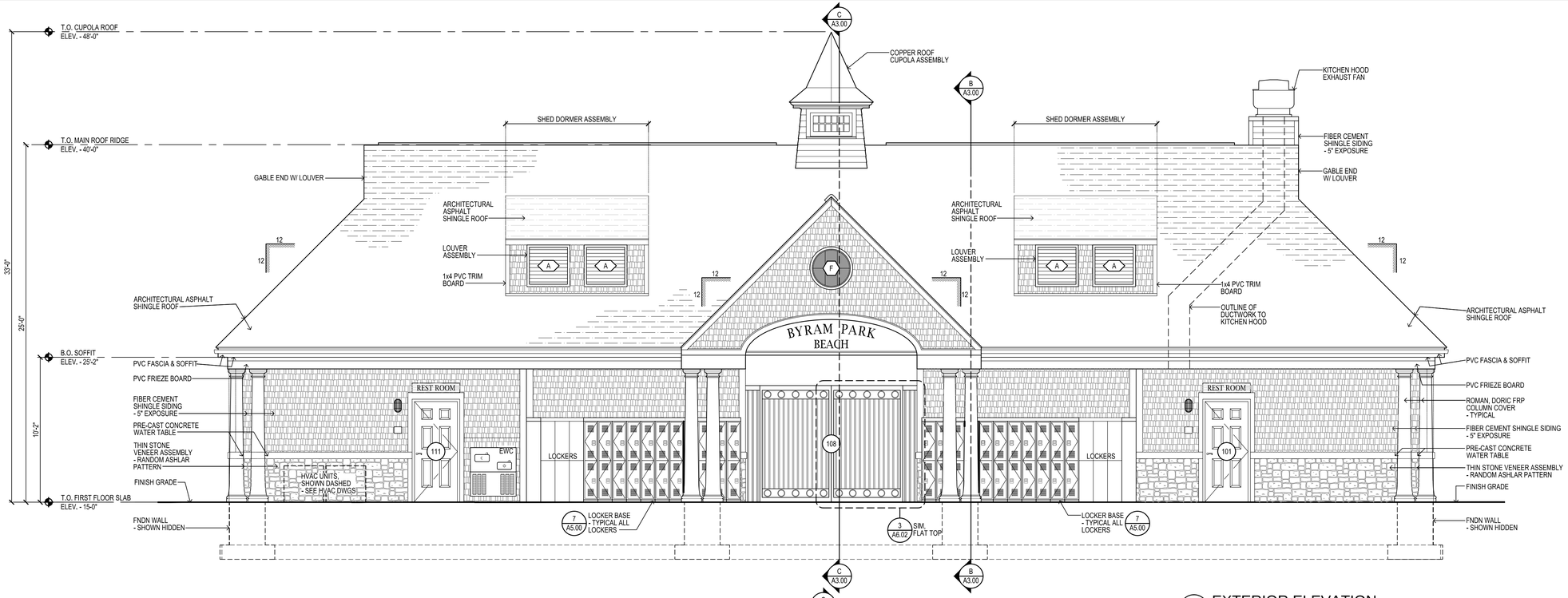

1 EXTERIOR ELEVATION
SCALE: 1/4" = 1'-0" MAIN BUILDING

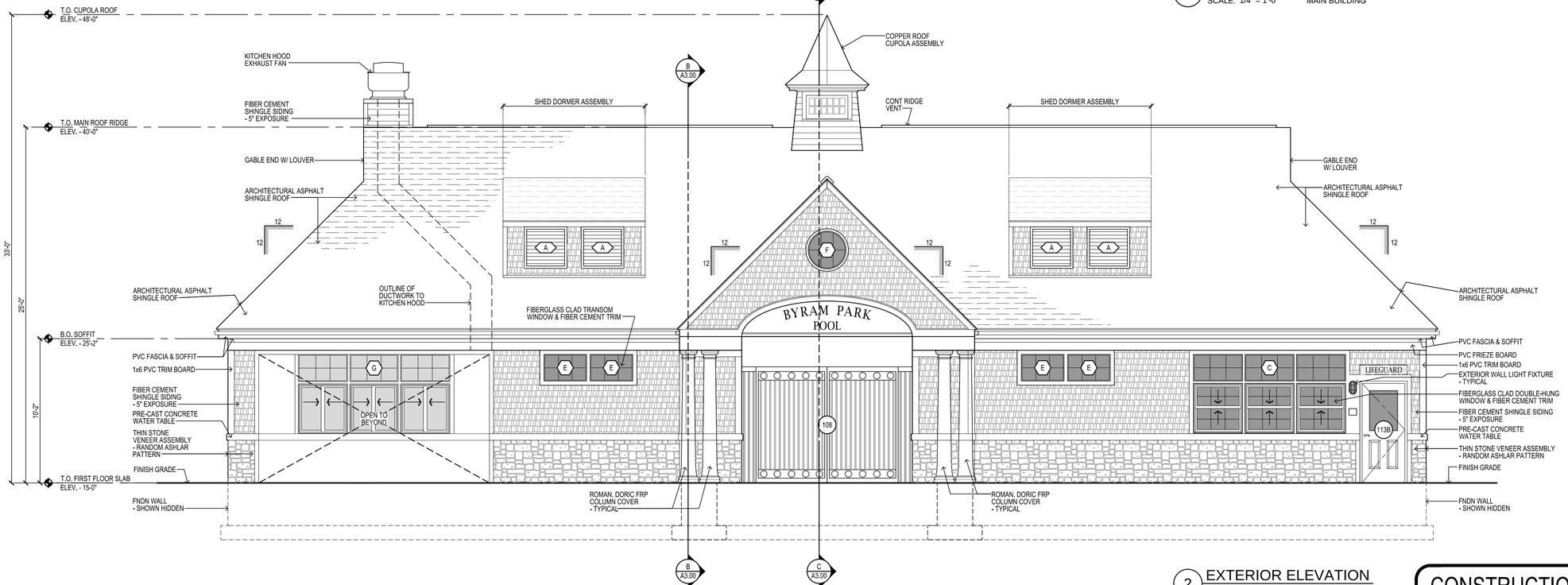

2 EXTERIOR ELEVATION
SCALE: 1/4" = 1'-0" MAIN BUILDING

1/4" = 1'-0" 0 2' 4' 8'

CONSTRUCTION DOCUMENTS
12/11/15

Weston&Sampson®
273 Dividend Road, Rocky Hill, CT 06067
(860) 513-1473 (800) SAMPSON
www.westonandsampson.com

No.	Date	Dr.By	Ck.By	App.By	Description	DATE
		A	P	P	R O V E D	DECEMBER 15, 2015

REGISTERED PROFESSIONAL ENGINEER

STATE OF CONNECTICUT * DANIEL J. VERNEY III * LICENSED PROFESSIONAL ENGINEER

TOWN OF GREENWICH – DEPARTMENT OF PUBLIC WORKS
RITCH AVENUE WEST, GREENWICH, CONNECTICUT
BYRAM PARK POOL REPLACEMENT

EXTERIOR ELEVATIONS – MAIN BUILDING

CADD NO.	SCALE:	CONTRACT:	JOB NO.	DR.BY	DSN.BY	CHK.BY	APP.BY
GREENWICH	VARIES	–	2130336	BPM	BPM	JRC	DGT

FILE NO.

A2.00

SHEET – OF –

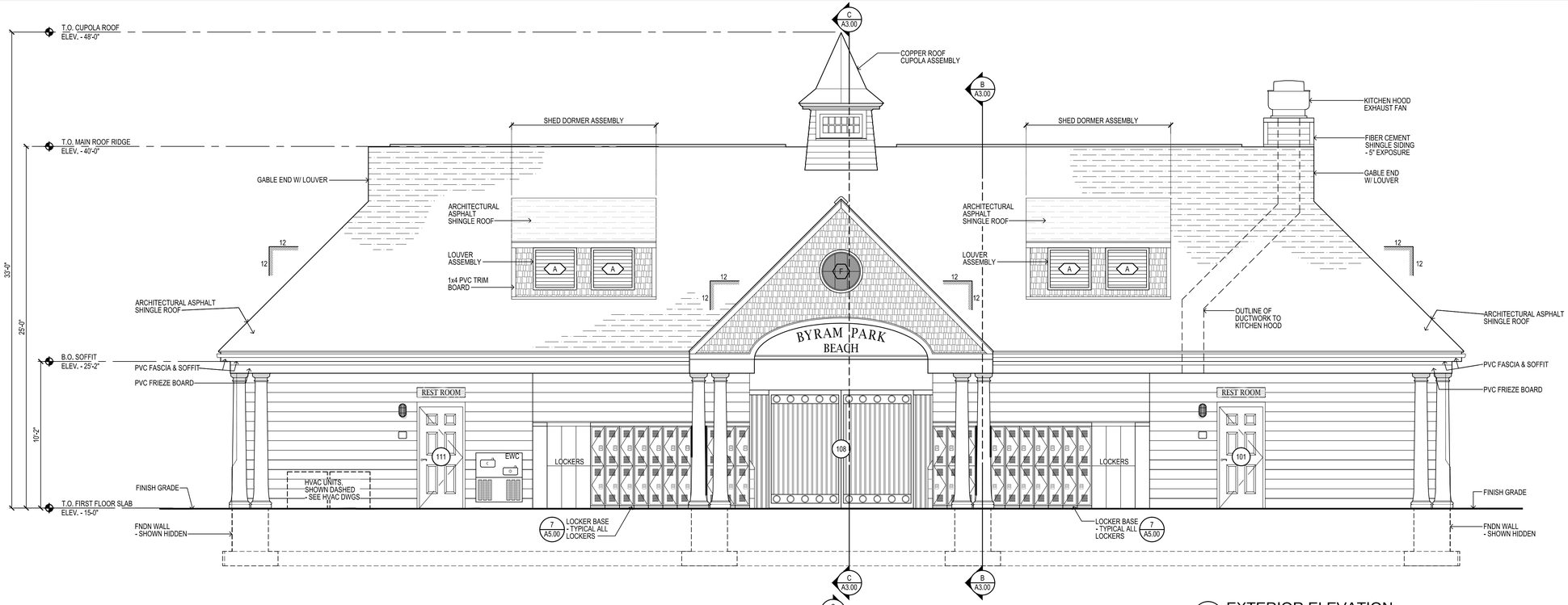

1 EXTERIOR ELEVATION
SCALE: 1/4" = 1'-0" MAIN BUILDING

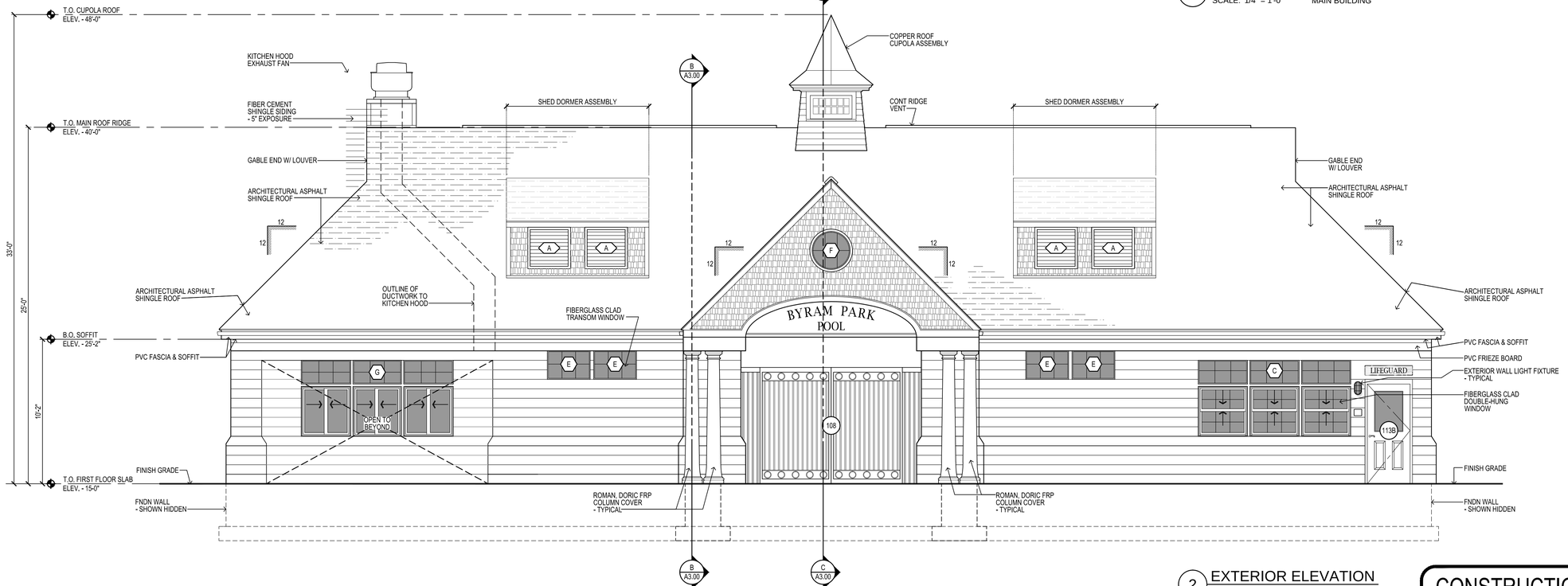

2 EXTERIOR ELEVATION
SCALE: 1/4" = 1'-0" MAIN BUILDING

1/4" = 1'-0" 0 2' 4' 8'

CONSTRUCTION DOCUMENTS
12/11/15

Weston&Sampson®
273 Dividend Road, Rocky Hill, CT 06067
(860) 513-1473 (800) SAMPSON
www.westonandsampson.com

No.	Date	Dr.By	Ct.By	App.By	Description
		A	P	P	R O V E D

DECEMBER 15, 2015
DATE

REGISTERED PROFESSIONAL ENGINEER

STATE OF CONNECTICUT ★ DANIEL P. TERNEY III ★ LICENSED ARCHITECT

TOWN OF GREENWICH – DEPARTMENT OF PUBLIC WORKS
RITCH AVENUE WEST, GREENWICH, CONNECTICUT
BYRAM PARK POOL REPLACEMENT

EXTERIOR ELEVATIONS – MAIN BUILDING – ALTERNATE

CADD NO.	SCALE:	CONTRACT:	JOB NO.	DR.BY	DSN.BY	CHK.BY	APP.BY
GREENWICH	VARIES	–	2130336	BPM	BPM	JRC	DGT

A2.00A

FILE NO.

SHEET – OF –

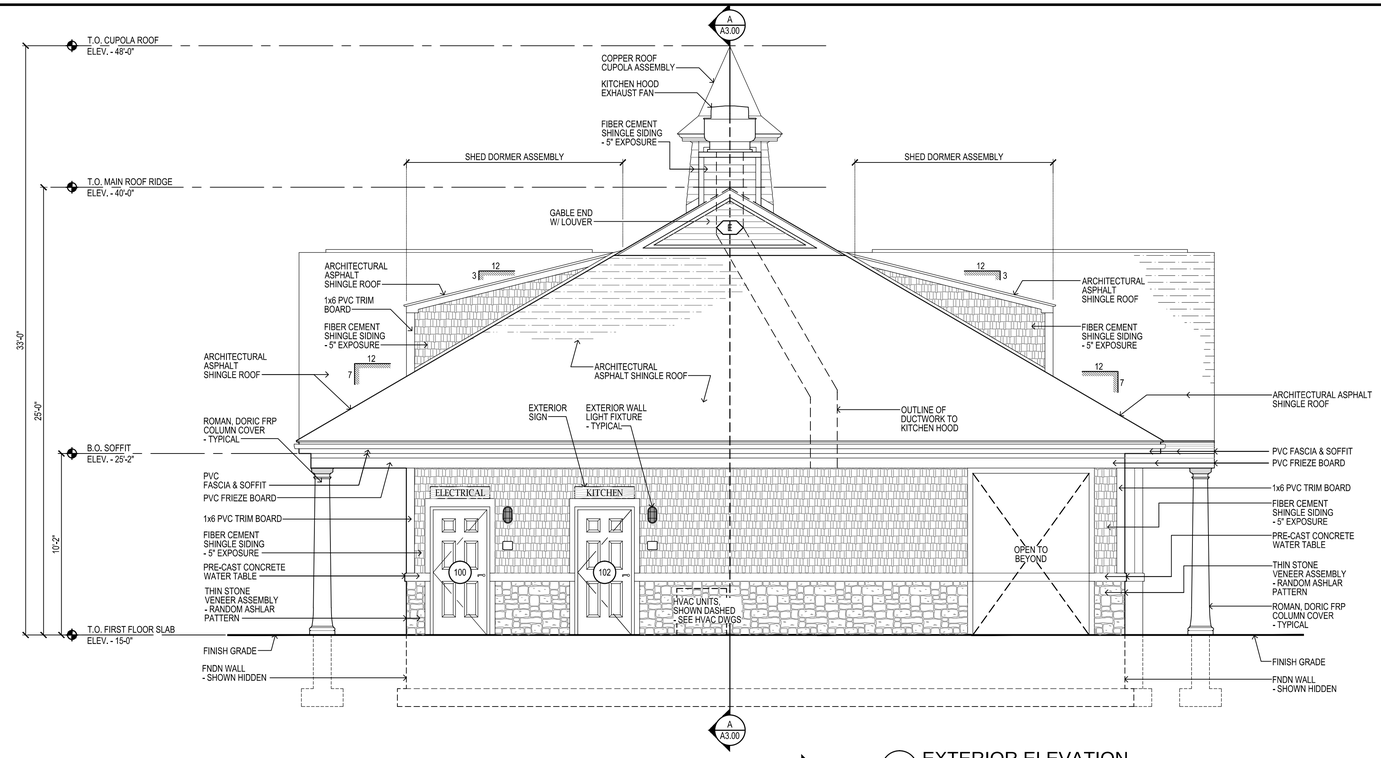

1 EXTERIOR ELEVATION
SCALE: 1/4" = 1'-0" MAIN BUILDING

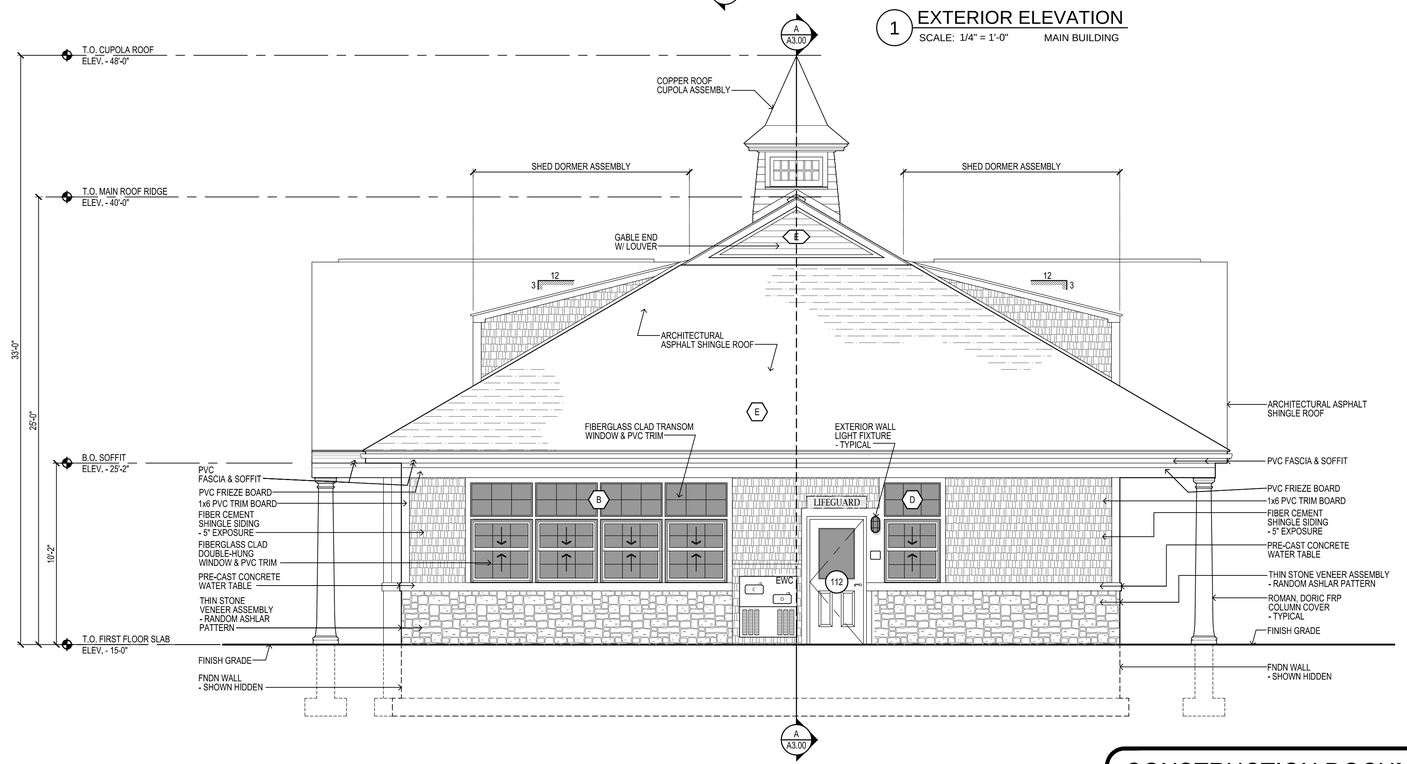

2 EXTERIOR ELEVATION
SCALE: 1/4" = 1'-0" MAIN BUILDING

0 2' 4' 8'
1/4" = 1'-0"

CONSTRUCTION DOCUMENTS
12/11/15

Weston&Sampson®
273 Dividend Road, Rocky Hill, CT 06067
(860) 513-1473 (800) SAMPSON
www.westonandsampson.com

No.	Date	Dr.By	Ck.By	App.By	Description
		A	P	P	R O V E D

DECEMBER 15, 2015
DATE

REGISTERED PROFESSIONAL ENGINEER

STATE OF CONNECTICUT ★ DANIEL J. TERNEY III ★ No. 22822 ★ LICENSED ARCHITECT

TOWN OF GREENWICH – DEPARTMENT OF PUBLIC WORKS
RITCH AVENUE WEST, GREENWICH, CONNECTICUT
BYRAM PARK POOL REPLACEMENT

EXTERIOR ELEVATIONS – MAIN BUILDING

CADD NO.	SCALE:	CONTRACT:	JOB NO.	DR.BY	DSN.BY	CHK.BY	APP.BY
GREENWICH	VARIES	–	2130336	BPM	BPM	JRC	DGT

A2.01
FILE NO.

SHEET – OF –

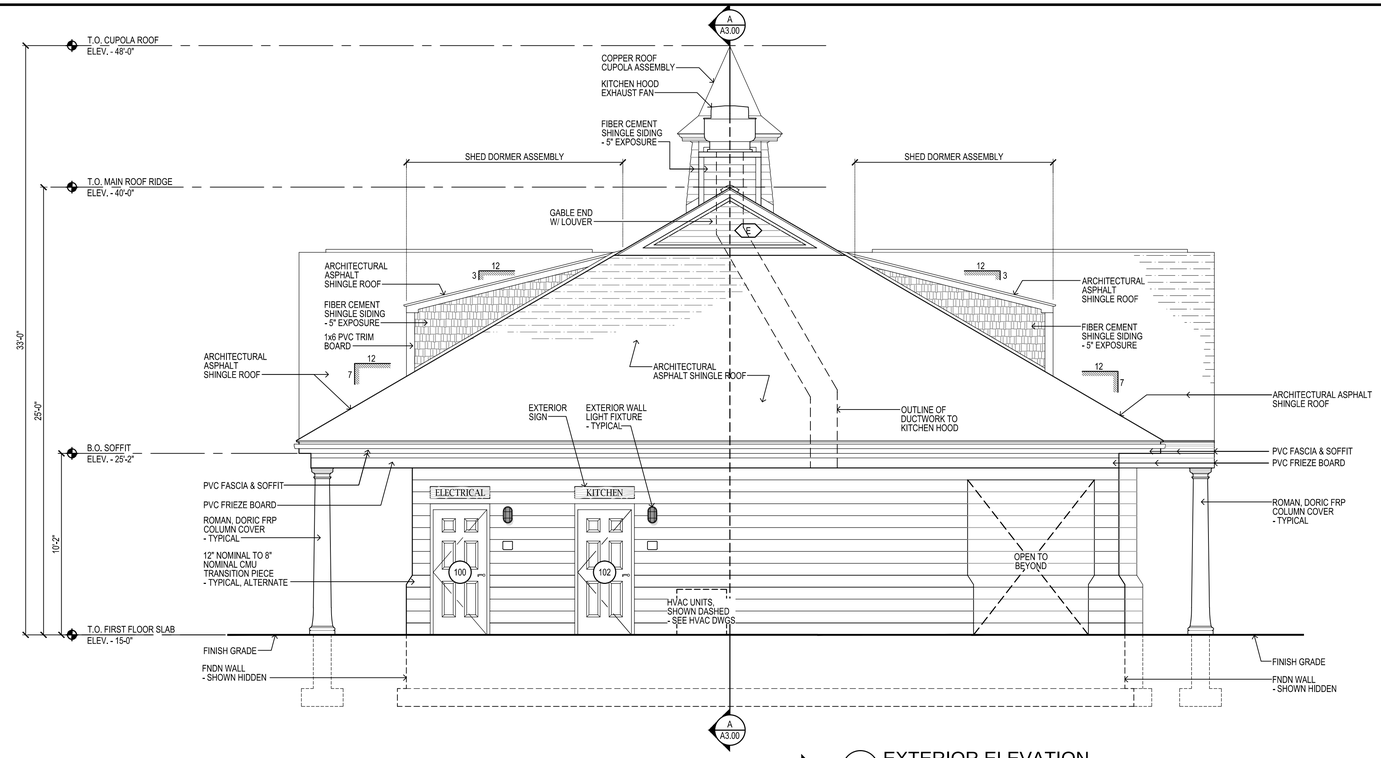

1 EXTERIOR ELEVATION
SCALE: 1/4" = 1'-0" MAIN BUILDING

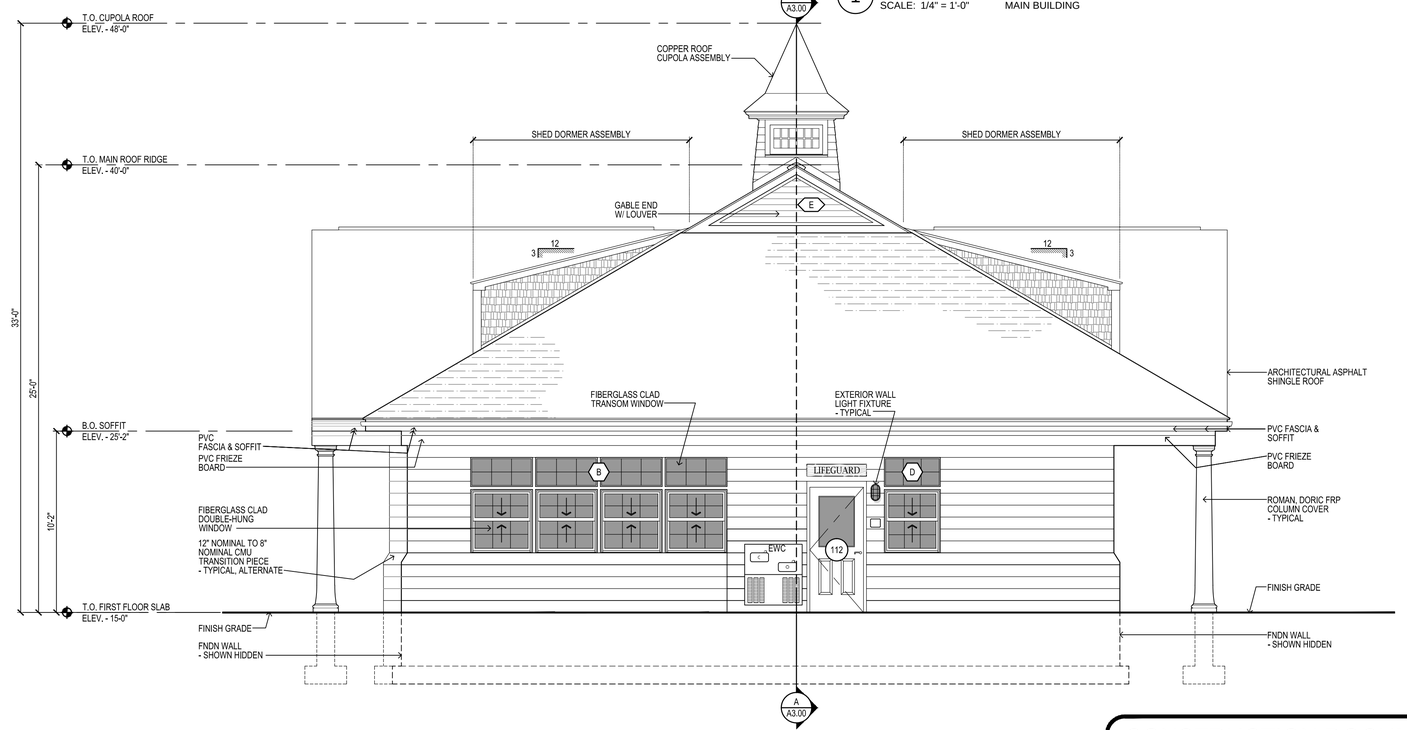

2 EXTERIOR ELEVATION
SCALE: 1/4" = 1'-0" MAIN BUILDING

0 2' 4' 8'
1/4" = 1'-0"

CONSTRUCTION DOCUMENTS
12/11/15

Weston&Sampson®
273 Dividend Road, Rocky Hill, CT 06067
(860) 513-1473 (800) SAMPSON
www.westonandsampson.com

No.	Date	Dr.By	Ck.By	App.By	Description
		A	P	P	R O V E D

DECEMBER 15, 2015
DATE

REGISTERED PROFESSIONAL ENGINEER

STATE OF CONNECTICUT ★ DANIEL J. TERNEY III ★ LICENSED ARCHITECT No.

TOWN OF GREENWICH – DEPARTMENT OF PUBLIC WORKS
RITCH AVENUE WEST, GREENWICH, CONNECTICUT
BYRAM PARK POOL REPLACEMENT

EXTERIOR ELEVATIONS – MAIN BUILDING – ALTERNATE

CADD NO.	SCALE:	CONTRACT:	JOB NO.	DR.BY	DSN.BY	CHK.BY	APP.BY
GREENWICH	VARIES	–	2130336	BPM	BPM	JRC	DGT

FILE NO. A2.01A

SHEET – OF –

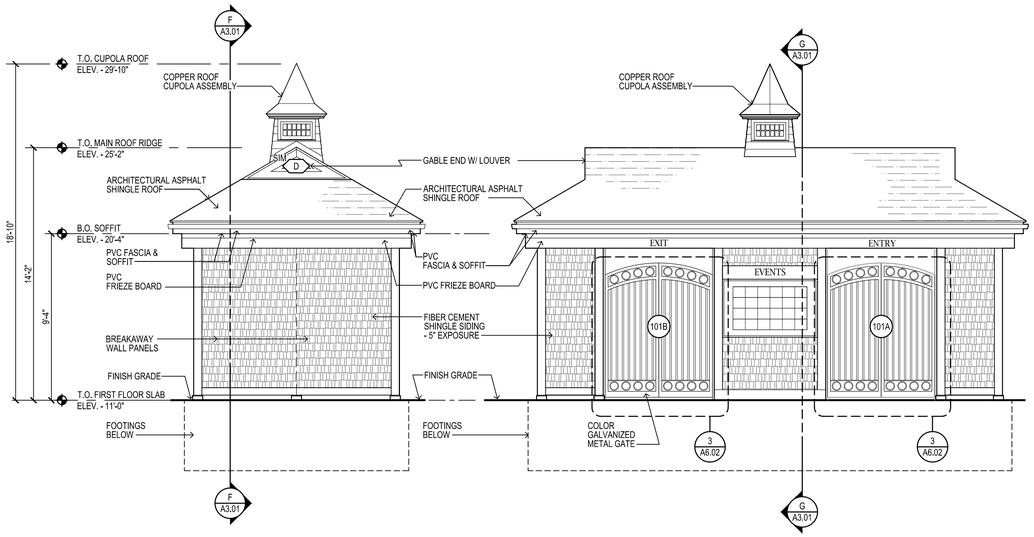

1 EXTERIOR ELEVATION
SCALE: 1/4" = 1'-0" ENTRY GATE

2 EXTERIOR ELEVATION
SCALE: 1/4" = 1'-0" ENTRY GATE

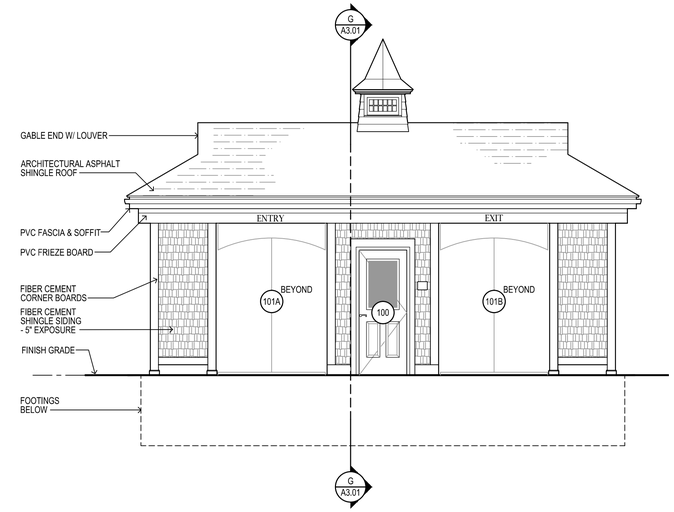

3 EXTERIOR ELEVATION
SCALE: 1/4" = 1'-0" ENTRY GATE

GENERAL NOTE:
THE EXTERIOR WALLS WILL BE CONSTRUCTED FOLLOWING FEMA TECHNICAL BULLETIN 9 FOR BREAK AWAY WALLS

CONSTRUCTION DOCUMENTS
12/11/15

1/4" = 1'-0" 0 2' 4' 8'

Weston&Sampson®
273 Dividend Road, Rocky Hill, CT 06067
(860) 513-1473 (800) SAMPSON
www.westonandsampson.com

No.	Date	Dr.By	Ck.By	App.By	Description

A P P R O V E D
DECEMBER 15, 2015
DATE
REGISTERED PROFESSIONAL ENGINEER

STATE OF CONNECTICUT ★ DANIEL J. TERNEY III ★ LICENSED ARCHITECT No.

TOWN OF GREENWICH – DEPARTMENT OF PUBLIC WORKS
RITCH AVENUE WEST, GREENWICH, CONNECTICUT
BYRAM PARK POOL REPLACEMENT

EXTERIOR ELEVATION – ENTRY GATE

CADD NO.	SCALE:	CONTRACT:	JOB NO.	DR.BY	DSN.BY	CHK.BY	APP.BY
GREENWICH	VARIES	–	2130336	BPM	BPM	JRC	DGT

A2.02

FILE NO.

SHEET – OF –

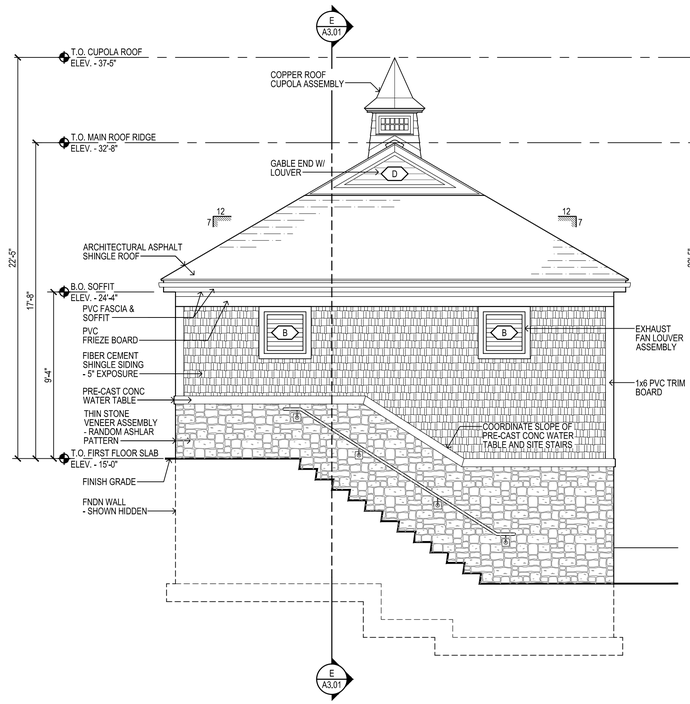

1 EXTERIOR ELEVATION
SCALE: 1/4" = 1'-0" FILTER BUILDING

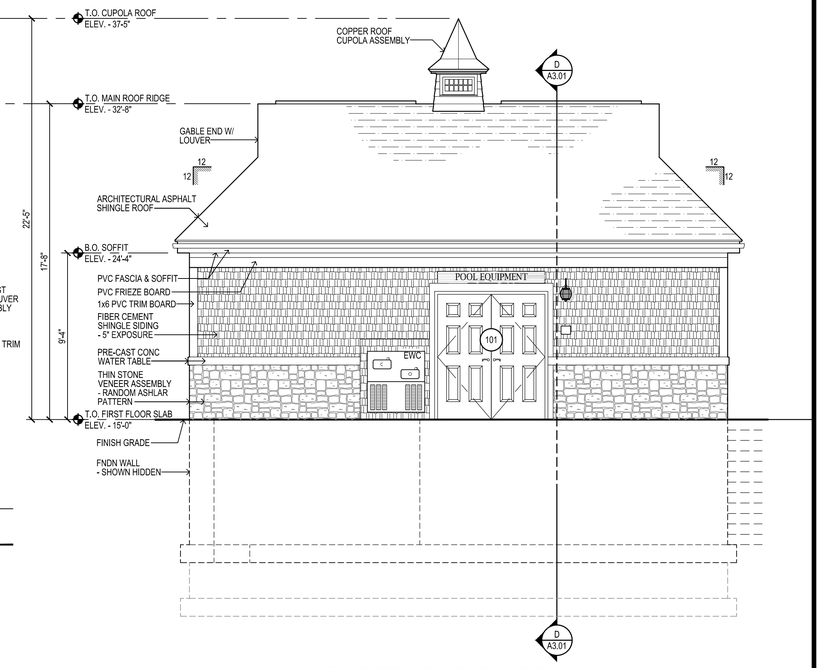

2 EXTERIOR ELEVATION
SCALE: 1/4" = 1'-0" FILTER BUILDING

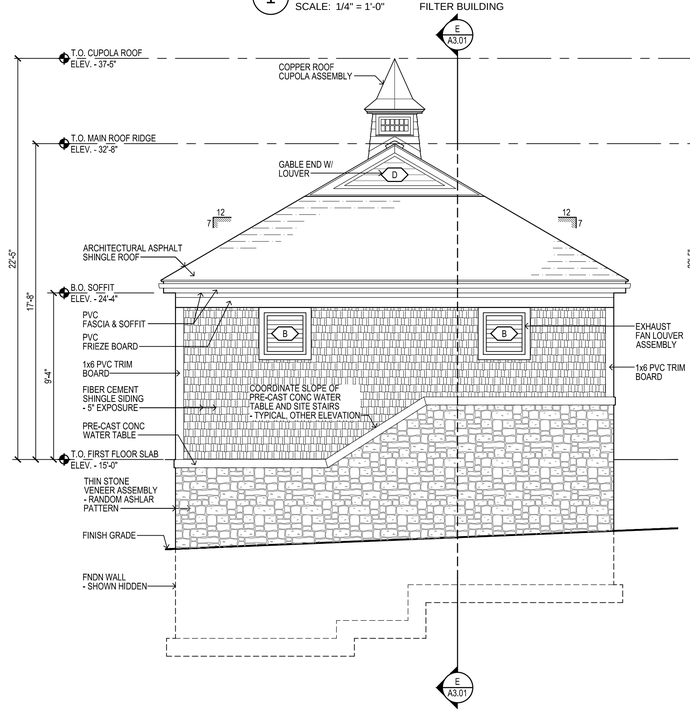

3 EXTERIOR ELEVATION
SCALE: 1/4" = 1'-0" FILTER BUILDING

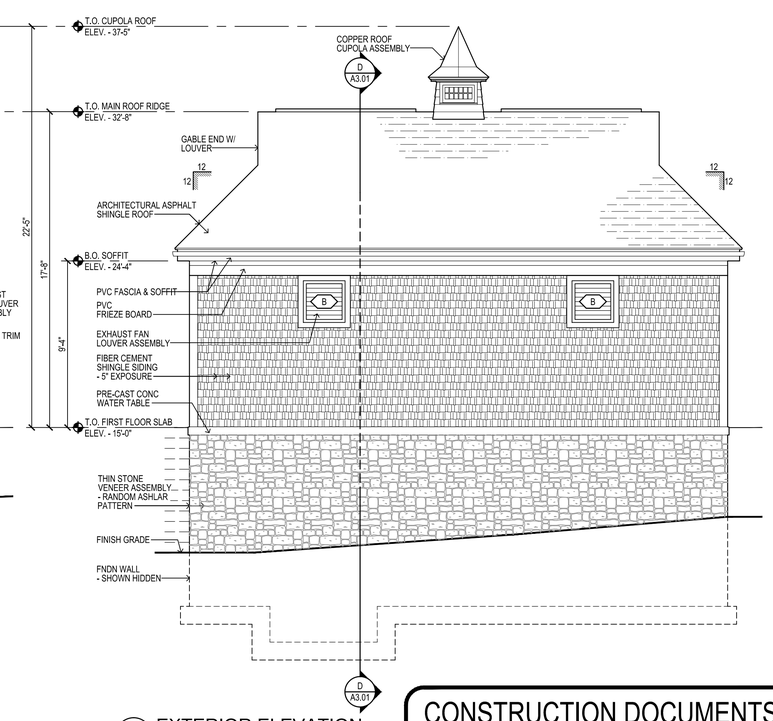

4 EXTERIOR ELEVATION
SCALE: 1/4" = 1'-0" FILTER BUILDING

1/4" = 1'-0" 0 2' 4' 8'

CONSTRUCTION DOCUMENTS
12/11/15

Weston&Sampson®
273 Dividend Road, Rocky Hill, CT 06067
(860) 513-1473 (800) SAMPSON
www.westonandsampson.com

No.	Date	Dr.By	Ck.By	App.By	Description
		A	P	P	R O V E D

DECEMBER 15, 2015
DATE

REGISTERED PROFESSIONAL ENGINEER

STATE OF CONNECTICUT ★ DANIEL P. TERNEY III ★ No. 22826 ★ LICENSED ARCHITECT

TOWN OF GREENWICH – DEPARTMENT OF PUBLIC WORKS
RITCH AVENUE WEST, GREENWICH, CONNECTICUT
BYRAM PARK POOL REPLACEMENT

EXTERIOR ELEVATIONS – FILTER BUILDING

CADD NO.	SCALE:	CONTRACT:	JOB NO.	DR.BY	DSN.BY	CHK.BY	APP.BY
GREENWICH	VARIES	–	2130336	BPM	BPM	JRC	DGT

A2.03
FILE NO.

SHEET – OF –

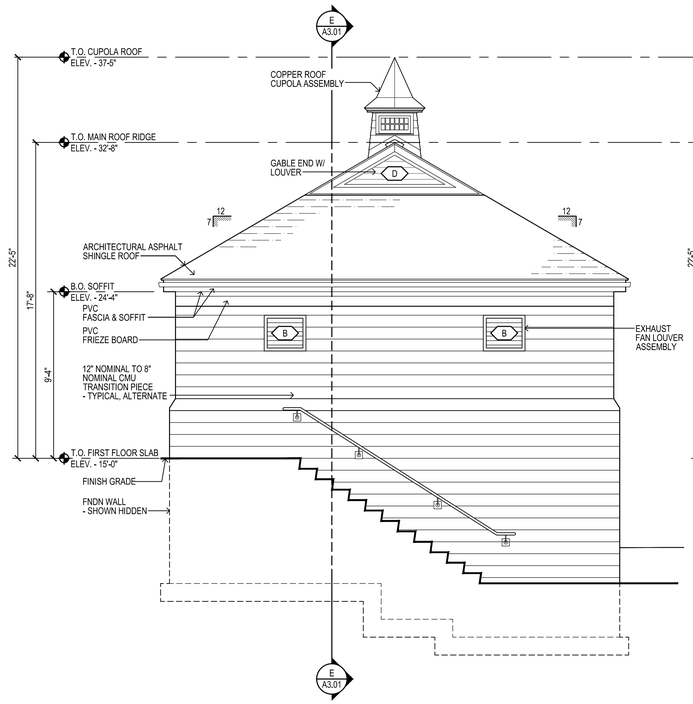

1 EXTERIOR ELEVATION
SCALE: 1/4" = 1'-0" FILTER BUILDING

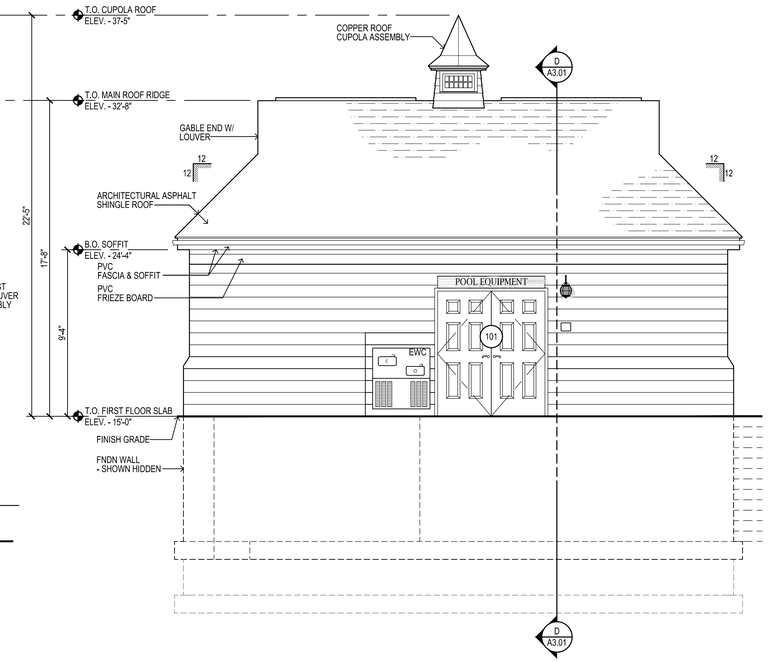

2 EXTERIOR ELEVATION
SCALE: 1/4" = 1'-0" FILTER BUILDING

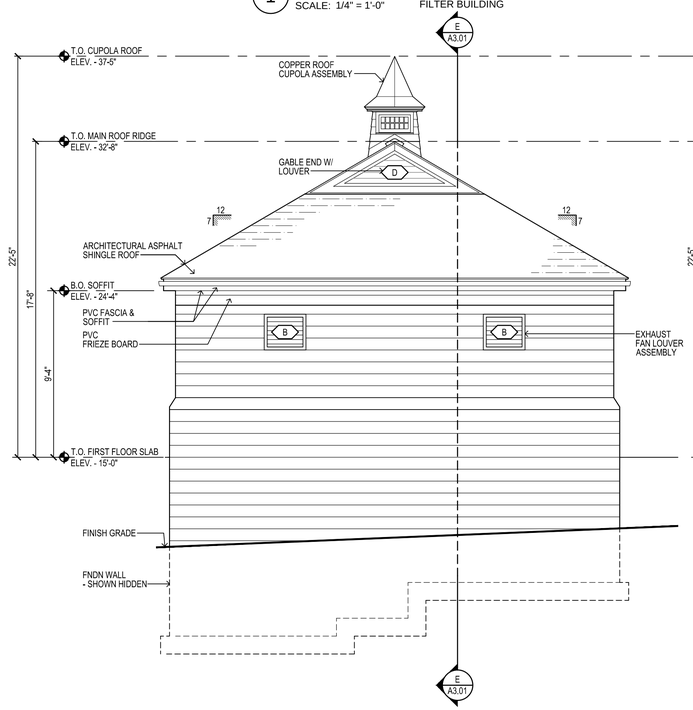

3 EXTERIOR ELEVATION
SCALE: 1/4" = 1'-0" FILTER BUILDING

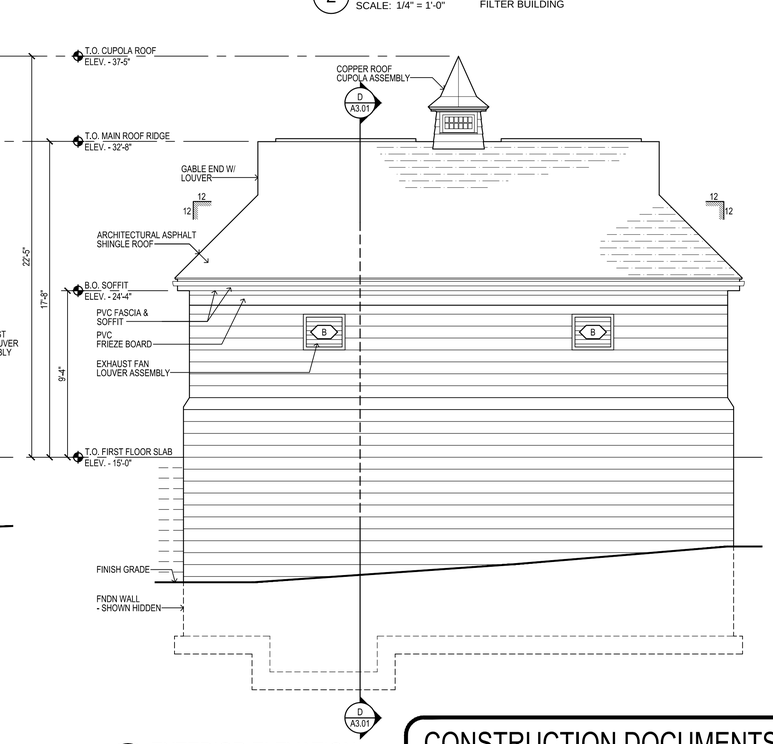

4 EXTERIOR ELEVATION
SCALE: 1/4" = 1'-0" FILTER BUILDING
0 2' 4' 8'
1/4" = 1'-0"

CONSTRUCTION DOCUMENTS
12/11/15

Weston&Sampson®
273 Dividend Road, Rocky Hill, CT 06067
(860) 513-1473 (800) SAMPSON
www.westonandsampson.com

No.	Date	Dr.By	Ck.By	App.By	Description
		A	P	P	R O V E D

DECEMBER 15, 2015
DATE

REGISTERED PROFESSIONAL ENGINEER

STATE OF CONNECTICUT ★ DANIEL J. TERNEY, III ★ LICENSED ARCHITECT No. 22364

TOWN OF GREENWICH – DEPARTMENT OF PUBLIC WORKS
RITCH AVENUE WEST, GREENWICH, CONNECTICUT
BYRAM PARK POOL REPLACEMENT

EXTERIOR ELEVATIONS – FILTER BUILDING – ALTERNATE

CADD NO.	SCALE:	CONTRACT:	JOB NO.	DR.BY	DSN.BY	CHK.BY	APP.BY
GREENWICH	VARIES	–	2130336	BPM	BPM	JRC	DGT

FILE NO. A2.03A

SHEET – OF –

CONSTRUCTION DOCUMENTS
12/11/15

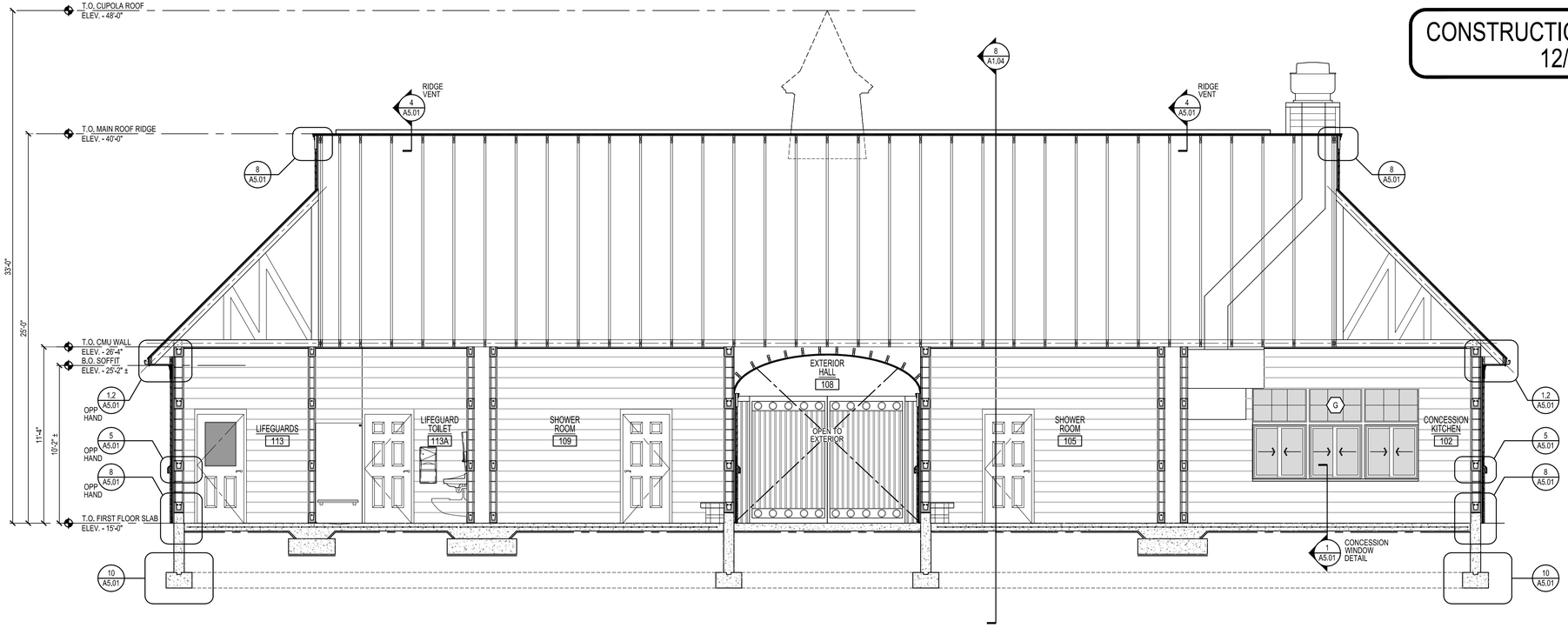

A BUILDING SECTION
SCALE: 1/4" = 1'-0" MAIN BUILDING

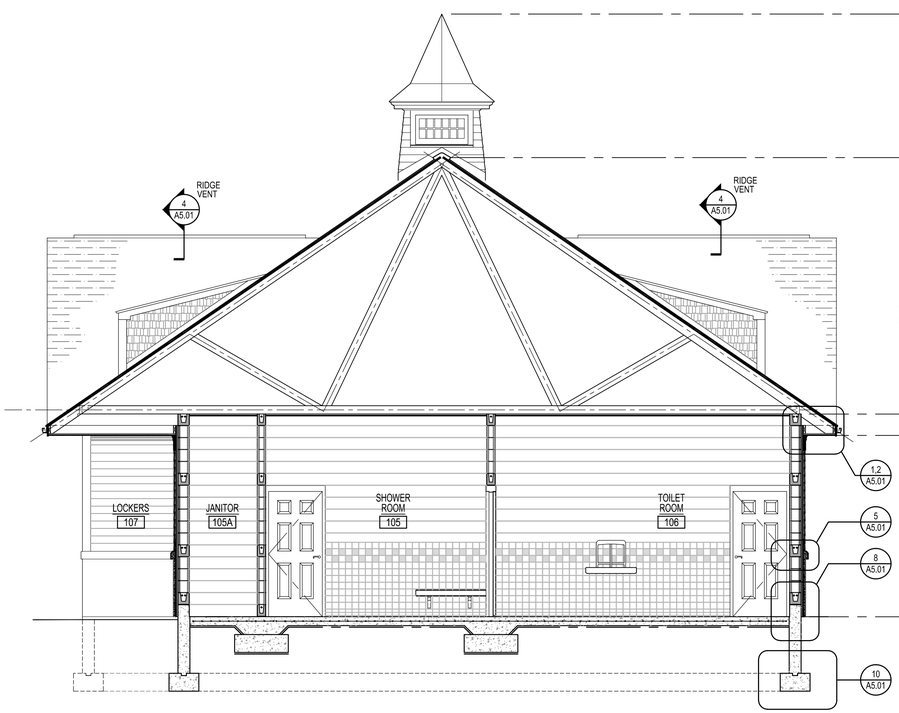

B BUILDING SECTION
SCALE: 1/4" = 1'-0" MAIN BUILDING

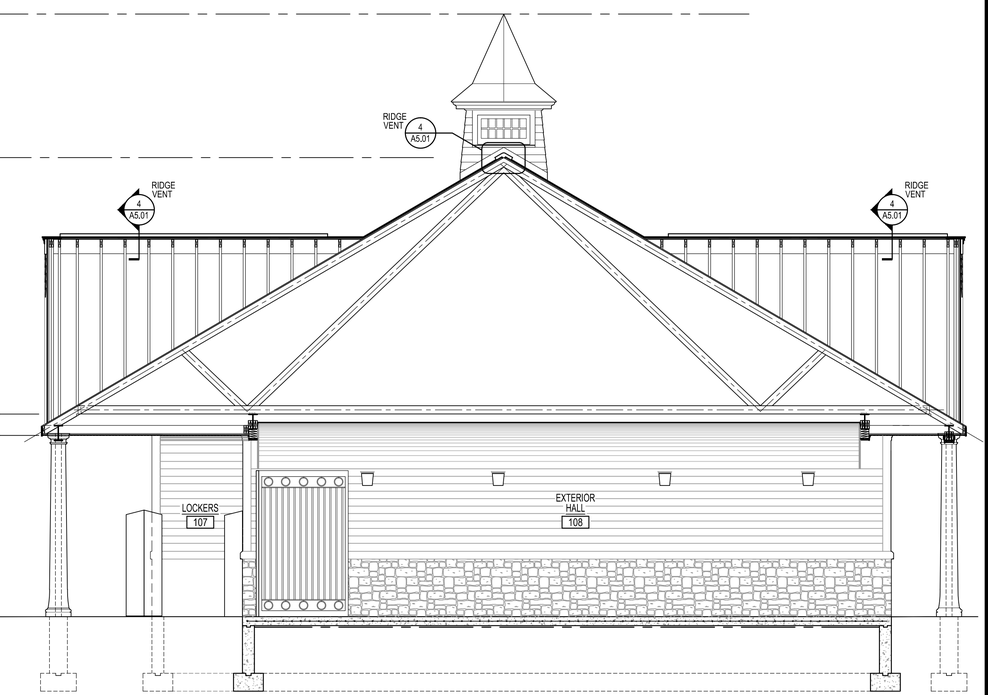

C BUILDING SECTION
SCALE: 1/4" = 1'-0" MAIN BUILDING

0 2' 4' 8'
1/4" = 1'-0"

Weston&Sampson®
273 Dividend Road, Rocky Hill, CT 06067
(860) 513-1473 (800) SAMPSON
www.westonandsampson.com

No.	Date	Dr.By	Ck.By	App.By	Description

A P P R O V E D
DATE DECEMBER 15, 2015
REGISTERED PROFESSIONAL ENGINEER

STATE OF CONNECTICUT ★ DANIEL J. TERNEY III ★ LICENSED ARCHITECT No. 22364

TOWN OF GREENWICH – DEPARTMENT OF PUBLIC WORKS
RITCH AVENUE WEST, GREENWICH, CONNECTICUT
BYRAM PARK POOL REPLACEMENT

BUILDING SECTION – MAIN BUILDING

CADD NO.	SCALE:	CONTRACT:	JOB NO.	DR.BY	DSN.BY	CHK.BY	APP.BY
GREENWICH	VARIES	–	2130336	BPM	BPM	JRC	DGT

FILE NO. A3.00

SHEET – OF –

CONSTRUCTION DOCUMENTS
12/11/15

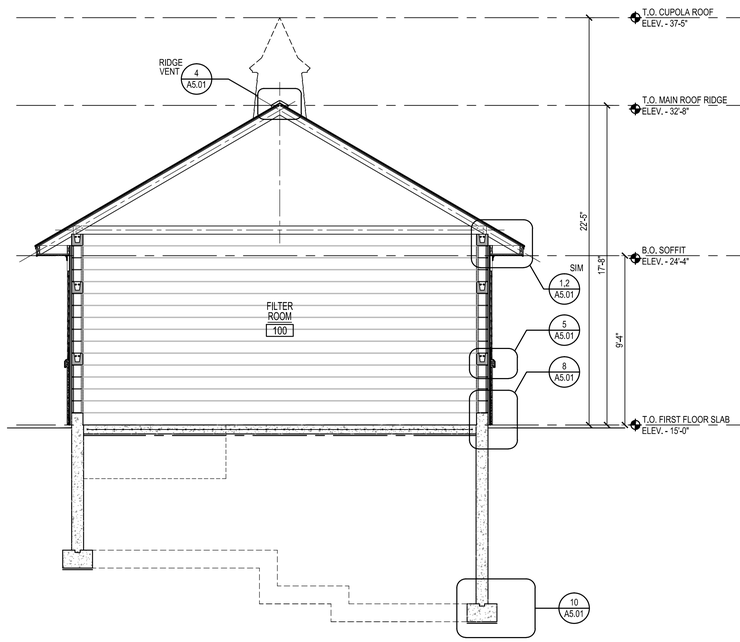

D BUILDING SECTION
SCALE: 1/4" = 1'-0" FILTER BUILDING

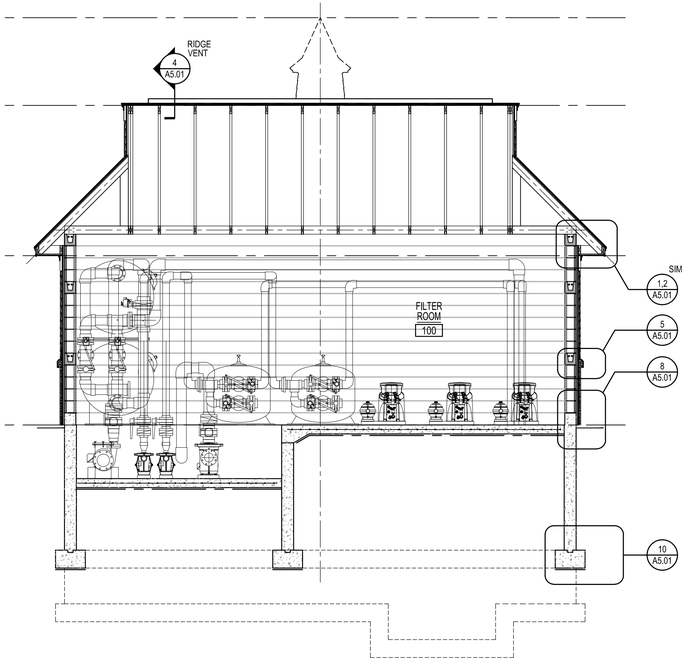

E BUILDING SECTION
SCALE: 1/4" = 1'-0" FILTER BUILDING

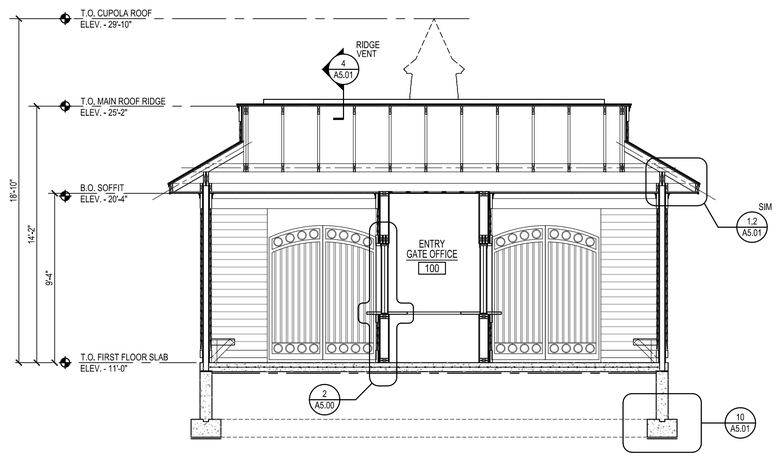

F BUILDING SECTION
SCALE: 1/4" = 1'-0" ENTRY GATE

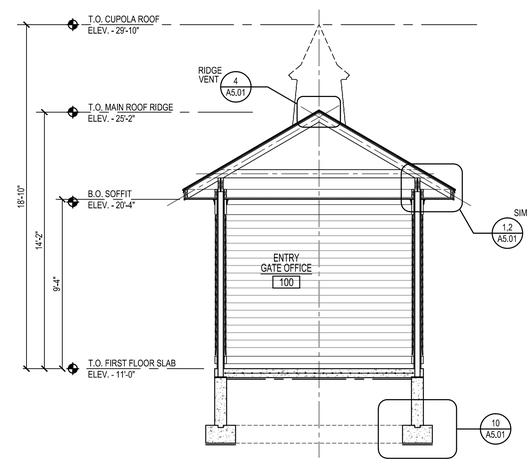

G BUILDING SECTION
SCALE: 1/4" = 1'-0" ENTRY GATE

GENERAL NOTE:
THE WALLS WILL BE CONSTRUCTED FOLLOWING FEMA TECHNICAL BULLETIN 9 FOR BREAK AWAY WALLS. ONLY AT ENTRY GATE BUILDING. STRUCTURAL STEEL FRAME WILL REMAIN IN A STORM EVENT. REFER TO STRUCT DWGS FOR STEEL FRAME CONSTRUCTION.

0 2' 4' 8'
1/4" = 1'-0"

Weston&Sampson®
273 Dividend Road, Rocky Hill, CT 06067
(860) 513-1473 (800) SAMPSON
www.westonandsampson.com

No.	Date	Dr.By	Ck.By	App.By	Description
		A	P	P	R O V E D

DECEMBER 15, 2015
DATE
REGISTERED PROFESSIONAL ENGINEER

STATE OF CONNECTICUT ★ DANIEL P. TERNEY III ★ No. 22837 ★ LICENSED PROFESSIONAL ENGINEER

TOWN OF GREENWICH – DEPARTMENT OF PUBLIC WORKS
RITCH AVENUE WEST, GREENWICH, CONNECTICUT
BYRAM PARK POOL REPLACEMENT

BUILDING SECTION – ENTRY GATE & FILTER BLDG

CADD NO.	SCALE:	CONTRACT:	JOB NO.	DR.BY	DSN.BY	CHK.BY	APP.BY
GREENWICH	VARIES	–	2130336	BPM	BPM	JRC	DGT

A3.01

FILE NO.

SHEET – OF –

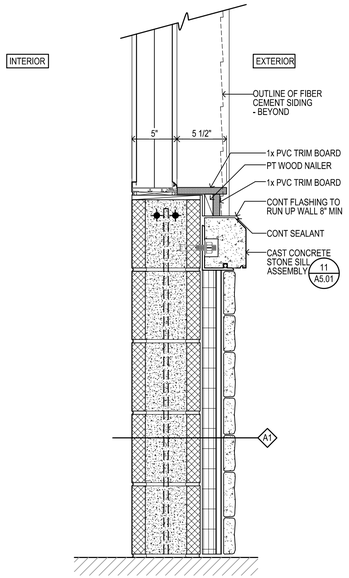

1 CONCESSION DETAIL
SCALE: 1 1/2" = 1'-0"

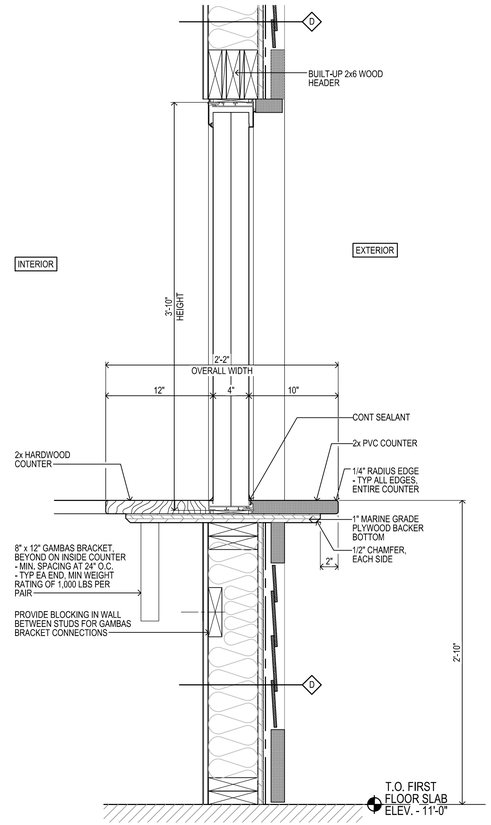

2 TRANSACTION COUNTER DETAIL
SCALE: 1 1/2" = 1'-0"

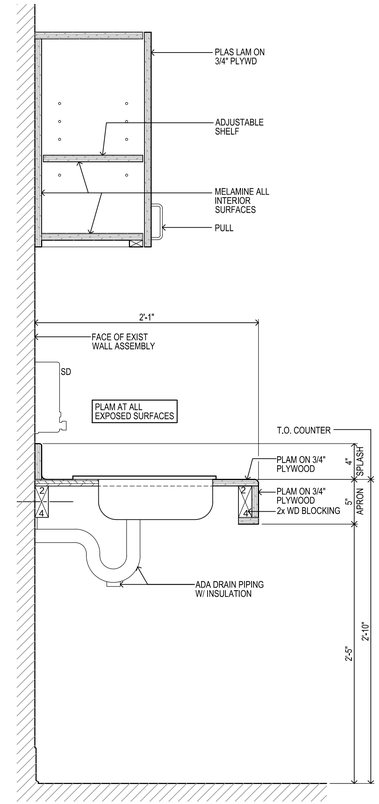

3 COUNTER DETAIL
SCALE: 1 1/2" = 1'-0"

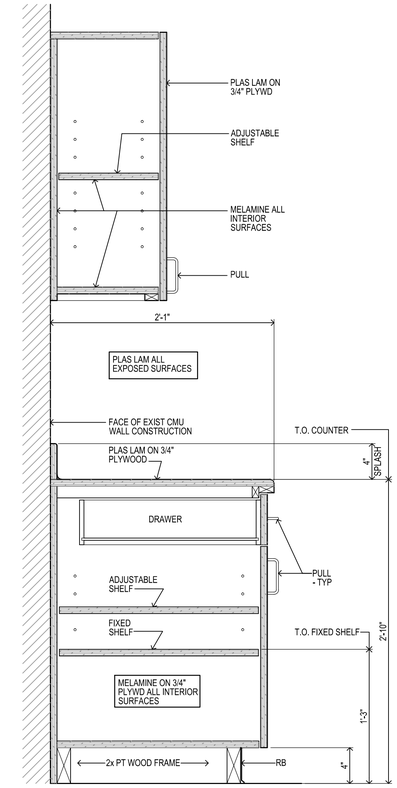

4 BASE / WALL CABINET DETAIL
SCALE: 1 1/2" = 1'-0"

5 NOT USED
SCALE: 3/4" = 1'-0"

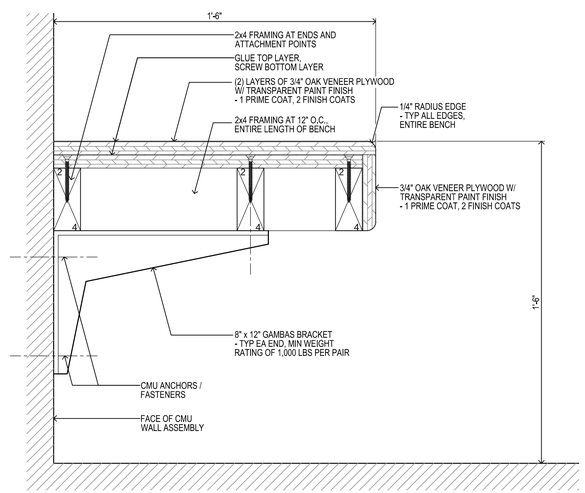

6 BENCH DETAIL
SCALE: 3" = 1'-0"

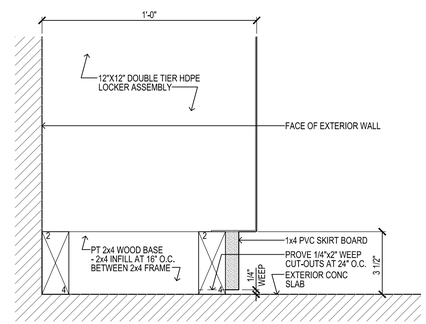

7 LOCKER BASE DETAIL
SCALE: 3" = 1'-0"

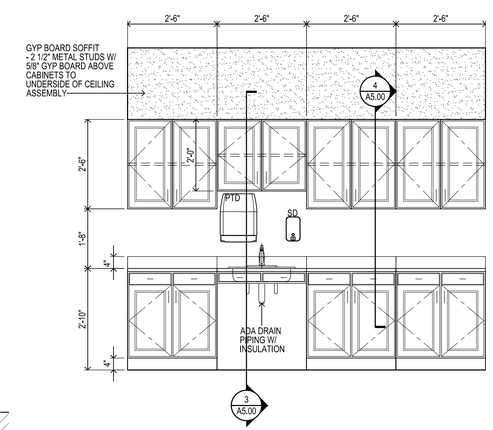

8 MILLWORK ELEVATION
SCALE: 1/2" = 1'-0"

CONSTRUCTION DOCUMENTS
12/11/15

Weston&Sampson®
273 Dividend Road, Rocky Hill, CT 06067
(860) 513-1473 (800) SAMPSON
www.westonandsampson.com

No.	Date	Dr.By	Ck.By	App.By	Description
		A	P	P	R O V E D

DECEMBER 15, 2015
DATE

REGISTERED PROFESSIONAL ENGINEER

STATE OF CONNECTICUT ★ DANIEL J. TERNEY, III ★ LICENSED ARCHITECT

TOWN OF GREENWICH – DEPARTMENT OF PUBLIC WORKS
RITCH AVENUE WEST, GREENWICH, CONNECTICUT
BYRAM PARK POOL REPLACEMENT

MILLWORK DETAILS

CADD NO.	SCALE:	CONTRACT:	JOB NO.	DR.BY	DSN.BY	CHK.BY	APP.BY
GREENWICH	VARIES	–	2130336	BPM	BPM	JRC	DGT

FILE NO. A5.00

SHEET – OF –

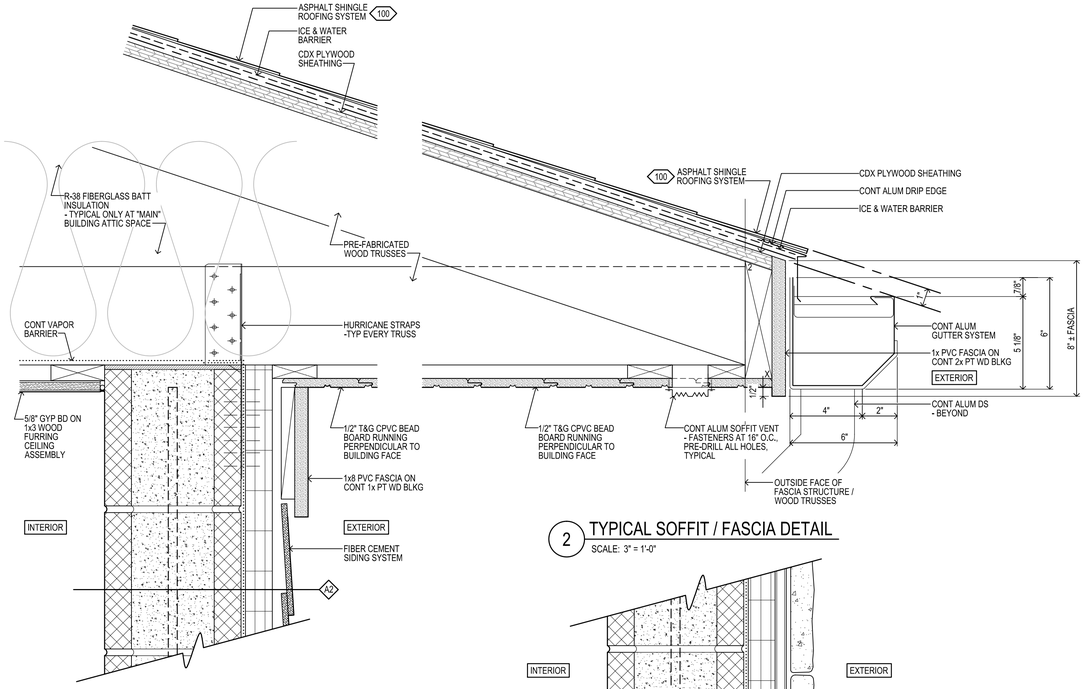

1 TYPICAL SOFFIT / FASCIA DETAIL AT WALL
SCALE: 3" = 1'-0"

2 TYPICAL SOFFIT / FASCIA DETAIL
SCALE: 3" = 1'-0"

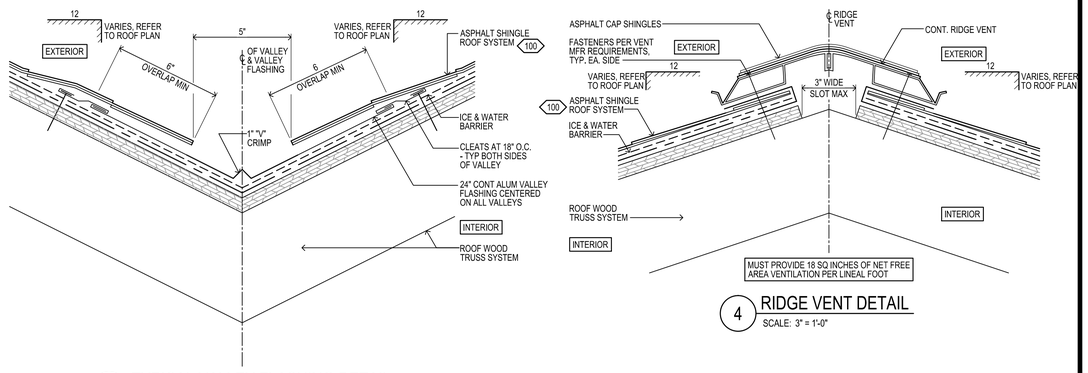

3 TYPICAL VALLEY FLASHING DETAIL
SCALE: 3" = 1'-0"

4 RIDGE VENT DETAIL
SCALE: 3" = 1'-0"

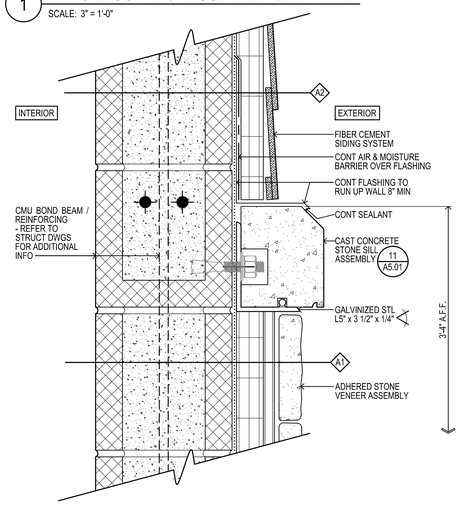

5 TYPICAL CONCRETE SILL DETAIL
SCALE: 3" = 1'-0"

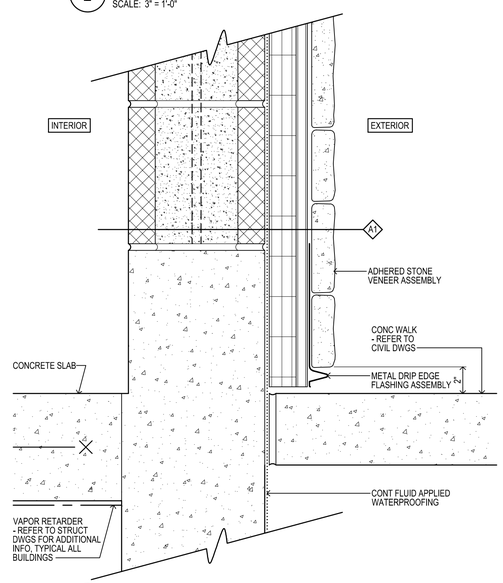

6 TYPICAL WALL BASE DETAIL
SCALE: 3" = 1'-0"

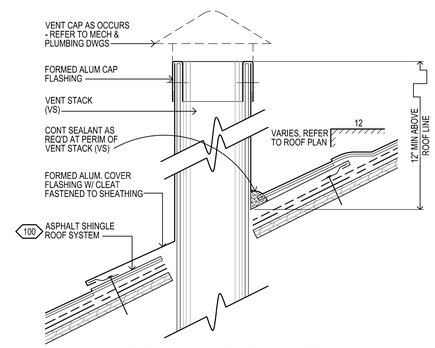

7 TYPICAL VENT STACK DETAIL
SCALE: 3" = 1'-0"

REFER TO PLUMBING DRAWINGS FOR LOCATION

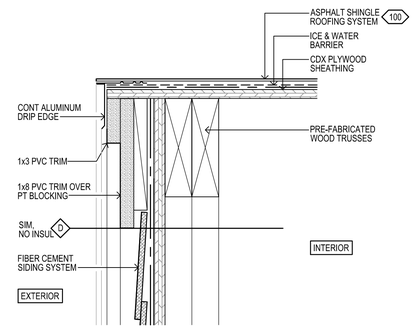

8 TYPICAL RAKE DETAIL
SCALE: 3" = 1'-0"

9 NOT USED
SCALE: 3" = 1'-0"

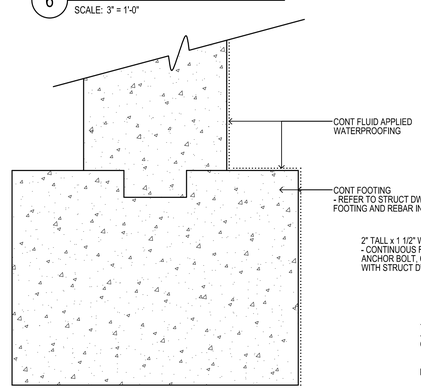

10 TYPICAL FOOTING DETAIL
SCALE: 3" = 1'-0"

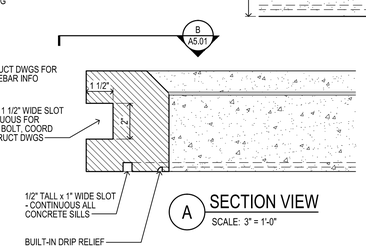

A SECTION VIEW
SCALE: 3" = 1'-0"

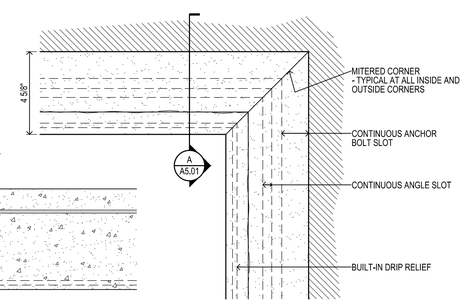

B PLAN VIEW
SCALE: 3" = 1'-0"

11 CAST CONCRETE STONE SILL ASSEMBLY DETAIL
SCALE: 3" = 1'-0"

CONSTRUCTION DOCUMENTS
12/11/15

Weston&Sampson®
273 Dividend Road, Rocky Hill, CT 06067
(860) 513-1473 (800) SAMPSON
www.westonandsampson.com

No.	Date	Dr.By	Ck.By	App.By	Description
		A	P	P	R O V E D

DECEMBER 15, 2015
DATE

REGISTERED PROFESSIONAL ENGINEER

STATE OF CONNECTICUT ★ DANIEL J. TESSIER III ★ No. 24202 ★ LICENSED PROFESSIONAL ENGINEER

TOWN OF GREENWICH – DEPARTMENT OF PUBLIC WORKS
RITCH AVENUE WEST, GREENWICH, CONNECTICUT
BYRAM PARK POOL REPLACEMENT

DETAILS

CADD NO.	SCALE:	CONTRACT:	JOB NO.	DR.BY	DSN.BY	CHK.BY	APP.BY
GREENWICH	VARIES	–	2130336	BPM	BPM	JRC	DGT

A5.01

FILE NO.

SHEET – OF –

DOOR TYPES
3/8" = 1'-0"

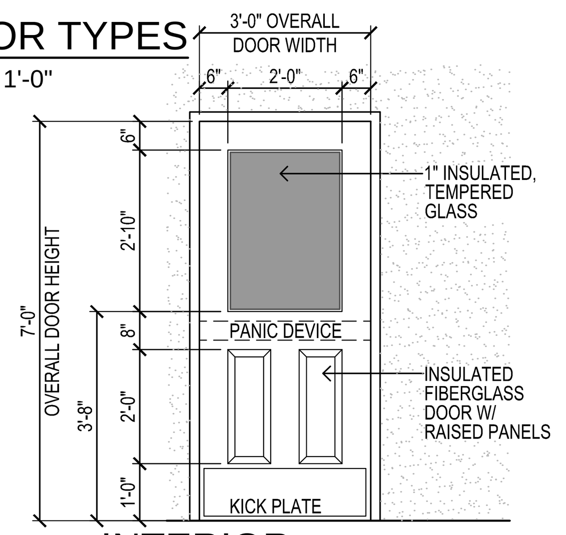

1 INTERIOR DOOR ELEVATION
SCALE: 3/8" = 1'-0" (TYPICAL PUBLIC DOOR FROM INTERIOR)

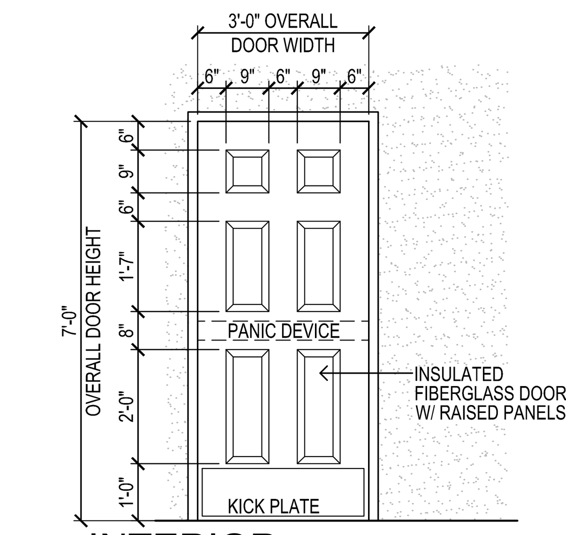

2 INTERIOR DOOR ELEVATION
SCALE: 3/8" = 1'-0" (TYPICAL PRIVATE DOOR FROM INTERIOR)

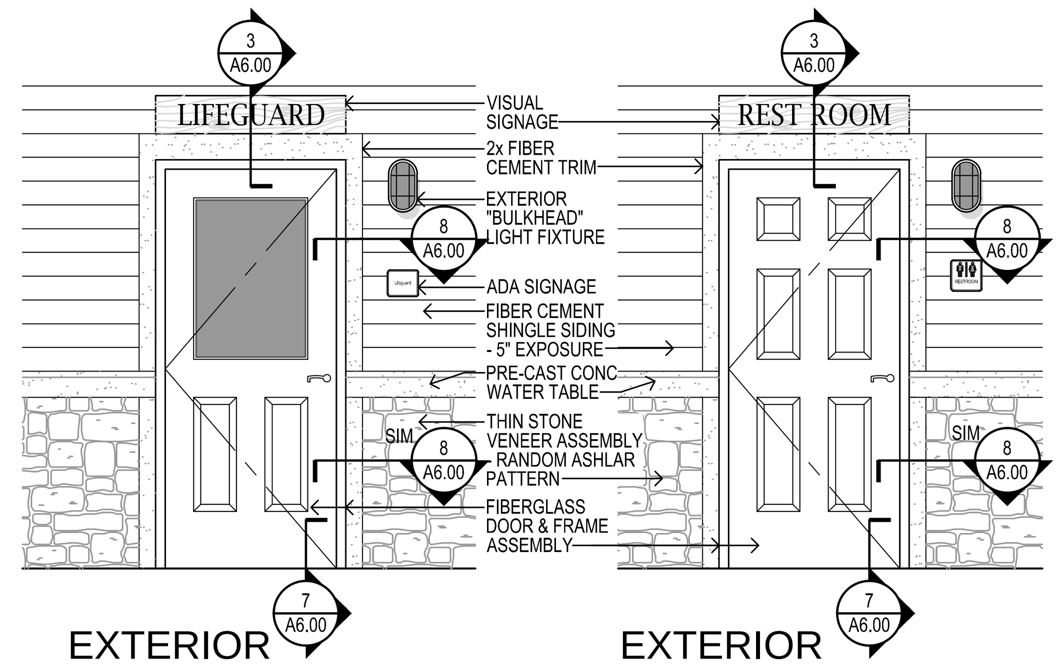

3 EXTERIOR DOOR ELEVATION
SCALE: 3/8" = 1'-0" (TYPICAL PUBLIC DOOR FROM EXTERIOR)

4 EXTERIOR DOOR ELEVATION
SCALE: 3/8" = 1'-0" (TYPICAL PRIVATE DOOR FROM EXTERIOR)

ROOM FINISH SCHEDULE

ROOM		FLOOR			WALLS								CEILING				REMARKS
#	NAME	MAT	FIN	BASE	MAT - NORTH	FIN - NORTH	MAT - SOUTH	FIN - SOUTH	MAT - EAST	FIN - EAST	MAT - WEST	FIN - WEST	MAT	FIN	HGT	TYPE	
POOL BLDG																	
100	ELEC ROOM	CONC	-	-	CMU	PNT	CMU	PNT	CMU	PNT	CMU	PNT	GYP BD	PNT	11'-2" ±	-	-
101	SINGLE TOILET	CONC	RES FLR SYSTEM	RES BASE SYSTEM	CMU	PNT / CT	CMU	PNT / CT	CMU	PNT / CT	CMU	PNT / CT	GYP BD	PNT	11'-2" ±	-	1.
102	CONCESSION KITCHEN	CONC	6x6 QUARRY TILE	6" QUARRY TILE BASE	CMU	PNT / FRP	CMU	PNT / FRP	CMU	PNT / FRP	CMU	PNT / FRP	GYP BD	PNT	11'-2" ±	-	-
103	PANTRY STORAGE	CONC	6x6 QUARRY TILE	6" QUARRY TILE BASE	CMU	PNT / FRP	CMU	PNT / FRP	CMU	PNT / FRP	CMU	PNT / FRP	GYP BD	PNT	11'-2" ±	-	-
104	CONCESSION PICK-UP	CONC	-	-	FIBER CEMENT SIDING	-	FIBER CEMENT SIDING / ALUM	- / -	FIBER CEMENT SIDING	-	FIBER CEMENT SIDING / ALUM	- / -	GYP BD	PNT	11'-2" ±	-	-
105	SHOWER ROOM	CONC	RES FLR SYSTEM	RES BASE SYSTEM	CMU	PNT / CT	CMU	PNT / CT	CMU	PNT / CT	CMU	PNT / CT	GYP BD	PNT	11'-2" ±	-	1.
105A	JANITOR	CONC	RES FLR SYSTEM	RES BASE SYSTEM	CMU	PNT / CT	CMU	PNT / CT	CMU	PNT / CT	CMU	PNT / CT	GYP BD	PNT	11'-2" ±	-	1.
106	TOILET ROOM	CONC	RES FLR SYSTEM	RES BASE SYSTEM	CMU	PNT / CT	CMU	PNT / CT	CMU	PNT / CT	CMU	PNT / CT	GYP BD	PNT	11'-2" ±	-	1.
107	LOCKERS	CONC	-	-	-	-	FIBER CEMENT SIDING	-	FIBER CEMENT SIDING	-	FIBER CEMENT SIDING	-	PVC BEAD BOARD	-	10'-2" ±	-	-
108	EXTERIOR HALL	CONC	-	-	-	-	-	-	FIBER CEMENT SIDING	-	FIBER CEMENT SIDING	-	PVC BEAD BOARD	-	VARIES 8'-4± - 10'-10"±	-	-
109	SHOWER ROOM	CONC	RES FLR SYSTEM	RES BASE SYSTEM	CMU	PNT / CT	CMU	PNT / CT	CMU	PNT / CT	CMU	PNT / CT	GYP BD	PNT	11'-2" ±	-	1.
109A	JANITOR	CONC	RES FLR SYSTEM	RES BASE SYSTEM	CMU	PNT / CT	CMU	PNT / CT	CMU	PNT / CT	CMU	PNT / CT	GYP BD	PNT	11'-2" ±	-	1.
110	TOILET ROOM	CONC	RES FLR SYSTEM	RES BASE SYSTEM	CMU	PNT / CT	CMU	PNT / CT	CMU	PNT / CT	CMU	PNT / CT	GYP BD	PNT	11'-2" ±	-	1.
111	SINGLE TOILET	CONC	RES FLR SYSTEM	RES BASE SYSTEM	CMU	PNT / CT	CMU	PNT / CT	CMU	PNT / CT	CMU	PNT / CT	GYP BD	PNT	11'-2" ±	-	1.
112	NURSE	CONC	CARPET TILE	RUBBER BASE	CMU	PNT	CMU	PNT	CMU	PNT	CMU	PNT	GYP BD	PNT	11'-2" ±	-	-
112A	NURSE'S TOILET	CONC	RES FLR SYSTEM	RES BASE SYSTEM	CMU	PNT / CT	CMU	PNT / CT	CMU	PNT / CT	CMU	PNT / CT	GYP BD	PNT	11'-2" ±	-	1.
113	LIFEGUARDS	CONC	CARPET TILE	RUBBER BASE	CMU	PNT	CMU	PNT	CMU	PNT	CMU	PNT	GYP BD	PNT	11'-2" ±	-	-
114	LIFEGUARD'S TOILET	CONC	RES FLR SYSTEM	RES BASE SYSTEM	CMU	PNT / CT	CMU	PNT / CT	CMU	PNT / CT	CMU	PNT / CT	GYP BD	PNT	11'-2" ±	-	1.
FILTER BLDG																	
100	FILTER ROOM	CONC	-	-	CMU	PNT	CMU	PNT	CMU	PNT	CMU	PNT	OTS	-	11'-4"	-	-
101	ELEC ROOM	CONC	-	-	CMU	PNT	CMU	PNT	CMU	PNT	CMU	PNT	OTS	-	11'-4"	-	-
ENTRY GATE																	
100	ENTRY GATE OFFICE	CONC	-	-	GYP	PNT	GYP	PNT	GYP	PNT	GYP	PNT	GYP BD	PNT	9'-6" ±	-	-

REMARKS:

1. PROVIDE EPOXY FLOOR SYSTEM WITH HIGH ADHESION EQUAL TO "SIKAFLOOR-156/-161 PRIMER BROADCAST WITH QUARTZ SAND AND SIKAFLOOR-20 PURCEM SCREED" AS MANUF. BY SIKA CORP OR APPROVED EQUAL.

DOOR SCHEDULE

NO.	DOOR				FRAME										HW SET	LBL	REMARKS
	SIZE	TYPE	MAT	FIN	TYPE	MAT	FIN	HEAD BASE BID	JAMB BASE BID	SILL BASE BID	HEAD ALTERNATE	JAMB ALTERNATE	SILL ALTERNATE	WIDTH			
POOL BLDG																	
100	3'-0" x 7'-0" x 1 3/4"	D1	FIBER-GLASS	PRE-FINISHED	F1	FIBER-GLASS	PRE-FINISHED	3 / A6.00	8 / A6.00	7 / A6.00	9 / A6.02A	10 / A6.02A	9 / A6.02A	8-5/8	1	-	2
101	3'-0" x 7'-0" x 1 3/4"	D1	FIBER-GLASS	PRE-FINISHED	F1	FIBER-GLASS	PRE-FINISHED	3 / A6.00	8 / A6.00	7 / A6.00	9 / A6.02A	10 / A6.02A	9 / A6.02A	8-5/8	3	-	2
102	3'-0" x 7'-0" x 1 3/4"	D1	FIBER-GLASS	PRE-FINISHED	F1	FIBER-GLASS	PRE-FINISHED	3 / A6.00	8 / A6.00	7 / A6.00	9 / A6.02A	10 / A6.02A	9 / A6.02A	8-5/8	1	-	2
103	3'-0" x 7'-0" x 1 3/4"	D3	HM	PNT	F1	HM	PNT	1 / A6.00	2 / A6.00	-	-	-	-	6-5/8	2	-	
104	NOT USED																
105	3'-0" x 7'-0" x 1 3/4"	D1	FIBER-GLASS	PRE-FINISHED	F1	FIBER-GLASS	PRE-FINISHED	3 / A6.00	8 / A6.00	7 / A6.00	9 / A6.02A	10 / A6.02A	9 / A6.02A	8-5/8	1	-	2
105A	3'-0" x 7'-0" x 1 3/4"	D3	HM	PNT	F1	HM	PNT	1 / A6.00	2 / A6.00	-	-	-	-	6-5/8	2	-	
106A	3'-0" x 7'-0" x 1 3/4"	D1	FIBER-GLASS	PRE-FINISHED	F1	FIBER-GLASS	PRE-FINISHED	3 / A6.00	8 / A6.00	7 / A6.00	9 / A6.02A	10 / A6.02A	9 / A6.02A	8-5/8	1	-	2
106B	3'-0" x 7'-0" x 1 3/4"	D3	HM	PNT	F1	HM	PNT	1 / A6.00	2 / A6.00	-	-	-	-	6-5/8	2	-	
108	PAIR OF 5'-0" x 8'-0"	D4	MTL	PNT	F3	MTL	PNT	-	-	-	-	-	-	-	-	-	1
109	3'-0" x 7'-0" x 1 3/4"	D1	FIBER-GLASS	PRE-FINISHED	F1	FIBER-GLASS	PRE-FINISHED	3 / A6.00	8 / A6.00	7 / A6.00	9 / A6.02A	10 / A6.02A	9 / A6.02A	8-5/8	1	-	2
109A	3'-0" x 7'-0" x 1 3/4"	D3	HM	PNT	F1	HM	PNT	1 / A6.00	2 / A6.00	-	-	-	-	6-5/8	2	-	
110A	3'-0" x 7'-0" x 1 3/4"	D1	FIBER-GLASS	PRE-FINISHED	F1	FIBER-GLASS	PRE-FINISHED	3 / A6.00	8 / A6.00	7 / A6.00	9 / A6.02A	10 / A6.02A	9 / A6.02A	8-5/8	1	-	2
110B	3'-0" x 7'-0" x 1 3/4"	D3	HM	PNT	F1	HM	PNT	1 / A6.00	2 / A6.00	-	-	-	-	6-5/8	2	-	
111	3'-0" x 7'-0" x 1 3/4"	D1	FIBER-GLASS	PRE-FINISHED	F1	FIBER-GLASS	PRE-FINISHED	3 / A6.00	8 / A6.00	7 / A6.00	9 / A6.02A	10 / A6.02A	9 / A6.02A	8-5/8	3	-	2
112	3'-0" x 7'-0" x 1 3/4"	D1	FIBER-GLASS	PRE-FINISHED	F1	FIBER-GLASS	PRE-FINISHED	3 / A6.00	8 / A6.00	7 / A6.00	9 / A6.02A	10 / A6.02A	9 / A6.02A	8-5/8	1	-	2
112A	3'-0" x 7'-0" x 1 3/4"	D3	HM	PNT	F1	HM	PNT	1 / A6.00	2 / A6.00	-	-	-	-	6-5/8	4	-	
113	3'-0" x 7'-0" x 1 3/4"	D1	HM	PNT	F1	HM	PNT	1 / A6.00	2 / A6.00	-	-	-	-	6-5/8	4	-	
113A	3'-0" x 7'-0" x 1 3/4"	D3	HM	PNT	F1	HM	PNT	1 / A6.00	2 / A6.00	-	-	-	-	6-5/8	4	-	
113B	3'-0" x 7'-0" x 1 3/4"	D3	FIBER-GLASS	PRE-FINISHED	F1	FIBER-GLASS	PRE-FINISHED	3 / A6.00	8 / A6.00	7 / A6.00	9 / A6.02A	10 / A6.02A	9 / A6.02A	8-5/8	1	-	2, 3
PUMP BLDG																	
100	PAIR OF 3'-0" x 7'-0" x 1 3/4"	D1	FIBER-GLASS	PRE-FINISHED	F1	FIBER-GLASS	PRE-FINISHED	3 / A6.00	8 / A6.00	7 / A6.00	9 / A6.02A	10 / A6.02A	9 / A6.02A	8-5/8	1	-	2
101	3'-0" x 7'-0" x 1 3/4"	D3	HM	PNT	F1	HM	PNT	1 / A6.00	2 / A6.00	-	-	-	-	8-5/8	2	-	
ENTRY GATE																	
100	3'-0" x 7'-0" x 1 3/4"	D1	FIBER-GLASS	PRE-FINISHED	F1	FIBER-GLASS	PRE-FINISHED	4 / A6.00	5 / A6.00	9 / A6.00	-	-	-	8-1/4"	1	-	2
101A	PAIR OF 3'-0" x 7'-6"	D4	MTL	PNT	F3	MTL	PNT	-	-	-	-	-	-	-	-	-	1
101B	PAIR OF 3'-0" x 7'-6"	D4	MTL	PNT	F3	MTL	PNT	-	-	-	-	-	-	-	-	-	1

REMARKS:

1. ENTRY GATE, REFER TO DETAIL 3/A6.03 FOR DESIGN INTENT.
2. PROVIDE THERMALLY BROKEN GALV HM EXTERIOR DOOR FRAME AND INSULATED GALV HM DOOR.
3. PROVIDE RAIN CAP / DRIP EDGE ON OUT-SWINGING DOOR.

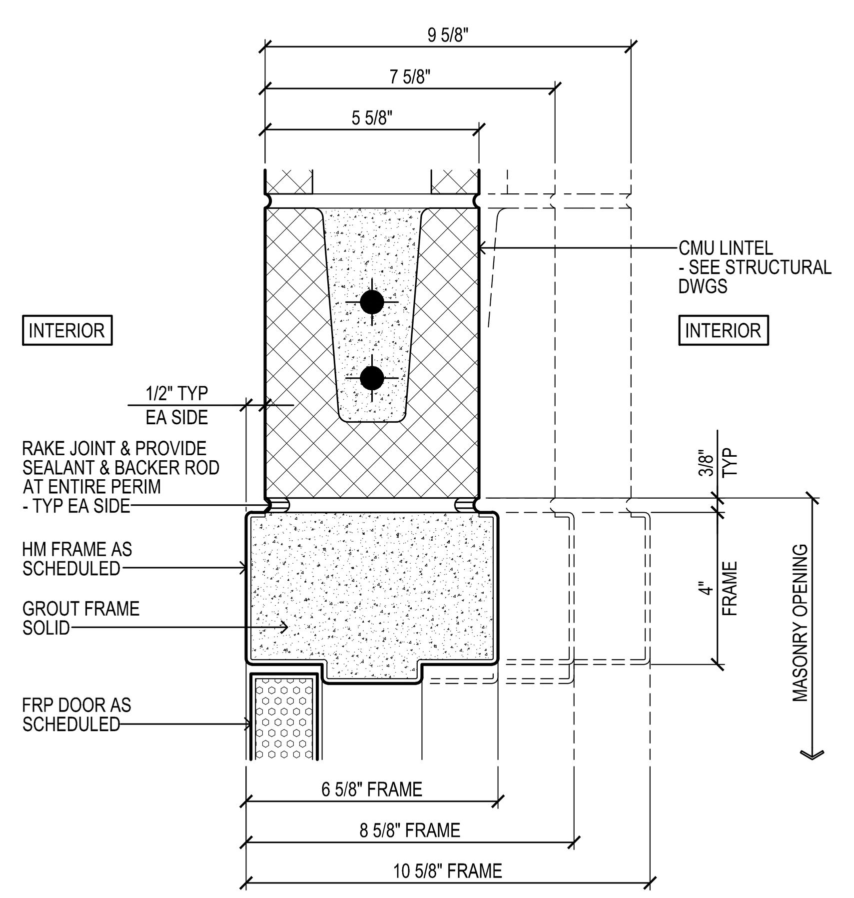

1 DOOR HEAD DETAIL
SCALE: 3" = 1'-0"

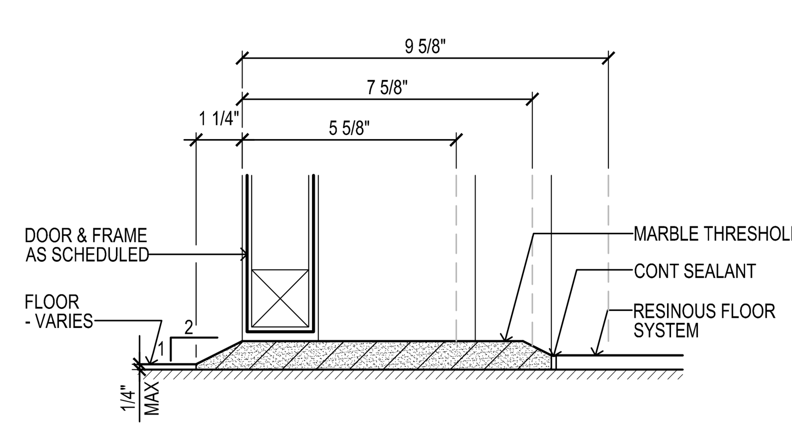

6 MARBLE THRESHOLD
SCALE: 3" = 1'-0"
8" CMU WALL SHOWN - 6" & 10" CMU WALL THRESHOLD, SIMILAR
S2

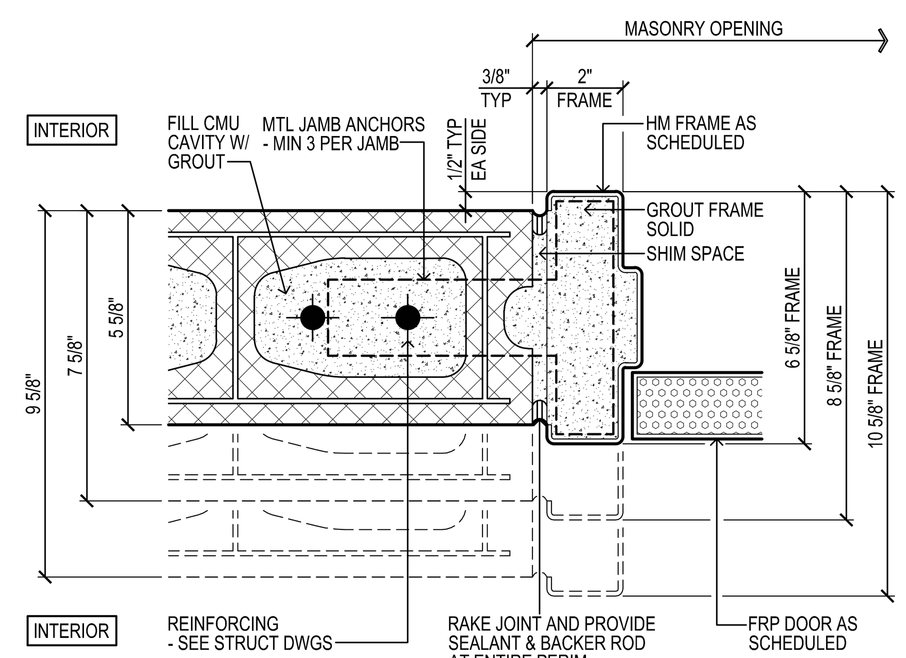

2 DOOR JAMB DETAIL
SCALE: 3" = 1'-0"

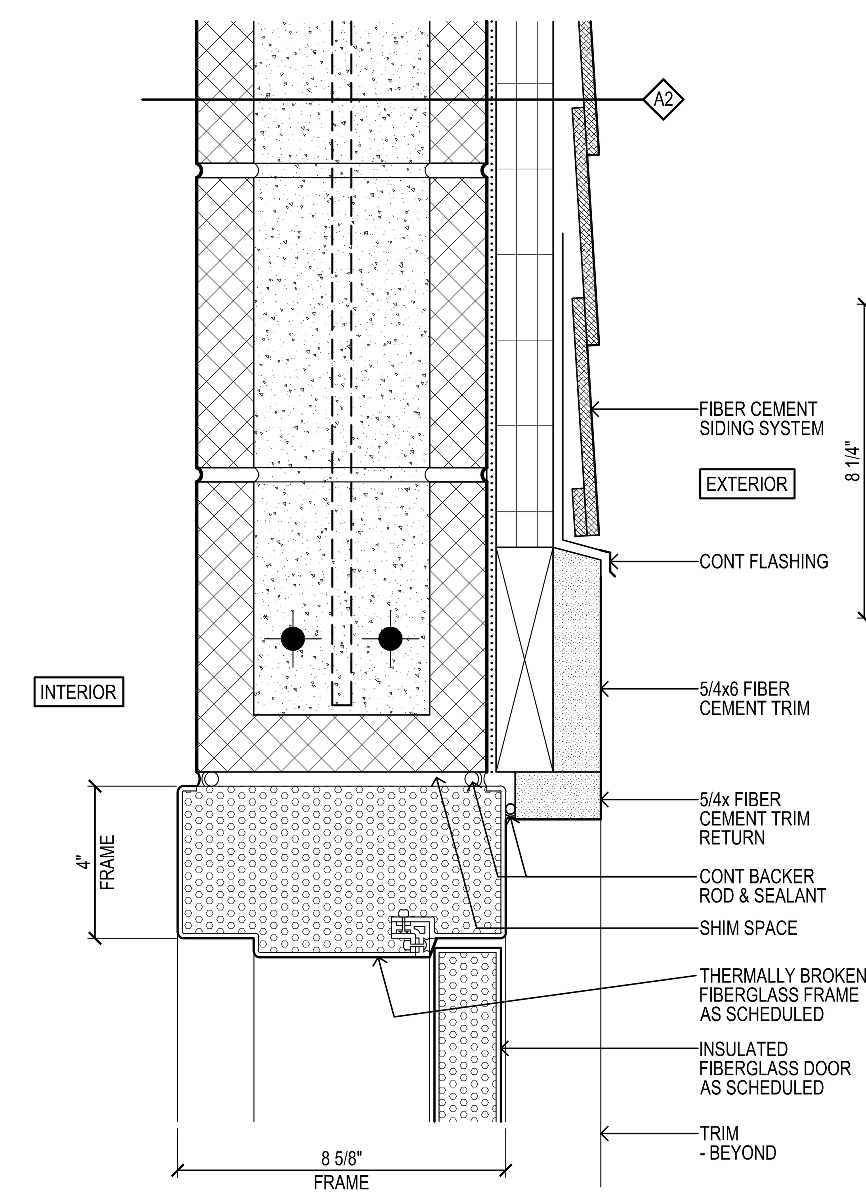

3 DOOR HEAD
SCALE: 3" = 1'-0"

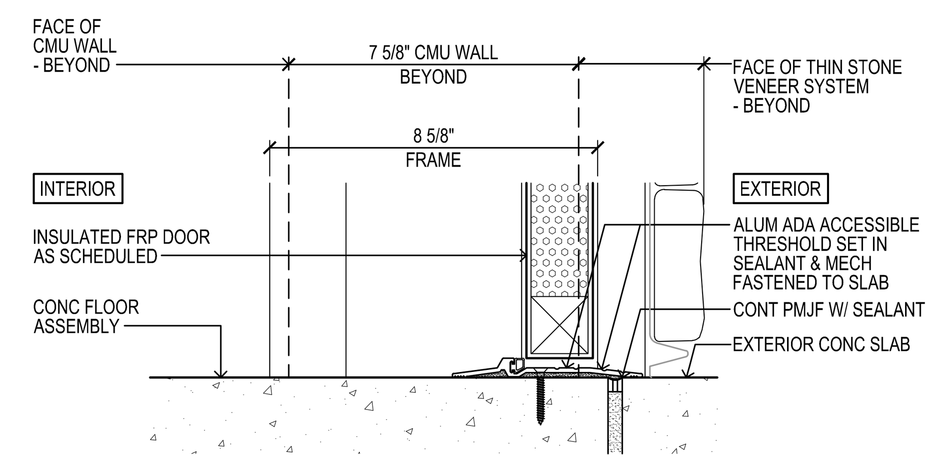

7 EXTERIOR DOOR SILL DETAIL
SCALE: 3" = 1'-0"
S1

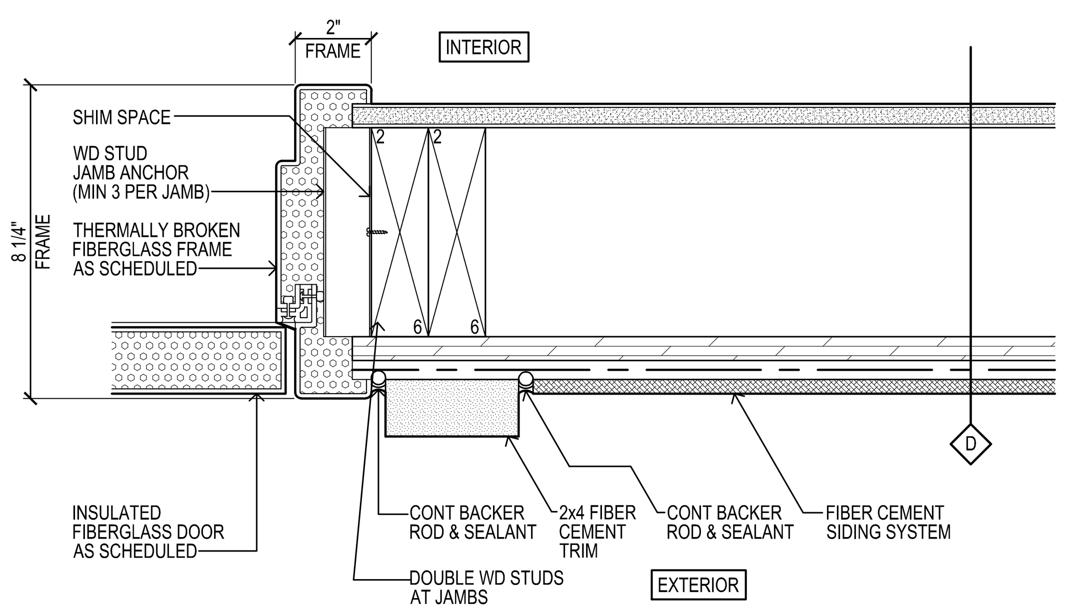

4 DOOR JAMB DETAIL
SCALE: 3" = 1'-0"

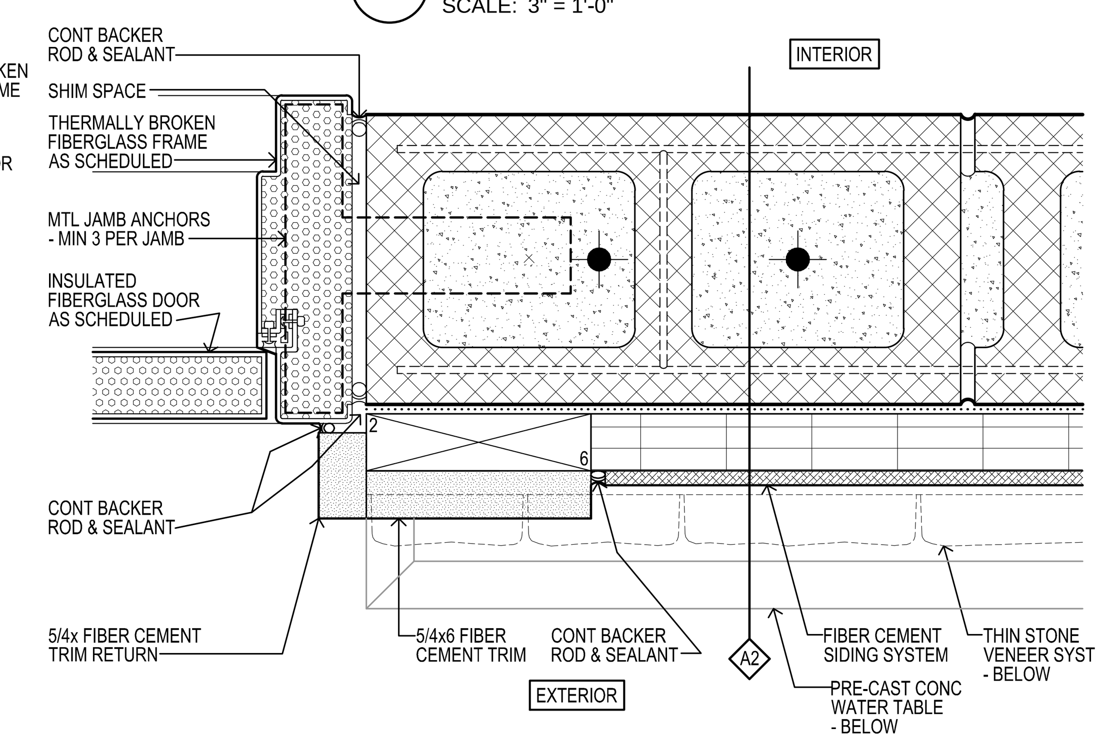

8 DOOR JAMB
SCALE: 3" = 1'-0"

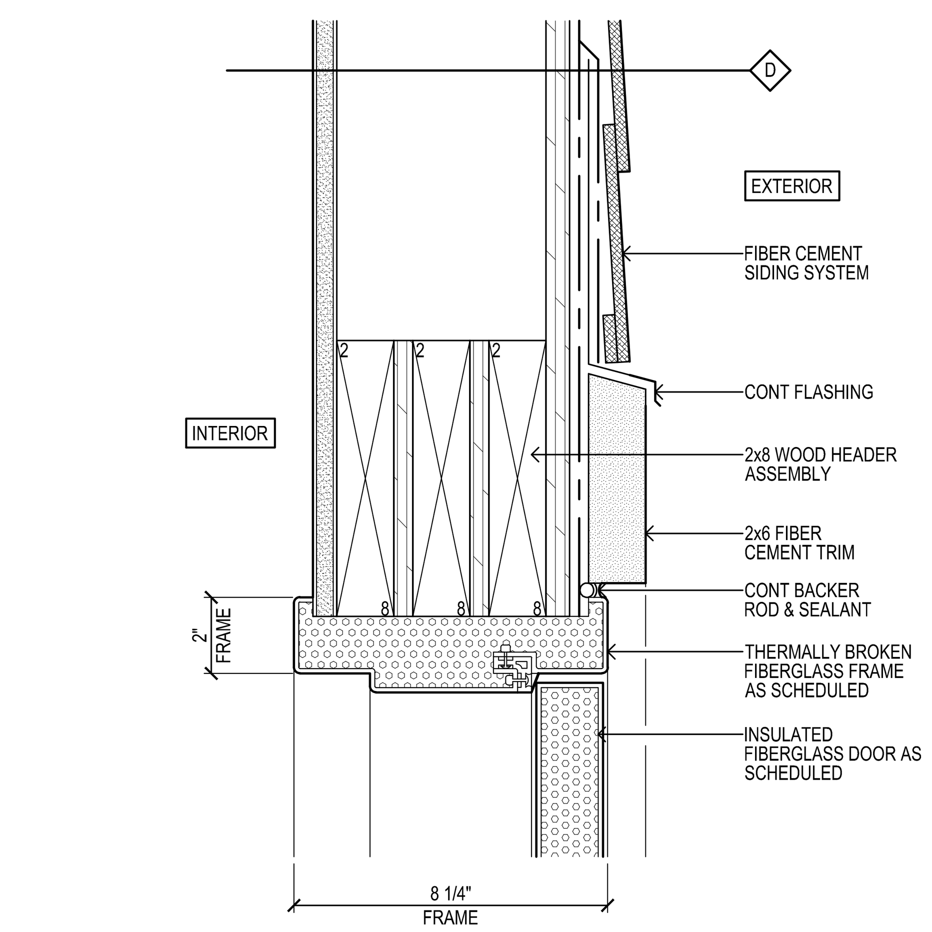

5 DOOR HEAD DETAIL
SCALE: 3" = 1'-0"

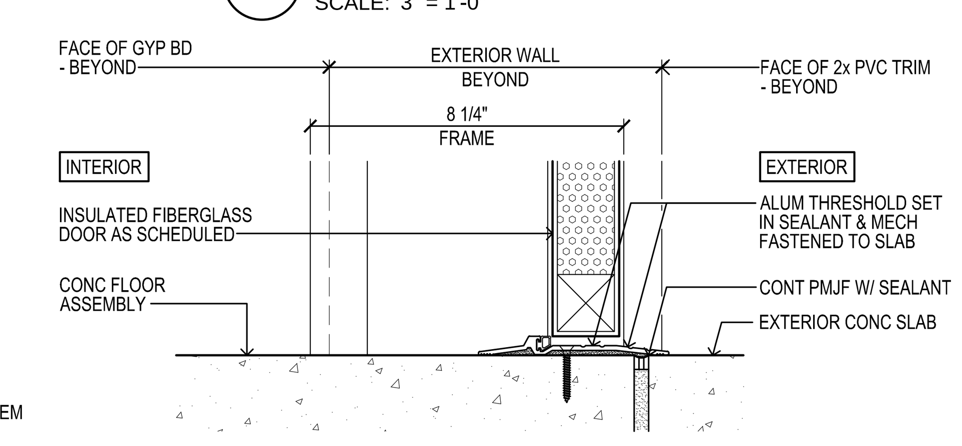

9 EXTERIOR DOOR SILL DETAIL
SCALE: 3" = 1'-0"
S1

CONSTRUCTION DOCUMENTS
12/11/15

Weston&Sampson®
273 Dividend Road, Rocky Hill, CT 06067
(860) 513-1473 (800) SAMPSON
www.westonandsampson.com

No.	Date	Dr.By	Ck.By	App.By	Description

A P P R O V E D
DECEMBER 15, 2015
DATE
REGISTERED PROFESSIONAL ENGINEER

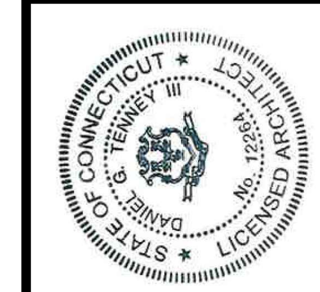

TOWN OF GREENWICH – DEPARTMENT OF PUBLIC WORKS
RITCH AVENUE WEST, GREENWICH, CONNECTICUT
BYRAM PARK POOL REPLACEMENT

ROOM FINISH & DOOR SCHEDULE AND DOOR DETAILS

CADD NO.	SCALE:	CONTRACT:	JOB NO.	DR.BY	DSN.BY	CHK.BY	APP.BY
GREENWICH	VARIES	–	2130336	BPM	BPM	JRC	DGT

FILE NO.
A6.00
SHEET – OF –

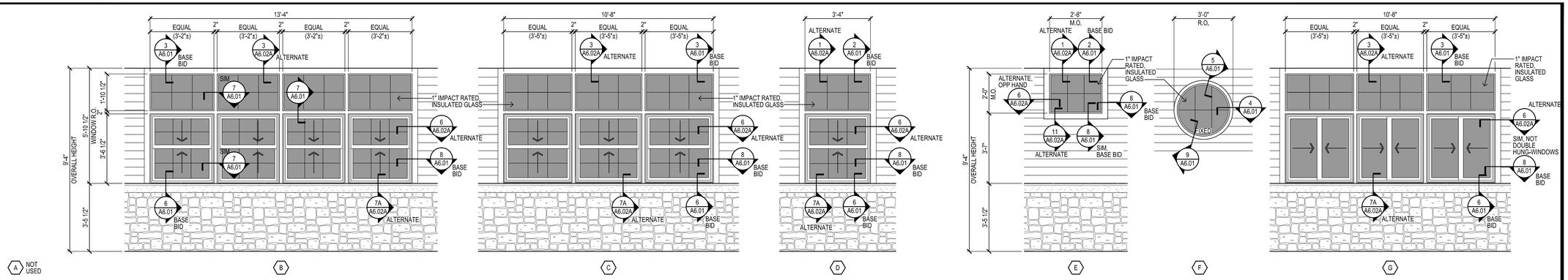

1 WINDOW SCHEDULE

SCALE: 3/8" = 1'-0"

(TYPICAL WINDOW FROM INTERIOR, PICTURE FRAMED)

GENERAL WINDOW NOTE:

CONNECT CMU FLUID APPLIED VAPOR RETARDER W/ TRANSITION STRIP TO THE WARM SIDE OF THE WINDOW ASSEMBLY

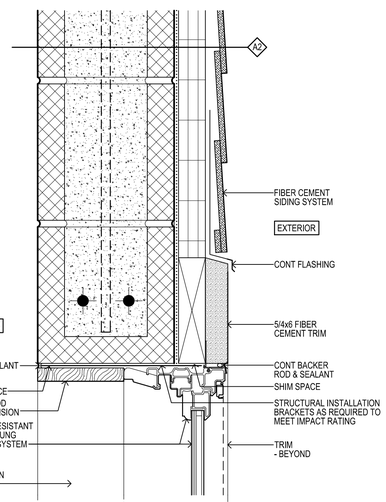

2 WINDOW HEAD

SCALE: 3" = 1'-0"

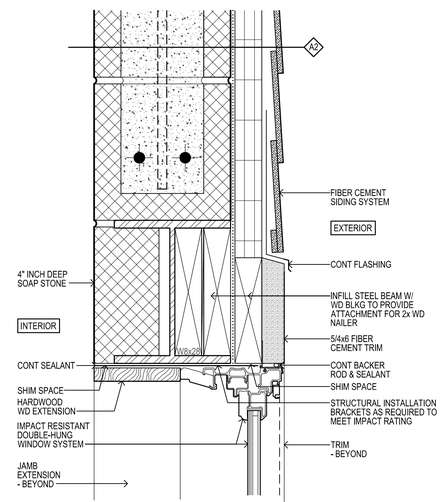

3 WINDOW HEAD

SCALE: 3" = 1'-0"

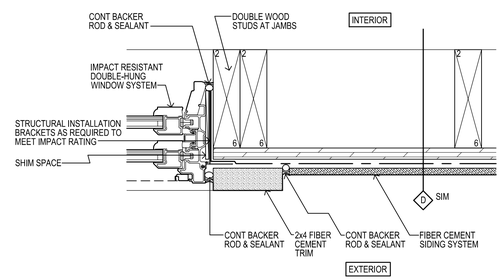

4 WINDOW JAMB

SCALE: 3" = 1'-0"

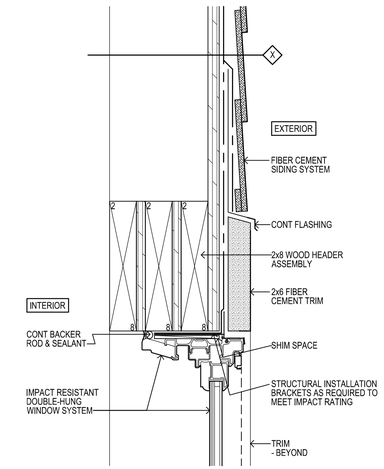

5 WINDOW HEAD

SCALE: 3" = 1'-0"

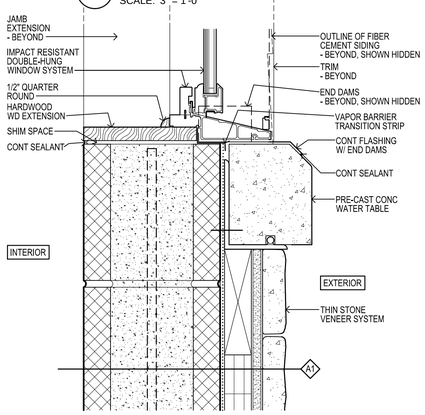

6 WINDOW SILL

SCALE: 3" = 1'-0"

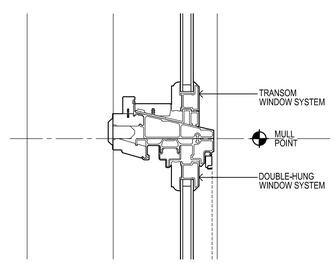

7 MULL DETAIL

SCALE: 3" = 1'-0"

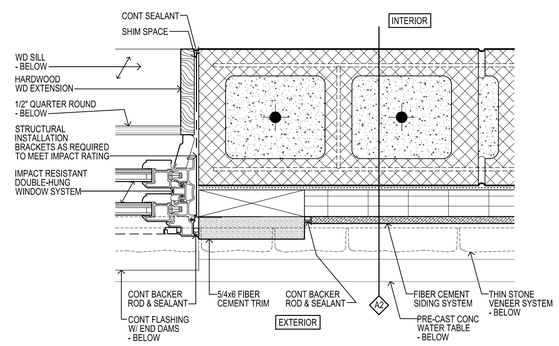

8 WINDOW JAMB

SCALE: 3" = 1'-0"

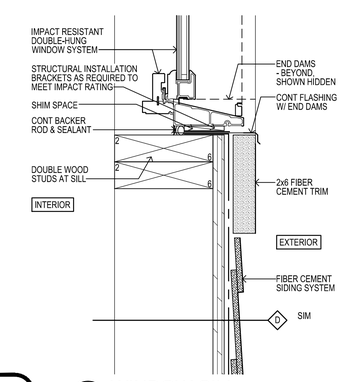

9 WINDOW SILL

SCALE: 3" = 1'-0"

CONSTRUCTION DOCUMENTS
12/11/15

Weston&Sampson®
273 Dividend Road, Rocky Hill, CT 06067
(860) 513-1473 (800) SAMPSON
www.westonandsampson.com

No.	Date	Dr.By	Ck.By	App.By	Description	DATE
		A	P	P	R O V E D	DECEMBER 15, 2015

REGISTERED PROFESSIONAL ENGINEER

STATE OF CONNECTICUT ★ DANIEL J. TERNEY III ★ No. 22000 ★ LICENSED PROFESSIONAL ENGINEER

TOWN OF GREENWICH – DEPARTMENT OF PUBLIC WORKS
RITCH AVENUE WEST, GREENWICH, CONNECTICUT
BYRAM PARK POOL REPLACEMENT

WINDOW SCHEDULE & DETAILS

CADD NO.	SCALE:	CONTRACT:	JOB NO.	DR.BY	DSN.BY	CHK.BY	APP.BY
GREENWICH	VARIES	–	2130336	BPM	BPM	JRC	DGT

FILE NO. A6.01

SHEET – OF –

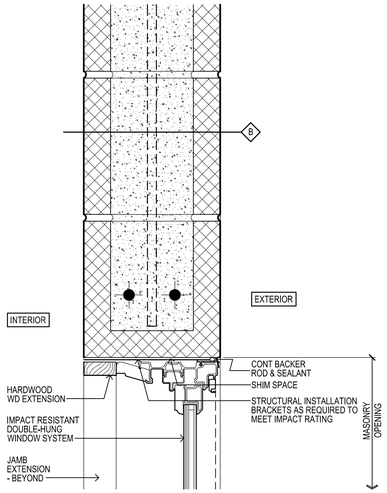

1 WINDOW HEAD
SCALE: 3" = 1'-0"

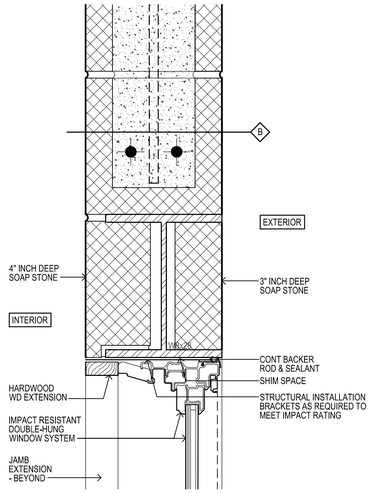

3 WINDOW HEAD
SCALE: 3" = 1'-0"

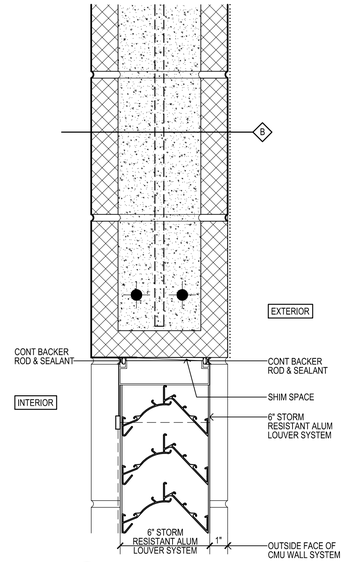

3 LOUVER HEAD
SCALE: 3" = 1'-0"

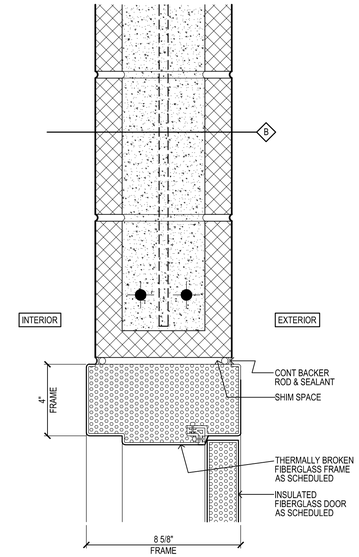

4 DOOR HEAD
SCALE: 3" = 1'-0"

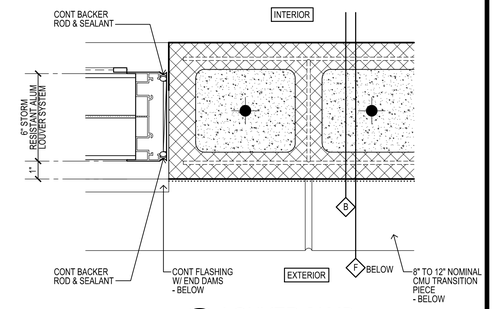

5 LOUVER JAMB
SCALE: 3" = 1'-0"

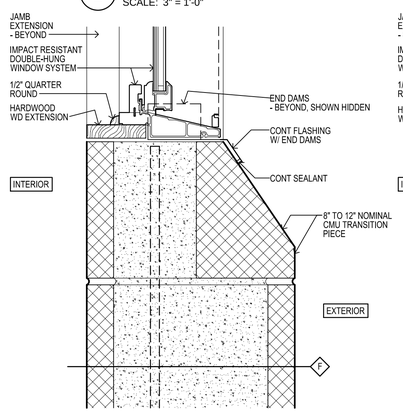

7A WINDOW SILL
SCALE: 3" = 1'-0"

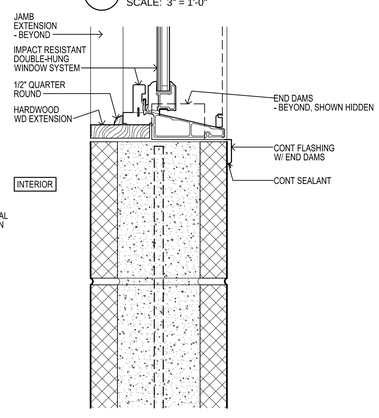

7B WINDOW SILL
SCALE: 3" = 1'-0"

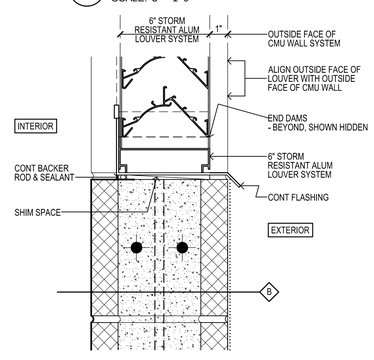

8 LOUVER SILL
SCALE: 3" = 1'-0"

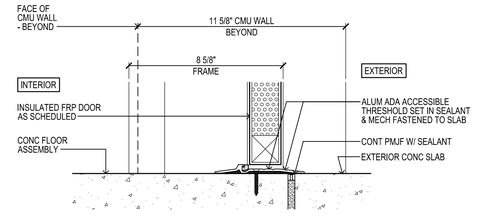

9 EXTERIOR DOOR SILL DETAIL
SCALE: 3" = 1'-0"
S1

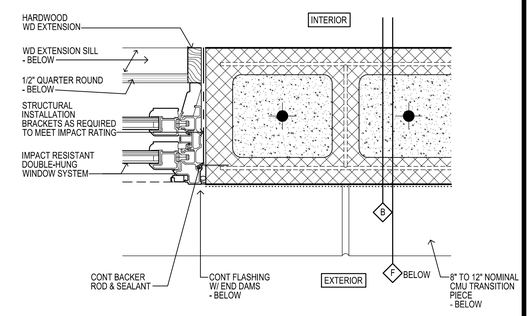

6 WINDOW JAMB
SCALE: 3" = 1'-0"

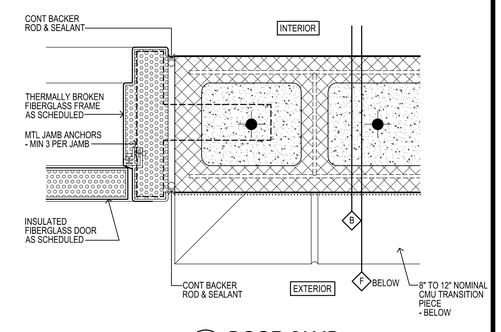

10 DOOR JAMB
SCALE: 3" = 1'-0"

CONSTRUCTION DOCUMENTS
12/11/2015

Weston&Sampson®
273 Dividend Road, Rocky Hill, CT 06067
(860) 513-1473 (800) SAMPSON
www.westonandsampson.com

No.	Date	Dr.By	Ck.By	App.By	Description
		A	P	P	R O V E D

DECEMBER 15, 2015
DATE

REGISTERED PROFESSIONAL ENGINEER

STATE OF CONNECTICUT ★ TIMOTHY J. TURNEY III ★ LICENSED ARCHITECT

TOWN OF GREENWICH – DEPARTMENT OF PUBLIC WORKS
RITCH AVENUE WEST, GREENWICH, CONNECTICUT

BYRAM PARK POOL REPLACEMENT

MISCELLANEOUS DETAILS
– ALTERNATE

CADD NO.	SCALE:	CONTRACT:	JOB NO.	DR.BY	DSN.BY	CHK.BY	APP.BY
GREENWICH	VARIES	–	2130336	BPM	BPM	JRC	DGT

A6.02A
FILE NO.

SHEET – OF –

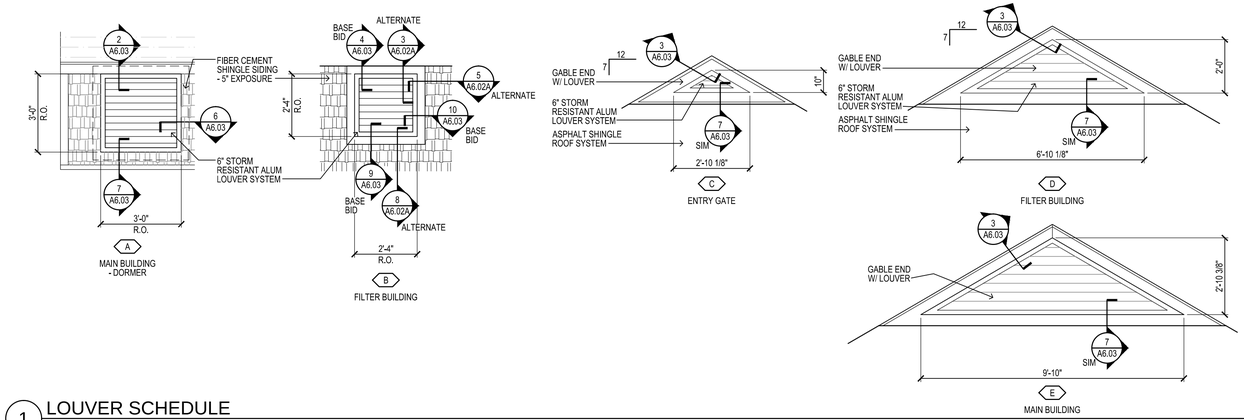

1 LOUVER SCHEDULE
SCALE: 3/8" = 1'-0"

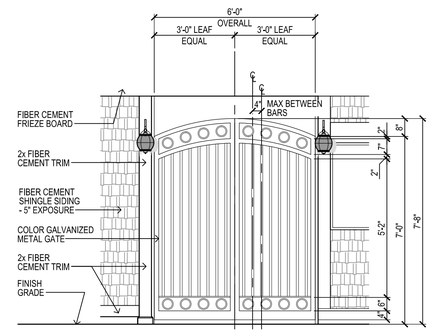

3 GATE ELEVATION
SCALE: 3/8" = 1'-0"

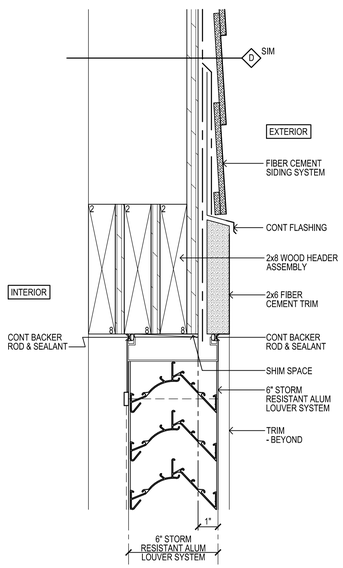

2 LOUVER HEAD
SCALE: 3" = 1'-0"

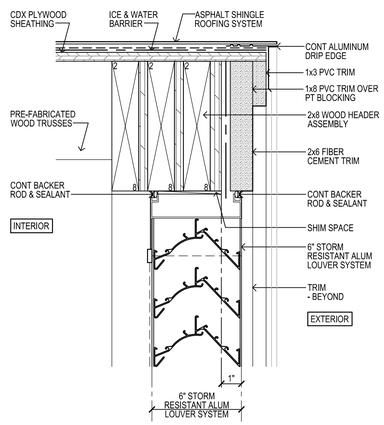

3 LOUVER HEAD AT RAKE
SCALE: 3" = 1'-0"

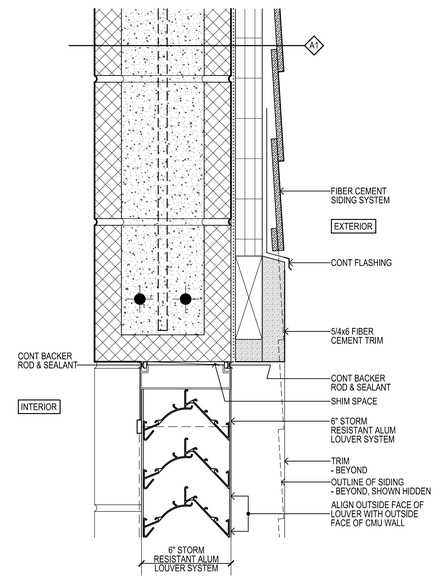

4 LOUVER HEAD
SCALE: 3" = 1'-0"

5 NOT USED
SCALE: 3" = 1'-0"

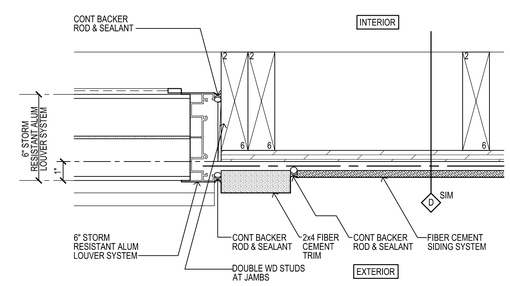

6 LOUVER JAMB
SCALE: 3" = 1'-0"

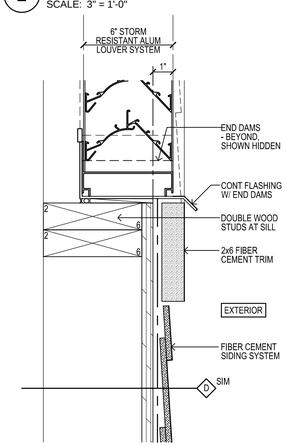

7 LOUVER SILL
SCALE: 3" = 1'-0"

8 NOT USED
SCALE: 3" = 1'-0"

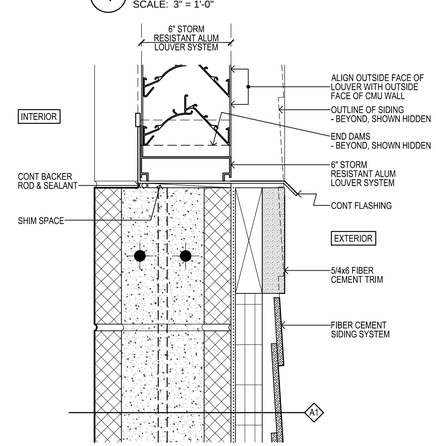

9 LOUVER SILL
SCALE: 3" = 1'-0"

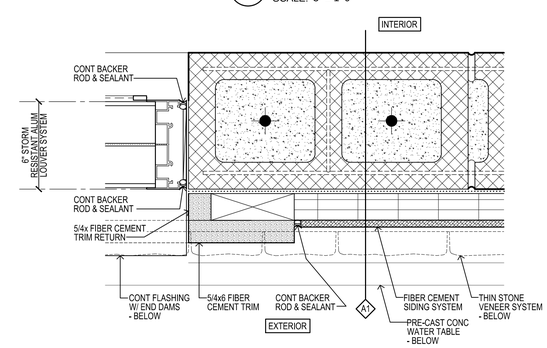

10 LOUVER JAMB
SCALE: 3" = 1'-0"

CONSTRUCTION DOCUMENTS
12/11/15

Weston&Sampson®
273 Dividend Road, Rocky Hill, CT 06067
(860) 513-1473 (800) SAMPSON
www.westonandsampson.com

No.	Date	Dr.By	Ck.By	App.By	Description
		A	P	P	R O V E D

DATE DECEMBER 15, 2015
REGISTERED PROFESSIONAL ENGINEER

STATE OF CONNECTICUT DANIEL J. TERNEY III LICENSED PROFESSIONAL ENGINEER No. 23284

TOWN OF GREENWICH – DEPARTMENT OF PUBLIC WORKS
RITCH AVENUE WEST, GREENWICH, CONNECTICUT
BYRAM PARK POOL REPLACEMENT
LOUVER SCHEDULE & DETAILS

CADD NO.	SCALE:	CONTRACT:	JOB NO.	DR.BY	DSN.BY	CHK.BY	APP.BY
GREENWICH	VARIES	–	2130336	BPM	BPM	JRC	DGT

FILE NO. A6.03

SHEET – OF –

PLUMBING FIXTURE DESIGNATION
- REFER TO PLUMBING SCHEDULE ON PLUMBING DRAWINGS FOR ADDITIONAL INFORMATION

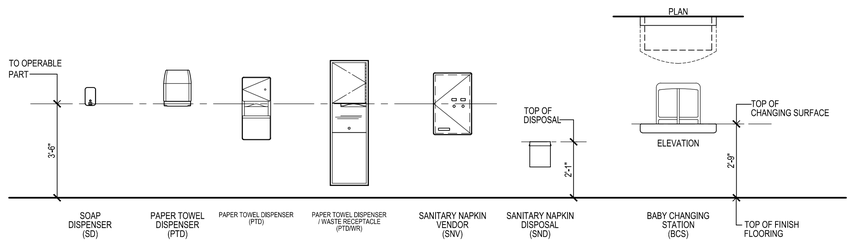

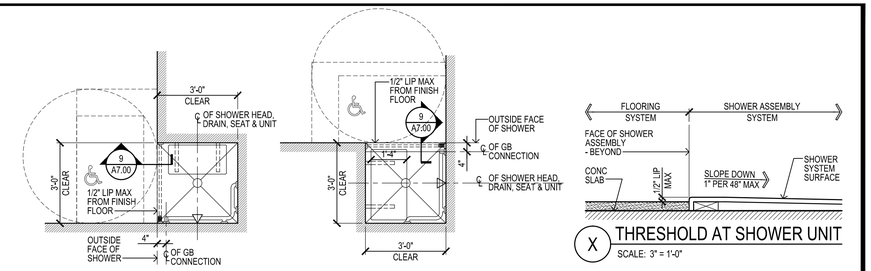

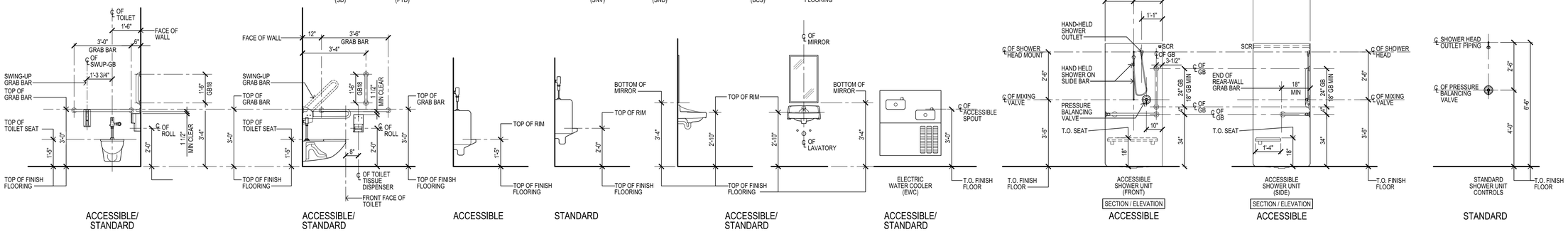

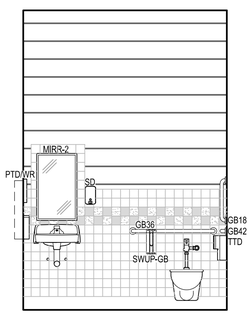

1 INTERIOR ELEVATION
SCALE: 3/8" = 1'-0"

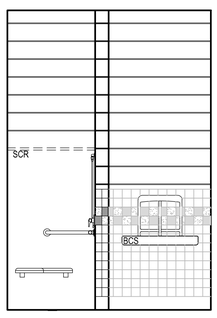

2 INTERIOR ELEVATION
SCALE: 3/8" = 1'-0"

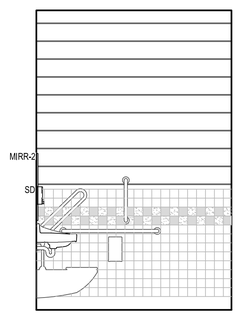

3 INTERIOR ELEVATION
SCALE: 3/8" = 1'-0"

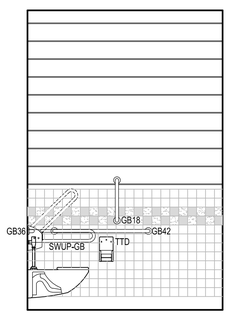

4 INTERIOR ELEVATION
SCALE: 3/8" = 1'-0"

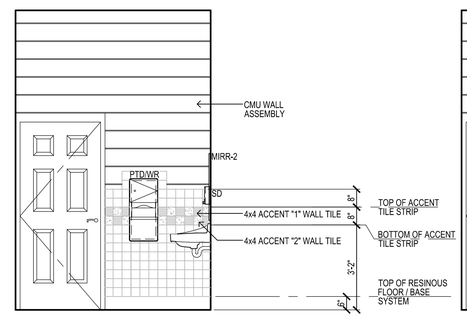

5 INTERIOR ELEVATION
SCALE: 3/8" = 1'-0"

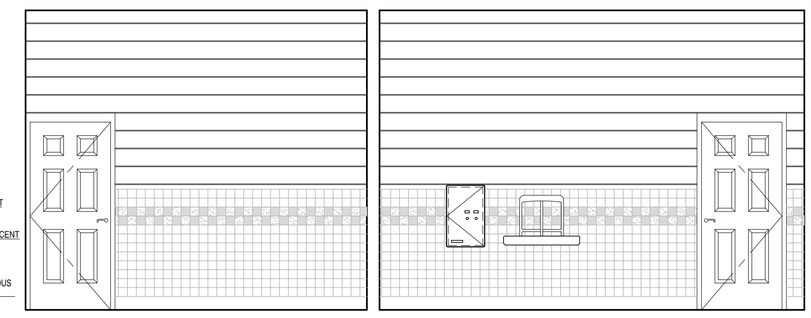

8 INTERIOR ELEVATION
SCALE: 3/8" = 1'-0"

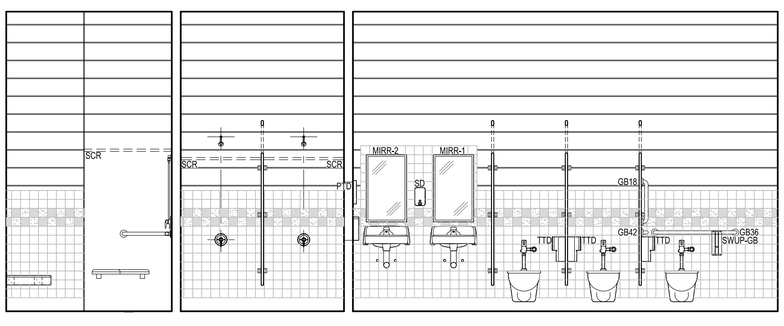

6 INTERIOR ELEVATION
SCALE: 3/8" = 1'-0"

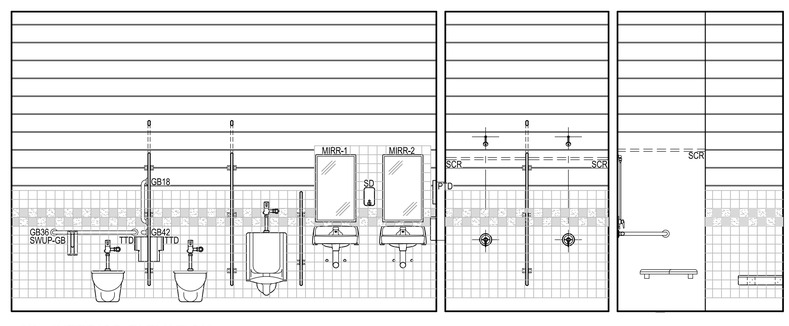

7 INTERIOR ELEVATION
SCALE: 3/8" = 1'-0"

FIXTURE NUMBER	ACCESSORY DESCRIPTION
SWUP-GB	SWING-UP GRAB BAR STAINLESS STEEL, PEENED GRIP STYLE - 1 1/4" Ø
GB18	18" SURFACE MOUNTED GRAB BAR STAINLESS STEEL, PEENED GRIP STYLE - 1 1/4" Ø
GB36	36" SURFACE MOUNTED GRAB BAR STAINLESS STEEL, PEENED GRIP STYLE - 1 1/4" Ø
GB42	42" SURFACE MOUNTED GRAB BAR STAINLESS STEEL, PEENED GRIP STYLE - 1 1/4" Ø
TTD-1	SURFACE MOUNTED DUAL ROLL TOILET TISSUE DISPENSER, STAINLESS STEEL (OWNER FURNISHED, OWNER INSTALLED)
TTD-2	PARTITION MOUNTED, DUAL ROLL TOILET TISSUE DISPENSER, STAINLESS STEEL (OWNER FURNISHED, OWNER INSTALLED)
PTD/WR	SURFACE MOUNTED PAPER TOWER DISPENSER/ WASTE RECEPTACLE, STAINLESS STEEL (OWNER FURNISHED, OWNER INSTALLED)
PTD	SURFACE MOUNTED PAPER TOWER DISPENSER, STAINLESS STEEL (OWNER FURNISHED, OWNER INSTALLED)
SD	SURFACE MOUNTED SOAP DISPENSER, STAINLESS STEEL (OWNER FURNISHED, OWNER INSTALLED)
MIRR-1	SURFACE MOUNTED MIRROR, STAINLESS STEEL
MIRR-2	SURFACE MOUNTED MIRROR, STAINLESS STEEL
SNV	SURFACE MOUNTED SANITARY NAPKIN VENDOR, STAINLESS STEEL
SND	SURFACE MOUNTED SANITARY NAPKIN DISPOSAL, STAINLESS STEEL
TB	TRASH BARREL, STAINLESS STEEL
SCR	SHOWER CURTAIN ROD STAINLESS STEEL

CONSTRUCTION DOCUMENTS
12/11/15

Weston&Sampson®
273 Dividend Road, Rocky Hill, CT 06067
(860) 513-1473 (800) SAMPSON
www.westonandsampson.com

No.	Date	Dr.By	Ck.By	App.By	Description
		A	P	P	R O V E D

DATE DECEMBER 15, 2015
REGISTERED PROFESSIONAL ENGINEER

STATE OF CONNECTICUT ★ DANIEL G. TESNEY III ★ No. 22824 ★ LICENSED ARCHITECT

TOWN OF GREENWICH – DEPARTMENT OF PUBLIC WORKS
RITCH AVENUE WEST, GREENWICH, CONNECTICUT
BYRAM PARK POOL REPLACEMENT

PLUMBING SCHEDULE AND BATHROOM INTERIOR ELEVATIONS

CADD NO.	SCALE:	CONTRACT:	JOB NO.	DR.BY	DSN.BY	CHK.BY	APP.BY
GREENWICH	VARIES	–	2130336	BPM	BPM	JRC	DGT

FILE NO. A7.00

SHEET – OF –

CONSTRUCTION DOCUMENTS
12/11/15

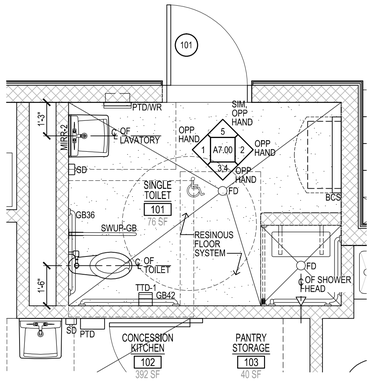

1 LARGE SCALE UNISEX BATHROOM
SCALE: 3/8" = 1'-0"

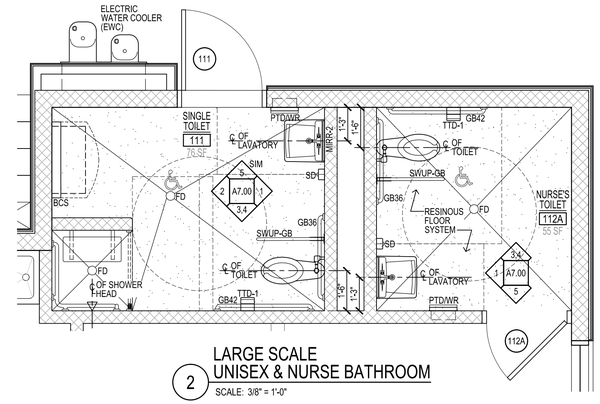

2 LARGE SCALE UNISEX & NURSE BATHROOM
SCALE: 3/8" = 1'-0"

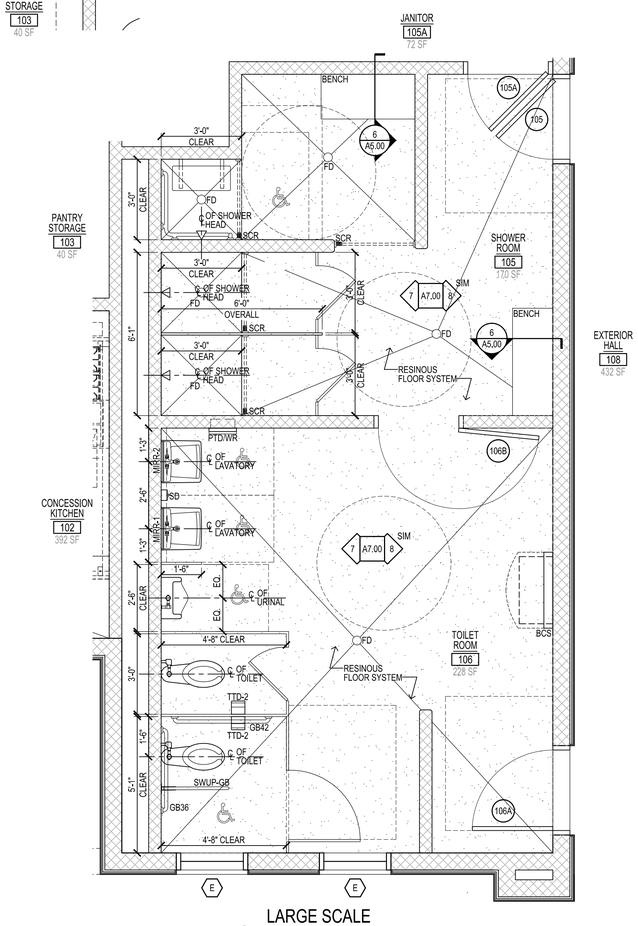

3 LARGE SCALE GANG BATHROOM
SCALE: 3/8" = 1'-0"

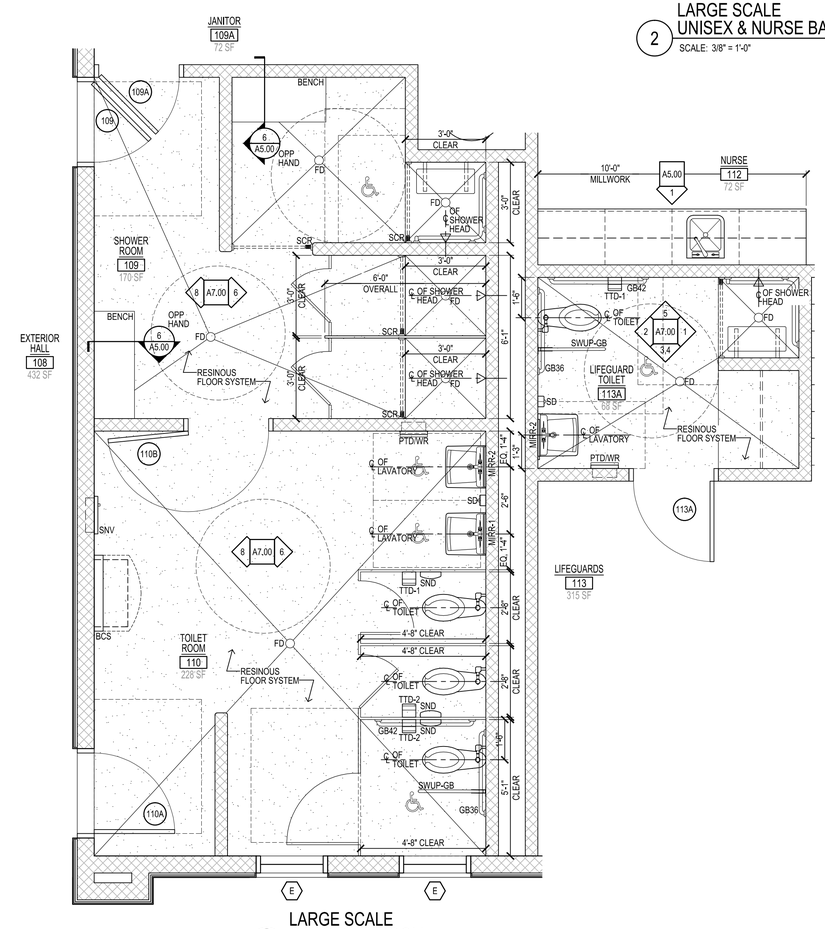

4 LARGE SCALE GANG BATHROOM
SCALE: 3/8" = 1'-0"

Weston&Sampson®
273 Dividend Road, Rocky Hill, CT 06067
(860) 513-1473 (800) SAMPSON
www.westonandsampson.com

No.	Date	Dr.By	Ck.By	App.By	Description
		A	P	P	R O V E D

DATE DECEMBER 15, 2015

REGISTERED PROFESSIONAL ENGINEER

STATE OF CONNECTICUT · PANIER C. TENNEY III · LICENSED ARCHITECT

TOWN OF GREENWICH – DEPARTMENT OF PUBLIC WORKS
RITCH AVENUE WEST, GREENWICH, CONNECTICUT
BYRAM PARK POOL REPLACEMENT

LARGE SCALE BATHROOM FLOOR PLANS

CADD NO.	SCALE:	CONTRACT:	JOB NO.	DR.BY	DSN.BY	CHK.BY	APP.BY
GREENWICH	VARIES	–	2130336	BPM	BPM	JRC	DGT

FILE NO. A7.01

SHEET – OF –

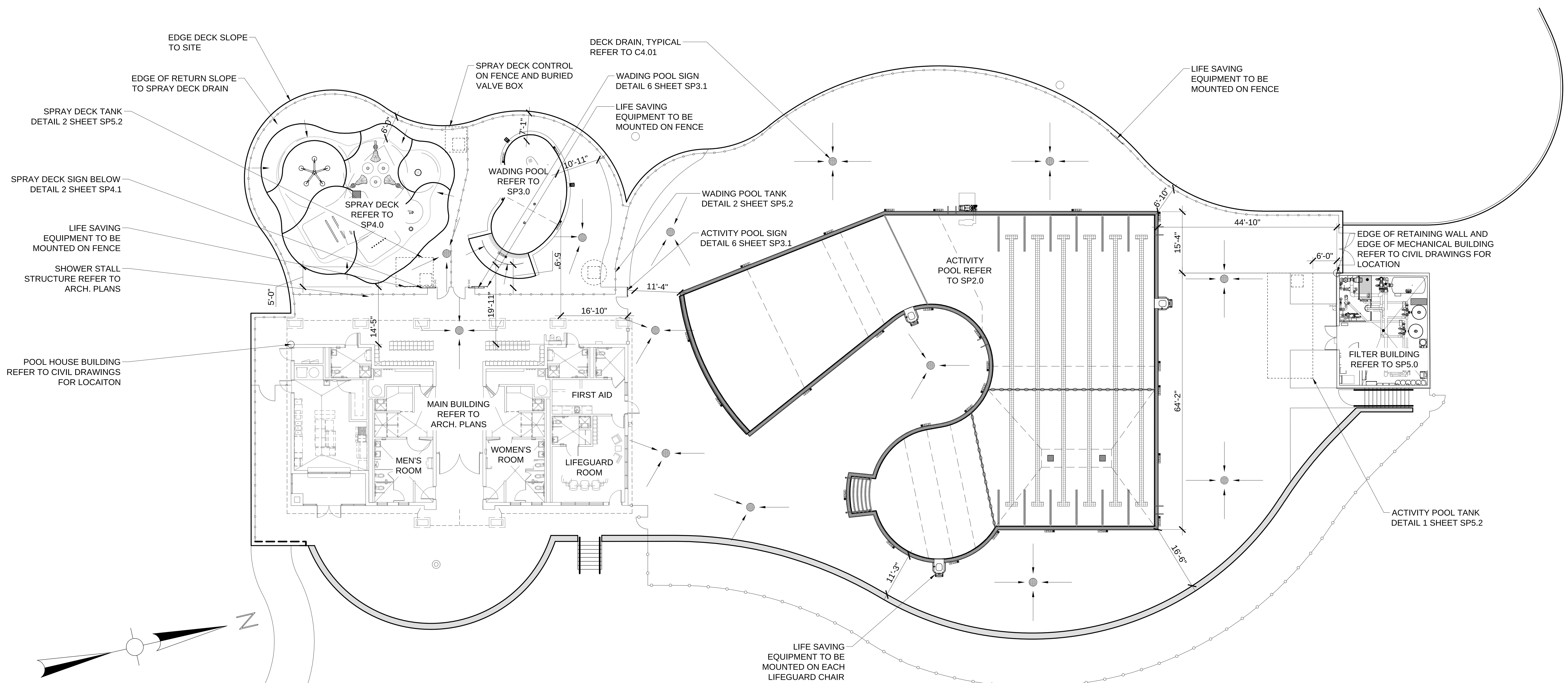

POOL LAYOUT

SCALE: 1/16" = 1'-0"

STRUCTURAL NOTES AND RESTRICTIONS:

1. THE SOIL / EARTH BENEATH EACH POOL AND ITS DECKING SHALL HAVE A SOIL DENSITY AND COMPACTION OF 95% MINIMUM OF THE OPTIMUM MODIFIED STANDARD PROCTOR TEST. NO DEFLECTIONS OR SETTLEMENT OF THE SOILS ARE PERMISSIBLE.
2. PROVIDE ALL REINFORCING STEEL (NEW AND FREE FROM RUST OR SCALE) WITHIN THE POOLS AS:
   a. GRADE #60, #4 REBARS, UNLESS OTHERWISE NOTED.
   b. REBARS SHALL BE SPACED AT 12-IN O.C.B.W.
   c. TIE ALL REBARS AT ALTERNATE INTERSECTIONS.
   d. MINIMUM OVERLAP FOR ALL REBARS SHALL BE 40-BAR DIAMETERS OR 15-INCHES (WHICHEVER IS GREATER).
3. COVER ALL REINFORCING STEEL WITH A MINIMUM 3-INCHES OF CONCRETE.
4. THE REINFORCING INDICATED IS ADEQUATE ONLY WHERE THE BACKFILL IS A WELL-DRAINED, GRAVELLY MATERIAL.
5. THE POOL STRUCTURE SHALL BE 4,500-PSI CONCRETE AT 28 DAYS. THE CONCRETE MIX DESIGN SHALL PROVIDE A 0.45 WATER/CEMENT RATIO AND CONTAIN NO ADMIXTURES UNLESS PRE-APPROVED BY THIS ENGINEER.
6. THE ENTIRE CONCRETE STRUCTURE SHALL BE CURED IN ACCORDANCE WITH SPECIFICATIONS.
7. PROVIDE A WATERTIGHT, LEAK-PROOF STRUCTURE. IN ACCOMPLISHING A WATERTIGHT STRUCTURE, PROVIDE THE FOLLOWING PROCEDURES AND PRACTICES:
   a. FILL AROUND EACH FITTING AND NICHE WITH A NON-SHRINK, EXPANSIVE GROUT.
   b. AVOID HONEYCOMBING. ANY HONEYCOMBING DISCOVERED SHALL BE CHIPPED, CLEANED AND CORRECTED AS REQUIRED BY PROJECT ARCHITECT OR ENGINEER.
8. THE POOL STRUCTURE(S) IS NOT DESIGNED TO WITHSTAND HYDROSTATIC UPLIFT OR GROUNDWATER CONDITIONS THAT COULD CAUSE FLOATING OF THE STRUCTURE. THE HYDROSTATIC RELIEF VALVES AND/OR POOL PLUGS SPECIFIED SHALL BE PROVIDED TO ASSIST IN THIS AREA OF CONCERN. PROVIDE THE EXACT LOCATION OF THE HYDROSTATIC RELIEF VALVES ON THE OFFICIAL "AS-BUILT" RECORD SET OF DRAWING SUBMITTALS.
9. LOCATE 1-CUBIC FOOT OF 3/4-INCH CRUSHED STONE OR GRAVEL BENEATH EACH HYDROSTATIC RELIEF PLUG.
10. PROVIDE A 6-INCH MINIMUM STONE OR GRAVEL THICKNESS BENEATH THE POOL FLOOR (ADDITIONAL THICKNESS MAY BE REQUIRED).

DESIGN CODE COMPLIANCE:

19-13-B33b. PUBLIC POOLS CONNECTICUT MINIMUM STANDARDS FOR SWIMMING POOLS...........09/21/2004
CONNECTICUT PUBLIC SWIMMING POOL DESIGN GUIDE....................1/2010
AMERICAN NATIONAL STANDARDS FOR PUBLIC POOLS - ANSI/NSPI-1.................... 2003
NATIONAL ELECTRICAL CODE(NFPA 70)....................2014
VIRGINIA GRAEME BAKER POOL AND SPA SAFETY ACT.................... 2008
ADAAG....................2010

ENGINEER SEAL:

1. THESE DRAWINGS HAVE BEEN PREPARED FOR EXCLUSIVE USE FOR THE CLIENT AND ARE NOT INTENDED FOR ANY OTHER PURPOSE. TO THE BEST OF MY KNOWLEDGE, THESE DRAWINGS MEET THE REQUIREMENTS SET FORTH BY THE CONNECTICUT DEPARTMENT OF PUBLIC HEALTH (DPH).
2. THE POOLS THAT ARE INCORPORATED INTO THESE DRAWINGS MUST BE CONSTRUCTED IN STRICT ACCORDANCE WITH THE APPROVED DRAWINGS IN ORDER TO QUALIFY FOR A DPH OPERATING PERMIT. ALL CHANGES MUST HAVE WRITTEN APPROVAL FROM WESTON & SAMPSON AND DPH PRIOR TO SUCH CHANGE OR ALTERATION BEING IMPLEMENTED.
3. THE ENGINEER SEAL AFFIXED TO THESE DRAWINGS IS LIMITED TO HYDRAULICS AND DPH COMPLIANCE ONLY.
4. ONLY DRAWINGS FROM WESTON & SAMPSON THAT ARE MARKED "FOR CONSTRUCTION" AND WITH THE DPH APPROVAL NUMBERS AND APPROVAL DATES AFFIXED SHALL BE USED FOR THE POOL CONSTRUCTION IMPLEMENTATION.

DEFINITIONS:

1. CONTRACTOR: PERSON OR ENTITY AUTHORIZED TO CONSTRUCT, INSTALL AND OPERATE A COMMERCIAL POOL, SPA AND THEIR APPURTENANCES.
2. CRITICAL: THIS WORD DESCRIBES DIMENSIONS THAT SHALL NOT BE SUBJECT TO DEVIATION OR ERRORS FOR ANY REASON. VIOLATION OF A CRITICAL DIMENSION MIGHT SUBJECT THE POOL TO A POTENTIAL VARIANCE ACTION OR A PERMANENT WITHHOLDING OF A FUTURE OPERATING CERTIFICATE. WESTON & SAMPSON CONSIDERS ALL DIMENSIONS CONTAINED WITH THE DRAWINGS AS VITAL; HOWEVER, THE WORD CRITICAL IS ADDED TO ATTRACT THE ATTENTION OF THE CONTRACTOR.
3. POOL: THE USE OF THE WORD POOL WITHIN THESE NOTES MAY ALSO REFER TO A POOL OR KIDDIE POOL. PROVIDE WRITTEN QUESTIONS TO THE ENGINEER FOR CLARIFICATIONS.
4. PROVIDE: OBTAIN, PURCHASE, SUPPLY, INSTALL, COMMISSION AND WARRANTY COMPLETELY IN ACCORDANCE WITH ALL CODES, RULES, REGULATIONS AND THE REQUIREMENTS OF THE DRAWINGS AND TECHNICAL SPECIFICATIONS.
5. RAIL: REFERS TO A HANDRAIL, LADDER, OR GRAB RAIL LOCATED AT A POOL. IT PROVIDES BATHER SUPPORT ASSISTANCE WHEN ENTERING OR EXITING A POOL.
6. SLIP-RESISTANT: A HORIZONTAL, NON-SKID TEXTURED SURFACE WITH A COEFFICIENT OF FRICTION RATED AT A MINIMUM 0.6. THE RESPONSIBILITY FOR VERIFICATION AND CONFIRMATION OF COMPLIANCE WITH THIS FRICTION REQUIREMENT IS SOLELY THAT OF THE CONTRACTOR. CERTIFIED MANUFACTURER BROCHURES MAY BE SUBMITTED TO WESTON & SAMPSON FOR APPROVAL. THE TERM "NON-SLIP" SHALL BE CONSIDERED THE SAME AS "SLIP-RESISTANT".
7. VISUAL BARRIER: A CLOSELY-PLANTED, DENSE GROUPING OF PLANTS OR APPROVED ARCHITECTURAL BARRIER THAT IS 42-INCHES HIGH MINIMUM.

GENERAL CONSTRUCTION REQUIREMENTS:

1. THE MINIMUM VERTICAL CLEARANCE ABOVE POOL WATER AND DECK IS 7 FEET.
2. POOL WALL / FLOOR INSTALLATION DIMENSIONAL REQUIREMENTS:
   A. THE UPPER PART OF THE POOL WALLS IN AREAS OF 5 FEET DEPTH OR LESS SHALL BE WITHIN 5 DEGREES OF VERTICAL FOR A MINIMUM DEPTH OF 2.5 FEET AND THE RADIUS JOINING THE UPPER SECTION OF THE FLOOR SHALL NOT EXCEED 2.5 FEET.
   B. THE UPPER PART OF THE POOL WALLS OVER 5 FEET DEEP SHALL BE WITHIN 5 DEGREES OF VERTICAL FOR A MINIMUM DEPTH EQUAL TO THE POOL DEPTH MINUS 2.5 FEET AND THE RADIUS JOINING THIS UPPER SECTION TO THE FLOOR SHALL NOT EXCEED 2.5 FEET..
3. REFER TO THE POOL DRAWINGS FOR FINISHING SURFACING MATERIALS FOR WALLS, FLOOR, AND COPING. FINISH COLORS, AND MATERIALS ARE SPECIFIED IN THESE DRAWINGS. THE INTERIOR SURFACE SHALL BE REFLECTIVE AND SLIP-RESISTANT IN NATURE TO ASSIST IN THE VIEWING OF PERSONS UNDERWATER. UNLESS OTHERWISE NOTED HEREIN, A MAXIMUM OF 0.5-INCHES SHALL BE PROVIDED FOR INTERIOR FINISHES FROM THE BEAM, WALLS, AND FLOORS OF THE POOL.
4. REFER TO PLUMBING DRAWINGS FOR HOSE BIB AND WATER SUPPLY LOCATIONS.
5. ALL DECKS THAT ARE LESS THAN 4-FT WIDE SHALL BE OBSTRUCTED TO ASSIST IN PREVENTING BATHER'S ACCESS.
6. DECK MATERIAL TO BE IMPERVIOUS CAST IN PLACE CONCRETE WITH AN EXPOSED AGGREGATE FINISH.

DEPTH MARKERS:

1. PERMANENT DEPTH MARKERS SHALL BE PLACED ON THE UPPER-MOST POOL WALLS AND DECK EDGE AT THE SHALLOW-END, SLOPE BREAK, AND DEEP END AREAS OF THE POOL PER THE REQUIREMENTS OF THESE DRAWINGS. ADDITIONAL DEPTH MARKINGS SHALL BE PLACED TO MAINTAIN A MAXIMUM 25-FOOT SPACING BETWEEN ALL MARKINGS. THE LETTERING SHALL BE A CONTRASTING COLOR TO THE BACKGROUND.
2. EACH DEPTH MARKING AND "NO DIVING" MARKING LOCATED ON THE DECK SURFACE (WITHIN 2-FEET OF THE WATER'S EDGE) SHALL BE OF A SLIP-RESISTANT MATERIAL, SHALL BE 4-INCH HIGH, NOT TO EXCEED SPACING OF 25-FEET AROUND POOL AND BE CONTRASTING IN COLOR. AN APPROVED UNIVERSAL "NO DIVING SYMBOL" (USING THE COLOR "RED") MAY BE SUBSTITUTED FOR THE ABOVE "NO DIVING" MARKING. THE ASSOCIATED DEPTH SHALL BE PRESENT ON THE WATERLINE LINE OF THE POOL.
3. THE MINIMUM LETTER HEIGHT OF EACH DEPTH MARKING SHALL BE 4-INCHES.
4. THE ONLY AUTHORIZED ABBREVIATION FOR "FEET", "INCHES", AND "METERS" SHALL BE "FT", "IN" AND "M" RESPECTIVELY.
5. ALL DEPTH MARKINGS SHALL BE LOCATED TO ACCURATELY DEPICT THE ACTUAL WATER DEPTH WITHIN 3-INCHES PROPER DETERMINATION OF THIS RULE COMPLIANCE SHALL REQUIRE MEASURING THE WATER DEPTH AT A LOCATION 3-FEET HORIZONTAL FROM THE VERTICAL WALL DEPTH MARKING.
6. THE DEPTH AT THE DEEPEST POINT/MAIN DRAIN GRATE SHALL NOT DEVIATE MORE THAN 3-INCHES FROM THE SIDEWALL DEPTH MARKINGS AT THAT LOCATION.

BATH HOUSE:

1. SHOWER SHALL SUPPLY A MINIMUM OF 90°F WATER WITH A TEMPERED MIXING VALVE.
2. BATHHOUSE FLOORING SHALL BE IMPERVIOUS IN ACCORDANCE WITH DPH REQUIREMENTS. FLOOR DRAINS SHALL PROVIDED.

FENCING:

PROVIDE A 48-INCH HIGH (MINIMUM) NON-CLIMBABLE FENCING BARRIER AROUND THE POOL AREA (TO MEET STATE CODE). THE FENCING SHALL INCLUDE SELF-CLOSING GATES AND HORIZONTAL SPACE BETWEEN VERTICAL MEMBERS OF THE ENCLOSURE SHALL NOT EXCEED TWO INCHES.

1. THE HEIGHT OF ANY OPENING UNDER THE BOTTOM OF THE ENCLOSURE SHALL NOT EXCEED TWO INCHES.
2. FENCES SHALL HAVE A SELF-CLOSING GATE, WITH A LATCH AT LEAST 3.5-FEET ABOVE THE GROUND, WHICH CAN BE LOCKED.

WATER SUPPLY REQUIREMENTS:

1. THE CONTRACTOR SHALL PROVIDE A HOSE BIBB LOCATED A MINIMUM OF 10-FEET/MAXIMUM OF 20-FEET FROM EACH POOL'S WATER-EDGE. REFER TO ARCHITECTURAL DRAWINGS FOR THE DECK SHOWER DESIGN. INCLUDE A VACUUM BREAKER WITH EACH HOSE BIBB.
2. WATER INTRODUCED INTO THE POOL, WADING POOL, OR SPRAY DECK SYSTEMS SHALL BE SUPPLIED THROUGH AN AIR GAP. THE AIR GAP SHALL BE TWICE THE SIZE OF THE PIPE DIAMETER WITH A MINIMUM OF 3", OR AS SHOWN ON CONTRACT PLANS. THIS IS REQUIRED TO COMPLY WITH THE REQUIREMENTS OF PUBLIC HEALTH CODE, SECTION 19-13-B37, SECTION 19-13-B38(B), AND SECTION 19-13-B45.
3. PROVIDE AN ACCEPTABLE 1-1/2-IN. COLD WATER SUPPLY TO THE FILTRATION SYSTEM WITH A MINIMUM OF 60-PSI AVAILABLE PRESSURE. POTABLE WATER QUALITY SHALL COMPLY WITH DPH REQUIREMENTS.

COORDINATION NOTES:

THE GENERAL CONTRACTOR SHALL BE RESPONSIBLE FOR COORDINATION OF THE FOLLOWING ISSUES;

- 2% DECK SLOPE.
- DRAINAGE OF DECK.
- SHOWERS, HOSE BIBBS WITH VACUUM BREAKERS, AND ELECTRICAL RECEPTACLES FOR POOL CLEANER.
- MUNICIPAL WATER SUPPLY TO COLLECTOR TANKS AND WASTE WATER REMOVAL FROM EQUIPMENT ROOM SHALL DISCHARGE TO MUNICIPAL WASTE WATER SYSTEM.
- SLIP RESISTANT RESTROOM TILE & FLOOR DRAIN.

FAILURE TO COORDINATE THESE ISSUES CAN RESULT IN SIGNIFICANT DPH PENALTIES UPON COMPLETION OF THE PROJECT.

PIPING INSTALLATION REQUIREMENTS:

1. ALL PIPING SHALL BE SCHEDULE 80 PVC. ALL PIPING SHALL BE STAMPED WITH THE MANUFACTURER'S MARKING THAT IT IS APPROVED FOR USE WITH POTABLE WATER (NSF-PW). PLASTIC PIPE EXPOSED TO SUNLIGHT SHALL BE COATED FOR UV PROTECTION.
2. THE PIPING DIAGRAMS AND SIZES SHOWN IN THESE DRAWINGS SHALL BE FOLLOWED WITHOUT EXCEPTION UNLESS WRITTEN AUTHORIZATION FROM ENGINEER IS PROVIDED.
3. ALL POOL PERIMETER PIPING SHALL BE PLACED AS CLOSE TO THE POOL BEAM AS POSSIBLE.
4. THE PIPING SYSTEMS INDICATED IN THESE DRAWINGS ARE SHOWN IN A DIAGRAMMATIC VIEW ONLY. THE CONTRACTOR SHALL PROVIDE ALL PIPING AND FITTINGS REQUIRED FOR THE COMPLETE INSTALLATION.
5. THE CONTRACTOR SHALL PROVIDE AND COMPLY WITH ALL PIPING INSPECTIONS THAT MAY BE REQUIRED BY DPH AND LOCAL BUILDING OFFICIALS.
6. THE CONTRACTOR SHALL PROVIDE PIPE HANGER DETAILS TO ENGINEER FOR WRITTEN APPROVAL PRIOR TO THE INSTALLATION.
7. THE MAIN DRAIN PIPING SHALL BE INSTALLED TO COMPLY WITH THE FOLLOWING REQUIREMENTS:
   A. THE MAIN DRAIN GRAVITY FLOW PIPE SHALL HAVE A SLOPE TOWARD THE COLLECTOR TANK.
   B. AT NO POSITION SHALL THE MAIN DRAIN PIPING CHANGE SLOPES SO AS TO ALLOW AN AIR POCKET OR TRAP TO OCCUR.
8. THE STATIC PIPING SHALL BE INSTALLED TO COMPLY WITH THE FOLLOWING REQUIREMENTS:
   A. THE STATIC PIPING SHALL BE INSTALLED SO AS TO ALLOW THE STATIC PIPE TO HAVE A SLOPE DOWNWARD TOWARD THE COLLECTOR TANK.
9. PIPING PRESSURE TESTING SHALL BE COORDINATED BY THE POOL CONTRACTOR AND SHALL BE INCLUDED IN HIS COST. THE ENGINEER SHALL BE ONSITE DURING PRESSURE TESTING. ALL PIPING SHALL CONFORM TO ACCEPTED WORKMANSHIP STANDARDS AND SHALL BE TESTED AS FOLLOWS:
   A. ALL PIPING SHALL BE TESTED BY MEANS OF WATER PRESSURE TO A MINIMUM OF 35 P.S.I FOR 3 HOURS PRIOR TO INSTALLATION OF THE DECK. MAINTAIN THE PRESSURE TEST ON THE PIPING SYSTEM THROUGHOUT THE DECKING PLACEMENT TASKS.
10. EXTEND ALL PIPING TO ITS SPECIFIC FILTRATION SYSTEM OR COLLECTOR TANK. DO NOT CONNECT THE PIPING TO THE FILTRATION SYSTEM UNTIL THE DECKING IS IN PLACE AND THE PRESSURE-TEST IS COMPLETED, APPROVED, AND REMOVED FROM THE PIPING.

Weston&Sampson®
273 Dividend Road, Rocky Hill, CT 06067
(860) 513-1473 (800) SAMPSON
www.westonandsampson.com

No.	Date	Dr.By	Ck.By	App.By	Description

A P P R O V E D
REGISTERED PROFESSIONAL ENGINEER — 12-15-15 DATE

STATE OF CONNECTICUT ★ CHRISTOPHER B. WESTER ★ No. 17476 LICENSED PROFESSIONAL ENGINEER

TOWN OF GREENWICH – DEPARTMENT OF PUBLIC WORKS
RITCH AVENUE WEST, GREENWICH, CONNECTICUT
BYRAM PARK POOL REPLACEMENT
SITE PLAN AND NOTES

CADD NO.	SCALE:	CONTRACT:	JOB NO.	DR.BY	DSN.BY	CHK.BY	APP.BY
GREENWICH	AS NOTED	–	2130336	S.A.A.	M.P.M.	–	–

SP1.0
FILE NO.
SHEET – OF –

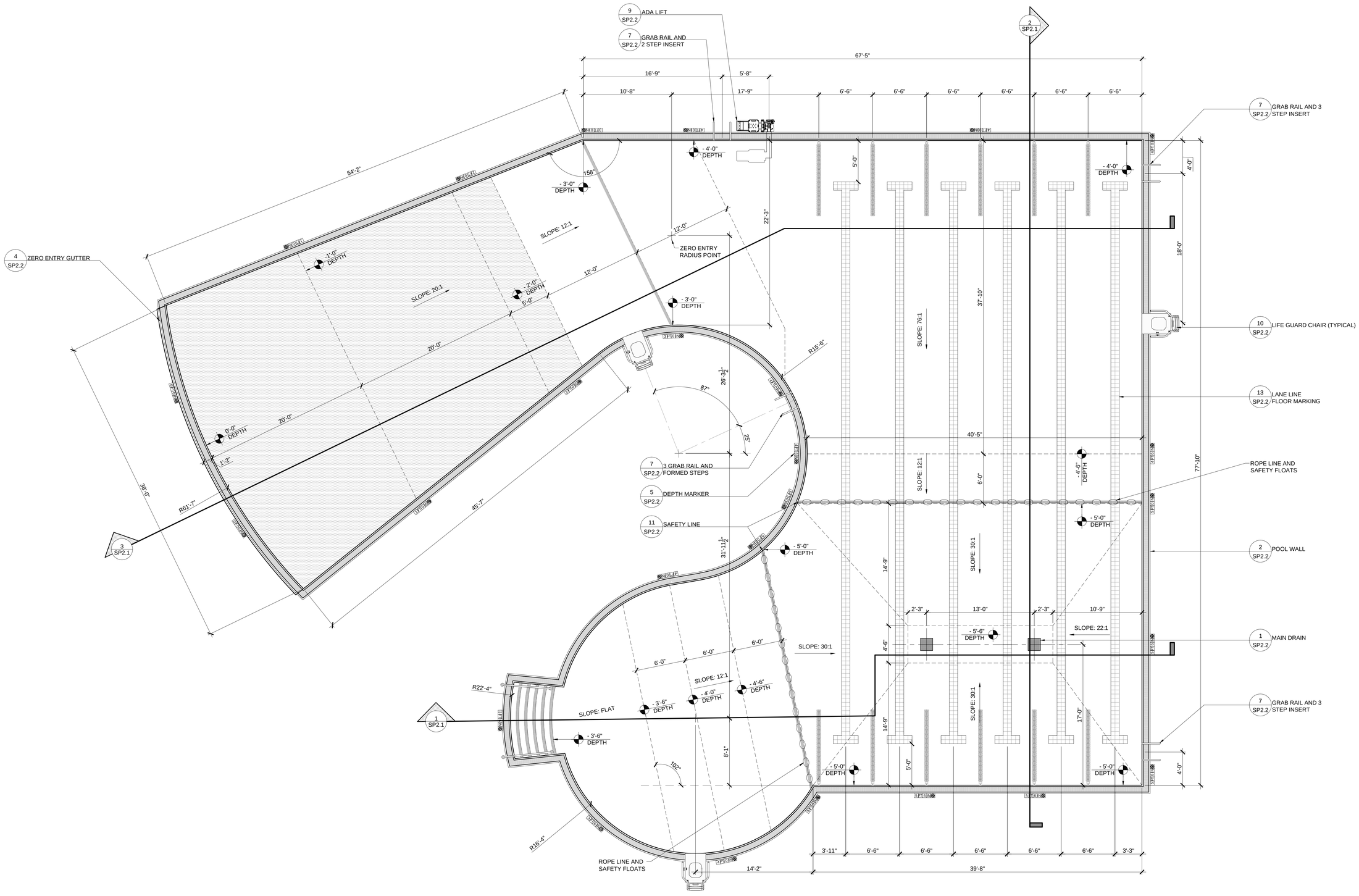

ACTIVITY POOL PLAN

SCALE: 3/16" = 1'-0"

0 5' 10' 15'

Weston&Sampson®
273 Dividend Road, Rocky Hill, CT 06067
(860) 513-1473 (800) SAMPSON
www.westonandsampson.com

No.	Date	Dr.By	Ck.By	App.By	Description

APPROVED

12-15-15
DATE

REGISTERED PROFESSIONAL ENGINEER

TOWN OF GREENWICH – DEPARTMENT OF PUBLIC WORKS
RITCH AVENUE WEST, GREENWICH, CONNECTICUT

BYRAM PARK POOL REPLACEMENT

ACTIVITY POOL PLAN

CADD NO.	SCALE:	CONTRACT:	JOB NO.	DR.BY	DSN.BY	CHK.BY	APP.BY
GREENWICH	AS NOTED	–	2130336	S.A.A.	M.P.M.	–	–

FILE NO. SP2.0

SHEET – OF –

12/16/2015 12:38:04PM G:\CADI0-Current_Set\Sheets\SP-2.0 ACTIVITY POOL PLAN.dwg

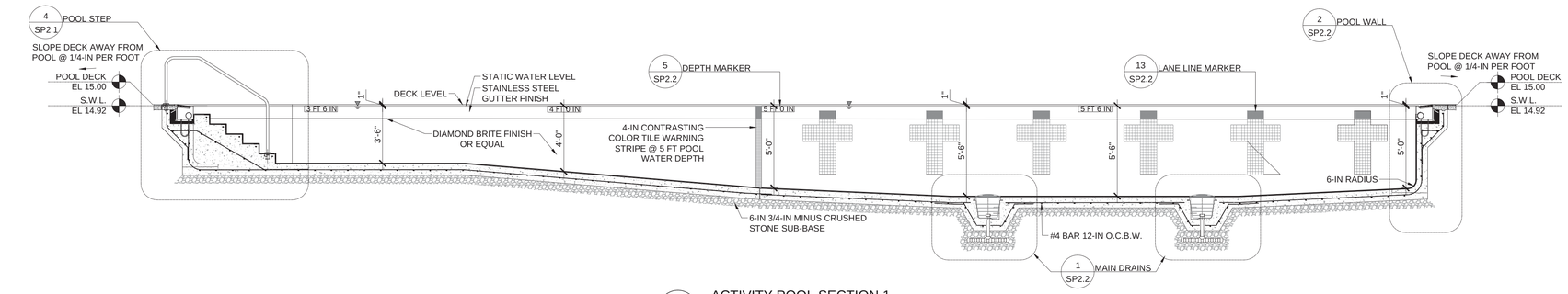

1 ACTIVITY POOL SECTION 1

SCALE: 1/4" = 1'-0"

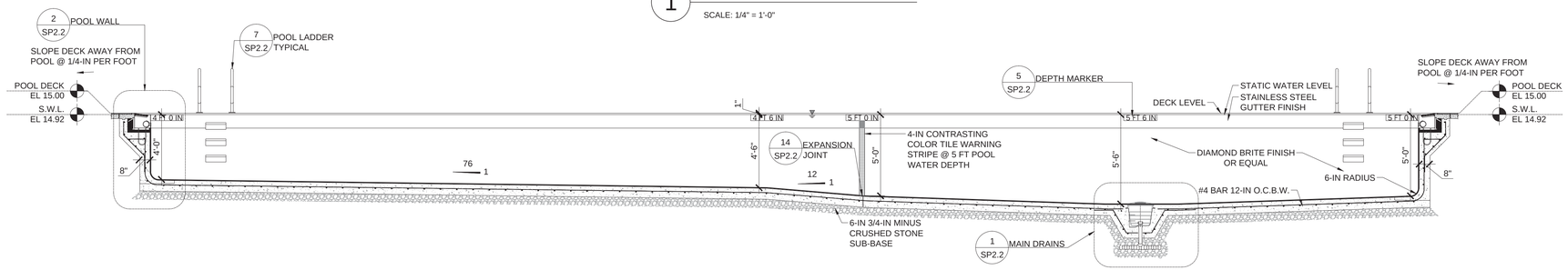

2 ACTIVITY POOL SECTION 2

SCALE: 1/4" = 1'-0"

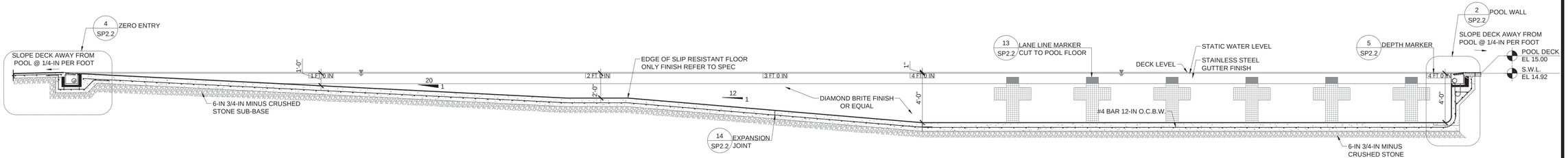

3 ACTIVITY POOL SECTION 3

SCALE: 1/4" = 1'-0"

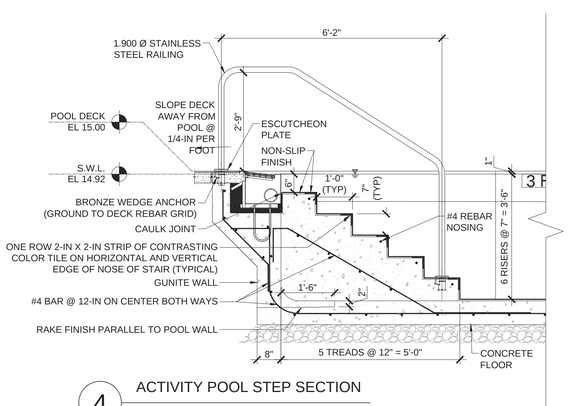

4 ACTIVITY POOL STEP SECTION

SCALE: 1/2" = 1'-0"

Weston&Sampson®
273 Dividend Road, Rocky Hill, CT 06067
(860) 513-1473 (800) SAMPSON
www.westonandsampson.com

No.	Date	Dr.By	Ck.By	App.By	Description
					APPROVED

12-15-15
DATE

REGISTERED PROFESSIONAL ENGINEER

TOWN OF GREENWICH – DEPARTMENT OF PUBLIC WORKS
RITCH AVENUE WEST, GREENWICH, CONNECTICUT

BYRAM PARK POOL REPLACEMENT

ACTIVITY POOL SECTION

CADD NO.	SCALE:	CONTRACT:	JOB NO.	DR.BY	DSN.BY	CHK.BY	APP.BY
GREENWICH	AS NOTED	–	2130336	S.A.A.	M.P.M.	–	–

FILE NO. SP2.1

SHEET – OF –

01/03/2016 10:55:04AM G:\CADD-Current_Set\Sheets\SP-2.1 ACTIVITY POOL SECTION.dwg

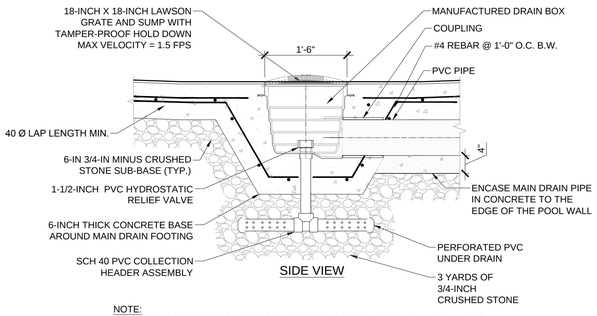

NOTE:
ALL MAIN DRAINS, MAIN DRAIN GRATES, MAIN DRAIN PIPING ARE DESIGNED AND SHALL BE BUILT ACCORDING TO THE *VIRGINIA GRAEME BAKER POOL & SPA SAFETY ACT*

1 MAIN DRAIN

SCALE: 3/4" = 1'-0"

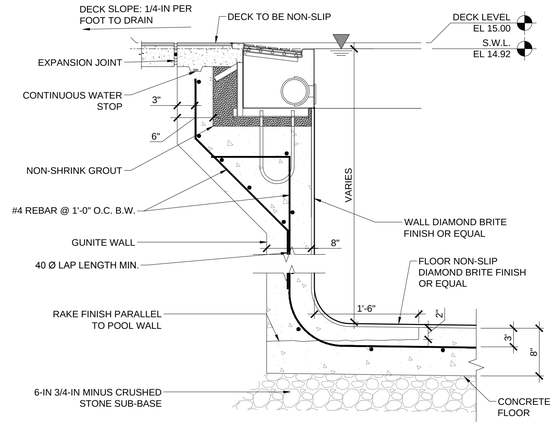

2 POOL WALL

SCALE: 1" = 1'-0"

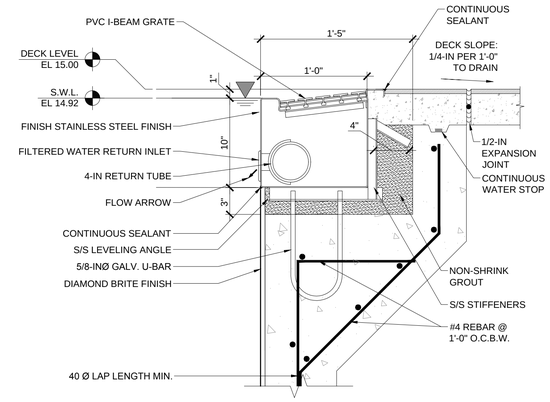

3 GUTTER

SCALE: 1-1/2" = 1'-0"

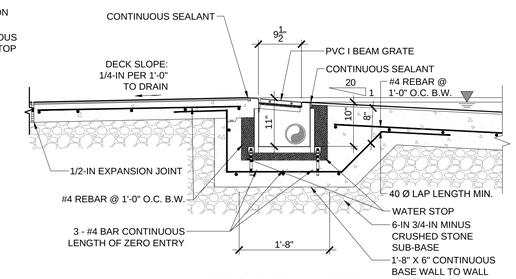

4 ZERO ENTRY GUTTER

SCALE: 3/4" = 1'-0"

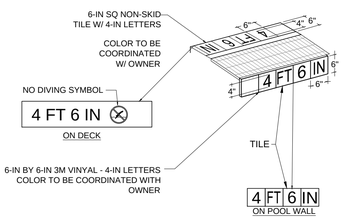

NOTE: ALL TEXT SHALL BE DARK IN COLOR ON WHITE OR LIGHT CONTRASTING BACKGROUND

NOTE:
1. ALL DEPTH MARKERS SHALL SAY: __FT __IN
2. NO DIVING SHALL BE NO DIVING SYMBOL OR SAY: NO DIVING
3. DECK TILE REQUIRED TO BE NON-SLIP

5 DEPTH MARKER

SCALE: N.T.S.

THESE LETTERS SHALL CONTRAST THE BACK GROUND COLOR AND BE NO LESS THAN 1 INCH HIGH

POOL RULES

1. NO FOOD, DRINK, GLASS OR ANIMALS IN POOL OR ON POOL DECK
2. SHOWER BEFORE ENTERING POOL
3. BATHING LOAD: _____ PERSONS MAXIMUM
4. POOL HOURS: ___ AM TO ___ PM
5. NOT INTENDED FOR NIGHTTIME SWIMMING
6. ALL PERSONS SHALL BATHE WITH WARM WATER AND SOAP BEFORE ENTERING THE POOL.
7. ANY PERSONS KNOWN OR SUSPECTED OF HAVING A COMMUNICABLE DISEASE SHALL NOT USE THE POOL.
8. SPITTING OR BLOWING THE NOSE IN THE POOL IS PROHIBITED.
9. RUNNING, BOISTEROUS OR ROUGH PLAY (EXCEPT SUPERVISED WATER SPORTS) IS PROHIBITED.

NO DIVING

THIS SIGN IS MINIMUM REQUIRED TO MEET CODE, THIS OR EQUIVALENT SHALL BE INSTALLED PRIOR TO HEALTH INSPECTION. SIGN MAY BE ADJUSTED FOR AESTHETICS AT ANY TIME BUT SHALL HAVE MINIMUM SHOWN. THIS SIGN SHALL BE MADE OF UV RESISTANT POLYETHYLENE.

POOL RULES SIGN PER 19-13-B33b. PUBLIC POOLS

1. POOL RULES MUST BE DISPLAYED ON A SIGN AT OR NEAR THE POOL SIDE AND MUST BE LEGIBLE FROM THE POOL DECK.
2. RULES SHALL BE STATED AS CODE REQUIRES AS A MINIMUM.
3. LETTERING FOR THE POOL RULES SIGN IS A T LEAST 1-INCH HIGH AND "NO DIVING" IS AT LEAST 4-INCH HIGH.
4. LIFEGUARDS. WHEN NO LIFEGUARD SERVICE IS IN EFFECT A WARNING SIGN SHALL BE PLACED IN PLAIN VIEW AND SHALL STATE "WARNING - NO LIFEGUARD ON DUTY" WITH LEGIBLE LETTERS, AT LEAST FOUR INCHES HIGH. THIS WARNING SHALL BE EASILY VISIBLE FROM ALL ENTRY POINTS INTO THE POOL AREA.

6 POOL SIGN

SCALE: N.T.S.

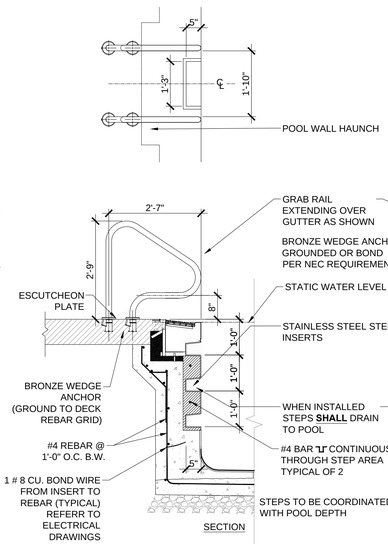

7 GRAB RAIL AND STEP INSETS

SCALE: 1/2" = 1'-0"

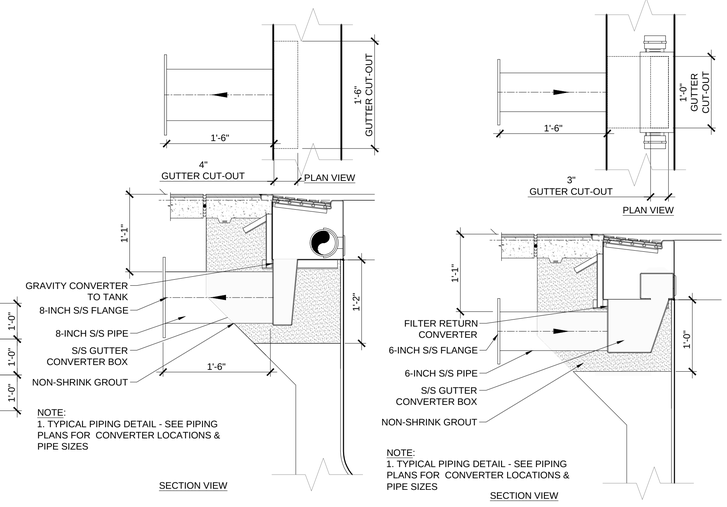

8 GUTTER AND FILTER RETURN CONVERTER

SCALE: 1" = 1'-0"

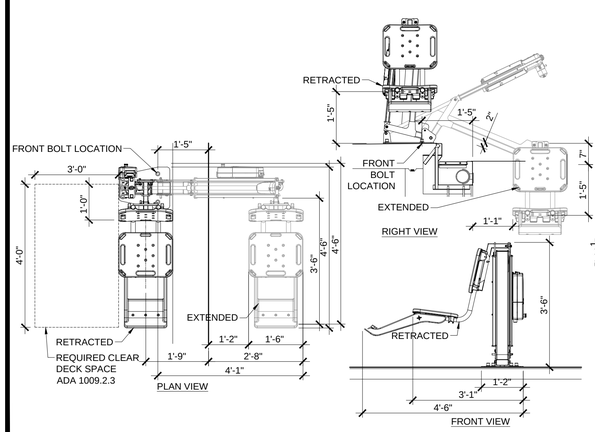

9 ADA LIFT

SCALE: 1/2" = 1'-0"

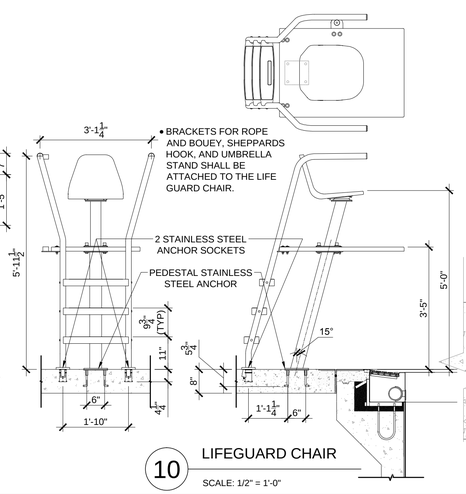

10 LIFEGUARD CHAIR

SCALE: 1/2" = 1'-0"

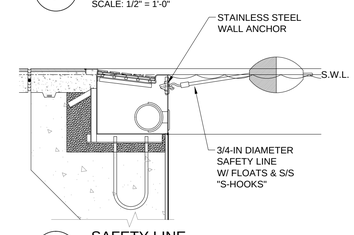

11 SAFETY LINE

SCALE: 1" = 1'-0"

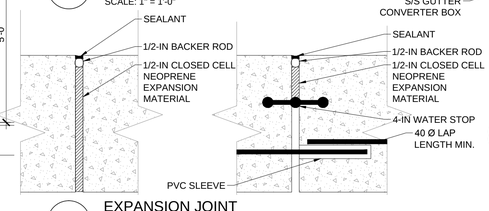

14 EXPANSION JOINT

SCALE: N.T.S.

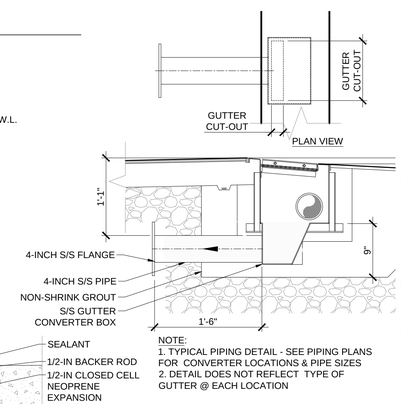

12 ZERO ENTRY GUTTER CONVERTER

SCALE: 1" = 1'-0"

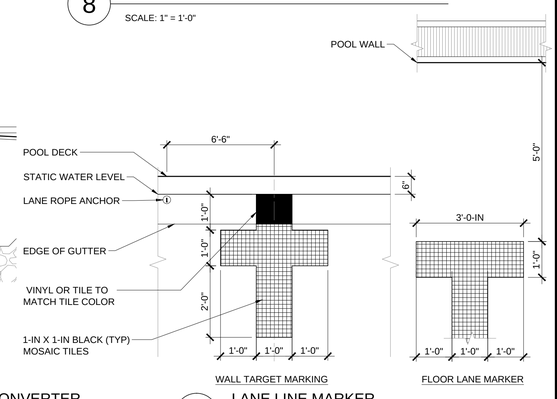

13 LANE LINE MARKER

SCALE: 1/2" = 1'-0"

Weston&Sampson®
273 Dividend Road, Rocky Hill, CT 06067
(860) 513-1473 (800) SAMPSON
www.westonandsampson.com

No.	Date	Dr.By	Ck.By	App.By	Description
					APPROVED

12-15-15
DATE

REGISTERED PROFESSIONAL ENGINEER

TOWN OF GREENWICH – DEPARTMENT OF PUBLIC WORKS
RITCH AVENUE WEST, GREENWICH, CONNECTICUT
BYRAM PARK POOL REPLACEMENT

ACTIVITY POOL DETAILS

CADD NO.	SCALE:	CONTRACT:	JOB NO.	DR.BY	DSN.BY	CHK.BY	APP.BY
GREENWICH	AS NOTED	–	2130336	S.A.A.	M.P.M.	–	–

FILE NO. SP2.2

SHEET – OF –

12/16/2015 12:47:22PM G:\CADD-Current_Set\Sheets\SP-2.2 ACTIVITY POOL DETAIL.dwg

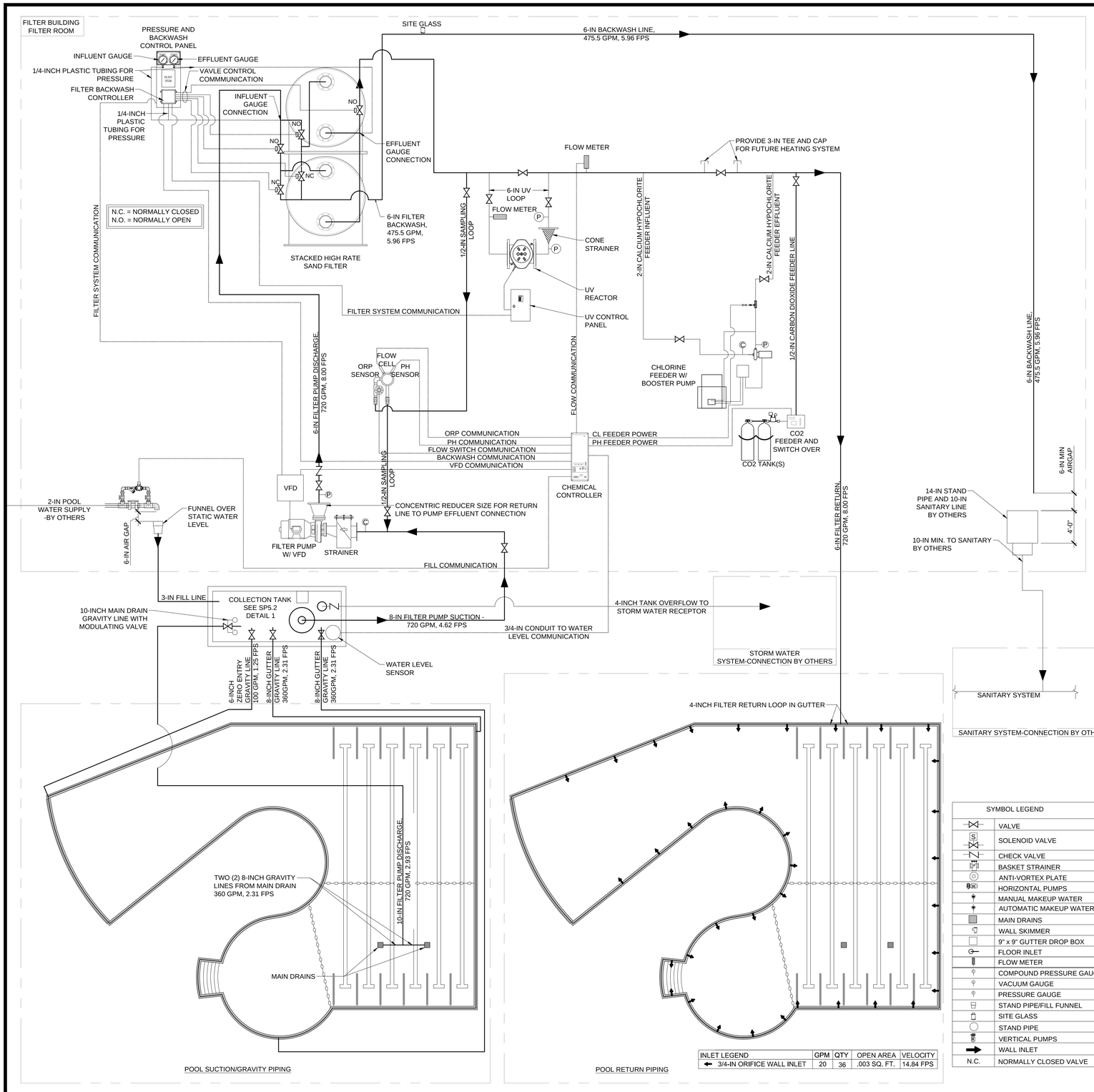

INLET LEGEND	GPM	QTY	OPEN AREA	VELOCITY
3/4-IN ORIFICE WALL INLET	20	36	.003 SQ. FT.	14.84 FPS

SYMBOL LEGEND

	VALVE
S	SOLENOID VALVE
	CHECK VALVE
	BASKET STRAINER
	ANTI-VORTEX PLATE
	HORIZONTAL PUMPS
	MANUAL MAKEUP WATER
	AUTOMATIC MAKEUP WATER
	MAIN DRAINS
	WALL SKIMMER
	9" x 9" GUTTER DROP BOX
	FLOOR INLET
	FLOW METER
	COMPOUND PRESSURE GAUGE
	VACUUM GAUGE
	PRESSURE GAUGE
	STAND PIPE/FILL FUNNEL
	SITE GLASS
	STAND PIPE
	VERTICAL PUMPS
	WALL INLET
N.C.	NORMALLY CLOSED VALVE

ACTIVITY POOL EQUIPMENT SCHEDULE

PERIMETER OVERFLOW AND RECIRCULATION SYSTEM

MARK	QTY	ITEM	MANUFACTURER	CAT NO.	DESCRIPTION
1	2	MAIN DRAIN GRATE & SUMP	LAWSON AQUATICS	MLD-FG-1818-WT	18-INCH BY 18-INCH PVC SUMP/GRATE DOMED WITH 8-INCH SIDE PORT. COMPLY WITH ASME/ANSI A112.19.8-2007 UNBLOCKABLE REQUIREMENTS. OPEN AREA PROVIDED 183.06 SQ. IN., 576 GPM.
2	4	HYDROSTATIC VALVE	HAYWARD	SP1056	HYDROSTATIC RELIEF VALVE
3	4	COL.TUBE	HAYWARD	SP1055	COMMERCIAL COLLECTOR TUBE
4	466'-0"	GUTTER	WHITTEN PRODUCTS	PRS-DL	STAINLESS STEEL PERIMETER OVERFLOW GUTTER SYSTEM WITH 4-INCH RETURN LOOP

FILTER AREA MISCELLANEOUS EQUIPMENT

MARK	QTY	ITEM	MANUFACTURER	CAT NO.	DESCRIPTION
5	4	PRESSURE GAUGE	WEKSLER	UA25B4L	2-1/2-INCH DIA. FACE, 0-60 PSI
6	2	COMPOUND GAUGE	WEKSLER	UA25K4L	2-1/2-INCH DIA. FACE, 0-30 INCHES HG, 0-60 PSI
7	1	EYE WASH STATION	HAWS	7500	16-GALLON CAPACITY PORTABLE EYE WASH STATION

FILTRATION EQUIPMENT

MARK	QTY	ITEM	MANUFACTURER	CAT NO.	DESCRIPTION
8	1	COLLECTION TANK	PHOENIX PRECAST PRODUCTS	PRECAST	10'-0" X 25'-0" X 9'-0" COLLECTION TANK WITH 3'-0" BY 3'-0" TANK HATCH OPENING , AND ALL PIPE SLEEVES PER PIPING PLANS.
9	1	TANK HATCH	BILCO	TER-4	HATCH, SINGLE LEAF, 150 POUND PER SQUARE FOOT LOAD RATING, ALUMINUM FRAME, INFILL TO MATCH SURROUNDINGS AND T-316 STAINLESS STEEL HARDWARE.
10	1	ANTI-VORTEX PLATE	NEPTUNE BENSON	AVPLATE08PVCKIT	PVC PLATE WITH ALL STAINLESS STEEL HARDWARE FOR 8-INCH SUCTION PIPE
11	1	WATER LEVEL SENSOR	GEMS SENSOR	3F3E/ 16ML1A4/ PROBE PER FOOT	WATER LEVEL CONTROL AND 3 PROBE WITH FITTINGS AND PROBES AS REQUIRED FOR FILL CONTROLL AND SHALL INCLUDE REQUIRED SOLENOID VALVE.
12	1	FILTER PUMP	MARLOW	530SC 4-9SC	15 HP PUMP, 720 GPM AT 61 TDH, 3 PHASE, 460 VOLT
13	1	PUMP STRAINER	NEPTUNE BENSON	150NBFG85ER1	8-INCH REDUCING TO 5-INCH FIBERGLASS STRAINER WITH STAINLESS STEEL BASKET, WITH ONE SPARE BASKET MODEL NBSK08EP
14	1	VFD	PENTAIR	ACUDRIVE XS	15 HP VFD, 460V, 3 PHASE, WITH DISCONNECT & BYPASS VARIABLE FREQUENCY DRIVE, NEMA 12 ENCLOSURE.
15	1	FLOW METER	GF SIGNET	2536	DIGITAL PADDLEWHEEL, DISPLAY ON CHEMICAL CONTROLLER AND RELAY TO VFD
16	1	MODULATION VALVE	NEPTUNE BENSON	DVINLINEPVC10D	10-IN MODULATION VALVE SCH 80 PVC WITH 304 STAINLESS STEEL 7-INCH DIAMETER FLOATS, SOLID CORE 1-IN STAINLESS STEEL ROD CLOSER = 80%.
17	1	FILTER	NEPTUNE BENSON	4884SHFFGS-6R	HI-RATE SAND FILTER, DUAL FILTERS STACKED WITH MODEL FP2SHFS3WP. 6-INCH FACE PIPING INCLUDING 5-INCH BACKWASH CONNECTION, MANIFOLD /BLOCK, ELECTRIC SOLENOID VALVES, AND BACKWASH CONTROLLER

CHEMICAL EQUIPMENT

MARK	QTY	ITEM	MANUFACTURER	CAT NO.	DESCRIPTION
18	1	CHEMICAL CONTROLLER	BEC SYSTEMS	BECSYS5	CHEMICAL CONTROLLER WITH FLOW CELL ASSEMBLY WITH ORP AND PH SENSOR VFD CONTROL, CONNECT TO VFD, WATERLEVEL AND BACKWASH CONTROL PANEL.
19	1	TABLET CHLORINE FEEDER	PULSAR	PULSAR140	CHLORINE TABLET FEEDER COMPLETE WITH PULSAR BOOSTER PUMP AND VENTURI. BOOSTER PUMP SHALL BE 1# 230V
20	1	CO_2	BEC SYSTEMS	BECSYS CO2	SINGLE TANK REGULATOR AND AUTOMATIC DUAL TANK SWITCH OVER CARBON DIOXIDE FEEDER 20-200 SCFH, 115V WITH HEATER
21	1	UV	ETS	ECF-220-8	ULTRA VIOLET DISINFECTION WITH CONE STRAINER, 3 PHASE 480V, CONTROL PANEL SHALL BE NEMA 12 MINIMUM. PROVIDE (1) EXTRA SET OF BULBS.

DECK SAFETY & MAINTENANCE EQUIPMENT

MARK	QTY	ITEM	MANUFACTURER	CAT NO.	DESCRIPTION
22	5	LIFE RING	BEL-AQUA	34124 /LL60	24-INCH DIAMETER PLASTIC RING WITH 1/4-INCH BY 60 FOOT LONG SAFETY LINE. SHALL BE ATTACHED TO LIFEGUARD STAND
23	5	LIFE HOOK	BEL-AQUA	R153 / 30316	SHEPARD TYPE LIFE HOOK, END ANCHORED TO A 16 FOOT ALUMINUM HANDLE. SHALL BE ATTACHED TO LIFEGUARD STAND
24	2	SAFTY LINE	PENTAIR	LENGTH PER PLAN	POLYTHENE ROPE, FLOAT AND ANCHORS.
25	1	VACUUM CLEANER HEAD	PENTAIR PROVAC	R201276 - MODEL 214	14-INCH WIDE VACUUM HEAD WITH FLOOR WHEEL BASE, 16 FT HANDLE, AND 1-1/2-INCH BY 40 FOOT FLEX HOSE
26	1	TEST KIT	TAYLOR	K2000-5	DUPLEX CAPABLE OF MEETING ALL CHEMICAL TESTS SPECIFIED BY THE CONNECTICUT PUBLIC HEALTH CODE, 19-13-B33b
27	1	FIRST AID KIT	BEL-AQUA	PK5301	FIRST AID KIT WITH 24 UNIT / 25 PEOPLE BY THE CONNECTICUT PUBLIC HEALTH CODE, 19-13-B33b
28	1	HANDLE	BEL-AQUA	303T16	16FT - 12FT TELESCOPIC HANDLE, PROVIDE STAINLESS STEEL MOUNTING BRACKETS.
29	1	LEAF SKIMMER	BEL-AQUA	R122	LEAF SKIMMER -PRO WITH POLE
30	1	BRUSH	BEL-AQUA	ELM0102	24-INCH WIDE STRAIGHT END WALL BRUSHES WITH NYLON BRISTLES AND DIE-CAST ALUMINUM HANDLE BRACKET.
31	2	VACUUM HOSE	-	1.5 IN. BY 50 FT.	HEAVY-DUTY VACUUM HOSE
32	1	PORTABLE VACUUM CLEANER SYSTEM	SPECTRUM AQUATICS	10670	PORTABLE SKID MOUNTED UNIT WITH BF155 CARTRIDGE FILTER WITH STA-RITE DYNA-MAX MODEL 433-11, FULL RATE 1.0 HP, 230V/115V, 5 AMP/10 AMP, 60 HZ, SELF PRIMING PUMP WITH 100 FOOT CORD AND PUMP. REQUIRES PLUG TO BE PLUGGED INTO A GFI OUTLET.
33	1	PORTABLE ADA AQUATIC LIFT	SR SMITH	ML300	AQUATIC POOL LIFT INCLUDING DECK ANCHOR (ADA COMPLIANT). CHARGER TO BE WALL MOUNTED IN FILTER ROOM.
34	2	911 PHONE	RATH POOL PHONES	624MPOOL	HANDSET PHONE WITH KEYPAD IN WATER TIGHT ENCLOSURE, LIFT HANDSET AND DIAL APPROPRIATE PHONE NUMBER, COIL CORD.
35	3	LIFE GUARD PLATFORM	SRSMITH	US48700	316L STAINLESS STEEL, LIFE GUARD CHAR WITH UMBRELLA TUBE AND LIFE RING HOLDER
35A	1	POOL COVER	LOOP LOC	ULTRA-LOC II	POOL WINTER COVER AND ANCHORING SYSTEM

LADDERS AND HANDRAILS

MARK	QTY	ITEM	MANUFACTURER	CAT NO.	DESCRIPTION
36	2	HAND RAIL	SR SMITH	SEE POOL SECTION	3 BEND 1.9-INCH O.D. BY 0.065-INCH WALL POLISHED STAINLESS STEEL
37	8	GRAB RAIL	SR SMITH	10179	FIGURE 4 STAINLESS RAILS 1.9-INCH O.D. BY 0.065-INCH WALL POLISHED STAINLESS STEEL.
38	11	STEP INSERT	KDI PARAGON	320104	STAINLESS STEEL INSERT WITH SLOPED TREAD TO POOL, POLISHED, CORROSION-RESISTANT, AND NON-SKID SAND BLASTED BOTTOM OF TREAD. (3) 3 TREAD AND (1) 2 TREAD INSTALLATIONS.
39	20	WEDGE ANCHORS	SR SMITH	IAA-100	4-INCH BRONZE INSTITUTIONAL ANCHOR ASSEMBLY FOR 1.90 INCH O.D. COMMERCIAL RAILS, SOCKET WITH GROUNDING LUG, EACH SOCKET SHALL BE PROPERLY GROUNDED IN ACCORDANCE WITH NATIONAL ELECTRICAL CODE STANDARDS.
40	20	ESCUTCHEON PLATE	SR SMITH	EP-100F	STAINLESS STEEL ROUND COVER PLATE FOR 1.90-INCH O.D. RAILS.

RACING EQUIPMENT

MARK	QTY	ITEM	MANUFACTURER	CAT NO.	DESCRIPTION
41	6	RACING LANE LINES	PARAGON	76102-1	BLUE AND WHITE CONTINUOUS 4-INCH DIAMETER 25 YARD COMPETITOR ANTI-TURBULENT RACING LANES INCLUDING STORAGE REELS

MAIN POOL DATA CHART

DESCRIPTION	AMOUNT/RATE
TOTAL POOL SURFACE WATER AREA - SQUARE FEET (SF)	6,322 S.F.
TOTAL POOL PERIMETER (FEET)	466'-0"
POOL DEPTH (FEET)	0'-0" TO 5'-6"
TOTAL POOL VOLUME - (GALS)	172,741 GALS
POOL TURNOVER (T.O.R.)	4 HRS. AT 720 GPM
FLOW RATE - POOL	720 GPM
BATHING LOAD	252 PERSONS
FILTER AREA	63.4 SQFT
FILTER APPLICATION RATE	11.4 GPM PER SQFT

MAIN POOL CALCULATIONS:
MAIN DRAIN VELOCITY:
FILTER:
(2) 18-IN SQUARE MAIN DRAIN -
TOTAL OPEN AREA:
2 X 183.06 SQ. IN.(PER MANF.) / 144 =
2.54 SQ. FT.
TOTAL FLOW:
720 GPM/449 (GPM/(CU. FT./S) =
1.60 CU. FT./S
TOTAL VELOCITY:
1.60 (CU. FT./S)/2.54 SQ. FT. = **0.63 F.P.S.**

SURGE TANK CALCULATIONS:
POOL AREA: 6,322 SQ. FT.
SURGE REQUIRED:
6,322 SQ.FT. X 1 SQ.FT. PER GAL. = **6,322 GAL.**
POOL GUTTER:
GUTTER AREA: 4.75 SQ.FT.
GUTTER SURGE VOLUME: 4.75 SQ.FT. X 466 FT X 7.481 CU.FT. PER GAL = **2,215 GAL.**
POOL TANK SURGE:
TANK SURGE: (L)23.6 FT. X (W)8.66 FT. X HEIGHT OF BOTTOM OF FLOAT TO GUTTER CONVERTER INVERT (SURGE) 4.35 FT X 7.48 CU.FT. PER GAL = **6,681 GAL.**
TOTAL SURGE CAPACITY: 6,681GAL + 2,215 GAL = **8,896 GAL.**

ACTIVITY POOL PIPING SCHEMATIC

SCALE: NOT TO SCALE

Weston&Sampson®
273 Dividend Road, Rocky Hill, CT 06067
(860) 513-1473 (800) SAMPSON
www.westonandsampson.com

No.	Date	Dr.By	Ck.By	App.By	Description

APPROVED
12-15-15
DATE
REGISTERED PROFESSIONAL ENGINEER

TOWN OF GREENWICH – DEPARTMENT OF PUBLIC WORKS
RITCH AVENUE WEST, GREENWICH, CONNECTICUT
BYRAM PARK POOL REPLACEMENT

ACTIVITY POOL PIPING SCHEMATIC

CADD NO.	SCALE:	CONTRACT:	JOB NO.	DR.BY	DSN.BY	CHK.BY	APP.BY
GREENWICH	AS NOTED	–	2130336	S.A.A.	M.P.M.	–	–

FILE NO. SP2.4

SHEET – OF –

12/16/2015 12:52:22PM G:\CADD-Current_Set\Sheets\SP-2.4 ACTIVITY POOL PIPING SCHEMATIC AND EQUIP LIST.dwg

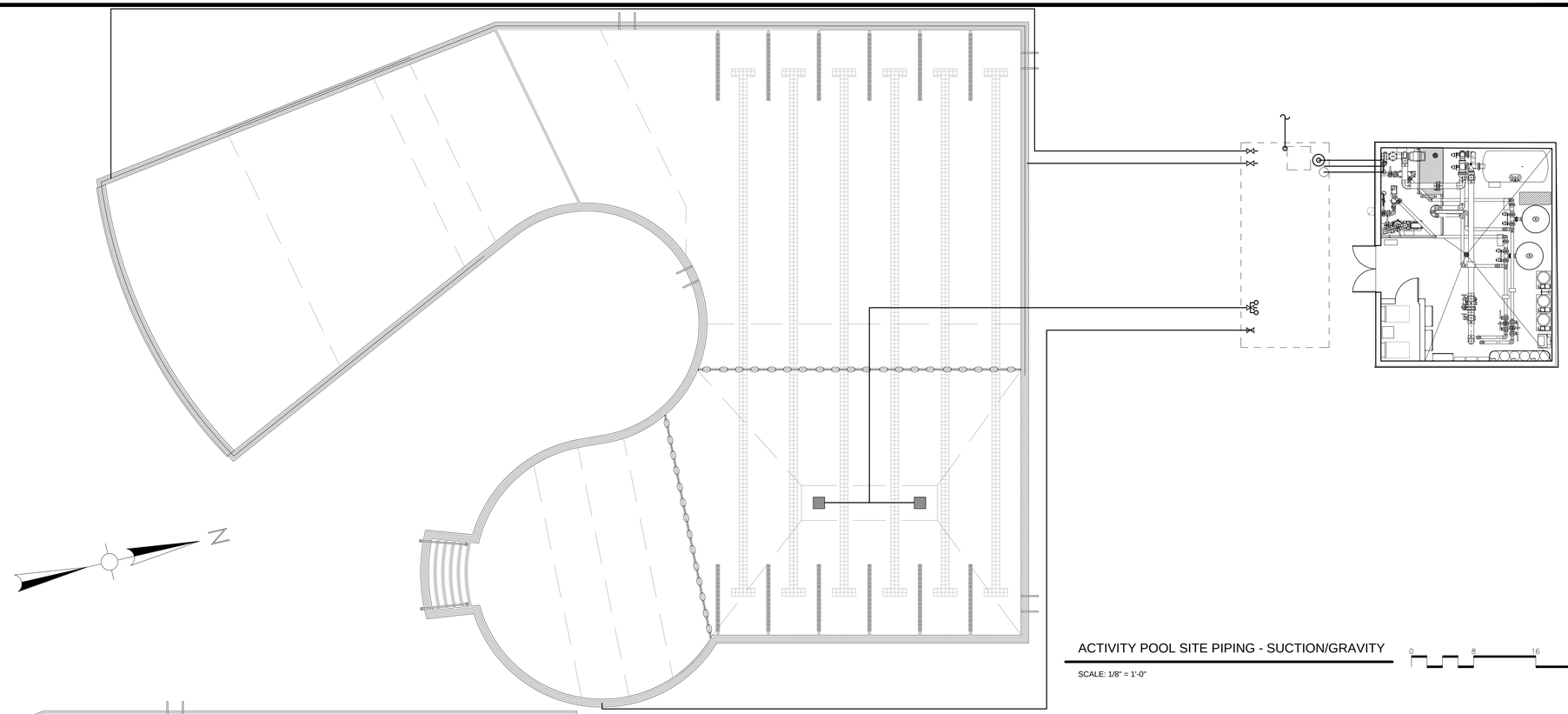

ACTIVITY POOL SITE PIPING - SUCTION/GRAVITY

SCALE: 1/8" = 1'-0"

0 8 16 24

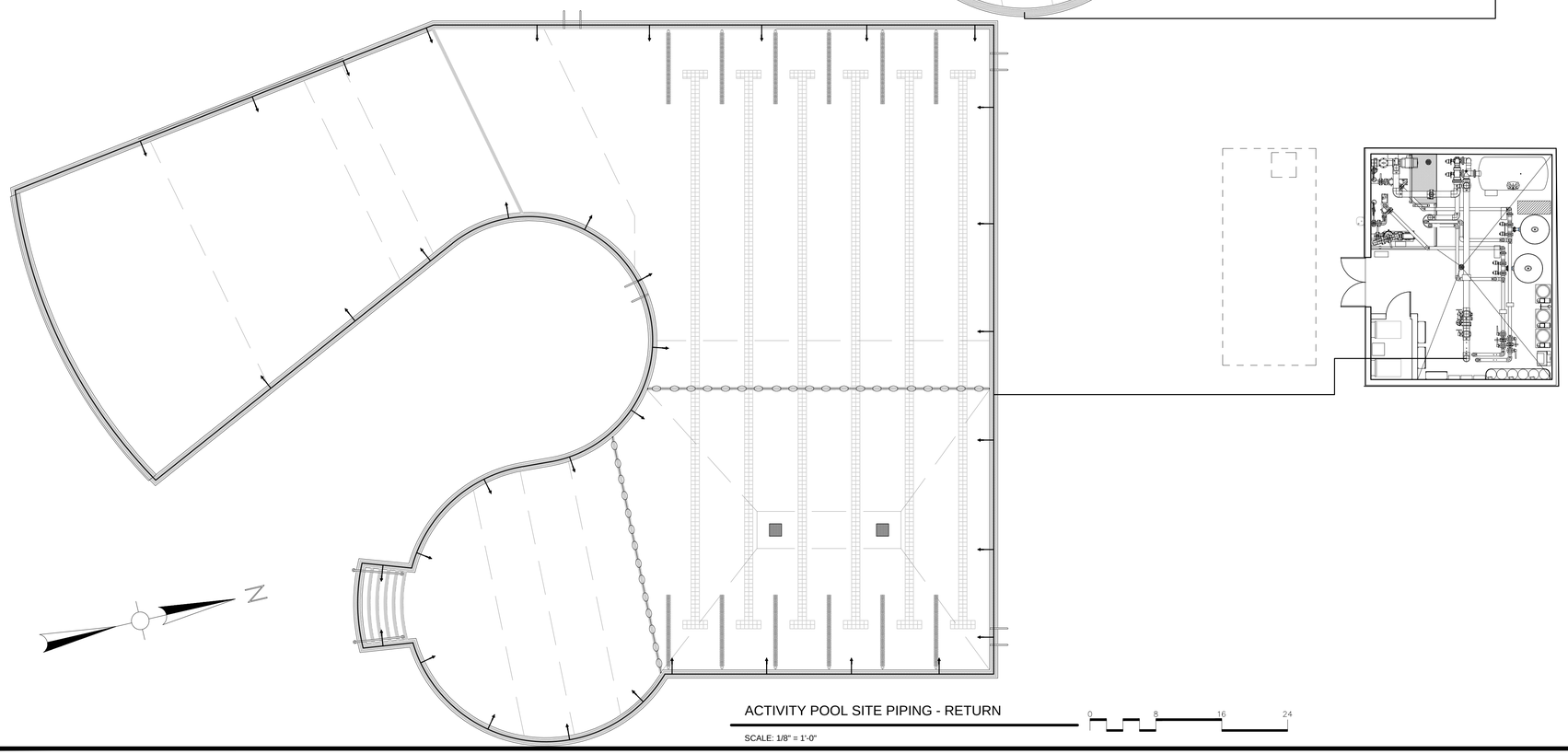

ACTIVITY POOL SITE PIPING - RETURN

SCALE: 1/8" = 1'-0"

0 8 16 24

Weston&Sampson®
273 Dividend Road, Rocky Hill, CT 06067
(860) 513-1473 (800) SAMPSON
www.westonandsampson.com

No.	Date	Dr.By	Ck.By	App.By	Description
				A P P R O V E D	

12-15-15
DATE

REGISTERED PROFESSIONAL ENGINEER

STATE OF CONNECTICUT
CHRISTOPHER M. MESTER
No. 17475
LICENSED
PROFESSIONAL ENGINEER

TOWN OF GREENWICH – DEPARTMENT OF PUBLIC WORKS
RITCH AVENUE WEST, GREENWICH, CONNECTICUT

BYRAM PARK POOL REPLACEMENT

ACTIVITY POOL SITE PIPING

CADD NO. GREENWICH | SCALE: AS NOTED | CONTRACT: – | JOB NO. 2130336 | DR.BY S.A.A. | DSN.BY M.P.M. | CHK.BY – | APP.BY –

SP2.5

FILE NO.

SHEET – OF –

12/16/2015 12:56:33PM G:\CADI0-Current_Set\Sheets\SP-2.5 ACTIVITY POOL SITE PIPING.dwg

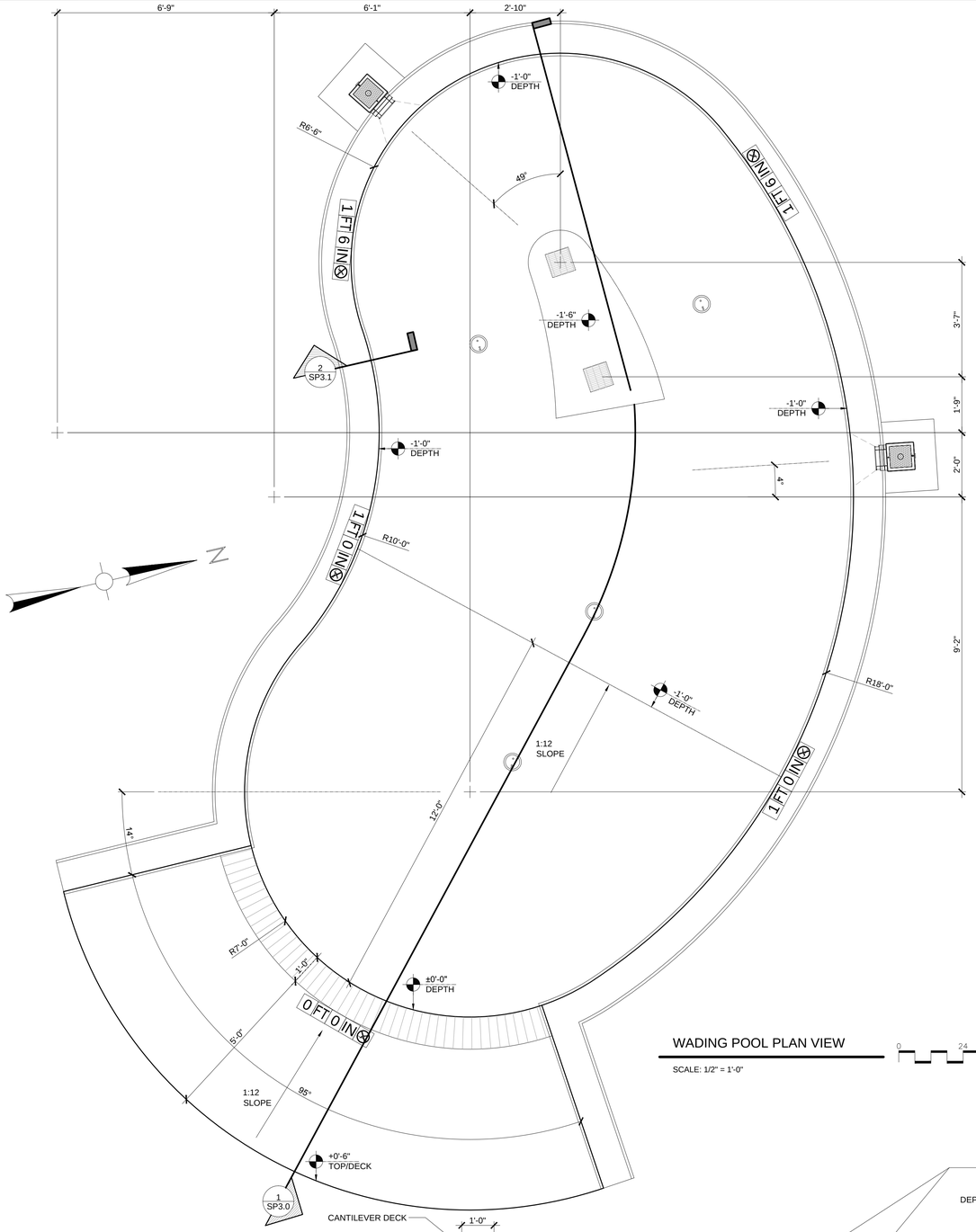

WADING POOL PLAN VIEW

SCALE: 1/2" = 1'-0"

0 24 48 60

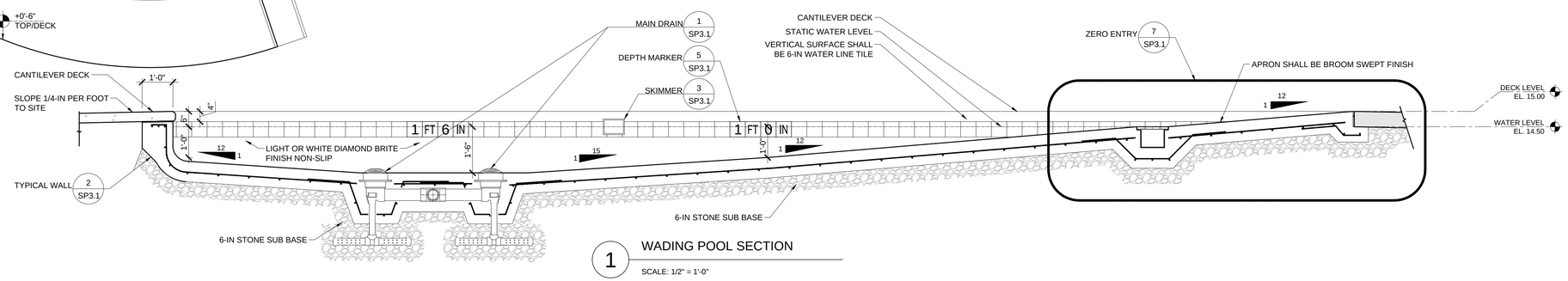

1 WADING POOL SECTION

SCALE: 1/2" = 1'-0"

Weston&Sampson®
273 Dividend Road, Rocky Hill, CT 06067
(860) 513-1473 (800) SAMPSON
www.westonandsampson.com

No.	Date	Dr.By	Ck.By	App.By	Description
				A P P R O V E D	

12-15-15
DATE

REGISTERED PROFESSIONAL ENGINEER

STATE OF CONNECTICUT · CHRISTOPHER M. MESTER · No. 17475 · LICENSED PROFESSIONAL ENGINEER

TOWN OF GREENWICH – DEPARTMENT OF PUBLIC WORKS
RITCH AVENUE WEST, GREENWICH, CONNECTICUT

BYRAM PARK POOL REPLACEMENT

WADING POOL PLAN AND SECTION

CADD NO.	SCALE:	CONTRACT:	JOB NO.	DR.BY	DSN.BY	CHK.BY	APP.BY
GREENWICH	AS NOTED	–	2130336	S.A.A.	M.P.M.	–	–

FILE NO. SP3.0

SHEET – OF –

12/16/2015 12:57:49PM G:\CADD-Current_Set\Sheets\SP-3.0 WADING POOL PLAN.dwg

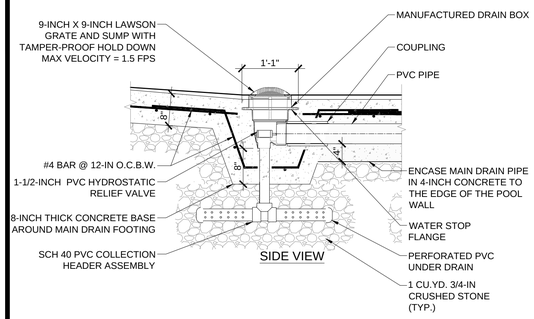

1 MAIN DRAIN

SCALE: 3/4" = 1'-0"

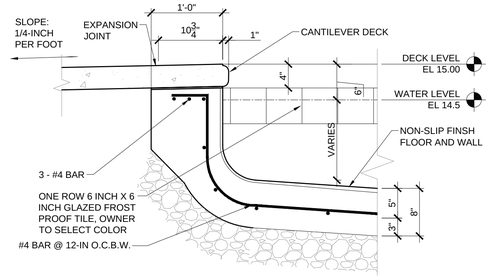

2 TYPICAL WALL

SCALE: 1" = 1'-0"

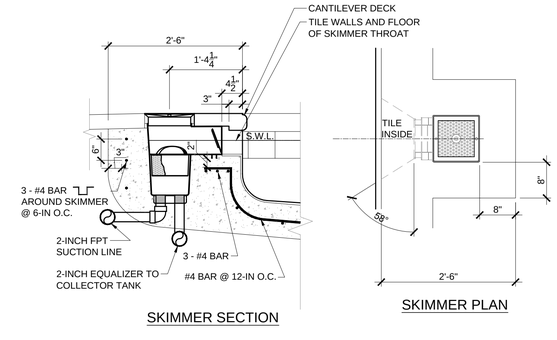

3 SKIMMER

SCALE: 3/4" = 1'-0"

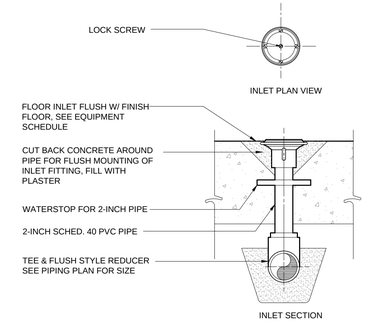

NOTE:
CAP PIPE AND HYDROSTATICALLY TEST BEFORE CONCEALMENT.

4 FLOOR INLET

SCALE: 1-1/2" = 1'-0"

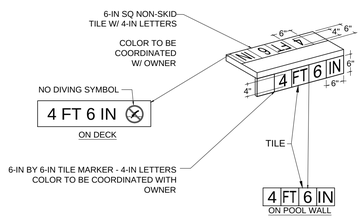

NOTE: ALL TEXT SHALL BE DARK IN COLOR ON WHITE OR LIGHT CONTRASTING BACKGROUND

NOTE:
1. ALL DEPTH MARKERS SHALL SAY: __FT __IN
2. NO DIVING SHALL BE NO DIVING SYMBOL OR SAY: NO DIVING
3. DECK TILE REQUIRED TO BE NON-SLIP

5 DEPTH MARKER

SCALE: 1/2" = 1'-0"

POOL RULES

1. NO FOOD, DRINK, GLASS OR ANIMALS IN POOL OR ON POOL DECK
2. SHOWER BEFORE ENTERING POOL
3. WADING POOL BATHING LOAD: _____ PERSONS MAXIMUM
4. SPRAY DECK BATHING LOAD: _____ PERSONS MAXIMUM
5. POOL HOURS: ___ AM TO ___ PM
6. NOT INTENDED FOR NIGHTTIME SWIMMING
7. ALL PERSONS SHALL BATHE WITH WARM WATER AND SOAP BEFORE ENTERING THE POOL.
8. ANY PERSONS KNOWN OR SUSPECTED OF HAVING A COMMUNICABLE DISEASE SHALL NOT USE THE POOL.
9. SPITTING OR BLOWING THE NOSE IN THE POOL IS PROHIBITED.
10. RUNNING, BOISTEROUS OR ROUGH PLAY (EXCEPT SUPERVISED WATER SPORTS) IS PROHIBITED.

NO DIVING

THESE LETTERS SHALL CONTRAST THE BACK GROUND COLOR AND BE NO LESS THAN 1 INCH HIGH

THIS SIGN IS MINIMUM REQUIRED TO MEET CODE. THIS OR EQUIVALENT SHALL BE INSTALLED PRIOR TO HEALTH INSPECTION. SIGN MAY BE ADJUSTED FOR AESTHETICS AT ANY TIME BUT SHALL HAVE MINIMUM SHOWN. THIS SIGN SHALL BE MADE OF ACRYLIC.

POOL RULES SIGN PER 19-13-B33b. PUBLIC POOLS

1. POOL RULES MUST BE DISPLAYED ON A SIGN AT OR NEAR THE POOL SIDE AND MUST BE LEGIBLE FROM THE POOL DECK.
2. RULES SHALL BE STATED AS CODE REQUIRES AS A MINIMUM.
3. LETTERING FOR THE POOL RULES SIGN IS A T LEAST 1-INCH HIGH AND "NO DIVING" IS AT LEAST 4-INCH HIGH.
4. LIFEGUARDS. WHEN NO LIFEGUARD SERVICE IS IN EFFECT A WARNING SIGN SHALL BE PLACED IN PLAIN VIEW AND SHALL STATE "WARNING - NO LIFEGUARD ON DUTY" WITH LEGIBLE LETTERS, AT LEAST FOUR INCHES HIGH. THIS WARNING SHALL BE EASILY VISIBLE FROM ALL ENTRY POINTS INTO THE POOL AREA.

6 WADING POOL SIGN

SCALE: NOT TO SCALE

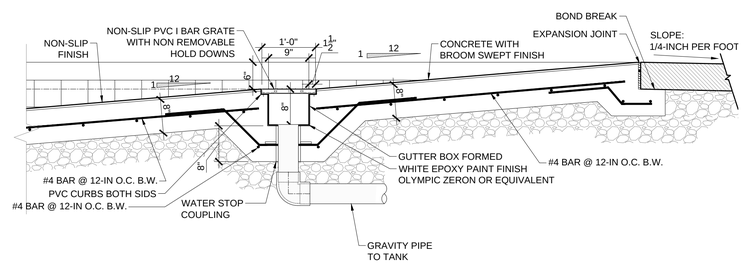

7 ZERO ENTRY

SCALE: 3/4" = 1'-0"

8 NOT USED

SCALE: NOT TO SCALE

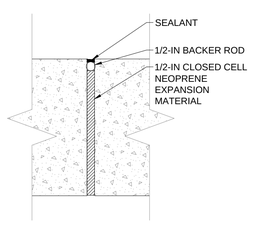

9 EXPANSION JOINT

SCALE: 3" = 1'-0"

Weston&Sampson®
273 Dividend Road, Rocky Hill, CT 06067
(860) 513-1473 (800) SAMPSON
www.westonandsampson.com

No.	Date	Dr.By	Ck.By	App.By	Description
					APPROVED

12-15-15
DATE

REGISTERED PROFESSIONAL ENGINEER

TOWN OF GREENWICH – DEPARTMENT OF PUBLIC WORKS
RITCH AVENUE WEST, GREENWICH, CONNECTICUT

BYRAM PARK POOL REPLACEMENT

WADING POOL DETAILS

CADD NO.	SCALE:	CONTRACT:	JOB NO.	DR.BY	DSN.BY	CHK.BY	APP.BY
GREENWICH	AS NOTED	–	2130336	S.A.A.	M.P.M.	–	–

SP3.1

FILE NO.

SHEET – OF –

12/16/2015 12:59:01PM G:\CADD-Current_Set\Sheets\SP-3.1 WADING POOL DETAIL.dwg

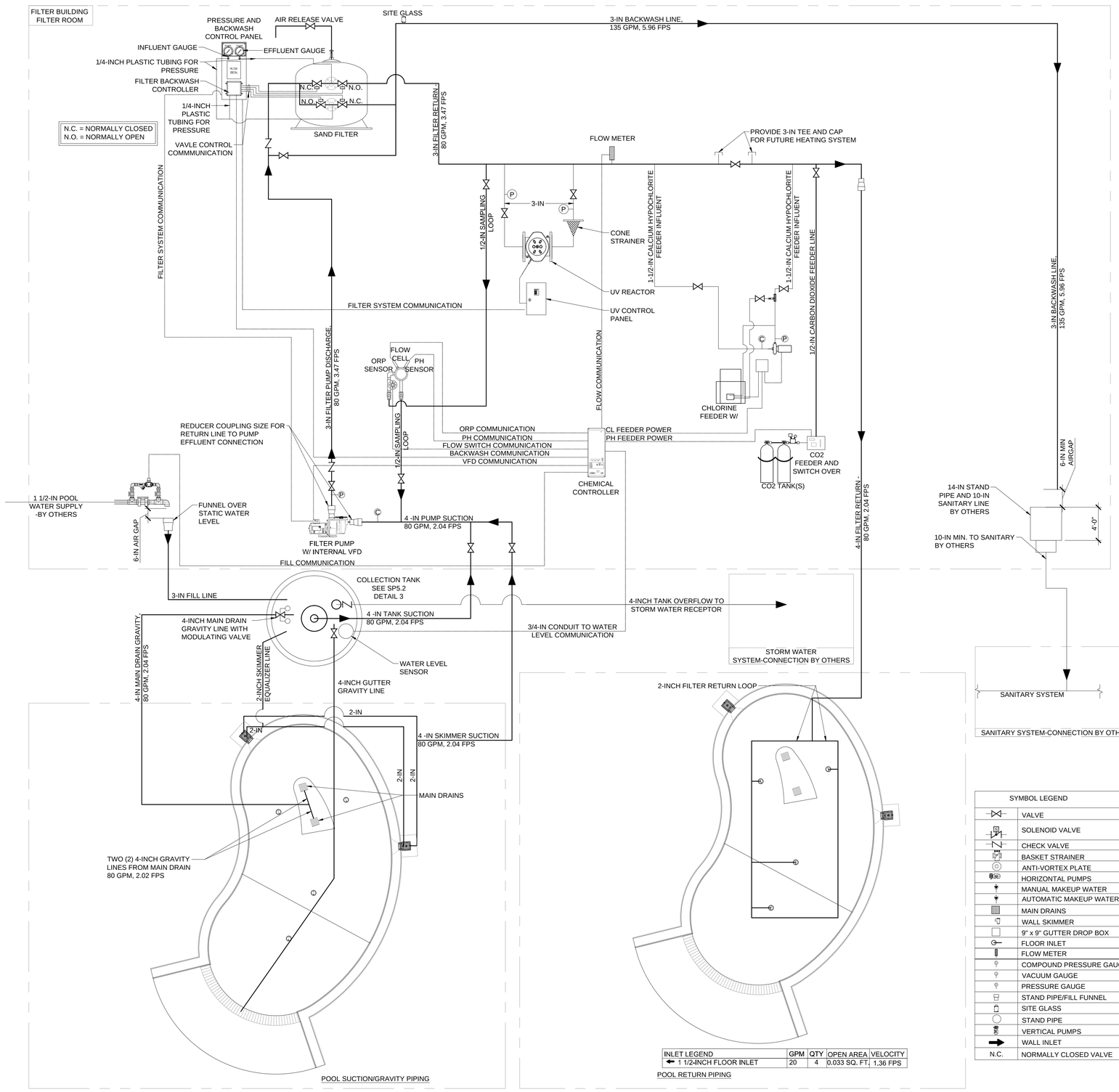

INLET LEGEND	GPM	QTY	OPEN AREA	VELOCITY
1 1/2-INCH FLOOR INLET	20	4	0.033 SQ. FT.	1.36 FPS

SYMBOL LEGEND	
	VALVE
	SOLENOID VALVE
	CHECK VALVE
	BASKET STRAINER
	ANTI-VORTEX PLATE
	HORIZONTAL PUMPS
	MANUAL MAKEUP WATER
	AUTOMATIC MAKEUP WATER
	MAIN DRAINS
	WALL SKIMMER
	9" x 9" GUTTER DROP BOX
	FLOOR INLET
	FLOW METER
	COMPOUND PRESSURE GAUGE
	VACUUM GAUGE
	PRESSURE GAUGE
	STAND PIPE/FILL FUNNEL
	SITE GLASS
	STAND PIPE
	VERTICAL PUMPS
	WALL INLET
N.C.	NORMALLY CLOSED VALVE

WADING POOL PIPING SCHEMATIC

SCALE: NOT TO SCALE

WADING POOL EQUIPMENT SCHEDULE

PERIMETER OVERFLOW AND RECIRCULATION SYSTEM

MARK	QTY	ITEM	MANUFACTURER	CAT NO.	DESCRIPTION
1	2	MAIN DRAIN GRATE & SUMP	LAWSON AQUATICS	MLD-FG-0909-WT	9-INCH BY 9-INCH PVC SUMP/GRATE DOMED WITH 4-INCH SIDE PORT. COMPLY WITH ASME/ANSI A112.19.8-2007 UNBLOCKABLE REQUIREMENTS. OPEN AREA PROVIDED 42.12 SQ. IN., 40 GPM.
2	4	H. VALVE	HAYWARD	SP1056	HYDROSTATIC RELIEF VALVE
3	4	COL.TUBE	HAYWARD	SP1055	COMMERCIAL COLLECTOR TUBE
4	2	SKIMMER	HAYWARD	SP1082	NSF APPROVED SKIMMER, EQUALIZER, 2-INCH SLIP, FLAP WEIR
5	4	FLOOR RETURN FITTINGS	SR SMITH	A41014	CHROME PLATED CAST BRASS FLOW ADJUSTABLE, FLUSH MOUNTED 1-1/2-IN. FLOOR INLET

FILTER AREA MISCELLANEOUS EQUIPMENT

MARK	QTY	ITEM	MANUFACTURER	CAT NO.	DESCRIPTION
6	3	PRESSURE GAUGE	WEKSLER	UA25B4L	2-1/2-INCH DIA. FACE, 0-60 PSI
7	1	COMPOUND GAUGE	WEKSLER	UA25K4L	2-1/2-INCH DIA. FACE, 0-30 INCHES HG, 0-60 PSI
8	1	EYE WASH STATION	SHARED WITH ACTIVITY POOL		

FILTRATION EQUIPMENT

MARK	QTY	ITEM	MANUFACTURER	CAT NO.	DESCRIPTION
9	1	COLLECTION TANK	PHOENIX PRECAST PRODUCTS	PRECAST	4'-0" DIAMETER X 5'-6" HEIGHT COLLECTION TANK WITH TANK HATCH OPENING, AND ALL PIPE SLEEVES PER PIPING PLANS.
9A	1	TANK HATCH	BILCO	TER-4	SINGLE LEAF HATCH WITH 150 POUNDS PER SQUARE FOOT LOAD RATING, ALUMINUM FRAME, INFILL TO MATCH SURROUNDING DECK, T-316 STAINLESS HARDWARE
10	1	ANTI-VORTEX PLATE	NEPTUNE BENSON	AVPLATE04PVCKIT	PVC PLATE WITH ALL STAINLESS STEEL HARDWARE FOR 4-INCH PIPE
11	1	WATER LEVEL SENSOR	GEMS SENSOR	3F3E/ 16ML14A/ PROBE PER FOOT	WATER LEVEL CONTROL AND 3 PROBE WITH FITTINS AND PROBES AS REQUIRED FOR FILL CONTROLL AND SHALL INCLUDE REQUIRED SOLENOID VALVE.
12	1	FILTER PUMP	PENTAIR	011012	3 HP VARIABLE FLOW WITH INTEGRAL STRAINER, 80 GPM AT 60 TDH, 230 VOLT, 1 PHASE AND VFD ATTACHED
13	1	FLOW METER	GF SIGNET	2536	DIGITAL PADDLEWHEEL WITH DISPLAY AND RELAY TO VFD AND CHEMICAL COMTROLLER
14	1	MODULATION VALVE	NEPTUNE BENSON	DVINLINEPVC04D	304 STAINLESS STEEL 8-INCH DIAMETER PLASTIC FLOATS, SOLID CORE 5/8-INCH STAINLESS STEEL ROD MAX CLOSER = 80%
15	1	FILTER	NEPTUNE BENSON	42CCFG-3WM3-3	HI-RATE SAND FILTER COMPLETE AUTOMATIC SYSTEM, SCHEDULE 80 PVC PIPING WITH MFP3 BACKWASH CONTROLLER.

CHEMICAL EQUIPMENT

MARK	QTY	ITEM	MANUFACTURER	CAT NO.	DESCRIPTION
16	1	CHEMICAL CONTROLLER	BEC SYSTEMS	BECSYS5	CHEMICAL CONTROLLER WITH FLOW CELL ASSEMBLY WITH ORP AND PH SENSOR VFD CONTROL, CONNECT TO VFD, WATERLEVEL AND BACKWASH CONTROL PANEL.
17	1	TABLET CHLORINE FEEDER	PULSAR	PULSAR45	CHLORINE TABLET FEEDER COMPLETE WITH PULSAR BOOSTER PUMP AND VENTURI. BOOSTER PUMP SHALL BE 1# 208V.
18	1	CO_2	BEC SYSTEMS	BECSYS CO2	SINGLE TANK REGULATOR AND AUTOMATIC DUAL TANK SWITCH OVER CARBON DIOXIDE FEEDER 20-200 SCFH, 115V WITH HEATER
19	1	UV	ETS	ECP-113-5SPV	ULTRA VIOLET DISINFECTION WITH CONE STRAINER, 1 PHASE 230V, CONTROL PANEL SHALL BE NEMA 12 MINIMUM. PROVIDE (1) EXTRA SET OF BULBS.

DECK SAFETY & MAINTENANCE EQUIPMENT

MARK	QTY	ITEM	MANUFACTURER	CAT NO.	DESCRIPTION
20	1	LIFE RING	BEL-AQUA	34124 /LL60	24-INCH DIAMETER PLASTIC RING WITH 1/4-INCH BY 60 FOOT LONG SAFETY LINE. SHALL BE ATTACHED TO LIFEGUARD STAND
21	1	LIFE HOOK	BEL-AQUA	R153 / 30316	SHEPARD TYPE LIFE HOOK, END ANCHORED TO A 16 FOOT ALUMINUM HANDLE. SHALL BE ATTACHED TO LIFEGUARD STAND
22	1	LIFE RING HOLDER	LINCOLN	44-100	STAINLESS STEEL LIFE RING HOLDER
23	1	VACUUM CLEANER HEAD	SHARED WITH ACTIVITY POOL		
24	1	TEST KIT	SHARED WITH ACTIVITY POOL		
25	1	FIRST AID KIT	SHARED WITH ACTIVITY POOL		
26	1	HANDLE	SHARED WITH ACTIVITY POOL		
27	1	LEAF SKIMMER	SHARED WITH ACTIVITY POOL		
28	1	BRUSH	BEL-AQUA	ELM0102	24-INCH WIDE STRAIGHT END WALL BRUSHES WITH NYLON BRISTLES AND DIE-CAST ALUMINUM HANDLE BRACKET.
29	1	VACUUM HOSE	SHARED WITH ACTIVITY POOL		
30	1	PORTABLE VACUUM CLEANER SYSTEM	SHARED WITH ACTIVITY POOL		
30	1	911 PHONE	RATH POOL PHONES	624MPOOL	HANDSET PHONE WITH KEYPAD IN WATER TIGHT ENCLOSURE, LIFT HANDSET AND DIAL APPROPRIATE PHONE NUMBER, COIL CORD.

POOL DATA CHART

DESCRIPTION	AMOUNT/RATE
TOTAL POOL SURFACE WATER AREA - SQUARE FEET (SF)	331 S.F.
TOTAL POOL PERIMETER (FEET)	75'-5"
POOL DEPTH (FEET)	0'-0" TO 1'-6"
TOTAL POOL VOLUME - (GALS)	1,857 GALS
POOL TURNOVER (T.O.R.)	(23 MIN.) 0.39 HRS. AT 80 GPM
FLOW RATE - POOL	80 GPM
BATHING LOAD	33 PERSONS
FILTER AREA	9.0 SQFT
FILTER APPLICATION RATE	8.9 GPM PER SQFT

WADING POOL CALCULATIONS:
MAIN DRAIN VELOCITY:

FILTER/BOOSTER:
(2) 9-IN SQUARE MAIN DRAIN -
TOTAL OPEN AREA:
2 X 42.12 (PER MANF.) / 144 = 0.59 SQ. FT.
TOTAL FLOW:
80 GPM / 449 (GPM/(CU. FT./S) = 0.18 CU. FT./S
TOTAL VELOCITY:
0.18 (CU. FT./S) / 0.59 SQ. FT. = 0.30 F.P.S.

Weston&Sampson®
273 Dividend Road, Rocky Hill, CT 06067
(860) 513-1473 (800) SAMPSON
www.westonandsampson.com

No.	Date	Dr.By	Ck.By	App.By	Description
		A	P	P	R O V E D

12-15-15
DATE
REGISTERED PROFESSIONAL ENGINEER

TOWN OF GREENWICH – DEPARTMENT OF PUBLIC WORKS
RITCH AVENUE WEST, GREENWICH, CONNECTICUT
BYRAM PARK POOL REPLACEMENT

WADING POOL PIPING SCHEMTIC

CADD NO.	SCALE:	CONTRACT:	JOB NO.	DR.BY	DSN.BY	CHK.BY	APP.BY
GREENWICH	AS NOTED	–	2130336	S.A.A.	M.P.M.	–	–

FILE NO. SP3.2

SHEET – OF –

12/16/2015 01:01:18PM G:\CAD\0-Current_Set\Sheets\SP-3.2 WADING POOL PIPING SCHEMATIC.dwg

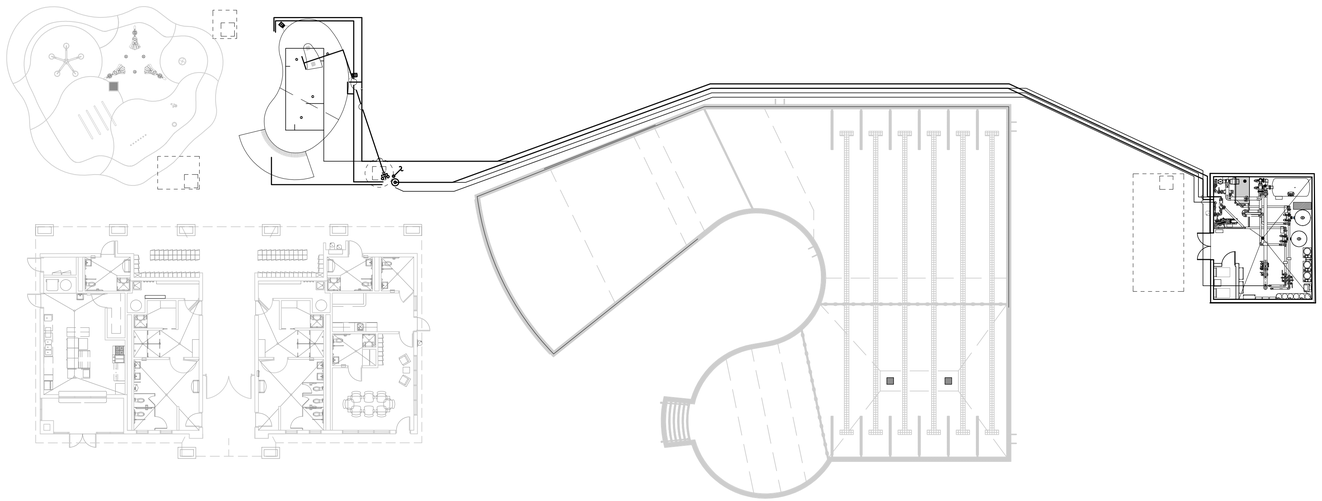

WADING POOL SITE PIPING - OVERALL FOR REFERENCE ONLY

SCALE: 1/16" = 1'-0"

0 16 32 48

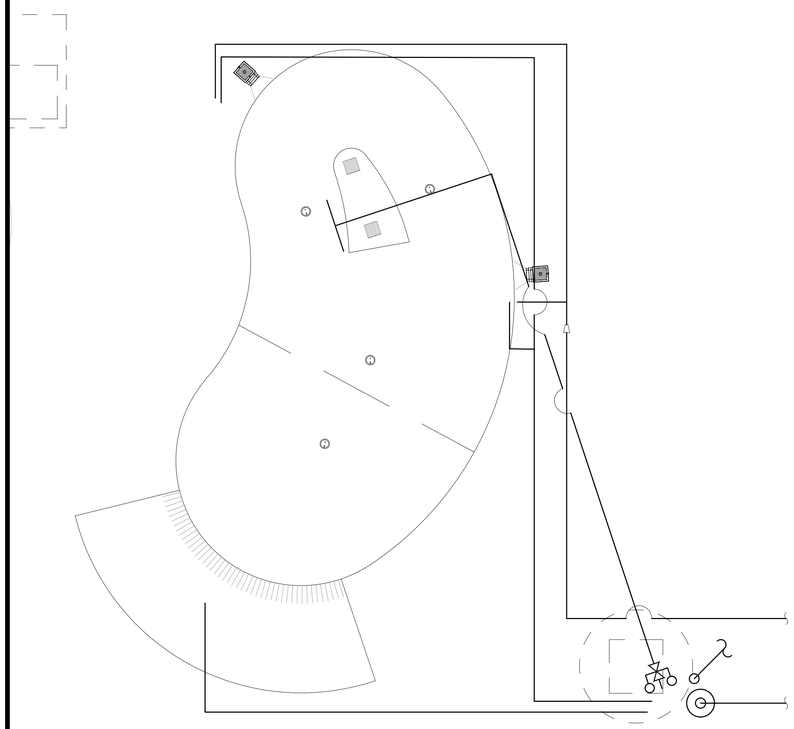

WADING POOL SITE PIPING - SUCTION/GRAVITY

SCALE: 1/4" = 1'-0"

0 4 8 12

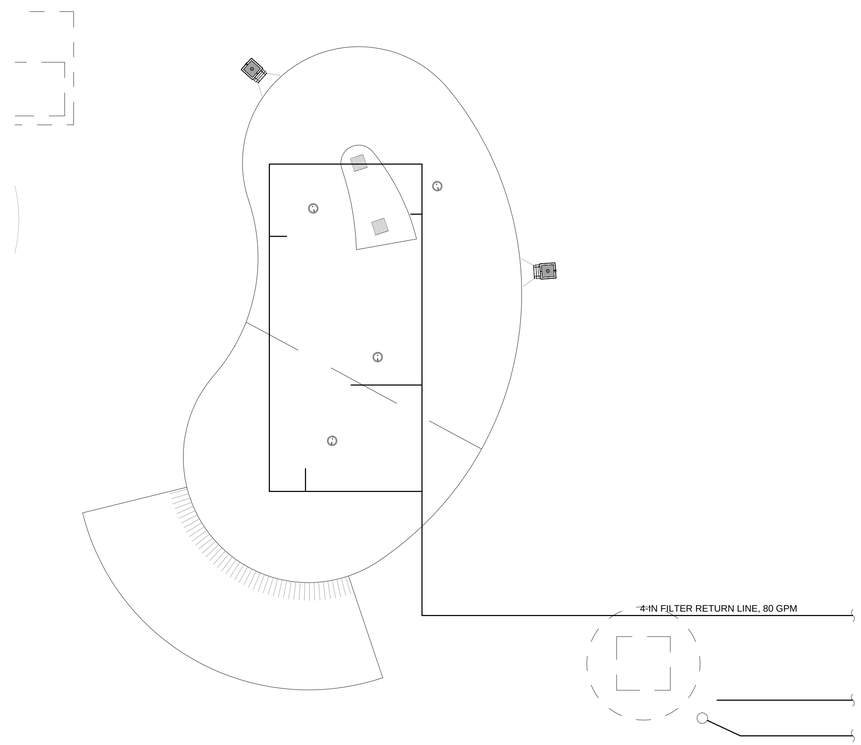

WADING POOL SITE PIPING - RETURN

SCALE: 1/4" = 1'-0"

0 4 8 12

Weston&Sampson®
273 Dividend Road, Rocky Hill, CT 06067
(860) 513-1473 (800) SAMPSON
www.westonandsampson.com

No.	Date	Dr.By	Ck.By	App.By	Description

APPROVED

12-15-15
DATE

REGISTERED PROFESSIONAL ENGINEER

STATE OF CONNECTICUT PHOTOS BY MESTER No. 17475 LICENSED PROFESSIONAL ENGINEER

TOWN OF GREENWICH – DEPARTMENT OF PUBLIC WORKS
RITCH AVENUE WEST, GREENWICH, CONNECTICUT

BYRAM PARK POOL REPLACEMENT

WADING POOL SITE PIPING

CADD NO.	SCALE:	CONTRACT:	JOB NO.	DR.BY	DSN.BY	CHK.BY	APP.BY
GREENWICH	AS NOTED	–	2130336	S.A.A.	M.P.M.	–	–

FILE NO. SP3.3

SHEET – OF –

12/16/2015 01:03:02PM G:\CADD-Current_Set\Sheets\SP-3.3 WADING POOL SITE PIPING.dwg

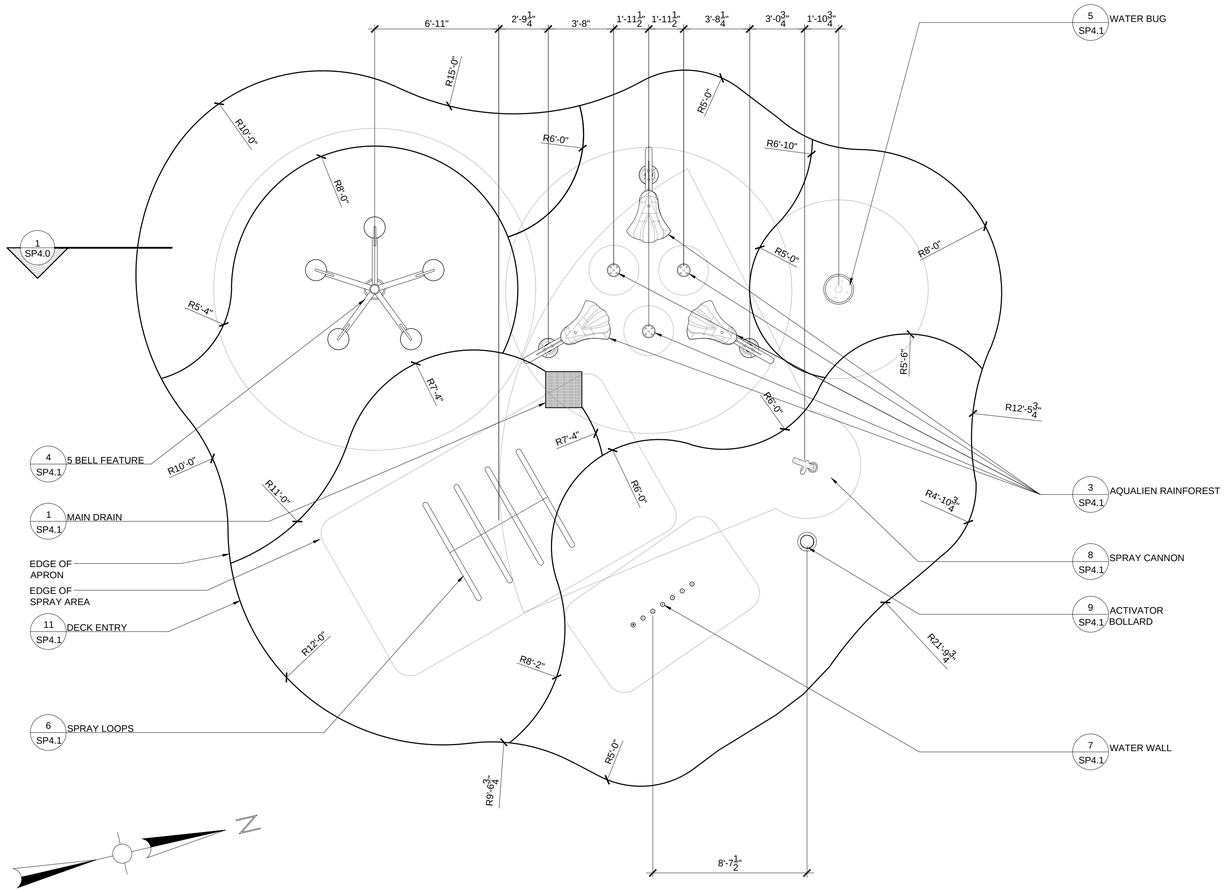

SPRAY DECK PLAN VIEW

SCALE: 1/4" = 1'-0"

0 4 8 12

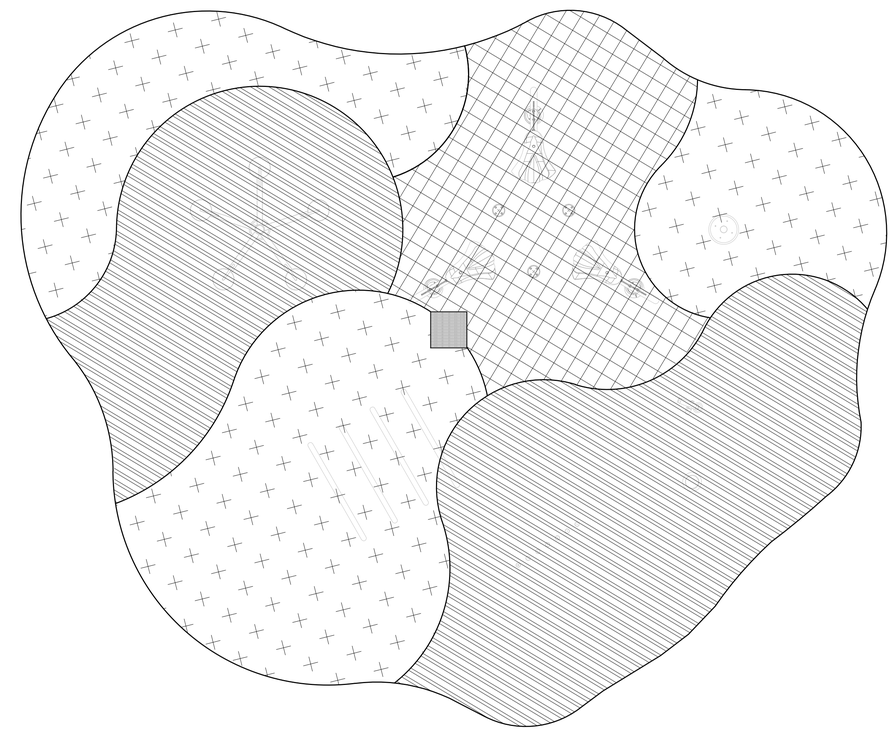

SPRAY DECK PLAN VIEW

SCALE: 1/4" = 1'-0"

0 4 8 12

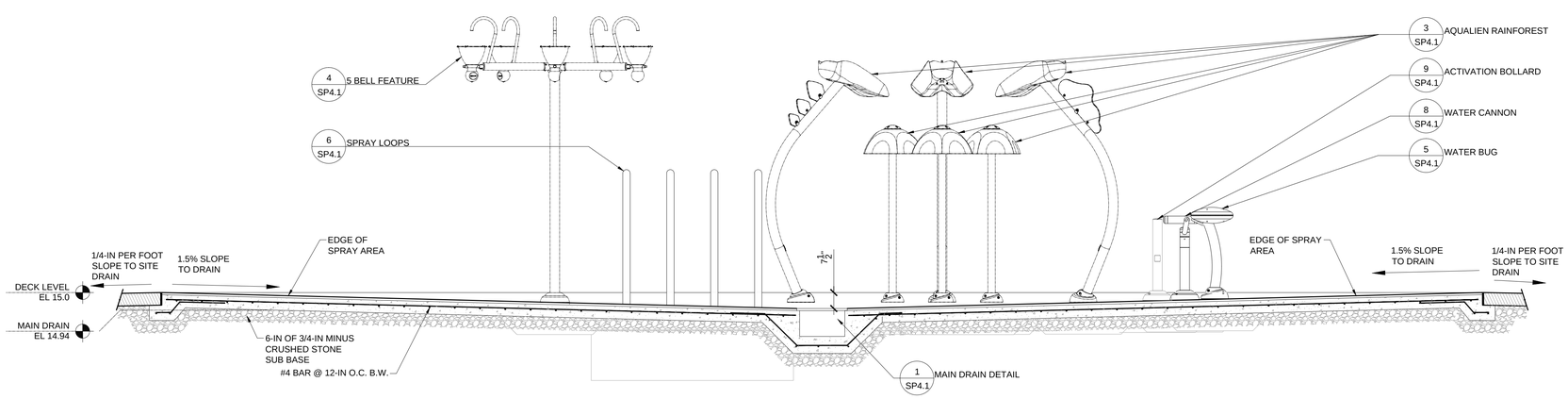

1 SPRAY DECK SECTION

SCALE: 3/8" = 1'-0"

Weston&Sampson®
273 Dividend Road, Rocky Hill, CT 06067
(860) 513-1473 (860) SAMPSON
www.westonandsampson.com

No.	Date	Dr.By	Ck.By	App.By	Description
					APPROVED

12-15-15
DATE

REGISTERED PROFESSIONAL ENGINEER

TOWN OF GREENWICH – DEPARTMENT OF PUBLIC WORKS
RITCH AVENUE WEST, GREENWICH, CONNECTICUT

BYRAM PARK POOL REPLACEMENT

SPRAY DECK PLAN

CADD NO.	SCALE:	CONTRACT:	JOB NO.	DR.BY	DSN.BY	CHK.BY	APP.BY
GREENWICH	AS NOTED	–	2130336	S.A.A.	M.P.M.	–	–

FILE NO.

SP4.0

SHEET – OF –

12/16/2015 01:04:17PM G:\CADI0-Current_Set\Sheets\SP-4.0 SPRAY PAD PLAN.dwg

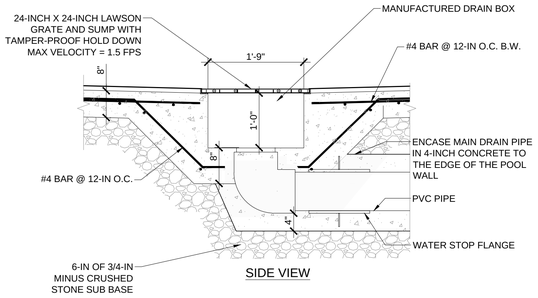

SIDE VIEW

1 MAIN DRAIN

SCALE: 3/4" = 1'-0"

POOL RULES

1. NO FOOD, DRINK, GLASS OR ANIMALS IN POOL OR ON POOL DECK
2. SHOWER BEFORE ENTERING POOL
3. BATHING LOAD: _____ PERSONS MAXIMUM
4. POOL HOURS: ___ AM TO ___ PM
5. NOT INTENDED FOR NIGHTTIME SWIMMING
6. ALL PERSONS SHALL BATHE WITH WARM WATER AND SOAP BEFORE ENTERING THE POOL.
7. ANY PERSONS KNOWN OR SUSPECTED OF HAVING A COMMUNICABLE DISEASE SHALL NOT USE THE POOL.
8. SPITTING OR BLOWING THE NOSE IN THE POOL IS PROHIBITED.

RUNNING, BOISTEROUS OR ROUGH PLAY (EXCEPT SUPERVISED WATER SPORTS) IS PROHIBITED.

NO DIVING

THESE LETTERS SHALL CONTRAST THE BACK GROUND COLOR AND BE NO LESS THAN 1 INCH HIGH

THIS SIGN IS MINIMUM REQUIRED TO MEET CODE, THIS OR EQUIVALENT SHALL BE INSTALLED PRIOR TO HEALTH INSPECTION. SIGN MAY BE ADJUSTED FOR AESTHETICS AT ANY TIME BUT SHALL HAVE MINIMUM SHOWN. THIS SIGN SHALL BE MADE OF ACRYLIC.

POOL RULES SIGN PER 19-13-B33b. PUBLIC POOLS

1. POOL RULES MUST BE DISPLAYED ON A SIGN AT OR NEAR THE POOL SIDE AND MUST BE LEGIBLE FROM THE POOL DECK.
2. RULES SHALL BE STATED AS CODE REQUIRES AS A MINIMUM.
3. LETTERING FOR THE POOL RULES SIGN IS A T LEAST 1-INCH HIGH AND "NO DIVING" IS AT LEAST 4-INCH HIGH.
4. LIFEGUARDS. WHEN NO LIFEGUARD SERVICE IS IN EFFECT A WARNING SIGN SHALL BE PLACED IN PLAIN VIEW AND SHALL STATE "WARNING - NO LIFEGUARD ON DUTY" WITH LEGIBLE LETTERS, AT LEAST FOUR INCHES HIGH. THIS WARNING SHALL BE EASILY VISIBLE FROM ALL ENTRY POINTS INTO THE POOL AREA.

2 POOL SIGN

SCALE: NOT TO SCALE

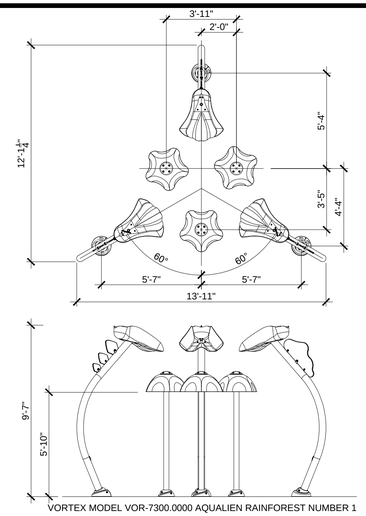

VORTEX MODEL VOR-7300.0000 AQUALIEN RAINFOREST NUMBER 1

3 AQUALIEN RAINFOREST

SCALE: 1/4" = 1'-0"

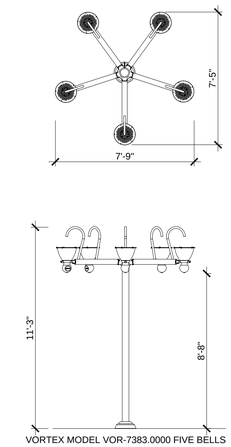

VORTEX MODEL VOR-7383.0000 FIVE BELLS

4 5 BELL FEATURE

SCALE: 1/4" = 1'-0"

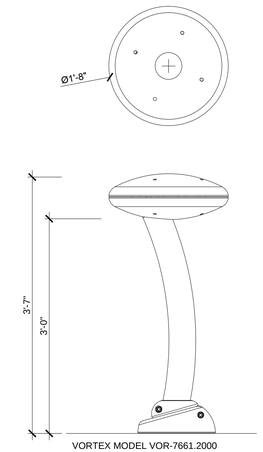

VORTEX MODEL VOR-7661.2000 WATER BUG NUMBER 4

5 WATER BUG

SCALE: 1/2" = 1'-0"

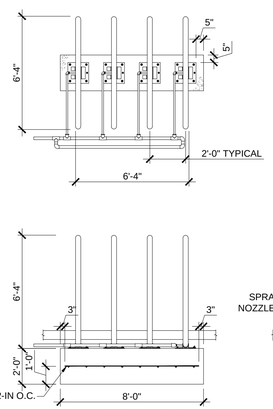

VORTEX MODEL VOR-518.0000 SPRAY LOOPS

6 SPRAY LOOPS

SCALE: 1/4" = 1'-0"

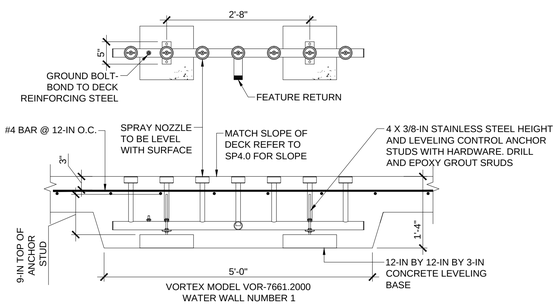

VORTEX MODEL VOR-7661.2000 WATER WALL NUMBER 1

7 WATER WALL

SCALE: 3/4" = 1'-0"

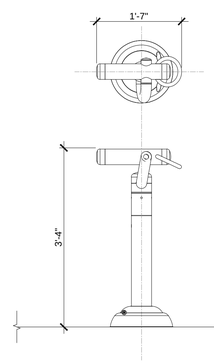

VORTEX MODEL VOR-0201.0000 SPRAY CANNON

8 SPRAY CANNON

SCALE: 3/4" = 1'-0"

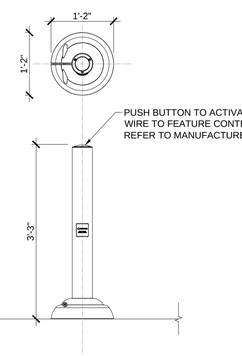

VORTEX MODEL VOR-0611.2000 BOLLARD ACTIVATOR NUMBER 3

9 BOLLARD ACTIVATOR

SCALE: 3/4" = 1'-0"

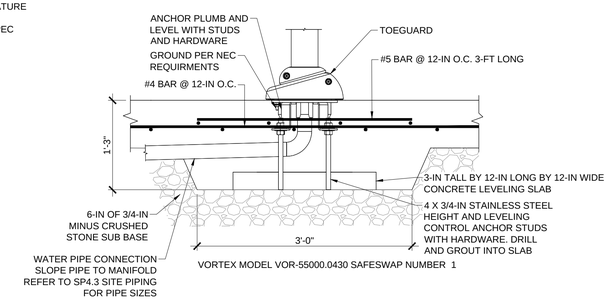

VORTEX MODEL VOR-55000.0430 SAFESWAP NUMBER 1

10 ANCHOR

SCALE: 1" = 1'-0"

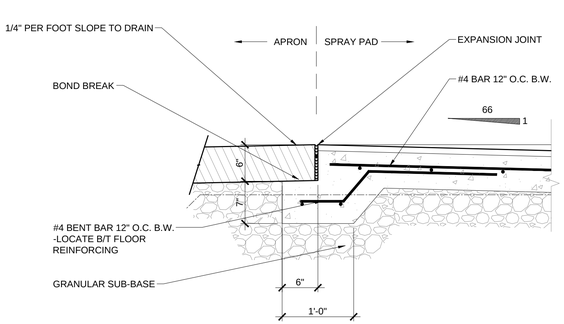

11 DECK ENTRY

SCALE: 1" = 1'-0"

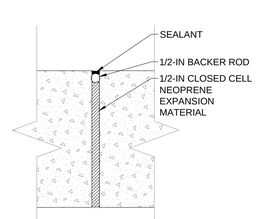

12 EXPANSION JOINT

SCALE: NOT TO SCALE

Weston&Sampson®
273 Dividend Road, Rocky Hill, CT 06067
(860) 513-1473 (800) SAMPSON
www.westonandsampson.com

No.	Date	Dr.By	Ck.By	App.By	Description
					APPROVED

12-15-15 DATE

REGISTERED PROFESSIONAL ENGINEER

TOWN OF GREENWICH – DEPARTMENT OF PUBLIC WORKS
RITCH AVENUE WEST, GREENWICH, CONNECTICUT

BYRAM PARK POOL REPLACEMENT

SPRAY DECK DETAILS

CADD NO.	SCALE:	CONTRACT:	JOB NO.	DR.BY	DSN.BY	CHK.BY	APP.BY
GREENWICH	AS NOTED	–	21303.36	S.A.A.	M.P.M.	–	–

SP4.1

FILE NO.

SHEET – OF –

12/16/2015 01:06:56PM G:\CAD\0-Current_Set\Sheets\SP-4.1 SPRAY PAD DETAIL.dwg

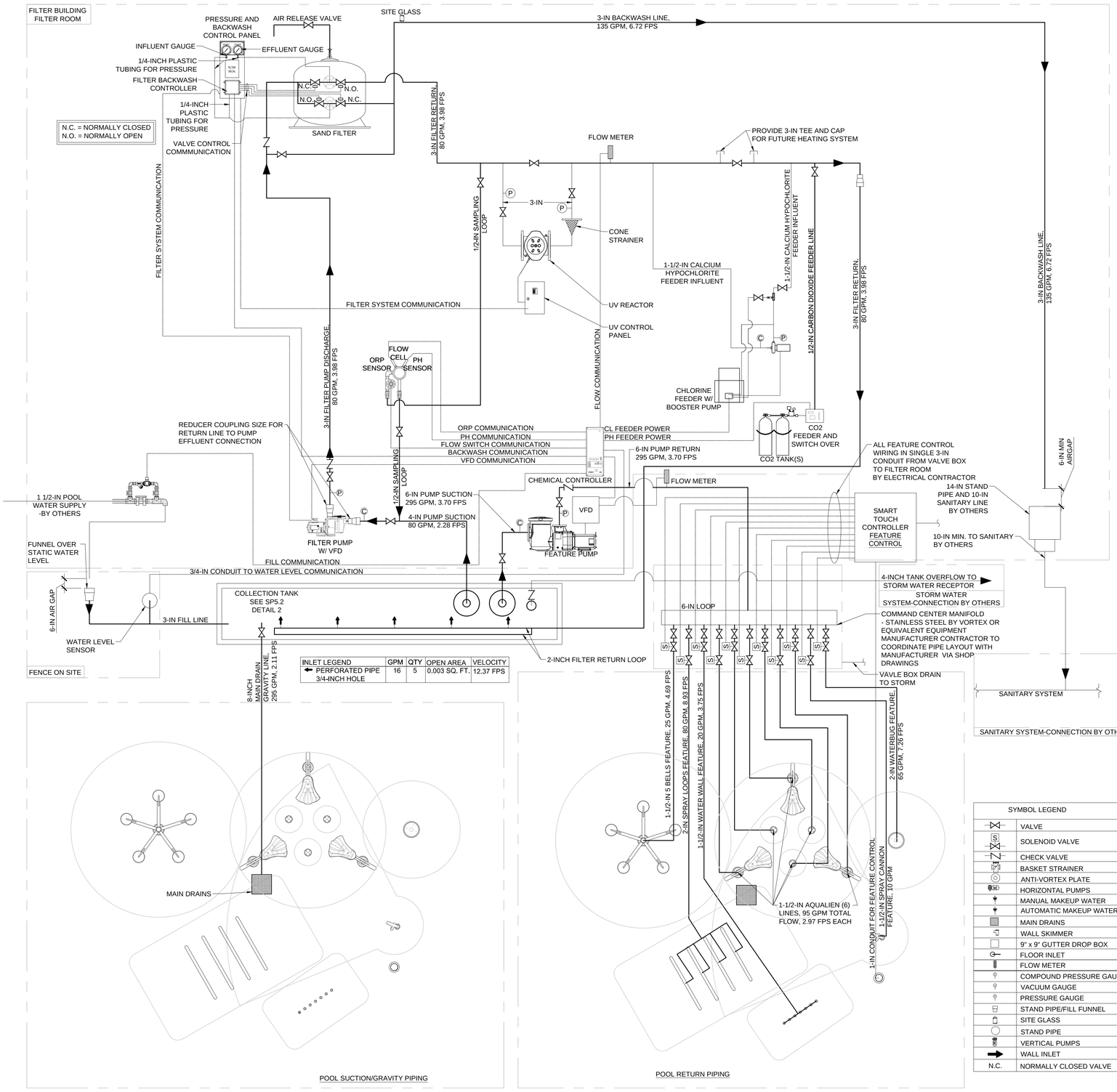

INLET LEGEND	GPM	QTY	OPEN AREA	VELOCITY
PERFORATED PIPE 3/4-INCH HOLE	16	5	0.003 SQ. FT.	12.37 FPS

SPRAY DECK PIPING SCHEMATIC

SCALE: NOT TO SCALE

SPRAY DECK EQUIPMENT SCHEDULE

PERIMETER OVERFLOW AND RECIRCULATION SYSTEM

MARK	QTY	ITEM	MANUFACTURER	CAT NO.	DESCRIPTION
1	1	MAIN DRAIN GRATE	LAWSON AQUATICS	MLD-FG-2424-WT	24-INCH BY 24-INCH PVC GRATE WITH FIBERGLASS SUPPORT RODS COMPLY WITH ASME/ANSI A112.19.8-2007 UNBLOCKABLE REQUIREMENTS. OPEN AREA PROVIDED 216 SQ. IN., .295 GPM.
2	1	HYDROSTATIC RELIEF VALVE	CUSTOM	CUSTOM	ONE VALVE MODEL SP1056 HAYWARD HYDROSTATIC RELIEF VALVE

FILTER AREA MISCELLANEOUS EQUIPMENT

MARK	QTY	ITEM	MANUFACTURER	CAT NO.	DESCRIPTION
3	5	PRESSURE GAUGE	WEKSLER	UA2584L	2-1/2-INCH DIA. FACE, 0-60 PSI
4	3	COMPOUND GAUGE	WEKSLER	UA25K4L	2-1/2-INCH DIA. FACE, 0-30 INCHES HG, 0-60 PSI
5	1	EYE WASH STATION	SHARED WITH ACTIVITY POOL		

FILTRATION EQUIPMENT

MARK	QTY	ITEM	MANUFACTURER	CAT NO.	DESCRIPTION
6	1	COLLECTION TANK	PHOENIX PRECAST PRODUCTS	PRECAST	5'-0" X 7'-0" X 5'-0" COLLECTION TANK WITH TANK HATCH OPENING, AND ALL PIPE SLEEVES PER PIPING PLANS.
7	2	TANK HATCH	BILCO	TER-4	HATCH, SINGLE LEAF, 150 POUND PER SQUARE FOOT LOAD RATING, ALUMINUM FRAME, INFILL TO MATCH SURROUNDINGS AND T-316 STAINLESS STEEL HARDWARE.
8	2	ANTI-VORTEX PLATE	NEPTUNE BENSON	(1)AVPLATE04PVCKIT (1)AVPLATE06PVCKIT	PVC PLATE WITH ALL STAINLESS STEEL HARDWARE FOR 4-INCH AND 6-INCH PIPE
9	1	WATER LEVEL SENSOR	NEPTUNE BENSON	WLC-200	WATER LEVEL CONTROL AND 3 PROBE WITH FITTINS AND PROBES AS REQUIRED FOR FILL CONTROLL AND SHALL INCLUDE REQUIRED SOLENOID VALVE.
10	1	FILTER PUMP	PENTAIR	011012	3 HP VARIABLE FLOW WITH INTEGRAL STRAINER, 80 GPM AT 45.34 TDH, 230 VOLT, 1 PHASE AND VFD ATTACHED
11	1	FEATURE PUMP	PENTAIR	340033	7.5 HP PUMP WITH INTEGRAL STRAINER, 295 GPM AT 45.34 TDH, 460 VOLT, 3 PHASE
12	1	VFD	PENTAIR	ACUDRIVE XS	7.5 HP VFD, 460V, 3 PHASE, WITH DISCONNECT & BYPASS VARIABLE FREQUENCY DRIVE, NEMA 12 ENCLOSURE.
13	2	FLOW METER	GF SIGNET	2536/9900	DIGITAL PADDLEWHEEL WITH DISPLAY AND RELAY TO VFD
14	1	FILTER	NEPTUNE BENSON	42CCFG-3WAM3-3	HI-RATE SAND FILTER COMPLETE AUTOMATIC SYSTEM, SCHEDULE 80 PVC PIPING WITH MPP3 BACKWASH CONTROLLER.

CHEMICAL EQUIPMENT

MARK	QTY	ITEM	MANUFACTURER	CAT NO.	DESCRIPTION
15	1	CHEMICAL CONTROLLER	BEC SYSTEMS	BECSYS5	CHEMICAL CONTROLLER WITH FLOW CELL ASSEMBLY WITH ORP AND PH SENSOR VFD CONTROL, CONNECT TO VFD, WATERLEVEL AND BACKWASH CONTROL PANEL.
16	1	TABLET CHLORINE FEEDER	PULSAR	PULSAR45	CHLORINE TABLET FEEDER COMPLETE WITH PULSAR BOOSTER PUMP AND VENTURI. BOOSTER PUMP SHALL BE 1# 230V.
17	1	CO_2	BEC SYSTEMS	BECSYS CO2	SINGLE TANK REGULATOR AND AUTOMATIC DUAL TANK SWITCH OVER CARBON DIOXIDE FEEDER 20-200 SCFH, 115V WITH HEATER
18	1	UV	ETS	ECP-113-5SPV	ULTRA VIOLET DISINFECTION WITH CONE STRAINER, 1 PHASE 230V, CONTROL PANEL SHALL BE NEMA 12 MINIMUM PROVIDE (1) EXTRA SET OF BULBS.

DECK SAFETY & MAINTENANCE EQUIPMENT

MARK	QTY	ITEM	MANUFACTURER	CAT NO.	DESCRIPTION
19	1	VACUUM CLEANER HEAD	SHARED WITH ACTIVITY POOL		
20	1	TEST KIT	SHARED WITH ACTIVITY POOL		
21	1	FIRST AID KIT	SHARED WITH ACTIVITY POOL		
22	1	BRUSH	SHARED WITH WADING POOL		
23	1	HANDLE	SHARED WITH WADING POOL		
24	1	VACUUM HOSE	SHARED WITH ACTIVITY POOL		
25	1	PORTABLE VACUUM CLEANER SYSTEM	SHARED WITH ACTIVITY POOL		
26	1	911 PHONE	SHARED WITH WADING POOL		

WATER FEATURE EQUIPMENT

MARK	QTY	ITEM	MANUFACTURER	CAT NO.	DESCRIPTION
27	1	WATER FEATURE	VORTEX	VOR-611	BOLLARD ACTIVATOR NO. 3 WATER FEATURE
28	1	WATER FEATURE	VORTEX	VOR-201	SPRAY CANNON WATER FEATURE 10 GPM WITH 1-1/2-IN LINE
29	1	WATER FEATURE	VORTEX	VOR-318	WATER WALL NO. 1 WATER FEATURE 20 GPM WITH 1-1/2-IN LINE
30	1	WATER FEATURE	VORTEX	VOR-7300	AQUALIEN RAINFOREST NO. 1 WATER FEATURE 95 GPM WITH (6) 1-1/2-IN LINE
31	1	WATER FEATURE	VORTEX	VOR-7383	FIVE BELLS NO. 1 WATER FEATURE 25 GPM WITH 1-1/2-IN LINE
32	1	WATER FEATURE	VORTEX	VOR-518	SPRAY LOOPS WATER FEATURE 80 GPM WITH 2-IN LINE
33	1	WATER FEATURE	VORTEX	VOR-7661	WATERBUG NO. 4 WATER FEATURE 65 GPM WITH 2-IN LINE
34	1	WATER FEATURE CONTROL PANEL	VORTEX	SMARTTOUCH CONTROLLER	CONTROL PANEL IN FILTER ROOM MINIMUM NEMA4
35	1	WATER FEATURE CONTROLL PANEL	VORTEX	COMMAND CENTER MANIFOLD	MANIFOLD IN VALVE BOX ON DECK

DECK DATA CHART

DESCRIPTION	AMOUNT/RATE
TOTAL TANK VOLUME - (GALS)	975 GALS
POOL TURNOVER (T.O.R.)	0.2 HRS. AT 80 GPM
FLOW RATE - TANK FILTRATION	80 GPM
FLOW RATE - FEATURE	295 GPM
FLOW RATE - TOTAL FEATURE AND TANK FILTRATION	375 GPM
BATHING LOAD	39 PERSONS
FILTER AREA	9.0 SQFT
FILTER APPLICATION RATE	5.6 GPM PER SQFT

SYMBOL LEGEND

	VALVE
S	SOLENOID VALVE
	CHECK VALVE
	BASKET STRAINER
	ANTI-VORTEX PLATE
	HORIZONTAL PUMPS
	MANUAL MAKEUP WATER
	AUTOMATIC MAKEUP WATER
	MAIN DRAINS
	WALL SKIMMER
	9" x 9" GUTTER DROP BOX
	FLOOR INLET
	FLOW METER
	COMPOUND PRESSURE GAUGE
	VACUUM GAUGE
	PRESSURE GAUGE
	STAND PIPE/FILL FUNNEL
	SITE GLASS
	STAND PIPE
	VERTICAL PUMPS
	WALL INLET
N.C.	NORMALLY CLOSED VALVE

SPRAY DECK CALCULATIONS:
MAIN DRAIN VELOCITY:

BOOSTER:
(1) 24-IN SQUARE MAIN DRAIN -
TOTAL OPEN AREA:
1 X 216 SQ.IN. (PER MANF.) / 144 = 1.5 SQ. FT.
TOTAL FLOW:
295 GPM/449 (GPM/(CU. FT./S) = 0.66 CU. FT./S
TOTAL VELOCITY:
0.66 (CU. FT./S)/1.5 SQ. FT. = 0.44 F.P.S.

Weston&Sampson®
273 Dividend Road, Rocky Hill, CT 06067
(860) 513-1473 (800) SAMPSON
www.westonandsampson.com

No.	Date	Dr.By	Ck.By	App.By	Description
		A	P	P	R O V E D

12-15-15
DATE
REGISTERED PROFESSIONAL ENGINEER

TOWN OF GREENWICH – DEPARTMENT OF PUBLIC WORKS
RITCH AVENUE WEST, GREENWICH, CONNECTICUT
BYRAM PARK POOL REPLACEMENT

SPRAY DECK PIPING SCHEMTIC

CADD NO.	SCALE:	CONTRACT:	JOB NO.	DR.BY	DSN.BY	CHK.BY	APP.BY
GREENWICH	AS NOTED	–	2130336	S.A.A.	M.P.M.	–	–

FILE NO. SP4.2

SHEET – OF –

12/16/2015 01:09:12PM G:\CADI0-Current_Set\Sheets\SP-4.2 SPRAY DECK PIPING SCHEMATIC.dwg

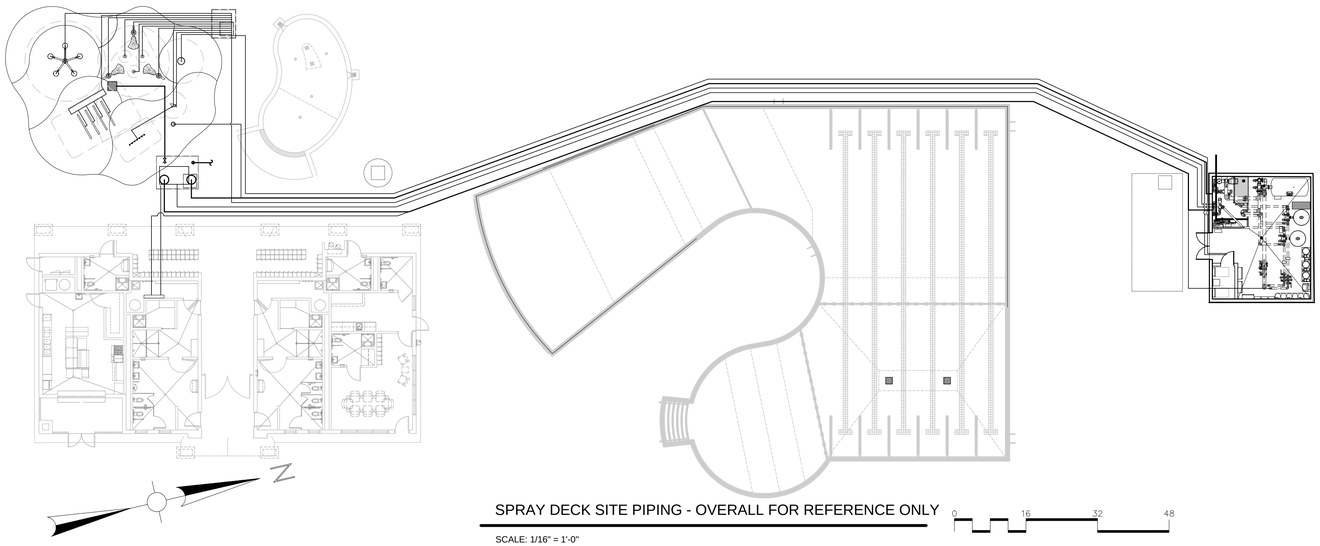

SPRAY DECK SITE PIPING - OVERALL FOR REFERENCE ONLY

SCALE: 1/16" = 1'-0"

0 16 32 48

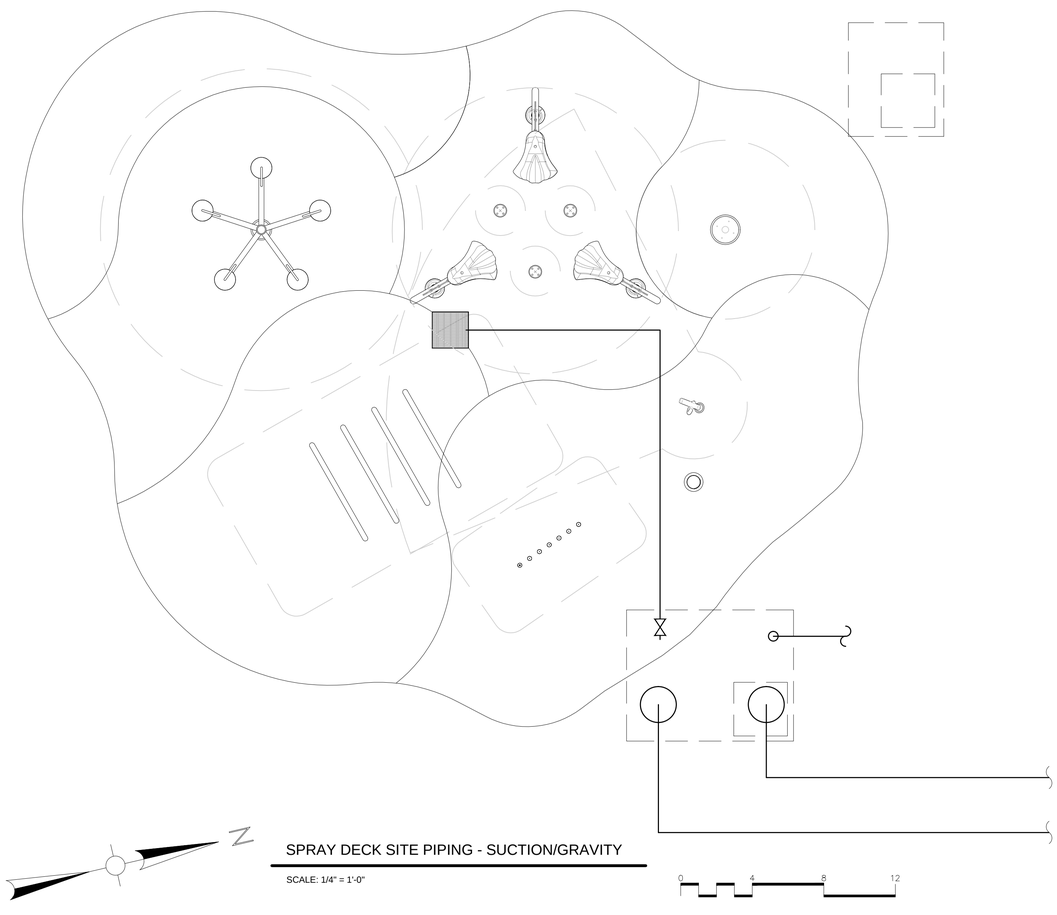

SPRAY DECK SITE PIPING - SUCTION/GRAVITY

SCALE: 1/4" = 1'-0"

0 4 8 12

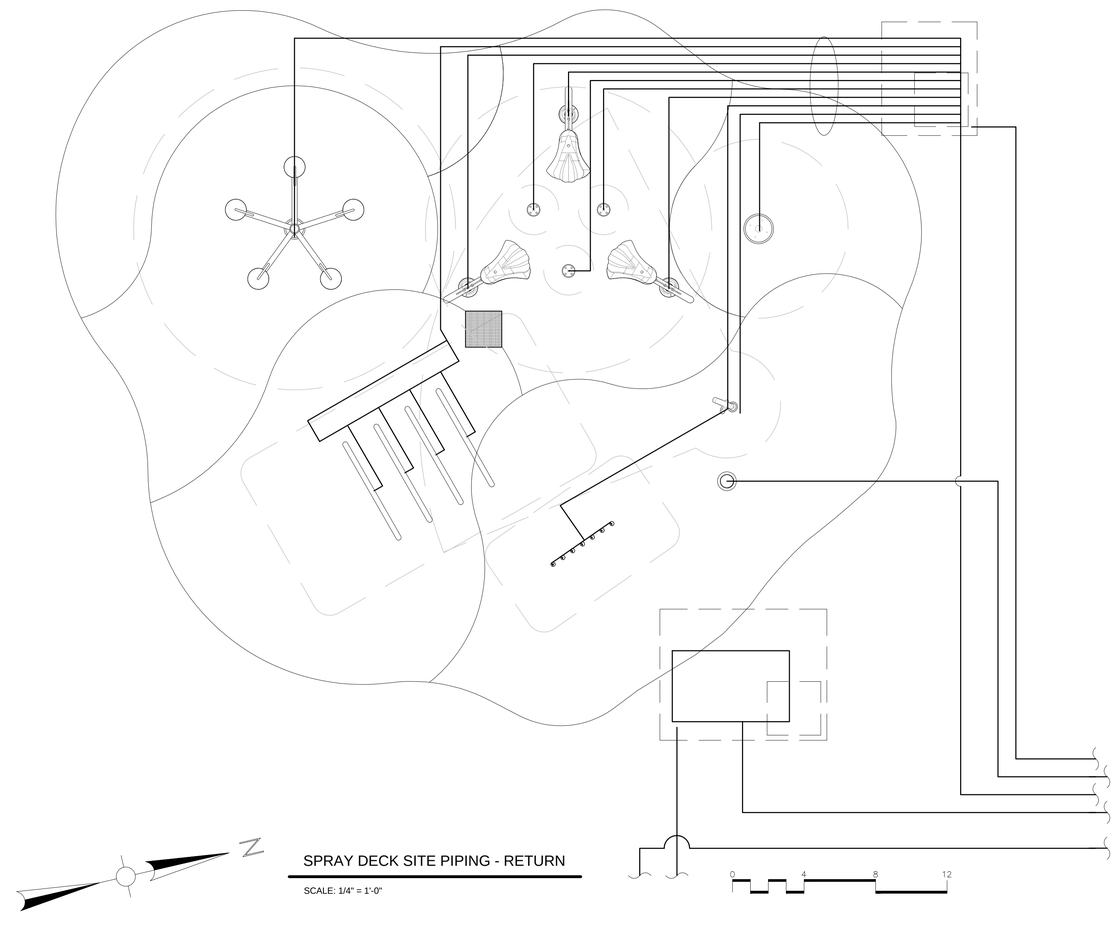

SPRAY DECK SITE PIPING - RETURN

SCALE: 1/4" = 1'-0"

0 4 8 12

Weston&Sampson®
273 Dividend Road, Rocky Hill, CT 06067
(860) 513-1473 (800) SAMPSON
www.westonandsampson.com

No.	Date	Dr.By	Ck.By	App.By	Description
				A P P R O V E D	

12-15-15
DATE

REGISTERED PROFESSIONAL ENGINEER

STATE OF CONNECTICUT ★ CHRISTOPHER M. MESTER ★ No. 17475 ★ LICENSED PROFESSIONAL ENGINEER

TOWN OF GREENWICH – DEPARTMENT OF PUBLIC WORKS
RITCH AVENUE WEST, GREENWICH, CONNECTICUT

BYRAM PARK POOL REPLACEMENT

SPRAY DECK SITE PIPING

CADD NO.	SCALE:	CONTRACT:	JOB NO.	DR.BY	DSN.BY	CHK.BY	APP.BY
GREENWICH	AS NOTED	–	2130336	S.A.A.	M.P.M.	–	–

FILE NO. SP4.3

SHEET – OF –

12/16/2015 01:14:50PM G:\CADD\0-Current_Set\Sheets\SP-4.3 SPRAY PAD SITE PIPING.dwg

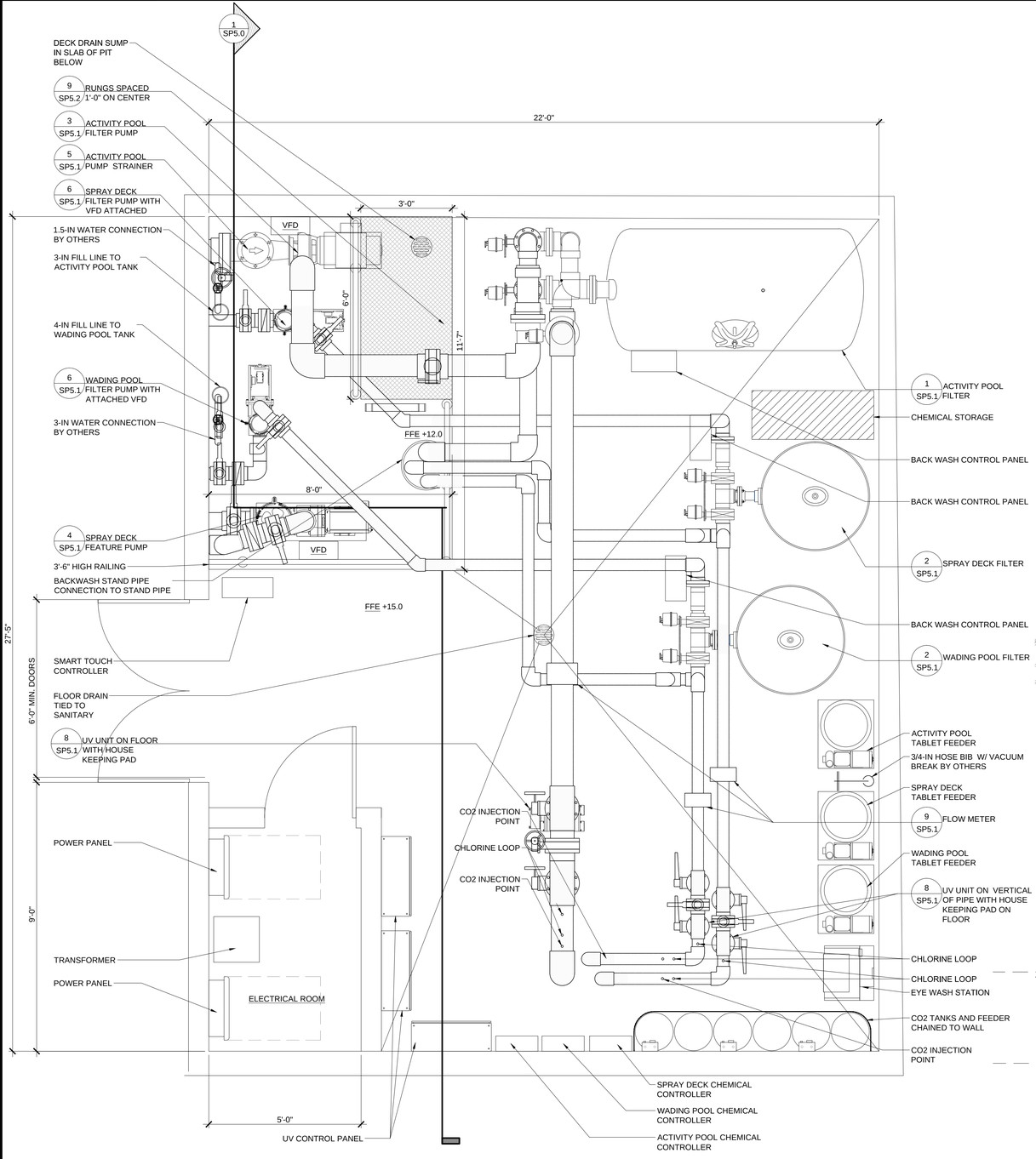

FILTER BUILDING PLAN

SCALE: 1/2" = 1'-0"

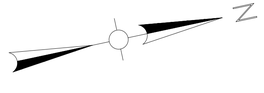

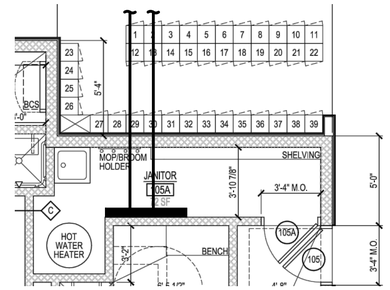

MAIN BUILDING AUTO-FILL LOCATION PLAN

SCALE: 1/4" = 1'-0"

POOL MECHANICAL REQUIREMENTS:

1. THE EQUIPMENT ROOM OR ENCLOSURE SHALL BE LOCKABLE.
2. THE EQUIPMENT ROOM ACCESS SHALL BE CAPABLE OF FITTING ALL EQUIPMENT THAT IS REMOVABLE.
3. EQUIPMENT ROOM FLOOR SHALL BE SMOOTH CONCRETE (SLIP-RESISTANT) AND SLOPED TO A FLOOR DRAIN.
4. EQUIPMENT ROOMS SHALL HAVE FORCED-DRAFT OR CROSS-VENTILATION. REFER TO THE ARCHITECT'S AND MECHANICAL ENGINEER'S DRAWINGS FOR ALL DOOR/WALL LOUVERS AS WELL AS FORCED AIR VENTILATION DETAILS.
5. ALL EXPOSED PVC PIPE SHALL BE TREATED AGAINST U.V. LIGHT.
6. ALL GAUGES SHALL HAVE 2 1/2 -IN DIAL.
7. IN ORDER TO ISOLATE VIBRATION THE FILTER AND FEATURE PUMPS FROM THE FLOOR, THE PUMPS SHALL EACH BE MOUNTED TO A 1/4-INCH THICK STAINLESS STEEL PLATE AND NEOPRENE PADS SHALL BE PLACED BETWEEN THE STAINLESS STEEL PLATE AND THE CONCRETE EQUIPMENT PAD. NEOPRENE PADS SHALL BE EQUIVALENT TO THE MASON INDUSTRIES TYPE SUPER W PADS. THE PADS SHALL BE SIZED TO PROVIDE A MINIMUM OF 0.15-INCH STATIC DEFLECTION UNDER THE WEIGHT OF THE PUMP.
8. TAG ALL VALVES, LABEL ALL PIPES AND POST OPERATING INSTRUCTION INSIDE THE ROOM.
9. CO2 TANKS SHALL BE ANCHORED TO THE WALL WITH CHAINS.
10. ELECTRICALLY OPERATED CHEMICAL FEEDER SHALL BE INTERLOCKED WITH THE FILTER PUMP.
11. THE CHEMICAL SOLUTION TANK SHALL BE LABELED ACCORDING TO THE CONTENTS.
12. SECURE ALL CHEMICAL FEEDER TUBING SO THERE IS NO LOOSE TUBING.
13. SUPPORT ALL PIPING WITH UNISTRUT FRAME FROM EQUIPMENT FLOOR OR ATTACHED TO CEILING AS NEEDED FOR PROPER PIPE SUPPORT OR EQUIVALENT.

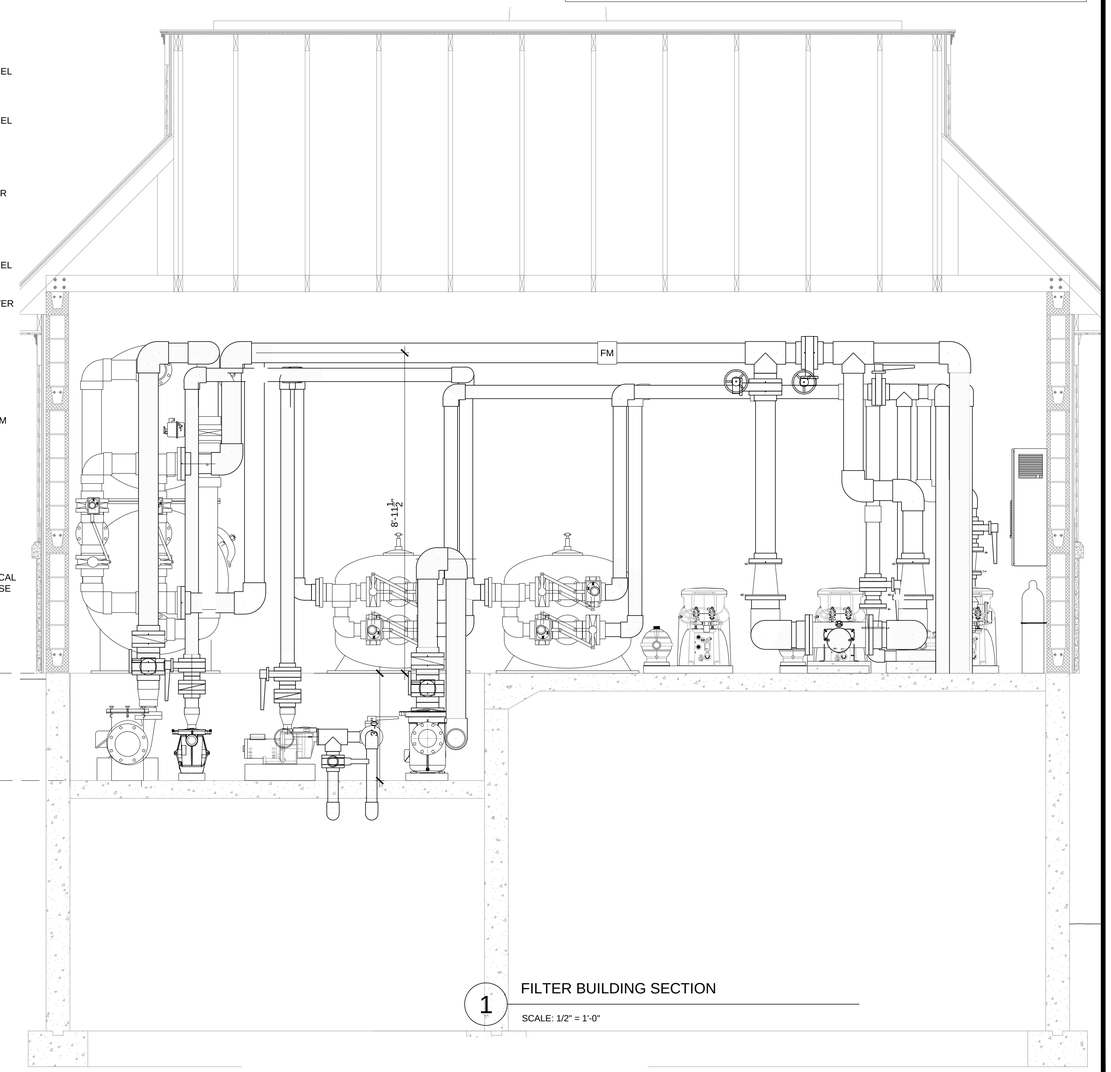

1 FILTER BUILDING SECTION

SCALE: 1/2" = 1'-0"

Weston&Sampson®
273 Dividend Road, Rocky Hill, CT 06067
(860) 513-1473 (800) SAMPSON
www.westonandsampson.com

No.	Date	Dr.By	Ck.By	App.By	Description
				A P P R O V E D	

12-15-15
DATE

REGISTERED PROFESSIONAL ENGINEER

TOWN OF GREENWICH – DEPARTMENT OF PUBLIC WORKS
RITCH AVENUE WEST, GREENWICH, CONNECTICUT
BYRAM PARK POOL REPLACEMENT

FILTER BUILDING

CADD NO.	SCALE:	CONTRACT:	JOB NO.	DR.BY	DSN.BY	CHK.BY	APP.BY
GREENWICH	AS NOTED	–	2130336	S.A.A.	M.P.M.	–	–

FILE NO. SP5.0

SHEET – OF –

12/16/2015 01:23:30PM G:\CADI0-Current_Set\Sheets\SP-5.0 MECHANICAL BUILDING.dwg

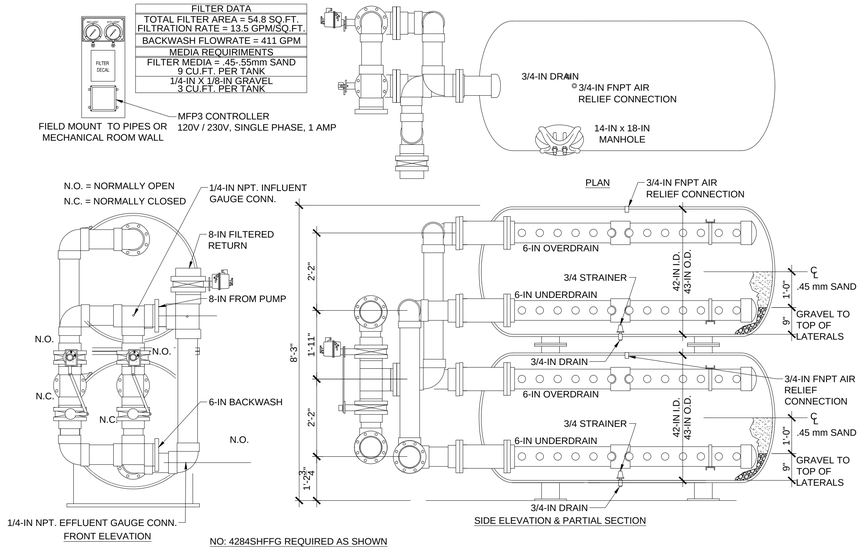

NO: 4284SHFFG REQUIRED AS SHOWN

1 ACTIVITY POOL FILTER

SCALE: 1/2" = 1'-0"

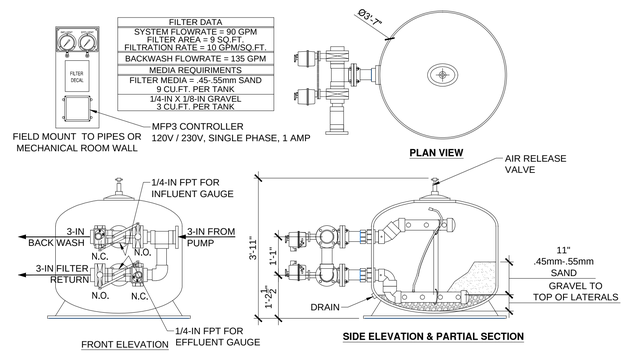

2 SPRAY DECK AND WADING POOL FILTER

SCALE: 1/2" = 1'-0"

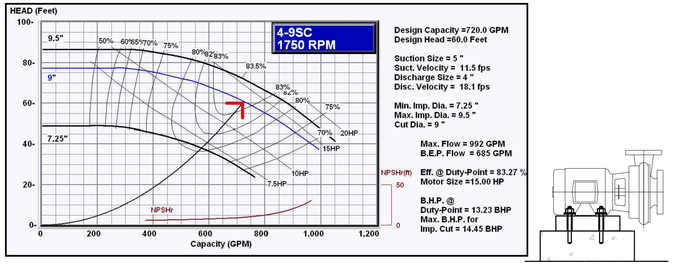

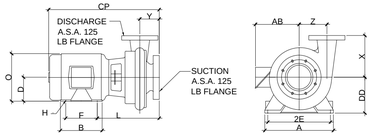

MARLOW MODEL	PHASE	MOTOR FRAME	SPEED	DISCHARGE	SUCTION	A	AB	B	CP	D	2E	F	H	L	O
3-9SC	3	254JP	1750 RPM	4	5	12-1/2	10-3/4	10-3/4	34-3/8	6-1/4	10	8-1/4	17/32	19	13-1/8

3 ACTIVITY POOL FILTER PUMP

SCALE: NOT TO SCALE

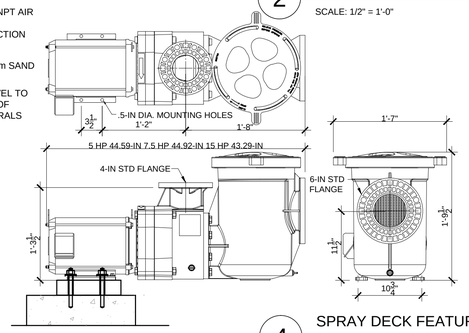

4 SPRAY DECK FEATURE PUMP

SCALE: NOT TO SCALE

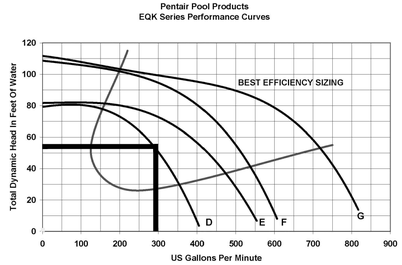

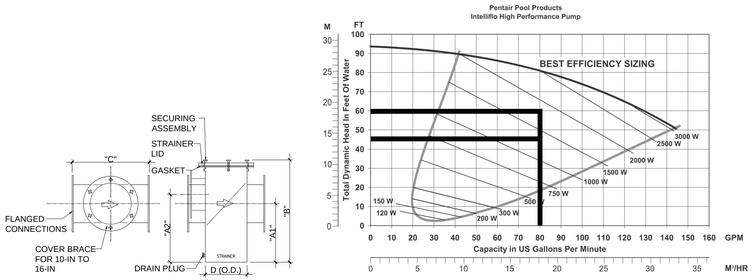

Capacity and Dimension Chart							
Strainer Size	Strainer Part #	SS Basket Prat #	Open Area of Pipe (Sq.In.)	Open Area of Basket (Sq.In.)	Ratio Open Area		
8X5	150NBFG85ER1	NBBSK08EP	50	250	5.0:1		
Dimensions							Approx Weight (lbs.)
Rate	A1	A2	B	C Basket	D	E	
854	12 1/4	13 3/4	26	23 1/2	11 1/4	7 1/2	80

5 STRAINER

SCALE: NOT TO SCALE

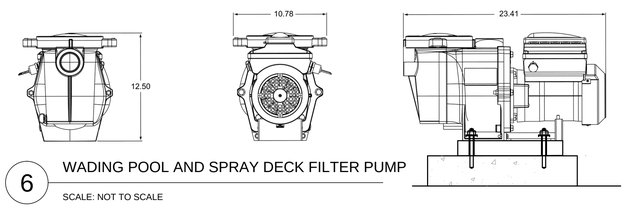

6 WADING POOL AND SPRAY DECK FILTER PUMP

SCALE: NOT TO SCALE

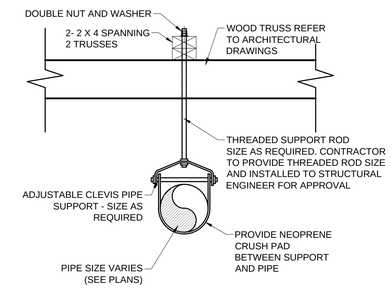

7 PIPE CEILING SUPPORT

SCALE: NOT TO SCALE

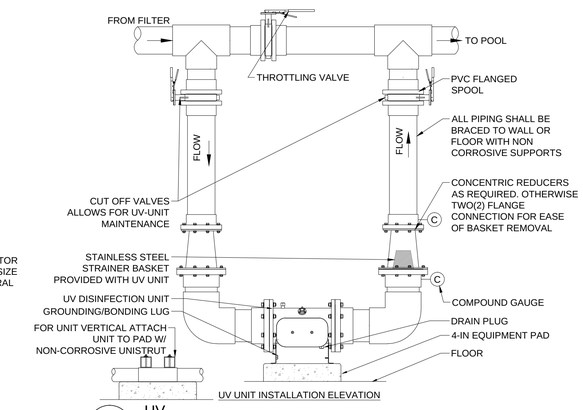

8 UV

SCALE: NOT TO SCALE

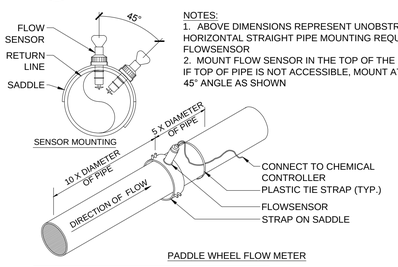

NOTES:
1. ABOVE DIMENSIONS REPRESENT UNOBSTRUCTED HORIZONTAL STRAIGHT PIPE MOUNTING REQUIREMENT FOR FLOWSENSOR
2. MOUNT FLOW SENSOR IN THE TOP OF THE PIPE. IF TOP OF PIPE IS NOT ACCESSIBLE, MOUNT AT 45° ANGLE AS SHOWN

PADDLE WHEEL FLOW METER

FITTINGS	UPSTREAM DISTANCE	DOWNSTREAM DISTANCE
REDUCER	15x I.D.	5x I.D.
90° ELBOW	20x I.D.	5x I.D.
2 x 90° ELBOW	25x I.D.	5x I.D.
2 x 90° ELBOW 3 DIMENSIONS	40x I.D.	5x I.D.
PUMP / VALVE	50x I.D.	5x I.D.

CHART IS FOR HORIZONTAL AND VERTICAL INSTALLATION

9 FLOW METER DETAIL

SCALE: 1/2"=1'-0"

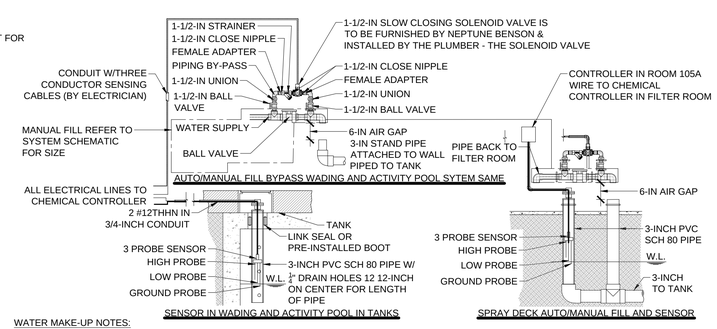

WATER MAKE-UP NOTES:
1. WATER MAKE-UP SUPPLIER TO PROVIDE CONTROL BOX AND RELAY, SOLENOID VALVE, ELECTRODE UNIT, SENSING WELL PROBES, AND PROBE HANGING WIRE.
2. POOL CONTRACTOR TO INSTALL SENSING WELL AND SET PROBES.
3. ELECTRICIAN TO MOUNT CONTROL BOX AND RELAY, SUPPLY AND INSTALL ALL CONDUIT AND CONDUCTORS FOR SYSTEM INTERCONNECTION, AND MAKE ALL NECESSARY ELECTRICAL CONNECTIONS.
4. THE PLUMBER IS TO INSTALL THE SOLENOID VALVE AND PROVIDE ALL THE BYPASS PIPE AND FITTINGS UNLESS OTHERWISE NOTED.

10 TYPICAL POOL AUTOFILL

SCALE: 1/4"=1'-0"

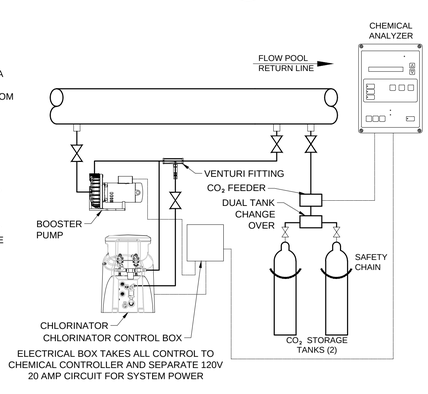

11 CHEMICAL SYSTEM DETAIL

SCALE: NOT TO SCALE

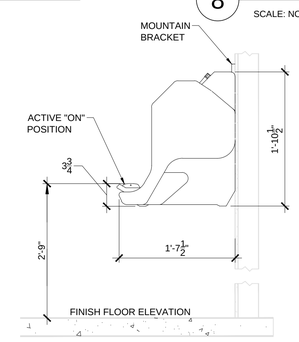

12 EYE WASH STATION

SCALE: NOT TO SCALE

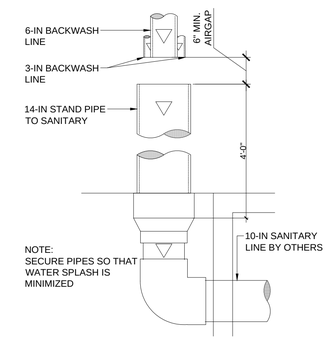

13 BACKWASH STAND PIPE

SCALE: NOT TO SCALE

Weston&Sampson®
273 Dividend Road, Rocky Hill, CT 06067
(860) 513-1473 (800) SAMPSON
www.westonandsampson.com

No.	Date	Dr.By	Ck.By	App.By	Description	DATE
		A	P	P	R O V E D	12-15-15

REGISTERED PROFESSIONAL ENGINEER

TOWN OF GREENWICH – DEPARTMENT OF PUBLIC WORKS
RITCH AVENUE WEST, GREENWICH, CONNECTICUT
BYRAM PARK POOL REPLACEMENT

MECHANICAL DETAILS

CADD NO.	SCALE:	CONTRACT:	JOB NO.	DR.BY	DSN.BY	CHK.BY	APP.BY
GREENWICH	AS NOTED	–	2130336	S.A.A.	M.P.M.	–	–

FILE NO. SP5.1

SHEET – OF –

12/16/2015 01:25:05PM G:\CADI0-Current_Set\Sheets\SP-5.1 MECHANICAL ROOM DETAILS.dwg

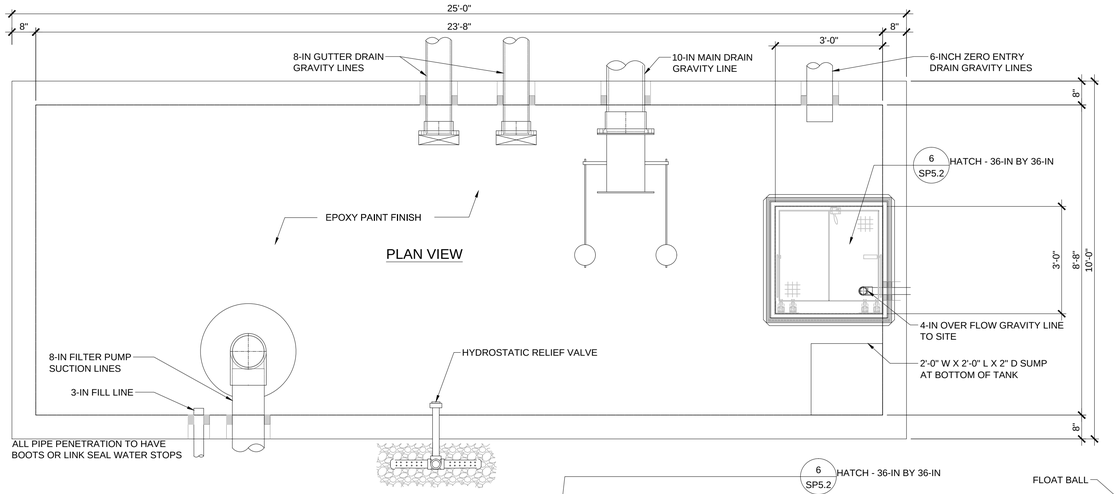

PLAN VIEW

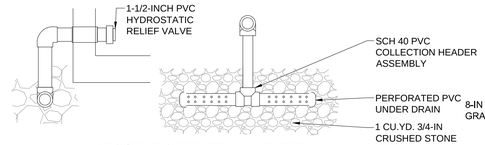

HYDROSTATIC RELIEF VALVE DETAIL

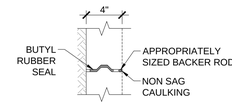

TANK CAULKING DETAIL

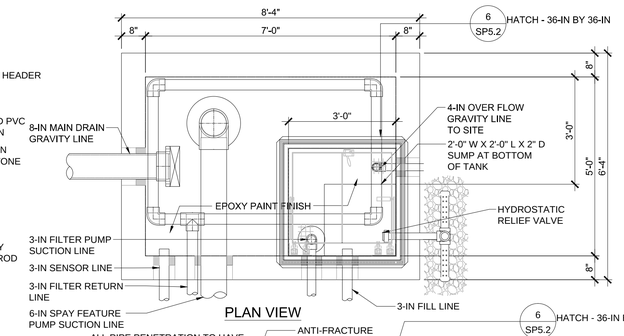

PLAN VIEW

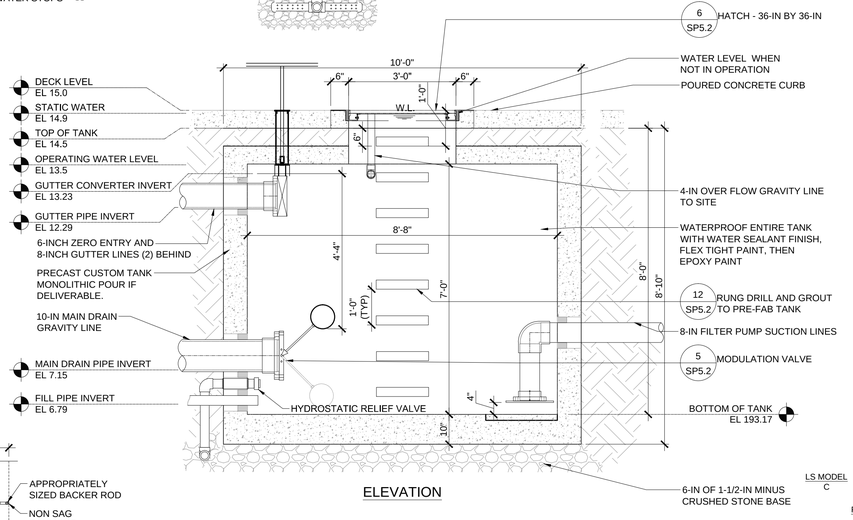

ELEVATION

1 ACTIVITY POOL TANK

SCALE: NOT TO SCALE

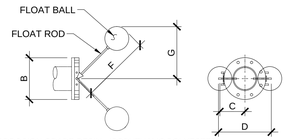

CORROSION GRADE RESIN - ISOPHTHALIC POLYESTER METALLIC PARTS ARE STAINLESS STEEL. FLOAT BALL SHALL BE POLYETHYLENE. FLANGES SHALL CONFORM TO STANDARD ANSI 150 LB. DRILL PATTERNS.

DIMENSION (INCHES)					
I.D.	B	C	D	F	G
10	16	12	25-1/2	35	25
4	9	8-1/2	18-1/2	29	21

4 MODULATION VALVE

SCALE: NOT TO SCALE

LINK-SEAL MODULAR SEALS WITH CORE DRILLED WALL OPENING MANUFACTURED BY PIPELINE SEAL & INSULATOR, INC.
TEL: 800-423-2410 E-MAIL: INFO@PSIPSI.COM

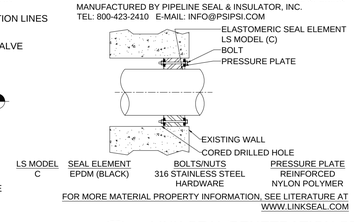

FOR MORE MATERIAL PROPERTY INFORMATION, SEE LITERATURE AT WWW.LINKSEAL.COM

PLASTIC PIPE WITH SAME OUTSIDE DIAMETER (IPS)				
PIPE SIZE (Nom.)	ACTUAL O.D. (Inches)	CORE BIT DRILLED HOLE		
		HOLE I.D.	LINK-SEAL SIZE	LINKS PER SEAL
2	2.375	4.000	LS-300-C	6
2-1/2	2.875	5.000	LS-300-C	8
3	3.500	6.000	LS-315-C	10
4	4.500	6.000	LS-300-C	10
5	5.563	8.000	LS-340-C	13
6	6.625	10.000	LS-475-C	10
8	8.625	12.000	LS-475-C	12
10	10.750	14.000	LS-475-C	14
12	12.750	16.000	LS-475-C	17
14	14.000	18.000	LS-575-C	16

5 LINK SEAL/PENETRATION SEAL

SCALE: NOT TO SCALE

2 SPRAY DECK TANK

SCALE: NOT TO SCALE

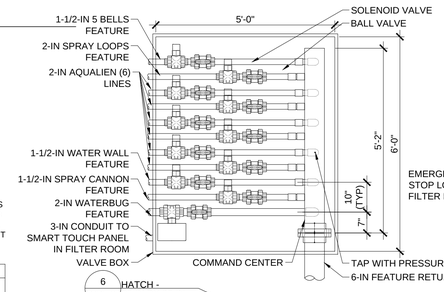

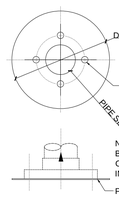

NOTE: WHEN PUMP SUCTION IS BELOW PLATE THROUGH SLAB ORDER PLATE WITHOUT HOLE IN CENTER FOR SUCTION POINT

DIMESIONS			PART #
PIPE SIZE	PLATE DIA.	BOLT SIZE	PVC PLATE
2-1/2-IN	9-IN	5/8-IN	AVPLATE25PVCKIT
3-IN	9-IN	5/8-IN	AVPLATE3PVCKIT
6-IN	16-IN	3/4-IN	AVPLATE6PVCKIT
8-IN	18-IN	3/4-IN	AVPLATE16PVCKIT

NOTE: PLATE DIA./HEIGHT MAY VARY DEPENDING ON REQUIRED SUCTION FLOW.

7 ANTI-VORTEX PLATE

SCALE: NOT TO SCALE

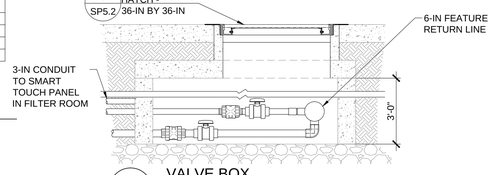

10 VALVE BOX

SCALE: NOT TO SCALE

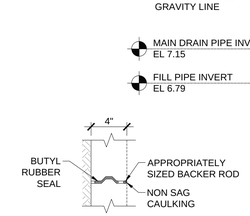

TANK CAULKING DETAIL

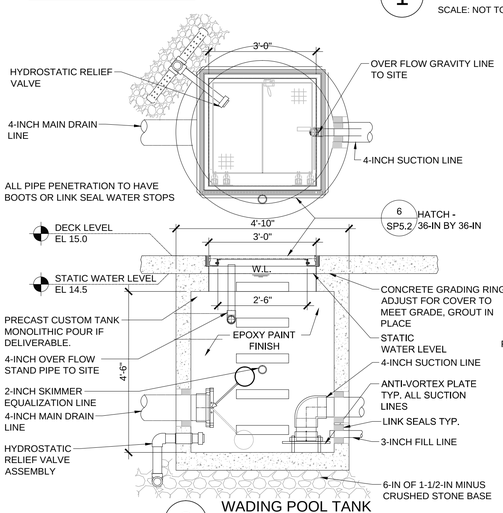

3 WADING POOL TANK

SCALE: NOT TO SCALE

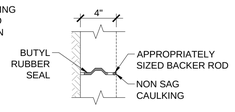

TANK CAULKING DETAIL

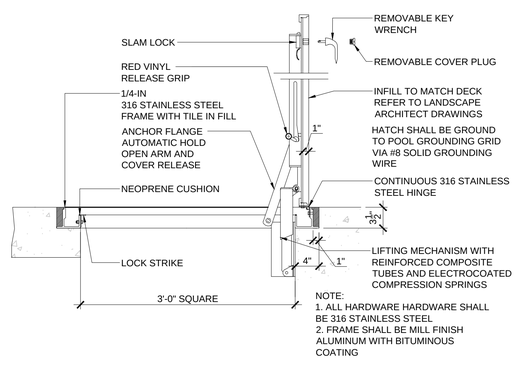

NOTE:
1. ALL HARDWARE HARDWARE SHALL BE 316 STAINLESS STEEL
2. FRAME SHALL BE MILL FINISH ALUMINUM WITH BITUMINOUS COATING

6 TANK HATCH TYPICAL

SCALE: NOT TO SCALE

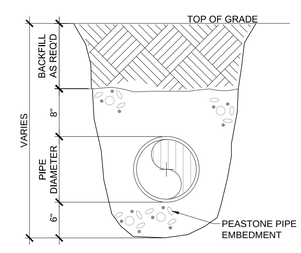

8 BURIED PIPE

SCALE: NOT TO SCALE

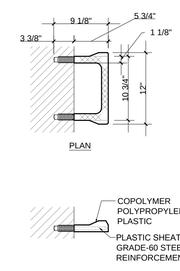

9 LADDER RUNG

SCALE: NOT TO SCALE

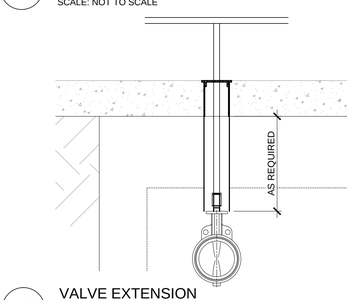

11 VALVE EXTENSION

SCALE: NOT TO SCALE

Weston&Sampson®
273 Dividend Road, Rocky Hill, CT 06067
(860) 513-1473 (800) SAMPSON
www.westonandsampson.com

No.	Date	Dr.By	Ck.By	App.By	Description	DATE
					APPROVED	12-15-15

REGISTERED PROFESSIONAL ENGINEER

TOWN OF GREENWICH – DEPARTMENT OF PUBLIC WORKS
RITCH AVENUE WEST, GREENWICH, CONNECTICUT
BYRAM PARK POOL REPLACEMENT

MECHANICAL DETAILS 2

CADD NO.	SCALE:	CONTRACT:	JOB NO.	DR.BY	DSN.BY	CHK.BY	APP.BY
GREENWICH	AS NOTED	–	2130336	S.A.A.	M.P.M.	–	–

FILE NO. SP5.2

SHEET – OF –

12/16/2015 01:27:49PM G:\CADI0-Current_Set\Sheets\SP-5.2 MECHANICAL ROOM DETAILS 2.dwg