TOWN OF
GREENWICH
Purchasing Department (203) 622-7881 Fax: (203) 622-7776
Town Hall • 101 Field Point Road • Greenwich, CT 06830

March 10, 2016

** ADDENDUM #3 **

TOWN OF GREENWICH, CT

REQUEST FOR BID #7206 DEADLINE: 3/24/16 at 3:00 PM

BYRAM PARK POOL REPLACEMENT PROJECT

Statement 1: Relocation of the Sewer Waste Water Station – The sewer wastewater pumping station has been relocated on the revised drawing in this addendum. No borings have been taken in the new area but it must be assumed by all bidders that rock ledge is present. The station's wet well is very deep and the Town will not accept any extra costs for its excavation.

Question 1: With regards to the pool deck concrete 6" thick. Please provide the color to be used.

Answer 1: The product is to be natural concrete; no color is to be added.

Question 2: Drawing C1.00 Existing Conditions Plan and C1.01 Demolition Plan show existing grade elevations. Do these drawings represent the present grade and elevation at the site?

Answer 2: The area in which the pool construction will take place has been lower by approximately 18" from what's shown on the drawings for the remediation of the arsenic contaminated soil.

Question 3: Referring to plan C4.01 Grading & Drainage Plan – North Subgrade Detention Systems 1, 2, & 3 and plan D1.03 Drainage Details please clarify as it appears the plan C4.01 shows an entirely different subsurface detention system then is depicted on the detail sheet. Typically using the type of system shown on the detail sheet the individual pipe runs are shown whereas what seems to be shown on the C4.01 plan could be concrete chambers and the detail shows a "StormCeptor" type system. If using the SC (StormCeptor) system the number of pipe runs is usually plotted.

Answer 3: The number of chambers for the system is indicated on drawing C4.01.

Question 4: Drawing CS2.03 Slab Plan shows the layout of Control Joints. Per detail 8/CS2.01 are all control joint location receiving the 3/4" x 1'-6" dowel bar @ 12"oc? Also, please provide location of Expansion Joints.

Answer 4: All control joints are to follow Detail 8/CS2.01. Expansion joints are not being utilized.

Revisions to Drawing and Specifications

The following list of Drawings and Specification Sections have been either revised or added to the bid set. Revisions, Deletions and Additions to the Drawings and Specifications are listed in a summary after the List of Specification Revisions.

Revisions to Drawings:

The following is a list of drawings that have been either revised or added to the bid set.

Status	Drawing #	Title
Replaced	ID1.00	Sheet Index
Replaced	C3.01	Site Layout Plan- North
Replaced	C4.01	Grading and Drainage Plan- North
Deleted	C4.01A	Maintenance Road Drainage Improvement Plan
Replaced	C6.00	Utility Plan- South
Replaced	C6.01	Utility Plan- North
Replaced	C6.02	Utility Profile- North
Replaced	D1.01	Sanitary Details
Replaced	D1.04	Drainage Details
Replaced	D1.08	Miscellaneous Details
Replaced	L2.01	Landscape/Hardscape Plan- North
Replaced	L3.00	Hardscape & Amenities Plan- South
Replaced	CS1.00	Structural Details
Replaced	CS1.01	Structural Details
Replaced	CS1.02	Structural Details
Replaced	CS2.00	Structural Details
Replaced	E2.01	Electrical Site Plan
Replaced	E2.02	Electrical Pool Bonding Plan
Replaced	E3.00	Electrical Main Building Lighting Plan
Replaced	E3.01	Electrical Main Building Power Plan
Replaced	E3.02	Electrical Kitchen Power Plan
Replaced	E3.03	Electrical Filter Building Plan
Replaced	E4.00	Electrical One Line Diagram

Replaced	E5.00	Electrical Schedules
Replaced	E6.00	Electrical Details
Replaced	M10.1	Process/Mechanical Schedules and Abbreviations
Deleted	M10.2	Pumping Station Plan and Profile
Replaced	M10.2A	Pumping Station Plan and Section
Added	M10.2B	Pumping Station Plan and Profile
Replaced	M10.3	Mechanical Details
Replaced	M10.4	Mechanical Details
Replaced	H2.01	HVAC Schedules
Replaced	H3.01	HVAC Details
Replaced	P1.01	Plumbing Floor Plan
Replaced	P2.01	Plumbing Details
Replaced	A1.00	Overall Floor Plan- Main Building
Replaced	A3.00	Building Section- Main Building
Replaced	A3.01	Building Section- Entry Gate Filter Bldg
Replaced	A6.00	Room Finish & Door Schedule and Door Details
Replaced	A7.01	Large Scale Bathroom Floor Plans
Replaced	SP1.0	Site Plan and Notes
Replaced	SP2.0	Activity Pool Plan
Replaced	SP2.1	Activity Pool Section
Replaced	SP2.2	Activity Pool Details
Replaced	SP2.4	Activity Pool Piping Schematic
Replaced	SP2.5	Activity Pool Site Piping
Replaced	SP3.2	Wading Pool Piping Schemtic
Replaced	SP3.3	Wading Pool Site Piping
Replaced	SP4.0	Spray Deck Plan
Replaced	SP4.2	Spray Deck Piping Schemtic
Replaced	SP4.3	Spray Deck Site Piping
Replaced	SP5.0	Filter Building
Replaced	SP5.1	Mechanical Details
Replaced	SP5.2	Mechanical Details 2

Revisions to Specification Sections:

The following is a list of Specification Sections the have been either revised or added to the bid set.

Status	Section	Title
Added	02088	Polyvinyl Chloride Pressure Pipe
Edited	02222	Abondement of Existing Sewers and Drains
Added	02831	Segmental Retaining Wall System
Added	03351	Alternate Exposed Aggregate Concrete Finish
Added	08221	Fiberglass Reinforced Door and Door Frame Systems
Replaced	11304	Submersible Wastewater Pumping Equipment
Added	13421	Instrumentation and Control
Added	15109	Portable Davit Crane System
Replaced	15493	Perimeter Overflow Recirculation System
Replaced	15500	Heating, Ventilating, and Air Conditioning
Edited	11000	Equipment- General
Edited	13200	Precast Concrete Structures and Appurtenances
Edited	15110	Process Valves and Appurtenances
Edited	08550	Fiberglass Windows

Summary of Changes

<u>Revisions to Civil/Site Plans and Specifications</u>

A. Replace Cover Sheet with new Cover Sheet dated 3/3/2016, attached.
B. Replace Index Plan, ID1.00 with new drawing ID1.00 dated 3/3/2016, attached.
    1. D1.08 (Miscellaneous Details)
    2. M10.2A (Pumping Station Plan and Section)
    3. M10.2B (Pumping Station Plan and Profile)

C. Delete Drawings C4.01A and M10.2 from the bid package.
    1. C4.01A (Maintenance Road Drainage Improvement Plan)
    2. M10.2 (Pumping Station Plan and Profile)

D. Replace Drawing C3.01 with new Drawing C3.01 dated 3/3/2016, attached.
    1. Updated site layout to include pavement improvements and callouts associated with the maintenance access road from "removed" drawing C4.01A.
    2. Updated location of proposed pumping station and associated fencing, gates, and electrical enclosure. Also added steel bollards and a segmental block retaining wall.
    3. Relocated electrical equipment pads.
    4. Added to the legend a hatch pattern for 2-1/2 inch mill and overlay
    5. Added note from "removed" drawing C4.01A.

E. Replace Drawing C4.01 with new Drawing C4.01 dated 3/3/2016, attached.
   1. Updated with all grading and drainage improvements from "removed" drawing C4.01A associated with the maintenance access road. This includes notes #5, #6, and callouts for abandonment of drainage structures and piping.
   2. Added segmental block retaining wall and associated grading
   3. Added callouts and Note #7 to indicate "INSTALL TIDEFLEX CHECK VALVE, OR APPROVED EQUAL AT EMERGENCY OVERFLOW OUTLET PIPES."
   4. Note #1 was deleted.
   5. Added note #8 to reference specification section 02222.
   6. Revised the retaining wall footing drain from 4" to 8" PVC.

F. Delete Drawing C4.01A from the bid package.
   1. Drawing C4.01A was eliminated and the associated site layout, drainage, grading, and utility information from C4.01A as it relates to the Maintenance Road Improvements was added to drawings C3.01, C4.01, and C6.01, respectively.

G. Replace Drawing C6.00 with new Drawing C6.00 dated 3/7/2016, attached.
   1. Added notes for abandonment.
   2. Eliminated sanitary pipe from footwash (to gravity system) and replaced with piping to a subgrade infiltration system. Added callouts for infiltration system, piping, manhole, and test pit requirement.
   3. Added notes #3 and #4.

H. Replace Drawing C6.01 with new Drawing C6.01 dated 3/3/2016, attached.
   1. Revised the entire sanitary gravity system, pump station location, force main location and associated callouts, electrical enclosure, fencing, gates. A segmental retaining wall was added adjacent to the pump station as well.
   2. The sanitary line from the footwash was eliminated.
   3. Electrical equipment pads and conduits were relocated.
   4. The 6" DI water service from the filter building was revised to 3" DI.
   5. The 2.5" CU water service to the main building was relocated.
   6. A 2" CU water service (irrigation) to the main building was added.
   7. Added note #5, #6, and #7.
   8. Revised the retaining wall footing drain from 4" to 8".

I. Replace Drawing C6.02 with new Drawing C6.02 dated 3/3/2016, attached.
   1. Revised both profiles in their entirety.

J. Replace Drawing D1.01 with new Drawing D1.01 dated 3/3/2016, attached.
   1. Replaced detail for sewer lateral connection.
   2. Replaced detail for precast sanitary manhole.

K. Replace Drawing D1.04 with new Drawing D1.04 dated 3/3/2016, attached.
   1. Added detail for pre-treatment sediment forebay from "removed sheet C4.01A.

L. Replace Drawing D1.08 with new Drawing D1.08 dated 3/3/2016, attached.
Added details for:
1. Segmental Concrete Retaining Wall
2. Fence Post Installation at Retaining Wall
3. Bollard
4. Sewer Lateral Cleanout
5. Drop Connection
6. Valve and Box
7. Crushed Stone Support when d>12"

M. Add Specification Section 02088 for "Polyvinyl Chloride Pressure Pipe", dated 3/3/2016, attached.

N. Add Specification Section 02831 for "Segmental Retaining Wall System", dated 3/3/2016, attached.

Revisions to Mechanical Pump Station Plans and Specifications – Sewer Pump Station

A. Replace Drawing M10.1 with new Drawing M10.1 dated 3/7/2016, attached.
1. Replace Process General Note 2 with "Install corporation cocks on all building and structure interior piping high points to prevent air binding. Determine exact number and locations of these corporation cocks based upon information depicted on drawings and actual field routing of piping. These manual air releases shall include a ½ inch CPVC corporation cock and ½ inch CPVC tubing adequately supported, extending to a local area drain. Routing of tubing and selected drain to be reviewed with, and accepted by, Engineer."

B. Replace Drawing M10.2 with new Drawing M10.2A dated 3/7/2016, attached.

C. Add Drawing M10.2B dated 3/7/2016, attached.

D. Replace Drawing M10.3 with new Drawing M10.3 dated 3/7/2016, attached.
1. Delete "Concrete Pedestal Detail". Add "Red Valve Pressure Sensor" to the Gauge Assembly.

E. Replace Drawing M10.4 with new Drawing M10.4 dated 3/7/2016, attached.
1. Delete "Closed-Tank Submersible Transmitter Typical Mounting Detail" and "Typical Disconnect or Junction Box Detail".

F. Add Specification Section 02088 for "Polyvinyl Chloride Pressure Pipe", dated 3/3/2016, attached.

G. Edit Specification Section 02222, "Abandonment of Existing Sewers and Drains" as follows:
1. Paragraph 3.02.A.2: Replace "clean" with "flowable".

2. Paragraph 3.03.1. Replace last sentence with "The Greenwich Sewer Division will remove pump cores, control panels, radios, etc. Coordinate work with Sewer Division."
3. Paragraph 3.03.3: Replace "clean" with "flowable".

H. Edit Specification Section 11000, "Equipment – General" as follows:
1. Paragraph 2.06, Variable Frequency / Adjustable Speed Drive Motor Controllers: Delete paragraph in its entirety and renumber subsequent paragraphs.
2. Section 2.07.B, Energy Incentive Programs: Replace "Northeast Utilities (NU) Connecticut Light & Power (CL&P)" with "Eversource".
3. Paragraph 2.15, Gauges: Delete paragraph in its entirety and renumber subsequent paragraphs.

I. Replace Section 11304, "Submersible Wastewater Pumping Equipment" with new Section 11304, dated 3/3/2016, attached.

J. Edit Specification Section 13200, "Precast Concrete Structures and Appurtenances" as follows:
1. Paragraph 1.04.C.2: Replace "... Engineer in the Commonwealth of Massachusetts." with "... Engineer in the state where project is being constructed."
2. Paragraph 1.04.D.2: Replace "... Engineer in the Commonwealth of Massachusetts." with "... Engineer in the state where project is being constructed."
3. Paragraph 1.04.D.3: Replace "... Engineer in the Commonwealth of Massachusetts." with "... Engineer in the state where project is being constructed."
4. Paragraph 2.01.B: Delete the word "standard".
5. Paragraph 2.06.B: Add "For pressure pipes," before "make openings..."
6. Paragraph 2.06.E: Add after "Openings...", "for gravity pipes". Replace "manhole base" with "structure".
7. Paragraph 2.06.E.1: Replace "manhole" with "structure".
8. Paragraph 2.07.B: Replace last sentence with "Drains shall be piped to daylight outside of structure."
9. Paragraph 2.07.C: Delete the last sentence and replace with "Hatch cover and frame shall be Flygt Safe-Hatch as manufactured by Flygt."
10. Paragraph 2.07.G: Add "Fall protection shall be non-removable."
11. Paragraph 2.09: Delete paragraphs B and C and renumber subsequent paragraphs.
12. Paragraph 2.09.D: Replace "6-inch" with "4-inch".
13. Add paragraph 2.10:

    2.10 INTERIOR COATING:

    All interior concrete surfaces shall be coated with Tnemec Series 436 Perma-Shield FR, or approved equal. The concrete surfaces shall be prepared in strict accordance with the manufacturer's recommendations and the epoxy coating shall be installed strict accordance with the manufacturer's recommendations.

K. Add Specification Section 13421 for "Instrumentation and Control" dated 3/3/2016, attached.

L. Add Specification Section 15109 for "Portable Davit Crane System" dated 3/3/2016, attached.

M. Edit Specification Section 15110, "Process Valves and Appurtenances (Sewer) as follows:
   1. Paragraph 2.08.A: Replace "all rubber" with "Viton®".
   2. Paragraph 2.08.E: Replace "Series 35-1" with "Series TF-2".
   3. Paragraph 2.19.C: Replace paragraph with "Gauges shall be mounted to Red Valve Series 40W Pressure Sensor. Sleeves shall be Viton®."

Revisions to Pool (Aquatics) Plans and Specifications

A. Replace Drawing SP1.0 with new Drawing SP1.0 dated 3/3/2016, attached.
   1. Revised SP1.0 display reduction in wet deck area of the Spray Deck.
   2. Revised SP1.0 display revisions to the Activity Pool Zero Entry. The Activity Pool Zero Entry was moved north towards the swimming lanes. This created a sloped wet deck condition to the south of the zero entry gutter.

B. Replace Drawing SP2.0 with new Drawing SP2.0 dated 3/3/2016, attached.
   1. Revised SP2.0 display revisions to the Activity Pool Zero Entry. The Activity Pool Zero Entry was moved north towards the swimming lanes. This created a sloped wet deck condition to the south of the zero entry gutter.
   2. Revised SP2.0 display the addition of "No Entry" depth makers on the wet deck east and west entry points.
   3. Revised SP2.0 display the addition of an expansion joint in the zero depth entry ramp.

C. Replace Drawing SP2.1 with new Drawing SP2.1 dated 3/3/2016, attached.
   1. Revised SP2.1 / Sections 1-3 display revised pool base slab. Slab was increased from 8 inches to 15 inches thick. Two mats of rebar are now required in this base slab.
   2. Revised SP2.1 / Sections 1-3 and Detail – 4 – Activity Pool Step Section display the modified straight back step gutter.
   3. Revised SP2.1 / Detail – 5 – Activity Pool Zero Entry Side Section display the modified wet deck transition from the gutter and dry deck profile.
   4. Revised SP2.1 / Section 3, display the addition of an expansion joint on the zero depth entry.
   5. Revised SP2.1 / Detail 4 – Activity Pool Step Section display the change in step riser height to 7-5/8".

D. Replace Drawing SP2.2 with new Drawing SP2.2 dated 3/3/2016, attached.
   1. Revised SP2.2 / Detail 1 – Main Drain, display the thickened slab, and two reinforcement mats.
   2. Revised SP2.2 / Detail 2 – Pool Wall, display the thickened slab, and two reinforcement mats. Also, display the change in gutter to a straight back step gutter.
   3. Revised SP2.2 / Detail 3 – Gutter, display the change in gutter to a straight back step gutter.

4. Revised SP2.2 / Detail 4 – Zero Entry Gutter, Pool Wall, display the thickened slab, and revised reinforcement mats, and the addition of sloped zero entry wet deck.
5. Revised SP2.2 / Detail 5 – Depth Marker, display the change in gutter to a straight back step gutter.
6. Revised SP2.2 / Detail 7 – Grab Rail and Step Inserts, display the change in gutter to a straight back step gutter with a recessed step foot well.
7. Revised SP2.2 / Detail 8 – Gutter and Filter Return Converter, display the change in gutter to a straight back step gutter.
8. Revised SP2.2 / Detail 10 – Life Guard Chair, display the change in gutter to a straight back step gutter.
9. Revised SP2.2 / Detail 11 – Safety Line, display the change in gutter to a straight back step gutter.
10. Revised SP2.2 / Detail 12 – Zero Entry Gutter Converter, display the addition of sloped zero entry wet deck.
11. Revised SP2.2 / Detail 13 – Lane line Marker, display the change in gutter to a straight back step gutter.
12. Revised SP2.2 / Detail 14 – Expansion Joint, display the thickened slab, and two reinforcement mats.

E. Replace Drawing SP2.4 with new Drawing SP2.4 dated 3/3/2016, attached.
1. Revised Mark #4 in the Equipment List – Gutter Length has been updated.
2. Revised Mark #32 in the Equipment List – Has updated the voltage for the portable vacuum cleaner.
3. Revised Main Pool Data Chart – To correspond to the change the pool perimeter, surface area, volume, turnover time, and bather load.
4. Revised Collector Tank in the Schematic – Removed valves on the gutter line.
5. Added requirements for programing the backwash cycle.

F. Replace Drawing SP2.5 with new Drawing SP2.5 dated 3/3/2016, attached.
1. Revised Activity Pool Site Piping for Suction / Gravity, return piping; displaying the alterations to the zero depth entry.

G. Replace Drawing SP3.2 with new Drawing SP3.2 dated 3/3/2016, attached.
1. Revised schematic display the removal of valves on gutter line piping.
2. Revised schematic display the addition of a fill controller.
3. Revised Mark #11, display the revised fill controller and probe.

H. Replace Drawing SP3.3 with new Drawing SP3.3 dated 3/3/2016, attached.
1. Revised Wading Pool Site Piping - Suction / Gravity, display the removal of the valves on the gutter line.
2. Revised Wading Pool Site Piping – Suction / Gravity, display the relocation of the 3-inch fill line.
3. Revised Wading Pool Site Piping – Overall for Reference Only, display the ¾" conduit, and the 3-inch fill line connecting the main building to the wading pool collector tank.
4. Revised Wading Pool Site piping – Return, display the realignment of the inlet piping.

I. Replace Drawing SP4.0 with new Drawing SP4.0 dated 3/3/2016, attached.
   1. Revised Spray Deck Plan View, display the revised color pattern on the deck with the associated colors, and the reduction in the size of the wet deck.
   2. Revised Spray Deck Section, display the addition of a main drain.

J. Replace Drawing SP4.2 with new Drawing SP4.2 dated 3/3/2016, attached.
   1. Revised Schematic, addition of a main drain, and increasing the main drain line from 8-inch to 10-inch.
   2. Revised Schematic, moving the Smart Touch controller from the filter building to the main building in a Janitors Closet.
   3. Revised Equipment List, Mark #1, the quantity of main drain covers is now (2).
   4. Revised Schematic, display the addition of the auto fill controller.

K. Replace Drawing SP4.3 with new Drawing SP4.3 dated 3/3/2016, attached.
   1. Revised Spray Deck Site Piping – Suction / Gravity, display the additional main drain, and the increase in pipe size from 8-inch to 10-inch.
   2. Revised Spray Deck Site Piping – Return, display the piping route change because of the main drain addition.

L. Replace Drawing SP5.0 with new Drawing SP5.0 dated 3/3/2016, attached.
   1. Revised Filter Building Plan, display the removal of the Smart Touch Controller.
   2. Revised Main Building Auto-Fill Location Plan, display the relocated Smart Touch Controller, Fill Controller for the wading pool and spray deck, and associated conduit and piping leading to it.

M. Replace Drawing SP5.1 with new Drawing SP5.1 dated 3/3/2016, attached.
   1. Revised Detail 10 – Typical Pool Autofill, display reduction in solenoid valve.

N. Replace Drawing SP5.2 with new Drawing SP5.2 dated 3/3/2016, attached.
   1. Revised Detail 1 – Activity Pool Tank, and Detail 2 – Spray Deck Tank, removing the water sealant flex tight finish.
   2. Revised Hydrostatic Relief Valve Detail – Requires one cubic yard of crushed stone wrapped in non-woven filter fabric.

O. Replace Specification Section 15493 with new Specification 15493 dated 3/3/2016, attached.
   1. REMOVE, 15493, Perimeter Overflow Recirculation System, issued with the Construction Documents 12/11/15, and REPLACE with 15493, Perimeter Overflow Recirculation System, dated 03/03/16.

Revisions to Architectural Plans and Specifications

A. Replace Drawing A1.00 with new Drawing A1.00 dated 3/3/2016, attached.
   1. Contract Drawings A1.00, Coordinate CMU wall locations and clear openings with fiberglass ADA shower unit.

B. Replace Drawing A3.00 with new Drawing A3.00 dated 3/3/2016, attached.
   1. Contract Drawings A3.00, added detail tag marker.

C. Replace Drawing A3.01 with new Drawing A3.01 dated 3/3/2016, attached.
   1. Contract Drawings A3.01, added detail 1&2/A3.01 at elliptical arch hallway for more information.

D. Replace Drawing A6.00 with new Drawing A6.00 dated 3/3/2016, attached.
   1. Contract Drawings A6.00, Changed HM frame and door note #2 in Door Schedule to fiberglass door & frame to match details and rest of door schedule.

E. Replace Drawing A7.01 with new Drawing A7.01 dated 3/3/2016, attached.
   1. Contract Drawings A7.01, Coordinate CMU wall locations and clear openings with fiberglass ADA shower unit.

F. Add Specification Section 08221 for "Fiberglass Reinforced Door and Door Frame", dated 3/3/2016, attached.
   1. Exterior Doors to be Hurricane Impact Zone 3 rated.

G. Edit Specification Section 08550 to include, "Windows and glazing to be Hurricane Impact Zone 3 Rated".

Revisions to Landscaping Plans and Specifications

A. Replace Drawing L2.01 with new Drawing L2.01 dated 3/3/2016, attached.
   1. Drawing L2.01 – Modified reference to spray pad enlargement to indicate SP4.0.

B. Replace Drawing L3.00 with new Drawing L3.00 dated 3/3/2016, attached.
   1. Drawing L3.00 – Deleted Spray Pad enlargement and added reference to enlargement on sheet SP4.0.

Revisions to Exterior Structural Plans and Specifications

A. Replace Drawing CS1.00 with new Drawing CS1.00 dated 3/3/2016, attached.
   1. Contract Drawing CS1.00 - Revised underdrain to 8" perforated PVC.

B. Replace Drawing CS1.01 with new Drawing CS1.01 dated 3/3/2016, attached.
   1. Contract Drawing CS1.01- Revised location of utility penetrations. Revised underdrain to 8" perforated PVC.

C. Replace Drawing CS1.02 with new Drawing CS1.02 dated 3/3/2016, attached.
   1. Contract Drawing CS1.02 - Revised underdrain from 4" to 8" perforated PVC. Revised pipe to catch basin from 4" to 8" PVC pipe.

D. Replace Drawing CS2.00 with new Drawing CS2.00 dated 3/3/2016, attached.
   1. Contract Drawing CS2.0 - Revised underdrain from 4" to 8" perforated PVC.

E. Add Specification Section 03351 for "Alternate Exposed Aggregate Concrete Finish", dated 3/3/16, attached.

Revisions to Plumbing Plans and Specifications

A. Replace Drawing P1.01 with new Drawing P1.01 dated 3/3/2016, attached.
   1. Contract Drawings P1.01 Revised location of water service entrance and showed RBBP and water meter. Added 2" service for irrigation system. Revised location of water service and added water meter for pool filter room.

B. Replace Drawing P2.01 with new Drawing P2.01 dated 3/3/2016, attached.
   1. Contract Drawings P2.01 - Added RPBFP Detail.

Revisions to HVAC Plans and Specifications

A. Replace Drawing H2.01 with new Drawing H2.01 dated 3/3/2016, attached.
   1. Contract Drawings H2.01 Delete "Kitchen Control Center Option" under notes.

B. Replace Drawing H3.01 with new Drawing H3.01 dated 3/3/2016, attached.
   1. Contract Drawings H3.01. Revised Kitchen Exhaust/Make-up control detail, added details 10, 11 & 12.

C. Replace Specification Section 15500, "Heating, Ventilation and Air Conditioning" with new Specification 15500 dated 3/3/2016, attached.
   1. Section 2.01, Paragraph B. Delete in its entirety.
   2. Section 2.07, Paragraph F. Delete lines 2 & 3.
   3. Section 2.07, Paragraph J. Delete line a. Replace "Division 23" with "Division 15" in line b. Replace "Division 26" with "Division 16" in line c.
   4. Added Section 2.11 "Kitchen Hood"

Revisions to Electrical Plans and Specifications

A. Replace Drawing E2.01 with new Drawing E2.01 dated 3/3/2016, attached.
   1. Contract Drawings E2.01 Electrical Site Plan– Transformer and manhole relocations.
   2. Contract Drawings E2.01 Electrical Site Plan–Added collection tank locations.

B. Replace Drawing E2.02 with new Drawing E2.02 dated 3/3/2016, attached.
   1. Contract Drawing E2.02 Electrical Pool Bonding Plan – Added the location of the pool controllers.

C. Replace Drawing E3.00 with new Drawing E3.00 dated 3/3/2016, attached.
   1. Contract drawing E3.00 - Added S1 and C1 type light fixtures.

D. Replace Drawing E3.01 with new Drawing E3.01 dated 3/3/2016, attached.
   1. Contract Drawing E3.01 Electrical Main Building Power Plan – Added the location of the pool controllers and drawing notes.
   2. Contract Drawing E3.01 Electrical Main Building Power Plan – Added circuit to exterior outlet.
   3. Contract Drawing E3.01 Electrical Main Building Power Plan – Added Kitchen emergency off button and gas solenoid.

E. Replace Drawing E3.02 with new Drawing E3.02 dated 3/3/2016, attached.
   1. Contract Drawing E3.02 Electrical Kitchen Power Plan – Added hood mounted 2-pole switch.
   2. Contract Drawing E3.02 Electrical Kitchen Power Plan – Added emergency shutdown wiring diagram.
   3. Contract Drawing E3.02 Electrical Kitchen Power Plan – Changed Panel PPHK panel from 42 pole to 30 pole.
   4. Contract Drawing E3.02 Electrical Kitchen Power Plan – Added circuit to panel PPLK for Solenoid Valve.

F. Replace Drawing E3.03 with new Drawing E3.03 dated 3/3/2016, attached.
   1. Contract Drawing E3.03 Electrical Filter Building Power Plan – Removed Auto Fill controllers and circuits.
   2. Contract Drawing E3.03 Electrical Filter Building Power Plan – Added outlets for the CO2 Controllers.
   3. Contract Drawing E3.03 Electrical Filter Building Power Plan – Deleted splash pad smart controller.
   4. Contract Drawing E3.03 Electrical Filter Building Power Plan – Added exhaust fan EF-3.
   5. Contract Drawing E3.03 Electrical Filter Building Power Plan – Added motorized damper.
   6. Contract Drawing E3.03 Electrical Filter Building Power Plan – Added pool control wiring.

G. Replace Drawing E4.00 with new Drawing E4.00 dated 3/3/2016, attached.
   1. Contract Drawing E4.00 Electrical One Line Diagram – Revised transformer T3A schedule.
   2. Contract Drawing E4.00 Electrical One Line Diagram – Added fused disconnect for concession building feeder.
   3. Contract Drawing E4.00 Electrical One Line Diagram – Revised transformer T3A breaker from 60A-3P to 70A-2P.
   4. Contract Drawing E4.00 Electrical One Line Diagram – Revised grounding detail.

H. Replace Drawing E5.00 with new Drawing E5.00 dated 3/3/2016, attached.
   1. Contract Drawing E5.00 Electrical Schedules – Revised Panel schedules.
   2. Contract Drawing E5.00 Electric Schedules – Revised lighting fixture schedule.

I. Replace Drawing E6.00 with new Drawing E6.00 dated 3/3/2016, attached.
   1. Contract Drawing E6.00 Electrical Details – Added Manhole Detail.

All other terms and conditions remain unchanged.

James Giarraputo Latham, CPPB
Senior Buyer

JGL:am

Attachments: Revised Drawings and Revised Technical Specifications

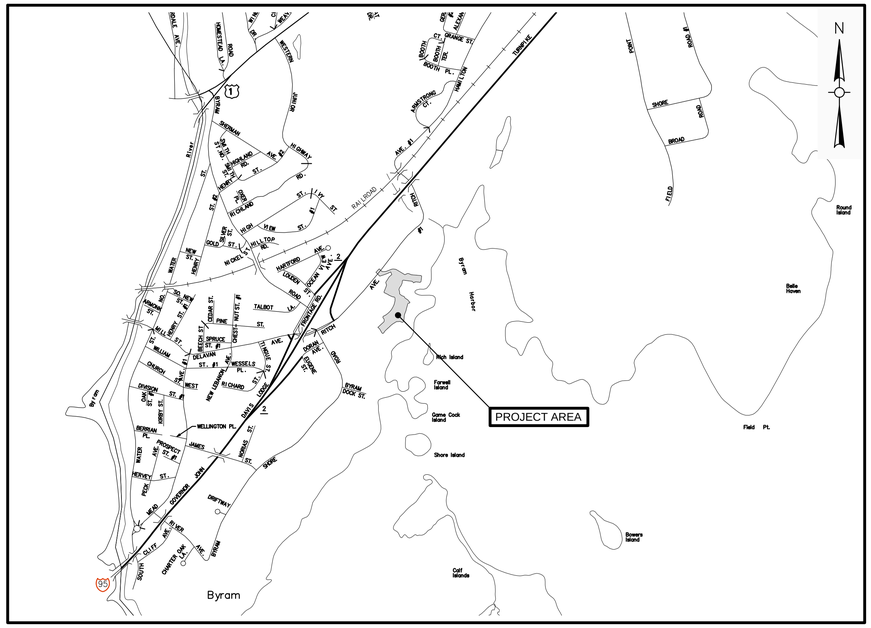

LOCATION MAP
SCALE: 1"=1000'

TOWN OF GREENWICH
DEPARTMENT OF PUBLIC WORKS

BYRAM PARK POOL REPLACEMENT

RITCH AVENUE WEST
GREENWICH, CONNECTICUT

(Revised 03/3/16 per Addendum #1)

CONSTRUCTION DOCUMENTS
12/11/15

Weston&Sampson®

273 Dividend Road, Rocky Hill, Connecticut 06067

R:\Greenwich CT\Greenwich Parks and Recreation\Byram Park\CAD

SHEET INDEX

1 – CIVIL / LANDSCAPE	
G1.00	ABBREVIATIONS, NOTES, AND LEGEND
G1.01	ADDITIONAL NOTES
C1.00	EXISTING CONDITIONS PLAN
C1.01	DEMOLITION PLAN
C2.00	OVERALL SITE PLAN
C2.01	LOW IMPACT DEVELOPMENT PLAN
C3.00	SITE LAYOUT PLAN–SOUTH
C3.01	SITE LAYOUT PLAN–NORTH
C3.02	PARKING LOT CENTERLINE PROFILE
C3.03	PARKING LOT BASELINE GEOMETRY AND CURB RADIUS SCHEDULE
C4.00	GRADING AND DRAINAGE PLAN–SOUTH
C4.01	GRADING AND DRAINAGE PLAN–NORTH
C5.00	EROSION AND SEDIMENTATION CONTROL PLAN
C6.00	UTILITY PLAN–SOUTH
C6.01	UTILITY PLAN–NORTH
C6.02	UTILITY PROFILE–NORTH
D1.00	EROSION & SEDIMENT CONTROL DETAILS
D1.01	SANITARY DETAILS
D1.02	WATER DETAILS
D1.03	DRAINAGE DETAILS
D1.04	DRAINAGE DETAILS
D1.05	PARKING AREA DETAILS
D1.06	MISCELLANEOUS DETAILS
D1.07	MISCELLANEOUS DETAILS
D1.08	MISCELLANEOUS DETAILS
L2.00	LANDSCAPE/HARDSCAPE PLAN–SOUTH
L2.01	LANDSCAPE/HARDSCAPE PLAN–NORTH
L3.00	HARDSCAPE & AMENITIES PLAN–SOUTH
L4.00	LANDSCAPE & HARDSCAPE DETAILS
L4.01	LANDSCAPE & HARDSCAPE DETAILS 2
L4.02	LANDSCAPE & HARDSCAPE DETAILS 3
L4.03	LANDSCAPE & HARDSCAPE DETAILS 4
2 – STRUCTURAL	
S0.00	GENERAL NOTES
S0.01	TYPICAL DETAILS 1
S0.02	TYPICAL DETAILS 2
S1.00	FOUNDATION PLAN MAIN BUILDING
S1.01	FOUNDATION PLAN AND SECTIONS FILTER BUILDING AND ENTRANCE BUILDING
S1.02	FOUNDATION SECTIONS AND DETAILS
S2.00	SLAB PLAN MAIN BUILDING
S2.01	SLAB PLAN FILTER BUILDING AND ENTRANCE BUILDING
S3.00	ROOF FRAMING PLAN MAIN BUILDING
S3.01	ROOF PLAN FILTER BUILDING AND ENTRANCE BUILDING
S3.02	TRUSS ELEVATIONS AND DETAILS
CS1.00	STRUCTURAL DETAILS
CS1.01	STRUCTURAL DETAILS
CS1.02	STRUCTURAL DETAILS
CS2.00	STRUCTURAL DETAILS

2 – STRUCTURAL CONTINUED	
CS2.01	STRUCTURAL DETAILS
CS2.02	ENTRANCE WALL ELEVATION, SECTION AND PLAN
CS2.03	SLAB PLAN
3 – ELECTRICAL	
E1.00	ELECTRICAL LEGEND
E2.01	ELECTRICAL SITE PLAN
E2.02	ELECTRICAL POOL BONDING PLAN
E3.00	ELECTRICAL MAIN BUILDING LIGHTING PLAN
E3.01	ELECTRICAL MAIN BUILDING POWER PLAN
E3.02	ELECTRICAL KITCHEN POWER PLAN
E3.03	ELECTRICAL FILTER BUILDING PLAN
E4.00	ELECTRICAL ONE LINE DIAGRAM
E5.00	ELECTRICAL SCHEDULES
E6.00	ELECTRICAL DETAILS
4 – MECHANICAL	
M10.1	PROCESS/ MECHANICAL SCHEDULES AND ABBREVIATIONS
M10.2A	PUMPING STATION PLAN AND SECTION
M10.2B	PUMPING STATION PLAN AND PROFILE
M10.3	MECHANICAL DETAILS
M10.4	MECHANICAL DETAILS
5 – HVAC	
H0.00	HVAC LEGEND
H1.01	HVAC FLOOR PLAN
H2.01	HVAC SCHEDULE
H3.01	HVAC DETAILS
6 – PLUMBING	
P0.00	PLUMBING LEGEND AND SCHEDULE
P1.00	PLUMBING UNDERSLAB PLAN
P1.01	PLUMBING FLOOR PLAN
P2.01	PLUMBING DETAILS
P2.02	PLUMBING RISER DIAGRAMS
7 – ARCHITECTURAL – BUILDINGS	
A0.00	ABBREVIATIONS, LEGEND, NOTES & WALL TYPES
A0.01	EXTERIOR & INTERIOR BUILDING SIGNAGE
A0.02	CODE & LIFE SAFETY PLAN
A1.00	OVERALL FLOOR PLAN – MAIN BUILDING
A1.01	OVERALL FLOOR PLANS – ENTRY GATE & FILTER BUILDING
A1.02	OVERALL REFLECTED CEILING PLAN – MAIN BUILDING
A1.03	OVERALL REFLECTED CEILING PLANS – ENTRY GATE & FILTER BUILDING
A1.04	OVERALL ROOF PLAN – MAIN BUILDING
A1.05	OVERALL ROOF PLANS – ENTRY GATE & FILTER BUILDING
A2.00	EXTERIOR ELEVATIONS – MAIN BUILDING
A2.00A	EXTERIOR ELEVATIONS – MAIN BUILDING – ALTERNATE

7 – ARCHITECTURAL – BUILDINGS CONTINUED	
A2.01	EXTERIOR ELEVATIONS – MAIN BUILDING
A2.01A	EXTERIOR ELEVATIONS – MAIN BUILDING – ALTERNATE
A2.02	EXTERIOR ELEVATION – ENTRY GATE
A2.03	EXTERIOR ELEVATIONS – FILTER BUILDING
A2.03A	EXTERIOR ELEVATIONS – FILTER BUILDING – ALTERNATE
A3.00	BUILDING SECTION – MAIN BUILDING
A3.01	BUILDING SECTION – ENTRY GATE & FILTER BUILDING
A5.00	MILLWORK DETAILS
A5.01	DETAILS
A6.00	ROOM FINISH & DOOR SCHEDULE AND DOOR DETAILS
A6.01	WINDOW SCHEDULE & DETAILS
A6.02A	MISCELLANEOUS DETAILS – ALTERNATE
A6.03	LOUVER SCHEDULE & DETAILS
A7.00	PLUMBING SCHEDULE AND BATHROOM INTERIOR ELEVATIONS
A7.01	LARGE SCALE BATHROOM FLOOR PLANS
8 – POOL PIPING	
SP1.0	SITE PLAN AND NOTES
SP2.0	ACTIVITY POOL PLAN
SP2.1	ACTIVITY POOL SECTION
SP2.2	ACTIVITY POOL DETAILS
SP2.4	ACTIVITY POOL PIPING SCHEMATIC
SP2.5	ACTIVITY POOL SITE PIPING
SP3.0	WADING POOL PLAN AND SECTION
SP3.1	WADING POOL DETAILS
SP3.2	WADING POOL PIPING SCHEMATIC
SP3.3	WADING POOL SITE PIPING
SP4.0	SPRAY DECK PLAN
SP4.1	SPRAY DECK DETAILS
SP4.2	SPRAY DECK PIPING SCHEMATIC
SP4.3	SPRAY DECK SITE PIPING
SP5.0	FILTER BUILDING
SP5.1	MECHANICAL DETAILS
SP5.2	MECHANICAL DETAILS 2

CONSTRUCTION DOCUMENTS
12/11/15

Weston&Sampson®
273 Dividend Road, Rocky Hill, CT 06067
(860) 513-1473 (800) SAMPSON
www.westonandsampson.com

No.	Date	Dr.By	Ck.By	App.By	Description
1	03/03/16	LEC	JSP	CBW	ADDENDUM #1

APPROVED

REGISTERED PROFESSIONAL ENGINEER _____ DATE _____

TOWN OF GREENWICH – DEPARTMENT OF PUBLIC WORKS
RITCH AVENUE WEST, GREENWICH, CONNECTICUT
BYRAM PARK POOL REPLACEMENT

SHEET INDEX

CADD NO.	SCALE:	CONTRACT:	JOB NO.	DR.BY	DSN.BY	CHK.BY	APP.BY
GREENWICH	NONE	–	2130336	L.E.C.	L.E.C.	J.S.P.	C.B.W.

ID1.00

FILE NO.

SHEET – OF –

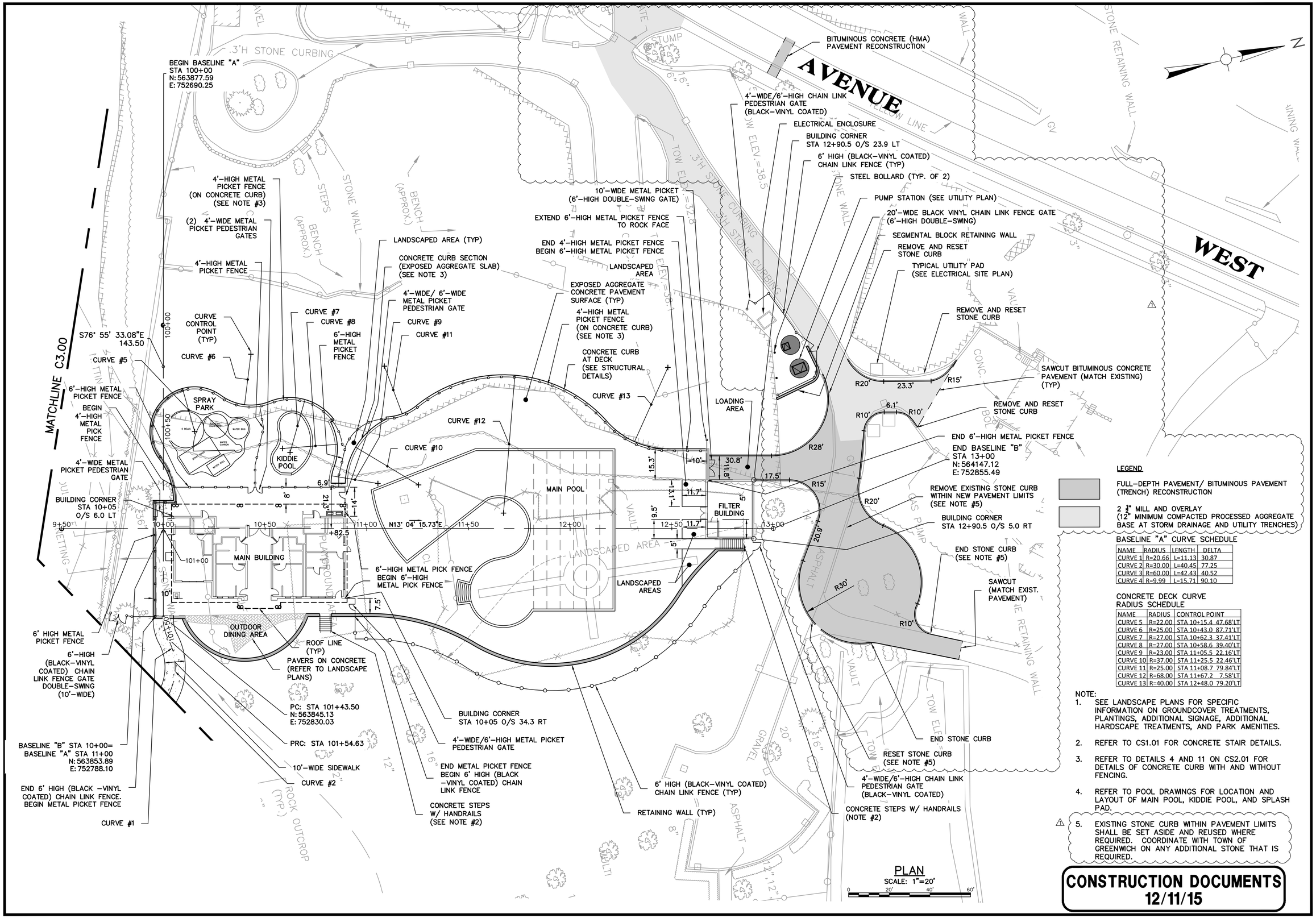

LEGEND

FULL-DEPTH PAVEMENT/ BITUMINOUS PAVEMENT (TRENCH) RECONSTRUCTION

2 ½" MILL AND OVERLAY (12" MINIMUM COMPACTED PROCESSED AGGREGATE BASE AT STORM DRAINAGE AND UTILITY TRENCHES)

BASELINE "A" CURVE SCHEDULE

NAME	RADIUS	LENGTH	DELTA
CURVE 1	R=20.66	L=11.13	30.87
CURVE 2	R=30.00	L=40.45	77.25
CURVE 3	R=60.00	L=42.43	40.52
CURVE 4	R=9.99	L=15.71	90.10

CONCRETE DECK CURVE RADIUS SCHEDULE

NAME	RADIUS	CONTROL POINT
CURVE 5	R=22.00	STA 10+15.4 47.68'LT
CURVE 6	R=25.00	STA 10+43.0 87.71'LT
CURVE 7	R=27.00	STA 10+62.3 37.41'LT
CURVE 8	R=27.00	STA 10+58.6 39.40'LT
CURVE 9	R=23.00	STA 11+05.5 22.16'LT
CURVE 10	R=37.00	STA 11+25.5 22.46'LT
CURVE 11	R=25.00	STA 11+08.7 79.84'LT
CURVE 12	R=68.00	STA 11+67.2 7.58'LT
CURVE 13	R=40.00	STA 12+48.0 79.20'LT

NOTE:

1. SEE LANDSCAPE PLANS FOR SPECIFIC INFORMATION ON GROUNDCOVER TREATMENTS, PLANTINGS, ADDITIONAL SIGNAGE, ADDITIONAL HARDSCAPE TREATMENTS, AND PARK AMENITIES.
2. REFER TO CS1.01 FOR CONCRETE STAIR DETAILS.
3. REFER TO DETAILS 4 AND 11 ON CS2.01 FOR DETAILS OF CONCRETE CURB WITH AND WITHOUT FENCING.
4. REFER TO POOL DRAWINGS FOR LOCATION AND LAYOUT OF MAIN POOL, KIDDIE POOL, AND SPLASH PAD.
5. ⚠1 EXISTING STONE CURB WITHIN PAVEMENT LIMITS SHALL BE SET ASIDE AND REUSED WHERE REQUIRED. COORDINATE WITH TOWN OF GREENWICH ON ANY ADDITIONAL STONE THAT IS REQUIRED.

CONSTRUCTION DOCUMENTS
12/11/15

Weston&Sampson®
273 Dividend Road, Rocky Hill, CT 06067
(860) 513-1473 (800) SAMPSON
www.westonandsampson.com

No.	Date	Dr.By	Ck.By	App.By	Description
1	03/03/16	LEC	JSP	CBW	ADDENDUM #1

APPROVED
REGISTERED PROFESSIONAL ENGINEER
03-07-16
DATE

TOWN OF GREENWICH – DEPARTMENT OF PUBLIC WORKS
RITCH AVENUE WEST, GREENWICH, CONNECTICUT
BYRAM PARK POOL REPLACEMENT

SITE LAYOUT PLAN–NORTH

CADD NO.	SCALE:	CONTRACT:	JOB NO.	DR.BY	DSN.BY	CHK.BY	APP.BY
GREENWICH	1"=20'	–	2130336	L.E.C.	L.E.C.	J.S.P.	C.B.W.

C3.01

FILE NO.

SHEET – OF –

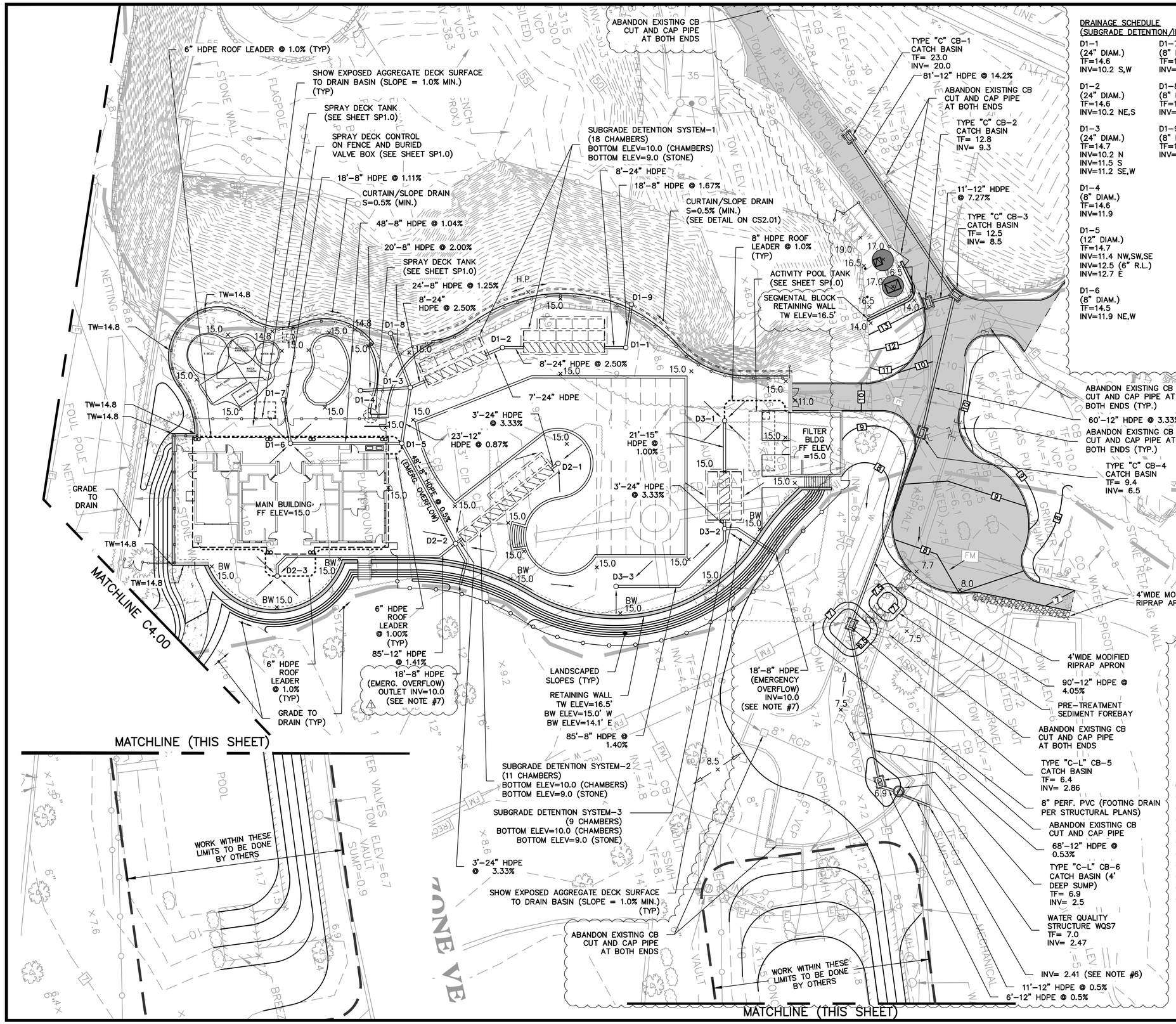

DRAINAGE SCHEDULE
(SUBGRADE DETENTION/INFILTRATION DRAIN BASINS)

D1-1 (24" DIAM.) TF=14.6 INV=10.2 S,W

D1-2 (24" DIAM.) TF=14.6 INV=10.2 NE,S

D1-3 (24" DIAM.) TF=14.7 INV=10.2 N INV=11.5 S INV=11.2 SE,W

D1-4 (8" DIAM.) TF=14.6 INV=11.9

D1-5 (12" DIAM.) TF=14.7 INV=11.4 NW,SW,SE INV=12.5 (6" R.L.) INV=12.7 E

D1-6 (8" DIAM.) TF=14.5 INV=11.9 NE,W

D1-7 (8" DIAM.) TF=14.5 INV=12.1

D1-8 (8" DIAM.) TF=14..0 INV=11.5

D1-9 (8" DIAM.) TF=14.0 INV=10.5

D2-1 (24" DIAM.) TF=14.7 INV=10.1

D2-2 (24" DIAM.) TF=14.6 INV=11.0 N,S INV=12.2 E,W

D2-3 (12" DIAM.) TF=14.7 INV=11.5 W INV=12.5 N,S

D3-1 (24" DIAM.) TF=14.6 INV=10.5 E INV=11.4 N

D3-2 (24" DIAM.) TF=14.6 INV=10.1 W INV=11.4 E INV=12.5 NE

D3-3 (8" DIAM.) TF=14.5 INV=12.1

SUBGRADE DETENTION/INFILTRATION NOTES:

1. ALL SUBGRADE DETENTION/INFILTRATION DRAIN BASINS SHALL BE Nyloplast® DRAIN BASINS, OR APPROVED EQUAL AND EACH SHALL BE FITTED WITH A FlexStorm® (Pure) PERMANANT INLET PROTECTION DEVICE.
2. 24" DIAMETER NYLOPLAST STRUCTURES SHALL HAVE 2' DEEP SUMPS.
3. OVERFLOW PIPING FROM POOLS, AND SPLASHPAD SHALL BE EQUALLY DISTRIBUTED AND PIPED TO SUBGRADE SYSTEMS 2 AND 3.

NOTES:

1. (NOTE #1 DELETED) △1
2. SUBGRADE DETENTION/INFILTRATION SYSTEM SHALL BE Stormtech®, OR APPROVED EQUAL.
3. ALL ROOF LEADERS SHALL BE 6" HDPE (SLOPE =1.0% MIN.).
4. SEE C1.00 FOR LOCATION OF SURVEY BENCHMARKS.REFER TO THE TOWN SPECIFICATION FOR PHASING OF THE PROJECT AND, IN PARTICULAR, THOSE EXISTING UTILITES THAT ARE TO REMAIN IN SERVICE DURING A PARTICULAR PHASE. ALSO REFER TO THE TOWN SPECIFICATION FOR A DESCRIPTION OF THE WORK SHOWN ON THIS SHEET.
5. WATER QUALITY STRUCTURE (WQS7) SHALL BE DESIGNED TO TREAT A WATER QUALITY FLOW = 0.3 CFS AND SHALL BE OF A MODEL AND MANUFACTURER ON THE CONNDOT APPROVED LIST OF HYDRODYNAMIC SEPARATORS. WQS7 SHALL ALSO BE DESIGNED TO RESIST BUOYANCY. △1
6. EXTEND OUTLET PIPE BEYOND FACE OF STONE WALL AND INSTALL AN OUTLET CHECK VALVE, MANUFACTURED BY TIDEFLEX, OR APPROVED EQUAL. REFER TO STRUCTURAL DETAIL ON CS2.00, FOR PENETRATION THROUGH THE EXISTING STONEWALL.
7. INSTALL TIDEFLEX CHECK VALVE, OR APPROVED EQUAL AT EMERGENCY OVERFLOW OUTLET PIPES.
8. ABANDON STRUCTURES AND PIPING IN ACCORDANCE WITH SPECIFICATION SECTION 02222.

CONSTRUCTION DOCUMENTS
12/11/15

PLAN
SCALE: 1"=20'
0 20' 40' 60'

Weston&Sampson®
273 Dividend Road, Rocky Hill, CT 06067
(860) 513-1473 (800) SAMPSON
www.westonandsampson.com

No.	Date	Dr.By	Ck.By	App.By	Description
1	03/03/16	LEC	JSP	CBW	ADDENDUM #1

APPROVED — REGISTERED PROFESSIONAL ENGINEER — DATE 03-07-16

TOWN OF GREENWICH – DEPARTMENT OF PUBLIC WORKS
RITCH AVENUE WEST, GREENWICH, CONNECTICUT
BYRAM PARK POOL REPLACEMENT

GRADING AND DRAINAGE PLAN–NORTH

CADD NO.	SCALE:	CONTRACT:	JOB NO.	DR.BY	DSN.BY	CHK.BY	APP.BY
GREENWICH	1"=20'	–	2130336	L.E.C.	L.E.C.	J.S.P.	C.B.W.

FILE NO. C4.01

SHEET – OF –

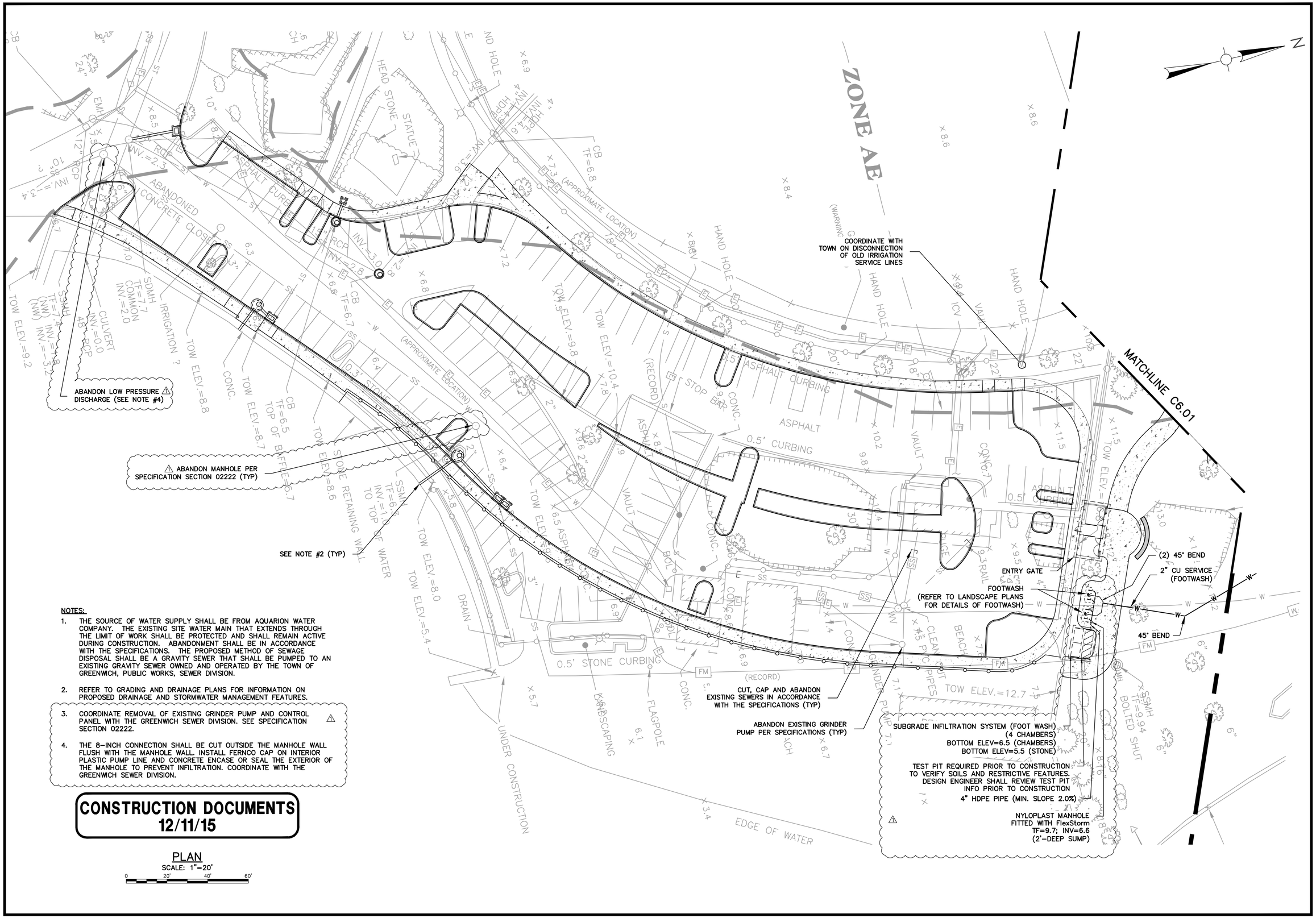

NOTES:

1. THE SOURCE OF WATER SUPPLY SHALL BE FROM AQUARION WATER COMPANY. THE EXISTING SITE WATER MAIN THAT EXTENDS THROUGH THE LIMIT OF WORK SHALL BE PROTECTED AND SHALL REMAIN ACTIVE DURING CONSTRUCTION. ABANDONMENT SHALL BE IN ACCORDANCE WITH THE SPECIFICATIONS. THE PROPOSED METHOD OF SEWAGE DISPOSAL SHALL BE A GRAVITY SEWER THAT SHALL BE PUMPED TO AN EXISTING GRAVITY SEWER OWNED AND OPERATED BY THE TOWN OF GREENWICH, PUBLIC WORKS, SEWER DIVISION.
2. REFER TO GRADING AND DRAINAGE PLANS FOR INFORMATION ON PROPOSED DRAINAGE AND STORMWATER MANAGEMENT FEATURES.
3. COORDINATE REMOVAL OF EXISTING GRINDER PUMP AND CONTROL PANEL WITH THE GREENWICH SEWER DIVISION. SEE SPECIFICATION SECTION 02222. △1
4. THE 8-INCH CONNECTION SHALL BE CUT OUTSIDE THE MANHOLE WALL FLUSH WITH THE MANHOLE WALL. INSTALL FERNCO CAP ON INTERIOR PLASTIC PUMP LINE AND CONCRETE ENCASE OR SEAL THE EXTERIOR OF THE MANHOLE TO PREVENT INFILTRATION. COORDINATE WITH THE GREENWICH SEWER DIVISION.

CONSTRUCTION DOCUMENTS
12/11/15

PLAN
SCALE: 1"=20'
0 20' 40' 60'

Weston&Sampson®
273 Dividend Road, Rocky Hill, CT 06067
(860) 513-1473 (800) SAMPSON
www.westonandsampson.com

No.	Date	Dr.By	Ck.By	App.By	Description
1	03/03/16	LEC	JSP	CBW	ADDENDUM #1

APPROVED
REGISTERED PROFESSIONAL ENGINEER — DATE 03-07-16

TOWN OF GREENWICH – DEPARTMENT OF PUBLIC WORKS
RITCH AVENUE WEST, GREENWICH, CONNECTICUT
BYRAM PARK POOL REPLACEMENT

UTILITY PLAN–SOUTH

CADD NO.	SCALE:	CONTRACT:	JOB NO.	DR.BY	DSN.BY	CHK.BY	APP.BY
GREENWICH	1"=20'	–	2130336	L.E.C.	L.E.C.	J.S.P.	C.B.W.

C6.00

FILE NO.

SHEET – OF –

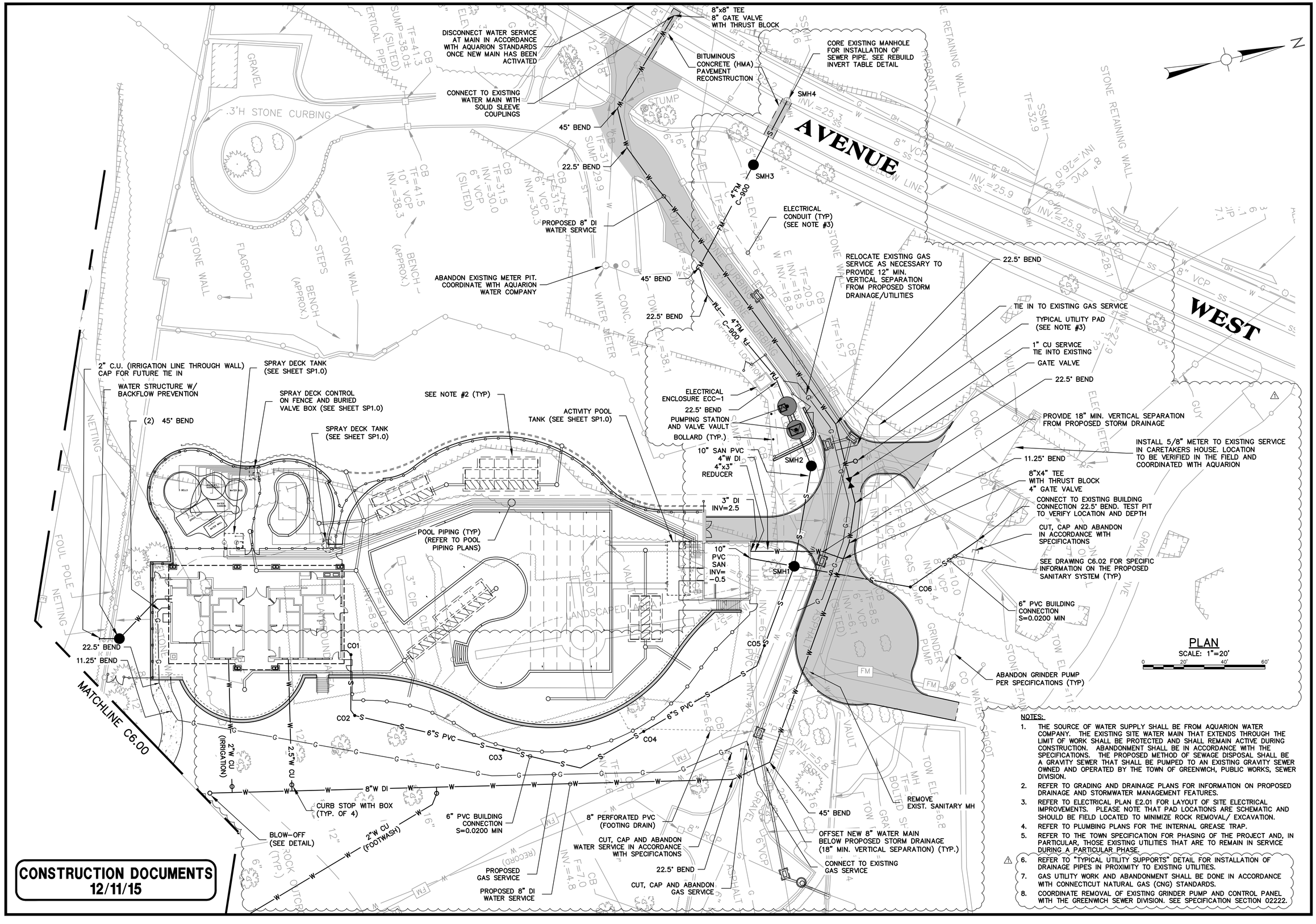

CONSTRUCTION DOCUMENTS
12/11/15

NOTES:

1. THE SOURCE OF WATER SUPPLY SHALL BE FROM AQUARION WATER COMPANY. THE EXISTING SITE WATER MAIN THAT EXTENDS THROUGH THE LIMIT OF WORK SHALL BE PROTECTED AND SHALL REMAIN ACTIVE DURING CONSTRUCTION. ABANDONMENT SHALL BE IN ACCORDANCE WITH THE SPECIFICATIONS. THE PROPOSED METHOD OF SEWAGE DISPOSAL SHALL BE A GRAVITY SEWER THAT SHALL BE PUMPED TO AN EXISTING GRAVITY SEWER OWNED AND OPERATED BY THE TOWN OF GREENWICH, PUBLIC WORKS, SEWER DIVISION.
2. REFER TO GRADING AND DRAINAGE PLANS FOR INFORMATION ON PROPOSED DRAINAGE AND STORMWATER MANAGEMENT FEATURES.
3. REFER TO ELECTRICAL PLAN E2.01 FOR LAYOUT OF SITE ELECTRICAL IMPROVEMENTS. PLEASE NOTE THAT PAD LOCATIONS ARE SCHEMATIC AND SHOULD BE FIELD LOCATED TO MINIMIZE ROCK REMOVAL/ EXCAVATION.
4. REFER TO PLUMBING PLANS FOR THE INTERNAL GREASE TRAP.
5. REFER TO THE TOWN SPECIFICATION FOR PHASING OF THE PROJECT AND, IN PARTICULAR, THOSE EXISTING UTILITIES THAT ARE TO REMAIN IN SERVICE DURING A PARTICULAR PHASE.
6. REFER TO "TYPICAL UTILITY SUPPORTS" DETAIL FOR INSTALLATION OF DRAINAGE PIPES IN PROXIMITY TO EXISTING UTILITIES.
7. GAS UTILITY WORK AND ABANDONMENT SHALL BE DONE IN ACCORDANCE WITH CONNECTICUT NATURAL GAS (CNG) STANDARDS.
8. COORDINATE REMOVAL OF EXISTING GRINDER PUMP AND CONTROL PANEL WITH THE GREENWICH SEWER DIVISION. SEE SPECIFICATION SECTION 02222.

Weston&Sampson®
273 Dividend Road, Rocky Hill, CT 06067
(860) 513-1473 (800) SAMPSON
www.westonandsampson.com

No.	Date	Dr.By	Ck.By	App.By	Description
1	03/03/16	LEC	JSP	CBW	ADDENDUM #1

APPROVED

REGISTERED PROFESSIONAL ENGINEER — DATE 03-07-16

TOWN OF GREENWICH – DEPARTMENT OF PUBLIC WORKS
RITCH AVENUE WEST, GREENWICH, CONNECTICUT
BYRAM PARK POOL REPLACEMENT

UTILITY PLAN–NORTH

CADD NO.	SCALE:	CONTRACT:	JOB NO.	DR.BY	DSN.BY	CHK.BY	APP.BY
GREENWICH	1"=20'	–	2130336	L.E.C.	L.E.C.	J.S.P.	C.B.W.

FILE NO. **C6.01**

SHEET – OF –

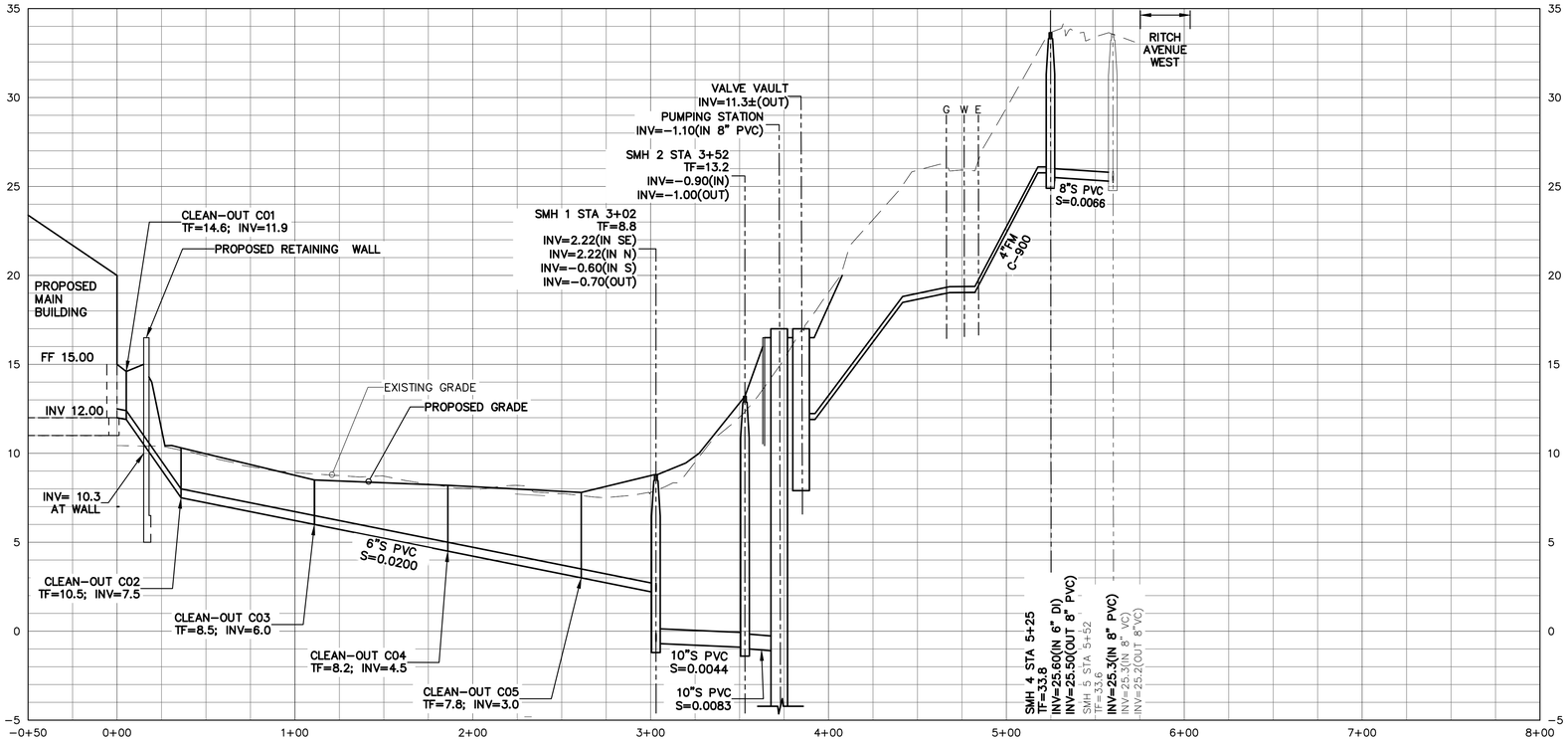

SEWER PROFILE

SCALE: 1"=40' HORZ, 1"=4' VERT

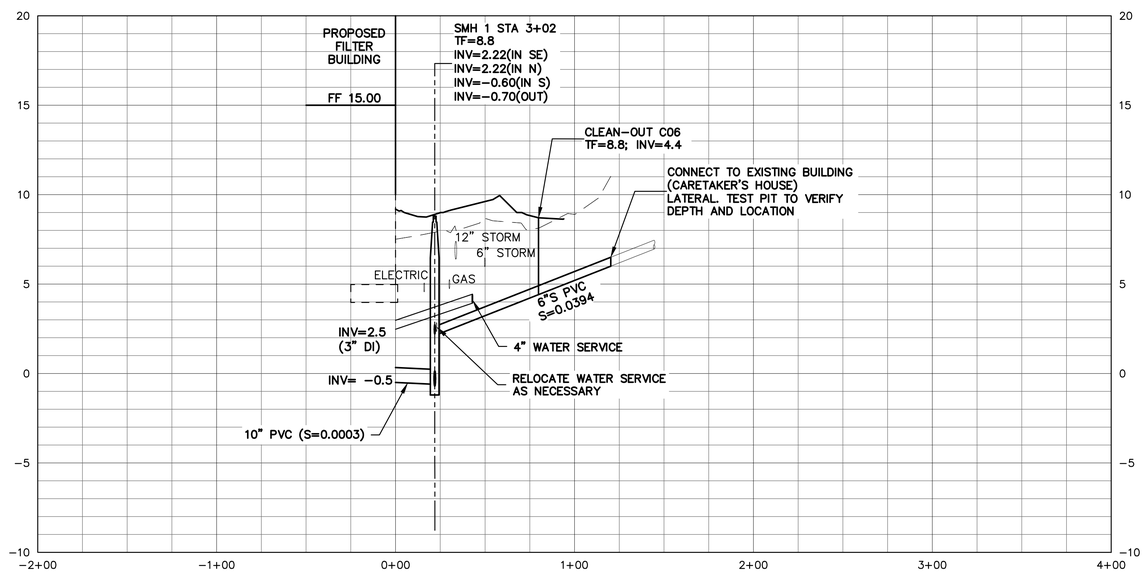

SEWER LATERALPROFILE (CARETAKER'S HOUSE)

SCALE: 1"=40' HORZ, 1"=4' VERT

CONSTRUCTION DOCUMENTS
12/11/15

Weston&Sampson®
273 Dividend Road, Rocky Hill, CT 06067
(860) 513-1473 (800) SAMPSON
www.westonandsampson.com

No.	Date	Dr.By	Ck.By	App.By	Description
1	03/03/16	LEC	JSP	CBW	ADDENDUM #1

APPROVED

REGISTERED PROFESSIONAL ENGINEER — DATE 03-07-16

TOWN OF GREENWICH – DEPARTMENT OF PUBLIC WORKS
RITCH AVENUE WEST, GREENWICH, CONNECTICUT
BYRAM PARK POOL REPLACEMENT

UTILITY PROFILE – NORTH

CADD NO.	SCALE:	CONTRACT:	JOB NO.	DR.BY	DSN.BY	CHK.BY	APP.BY
GREENWICH	AS NOTED	–	2130336	L.E.C.	L.E.C.	J.S.P.	C.B.W.

FILE NO. C6.02

SHEET – OF –

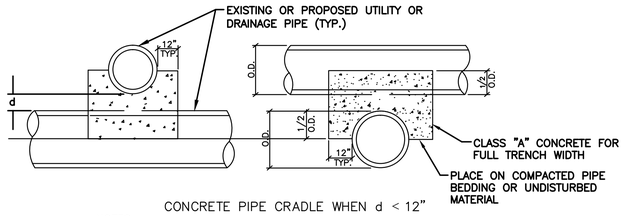

CONCRETE PIPE CRADLE WHEN d < 12"

NOTES:
1. d = DISTANCE BETWEEN UTILITY AND DRAINAGE PIPES.
2. SUPPORTS SHALL BE INSTALLED WHERE SPECIFIED ON THE PLANS AND WHERE DIRECTED BY THE ENGINEER.
3. CRUSHED STONE SUPPORTS SHALL BE INCLUDED IN THE COST OF THE PROPOSED UTILITY OR DRAINAGE PIPE AND CONCRETE PIPE CRADLES SHALL BE PAID FOR AS "MISCELLANEOUS CONCRETE".

TYPICAL UTILITY SUPPORTS

N.T.S

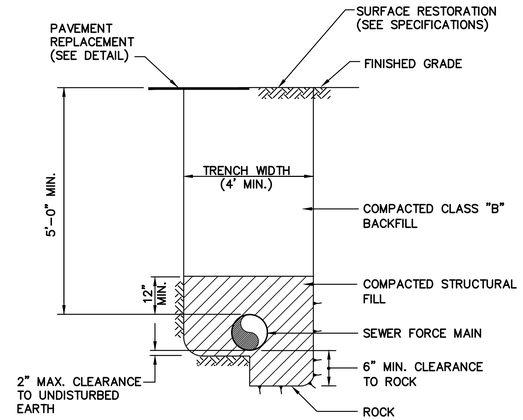

SEWER FORCE MAIN TRENCH DETAIL

N.T.S.

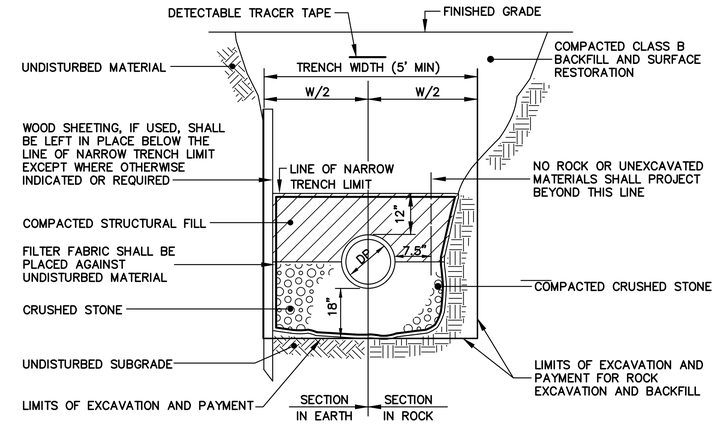

SANITARY GRAVITY SEWER TRENCH DETAIL

N.T.S.

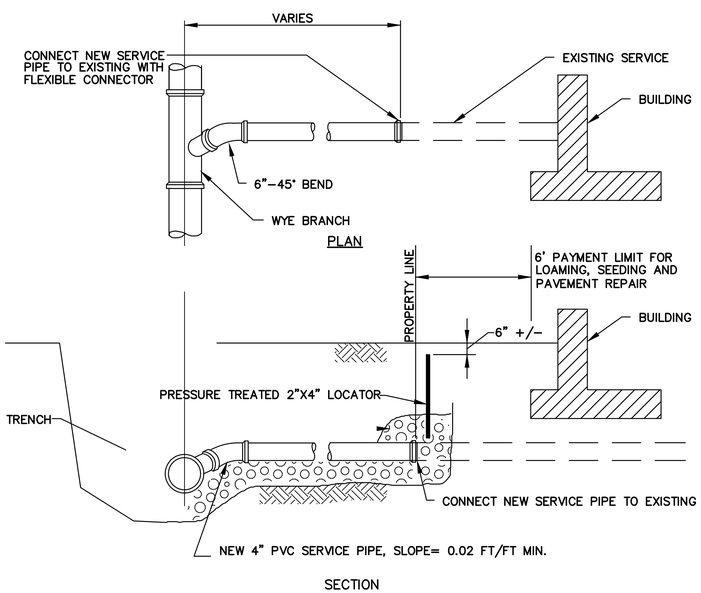

SEWER LATERAL CONNECTION

N.T.S

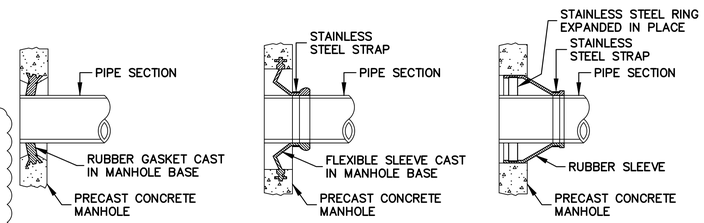

MANHOLE SEAL DETAILS

N.T.S.

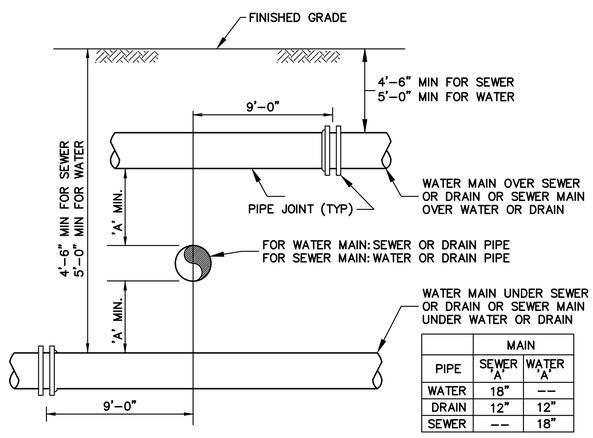

PIPE	MAIN SEWER 'A'	MAIN WATER 'A'
WATER	18"	--
DRAIN	12"	12"
SEWER	--	18"

WATER, SEWER OR DRAIN CROSSING DETAIL

N.T.S.

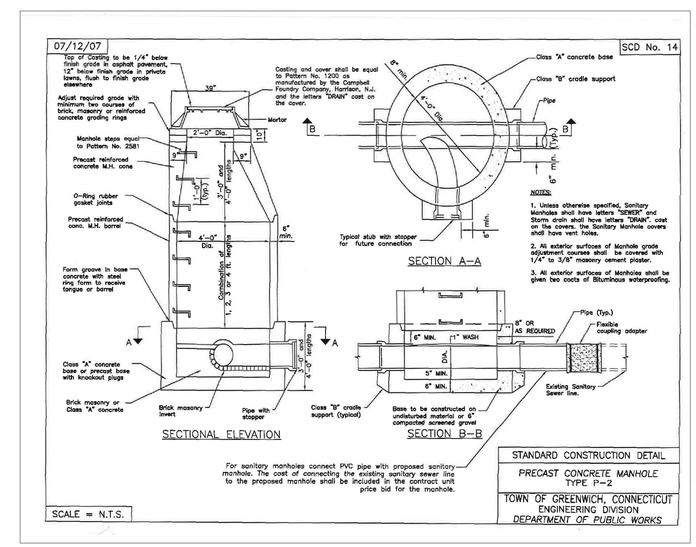

CONSTRUCTION DOCUMENTS
12/11/15

Weston&Sampson®
273 Dividend Road, Rocky Hill, CT 06067
(860) 513-1473 (800) SAMPSON
www.westonandsampson.com

No.	Date	Dr.By	Ck.By	App.By	Description
1	03/03/16	LEC	JSP	CBW	ADDENDUM #1

APPROVED

REGISTERED PROFESSIONAL ENGINEER — DATE 03-07-16

TOWN OF GREENWICH – DEPARTMENT OF PUBLIC WORKS
RITCH AVENUE WEST, GREENWICH, CONNECTICUT
BYRAM PARK POOL REPLACEMENT

SANITARY DETAILS

CADD NO.	SCALE:	CONTRACT:	JOB NO.	DR.BY	DSN.BY	CHK.BY	APP.BY
GREENWICH	NONE	–	2130336	L.E.C.	L.E.C.	J.S.P.	C.B.W.

D1.01

FILE NO.

SHEET – OF –

03/31/14 | SCD No. 507.10

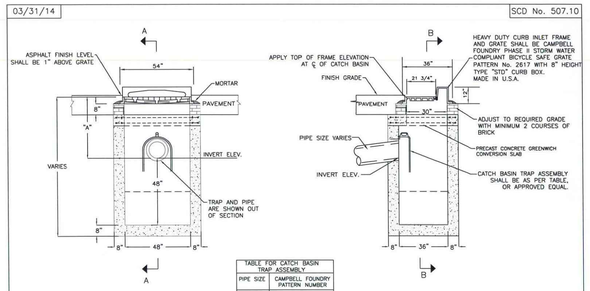

SECTIONAL ELEVATION B–B SECTIONAL ELEVATION A–A

TABLE FOR CATCH BASIN TRAP ASSEMBLY	
PIPE SIZE	CAMPBELL FOUNDRY PATTERN NUMBER
10"	2563
12"	2563
15"	2564
18"	2565

NOTES:

1. DIMENSION "A" SHALL BE CONSISTENT WITH THE INVERT ELEVATION SHOWN ON CONTRACT DRAWINGS. WHEN NO INVERT ELEVATION IS SPECIFIED, DIMENSION "A" SHALL BE ADEQUATE TO PROVIDE A MINIMUM OF 2'–0" OF COVER OVER PIPE.

SCALE = N.T.S.

STANDARD CONSTRUCTION DETAIL
TYPE "C–1" PRECAST CATCH BASIN
TOWN OF GREENWICH, CONNECTICUT
ENGINEERING DIVISION
DEPARTMENT OF PUBLIC WORKS

03/31/14 | SCD No. 507.14

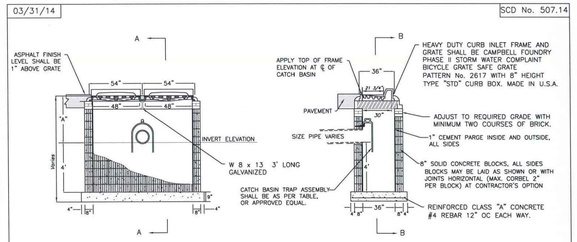

SECTIONAL ELEVATION B–B SECTIONAL ELEVATION A–A

NOTES:

1. DIMENSION "A" SHALL BE CONSISTENT WITH THE INVERT ELEVATION SHOWN ON CONTRACT DRAWINGS. WHEN NO INVERT ELEVATION IS SPECIFIED DIMENSION "A" SHALL BE ADEQUATE TO PROVIDE A MINIMUM OF 2'–0" OF COVER OVER PIPE.
2. INCREASE WALL THICKNESS TO 12" FOR THOSE PORTIONS OF WALL AT DEPTHS GREATER THAN 8 FEET. INSIDE DIMENSIONS TO REMAIN THE SAME, FOOTING SIZE TO BE INCREASED 8".
3. W BEAM TO BE INCLUDED IN UNIT PRICE FOR DOUBLE CATCH BASIN. CATCH BASIN MAY BE PRECAST. CONTRACTORS SHALL SUBMIT DETAILED PLANS SHOWING SECTIONS, JOINTS, REINFORCING AND OTHER PERTINENT INFORMATION FOR APPROVAL.

TABLE FOR CATCH BASIN TRAP ASSEMBLY	
PIPE SIZE	CAMPBELL FOUNDRY PATTERN NUMBER
10"	2563
12"	2563
15"	2564
18"	2565

SCALE = N.T.S.

STANDARD CONSTRUCTION DETAIL
DOUBLE TYPE "C–1" CONCRETE BLOCK CATCH BASIN
TOWN OF GREENWICH, CONNECTICUT
ENGINEERING DIVISION
DEPARTMENT OF PUBLIC WORKS

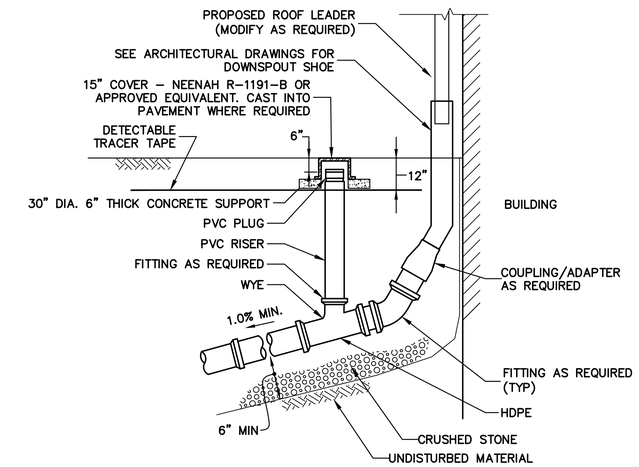

NOTES:

1. DETECTABLE TRACER TAPE TO BE INSTALLED FOR THE ENTIRE LENGTH OF THE ROOF LEADER EXTENSION.
2. PROVIDE FITTINGS, COUPLINGS AND ADAPTERS AS REQUIRED.
3. SEE PLAN FOR ROOF LEADER LOCATIONS

ROOF LEADER CONNECTION DETAIL

N.T.S.

03/31/14 | SCD No. 507.40

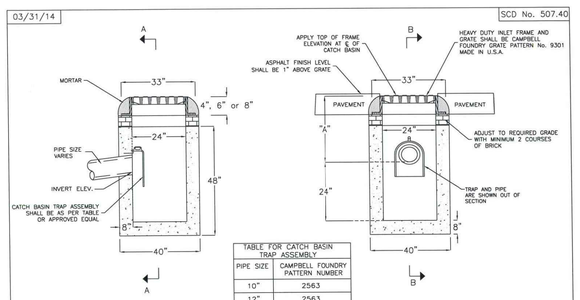

SECTIONAL ELEVATION B–B SECTIONAL ELEVATION A–A

TABLE FOR CATCH BASIN TRAP ASSEMBLY	
PIPE SIZE	CAMPBELL FOUNDRY PATTERN NUMBER
10"	2563
12"	2563
15"	2564
18"	2565

NOTES:

1. DIMENSION "A" SHALL BE CONSISTENT WITH THE INVERT ELEVATION SHOWN ON CONTRACT DRAWINGS. WHEN NO INVERT ELEVATION IS SPECIFIED, DIMENSION "A" SHALL BE ADEQUATE TO PROVIDE A MINIMUM OF 2'–0" OF COVER OVER PIPE.
2. THICKNESS OF FRAME (4", 6", OR 8") TO BE DETERMINED IN THE FIELD ACCORDING WITH FINISH GRADE ELEVATION.
3. 8" WALLS PRECAST CONCRETE UNIT AS MANUFACTURED BY PRECAST CONCRETE SALES CO. UPON REQUEST OR APPROVED EQUAL.

SCALE = N.T.S.

STANDARD CONSTRUCTION DETAIL
TYPE "C–4" PRECAST CATCH BASIN
TOWN OF GREENWICH, CONNECTICUT
ENGINEERING DIVISION
DEPARTMENT OF PUBLIC WORKS

04/XX/X | SCD No. 507.60

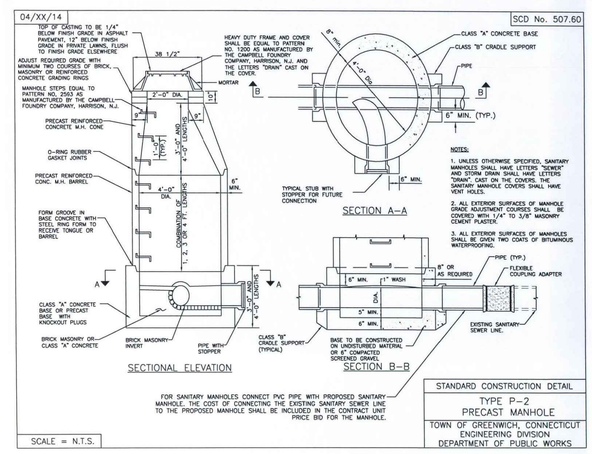

SECTIONAL ELEVATION SECTION A–A SECTION B–B

NOTES:

1. UNLESS OTHERWISE SPECIFIED, SANITARY MANHOLES SHALL HAVE LETTERS "SEWER" AND STORM DRAIN SHALL HAVE LETTERS "DRAIN", CAST ON THE COVERS. THE SANITARY MANHOLE COVERS SHALL HAVE VENT HOLES.
2. ALL EXTERIOR SURFACES OF MANHOLE GRADE ADJUSTMENT COURSES SHALL BE COVERED WITH 1/4" TO 3/8" MASONRY CEMENT PLASTER.
3. ALL EXTERIOR SURFACES OF MANHOLES SHALL BE GIVEN TWO COATS OF BITUMINOUS WATERPROOFING.

SCALE = N.T.S.

STANDARD CONSTRUCTION DETAIL
TYPE P–2 PRECAST MANHOLE
TOWN OF GREENWICH, CONNECTICUT
ENGINEERING DIVISION
DEPARTMENT OF PUBLIC WORKS

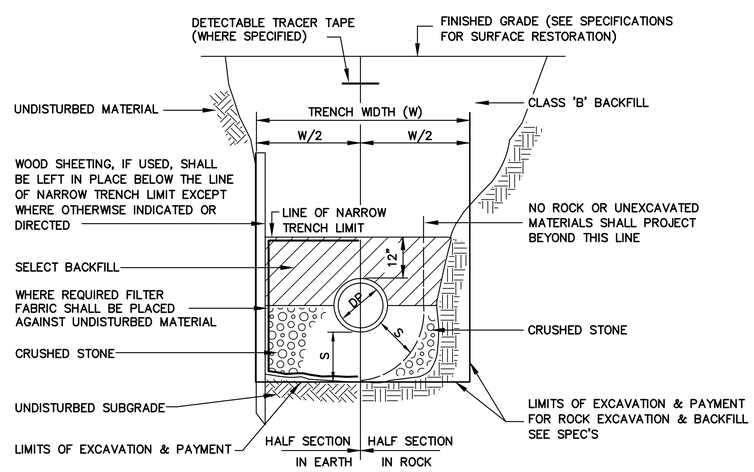

NOTE:
FOR W, DP, & S, SEE TABLE A

STORM DRAIN TRENCH DETAIL

N.T.S.

DEPTH TO INVERT	DIAMETER OF PIPE (DP)	MAXIMUM TRENCH WIDTH BELOW LINE OF NARROW TRENCH LIMIT (SHEETED OR UNSHEETED) (W)	MINIMUM CLEARANCE (S)
0–12'	TO 18"	5'	6"
0–12'	21"–24"	5'	7–1/2"
OVER 12'	TO 18"	7'	6"
OVER 12'	21"–24"	7'	7–1/2"

TABLE A

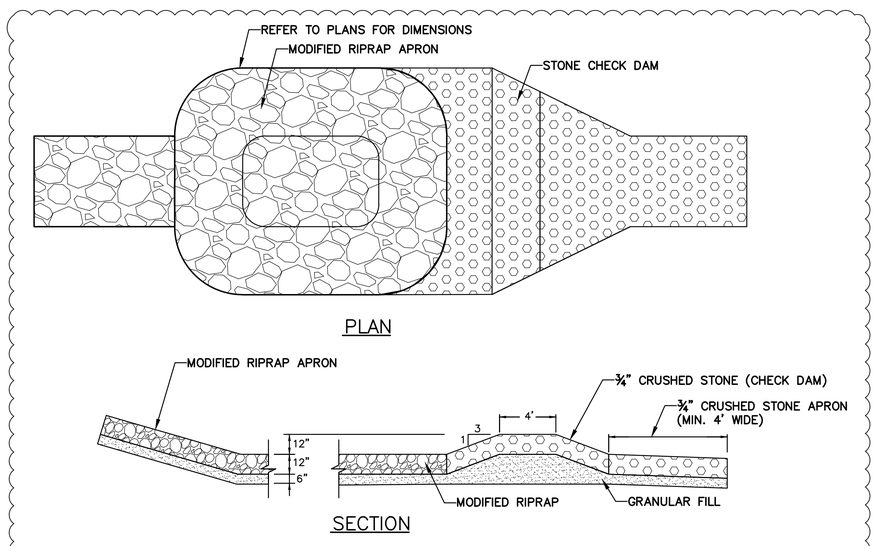

⚠ PRE–TREATMENT SEDIMENT FOREBAY DETAIL

N.T.S

03/31/14 | SCD No. 507.20

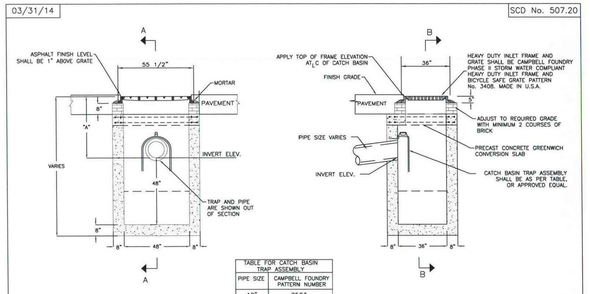

SECTIONAL ELEVATION B–B SECTIONAL ELEVATION A–A

TABLE FOR CATCH BASIN TRAP ASSEMBLY	
PIPE SIZE	CAMPBELL FOUNDRY PATTERN NUMBER
10"	2563
12"	2563
15"	2564
18"	2565

NOTES:

1. DIMENSION "A" SHALL BE CONSISTENT WITH THE INVERT ELEVATION SHOWN ON CONTRACT DRAWINGS. WHEN NO INVERT ELEVATION IS SPECIFIED, DIMENSION "A" SHALL BE ADEQUATE TO PROVIDE A MINIMUM OF 2'–0" OF COVER OVER PIPE.

SCALE = N.T.S.

STANDARD CONSTRUCTION DETAIL
TYPE "C–1" PRECAST CATCH BASIN
TOWN OF GREENWICH, CONNECTICUT
ENGINEERING DIVISION
DEPARTMENT OF PUBLIC WORKS

CONSTRUCTION DOCUMENTS
12/11/15

Weston&Sampson®
273 Dividend Road, Rocky Hill, CT 06067
(860) 513-1473 (800) SAMPSON
www.westonandsampson.com

No.	Date	Dr.By	Ck.By	App.By	Description
1	03/03/16	LEC	JSP	CBW	ADDENDUM #1

APPROVED ISSUED FOR CONSTRUCTION

REGISTERED PROFESSIONAL ENGINEER 03–07–16 DATE

STATE OF CONNECTICUT REGISTERED PROFESSIONAL ENGINEER CHRISTOPHER B. WESTER No. 17,076

TOWN OF GREENWICH – DEPARTMENT OF PUBLIC WORKS
RITCH AVENUE WEST, GREENWICH, CONNECTICUT
BYRAM PARK POOL REPLACEMENT

DRAINAGE DETAILS

CADD NO.	SCALE:	CONTRACT:	JOB NO.	DR.BY	DSN.BY	CHK.BY	APP.BY
GREENWICH	NONE	–	2130336	L.E.C.	L.E.C.	J.S.P.	C.B.W.

FILE NO. D1.04

SHEET – OF –

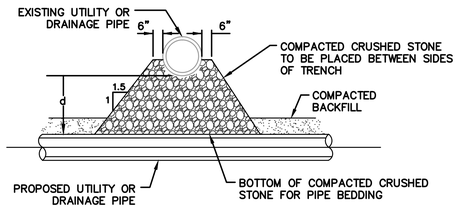

CRUSHED STONE SUPPORT WHEN d ≥12"

N.T.S.

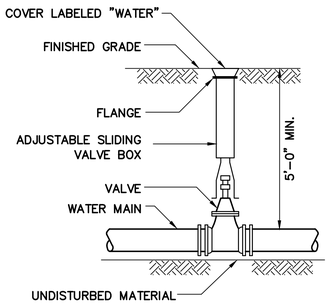

VALVE AND BOX DETAIL

N.T.S.

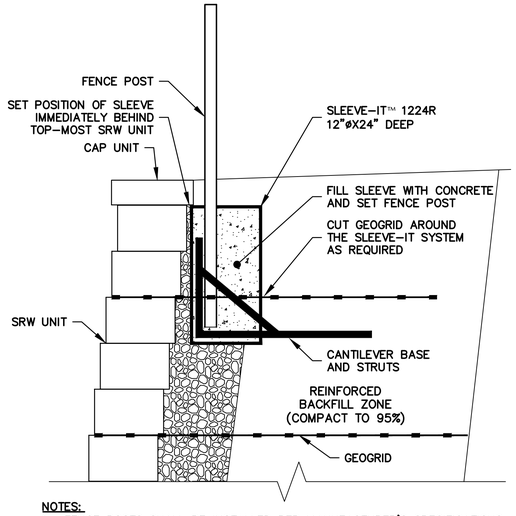

NOTES:
1. FENCE POSTS SHALL BE INSTALLED PER MANUFACTURER'S SPECIFICATIONS.
2. SEE "MODULAR CONCRETE RETAINING WALL" (THIS SHEET) DETAIL FOR ADDITIONAL INFORMATION.

FENCE POST INSTALLATION AT RETAINING WALL

N.T.S.

GEOGRID PLACEMENT TABLE

EXPOSED WALL HEIGHT	NUMBER REQUIRED	PLACEMENT ELEVATION	GRID LENGTH
3.0'	1	1.34'	5.5'
4.3'	2	1.34', 3.34'	4.0', 7.0'
5.7'	2	2.00', 4.00'	5.0', 6.5'
7.0'	3	1.34', 3.34', 5.34'	4.0', 5.0', 7.5'
8.3'	4	0.67', 2.67', 4.67', 6.67'	6.5', 6.5', 6.5', 8.5'
10.0'	5	0.67', 2.67', 4.67', 6.67', 8.87'	7.0', 7.0', 7.0', 7.5', 10.5'

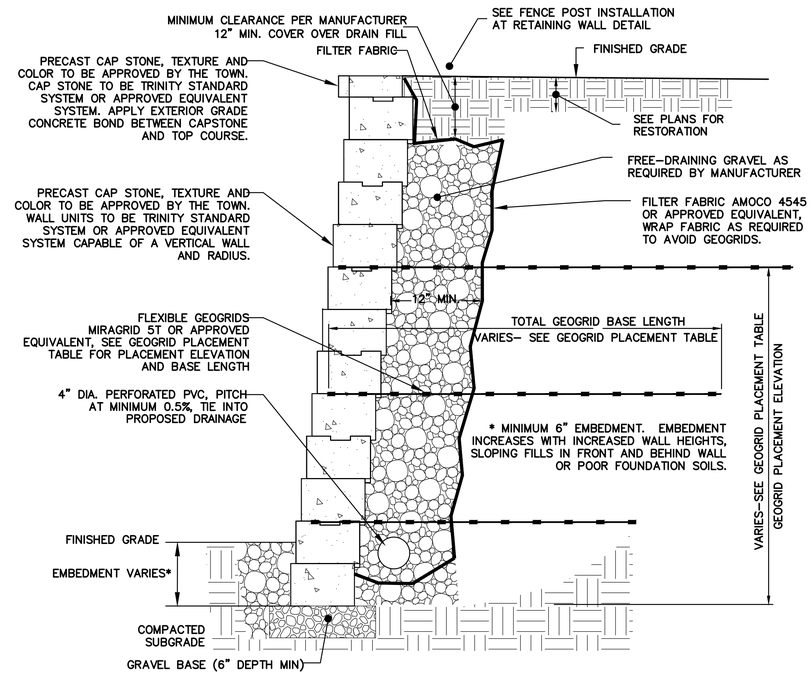

NOTES:
1. PRECAST CAP STONE, TEXTURE AND COLOR TO BE APPROVED BY THE TOWN.
2. WALL TO BE INSTALLED PER MANUFACTURER'S SPECIFICATIONS (EARTH REINFORCEMENT TECHNOLOGIES OR APPROVED ALTERNATE MODULAR RETAINING WALL SYSTEM).
3. GEOGRID TO BE USED AS REQUIRED FOR INSTALLATION.

SEGMENTAL CONCRETE RETAINING WALL

N.T.S.

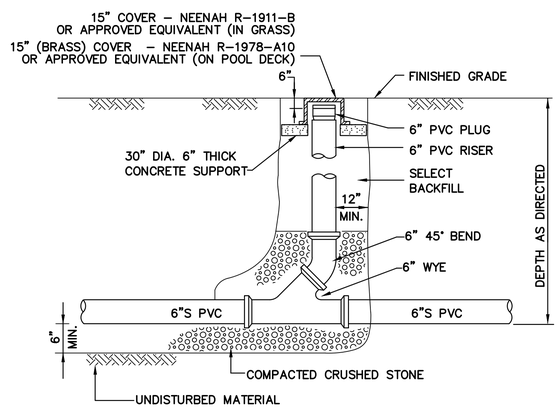

SEWER LATERAL CLEANOUT DETAIL

N.T.S.

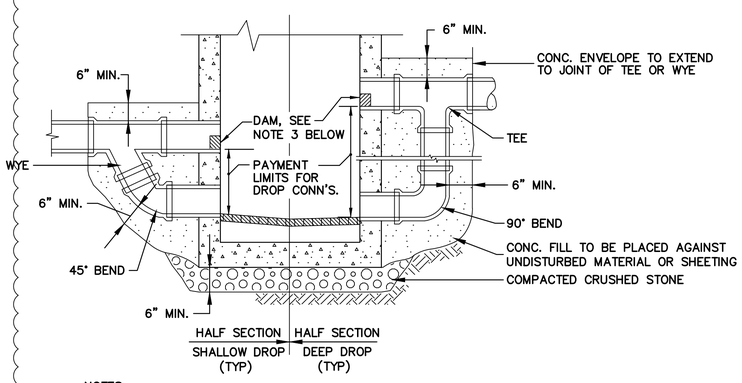

NOTES:
1. DROP PIPE TO BE SAME DIAMETER AS SEWER DISCHARGE INTO MANHOLE UNLESS OTHERWISE SHOWN ON DRAWINGS.
2. DIMENSIONS & CONSTRUCTION OF DROP MANHOLE TO BE SIMILAR TO TYPICAL MANHOLE EXCEPT AS SHOWN.
3. FOR PVC PIPE, EPOXY HALF PLUG TO PIPE. FOR DI, VC AND RC PIPE, MORTAR AND BRICK IN PIPE.

DROP CONNECTION DETAIL

N.T.S.

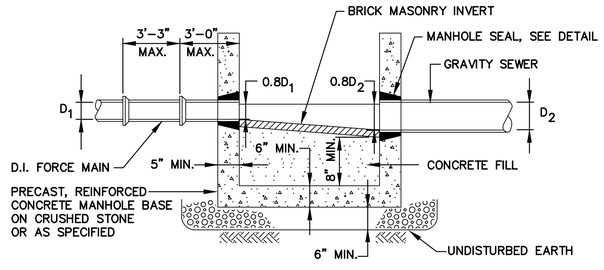

TYPICAL FORCE MAIN CONNECTION TO MANHOLE DETAIL

N.T.S.

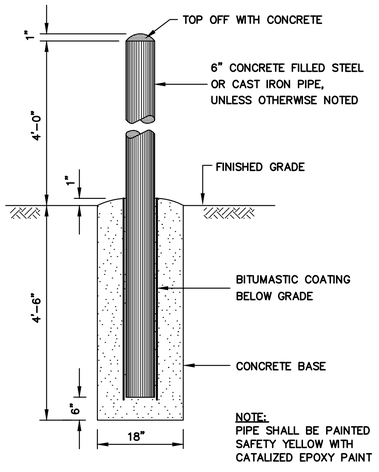

NOTE:
PIPE SHALL BE PAINTED SAFETY YELLOW WITH CATALIZED EPOXY PAINT

BOLLARD DETAIL

N.T.S.

CONSTRUCTION DOCUMENTS
12/11/15

Weston&Sampson®
273 Dividend Road, Rocky Hill, CT 06067
(860) 513-1473 (800) SAMPSON
www.westonandsampson.com

No.	Date	Dr.By	Ck.By	App.By	Description
1	03/03/16	LEC	JSP	CBW	ADDENDUM #1

APPROVED

REGISTERED PROFESSIONAL ENGINEER — DATE 03-07-16

TOWN OF GREENWICH – DEPARTMENT OF PUBLIC WORKS
RITCH AVENUE WEST, GREENWICH, CONNECTICUT
BYRAM PARK POOL REPLACEMENT
MISCELLANEOUS DETAILS

CADD NO.	SCALE:	CONTRACT:	JOB NO.	DR.BY	DSN.BY	CHK.BY	APP.BY
GREENWICH	NONE	–	2130336	L.E.C.	L.E.C.	J.S.P.	C.B.W.

D1.08

FILE NO.

SHEET – OF –

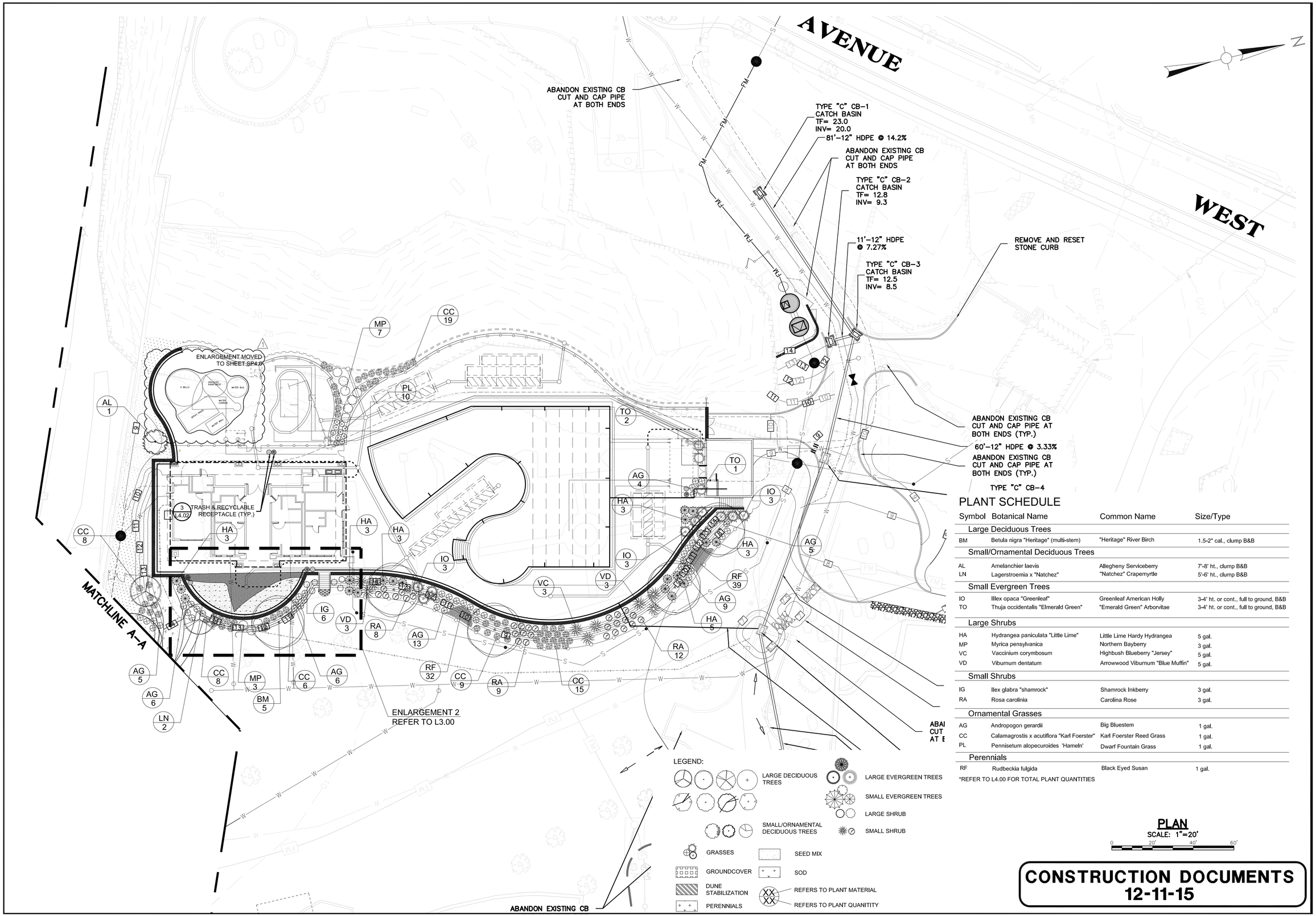

PLANT SCHEDULE

Symbol	Botanical Name	Common Name	Size/Type
Large Deciduous Trees			
BM	Betula nigra "Heritage" (multi-stem)	"Heritage" River Birch	1.5-2" cal., clump B&B
Small/Ornamental Deciduous Trees			
AL	Amelanchier laevis	Allegheny Serviceberry	7'-8' ht., clump B&B
LN	Lagerstroemia x "Natchez"	"Natchez" Crapemyrtle	5'-6' ht., clump B&B
Small Evergreen Trees			
IO	Ilex opaca "Greenleaf"	Greenleaf American Holly	3-4' ht. or cont., full to ground, B&B
TO	Thuja occidentalis "Elmerald Green"	"Emerald Green" Arborvitae	3-4' ht. or cont., full to ground, B&B
Large Shrubs			
HA	Hydrangea paniculata "Little Lime"	Little Lime Hardy Hydrangea	5 gal.
MP	Myrica pensylvanica	Northern Bayberry	3 gal.
VC	Vaccinium corymbosum	Highbush Blueberry "Jersey"	5 gal.
VD	Viburnum dentatum	Arrowwood Viburnum "Blue Muffin"	5 gal.
Small Shrubs			
IG	Ilex glabra "shamrock"	Shamrock Inkberry	3 gal.
RA	Rosa carolinia	Carolina Rose	3 gal.
Ornamental Grasses			
AG	Andropogon gerardii	Big Bluestem	1 gal.
CC	Calamagrostis x acutiflora "Karl Foerster"	Karl Foerster Reed Grass	1 gal.
PL	Pennisetum alopecuroides 'Hameln'	Dwarf Fountain Grass	1 gal.
Perennials			
RF	Rudbeckia fulgida	Black Eyed Susan	1 gal.

*REFER TO L4.00 FOR TOTAL PLANT QUANTITIES

PLAN
SCALE: 1"=20'
0 20' 40' 60'

CONSTRUCTION DOCUMENTS
12-11-15

Weston&Sampson®
273 Dividend Road, Rocky Hill, CT 06067
(860) 513-1473 (800) SAMPSON
www.westonandsampson.com

No.	Date	Dr.By	Ck.By	App.By	Description
1	03/03/16	JWG	JSP	DPB	ADDENDUM #1

APPROVED
03-03-2016
DATE
REGISTERED LANDSCAPE ARCHITECT

STATE OF CONNECTICUT REGISTERED LICENSED LANDSCAPE ARCHITECT

TOWN OF GREENWICH – DEPARTMENT OF PUBLIC WORKS
RITCH AVENUE WEST, GREENWICH, CONNECTICUT
BYRAM PARK POOL REPLACEMENT
LANDSCAPE/HARDSCAPE PLAN–NORTH

CADD NO.	SCALE:	CONTRACT:	JOB NO.	DR.BY	DSN.BY	CHK.BY	APP.BY
GREENWICH	1"=20'	–	2130336	J.W.G.	J.W.G.	J.S.P.	D.P.B.

L2.01
FILE NO.
SHEET – OF –

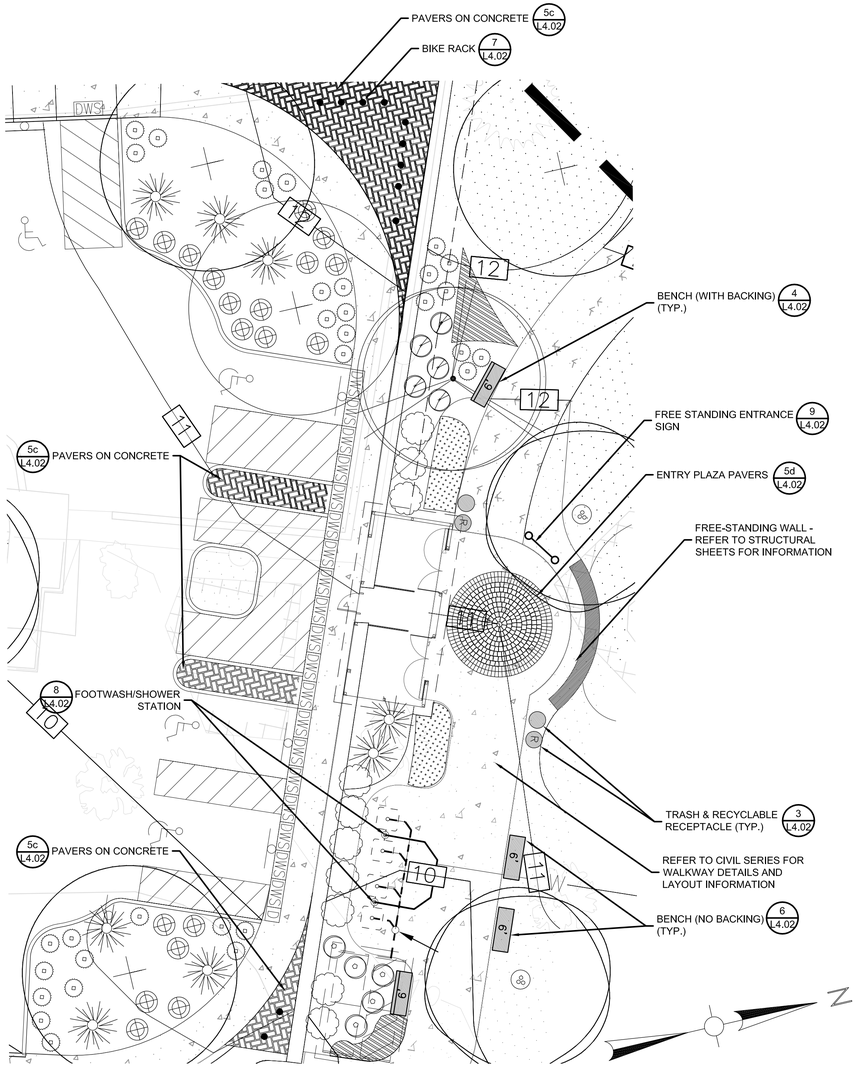

1 ENLARGEMENT 1 - ENTRY PLAZA
1"=10'

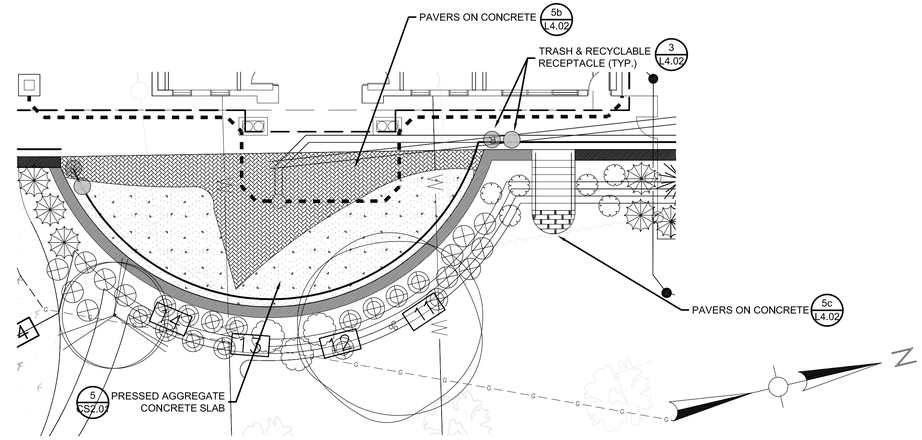

2 ENLARGEMENT 2 - POOL HOUSE PLAZA
1"=10'

ENLARGEMENT MOVED TO SHEET SP4.0

CONSTRUCTION DOCUMENTS
12-11-15

Weston&Sampson®
273 Dividend Road, Rocky Hill, CT 06067
(860) 513-1473 (800) SAMPSON
www.westonandsampson.com

No.	Date	Dr.By	Ck.By	App.By	Description
1	03/03/16	JWG	JSP	DPB	ADDENDUM #1

APPROVED
03-03-2016
DATE
REGISTERED LANDSCAPE ARCHITECT

TOWN OF GREENWICH – DEPARTMENT OF PUBLIC WORKS
RITCH AVENUE WEST, GREENWICH, CONNECTICUT
BYRAM PARK POOL REPLACEMENT

HARDSCAPE & AMENITIES PLAN–SOUTH

CADD NO.	SCALE:	CONTRACT:	JOB NO.	DR.BY	DSN.BY	CHK.BY	APP.BY
GREENWICH	1"=10'	–	2130336	J.W.G.	J.W.G.	J.S.P.	D.P.B.

L3.00

FILE NO.

SHEET – OF –

GENERAL NOTES

A. CODE AND STANDARDS:
THE FOLLOWING CODE AND STANDARDS AND ALL REFERENCE STANDARDS THERE IN SHALL APPLY TO THE DESIGN, CONSTRUCTION AND QUALITY CONTROL OF ALL WORK PERFORMED ON THE PROJECT. USE THE LATEST EDITIONS UNLESS NOTED OTHERWISE. SAFETY AND CONSTRUCTION MEANS AND METHODS ARE THE SOLE RESPONSIBILITY OF THE CONTRACTOR.
1. 2005 STATE BUILDING CODE, STATE OF CONNECTICUT WITH THE 2009, 2011 AND 2013 AMENDMENTS.
2. INTERNATIONAL BUILDING CODE 2003
3. MINIMUM DESIGN LOADS FOR BUILDINGS AND OTHER STRUCTURES (SEI/ASCE 7-02), AMERICAN SOCIETY OF CIVIL ENGINEERS.
4. AMERICAN CONCRETE INSTITUTE (ACI)

B. DESIGN DATA:
1. EARTH LOADS
A. ACTIVE SOIL PRESSURE 40 PCF EQUIVALENT FLUID PRESSURE
B. PASSIVE SOIL PRESSURE 0 PSF
C. CONSTRUCTION LOADS 3 FEET OF EARTH PRESSURE

C. FOUNDATION GEOTECHNICAL REPORT:
1. FOUNDATIONS HAVE BEEN DESIGNED IN ACCORDANCE WITH THE GEOTECHNICAL REPORT PREPARED BY WESTON & SAMPSON DATED JULY 15, 2014.
2. ALL FOUNDATIONS SUSCEPTIBLE TO FROST SHALL BEAR A MINIMUM 3'-6" BELOW GRADE. IN CASE OF CONFLICT, NOTIFY THE STRUCTURAL ENGINEER IN ADVANCE OF ANY CONSTRUCTION TO ALLOW FOR ADJUSTMENT.
3. FOUNDATION TO BE PLACED ON NATIVE MEDIUM DENSE SAND AND GRAVEL AND/OR SILTY SAND DEPOSITS OR ON PROPERLY CONSTRUCTED COMPACT GRANULAR FILL HAVE BEEN DESIGNED USING AN ALLOWABLE BEARING PRESSURE OF 5000 PSF.

D. MATERIALS:
THE FOLLOWING ASTM STANDARDS AND DESIGN STRESSES SHALL BE USED FOR THE APPROPRIATE MATERIALS USED IN CONSTRUCTION OF THIS PROJECT,
1. CEMENT: ASTM C150 TYPE II
2. CONCRETE: ALL SITE CONCRETE SHALL BE NORMAL WEIGHT CONCRETE

APPLICATION	F'C @ 28 DAYS (PSI)
RETAINING WALL	4000
SLAB-ON-GRADE	4000
MECH./ELEC. EQUIPMENT PADS	4000

3. REINFORCEMENT: DEFORMED REINFORCING STEEL BARS- GRADE 60
4. STONE MASONRY UNITS: MORTAR - ASTM C270: TYPE S

E. CONSTRUCTION:
1. GENERAL
A. IN CASE OF CONFLICTS BETWEEN GENERAL NOTES, DETAILS AND SPECIFICATIONS, THE MOST STRINGENT REQUIREMENTS SHALL GOVERN.
B. TYPICAL DETAILS APPLY REPETITIVELY ON THE PROJECT. CONTRACTOR SHALL COORDINATE THE GENERAL REQUIREMENTS OF TYPICAL DETAILS WITH PROJECT CONDITIONS PLANS, SPECIFICATIONS AND SECTIONS.
C. THE REPRODUCTION OF ANY PORTION OF THE STRUCTURAL CONTRACT DRAWINGS FOR RESUBMITTAL AS SHOP DRAWINGS PRODUCED IN SUCH A MANNER WILL BE REJECTED AND RETURNED.
D. IMPLEMENTING JOB SITE SAFETY AND CONSTRUCTION PROCEDURES, TEMPORARY SHORING AND BRACING OF EXISTING CONSTRUCTION ARE THE SOLE RESPONSIBILITY OF THE CONTRACTOR.
E. CONTRACTOR SHALL COORDINATE WITH ALL ARCHITECTURAL, MECHANICAL, PLUMBING, ELECTRICAL AND CIVIL SITE DRAWINGS FOR SIZE AND LOCATIONS OF OPENINGS, SLEEVES, CONCRETE EQUIPMENT PADS AND INSERTS.

F. FOUNDATIONS & STRUCTURAL EARTHWORK:
1. GENERAL
A. SEE THE SPECIFICATIONS AND GEOTECHINCAL REPORT REQUIREMENTS AND SLAB-ON-GRADE SUBGRADE INCLUDING COMPACTION PROCEDURES.
B. ALL FOUNDATIONS SHALL BE PLACED AND COMPACTED GRANULAR FILL MATERIAL OR CONSOLIDATED EXISTING MATERIALS BEARING ELEVATIONS ARE ESTIMATED FROM SOIL BORING DATA INDICATED IN THE GEOTECHNICAL REPORT. DETERMINE FINAL BEARING ELEVATIONS AND FIELD VERIFICATION OF ALLOWABLE BEARING PRESSURE SHALL BE MADE BY AN EXPERIENCED, QUALIFIED GEOTECHNICAL ENGINEER PRIOR TO PLACING FOUNDATIONS.
C. CONCRETE SHALL BE PLACED ON SAME DAY SUBSURFACE APPROVAL IS GIVEN.
D. UTILITY LINES SHALL NOT BE PLACED THROUGH OR BELOW FOUNDATIONS WITHOUT THE STRUCTURAL ENGINEER'S APPROVAL.
E. ALL SHORING, SHEETING AND DEWATERING SHALL BE THE TOTAL RESPONSIBILITY OF THE CONTRACTOR. SHEETING AND SHORING SHALL BE DESIGNED BY THE CONTRACTOR'S ENGINEER REGISTERED IN THE STATE OF CONNECTICUT. ALL SUBMITTALS SHALL BEAR CONTRACTOR'S ENGINEER'S SEAL AND SIGNATURE.
2. BACKFILL
A. WHERE FINAL GRADE ELEVATIONS ARE APPROXIMATELY EQUAL ON BOTH SIDES OF A WALL, BACKFILL IN LIFTS TO MAINTAIN LEVEL ELEVATIONS WITHIN 12" ON BOTH SIDES AT ANY TIME.

G. CONCRETE:
1. CAST-IN-PLACE:
A. REINFORCING STEEL CLEAR COVER SHALL BE AS FOLLOWS UNLESS NOTED OTHERWISE:

CONCRETE CAST IN PLACE AND PERMANENTLY EXPOSED TO EARTH: 3"
CONCRETE EXPOSED TO EARTH AND WEATHER: 2"

B. CONSTRUCTION JOINTS AND CONTRACTION JOINTS IN SLAB ON GRADE SHALL BE ARRANGED TO LIMIT MAXIMUM AREA BETWEEN JOINTS TO 400 S.F. APPROXIMATELY SQUARE, ALLOW A MINIMUM OF 48 HOURS TIME BETWEEN PLACEMENT OF ADJACENT SECTIONS. SUBMIT JOINT LOCATIONS AND DETAILS FOR APPROVAL.

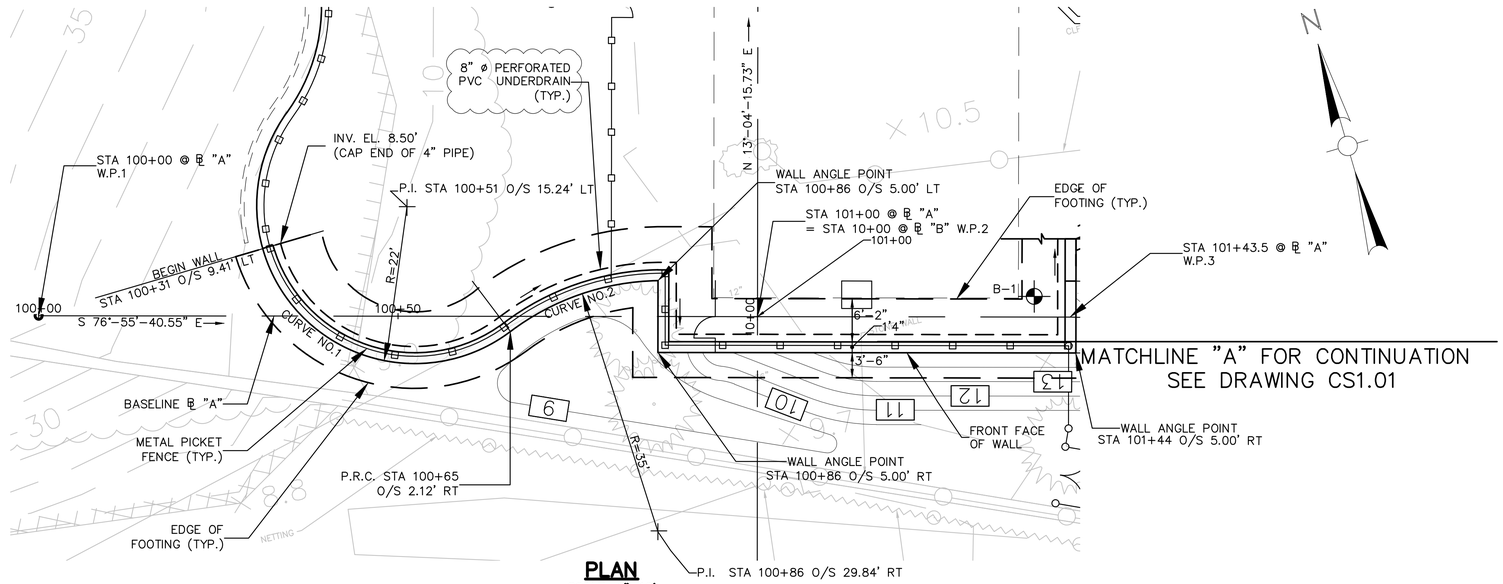

PLAN
SCALE: 1"=10'

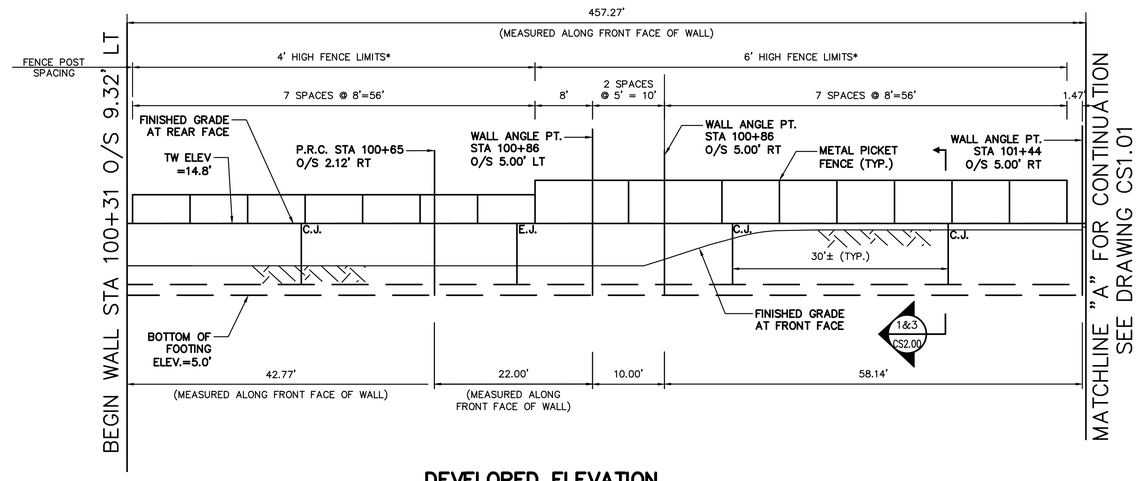

DEVELOPED ELEVATION
SCALE: 1"=10'

*FOR ADDITIONAL FENCE DETAILS SEE DRAWINGS CS2.00, CS2.01 & D1.07

WORKING POINT NOS. (W.P.)	COORDINATES	
	N	E
1	563877.59	752690.25
2	563854.97	752787.66
3	563845.13	752830.03
4	564147.11	752855.52

CURVE DATA	R	Δ	L
1	22ft	111°-23'-17.7"	42.77ft
2	35ft	36°-10'-41.5"	22.10ft

GENERAL NOTES CONTINUED.

C. ALL INSERTS AND SLEEVES SHALL BE CAST IN PLACE WHENEVER FEASIBLE. NO SLEEVE SHALL BE PLACED THROUGH ANY CONCRETE ELEMENT UNLESS AUTHORIZED BY THE STRUCTURAL DRAWINGS, APPROVED SLEEVING SUBMITTAL OR SPECIFICALLY AUTHORIZED IN WRITING BY THE STRUCTURAL ENGINEER.
D. CORE DRILLING SHALL NOT BE PERMITTED UNLESS AUTHORIZED IN WRITING BY THE STRUCTURAL ENGINEER.
E. SPLICES OF REINFORCING STEEL BARS SHALL BE AS DETAILED ON THE APPROVED PLACEMENT DRAWINGS OR AS AUTHORIZED BY THE STRUCTURAL ENGINEER. WHEN PERMITTED, SPLICES SHALL BE MADE BY CONTACT TENSION LAP SPLICE, UNLESS NOTED OTHERWISE.
F. ACTUAL SLAB THICKNESS MAY VARY DUE TO SUB GRADE PREPARATION. CONTRACTOR SHALL PROVIDE ADDITIONAL CONCRETE NECESSARY TO MAINTAIN A LEVEL SLAB SURFACE AT THE ELEVATIONS INDICATED.
G. DO NOT PLACE ANY TYPE OF CONDUITS/PIPES IN STRUCTURAL SLAB-ON-GRADE.
H. NO WELDING OF REINFORCING STEEL BARS SHALL BE PERMITTED UNLESS SPECIFICALLY CALLED FOR OR APPROVED BY THE STRUCTURAL ENGINEER.
I. SUBMIT MATERIAL TEST REPORTS FROM A QUALIFIED TESTING AGENCY DEMONSTRATING THAT THE TEST RESULTS FOR TRIAL MIX BATCHES FOR EACH CONCRETE MIX DESIGN COMPLY WITH ACI-301 AND THE ADDITIONAL REQUIREMENTS OF THE PROJECT CONTRACT DOCUMENTS.

REFERENCE NOTES:

1. C.J. - INDICATES CONTRACTION JOINT SEE DRAWING CS2.00
2. E.J. - INDICATES EXPANSION JOINT SEE DRAWING CS2.00
3. FOR TYPICAL WALL SECTION SEE DRAWING CS2.00
4. FOR TYPICAL MASONRY STONE FACING SEE DRAWING CS2.00
5. FOR CONCRETE SLAB DETAILS SEE DRAWING CS2.01
6. ✦ DENOTES BORING LOCATIONS

CONSTRUCTION DOCUMENTS
12/11/15

Weston&Sampson®
273 Dividend Road, Rocky Hill, CT 06067
(860) 513-1473 (800) SAMPSON
www.westonandsampson.com

No.	Date	Dr.By	Ck.By	App.By	Description	
1	03/03/16	LEC	JSP	CBW	ADDENDUM #1	
		A	P	R	O V E D	03-07-16 DATE

REGISTERED PROFESSIONAL ENGINEER

STATE OF CONNECTICUT ★ PETER J. GRANDY ★ No. 15495 ★ LICENSED PROFESSIONAL ENGINEER

TOWN OF GREENWICH - DEPARTMENT OF PUBLIC WORKS
RITCH AVENUE WEST, GREENWICH, CONNECTICUT
BYRAM PARK POOL REPLACEMENT
STRUCTURAL DETAILS

CADD NO.	SCALE:	CONTRACT:	JOB NO.	DR.BY	DSN.BY	CHK.BY	APP.BY
GREENWICH	AS SHOWN	-	2130336	L.E.C.	P.J.G.	P.J.G.	C.B.W.

FILE NO.

CS1.00

SHEET - OF -

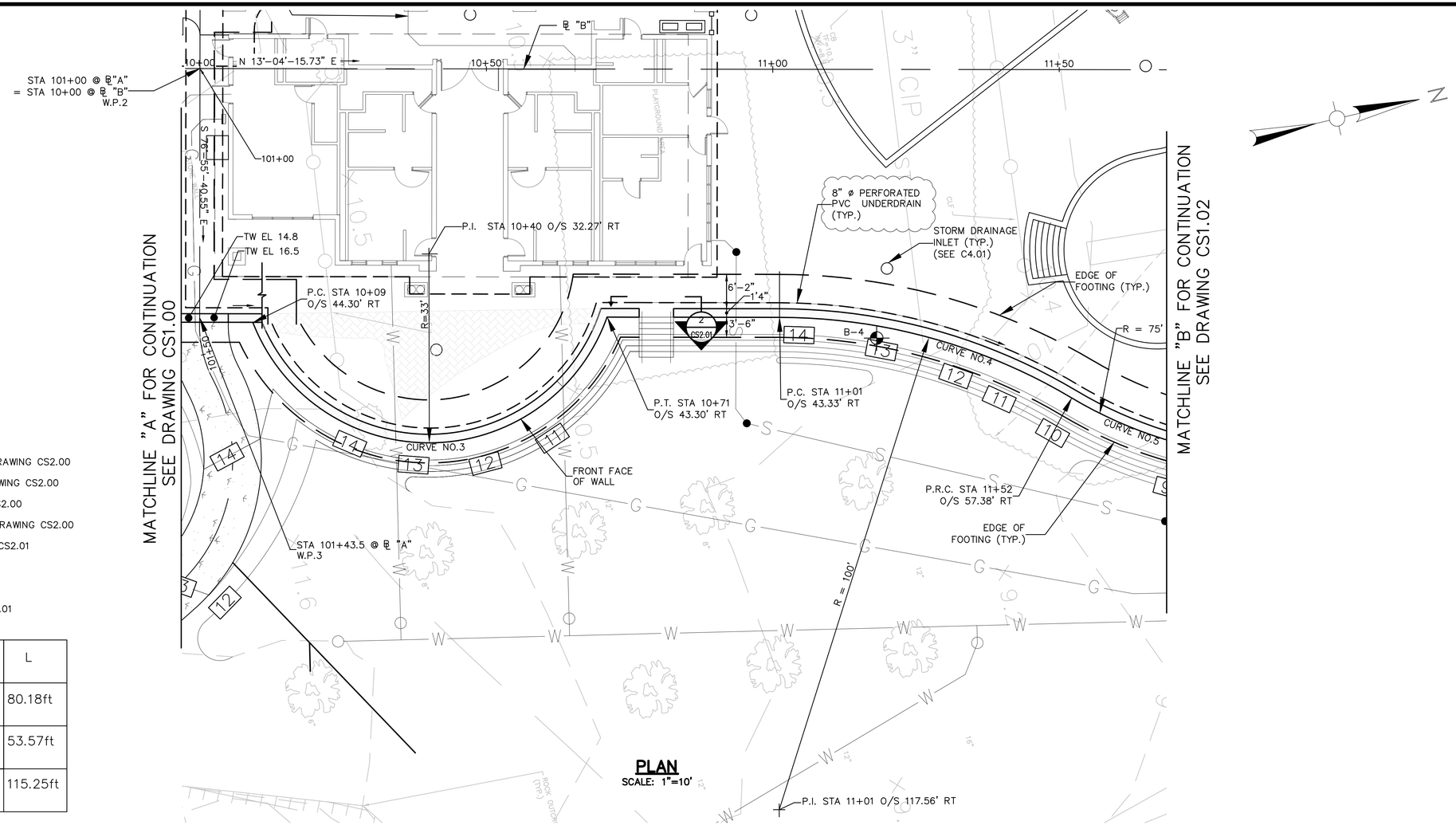

REFERENCE NOTES:

1. C.J. – INDICATES CONTRACTION JOINT SEE DRAWING CS2.00
2. E.J. – INDICATES EXPANSION JOINT SEE DRAWING CS2.00
3. FOR TYPICAL WALL SECTION SEE DRAWING CS2.00
4. FOR TYPICAL MASONRY STONE FACING SEE DRAWING CS2.00
5. FOR CONCRETE SLAB DETAILS SEE DRAWING CS2.01
6. FOR GENERAL NOTES SEE DRAWING CS1.00
7. FOR STAIR DETAILS SEE DRAWING CS2.01
8. FOR TYPICAL PIPE SLEEVE SEE DRAWING CS2.01

CURVE DATA	R	Δ	L
3	33ft	139°-12'-08.2"	80.18ft
4	100ft	30°-41'-36.1"	53.57ft
5	75ft	88°-02'-40.4"	115.25ft

PLAN

SCALE: 1"=10'

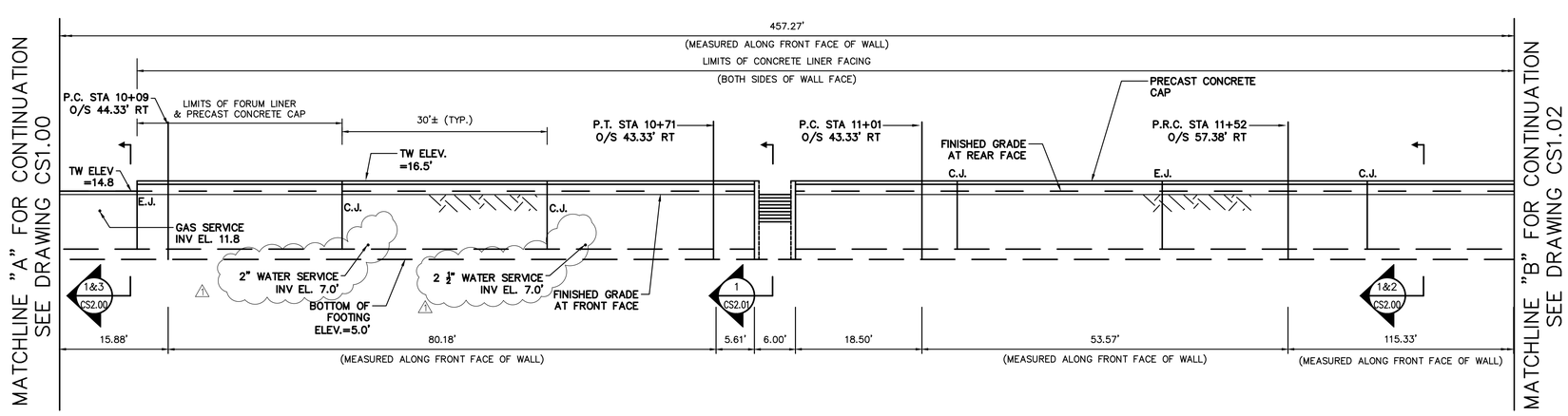

DEVELOPED ELEVATION

SCALE: 1"=10'

CONSTRUCTION DOCUMENTS
12/11/15

Weston&Sampson®
273 Dividend Road, Rocky Hill, CT 06067
(860) 513-1473
(800) SAMPSON
www.westonandsampson.com

No.	Date	Dr.By	Ck.By	App.By	Description
1	03/03/16	LEC	JSP	CBW	ADDENDUM #1

REGISTERED PROFESSIONAL ENGINEER

03-07-16
DATE

STATE OF CONNECTICUT ★ PETER J. GRANDY ★ No. 15495 ★ Licensed PROFESSIONAL ENGINEER

TOWN OF GREENWICH – DEPARTMENT OF PUBLIC WORKS
RITCH AVENUE WEST, GREENWICH, CONNECTICUT

BYRAM PARK POOL REPLACEMENT

STRUCTURAL DETAILS

CADD NO.	SCALE:	CONTRACT:	JOB NO.	DR.BY	DSN.BY	CHK.BY	APP.BY
GREENWICH	AS SHOWN	–	2130336	L.E.C.	P.J.G.	P.J.G.	C.B.W.

CS1.01

FILE NO.

SHEET – OF –

CURVE DATA	R	Δ	L
5	75ft	88°–02'–40.4"	115.25ft
6	100ft	12°–20'–50.1"	21.50ft

REFERENCE NOTES:

1. C.J. – INDICATES CONTRACTION JOINT SEE DRAWING CS2.00
2. E.J. – INDICATES EXPANSION JOINT SEE DRAWING CS2.00
3. FOR TYPICAL WALL SECTION SEE DRAWING CS2.00
4. FOR TYPICAL MASONRY STONE FACING SEE DRAWING CS2.00
5. FOR CONCRETE SLAB DETAILS SEE DRAWING CS2.01
6. FOR GENERAL NOTES SEE DRAWING CS1.00
7. FOR STAIR DETAILS SEE DRAWING CS2.01
8. ✦ DENOTES BORING LOCATIONS
9. FOR TYPICAL PIPE SLEEVE SEE DRAWING CS2.01

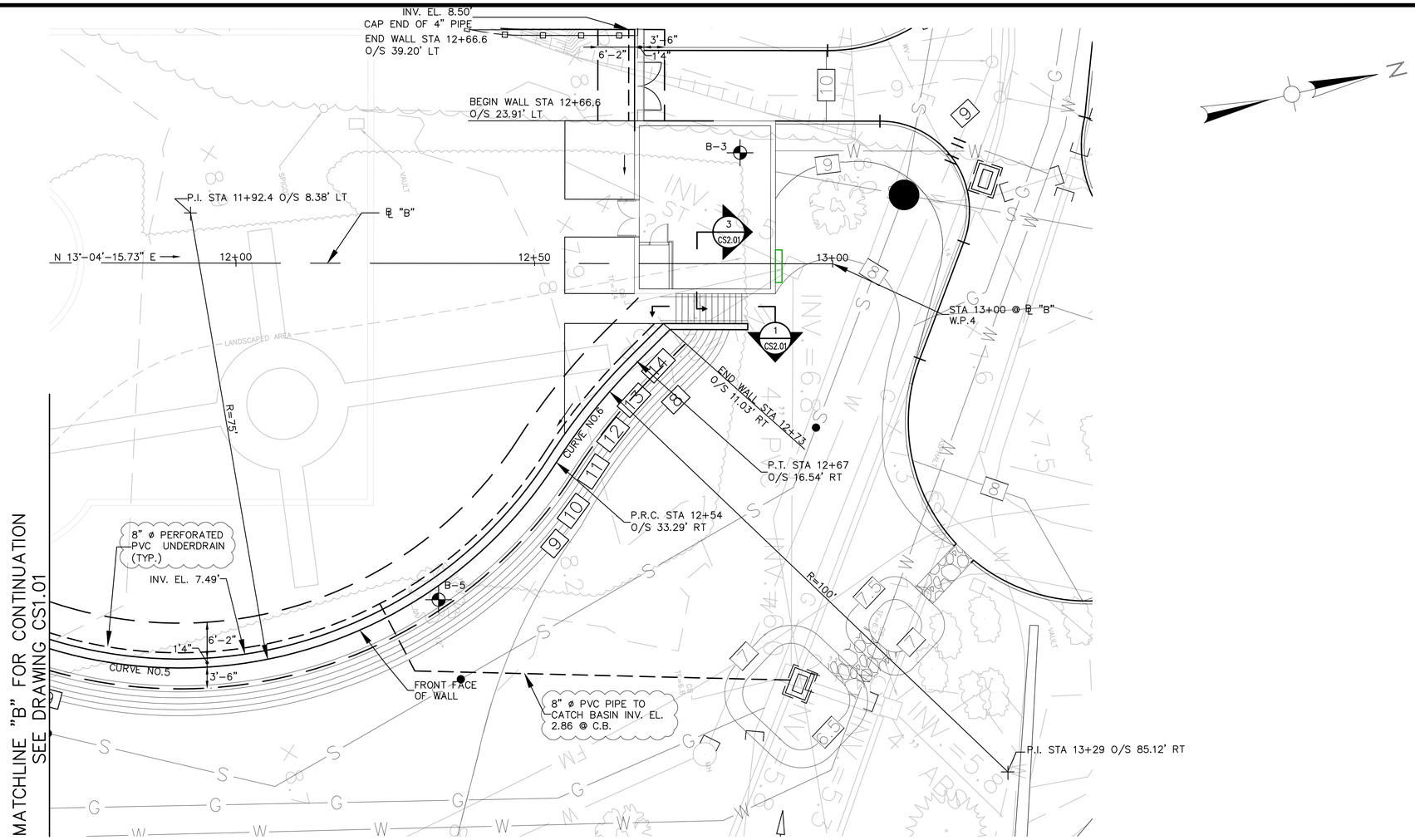

PLAN

SCALE: 1"=10'

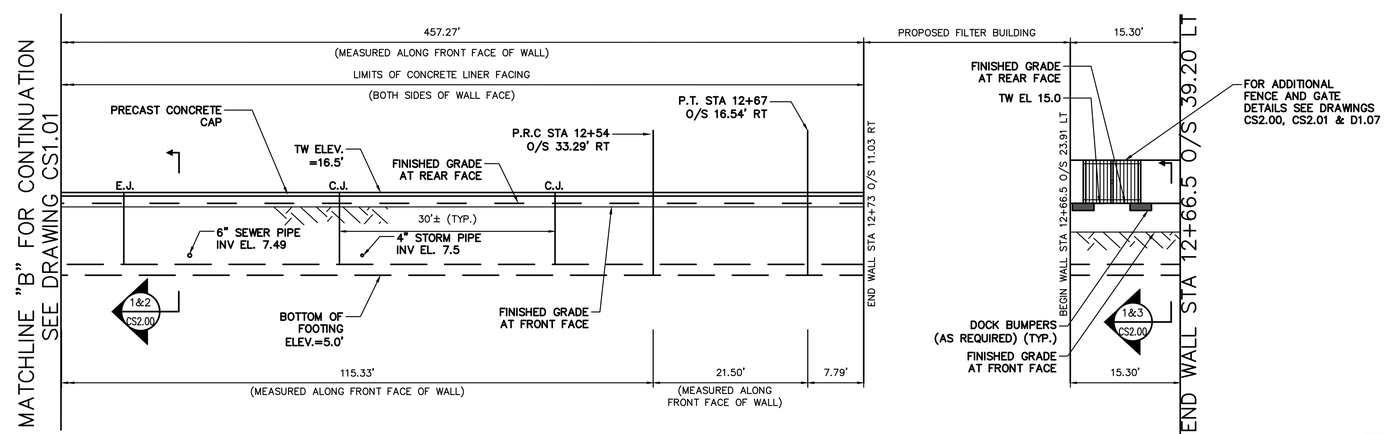

DEVELOPED ELEVATION

SCALE: 1"=10'

CONSTRUCTION DOCUMENTS
12/11/15

Weston&Sampson®
273 Dividend Road, Rocky Hill, CT 06067
(860) 513-1473 (800) SAMPSON
www.westonandsampson.com

No.	Date	Dr.By	Ck.By	App.By	Description
1	03/03/16	LEC	JSP	CRW	ADDENDUM #1

REGISTERED PROFESSIONAL ENGINEER — 03-07-16 DATE

STATE OF CONNECTICUT ★ PETER J. GRANDY ★ No. 15495 ★ PROFESSIONAL ENGINEER

TOWN OF GREENWICH – DEPARTMENT OF PUBLIC WORKS
RITCH AVENUE WEST, GREENWICH, CONNECTICUT
BYRAM PARK POOL REPLACEMENT
STRUCTURAL DETAILS

CADD NO.	SCALE:	CONTRACT:	JOB NO.	DR.BY	DSN.BY	CHK.BY	APP.BY
GREENWICH	AS SHOWN	–	2130336	L.E.C.	P.J.G.	P.J.G.	C.B.W.

CS1.02

FILE NO.

SHEET – OF –

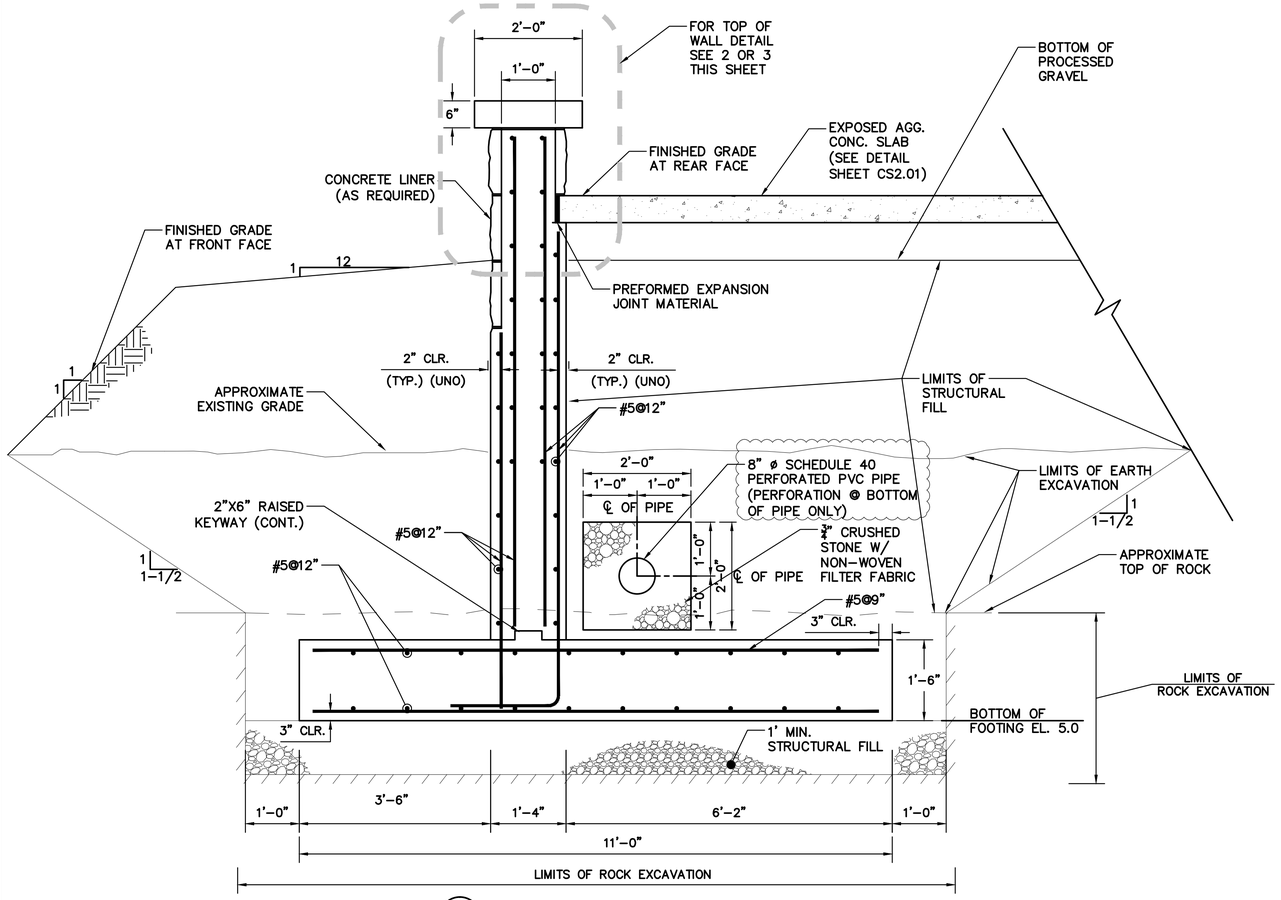

1 CS2.00 TYPICAL RETAINING WALL SECTION
SCALE: 3/4" = 1'-0"

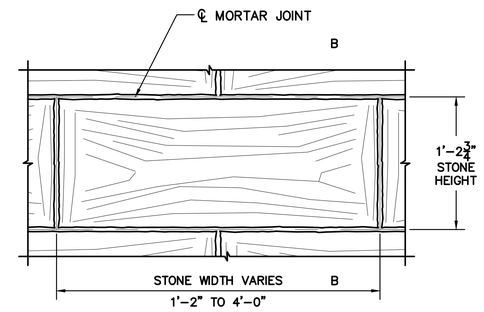

FORM LINER – STONE PATTERN – ALTERNATE "A"
SCALE: 1-1/2" = 1'-0"

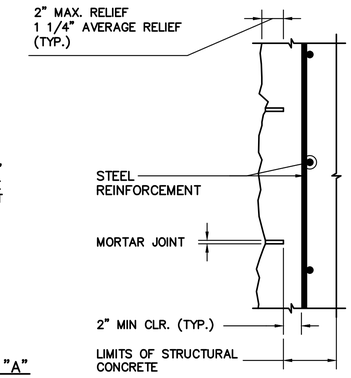

SECTION B–B
SCALE: 1-1/2" = 1'-0"

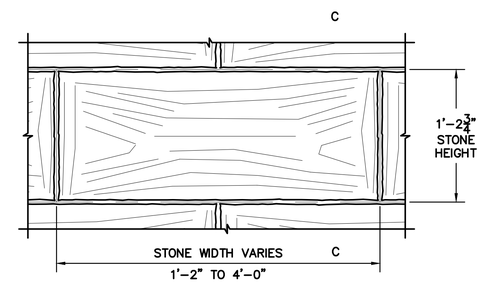

FORM LINER – STONE PATTERN – ALTERNATE "B"
SCALE: 1-1/2" = 1'-0"

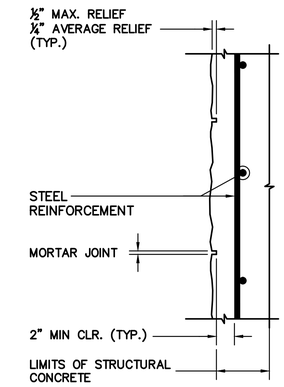

SECTION C–C
SCALE: 1-1/2" = 1'-0"

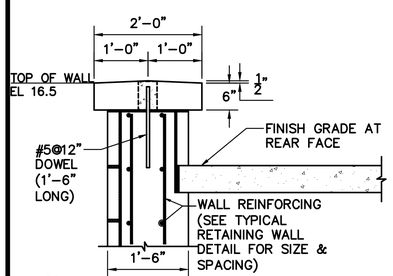

2 CS2.00 TYPICAL PRECAST CONCRETE CAP
SCALE: 3/4" = 1'-0"

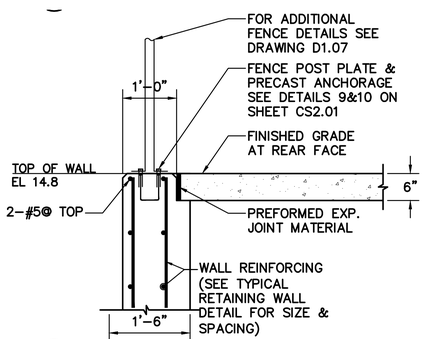

3 CS2.00 TYPICAL TOP OF WALL WITH FENCE
SCALE: 3/4" = 1'-0"

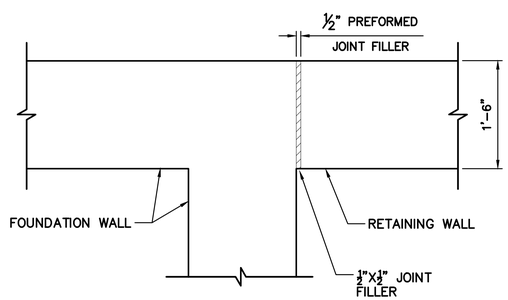

4 CS2.00 EXPANSION JOINT BETWEEN BUILDING AND RETAINING WALL
SCALE: 1-1/2" = 1'-0"

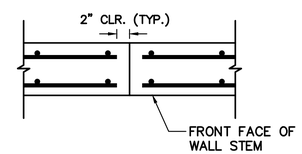

5 CS2.00 TYPICAL WALL CONTRACTION JOINT DETAIL
SCALE: 1" = 1'-0"

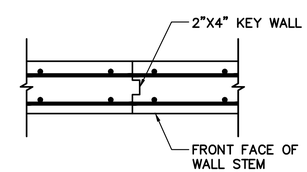

6 CS2.00 TYPICAL WALL CONSTRUCTION JOINT DETAIL
SCALE: 1" = 1'-0"

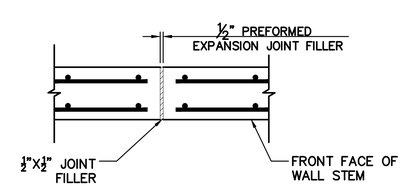

7 CS2.00 TYPICAL WALL EXPANSION JOINT DETAIL
SCALE: 1" = 1'-0"

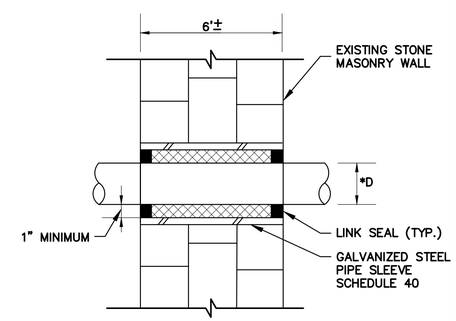

8 CS2.00 PIPE PENETRATION AT EXISTING STONE MASONRY WALL DETAIL
NTS

*D= DIAMETER OF PROPOSED PIPE PLUS PIPE WALL THICKNESS

PIPE SLEEVE INSTRUCTION NOTES:

1. DRILL THROUGH EXISTING STONE MASONRY WALL.
2. INSTALL GALVANIZED STEEL PIPE THROUGH SLEEVE.
3. PLACE PROPOSED PIPE THROUGH SLEEVE.
4. INSTALL LINK SEALS AT BOTH FACES OF EXISTING STONE MASONRY WALL.
5. PIPE SLEEVE INSTALLATION MAY VARY WITH PERMISSION OF THE ENGINEER.

CONSTRUCTION DOCUMENTS
12/11/15

Weston&Sampson®
273 Dividend Road, Rocky Hill, CT 06067
(860) 513-1473 (800) SAMPSON
www.westonandsampson.com

No.	Date	Dr.By	Ck.By	App.By	Description	DATE
1	03/03/16	LEC	USP	CBW	ADDENDUM #1	
A					PROVED	03-07-16

REGISTERED PROFESSIONAL ENGINEER

STATE OF CONNECTICUT ★ PETER J. GRANDY ★ No. 15495 ★ LICENSED PROFESSIONAL ENGINEER

TOWN OF GREENWICH – DEPARTMENT OF PUBLIC WORKS
RITCH AVENUE WEST, GREENWICH, CONNECTICUT
BYRAM PARK POOL REPLACEMENT
STRUCTURAL DETAILS

CADD NO.	SCALE:	CONTRACT:	JOB NO.	DR.BY	DSN.BY	CHK.BY	APP.BY
GREENWICH	AS SHOWN	–	2130336	L.E.C.	P.J.G.	P.J.G.	C.B.W.

FILE NO.

CS2.00

SHEET – OF –

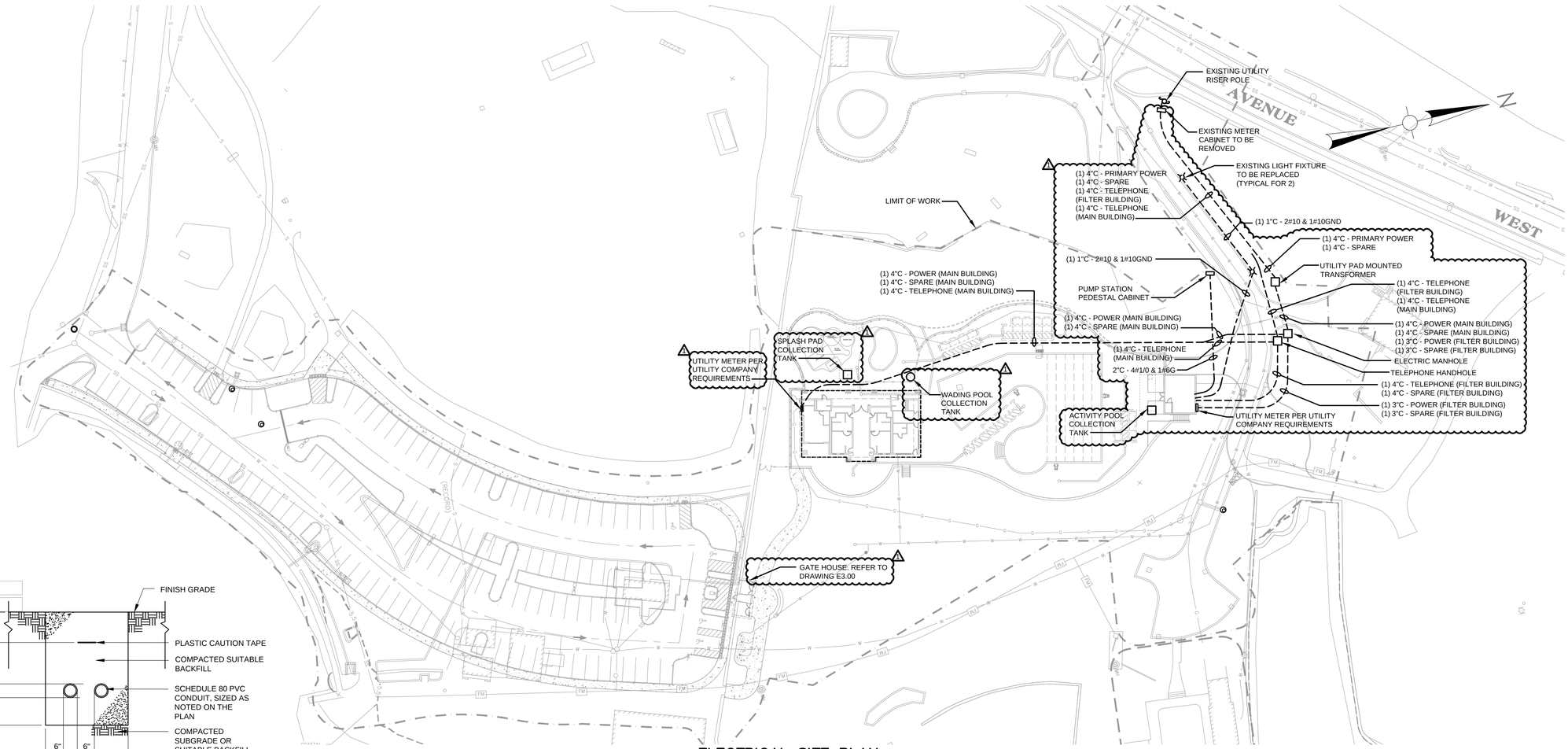

ELECTRICAL SITE PLAN

SCALE: 1"=40'

0 40' 80' 120'

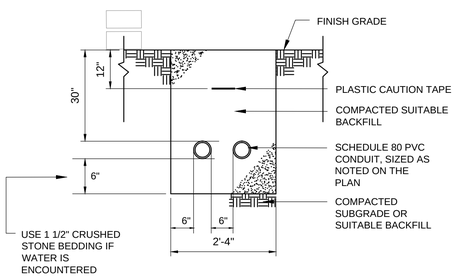

TYPICAL DIRECT BURIED CONDUIT DETAIL

NOT TO SCALE

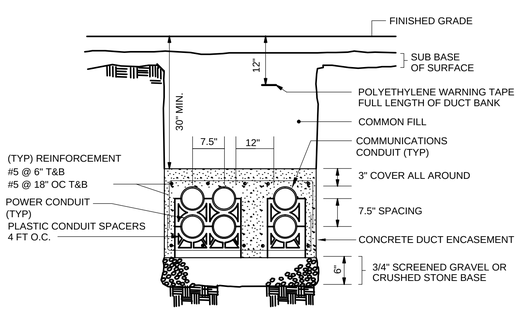

TYPICAL CONCRETE ENCASED DUCTBANK DETAIL

NOT TO SCALE

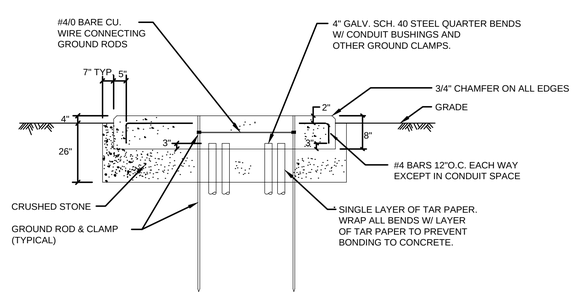

NOTE:
PRIMARY AND SECONDARY CONDUITS SHALL BE 4" RIGID GALVANIZED STEEL.

SECTION "A-A"
NOT TO SCALE

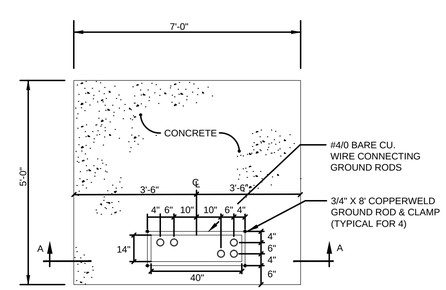

PLAN
NOT TO SCALE

NOTE:
CONTRACTOR SHALL COORDINATE ALL TRANSFORMER PAD DIMENSIONS AND REQUIREMENTS WITH ELECTRIC UTILITY PRIOR TO INSTALLATION.

TYPICAL TRANSFORMER PAD DETAIL

NOT TO SCALE

COPYRIGHT 2015 WESTON & SAMPSON

Z:\CT-Rockville-Projects\Greenwich CT\Greenwich Parks and Recreation\Byram Park\CAD\MEP\Electrical\E2.01 Electrical Site Plan.dwg

Weston&Sampson®
273 Dividend Road, Rocky Hill CT 06067
(860) 513-1473 (800) SAMPSON
www.westonandsampson.com

No.	Date	Dr.By	Ck.By	App.By	Description
1	03/03/16	DNM	RFM	RFM	ADDENDUM NO.1

A P P R O V E D

REGISTERED PROFESSIONAL ENGINEER

DATE

3/3/2016

TOWN OF GREENWICH – DEPARTMENT OF PUBLIC WORKS
RITCH AVENUE WEST, GREENWICH, CONNECTICUT
BYRAM PARK POOL REPLACEMENT

ELECTRICAL SITE PLAN

CADD NO.	SCALE: 1"=40'	CONTRACT:	JOB NO. 2130336	DR.BY	DSN.BY DNM	CHK.BY RFM	APP.BY RFM

E2.01

FILE NO.

SHEET – OF

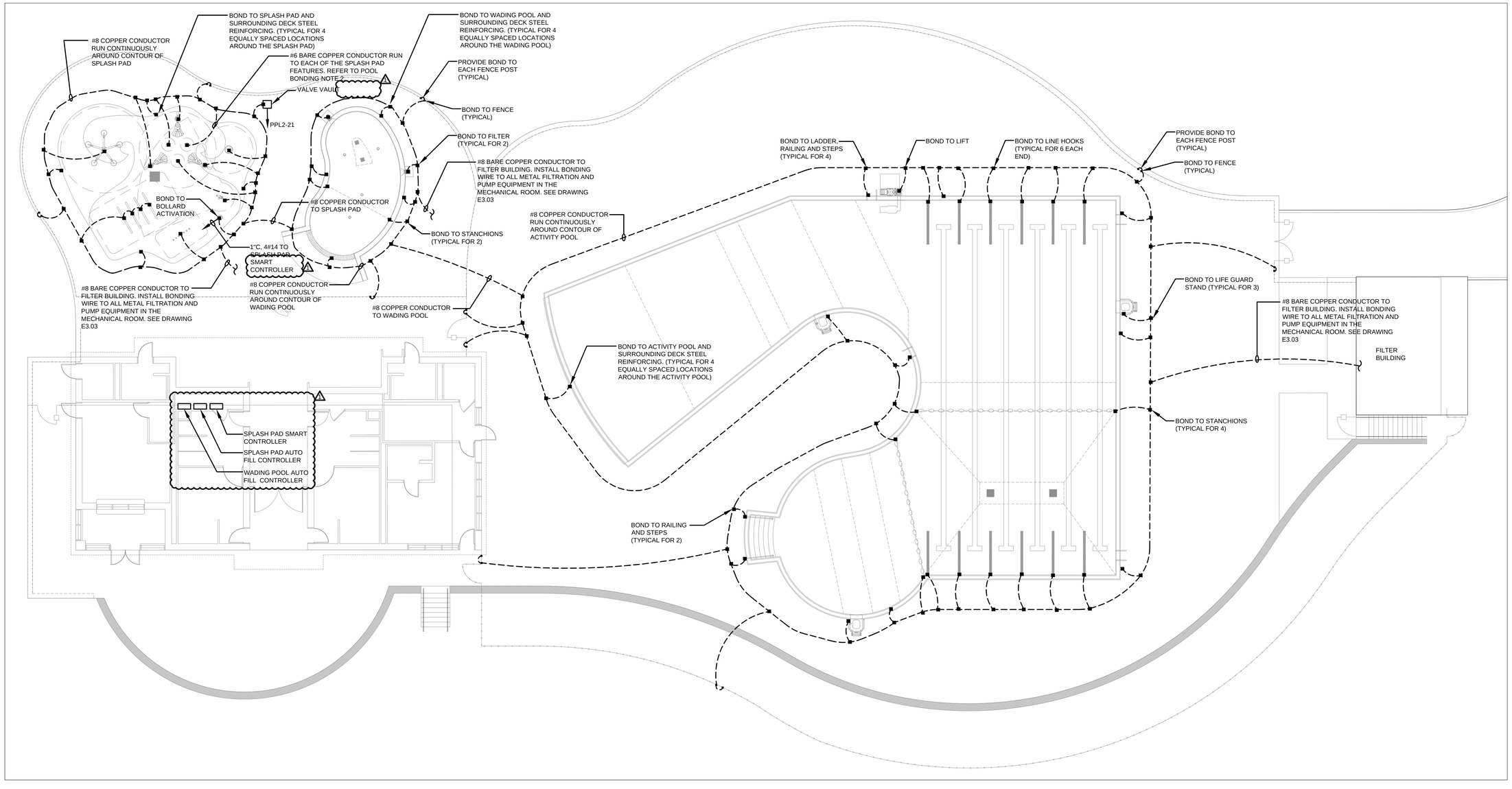

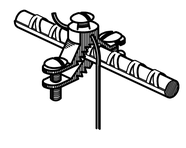

BONDING DETAIL

SCALE: NTS

EQUIPOTENTIAL BONDING GRID

REFER TO NEC ARTICLE 680.26

EQUIPOTENTIAL BONDING GRID TO RUN CONTINUOSULY AROUND THE CONTOUR OF POOL EXTENDING 18" TO 24" FROM THE INSIDE WALLS OF THE POOL. THE 4"-6" BELOW GRADE GRID PATTERN SHALL BE SECURED WITHIN OR UNDER THE POOL DECK MEDIA. THE GRID SHALL BE CONSTRUCTED OF MINIMUM #8 AWG BARE SOLID COPPER CONDUCTORS.

EQUIPOTENTIAL BONDING CONDUCTOR SHALL COMPLY WITH FBC 2007 ALTERNATIVE AND EQUIVALENT METHOD TO NEC 2015 ARTICLE 680.26.

POOL BONDING NOTES:

1. ALL METALLIC PARTS OF THE POOL STRUCTURE, INCLUDING THE REINFORCING METAL OF THE POOL SHELL, POOL REBAR, DRAINS, FOUNTAINS, METALLIC RECESSED LADDER RECEIVERS, PERIMETER GUTTER DRAIN, AND ALL OTHER METALLIC COMPONENTS AS REQUIRED BY CODE SHALL BE BONDED PER THE REQUIREMENTS OF THE CURRENT ELECTRICAL CODE.
2. SOLID COPPER BONDING CONDUCTORS SHALL NOT BE SMALLER THAN NO. 8 AWG.
3. FURNISH AND INSTALL ANY REQUIRED GROUNDING RODS.
4. PROVIDE AND INSTALL BONDING CONDUCTORS THROUGHOUT THE BONDING SYSTEM WITH CONNECTION TO EACH ITEM OF THE POOL EQUIPMENT: LADDERS, LIFEGUARD CHAIRS, ETC.
5. BONDING CONDUCTORS SHALL BE CONTINUOUS.
6. INSULATE ANY SPLICES WITH APPROVED INSULATION KIT AND MAKE WATER TIGHT TO PROTECT FROM CORROSION AND MAINTAIN THE INTEGRITY OF THE SPLICE.
7. PROVIDE RED MARKING TAPE BURIED 6" TO 10" BELOW SURFACE INDICATING ANY BURIED BOND WIRES BELOW THAT EXTEND BEYOND THE PERIMETER OF THE POOL DECK.
8. COORDINATE INSTALLATION OF POOL GROUNDING/BONDING AT THE BEGINNING OF THE PROJECT. ELECTRICIAN MUST BE PRESENT TO PERFORM HIS WORK BEFORE THE CONCRETE IS APPLIED.
9. COORDINATE FOR CONNECTION OF ALL POOL REBAR, REINFORCING STEEL, AND EQUIPMENT BONDS BEFORE CONCRETE IS POURED.

COPYRIGHT 2015 WESTON & SAMPSON

Z:\CT-Rockville-Projects\Greenwich CT\Greenwich Parks and Recreation\Byram Park\CAD\MEP\Electrical\E2.02 Electrical Pool Bonding Plan.dwg

Weston&Sampson®
273 Dividend Road, Rocky Hill CT 06067
(860) 513-1473 (800) SAMPSON
www.westonandsampson.com

No.	Date	Dr.By	Ck.By	App.By	Description
1	03/03/16	DNM	RFM	RFM	ADDENDUM NO.1

A P P R O V E D

REGISTERED PROFESSIONAL ENGINEER

DATE

TOWN OF GREENWICH – DEPARTMENT OF PUBLIC WORKS
RITCH AVENUE WEST, GREENWICH, CONNECTICUT
BYRAM PARK POOL REPLACEMENT

ELECTRICAL POOL BONDING PLAN

CADD NO.	SCALE:	CONTRACT:	JOB NO.	DR.BY	DSN.BY	CHK.BY	APP.BY
	1"=10'-0"		2130336	DNM	DNM	RFM	RFM

E2.02

FILE NO.

SHEET OF

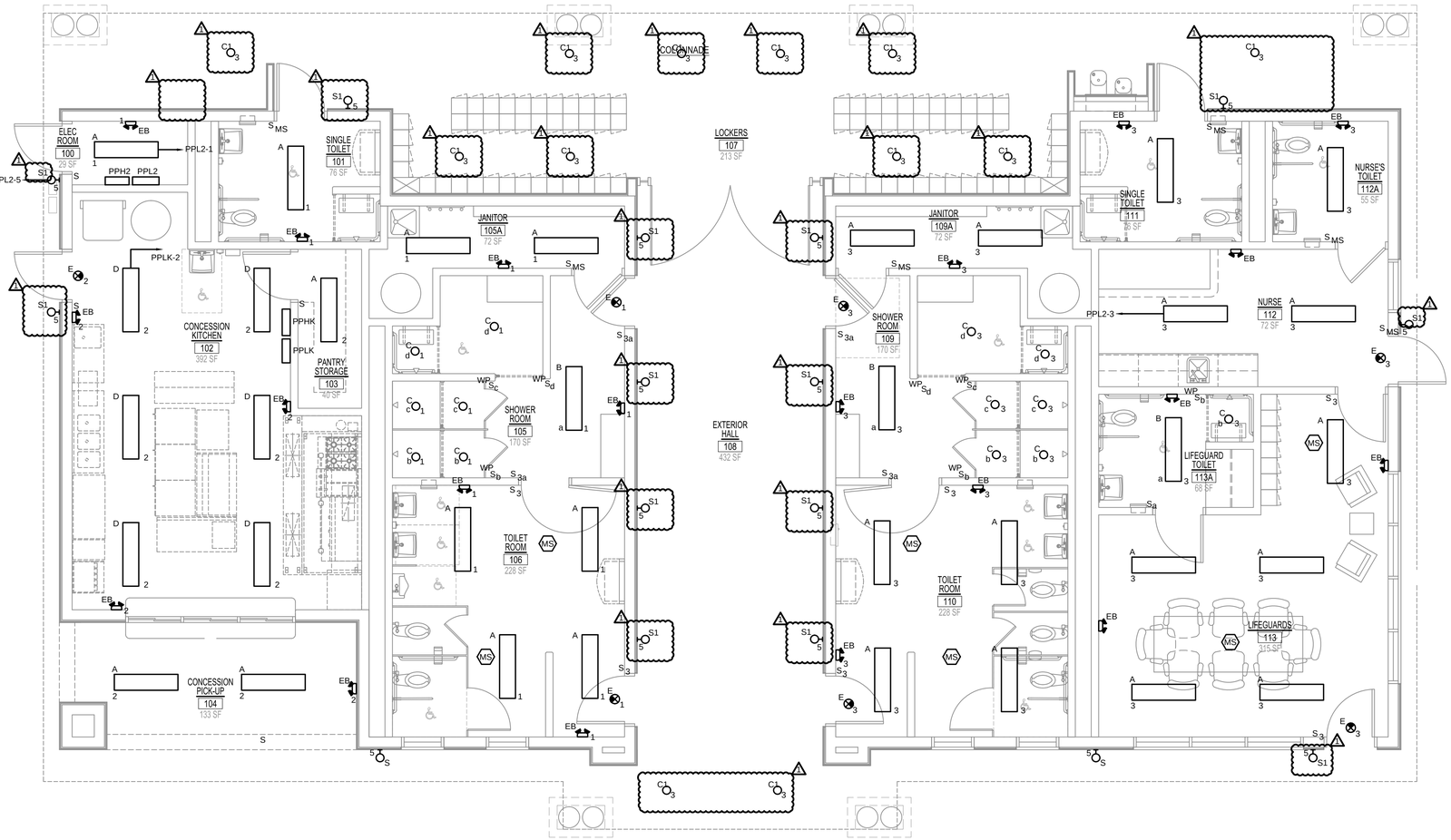

MAIN BUILDING LIGHTING PLAN

SCALE: 1/4" = 1'-0"

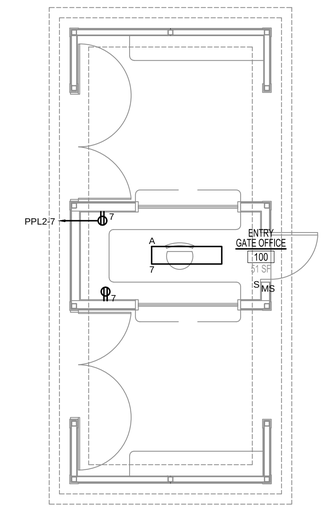

ENTRY GATE LIGHTING PLAN

SCALE: 1/4" = 1'-0"

GENERAL LIGHTING NOTES

1. MOUNTING HEIGHTS OF ALL WALL MOUNTED AND PENDANT MOUNTED LIGHTING FIXTURES SHALL BE DETERMINED BY ARCHITECT. REFER TO ARCHITECTURAL SECTIONS AND ELEVATIONS.
2. REFER TO ARCHITECTURAL REFLECTED CEILING PLANS FOR EXACT LOCATION OF ALL LIGHTING FIXTURES.
3. ALL LED LAMPS SHALL BE 3500°K UNLESS SPECIFIED OTHERWISE.
4. VERIFY EXACT CEILING TYPES PRIOR TO PURCHASING RECESSED FIXTURES.
5. THE ELECTRICAL CONTRACTOR SHALL FURNISH ALL LIGHTING FIXTURES COMPLETE WITH MOUNTING ACCESSORIES TO MEET JOB REQUIREMENTS.
6. THE ELECTRICAL CONTRACTOR SHALL VERIFY FIXTURE MOUNTING AND LOCATION AGAINST PLANS, ELEVATIONS AND DETAIL DRAWINGS. EXACT LOCATION OF ALL FIXTURES SHALL BE CONFIRMED WITH THE ARCHITECT PRIOR TO ROUGHING IN.
7. ALL FIXTURES SHALL BE SUPPORTED FROM THE BUILDING STRUCTURE, INDEPENDENT OF HUNG CEILINGS.

COPYRIGHT 2015 WESTON & SAMPSON

Z:\CT-Rockyhill-Projects\Greenwich CT\Greenwich Parks and Recreation\Byram Park\CAD\MEP\Electrical\E3.00 Electrical Main Building Lighting Plan.dwg

Weston&Sampson®
273 Dividend Road, Rocky Hill, CT 06067
(860) 513-1473 (800) SAMPSON
www.westonandsampson.com

No.	Date	Dr.By	Ck.By	App.By	Description	DATE
1	03/03/16	DNM	RFM	RFM	ADDENDUM NO.1	

A P P R O V E D

REGISTERED PROFESSIONAL ENGINEER

TOWN OF GREENWICH – DEPARTMENT OF PUBLIC WORKS
RITCH AVENUE WEST, GREENWICH, CONNECTICUT
BYRAM PARK POOL REPLACEMENT

ELECTRICAL MAIN BUILDING LIGHTING PLAN

CADD NO.	SCALE:	CONTRACT:	JOB NO.	DR.BY	DSN.BY	CHK.BY	APP.BY
–	1/4"=1'-0"		2130336	DNM	DNM	RFM	RFM

E3.00

FILE NO. –

SHEET – OF

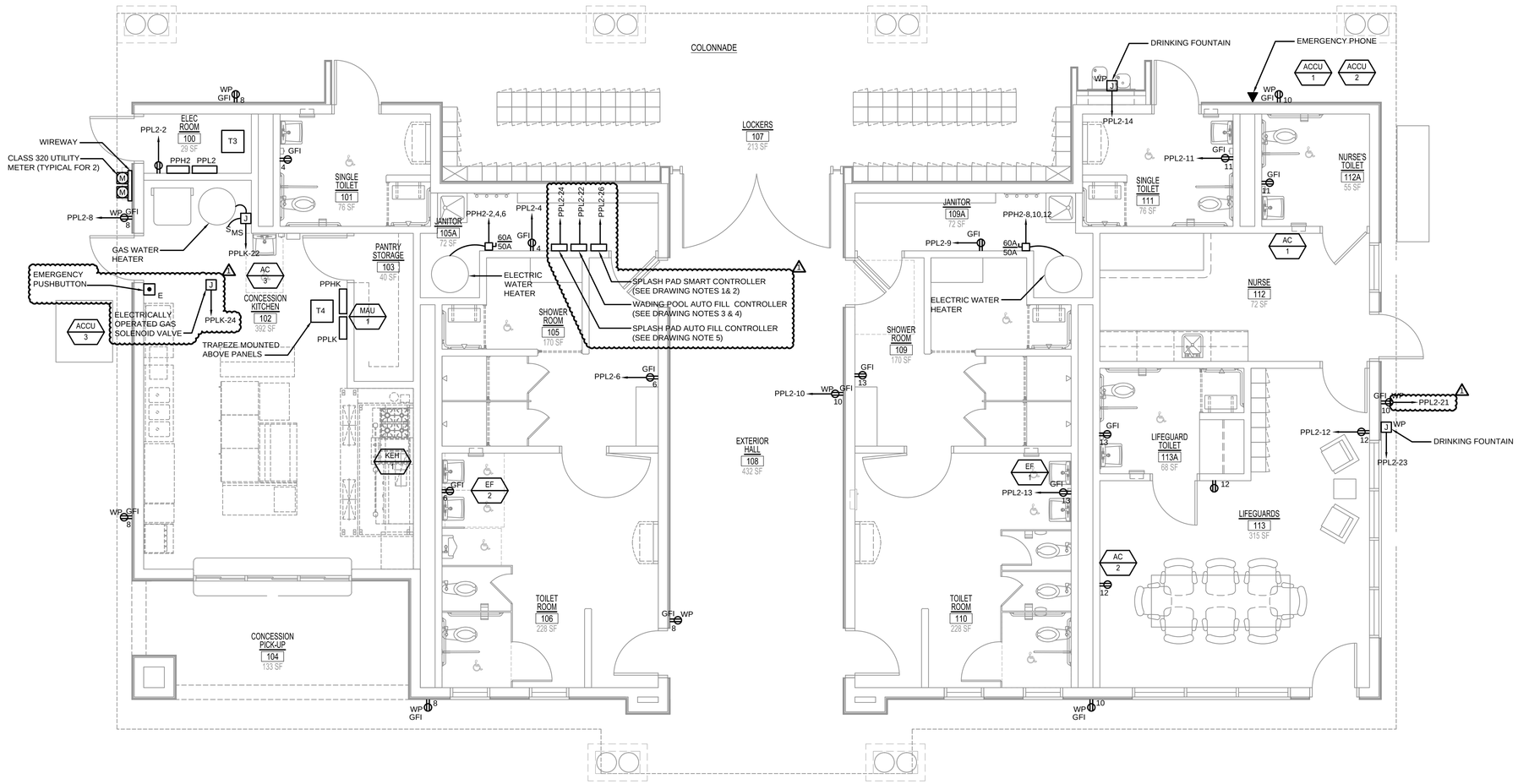

DRAWING NOTES:

1. 3"C UNDERGROUND WITH 24#14 TO SPLASH PAD VALVE VAULT SEE DRAWING E2.02
2. 1-1/2"C WITH 2#14 TO SPLASH PAD FILTER PUMP VFD
3. 1-1/2"C WITH 2#14 TO WADING FILTER PUMP VFD
4. 1"C WITH 2/C#16 TWISTED SHIELDED 4-20mA PAIR TO PROBE IN WADING POOL COLLECTION TANK SEE DRAWING E2.01 FOR LOCATION.
5. 1"C WITH 2/C#16 TWISTED SHIELDED 4-20mA PAIR TO PROBE IN SPLASH PAD COLLECTION TANK SEE DRAWING E2.01 FOR LOCATION.

BRANCH CIRCUIT WIRING NOTES

1. WIRING IS SHOWN ON DRAWINGS ONLY FOR SPECIFIC ROUTING OR SPECIAL CONDITIONS.
2. WIRING AND CONDUIT SHALL BE REQUIRED BETWEEN ALL OUTLETS AND PANELS INDICATED WITH CIRCUIT NUMBERS AND PANEL DESIGNATIONS.
3. ALTHOUGH BRANCH CIRCUIT WIRING AND CONDUIT IS NOT SHOWN, IT IS THE INTENT OF THESE DOCUMENTS THAT A COMPLETE BRANCH CIRCUIT WIRING SYSTEM BE INSTALLED.
4. MINIMUM WIRE SIZE SHALL BE NO. 12 AWG FOR POWER AND LIGHTING CIRCUITS AND NO. 14 AWG FOR CONTROL WIRING. 120V BRANCH CIRCUITS OF MORE THAN 100 FEET AND 277V CIRCUITS OF MORE THAN 150 FEET FROM CENTER OF LOAD TO PANEL SHALL BE #10 AWG.
5. ALL SWITCH CONTROLS SHALL BE PROVIDED WITH WIRING AND CONDUIT AS REQUIRED.
6. ALL BRANCH CIRCUIT CONDUCTORS SHALL BE 98% CONDUCTIVITY, COPPER MINIMUM #12 AWG SIZE, THWN/THHN INSULATION, 600 VOLTS RATED, UNLESS OTHERWISE NOTED.

COPYRIGHT 2015 WESTON & SAMPSON

Weston&Sampson®
273 Dividend Road, Rocky Hill, CT 06067
(860) 513-1473 (800) SAMPSON
www.westonandsampson.com

No.	Date	Dr.By	Ck.By	App.By	Description
1	03/03/16	DNM	RFM	RFM	ADDENDUM NO.1

A P P R O V E D

REGISTERED PROFESSIONAL ENGINEER

DATE

TOWN OF GREENWICH – DEPARTMENT OF PUBLIC WORKS
RITCH AVENUE WEST, GREENWICH, CONNECTICUT
BYRAM PARK POOL REPLACEMENT

ELECTRICAL MAIN BUILDING POWER PLAN

CADD NO.	SCALE:	CONTRACT:	JOB NO.	DR.BY	DSN.BY	CHK.BY	APP.BY
–	1/4"=1'-0"		2130336	DNM	DNM	RFM	RFM

E3.01

FILE NO. –

SHEET – OF

Z:\CT-Rockyhill-Projects\Greenwich CT\Greenwich Parks and Recreation\Byram Park\CAD\MEP\Electrical\E3.01 Electrical Main Building Power Plan.dwg

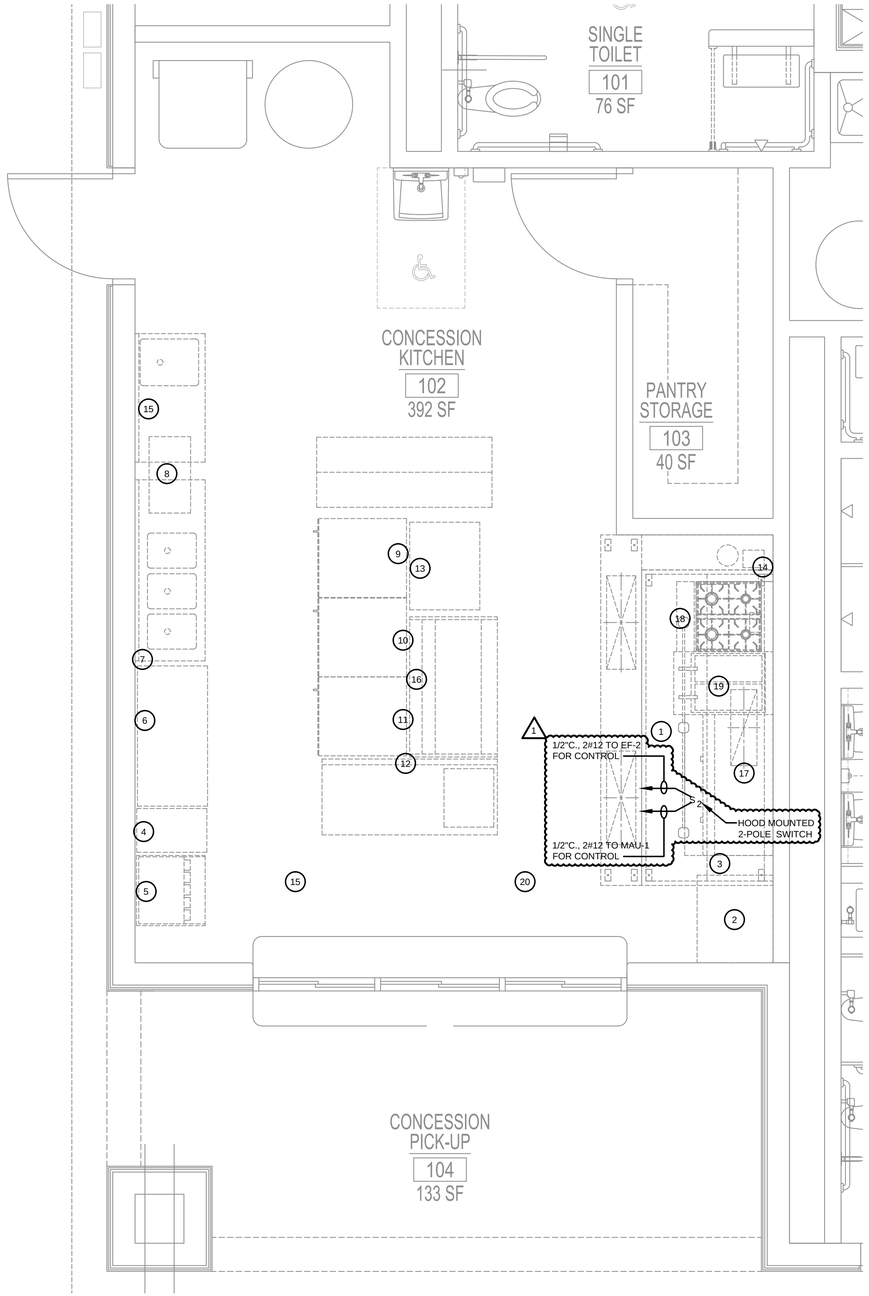

KITCHEN PART PLAN

SCALE: 1/2" = 1'-0"

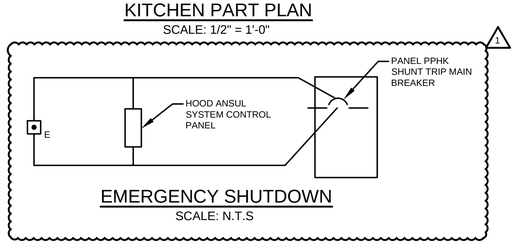

EMERGENCY SHUTDOWN

SCALE: N.T.S

KITCHEN EQUIPMENT SCHEDULE

ITEM NO.	DESCRIPTION	LOAD	BRANCH CIRCUIT	CIRCUIT BREAKER	CONDUCTORS NO.	CONDUCTORS SIZE	CONDUIT	CONNECTIONS OUTLET	CONNECTIONS VOLTAGE	CONNECTIONS PHASE
1	CHEF TABLE	1/5 HP	PPLK-1	20A-1P	2	#12	3/4"		120	1
2	ICE CREAM FREEZER		PPLK-21							
3	GENERAL USE OUTLET		PPLK-3	20A-1P	2	#12	3/4"	NEMA 5-20R	120	1
4	ICE MACHINE	3.6 AMPS	PPLK-4	15A-1P	2	#12	3/4"		120	1
5	SODA DISPENSER		PPLK-5	20A-1P	2	#12	3/4"		120	1
6	COFFEE MAKER		PPLK-6	20A-1P	2	#12	3/4"	NEMA 5-20R	120	1
7	GENERAL USE OUTLET		PPLK-7	20A-1P	2	#12	3/4"	NEMA 5-20R	120	1
8	BIG DIPPER	4.5 AMPS	PPLK-8	20A-1P	2	#12	3/4"		120	1
9	FREEZER	1/4 HP	PPLK-9	20A-1P	2	#12	3/4"	NEMA 5-15R	120	1
10	REFRIGERATOR	7.7 AMPS	PPLK-10	20A-1P	2	#12	3/4"	NEMA 5-15R	120	1
11	REFRIGERATOR	6 AMPS	PPLK-11	20A-1P	2	#12	3/4"	NEMA 5-15R	120	1
12	GENERAL USE OUTLET		PPLK-12	20A-1P	2	#12	3/4"	NEMA 5-20R	120	1
13	GENERAL USE OUTLET		PPLK-13	20A-1P	2	#12	3/4"	NEMA 5-20R	120	1
14	FIRE SUPPRESSION SYSTEM		PPLK-14	20A-1P	2	#12	3/4"		120	1
15	GENERAL USE OUTLET		PPLK-15	20A-1P	2	#12	3/4"	NEMA 5-20R	120	1
16	SANDWICH PREP	1/3 HP	PPLK-16	20A-1P	2	#12	3/4"		120	1
17	GRIDDLE AND BROILER	1 AMP	PPLK-17	20A-1P	2	#12	3/4"	NEMA 5-15R	120	1
18	4 BURNER GAS RANGE		PPLK-18	20A-1P	2	#12	3/4"		120	1
19	GAS FRYER		PPLK-19	20A-1P	2	#12	3/4"		120	1
20	GENERAL USE OUTLET		PPLK-20	20A-1P	2	#12	3/4"	NEMA 5-20R	120	1

KITCHEN EQUIPMENT NOTES

1. ELECTRICAL CONTRACTOR IS TO PROVIDE ALL FINAL CONNECTIONS FROM JUNCTION BOXES TO CONNECTION POINT(S) LOCATED ON OR IN EQUIPMENT FURNISHED BY THE KITCHEN EQUIPMENT CONTRACTOR.
2. ELECTRICAL CONTRACTOR TO PROVIDE ALL CONDUIT, JUNCTION BOXES, ELECTRICAL OUTLETS, SWITCHES, COVER PLATES AND PULL BOXES NOT BUILT INTO EQUIPMENT OR FABRICATED FIXTURES. ALL ROUGH-INS SHALL BE CONCEALED IN WALLS WHEREVER POSSIBLE.
3. KITCHEN EQUIPMENT CONTRACTOR SHALL INSTALL ALL FABRICATED EQUIPMENT, FURNISH AND INSTALL ALL OUTLETS, JUNCTION BOXES, SWITCHES, CONTROLS, CONDUIT AND SERVICE FITTINGS FOR EACH DEVICE BUILT-INTO OR FORMING AN INTEGRAL PART OF THE EQUIPMENT. WHERE FABRICATED EQUIPMENT IS SUPPLIED WITH PANELBOARDS, PANELBOARDS SHALL BE COMPLETE WITH MAIN CIRCUIT BREAKERS FOR EACH DEVICE OR OUTLET WITHIN THE FIXTURE. ELECTRICAL CONTRACTOR TO FURNISH AND INSTALL ALL WIRING AND MAKE ALL INTERNAL AND FINAL CONNECTIONS. KITCHEN EQUIPMENT CONTRACTOR TO FURNISH TO ELECTRICAL CONTRACTOR A WIRING SCHEMATIC FOR HIS USE.
4. LARGE PIECES OF EQUIPMENT SUCH AS CHEF'S COUNTERS, LOOKS COUNTERS, ETC., WILL BE DELIVERED TO THE JOBSITE IN SECTIONS. ELECTRICAL CONTRACTOR SHALL MAKE INTERCONNECTIONS BETWEEN SECTIONS AFTER KITCHEN EQUIPMENT CONTRACTOR HAS SET EQUIPMENT IN PLACE. COORDINATE WITH KITCHEN EQUIPMENT CONTRACTOR ITEMS THAT REQUIRE FILED ASSEMBLY.
5. ELECTRICAL CONTRACTOR SHALL COORDINATE ALL KITCHEN EQUIPMENT FINAL CONNECTIONS WITH THE KITCHEN EQUIPMENT SUPPLIER PRIOR TO ANY ROUGH-IN WORK IS STARTED.

PANELBOARD SCHEDULE (CONCESSION BUILDING)

DESIGNATION: PPHK
LOCATION: KITCHEN
RATING: 200 AMPS
MAIN: 200 AMP MCB
S.C. RATING: 10,000 A RMS SYSTEM
SERVICE: 277/480V, 3Ø, 4W
MOUNTING: SURFACE
REMARKS: SERVICE ENTRANCE RATED
SHUNT TRIP MAIN CIRCUIT BREAKER

CKT. NO.	LOAD DESIGNATION	CONN. LOAD (KVA)	BREAKER TRIP	BREAKER POLE	PHASE A	PHASE B	PHASE C	BREAKER POLE	BREAKER TRIP	CONN. LOAD (KVA)	LOAD DESIGNATION	CKT. NO.
1	-		-						-		-	2
3	PANEL PPLK		60						20		MAU-1	4
5	-		-						-		-	6
7	-		-						-		-	8
9	KEF-1		20						20		AC-3	10
11	-		-						-		-	12
13	SPARE		20						20		SPARE	14
15	SPARE		20						20		SPARE	16
17	SPARE		20						20		SPARE	18
19	SPARE		20						20		SPARE	20
21	SPARE		20						20		SPARE	22
23	SPARE		20						20		SPARE	24
25	SPARE		20						20		SPARE	26
27	SPARE		20						20		SPARE	28
29	SPARE		20						20		SPARE	30

PANELBOARD SCHEDULE (CONCESSION BUILDING)

DESIGNATION: PPLK
LOCATION: KITCHEN
RATING: 200 AMPS
MAIN: 150 AMP MCB
S.C. RATING: 10,000 A RMS SYSTEM
SERVICE: 120/208V, 3Ø, 4W
MOUNTING: SURFACE
REMARKS:

CKT. NO.	LOAD DESIGNATION	CONN. LOAD (KVA)	BREAKER TRIP	BREAKER POLE	PHASE A	PHASE B	PHASE C	BREAKER POLE	BREAKER TRIP	CONN. LOAD (KVA)	LOAD DESIGNATION	CKT. NO.
1	CHEF TABLE		20						20		LIGHTING	2
3	GENERAL USE OUTLET		20						20		ICE MACHINE	4
5	SODA DISPENSER		20						20		COFFEE MAKER	6
7	GENERAL USE OUTLET		20						20		BIG DIPPER	8
9	FREEZER		20						20		REFRIGERATOR	10
11	REFRIGERATOR		20						20		GENERAL USE OUTLET	12
13	GENERAL USE OUTLET		20						20		FIRE SUPPRESSION SYSTEM	14
15	GENERAL USE OUTLET		20						20		SANDWICH PREP	16
17	GRIDDLE AND BOILER		20						20		4 BURNER GAS RANGE	18
19	GAS FRYER		20						20		GENERAL USE OUTLET	20
21	ICE CREAM FREEZER		20						20		GAS WATER HEATER	22
23	ACCU-3		20						20		SOLENOID VALVE	24
25	-		-						20		SPARE	26
27	SPARE		20						20		SPARE	28
29	SPARE		20						20		SPARE	30
31	SPARE		20						20		SPARE	32
33	SPARE		20						20		SPARE	34
35	SPARE		20						20		SPARE	36
37	SPARE		20						20		SPARE	38
39	SPARE		20						20		SPARE	40
41	SPARE		20						20		SPARE	42

COPYRIGHT 2015 WESTON & SAMPSON

Weston&Sampson®
273 Dividend Road, Rocky Hill, CT 06067
(860) 513-1473 (800) SAMPSON
www.westonandsampson.com

No.	Date	Description
1	03/03/16	ADDENDUM NO.1

Dr.By DNM Ck.By RFM App.By RFM

APPROVED

REGISTERED PROFESSIONAL ENGINEER

DATE

TOWN OF GREENWICH – DEPARTMENT OF PUBLIC WORKS
RITCH AVENUE WEST, GREENWICH, CONNECTICUT
BYRAM PARK POOL REPLACEMENT

ELECTRICAL KITCHEN POWER PLAN

DSN.BY DNM CHK.BY RFM APP.BY RFM
DR.BY DNM JOB NO. 21303336
CONTRACT:
SCALE: AS NOTED
CADD NO. 1

E3.02

FILE NO. 1

SHEET — OF

Z:\CT-Rockyhill-Projects\Greenwich CT\Greenwich Parks and Recreation\Byram Park\CAD\MEP\Electrical\E3.02 Electrical Kitchen Power Plan.dwg

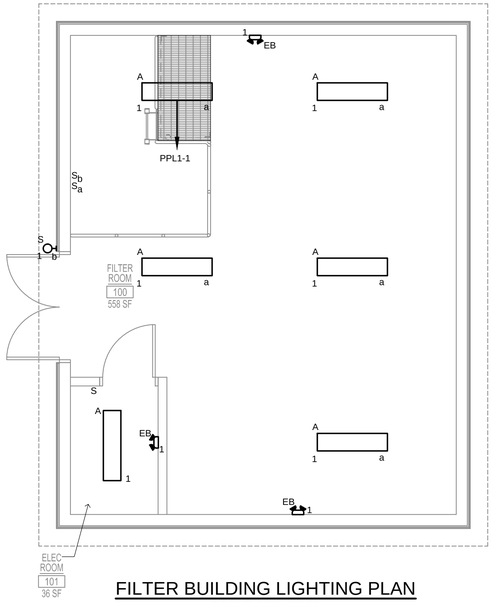

FILTER BUILDING LIGHTING PLAN

SCALE: 1/4" = 1'-0"

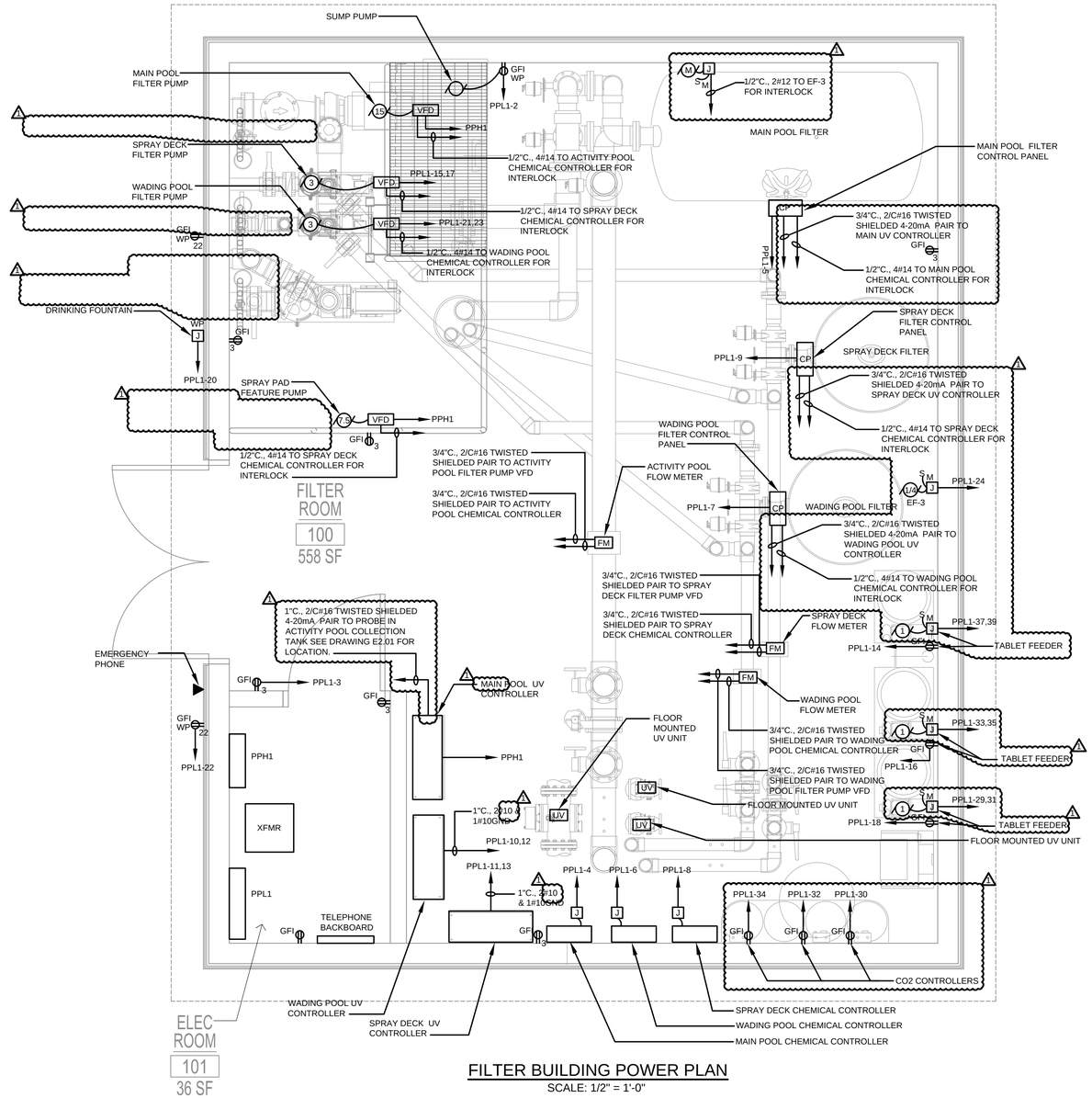

FILTER BUILDING POWER PLAN

SCALE: 1/2" = 1'-0"

UV SYSTEM NOTES:

1. CONTRACTOR SHALL RUN (2) 1-1/4" CONDUITS FROM THE UV CONTROL PANELS (3) TO THE RESPECTIVE UV UNIT. CONTRACTOR SHALL INSTALL UV CONTROL PANEL FURNISHED POWER CABLE WITHIN (1) 1-1/4"C AND UV CONTROL PANEL FURNISHED MONITORING AND CONTROL CABLE IN THE OTHER 1-1/4"C. CONTRACTOR SHALL COORDINATE UPSIZING THE CONDUIT OR REMOVAL AND REINSTALLATION OF THE CABLE END CONNECTOR TO FACILITATE CABLE INSTALLATION WITHIN THE CONDUITS.
2. FINAL CONNECTION TO THE UV UNIT SHALL BE BY QUALIFIED FACTORY TRAINED TECHNICIANS DURING THE SYSTEM STARTUP AND COMMISSIONING.

POWER DRAWING NOTES:

1. WIRING IS SHOWN ON DRAWINGS ONLY FOR SPECIFIC ROUTING OR SPECIAL CONDITIONS.
2. WIRING AND CONDUIT SHALL BE REQUIRED BETWEEN ALL OUTLETS AND PANELS INDICATED WITH CIRCUIT NUMBERS AND PANEL DESIGNATIONS.
3. ALTHOUGH BRANCH CIRCUIT WIRING AND CONDUIT IS NOT SHOWN, IT IS THE INTENT OF THESE DOCUMENTS THAT A COMPLETE BRANCH CIRCUIT WIRING SYSTEM BE INSTALLED.
4. MINIMUM WIRE SIZE SHALL BE NO. 12 AWG FOR POWER AND LIGHTING CIRCUITS AND NO. 14 AWG FOR CONTROL WIRING. 120V BRANCH CIRCUITS OF MORE THAN 100 FEET AND 277V CIRCUITS OF MORE THAN 150 FEET FROM CENTER OF LOAD TO PANEL SHALL BE #10 AWG.
5. ALL SWITCH CONTROLS SHALL BE PROVIDED WITH WIRING AND CONDUIT AS REQUIRED.
6. ALL BRANCH CIRCUIT CONDUCTORS SHALL BE 98% CONDUCTIVITY, COPPER MINIMUM #12 AWG SIZE, THWN/THHN INSULATION, 600 VOLTS RATED, UNLESS OTHERWISE NOTED.

COPYRIGHT 2015 WESTON & SAMPSON

Weston&Sampson®
273 Dividend Road, Rocky Hill, CT 06067
(860) 513-1473 (800) SAMPSON
www.westonandsampson.com

No.	Date	Dr.By	Ck.By	App.By	Description	DATE
1	03/03/16	DNM	RFM	RFM	ADDENDUM NO.1	

A P P R O V E D

REGISTERED PROFESSIONAL ENGINEER

TOWN OF GREENWICH – DEPARTMENT OF PUBLIC WORKS
RITCH AVENUE WEST, GREENWICH, CONNECTICUT
BYRAM PARK POOL REPLACEMENT

ELECTRICAL FILTER BUILDING PLAN

CADD NO.	CONTRACT:	JOB NO.	DR.BY	DSN.BY	CHK.BY	APP.BY
–		21303336	DNM	DNM	RFM	RFM
SCALE: AS NOTED						

E3.03

FILE NO. –

SHEET – OF

Z:\CT-Rockyhill-Projects\Greenwich CT\Greenwich Parks and Recreation\Byram Park\CAD\MEP\Electrical\E303 Electrical Filter Building Plans.dwg

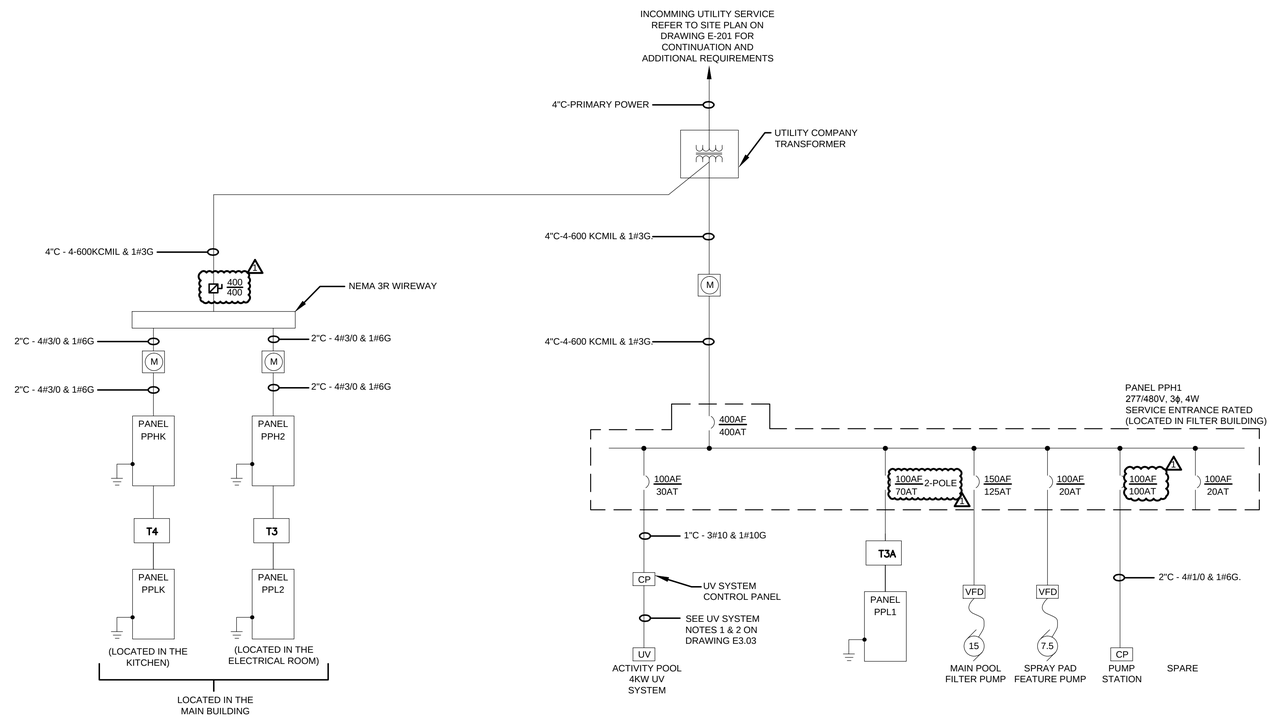

ONE LINE DIAGRAM

SCALE: N.T.S

DRY TYPE TRANSFORMER SCHEDULE								
SIZE	KVA	PRIMARY AMPS	SECONDARY AMPS	480 VOLT (2) OVERCURRENT	208 VOLT (3) OVERCURRENT	480V PRIMARY FEEDER	120/208V SECONDARY FEEDER	GROUNDING (4) CONDUCTOR
T1	9	11	25	20A, 3P	30A, 3P	3#12 & 1#12G - 3/4"C.	4#10 & 1#10G - 3/4"C.	1#8 - 3/4"C
T2	15	18	42	30A, 3P	50A, 3P	3#10 & 1#10G - 3/4"C.	4#6 & 1#8G - 1"C.	1#8 - 3/4"C
T3	30	36	83	60A, 3P	100A, 3P	3#4 & 1#10G - 1"C.	4#1 & 1#6G - 1 1/2"C.	1#6 - 3/4"C
T3A	25	52	104	70A-2P	150A, 2P	3#4 & 1#10G - 1"C.	3#1/0 & 1#6G - 2"C.	1#6 - 3/4"C
T4	45	54	125	80A, 3P	150A, 3P	3#3 & 1#8G - 1 1/4"C.	4#1/0 & 1#6G - 2"C.	1#6 - 3/4"C
T5	75	90	208	150A, 3P	250A, 3P	3#1/0 & 1#6G - 1 1/2"C.	4#250KCMIL & 1#2G - 3"C.	1#2 - 3/4"C
T6	112.5	135	313	250A, 3P	400A, 3P	3#250KCMIL & 1#4G - 2 1/24"C.	4#500KCMIL & 1#1/0G - 4"C.	1#1/0 - 3/4"C

TRANSFORMER SCHEDULE NOTES:

1. ALL PHASE AND NEUTRAL CONDUCTOR SIZES ARE BASED ON COPPER CONDUCTORS PER N.E.C. TABLE 310-16.
2. MANUFACTURERS SELECTION FOR THE TYPE OF PRIMARY BREAKER (THERMAL MAGNETIC VS. SOLID STATE) SHALL ENSURE COORDINATION WITH TRANSFORMER IN-RUSH CURRENT. IF MIS COORDINATION IS IDENTIFIED BY THE COORDINATION STUDY, THE MANUFACTURER SHALL REPLACE THE DEVICE WITH A DEVICE THAT WILL PROPERLY COORDINATE, AT NO ADDITIONAL COST.
3. SECONDARY OVERCURRENT PROTECTION SHALL BE LOCATED WITHIN A PANELBOARD (MAIN BREAKER) OR INDIVIDUALLY MOUNTED CIRCUIT BREAKER. THE SECONDARY OVERCURRENT PROTECTION DEVICE SHALL BE LOCATED SUCH THAT THE MAXIMUM LENGTH OF SECONDARY CONDUCTORS DO NOT EXCEED 10'-0".
4. THE GROUNDING ELECTRODE CONDUCTOR SHALL BE UNSPLICED AND INSTALLED AS OPEN WIRING OR RUN IN NON METALLIC (PVC SCHEDULE 40) CONDUIT TO PROTECT IT FROM SEVERE DAMAGE.

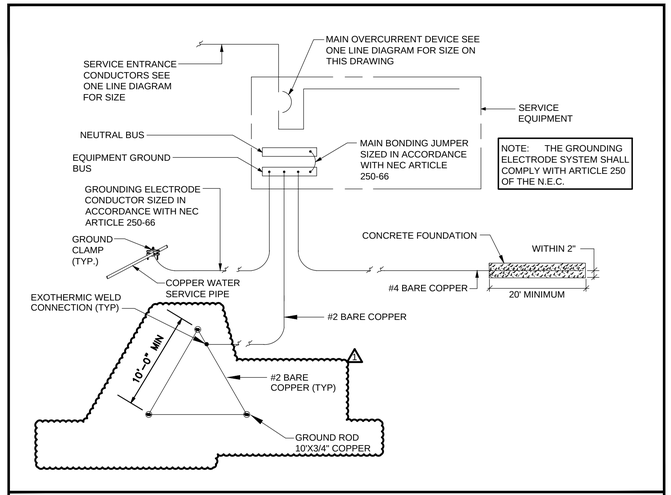

SERVICE GROUNDING DETAIL

SCALE: N.T.S

COPYRIGHT 2015 WESTON & SAMPSON

Weston&Sampson®
273 Dividend Road, Rocky Hill CT 06067
(860) 513-1473 (800) SAMPSON
www.westonandsampson.com

No.	Date	Dr.By	Ck.By	App.By	RFM	DNM	RFM	03/03/16	1

ADDENDUM NO.1

No.	Description	DATE
	APPROVED	

REGISTERED PROFESSIONAL ENGINEER

TOWN OF GREENWICH – DEPARTMENT OF PUBLIC WORKS
RITCH AVENUE WEST, GREENWICH, CONNECTICUT
BYRAM PARK POOL REPLACEMENT

ELECTRICAL ONE LINE DIAGRAM

CADD NO.	SCALE:	CONTRACT:	JOB NO.	DR.BY	DSN.BY	CHK.BY	APP.BY
–	NONE		21303336	DNM	DNM	RFM	RFM

E4.00

FILE NO. –

SHEET – OF

Z:\CT-Rocky Hill-Projects\Greenwich CT\Greenwich Parks and Recreation\Byram Park\CAD\WEP\Electrical\E4.00 Electrical One Line Diagram.dwg

LIGHTING FIXTURE SCHEDULE

TYPE	DESCRIPTION	MANUFACTURER	CATALOG NUMBER	LAMP NO.	LAMP TYPE	MOUNTING	VOLTAGE	REMARKS
A	4' INDUSTRIAL POLYCARBONATE DAMP LOCATION LISTED LED FIXTURE	COOPER/METALUX	4SNLED-LD4-36SL-UNV-L835-CD1-U	1	3603 LUMENS,28W 3500K LED	CEILING SURFACE	120	
B	4' ENCLOSED AND GASKETED WET LOCATION LISTED LED FIXTURE	COOPER/METALUX	4WNLED-LD1-41 -F-UNV-L835-CD1-U	1	4100 LUMENS,48W 3500K LED	CEILING SURFACE	120	
C	6" LED RECESSED SHOWER LIGHT FIXTURE	COOPER/HALO	SLD612835WH	1	1200 LUMENS,15W 3500K LED	CEILING SURFACE	120	
D	4' ENCLOSED AND GASKETED WET LOCATION LISTED LED KITCHEN FIXTURE	COOPER/METALUX	4VT2-LD4-4-DR-UNV-L840-CD1-WL-U	1	4000 LUMENS,38W 3500K LED	CEILING SURFACE	120	
S	EXTERIOR WALL PACK	COOPER/LUMARK LIGHTING	#LD-WP-FC-4A-120V-WG/WPFC	1	4000 LUMENS, 3500K LED	WALL SURFACE	120	
C1	6" LED RECESSED SHOWER LIGHT FIXTURE	COOPER/HALO	SLD612835WH	1	1200 LUMENS,15W 3500K LED	CEILING SURFACE	120	
S1	MARINE OVAL BULKHEAD WALL LIGHT	DESTINATION LIGHTING	#305014BK	1	60W	WALL SURFACE	120	
E	EXIT LIGHT	COOPER/ISOLITE	#RL-EM-R-WW	1	LED	WALL SURFACE	120	
EB	EMERGENCY BATTERY UNIT	COOPER/ISOLITE	#RL2-LED-2-WH	2	LED	WALL SURFACE	120	

LIGHTING FIXTURE SCHEDULE REQUIREMENTS

1. FURNISH AND INSTALL ALL MATERIALS, ACCESSORIES AND OTHER EQUIPMENT NECESSARY FOR THE COMPLETE AND PROPER INSTALLATION OF ALL LIGHTING FIXTURES INCLUDED IN THIS CONTRACT. PROVIDE ALL NECESSARY ACCESSORIES AS NECESSARY TO PROVIDE A COMPLETE LIGHTING SYSTEM.
2. SPECIFICATIONS AND DRAWINGS ARE INTENDED TO CONVEY THE FEATURES, FUNCTION AND CHARACTER OF THE FIXTURES ONLY, AND DO NOT UNDERTAKE TO SPECIFY EVERY ITEM OR DETAIL NECESSARY. MINOR DETAILS NECESSARY FOR THE PROPER EXECUTION AND COMPLETION OF THE LIGHTING SYSTEM NOT INDICATED ON THE DRAWINGS NOR SPECIFIED SHALL BE PROVIDED AS IF THEY WERE SPECIFIED HERE OR INDICATED ON THE DRAWINGS.
3. FIXTURES SUBSTITUTIONS (FROM MANUFACTURERS OTHER THAN THOSE LISTED) SHALL BE EQUAL IN ALL RESPECTS OF PERFORMANCE, QUALITY OF CONSTRUCTION, SUITABILITY TO PROJECT CONDITIONS AND APPEARANCE OF THE SPECIFIED FIXTURE. SUBSTITUTIONS SHALL BE SUBMITTED FOR APPROVAL IN THE FORM OF CATALOG CUTS OR DETAIL DRAWINGS.
4. THE ELECTRICAL CONTRACTOR SHALL COORDINATE THE LIGHTING FIXTURE INSTALLATION WITH THE DETAILS OF THE ARCHITECTURAL, STRUCTURAL, ELECTRICAL, MECHANICAL AND OTHER RELATED TRADES TO ASSURE AN EFFICIENT INSTALLATION.
5. INSTALL EACH FIXTURE PROPERLY AND SAFELY. PROVIDE NECESSARY STRUCTURAL SUPPORTS WHERE REQUIRED FOR THE SAFE ATTACHMENT OF ALL LIGHTING FIXTURES. FURNISH AND ERECT HANGERS, RODS, MOUNTING BRACKETS, SUPPORTS AND OTHER EQUIPMENT REQUIRED. COORDINATE CONDUIT ENTRY LOCATIONS WITH FIXTURE MANUFACTURERS PRIOR TO ROUGHING. ALL LIGHTING FIXTURES ARE TO BE INDEPENDENTLY SUPPORTED FROM THE STRUCTURE BY MEANS OF JACK CHAIN, THREADED ROD OR OTHER ENGINEER APPROVED METHODS.
6. INSTALL PENDANT LIGHTING FIXTURES PLUMB AND TRUE, AT THE HEIGHT FROM THE FLOOR SPECIFIED ON THE DRAWINGS. IN CASES WHERE CONDITIONS MAKE THIS IMPRACTICAL, REFER TO THE ARCHITECT FOR A DECISION. USE BALL ALIGNERS AND CANOPIES ON PENDANT FIXTURES UNLESS NOTED OTHERWISE. RIGIDLY ALIGN CONTINUOUS ROWS OF LIGHTING FIXTURES FOR TRUE IN-LINE APPEARANCE. SUPPORT ALL LIGHTING FIXTURES INDEPENDENTLY OF DUCT WORK OR PIPING. WHENEVER A FIXTURE OR ITS HANGER CANOPY IS APPLIED TO A SURFACE MOUNTED OUTLET BOX, PROVIDE A FINISHING RING TO CONCEAL THE OUTLET BOX.
7. EFFECTIVELY PROTECT ALL LIGHTING EQUIPMENT AGAINST DAMAGE FROM THE TIME OF FABRICATION TO FINAL ACCEPTANCE OF THE WORK. INSTALL REFLECTOR CONES, BAFFLES, APERTURE PLATES, LIGHT CONTROLLING ELEMENT FOR AIR HANDLING FIXTURES, AND DECORATIVE ELEMENTS AFTER COMPLETION OF CEILING TILES, PAINTING AND GENERAL CLEANUP. REPLACE BLEMISHED, DAMAGED OR UNSATISFACTORY FIXTURES AS DIRECTED.

PANELBOARD SCHEDULE (MAIN BUILDING)

DESIGNATION: PPL2 — S.C. RATING: 10,000 A RMS SYSTEM — REMARKS:
LOCATION: MAIN BUILDING — SERVICE: 120/208V, 3Ø, 4W
RATING: 100 AMPS — MOUNTING: SURFACE
MAIN: 100 AMP MCB

CKT. NO.	LOAD DESIGNATION	CONN. LOAD (KVA)	BREAKER TRIP	BREAKER TRIP	CONN. LOAD (KVA)	LOAD DESIGNATION	CKT. NO.
1	INTERIOR LIGHTING		20	20		RECPETACLE ELECTRICAL ROOM	2
3	INTERIOR LIGHTING		20	20		JANITOR CLOSET RECEPTACLES	4
5	EXTERIOR LIGHTING		20	20		LOCKER ROOM RECEPTACLES	6
7	ENTRY GATE LIGHTING AND RECEPTACLE		20	20		EXTERIOR RECEPTACLES	8
9	JANITOR CLOSET RECEPTACLES		20	20		EXTERIOR RECEPTACLES	10
11	TOILET ROOM RECEPTACLES		20	20		LIFEGAURD ROOM RECEPTACLES	12
13	LOCKER ROOM RECEPTACLES		20	20		DRINKING FOUNTAIN	14
15	EF-1		20	20		EF-2	16
17	ACCU-1		20	20		ACCU-2	18
19			-	-			20
21	POOL VAC		20	20		WADING POOL AUTO FILL CONTROLLER	22
23	DRINKING FOUNTAIN		20	20		SPLASH PAD AUTO FILL CONTROLLER	24
25	SPARE		20	20		SPLASH PAD SMART CONTROLLER	26
27	SPARE		20	20		SPARE	28
29	SPARE		20	20		SPARE	30
31	SPARE		20	20		SPARE	32
33	SPARE		20	20		SPARE	34
35	SPARE		20	20		SPARE	36
37	SPARE		20	20		SPARE	38
39	SPARE		20	20		SPARE	40
41	SPARE		20	20		SPARE	42

PANELBOARD SCHEDULE (MAIN BUILDING)

DESIGNATION: PPH2 — S.C. RATING: 10,000 A RMS SYSTEM — REMARKS: SERVICE ENTRANCE RATED
LOCATION: MAIN BUILDING — SERVICE: 277/480V, 3Ø, 4W
RATING: 200 AMPS — MOUNTING: SURFACE
MAIN: 200 AMP MCB

CKT. NO.	LOAD DESIGNATION	CONN. LOAD (KVA)	BREAKER TRIP	BREAKER TRIP	CONN. LOAD (KVA)	LOAD DESIGNATION	CKT. NO.
1	-		-	-		-	2
3	PANEL PPL1		60	50		ELECTRIC WATER HEATER	4
5	-		-	-		-	6
7	SPARE		20	-		-	8
9	SPARE		20	50		ELECTRIC WATER HEATER	10
11	SPARE		20	-		-	12
13	SPARE		20	20		SPARE	14
15	SPARE		20	20		SPARE	16
17	SPARE		20	20		SPARE	18
19	SPARE		20	20		SPARE	20
21	SPARE		20	20		SPARE	22
23	SPARE		20	20		SPARE	24
25	SPARE		20	20		SPARE	26
27	SPARE		20	20		SPARE	28
29	SPARE		20	20		SPARE	30

PANELBOARD SCHEDULE (FILTER BUILDING)

DESIGNATION: PPL1 — S.C. RATING: 10,000 A RMS SYSTEM — REMARKS:
LOCATION: ELECTRICAL ROOM — SERVICE: 120/240V, 1Ø, 3W
RATING: 200 AMPS — MOUNTING: SURFACE
MAIN: 150 AMP MCB

CKT. NO.	LOAD DESIGNATION	CONN. LOAD (KVA)	BREAKER TRIP	BREAKER TRIP	CONN. LOAD (KVA)	LOAD DESIGNATION	CKT. NO.
1	LIGHTING		20	20		SUMP PUMP	2
3	GENERAL RECEPTACLES		20	20		MAIN POOL CHEMICAL CONTROLLER	4
5	MAIN POOL FILTER CONTROL PANEL		20	20		WADING POOL CHEMICAL CONTROLLER	6
7	WADING POOL FILTER CONTROL PANEL		20	20		SPRAY DECK CHEMICAL CONTROLLER	8
9	SPRAY DECK FILTER CONTROL PANEL		20	20		WADING POOL UV CONTROLLER	10
11	SPRAY DECK UV CONTROLLER		20			-	12
13	-		-	20		TABLET	14
15	SPRAY DECK FILTER PUMP		20	20		TABLET	16
17	-		-	20		TABLET	18
19	SPARE			20		DRINKING FOUNTAIN	20
21	WADING POOL FILTER PUMP		20	20		OUTDOOR RECEPTACLES	22
23	-		-	20		EF-3	24
25	SPARE		20	20		SPARE	26
27	SPARE		20	20		SPARE	28
29	TABLET BOOSTER PUMP		20	20		CO2 CONTROLLER	30
31	-		-	20		CO2 CONTROLLER	32
33	TABLET BOOSTER PUMP		20	20		CO2 CONTROLLER	34
35	-		-	20		SPARE	36
37	TABLET BOOSTER PUMP		20	20		SPARE	38
39	-		-	20		SPARE	40
41	SPARE		20	20		SPARE	42
43	SPARE		20	20		SPARE	44
45	SPARE		20	20		SPARE	46
47	SPARE		20	20		SPARE	48
49	SPARE		20	20		SPARE	50
51	SPARE		20	20		SPARE	52
53	SPARE		20	20		SPARE	54
55	SPARE		20	20		SPARE	56
57	SPARE		20	20		SPARE	58
59	SPARE		20	20		SPARE	60

MECHANICAL EQUIPMENT SCHEDULE

DESIGNATION	DESCRIPTION	PANEL/ CIRCUIT	CIRCUIT BREAKER	FEEDER	VOLT	Ø	FLA	MCA	HP	KVA	Sm	φ	~	□	⊘	⊠	VFD	DEVICE RATINGS
ACCU-1	SPLIT SYSTEM AIR CONDITIONING UNIT - OUTDOOR UNIT	PPL2-17,19	20A-2P	1/2"C. - 2#12 & 1#12 GND	240	1	0.93	17.1							X			
AC-1	SPLIT SYSTEM AIR CONDITIONING UNIT - INDOOR UNIT	ACCU-1	20A-1P	1/2"C. - 2#12 & 1#12 GND	120	1	0.79	1			X							POWERED FROM ACCU-1
ACCU-2	SPLIT SYSTEM AIR CONDITIONING UNIT - OUTDOOR UNIT	PPL2-18,20	20A-2P	1/2"C. - 2#12 & 1#12 GND	240	1	0.56	12							X			
AC-2	SPLIT SYSTEM AIR CONDITIONING UNIT - INDOOR UNIT	ACCU-2	20A-1P	1/2"C. - 2#12 & 1#12 GND	120	1	0.76	1			X							POWERED FROM ACCU-1
ACCU-3	SPLIT SYSTEM AIR CONDITIONING UNIT - OUTDOOR UNIT	PPLK-23,25	20A-2P	1/2"C. - 2#12 & 1#12 GND	240	1	0.74	18	1/8						X			
AC-3	SPLIT SYSTEM AIR CONDITIONING UNIT - INDOOR UNIT	PPHK-8,10,12	20A-3P	1/2"C. - 3#12 & 1#12 GND	480	3			1/3						X			
EF-1	EXHAUST FAN	PPL2-15	20A-1P	1/2"C. - 2#12 & 1#12 GND	120	1	11.3		.75		X							
EF-2	EXHAUST FAN	PPL2-16	20A-1P	1/2"C. - 2#12 & 1#12 GND	120	1	11.3		.75		X							
KEF-1	KITCHEN EXHAUST FAN	PPHK-7,9,11	20A-3P	1/2"C. - 3#12 & 1#12 GND	480	3	2.1		1						X			
MAU-1	MAKE-UP AIR UNIT	PPHK-2,4,6	20A-3P	1/2"C. - 3#12 & 1#12 GND	480	3		4.1	1.5						X			

MECHANICAL EQUIPMENT SCHEDULE NOTES:

1. STARTERS (FVNR, VFD, RVNR, ETC..) SHALL BE FURNISHED AND INSTALLED BY MECHANICAL CONTRACTORS AND WIRED BY ELECTRICAL CONTRACTOR. FOR EXACT LOCATIONS REFER TO MECHANICAL DRAWINGS.
2. E.C. SHALL COORDINATE FUSE SIZE AND OVERCURRENT PROTECTION FOR ALL MECHANICAL EQUIPMENT W/ MANUFACTURER'S RECOMMENDATION

COPYRIGHT 2015 WESTON & SAMPSON

Weston&Sampson®
273 Dividend Road, Rocky Hill, CT 06067
(860) 513-1473 (800) SAMPSON
www.westonandsampson.com

No.	Date	Dr.By	Ck.By	App.By	Description
1	03/03/16	DNM	RFM	RFM	ADDENDUM NO.1

APPROVED — DATE
REGISTERED PROFESSIONAL ENGINEER

STATE OF CONNECTICUT ★ ROBERT F. McALEER No. 22067 LICENSED PROFESSIONAL ENGINEER
3/3/2016

TOWN OF GREENWICH – DEPARTMENT OF PUBLIC WORKS
RITCH AVENUE WEST, GREENWICH, CONNECTICUT
BYRAM PARK POOL REPLACEMENT

ELECTRICAL SCHEDULES

SCALE:	CONTRACT:	JOB NO.	DR.BY	DSN.BY	CHK.BY	APP.BY
NONE		2130336	DNM	DNM	RFM	RFM

CADD NO. –
FILE NO. –

E5.00

SHEET – OF

Z:\CT-RockyHill-Projects\Greenwich CT\Greenwich Parks and Recreation\Byram Park\CAD\MEP\Electrical\E5.00 Electrical Schedules.dwg

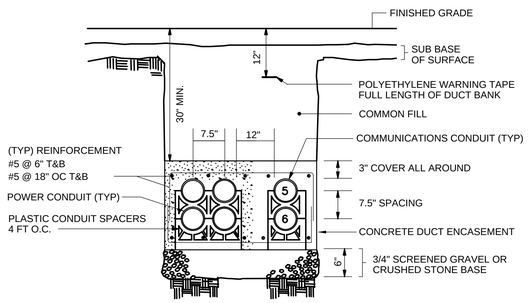

1 TYPICAL CONCRETE ENCASED DUCTBANK DETAIL — NO SCALE

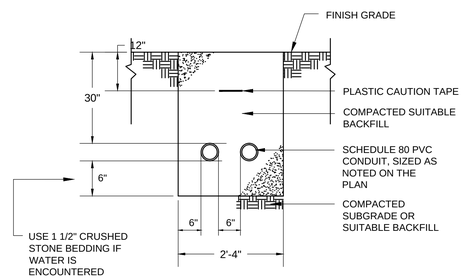

2 TYPICAL DIRECT BURIED CONDUIT DETAIL — NO SCALE

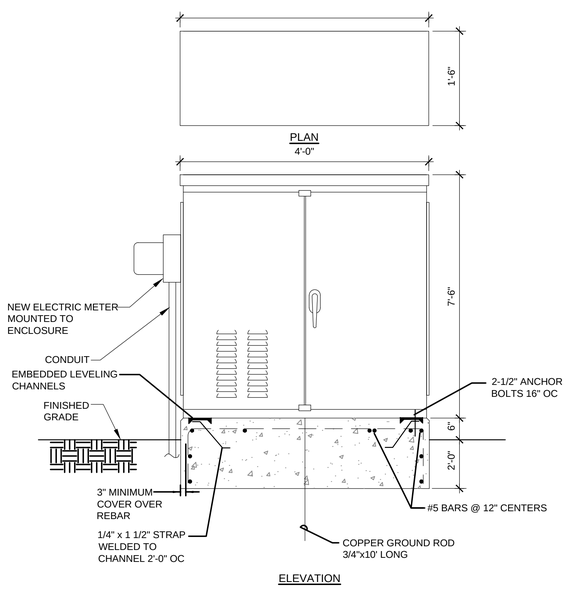

7 TYPICAL PAD MOUNTED ELECTRICAL ENCLOSURE — NO SCALE

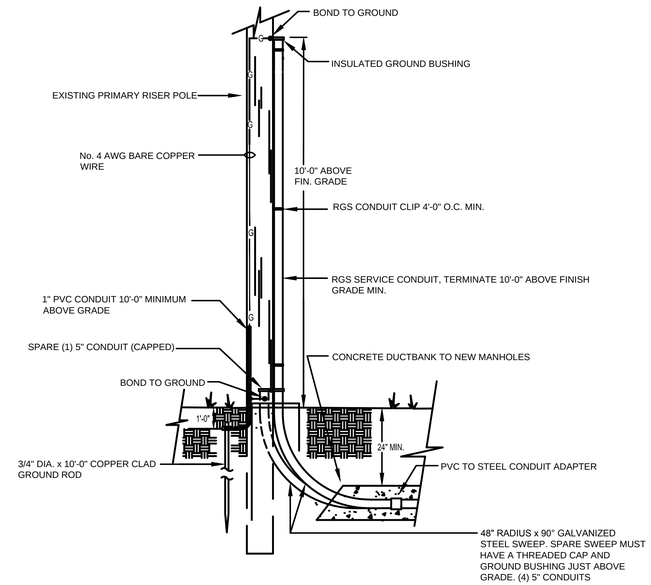

3 TYPICAL RISER POLE DETAIL — NO SCALE

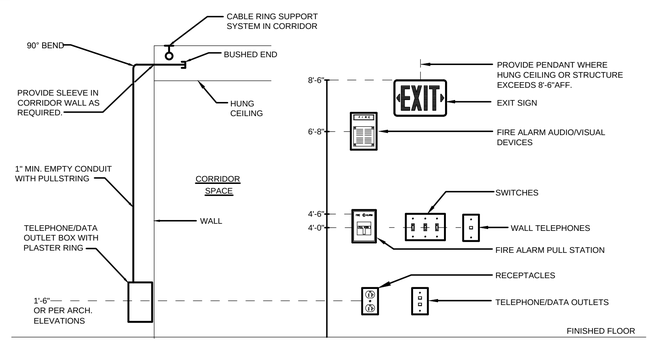

NOTES:

1. ALL MOUNTING HEIGHTS SHALL BE MEASURED FROM FINISHED FLOOR TO CENTERLINE OF DEVICE EXCEPT EXIT SIGNS.
2. DEVICES SHALL BE INSTALLED ON A COMMON VERTICAL CENTERLINE WHEREVER POSSIBLE.
3. ALL DEVICES SHALL BE INSTALLED AT MOUNTING HEIGHTS AS INDICATED ON THIS DETAIL UNLESS OTHERWISE NOTED ON ARCH. ELEVATIONS & DETAILS.

4 TYPICAL DEVICE MOUNTING HEIGHT DETAIL — NO SCALE

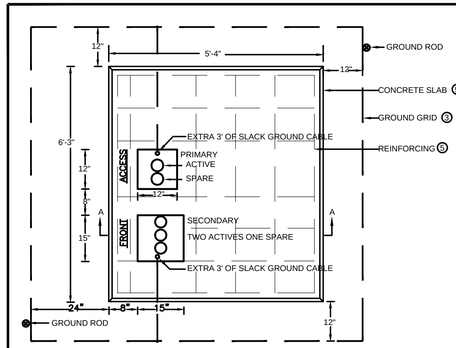

PADMOUNT - FOUNDATION

1. SCOPE - THIS STANDARD COVERS SPECIFICATIONS FOR THE CONSTRUCTION OF PADMOUNT TRANSFORMER FOUNDATIONS AND GROUNDING.
2. CONDUIT - INSTALL AS SHOWN BEFORE SLAB IS POURED. USE 36" RADIUS BENDS, WITH COUPLINGS, NIPPLES AND BUSHINGS AS REQUIRED. (MATERIAL MAY BE GALVANIZED STEEL, BLACK IRON, OR TYPE II FIBER OR PLASTIC.) TERMINATIONS OF CONDUITS SHALL BE LOCATED EXACTLY AS SHOWN, SOLID OR DOTTED, DEPENDING UPON NUMBER OF DUCTS.

   THE NIPPLE AND BUSHING SHOULD BE INSTALLED AFTER THE TRANSFORMER IS PLACED AND BEFORE THE CABLES ARE PULLED.
3. GROUND GRID - INSTALL #1/0 S.D. 7 STRAND BARE COPPER WIRE LOOP 1'-0" BELOW GRADE. BOND TO ALL EXPOSED METALLIC CONDUIT AND LEAVE 3'-0" OF WIRE ABOVE PAD FOR GROUNDING TRANSFORMER AT TWO OPPOSITE POINTS IN THE CABLE CONDUIT OPENINGS.

   PHOS-COPPER BRAZE CONNECTIONS, CADWELD, OR USE TWO APPROVED CONNECTORS PER JOINT. INSTALL TWO 8 FT. GALVANIZED STEEL (3/4") GROUND RODS WHERE SHOWN. LEAVE GRID EXPOSED UNTIL INSPECTED BY THE UTILITY COMPANY.
4. GRAVEL & SAND - SHALL BE PLACED AS SHOWN IN FIGS. 1 AND 2; THE GRAVEL BEING COMPACTED AND THE SAND THOROUGHLY WETTED JUST BEFORE PLACING THE CONCRETE.
5. CONCRETE SLAB - INSTALL 2000 LB. CONCRETE IN ACCORDANCE WITH UTILITY COMPANY REQUIREMENTS. REINFORCE WITH 1/2" RODS LOCATED AS SHOWN AND IN THE MIDDLE OF THE SLAB.

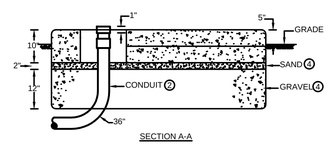

5 PAD MOUNTED TRANSFORMER DETAIL — NO SCALE

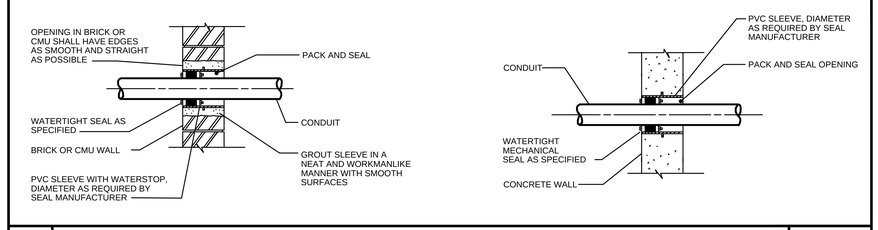

6 WATERTIGHT CONDUIT PENETRATIONS — NO SCALE

NOTE:
ELECTRICAL MANHOLE COVERS SHALL BE CAST WITH AN 'E' CENTERED ON COVER.

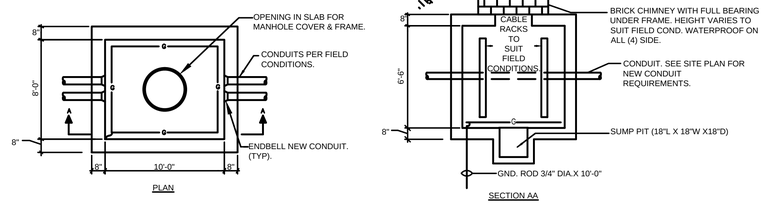

8 MANHOLE DETAIL — NO SCALE

COPYRIGHT 2015 WESTON & SAMPSON

Weston&Sampson®
273 Dividend Road, Rocky Hill, CT 06067
(860) 513-1473 (800) SAMPSON
www.westonandsampson.com

No.	Date	Dr.By	Ck.By	App.By	Description
1	03/03/16	DNM	RFM	RFM	ADDENDUM NO.1

APPROVED — DATE

REGISTERED PROFESSIONAL ENGINEER

3/3/2016

TOWN OF GREENWICH – DEPARTMENT OF PUBLIC WORKS
RITCH AVENUE WEST, GREENWICH, CONNECTICUT
BYRAM PARK POOL REPLACEMENT

ELECTRICAL DETAILS

CADD NO.	SCALE:	CONTRACT:	JOB NO.	DR.BY	DSN.BY	CHK.BY	APP.BY
–	NONE		2130336	DNM	DNM	RFM	RFM

FILE NO. –

E6.00

SHEET – OF

Z:\CT-Rocky Hill-Projects\Greenwich CT\Greenwich Parks and Recreation\Byram Park\CAD\MEP\Electrical\E6.00 Electrical Details.dwg

PROCESS GENERAL NOTES

1. FOR PIPING MATERIAL, REFER TO THE PIPE SCHEDULE ON THIS SHEET.
2. INSTALL CORPORATION COCKS ON ALL BUILDING AND STRUCTURE INTERIOR PIPING HIGH POINTS TO PREVENT AIR BINDING. DETERMINE EXACT NUMBER AND LOCATIONS OF THESE CORPORATION COCKS BASED UPON INFORMATION DEPICTED ON DRAWINGS AND ACTUAL FIELD ROUTING OF PIPING. THESE MANUAL AIR RELEASES SHALL INCLUDE A 1/2 INCH CPVC CORPORATION COCK WITH 1/2 INCH CPVC TUBING ADEQUATELY SUPPORTED, EXTENDING TO A LOCAL AREA DRAIN. ROUTING OF TUBING AND SELECTED DRAIN TO BE REVIEWED WITH, AND ACCEPTED BY, ENGINEER.
3. PIPES 3–INCHES OR LESS IN DIAMETER SHALL HAVE UNIONS INSTALLED ADJACENT TO EQUIPMENT, FITTINGS AND TANKS, UNLESS OTHERWISE NOTED ON DRAWINGS. FLANGES ARE ACCEPTABLE ON 3–INCH OR LARGER DIAMETER PIPING.
4. ALL PIPES SHALL BE ADEQUATELY RESTRAINED AND SUPPORTED.
5. AFTER INSTALLATION, ALL PRESSURE (PUMPED) PIPELINES SHALL BE PRESSURE TESTED FOR TIGHTNESS AT 150 PSIG. ALL LEAKS SHALL BE CORRECTED AND RETESTED UNTIL PRESSURE TEST IS SATISFACTORILY COMPLETED.
6. ALL PIPING SHALL BE CLEANED BEFORE TESTING.
7. PROVIDE REINFORCED CONCRETE PAD UNDER ALL EQUIPMENT, CONTROL PANELS, PIPE AND EQUIPMENT SUPPORTS, TANKS, ETC. UNLESS OTHERWISE INDICATED (SEE DETAIL).
8. ALL EQUIPMENT AND PIPING LAYOUT DIMENSIONS SHALL BE FIELD VERIFIED AND COORDINATED WITH EQUIPMENT SUPPLIED, AND/OR EXISTING CONDITIONS.
9. DO NOT SCALE DISTANCES OR DIMENSIONS FROM THE DRAWINGS. WRITTEN DIMENSIONS SHALL PREVAIL. REPORT ANY DISCREPANCIES IMMEDIATELY.
10. PROVIDE OVERSIGHT AND COORDINATION OF SUBCONTRACTORS AND TRADE DISCIPLINES.
11. ALL MECHANICAL EQUIPMENT PIPING AND VALVES SHALL BE LAID TO SCALE IN THE FIELD OR ELECTRONICALLY BY AN EQUIPMENT VENDOR PRIOR TO PURCHASE OF EQUIPMENT, CORING PIPE PENETRATIONS OR ROUTING MECHANICAL EQUIPMENT TO CONFIRM THERE ARE NO CONFLICTS AND MECHANICAL EQUIPMENT WILL FIT IN THE ALLOCATED SPACE.
12. PROVIDE A COMPLETE AND FUNCTIONAL SYSTEM AS SHOWN ON THE DRAWINGS AND AS OUTLINED IN THE SPECIFICATIONS. THE DETERMINATION OF COMPLETE AND FUNCTIONAL SHALL BE AT THE SOLE DISCRETION OF THE ENGINEER. THE ENGINEER SHALL MAKE THIS DETERMINATION IN THE FIELD BASED ON ACTUAL FIELD CONDITIONS.
13. MATERIALS AND WORKMANSHIP FURNISHED UNDER THIS CONTRACT SHALL BE A STANDARD, HIGH–GRADE QUALITY, AND OF THE BEST WORKMANSHIP AND DESIGN. ALL LIKE PARTS OF EQUIPMENT OF THE SAME SIZE OR CAPACITY SHALL BE INTERCHANGEABLE. SUITABLE PROVISION SHALL BE MADE FOR EASY ADJUSTMENT OR REPLACEMENT OF ALL PARTS REQUIRING ADJUSTMENT OR REPLACEMENT.
14. IT IS NOT THE INTENT OF THESE DRAWINGS TO PORTRAY EVERY DETAIL OF THE REQUIRED WORK. PROVIDE THE EQUIPMENT AND SYSTEMS COMPLETE SO THAT WHEN ASSEMBLED AND INSTALLED THEY SHALL OPERATE AND PERFORM AS DESCRIBED HEREIN.
15. ALL MECHANICAL AND ELECTRICAL LAYOUTS ARE GENERALLY DIAGRAMMATIC AS SHOWN ON THESE DRAWINGS. THE WORK OF THE VARIOUS TRADES SHALL BE COORDINATED TO AVOID INTERFERENCE AND TO SECURE MAXIMUM HEAD ROOM. PARTICULAR ATTENTION IS DRAWN TO CONGESTED SPACES INSIDE AND OUTSIDE OF THE STRUCTURES. IN THE INTEREST OF COORDINATION AND EXPEDIENCY, IT BECOMES NECESSARY TO DEVELOP "INTERFERENCE DRAWINGS" (DEFINED AS DRAWINGS EMBODYING THE WORK OF TRADES INVOLVED, ILLUSTRATING DETAILS OR CONSTRUCTION PROPOSED AND ARRANGEMENT OF ACTUAL EQUIPMENT AND APPARATUS PURCHASED). SUCH DRAWINGS SHALL BE PREPARED AND SHALL BE COORDINATED WITH OTHER TRADES.
16. THE INSTALLATION OF FACILITIES AND APPURTENANT WORK SHALL BE PROVIDED IN ACCORDANCE WITH THE REQUIREMENTS OF ALL FEDERAL, STATE, AND MUNICIPAL CODES AND REGULATIONS GOVERNING THE WORK. IN INSTANCES WHERE THE REQUIREMENT OF DRAWINGS AND SPECIFICATIONS ARE IN EXCESS OF THE REQUIREMENTS OF THE APPLICABLE CODES AND REGULATIONS, AND ARE PERMITTED THEREUNDER, THEN THE REQUIREMENTS OF THE CONTRACT DOCUMENTS SHALL GOVERN.
17. ALL EQUIPMENT DRIVEN BY OPEN SHAFTS, BELTS, CHAINS, OR GEARS SHALL BE PROVIDED WITH APPROVED ALL–METAL GUARDS ENCLOSING THE DRIVE MECHANISM AND MOVING PARTS. GUARDS SHALL BE CONSTRUCTED OF GALVANIZED SHEET STEEL OR GALVANIZED ONE–INCH MESH SCREEN (WOVEN WIRE OR EXPANDED METAL) SET IN A FRAME OF GALVANIZED STEEL MEMBERS, UNLESS OTHERWISE DESCRIBED IN THE TECHNICAL SPECIFICATIONS FOR THE PARTICULAR EQUIPMENT. GUARDS SHALL BE SECURED IN POSITION BY STEEL BRACES OR STRAPS WHICH WILL PERMIT EASY REMOVAL FOR SERVICING OF THE THE EQUIPMENT. WHERE SAFETY CODES OR REGULATIONS ARE APPLICABLE, THE GUARDS SHALL CONFORM THERETO IN ALL RESPECTS.
18. ENSURE THAT ALL GREASE FITTINGS ON ALL PIECES OF EQUIPMENT FURNISHED UNDER THIS CONTRACT ARE STANDARDIZED SO THAT ONLY THE ALEMITE BUTTON–HEAD TYPE OF FITTING IS USED. FITTINGS SHALL BE STANDARD OR GIANT SIZE ACCORDING TO THE TYPE OF SERVICE PERFORMED.
19. UNLESS OTHERWISE SPECIFIED, NEAT BRASS PLATE, OR OTHERWISE SUITABLE MATERIAL, HAVING SERIAL NUMBER, THE MAKE, HORSEPOWER, CAPACITY, SPEED, AND OTHER PERTINENT DATA, AND ANY IMPORTANT OPERATING OR MAINTENANCE INSTRUCTIONS, PERMANENTLY AND CLEARLY MARKED ON THE PLATE, SHALL BE MOUNTED ON EACH ITEM OF EQUIPMENT. ALL IMPORTANT PARTS OF EQUIPMENT SHALL BE STAMPED FOR IDENTIFICATION AND LOCATION.
20. ALL NECESSARY ANCHOR BOLTS, NUTS, WASHERS, SETTING TEMPLATES, AND SUCH OTHER PARTS SHALL BE PROVIDED AS REQUIRED FOR THE PROPER INSTALLATION OF THE WORK, AND WHEREVER PRACTICABLE, THEY SHALL BE BUILT IN AS THE WORK PROGRESSES. THE PARTS SHALL BE OF THE MATERIALS SPECIFIED, AND WHERE NOT SPECIFIED OR INDICATED, THEY SHALL BE OF APPROVED TYPES AND MATERIALS FOR EACH APPLICATION. THE SETTING OF ANCHOR BOLTS BY DRILLING AND GROUTING WILL NOT BE PERMITTED.
21. ALL EQUIPMENT SHALL BE INSTALLED IN STRICT CONFORMANCE WITH THE RECOMMENDATIONS OF THE MANUFACTURER, AS APPROVED, TRULY LEVEL AND PLUMB, AND SHALL BE PROVIDED COMPLETE WITH ALL NECESSARY PIPING, FITTINGS, VALVES, CONTROLS, WIRING, AND APPURTENANCES AND ACCESSORIES SO THE EQUIPMENT WILL BE LEFT COMPLETE AND IN SATISFACTORY OPERATING CONDITION. PARTICULAR CARE SHALL BE TAKEN IN THE INSTALLATION OF PUMPS IN ORDER TO PREVENT A STRAIN OF THE PIPING OR PUMP FLANGES AND SHALL INSURE THE CORRECT ALIGNMENT OF SHAFTS, COUPLINGS, AND BEARINGS.
22. SPECIAL CARE SHALL BE TAKEN TO ENSURE PROPER ALIGNMENT OF ALL EQUIPMENT. EQUIPMENT SHALL BE LASER ALIGNED BY A CERTIFIED PROFESSIONAL. THE BED PLATES OR SKIDS SHALL BE FURTHER CHECKED AFTER SECURING TO THE FOUNDATIONS AND AFTER CONFIRMATION OF ALL ALIGNMENTS, THE SOLE PLATES SHALL BE FINALLY GROUTED IN PLACE. THE CONTRACTOR SHALL BE RESPONSIBLE FOR THE EXACT ALIGNMENT OF EQUIPMENT WITH ASSOCIATED PIPING.
23. ALL WEDGES, SHIMS, FILLING PIECES, KEYS, PACKING, GROUT, OR OTHER MATERIALS NECESSARY TO PROPERLY ALIGN, LEVEL, AND SECURE APPARATUS IN PLACE SHALL BE FURNISHED BY THE CONTRACTOR. ALL PARTS INTENDED TO BE PLUMB OR LEVEL MUST BE PROVEN EXACTLY SO. ANY GRINDING NECESSARY TO BRING PARTS TO PROPER BEARING AFTER ERECTION SHALL BE DONE.
24. WHERE CONNECTION OF THE NEW PIPING SYSTEMS TO EXISTING PIPING SYSTEMS IS REQUIRED, PROVIDE MISCELLANEOUS FITTINGS, FILLER FLANGES, COUPLINGS, ETC. AS MAY BE REQUIRED TO COMPLETE THE WORK, WHETHER SHOWN ON THE DRAWINGS OR NOT. FIELD VERITY ALL EXISTING PIPING DIMENSIONS.
25. ALL PIPING SYSTEMS AND EQUIPMENT SHALL BE ADEQUATELY AND SAFELY SUPPORTED. DESIGN, PROVIDE, AND INSTALL ALL SUPPORTS AS REQUIRED BY THE PIPING AND EQUIPMENT PROVIDED. AT A MINIMUM, ALL PIPING SYSTEMS SHALL BE SUPPORTED PER THE REQUIREMENTS OF MANUFACTURER'S STANDARDIZATION SOCIETY (MSS) SP–58 AND MSS SP–69. SUPPORT DESIGN SHALL ACCOMMODATE ALL STATIC AND OPERATIONAL CONDITIONS TO WHICH THE PIPING AND EQUIPMENT MAY BE SUBJECTED. SUPPORTS SHALL BE IN ADDITION TO THOSE SHOWN ON THE DRAWINGS.
26. FINAL LOCATION OF EQUIPMENT AND CONNECTION POINTS SHALL BE DETERMINED IN THE FIELD. ALL DIMENSIONS SHALL BE CONFIRMED AND CORRELATED AT THE JOB SITE.
27. INSTALL EQUIPMENT SO AS TO BE READILY ACCESSIBLE FOR OPERATION, MAINTENANCE, AND REPAIR. MINOR DEVIATIONS FROM THE DRAWINGS MAY BE MADE TO ACCOMPLISH THIS, BUT CHANGES WHICH INVOLVE EXTRA COST SHALL NOT BE MADE WITHOUT PRIOR APPROVAL.
28. OBTAIN AND PAY FOR ALL PERMITS AND INSPECTIONS REQUIRED FOR THE EXECUTION OF THE WORK AND OBTAIN NECESSARY APPROVALS FROM AUTHORITIES THAT HAVE JURISDICTION.
29. INFORMATION SHOWN ON SCHEMATICS AND DETAIL DRAWINGS BUT NOT SHOWN ON FLOOR PLANS, AND VICE VERSA, SHALL MUTUALLY APPLY. IT IS NOT INTENDED TO SHOW EVERY OFFSET, FITTING, OR COMPONENT; HOWEVER, PROVIDE A COMPLETE INSTALLATION AS NECESSARY.
30. PIPE COUPLINGS MAY OR MAY NOT BE SHOWN ON THE DRAWINGS. THE USE OF PIPE COUPLINGS SHALL BE AS REQUIRED UNLESS SPECIFICALLY DICTATED.
31. ALL VENT PIPING SHALL BE EQUIPPED WITH 316 S.S. INSECT SCREENS WITH FLANGES AT THE STRUCTURE PENETRATIONS.

PIPE SCHEDULE

SYMBOL	DESCRIPTION	LOCATION	MATERIAL	JOINT SYSTEM
S	SEWER	EXTERIOR	CLASS 51 DI	PUSH–ON/MJ
FM	FORCE MAIN	INTERIOR	CLASS 53 DI	FLANGED
		EXTERIOR	CLASS 51 DI	PUSH–ON/MJ
VENT	VENT	EXTERIOR	CLASS 51 DI	PUSH–ON/MJ

INTERIOR PIPE PAINTING SCHEDULE

SYMBOL	DESCRIPTION	PAINTING COLOR	PAINTING TEXT
DR	DRAIN	BLACK	DRAIN
FM	FORCEMAIN	GRAY	RAW WW
VENT	VENT	BROWN	VENT

INTERIOR PAINTING NOTES

1. ALL LETTERING SHALL BE CLEARLY LEGIBLE IN WHITE PAINT, A MINIMUM OF 2 INCHES IN HEIGHT UNLESS OTHERWISE NOTED OR SPECIFIED.
2. CONTRACTOR SHALL SUBMIT PAINTING SCHEME AND COLORS TO ENGINEER PRIOR TO ANY PAINTING OPERATIONS.
3. PAINTS CONTAINING LEAD OR MERCURY SHALL NOT BE PERMITTED.
4. ALL PROCESS PIPING SHALL BE PAINTED.

MISCELLANEOUS PROCESS ABBREVIATIONS

ø	DIAMETER
AIR	PROCESS AIR
ABR	AERATION BASIN RECYCLE
ALK	ALKALINITY
ALUM	ALUMINUM
WAG	ADJUSTABLE WEIR GATE (SELF–CONTAINED)
B	BLOWER
BF	BLIND FLANGE
BLDG	BUILDING
CU	COPPER
CB	CATCH BASIN
CI	CAST IRON
CO	CLEANOUT
CONC	CONCRETE
CONT	CONTINUED
CPL	COUPLING
DET	DETAIL
DIA	DIAMETER
DMH	DRAINAGE MANHOLE
DI	DUCTILE IRON
DN	DOWN
DR	DRAIN
ECC	ECCENTRIC
EFF	EFFLUENT (FINAL)
EL	ELEVATION
ELL	ELBOW
EQUIP	EQUIPMENT
EXP	EXPANSION
F	FIRE PROTECTION
FC	FLUSHING CONNECTION
FD	FLOOR DRAIN
FE	FINAL EFFLUENT
FIL	FILTRATE
FIT	FLOW INDICATING TRANSMITTER
FLG	FLANGE
FLR	FLOOR
FM	FORCEMAIN
FPHB	FROST PROOF HOSE BIBB
FRP	FIBERGLASS REINFORCE POLYESTER
FW	FIXED WEIR
GA	GAUGE
GALV	GALVANIZED
GR	GREASE
H	HEAT
HB	HOSE BIBB
HP	HIGH POINT
HYD	HYDRANT
HYP	HYPOCHLORITE
ID	INSIDE DIAMETER
IMLR	INTERNAL MIXED LIQUOR RECYCLE
INF	INFLUENT
INV	INVERT
JT	JOINT
KV	KNIFE GATE VALVE
LE	LEVEL ELEMENT
LIT	LEVEL INDICATING TRANSMITTER
LR	LONG RADIUS
MAX	MAXIMUM
MBR	MEMBRANE BIOLOGICAL REACTOR
MECH	MECHANICAL
METH	METHANOL
MFG	MANUFACTURER
MH	MANHOLE
MIN	MINIMUM
MJ	MECHANICAL JOINT
MTD	MOUNTED
MFT	MEMBRANE TANK FEED
MTR	MEMBRANE TANK RECIRCULATION
NaOH	SODIUM HYDROXIDE
NG	NATURAL GAS
NO	NUMBER
NPT	NATIONAL PIPE THREAD
NRE	NITROGEN REMOVAL EFFLUENT
OC	ON CENTER
OD	OUTSIDE DIAMETER
OH	OVERHEAD
PE	POLYETHYLENE
POV	PNEUMATICALLY OPERATED VALVE
PRI	PRIMARY
PRV	PRESSURE RELIEF VALVE OR PRESSURE REGULATING VALVE
PRW	PROCESS WATER
PSIG	POUNDS PER SQUARE INCH GAUGE
PTE	PRELIMINARY TREATMENT EFFLUENT
PVC	POLYVINYL CHLORIDE
PW	PLANT OR PROCESS WATER
RED	REDUCER
REQ'D	REQUIRED
S	SEWER
SAM	SAMPLER LINE CONDUIT
SBR	SEQUENCING BATCH REACTOR
SCH	SCHEDULE
SCSTG	ADJUSTABLE STOP GATE (SELF CONTAINED)
SECT	SECTION
SL	SLUDGE
SMH	SEWER MANHOLE
SP	SUMP PUMP
SPD	SUMP PUMP DISCHARGE
SS	STAINLESS STEEL
STD	STANDARD
STE	SECONDARY TREATMENT EFFLUENT
STG	STOP GATE
STL	STEEL
SW	SEAL WATER
THK	THICKNESS
TWAS	THICKENED WASTE SLUDGE
TYP	TYPICAL
VERT	VERTICAL
W	POTABLE WATER
WS	WASTE SLUDGE
WAS	WASTE SLUDGE
YH	YARD HYDRANT

PROCESS EQUIPMENT ABBREVIATIONS

P–#	PUMP NO. X

CONSTRUCTION DOCUMENTS
12/11/15

Weston&Sampson®
273 Dividend Road, Rocky Hill, CT 06067
(860) 513-1473 (800) SAMPSON
www.westonandsampson.com

No.	Date	Dr.By	Ck.By	App.By	Description
1	03/07/16	IMJ	CBW	CBW	ADDENDUM #1

APPROVED — DATE 03–07–16
REGISTERED PROFESSIONAL ENGINEER

TOWN OF GREENWICH – DEPARTMENT OF PUBLIC WORKS
RITCH AVENUE WEST, GREENWICH, CONNECTICUT
BYRAM PARK POOL REPLACEMENT
PROCESS/MECHANICAL
SCHEDULES AND ABBREVIATIONS

CADD NO. GREENWICH | SCALE: NONE | CONTRACT: – | JOB NO. 2130336 | DR.BY L.E.C. | DSN.BY L.E.C. | CHK.BY J.S.P. | APP.BY C.B.W.

M10.1

FILE NO.

SHEET — OF —

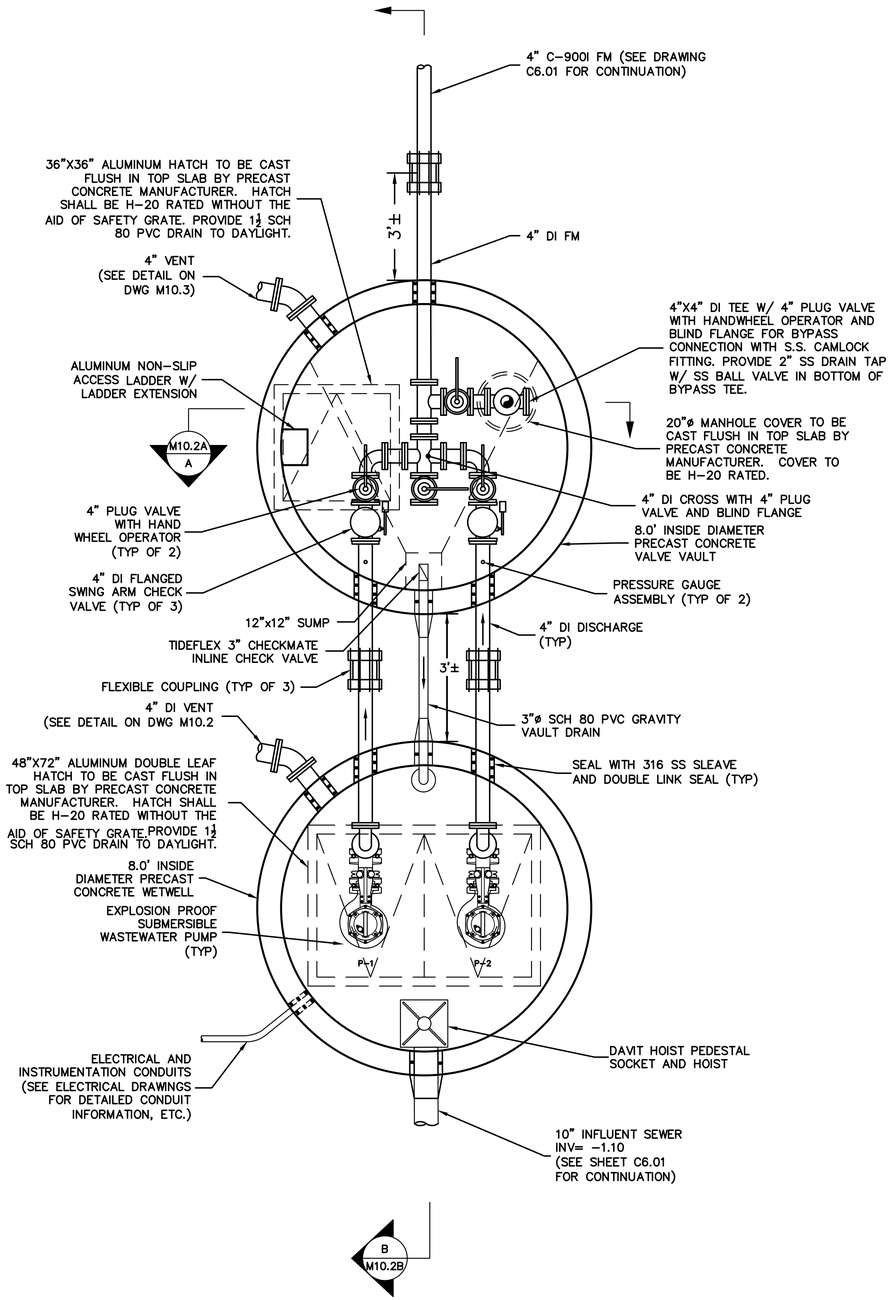

PROPOSED BYRAM PARK PUMPING STATION

SCALE: 1/2"=1'-0"

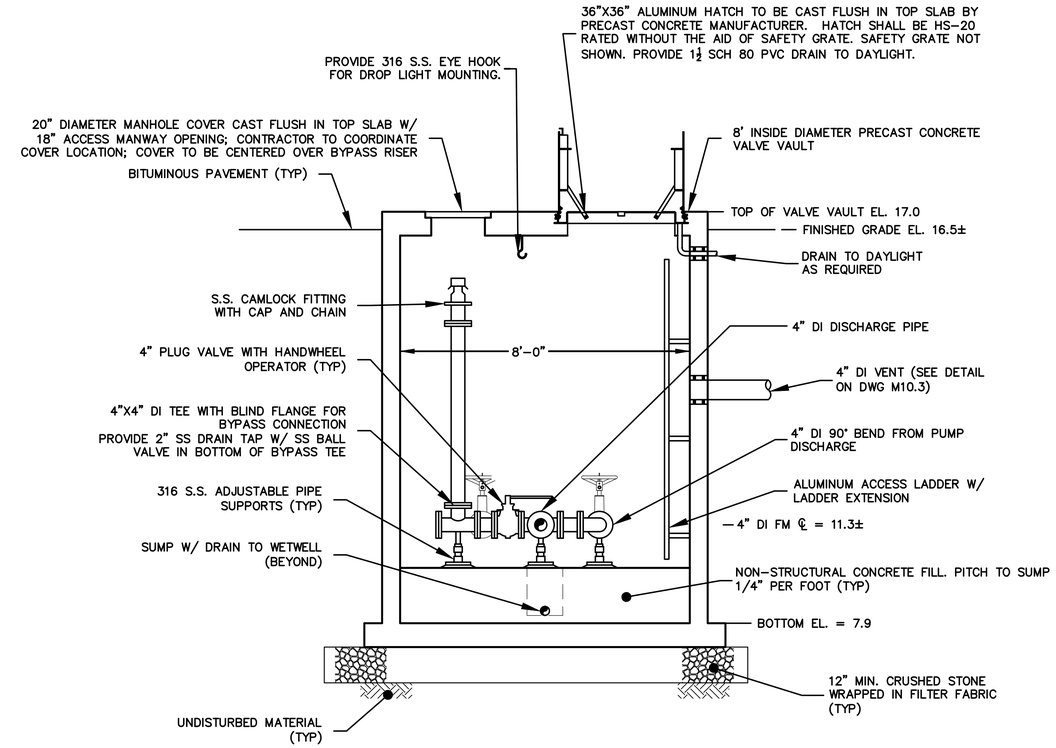

SECTION A M10.2A

SCALE: NTS

NOTES:
1. WETWELL AND VALVE VAULT SHALL INCLUDE WATERPROOF COATING ON THE EXTERIOR IN ACCORDANCE WITH THE SPECIFICATIONS.
2. THE INTERIOR WALLS OF THE WETWELL SHALL BE COATED WITH EXPOXY IN ACCORDANCE WITH THE SPECIFICATIONS.
3. ALL HATCHES SHALL BE EQUIPPED WITH NON-REMOVABLE SAFETY GRATES. SEE SPECIFICATIONS.

CONSTRUCTION DOCUMENTS
12/11/15

Weston&Sampson®
273 Dividend Road, Rocky Hill, CT 06067
(860) 513-1473 (800) SAMPSON
www.westonandsampson.com

No.	Date	Dr.By	Ck.By	App.By	Description
1	03/07/16	IMJ	CBW	CBW	ADDENDUM #1

APPROVED 03-07-16 DATE

REGISTERED PROFESSIONAL ENGINEER

STATE OF CONNECTICUT CHRISTOPHER B. WESTER No. 27078 LICENSED PROFESSIONAL ENGINEER

TOWN OF GREENWICH – DEPARTMENT OF PUBLIC WORKS
RITCH AVENUE WEST, GREENWICH, CONNECTICUT
BYRAM PARK POOL REPLACEMENT

PUMPING STATION PLAN AND SECTION

CADD NO.	SCALE:	CONTRACT:	JOB NO.	DR.BY	DSN.BY	CHK.BY	APP.BY
GREENWICH	AS NOTED	–	2130336	L.E.C.	L.E.C.	J.S.P.	C.B.W.

M10.2A

FILE NO.

SHEET – OF –

NOTES:

1. ALL LINK SEAL HARDWARE SHALL BE TYPE 316 S.S.
2. ALL MISCELLANEOUS METALS AND HARDWARE SHALL BE TYPE 316 S.S.
3. ALL PIPING SHOWN ON THIS DRAWING SHALL HAVE THE FORCEMAIN CLASSIFICATION FROM DRAWING M10.1 UNLESS SPECIFICALLY STATED.
4. BACKUP FLOATS SHOWN OUT OF PHASE FOR CLARITY.
5. WETWELL AND VALVE VAULT SHALL INCLUDE WATERPROOF COATING ON THE EXTERIOR IN ACCORDANCE WITH THE SPECIFICATIONS.
6. THE INTERIOR WALLS OF THE WETWELL SHALL BE COATED WITH EXPOXY IN ACCORDANCE WITH THE SPECIFICATIONS.
7. ALL HATCHES SHALL BE EQUIPPED WITH NON-REMOVABLE SAFETY GRATES. SEE SPECIFICATIONS.
8. BACKUP FLOATS SHALL BE FLYGT ENM-10 LEVEL REGULATOR.

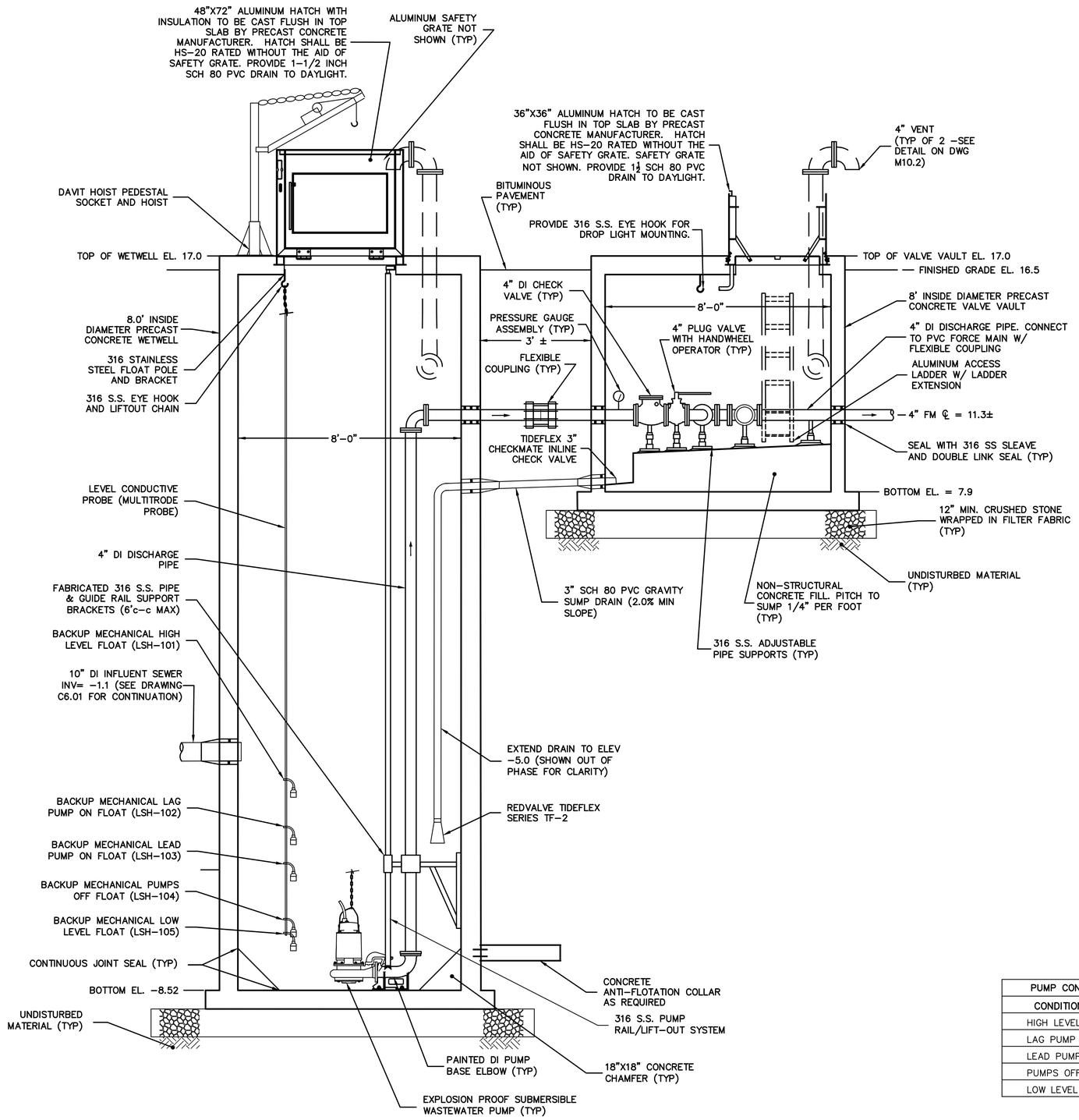

SECTION B M10.2A
SCALE: 1/2"= 1'-0"

PUMP CONTROL LEVEL TABLE	
CONDITION	ELEVATION
HIGH LEVEL ALARM	-1.60
LAG PUMP ON	-4.10
LEAD PUMP ON	-4.60
PUMPS OFF	-6.60
LOW LEVEL ALARM	-7.10

CONSTRUCTION DOCUMENTS
12/11/15

Weston&Sampson®
273 Dividend Road, Rocky Hill, CT 06067
(860) 513-1473 (800) SAMPSON
www.westonandsampson.com

No.	Date	Dr.By	Ck.By	App.By	Description
1	03/07/16	IMJ	CBW	CBW	ADDENDUM #1

APPROVED

REGISTERED PROFESSIONAL ENGINEER 03-07-16 DATE

TOWN OF GREENWICH - DEPARTMENT OF PUBLIC WORKS
RITCH AVENUE WEST, GREENWICH, CONNECTICUT
BYRAM PARK POOL REPLACEMENT

PUMPING STATION PLAN AND PROFILE

CADD NO. GREENWICH | SCALE: 1/2"=1'-0" | CONTRACT: - | JOB NO. 2130336 | DR.BY L.E.C. | DSN.BY L.E.C. | CHK.BY J.S.P. | APP.BY C.B.W.

M10.2B

FILE NO.

SHEET - OF -

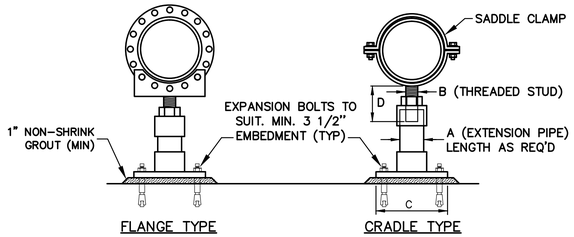

APPROXIMATE DIMENSIONS				
PIPE SIZE	A	B	C	D (MIN)
6"	2"	1"	4"x6"	6"
8"	2"	1"	4"x6"	6"
10"	2"	1"	4"x6"	6"
12"	2"	1"	4"x6"	6"

NOTES:
1. ALL COMPONENTS SHALL BE 316 STAINLESS STEEL.

ADJUSTABLE PIPE SUPPORT DETAIL
N.T.S.

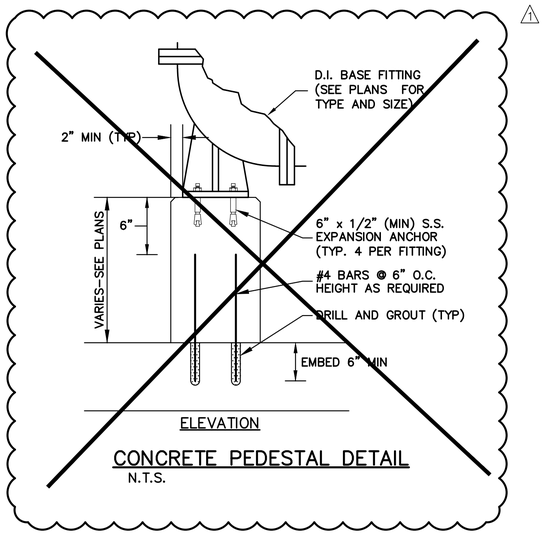

CONCRETE PEDESTAL DETAIL
N.T.S.

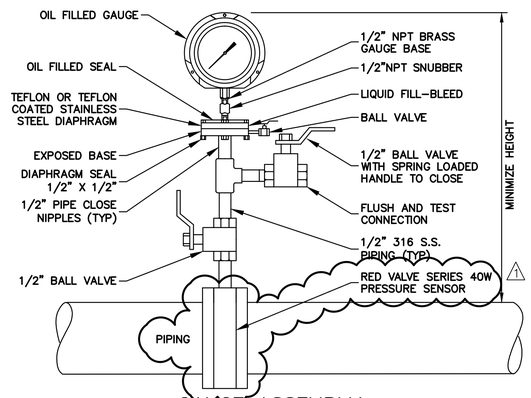

GAUGE ASSEMBLY
N.T.S.

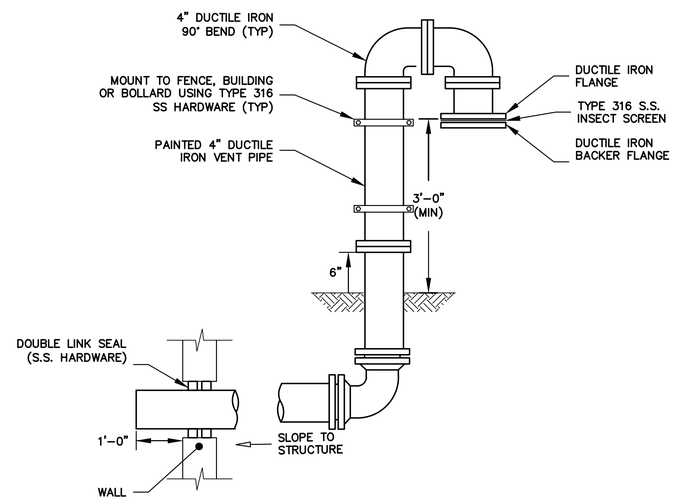

CONCRETE STRUCTURE DUCTILE IRON VENT DETAIL
N.T.S.

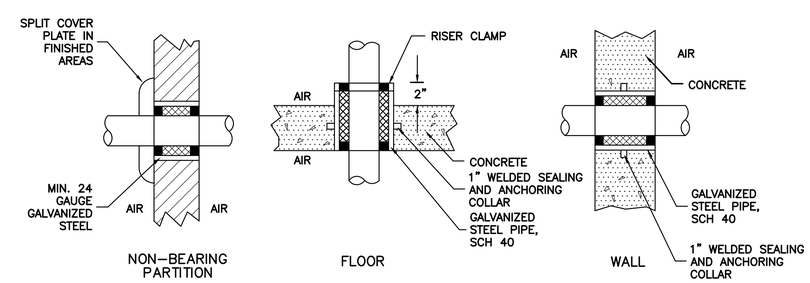

NOTES:
1. PROVIDE MINIMUM 1/4" ANNULAR SPACE BETWEEN SLEEVE AND PIPE, PACK WITH OAKUM AND SEAL ENDS WITH SEALANT PER SPECIFICATIONS.

PIPING SLEEVE DETAILS
N.T.S.

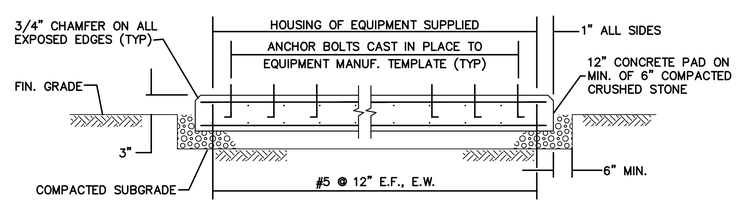

NOTE: COORDINATE ALL OPENINGS IN PAD WITH EQUIPMENT MANUFACTURER

EQUIPMENT PAD DETAIL
N.T.S.

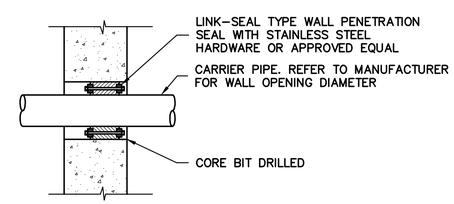

TYPICAL PIPE WALL PENETRATION DETAIL
N.T.S.

CONSTRUCTION DOCUMENTS
12/11/15

Weston&Sampson®
273 Dividend Road, Rocky Hill, CT 06067
(860) 513-1473 (800) SAMPSON
www.westonandsampson.com

No.	Date	Dr.By	Ck.By	App.By	Description
1	03/07/16	IMJ	CBW	CBW	ADDENDUM #1

APPROVED — REGISTERED PROFESSIONAL ENGINEER — DATE 03-07-16

TOWN OF GREENWICH – DEPARTMENT OF PUBLIC WORKS
RITCH AVENUE WEST, GREENWICH, CONNECTICUT
BYRAM PARK POOL REPLACEMENT
MECHANICAL DETAILS

CADD NO.	SCALE:	CONTRACT:	JOB NO.	DR.BY	DSN.BY	CHK.BY	APP.BY
GREENWICH	NONE	–	2130336	L.E.C.	L.E.C.	J.S.P.	C.B.W.

FILE NO. M10.3

SHEET — OF —

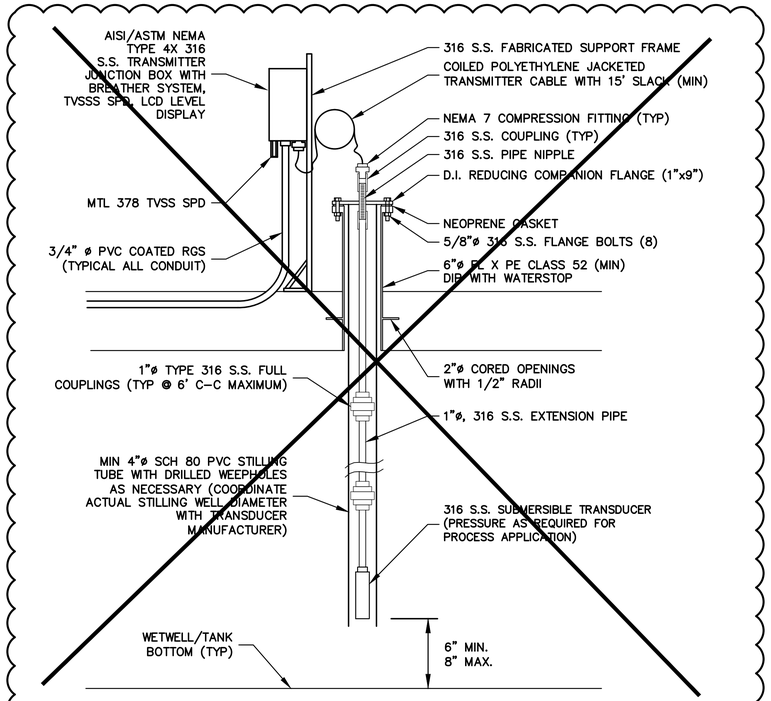

CLOSED-TANK SUBMERSIBLE TRANSMITTER TYPICAL MOUNTING DETAIL

N.T.S.

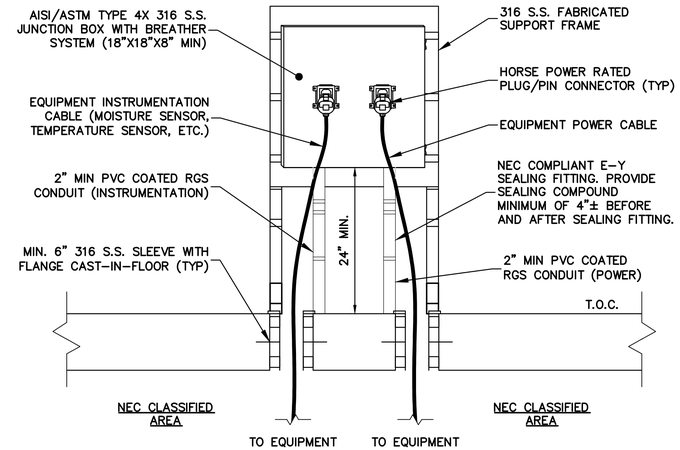

TYPICAL FRONT ANGLE

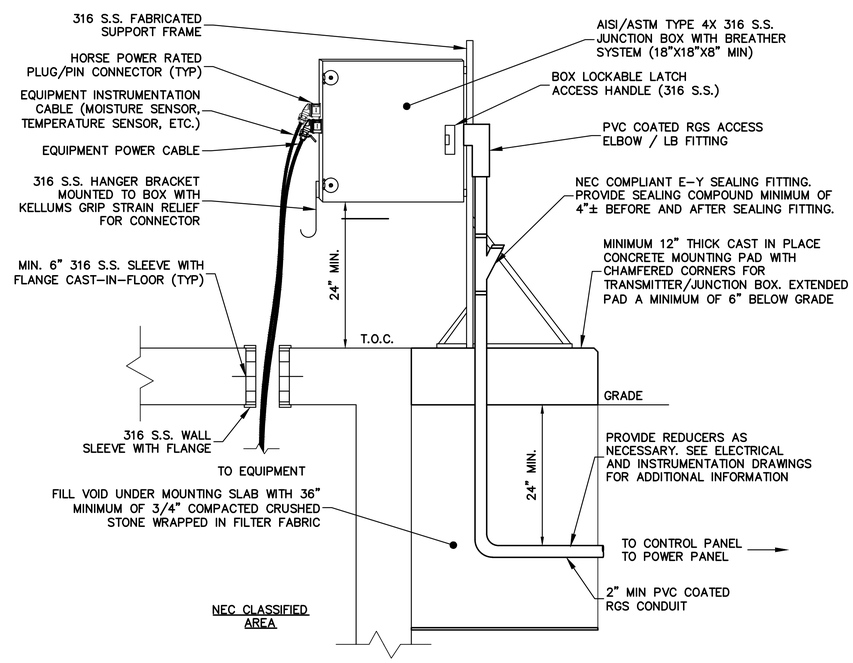

TYPICAL SIDE ANGLE

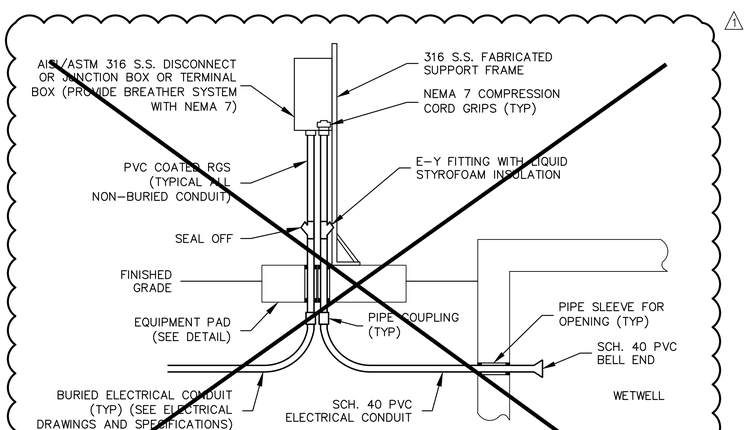

TYPICAL DISCONNECT OR JUNCTION BOX DETAIL

N.T.S.

NOTES:

1. THE CONTRACTOR SHALL PROVIDE A MINIMUM OF TWO PLUG/PIN CONNECTORS PER MOTOR ASSEMBLY. ONE DEDICATED PLUG/PIN CONNECTOR SHALL BE PROVIDED FOR THE EQUIPMENT POWER AND ONE FOR THE INSTRUMENTATION CABLES. POWER PLUG/PINS SHALL BE NEMA 4X AND HORSEPOWER RATED. ADDITIONAL HORSEPOWER RATED PLUG/PINS SHALL BE PROVIDED AT NO ADDITIONAL COST BASED ON THE ACTUAL MOTOR LOADS AND HORSEPOWER RATING REQUIREMENTS. THE CONTRACTOR SHALL COORDINATE THESE REQUIREMENTS WITH THE EQUIPMENT MANUFACTURER. PLUG/PIN CONNECTORS SHALL BE AS MANUFACTURED BY CROUSE-HINDS OR MELTRIC CORPORATION.
2. PLUG/PIN CONNECTORS ARE SHOWN MOUNTED TO THE FRONT OF THE JUNCTION BOX/TRANSMITTER ENCLOSURE FOR CLARITY OF THE DETAIL. THE PLUG/PIN CONNECTORS SHALL BE INSTALLED ON THE BOTTOM OF THE JUNCTION BOX/TRANSMITTER ENCLOSURE SUCH THAT THE ENCLOSURE PROVIDES A DRIP EDGE/ MEANS OF WEATHER PROTECTION FOR THE PLUG/PIN CONNECTORS.
3. ALL COMPONENTS OF THE PLUG/PIN CONNECTORS SHALL BE NON-FUSED.
4. ALL EQUIPMENT UTILIZING PLUG/PIN CONNECTIONS SHALL BE PROVIDED WITH LOCKOUT/TAGOUT PROVISIONS ON THE SYSTEM CONTROL PANEL/STARTER REGARDLESS OF WHETHER OR NOT THE LOCKOUT/TAGOUT PROVISIONS ARE SPECIFIED.
5. THE CONTRACTOR SHALL COORDINATE THE EQUIPMENT CABLE AND CABLE PIN QUANTITY REQUIREMENTS WITH THE APPROVED EQUIPMENT. THE CONTRACTOR SHALL PROVIDE PLUGS/PINS WITH ADDITIONAL PINS AS NECESSARY AND AT NO ADDITIONAL COST TO THE OWNER BASED ON THE QUANTITY OF PINS REQUIRED BY THE EQUIPMENT MANUFACTURER.
6. FOR SUBMERSIBLE PUMPING APPLICATIONS THE CONTRACTOR SHALL PROVIDE ONE JUNCTION BOX/TRANSMITTER WITH ALL OF THE PLUG/PIN RECEPTACLES PROVIDED ON THE BOX. THE CONTRACTOR SHALL UPSIZE THE MINIMUM JUNCTION BOX/TRANSMITTER SIZE AS REQUIRED AND AT NO ADDITIONAL COST.

PLUG/PIN STYLE CONNECTOR TRANSMITTER AND JUNCTION BOX MOUNTING DETAIL

N.T.S.

CONSTRUCTION DOCUMENTS
12/11/15

Weston&Sampson®
273 Dividend Road, Rocky Hill, CT 06067
(860) 513-1473 (800) SAMPSON
www.westonandsampson.com

No.	Date	Dr.By	Ck.By	App.By	Description
1	03/07/16	IMJ	CBW	CBW	ADDENDUM #1

APPROVED — REGISTERED PROFESSIONAL ENGINEER — DATE 03-07-16

TOWN OF GREENWICH – DEPARTMENT OF PUBLIC WORKS
RITCH AVENUE WEST, GREENWICH, CONNECTICUT
BYRAM PARK POOL REPLACEMENT

MECHANICAL DETAILS

CADD NO.	SCALE:	CONTRACT:	JOB NO.	DR.BY	DSN.BY	CHK.BY	APP.BY
GREENWICH	NONE	–	2130336	L.E.C.	L.E.C.	J.S.P.	C.B.W.

M10.4

FILE NO.

SHEET – OF –

MAKE-UP AIR UNIT SCHEDULE

TAG	LOCATION	SERVICE	CFM		STATIC PRESS		FILTER DATA	MOTOR RPM	VFD	ELECTRICAL DATA						MODEL NUMBER	REMARKS
			TOTAL	MIN O.A.	ESP (IN)	TSP (IN)				MCA	MOP	HP	V	PH	HZ		
MAU-1	ATTIC	KITCHEN HOOD	2,160	2,160	.75	1	MERV 12	1725	NO	4.1	15	1.5	460	3	60	MSX-110-H12	1 & 2

NOTES:
1. SELECTIONS BASED ON GREENHECK.
2. PROVIDE WITH INLET DAMPER, PERMATECTOR COATING (GREY), HINGED ACCESS, CONTROL CENTER, DIRTY FILTER SWITCH, SMOKE DETECTOR, 2 NC/NO DRY CONTACTS AND SERVICE RECEPTACLE. 1

FAN

TAG	TYPE	SERVICE	CFM	S.P. (IN WC)	WHEEL			FAN RPM	MOTOR RPM	ECM	ELECTRICAL DATA					MODEL NUMBER	REMARKS
					DIA (IN)	TYPE	DRIVE				HP	FLA	V	PH	HZ		
EF-1	INLINE	RESTROOMS	950	.75	-	BI	DIRECT	2,041	2,200	YES	.75	11.3	115	1	60	SQ-99-VG	1 & 2
EF-2	INLINE	RESTROOMS	825	.75	-	BI	DIRECT	2,041	2,200	YES	.75	11.3	115	1	60	SQ-99-VG	1 & 2
EF-3	PROP	FILTER ROOM	800	.25	-	BI	DIRECT	1,550	1,550	NO	1/8	-	115	1	60	SE1-12-432-D	1 & 4
KEF-1	CENT	KITCHEN HOOD	2,700	1	-	BI	BELT	995	1,725	NO	1	2.1	460	3	60	USGF-180-10	1 & 3

NOTES:
1. SELECTIONS BASED ON GREENHECK
2. PROVIDE WITH PERMATECTOR COATING (GREY), GRAVITY BACKDRAFT DAMPER AND ECM MOTOR (W/0-10 VDC INPUT).
3. PROVIDE WITH PREMIUM EFFICIENT MOTOR, UL 762 LISTED FAN, HINGED BASE, NON-STICK WHEEL, S. S. FASTENERS & S. S. SHAFT AND EXTENDED LUBE LINES
4. PROVIDE WITH FLUSH EXTERIOR WALL HOUSING (W/ OSHA GAURD, PERMATECTOR COATING), WEATHERHOOD (45 DEG, W/BIRD SCREEN),

SPLIT SYSTEM HEAT PUMP SCHEDULE

INDOOR SECTION

TAG	LOCATION AND SERVICE	MODEL NUMBER	CFM	FAN MOTOR (HP)	COOLING (MBH)	HEATING (MBH)	ELECTRICAL		ROOM CONDITIONS	
							FLA	MCA	DB	RH
AC-1	LIFEGUARD	MSZ-FE18NA	470	-	18	21.6	.79	1	75	45%
AC-2	NURSE	MSZ-FE09NA	225	-	9	10.9	.76	1	75	45%

OUTDOOR SECTION

TAG	LOCATION AND SERVICE	MODEL NUMBER	AMB. (°F) COOLING/HEATING	ELECTRICAL						REMARKS
				V	PH	HZ	FLA	MCA	MOP	
ACCU-1	ON GRADE/(AC-1)	MUZ-FE18NA	95 / -13	208	1	60	.93	17.1	20	1 & 2
ACCU-2	ON GRADE/(AC-2)	MUZ-FE09NA	95 / -13	208	1	60	.56	12	15	1 & 2

NOTES:
1. SELECTIONS BASED ON MITSUBUSHI
2. PROVIDE WITH AIR OUTLET GUIDE, CONDENSATE PUMP AND WIRED WALL MOUNTED CONTROLLER.

AIR CONDITIONING UNITS

SYMBOL	SERVES	LOCATION	MAX CFM	ESP (IN WC)	FAN TYPE	NO. OF FANS	UNIT STYLE	HP	DX COIL DATA						ELECTRICAL			REFRIGERANT TYPE	MODEL	REMARKS
									TOTAL CLG (BTUH)	SENS CLG (BTUH)	EAT DB (°F)	EAT WB (°F)	LAT DB (°F)	LAT WB (°F)	V	PH	HZ			
AC-3	KITCHEN	ATTIC	450	.75	CENT	1	HORIZ.	1/3	19.2	12.6	80	67	53.7	52.9	460	3	60	R-410A	LFC-15-FC-4	1, 2 & 3

NOTES:
1. BASED ON GREENHECK
2. PROVIDE WITH PERMATECTOR COATING (GREY), CONTROL CENTER AND INLET DAMPER.
3. PROVIDE MODULES (IN DIRECTION OF AIRFLOW): INLET DAMPER, PREFILTER, DX COOLING COIL AND SUPPLY FAN (TOP HORIZONTAL DISCHARGE POSITION)..

AIR COOLED CONDENSING UNIT

SYMBOL	SERVES	LOCATION	O.A. AMB	TONS	COMPRESSOR				CONDENSER FAN			REFRIG. TYPE	ELECTRICAL			REMARKS
					QTY	RLA	MCA	MOP	QTY	HP	FLA		V	PH	HTZ	
ACCU-3	AC-3	GRADE	95°	2	1	13	18	20	1	1/8	0.74	R-410A	208	1	60	1 & 2

NOTES:
1. BASED ON TRANE
2. PROVIDE 2 STAGE SCROLL COMPRESSOR

GRILLE, REGISTERS & DIFFUSERS

SYMBOL	SIZE	MODEL	FUNCTION	MATERIAL	TYPE	FINISH	DAMPER	CFM RANGE	MAX NC	REMARKS
SD-1	9"x9"	AMX	SUPPLY	ALUMINUM	CEILING	PER ARCH	NONE	0 - 280	35	
ER-1	8"x8"	630	EXHAUST	ALUMINUM	CEIL/WALL	PER ARCH	NONE	0 - 200	25	
ER-2	10"x8"	630	EXHAUST	ALUMINUM	CEIL/WALL	PER ARCH	NONE	201 - 350	25	

COPYRIGHT 2015 WESTON & SAMPSON

Weston&Sampson®
273 Dividend Road, Rocky Hill CT 06067
(860) 513-1473 (800) SAMPSON
www.westonandsampson.com

No.	Date	Dr. By	Ck. By	App. By	Description
1	03/03/16	KJP	SEH	SEH	ADDENDUM #1

APPROVED

REGISTERED PROFESSIONAL ENGINEER

5/4/2016
DATE

TOWN OF GREENWICH – DEPARTMENT OF PUBLIC WORKS
RITCH AVENUE WEST, GREENWICH, CONNECTICUT
BYRAM PARK POOL REPLACEMENT

HVAC SCHEDULES

CADD NO.	SCALE:	CONTRACT:	JOB NO.	DR. BY	DSN. BY	CHK. BY	APP. BY
–	–	–	2130336	KJP	KJP	SEH	SEH

H2.01

FILE NO. –

SHEET – OF

Z:\CT-Rockyhill-Projects\Greenwich CT\Greenwich Pools and Recreation\Byram Park\CAD\MEP\HVAC\H2.01 HVAC Schedule.dwg

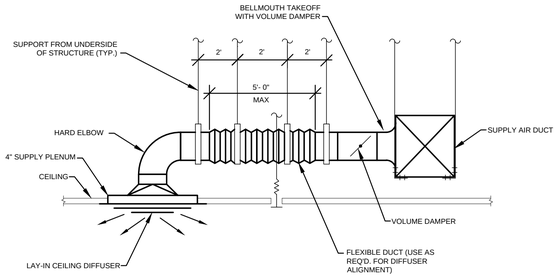

NOTES:

1. FLEXIBLE DUCT: MAXIMUM SAG 1/2" PER FOOT.

CEILING DIFFUSER BRANCH TAKE-OFF DETAIL

NTS 1

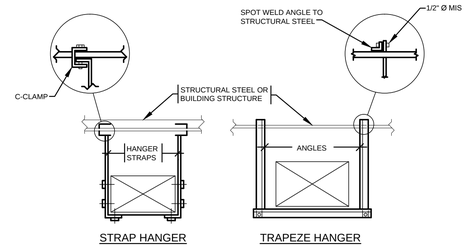

NOTES:

1. REFER TO OTHER DETAILS ON THIS DRAWING FOR HIGH VELOCITY DUCTWORK DETAILS AS REQUIRED.
2. FOR STRAP AND TRAPEZE HANGER SIZE, REFER TO SMACNA DUCT STANDARDS
3. NO POP RIVETS ALLOWED, USE SELF-TAPPING SHEET METAL SCREWS ONLY.

DUCT HANGER DETAIL (LOW VELOCITY)

NTS 2

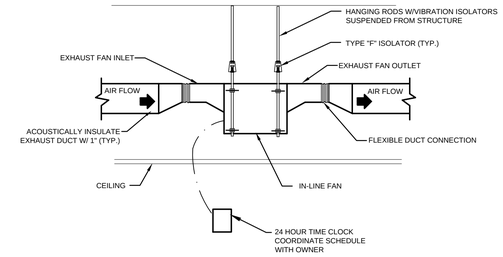

INLINE CABINET FAN DETAIL

NTS 3

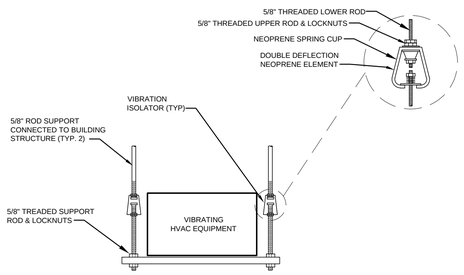

VIBRATION ISOLATOR DETAIL

NTS 4

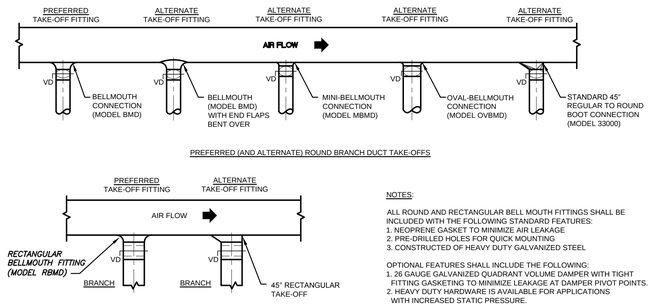

NOTES:

ALL ROUND AND RECTANGULAR BELL MOUTH FITTINGS SHALL BE INCLUDED WITH THE FOLLOWING STANDARD FEATURES:
1. NEOPRENE GASKET TO MINIMIZE AIR LEAKAGE
2. PRE-DRILLED HOLES FOR QUICK MOUNTING
3. CONSTRUCTED OF HEAVY DUTY GALVANIZED STEEL

OPTIONAL FEATURES SHALL INCLUDE THE FOLLOWING:
1. 26 GAUGE GALVANIZED QUADRANT VOLUME DAMPER WITH TIGHT FITTING GASKETING TO MINIMIZE LEAKAGE AT DAMPER PIVOT POINTS.
2. HEAVY DUTY HARDWARE IS AVAILABLE FOR APPLICATIONS WITH INCREASED STATIC PRESSURE.

BELLMOUTH CONNECTION DETAIL

NTS 5

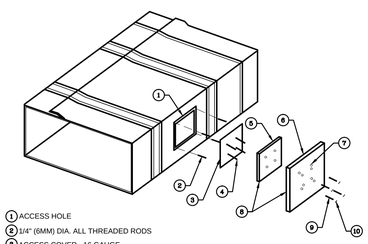

1. ACCESS HOLE
2. 1/4" (6MM) DIA. ALL THREADED RODS
3. ACCESS COVER - 16 GAUGE
4. INSULATION PINS - WELDED
5. FIRST LAYER 3M FIRE BARRIER DUCT WRAP 15A CUT SAME SIZE AS COVER
6. SECOND LAYER 3M FIRE BARRIER DUCT WRAP 15A WITH 1 IN. (25MM) OVERLAP ON ALL SIDES
7. SPEED CLIPS
8. ALUMINUM TAPE COVERING ALL EXPOSED EDGES
9. SPOOL PIECES FOR THREADED RODS
10. 1/4 IN. (6MM) DIAMETER WING NUTS

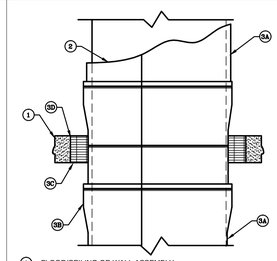

1. FLOOR/CEILING OR WALL ASSEMBLY
2. DUCT
3A. ONE LAYER 3M FIRE BARRIER DUCT WRAP 15A
3B. BANDING OR PINNINGE
3C. PACKING MATERIAL
3D. 3M FIRE BARRIER 1000 N/S, 1003 S/L OR 2000+ SILICONE SEALANT FOR WALL ASSEMBLY APPLY SEALANT TO BOTH SIDES OF WALL

FIRE RATED KITCHEN GREASE DUCT ACCESS DOOR

NTS 6

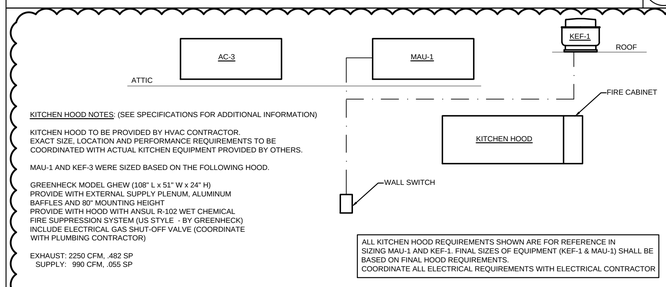

KITCHEN HOOD NOTES: (SEE SPECIFICATIONS FOR ADDITIONAL INFORMATION)

KITCHEN HOOD TO BE PROVIDED BY HVAC CONTRACTOR. EXACT SIZE, LOCATION AND PERFORMANCE REQUIREMENTS TO BE COORDINATED WITH ACTUAL KITCHEN EQUIPMENT PROVIDED BY OTHERS.

MAU-1 AND KEF-3 WERE SIZED BASED ON THE FOLLOWING HOOD.

GREENHECK MODEL GHEW (108" L x 51" W x 24" H)
PROVIDE WITH EXTERNAL SUPPLY PLENUM, ALUMINUM BAFFLES AND 80" MOUNTING HEIGHT
PROVIDE WITH HOOD WITH ANSUL R-102 WET CHEMICAL FIRE SUPPRESSION SYSTEM (US STYLE - BY GREENHECK)
INCLUDE ELECTRICAL GAS SHUT-OFF VALVE (COORDINATE WITH PLUMBING CONTRACTOR)

EXHAUST: 2250 CFM, .482 SP
SUPPLY: 990 CFM, .055 SP

ALL KITCHEN HOOD REQUIREMENTS SHOWN ARE FOR REFERENCE IN SIZING MAU-1 AND KEF-1. FINAL SIZES OF EQUIPMENT (KEF-1 & MAU-1) SHALL BE BASED ON FINAL HOOD REQUIREMENTS. COORDINATE ALL ELECTRICAL REQUIREMENTS WITH ELECTRICAL CONTRACTOR

CONTROL NOTES:

1. KEF-1 AND MAU-1 TO BE TURNED OFF & ON BY A WALL MOUNTYED SWITCH (FURNISHED & INSTALLED BY ELECTRICAL CONTRACTOR).
2. AC-1 SHALL BE CONTROLLED BY A WALL MOUNTED PROGRAMMABLE THERMOSTAT. FAN TO RUN CONTINUOUSLY WHENEVER KEF-1 IS ON.
3. REFER TO ELECTRICAL DRAWINGS FOR ADDITIONAL INFORMATION.

KITCHEN EXHAUST/MAKE-UP CONTROL

NTS 7

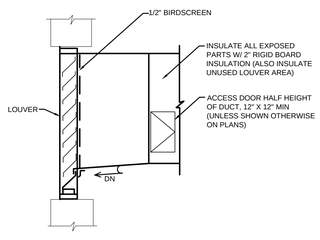

LOUVER DETAIL

NTS 8

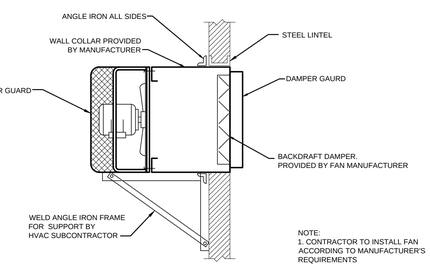

NOTE:
1. CONTRACTOR TO INSTALL FAN ACCORDING TO MANUFACTURER'S REQUIREMENTS

PROPELLER FAN DETAIL

NTS 9

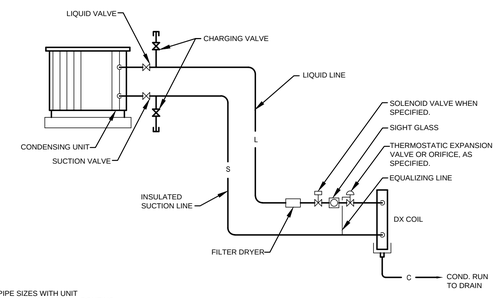

NOTES:

1. CONFIRM ALL PIPE SIZES WITH UNIT MANUFACTURER BASED ON ACTUAL ROUTING OF PIPING.
2. CONTROL EQUIPMENT, APPURTENANCES AND TRAPS AS RECOMMEND BY UNIT MANUFACTURER.

DX COIL/CONDENSING UNIT PIPING DETAIL

NTS 10

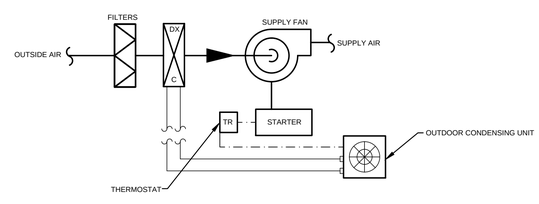

NOTES:

1. AC-1 & AC-2 TO BE CONTROL BY MANUFACTURERS PACKAGED CONTROL SYSTEM.
2. AC-3 TO BE CONTROLLED BY A WALL MOUNTED THERMOSTAT.

SPLIT SYSTEM AIR CONDITIONER CONTROL SEQUENCE

NTS 11

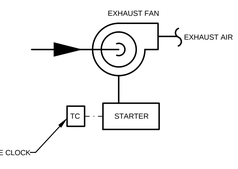

NOTES:

1. EF-1 & EF-2 SHALL BE CONTROLLED BY A 24 HR/ 7 DAY (W/2 HR OVERRIDE) PROGRAMMABLE TIME CLOCK .

EF-1 & EF-2 CONTROL SEQUENCE

NTS 12

COPYRIGHT 2015 WESTON & SAMPSON

Weston&Sampson®
273 Dividend Road, Rocky Hill CT 06067
(860) 513-1473 (800) SAMPSON
www.westonandsampson.com

No.	Date	Dr By	Ck By	App By	Description
1	03/03/16	KJP	SEH	SEH	ADDENDUM #1

APPROVED

REGISTERED PROFESSIONAL ENGINEER

5/4/2016
DATE

TOWN OF GREENWICH – DEPARTMENT OF PUBLIC WORKS
RITCH AVENUE WEST, GREENWICH, CONNECTICUT
BYRAM PARK POOL REPLACEMENT

HVAC DETAILS

DSN BY:	DR BY:	CHK BY:	APP BY:
KJP	KJP	SEH	SEH

JOB NO.: 2130336
CONTRACT: –
SCALE: –
CADD NO.: –

H3.01

FILE NO.: –

SHEET – OF

Z:\CT-Rocky Hill-Projects\Greenwich CT\Greenwich Parks and Recreation\Byram Park\CAD\MEP\HVAC\H3.01 HVAC Details.dwg

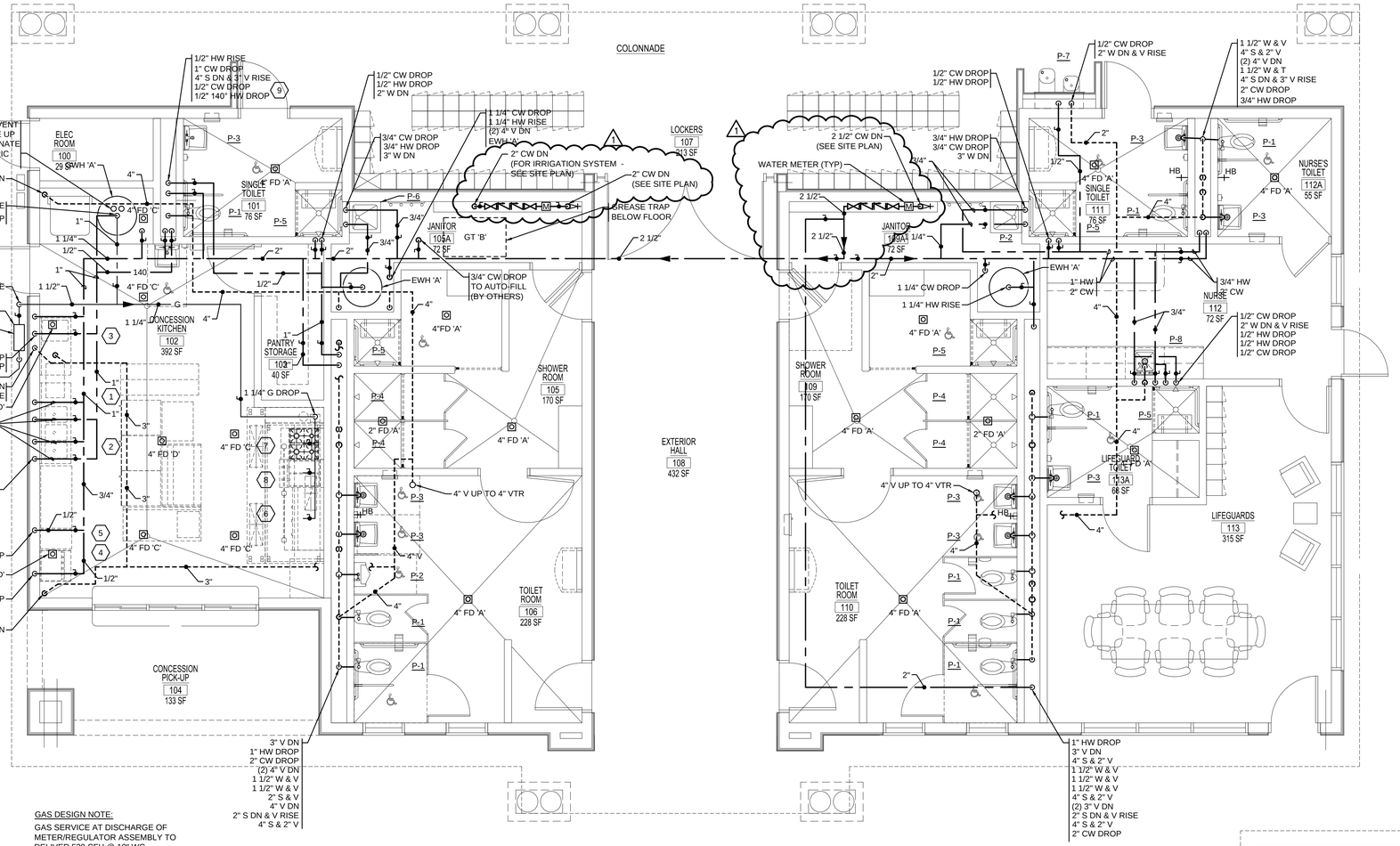

GAS DESIGN NOTE:

GAS SERVICE AT DISCHARGE OF METER/REGULATOR ASSEMBLY TO DELIVER 530 CFH @ 10" WC. PIPE SIZED OH 0.5" W.C. PRESSURE LOSS OVER A TOTAL EQUIVALENT LENGTH OF 50'.

KITCHEN EQUIPMENT TO BE PROVIDED BY OTHERS.

MAIN BUILDING FLOOR PLAN

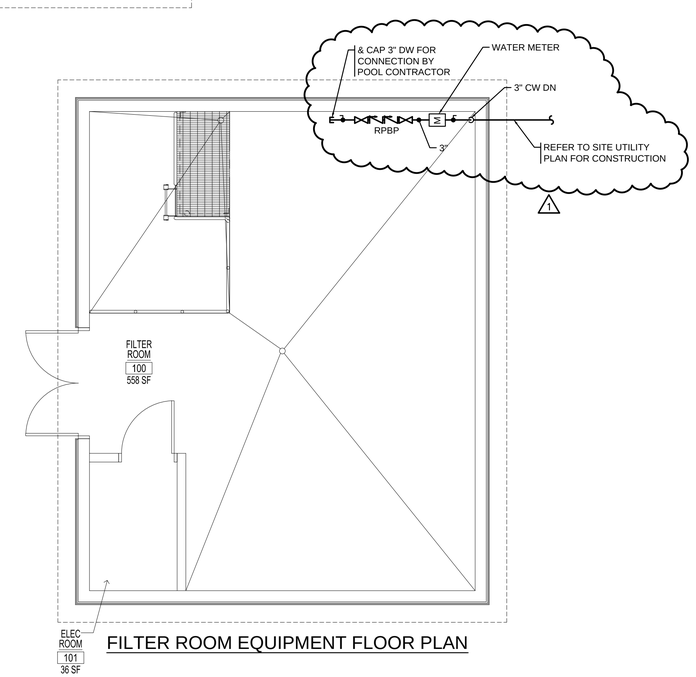

FILTER ROOM EQUIPMENT FLOOR PLAN

COPYRIGHT 2015 WESTON & SAMPSON

Z:\CT-Rockville-Projects\Greenwich CT\Greenwich Parks and Recreation\Byram Park\CAD\MEP\Plumbing\P1.01 PLUMBING FLOOR PLAN.dwg

Weston&Sampson®
273 Dividend Road, Rocky Hill CT 06067
(860) 513-1473 (800) SAMPSON
www.westonandsampson.com

No.	Date	Description	Dr By	Ck By	App By
1	03/03/16	ADDENDUM #1	KJP	SEH	SEH

APPROVED

REGISTERED PROFESSIONAL ENGINEER

5/4/2016
DATE

STATE OF CONNECTICUT REGISTERED PROFESSIONAL ENGINEER

TOWN OF GREENWICH – DEPARTMENT OF PUBLIC WORKS
RITCH AVENUE WEST, GREENWICH, CONNECTICUT
BYRAM PARK POOL REPLACEMENT

PLUMBING FLOOR PLAN

CADD NO.	SCALE:	CONTRACT:	JOB NO.	DR. BY	DSN BY	CHK BY	APP BY
–	1/4"=1'-0"		2130336	KJP	KJP	SEH	SEH

P1.01

FILE NO. –

SHEET – OF

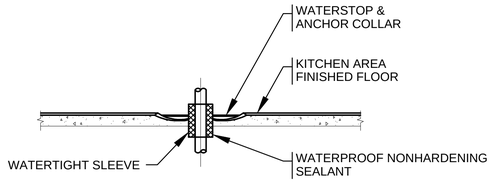

NOTE:

1. BANG WATERPROOF MEMBRANE TO UNDERSIDE OF ALL WATER STOPS & ANCHOR COLLARS

KITCHEN AREA SLEEVE

NO SCALE

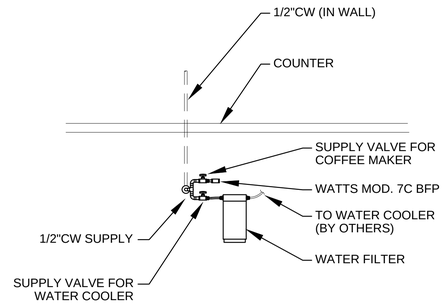

SUPPLY STOPS FOR KIT EQUIPMENT

NO SCALE

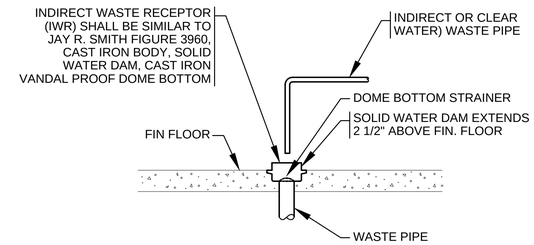

INDIRECT WASTE RECEPTOR

NO SCALE

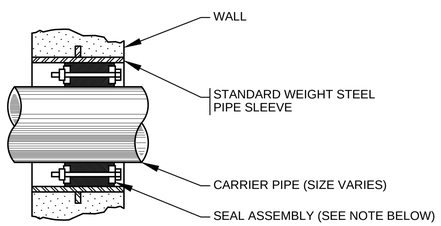

NOTES:

1. SEAL ASSEMBLY SHALL BE MODULAR MECHANICAL TYPE CONSISTING OF INTERLOCKING RUBBER LINKS SHAPED TO CONTINUOUSLY FILL IN THE ANNULAR SPACE BETWEEN PIPE & WALL OPENING
2. PRESSURE PLATES SHALL BE DELRIN PLASTIC
3. BOLTS & NUTS SHALL BE 18.8 STAINLESS STEEL
4. SEALING ELEMENT SHALL BE EPDM RUBBER

WATERTIGHT SLEEVE

NO SCALE

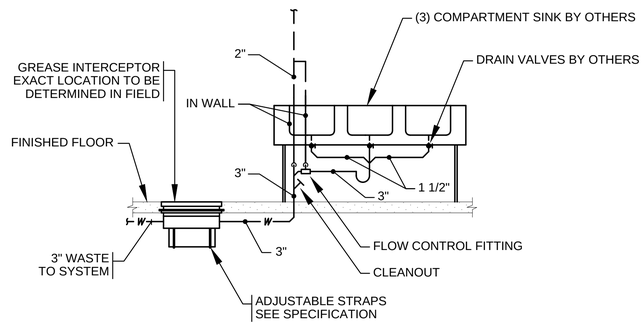

GREASE INTERCEPTOR

NO SCALE

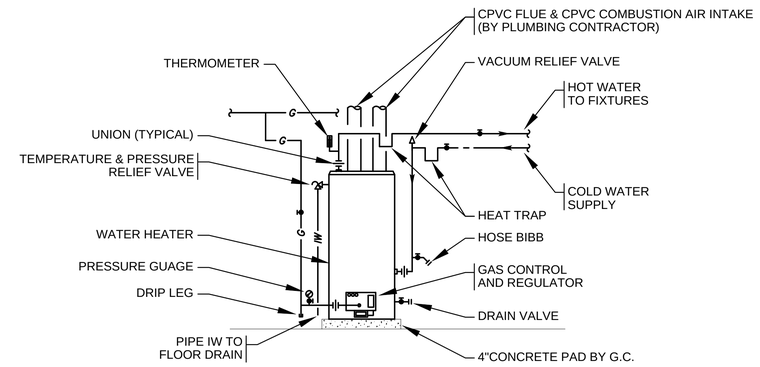

NOTE:

1. FOR PIPE SIZES REFER TO FLOOR PLANS
2. PIPE CONDENSATE TO NEAREST FLOOR DRAIN

GAS WATER HEATER DIAGRAM

NO SCALE

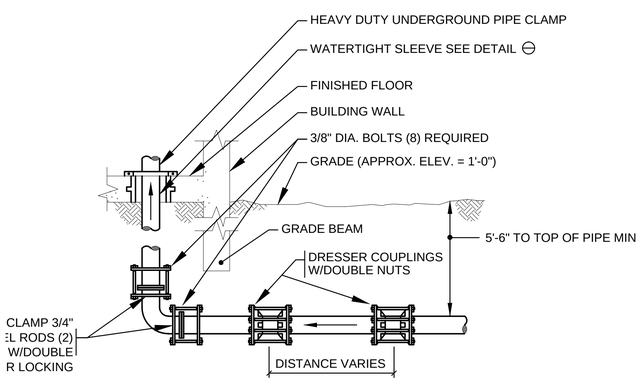

E:

YPICAL FOR DOMESTIC AND FIRE PROTECTION
ERVICES 4 INCHES AND LARGER.

WATER SERVICE ENTRANCE

NO SCALE

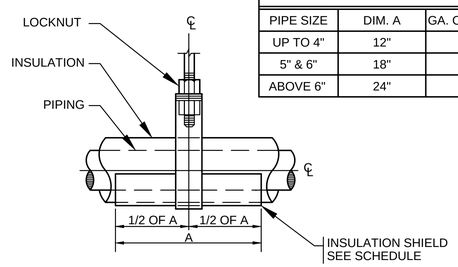

INSULATION SHIELD SCHEDULE		
PIPE SIZE	DIM. A	GA. OF STEEL
UP TO 4"	12"	18
5" & 6"	18"	16
ABOVE 6"	24"	14

PIPE HANGER/SHIELD DIAGRAM

NO SCALE

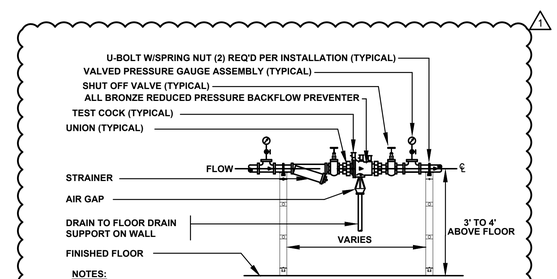

NOTES:

1. FURNISH TO OWNER (1) BACKFLOW PREVENTER TEST KIT AND SPARE PARTS KIT W/OPERATING & TEST PROCEDURES.
2. THIS CONTRACTOR SHALL ACT AS THE OWNERS AGENT IN SEEKING APPROVAL FROM ALL LOCAL AND STATE AUTHORITIES. THIS CONTRACTOR SHALL SUBMIT ALL PLANS, SPECS, AND APPLICATIONS REQUIRED FOR APPROVAL AND PAY ALL FEES.
3. SEE FLOOR PLANS FOR UNIT SIZES (THESE UNITS ARE 3/4" AND LONGER)
4. MAINTAIN 1'-0" CLERANCE FROM WALL.
5. TEST AND CERTIFY EACH INSTALLATIONS.

RPBFP DIAGRAM

NO SCALE

COPYRIGHT 2015 WESTON & SAMPSON

Weston&Sampson®
273 Dividend Road, Rocky Hill CT 06067
(860) 513-1473 (800) SAMPSON
www.westonandsampson.com

No.	Date	Dr. By	Ck. By	App. By	Description
1	03/03/16	KJP	SEH	SEH	ADDENDUM #1

APPROVED

REGISTERED PROFESSIONAL ENGINEER

5/4/2016
DATE

TOWN OF GREENWICH – DEPARTMENT OF PUBLIC WORKS
RITCH AVENUE WEST, GREENWICH, CONNECTICUT
BYRAM PARK POOL REPLACEMENT

PLUMBING DETAILS

CADD NO.	SCALE	CONTRACT:	JOB NO.	DR.BY	DSN.BY	CHK.BY	APP.BY
–	1/8"=1'-0"		21303336	KJP	KJP	SEH	SEH

FILE NO. –

P2.01

SHEET – OF

CONSTRUCTION DOCUMENTS
12/11/15

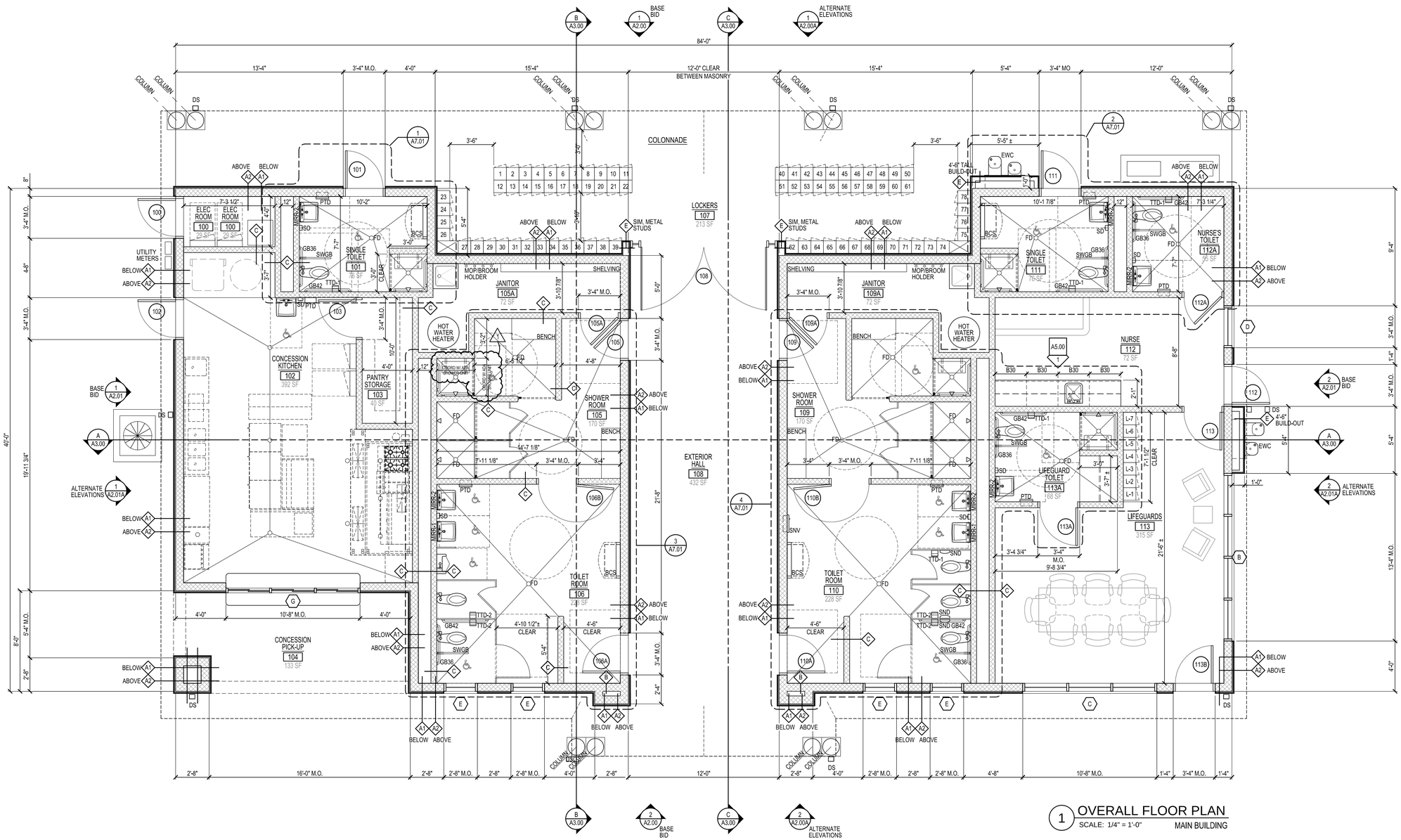

1 OVERALL FLOOR PLAN
SCALE: 1/4" = 1'-0"
MAIN BUILDING

GENERAL FLOOR PLAN NOTE:
FURNITURE AND KITCHEN EQUIPMENT ARE SHOWN DASHED - OUT OF CONTRACT

1/4" = 1'-0" 0 2' 4' 8'

PROJECT NORTH

Weston&Sampson®
273 Dividend Road, Rocky Hill, CT 06067
(860) 513-1473 (800) SAMPSON
www.westonandsampson.com

No.	Date	Dr.By	Ck.By	App.By	Description
1	03/03/16	BPM	JRC	DGT	ADDENDUM #1

APPROVED
DECEMBER 15, 2015
DATE
REGISTERED PROFESSIONAL ENGINEER

TOWN OF GREENWICH – DEPARTMENT OF PUBLIC WORKS
RITCH AVENUE WEST, GREENWICH, CONNECTICUT
BYRAM PARK POOL REPLACEMENT

OVERALL FLOOR PLAN – MAIN BUILDING

CADD NO.	SCALE:	CONTRACT:	JOB NO.	DR.BY	DSN.BY	CHK.BY	APP.BY
GREENWICH	VARIES	–	2130336	BPM	BPM	JRC	DGT

FILE NO. A1.00

SHEET – OF –

CONSTRUCTION DOCUMENTS
12/11/15

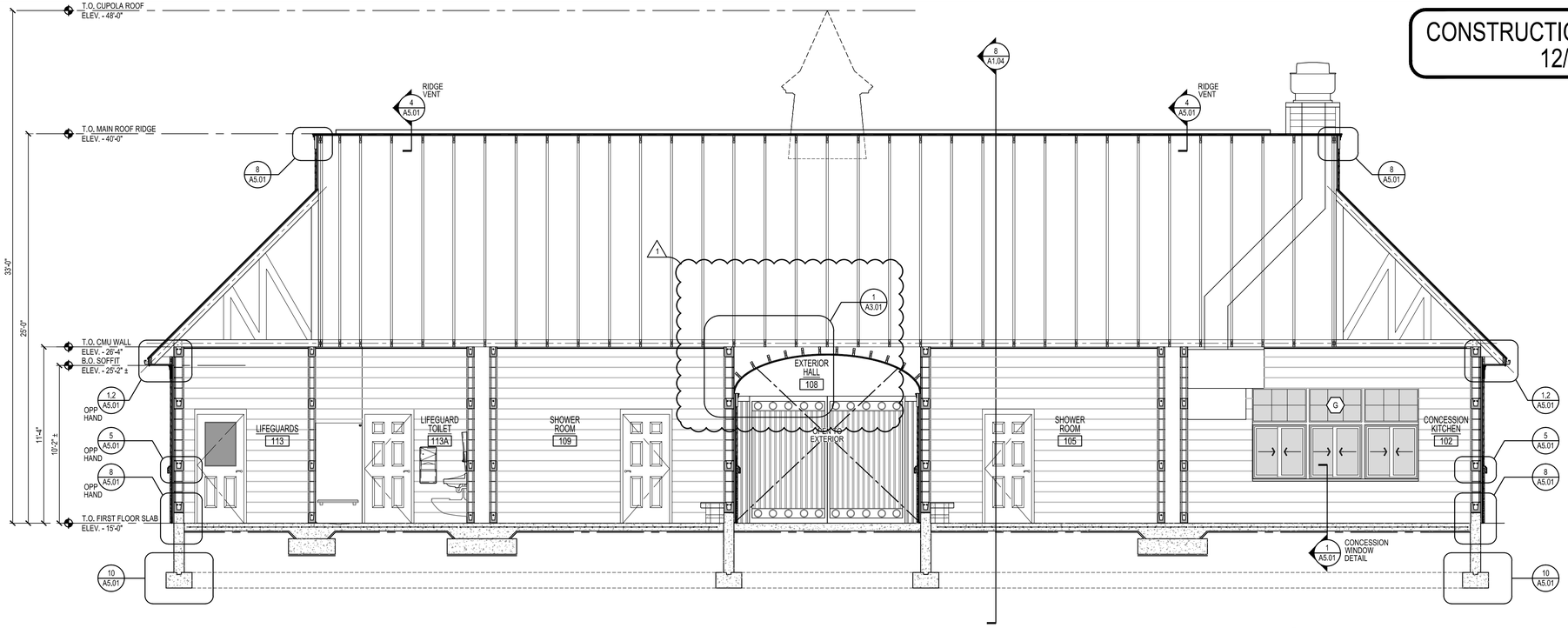

A BUILDING SECTION
SCALE: 1/4" = 1'-0" MAIN BUILDING

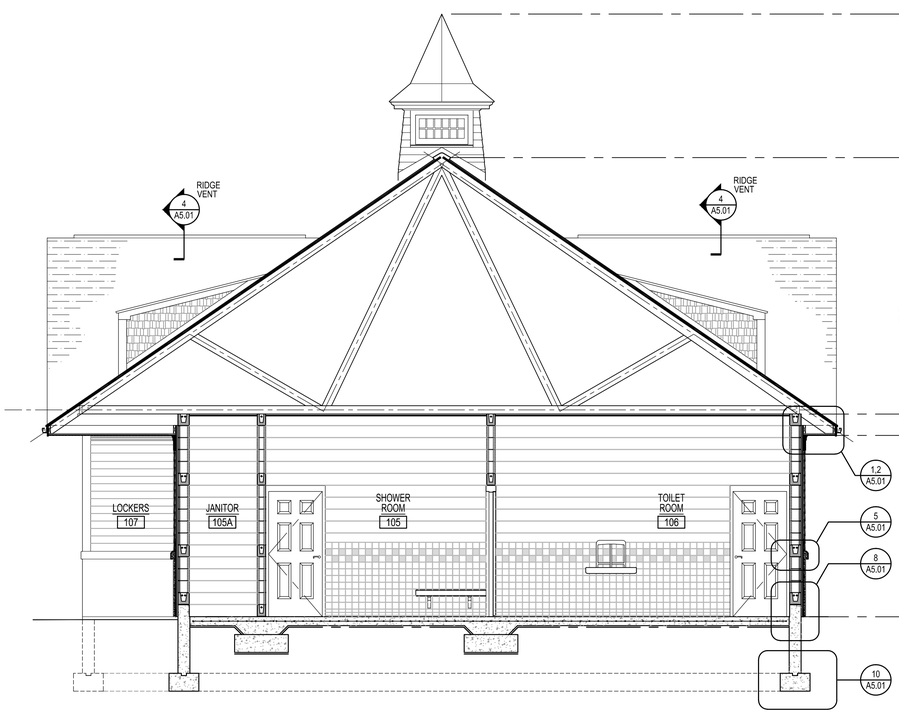

B BUILDING SECTION
SCALE: 1/4" = 1'-0" MAIN BUILDING

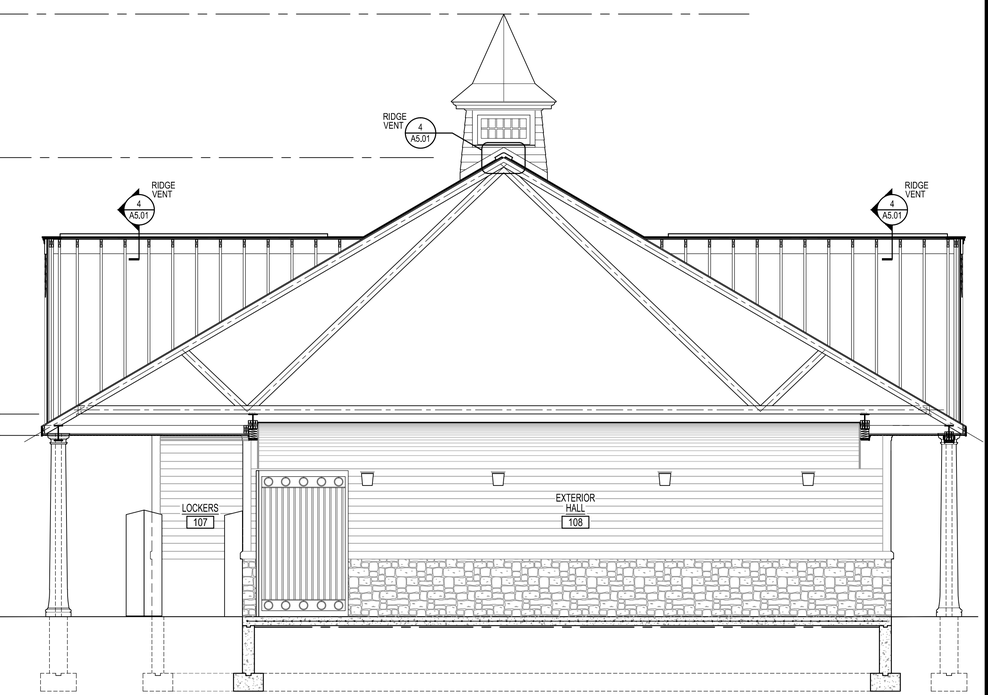

C BUILDING SECTION
SCALE: 1/4" = 1'-0" MAIN BUILDING

0 2' 4' 8'
1/4" = 1'-0"

Weston&Sampson®
273 Dividend Road, Rocky Hill, CT 06067
(860) 513-1473 (800) SAMPSON
www.westonandsampson.com

No.	Date	Dr.By	Ck.By	App.By	Description
1	03/03/16	BPM	JRC	DGT	ADDENDUM #1

A P P R O V E D
DECEMBER 15, 2015
DATE
REGISTERED PROFESSIONAL ENGINEER

STATE OF CONNECTICUT ★ DANIEL G. TENNEY ★ LICENSED ARCHITECT ★ No. 13,822

TOWN OF GREENWICH – DEPARTMENT OF PUBLIC WORKS
RITCH AVENUE WEST, GREENWICH, CONNECTICUT
BYRAM PARK POOL REPLACEMENT

BUILDING SECTION – MAIN BUILDING

CADD NO.	SCALE:	CONTRACT:	JOB NO.	DR.BY	DSN.BY	CHK.BY	APP.BY
GREENWICH	VARIES	–	2130336	BPM	BPM	JRC	DGT

FILE NO. A3.00

SHEET – OF –

CONSTRUCTION DOCUMENTS
12/11/15

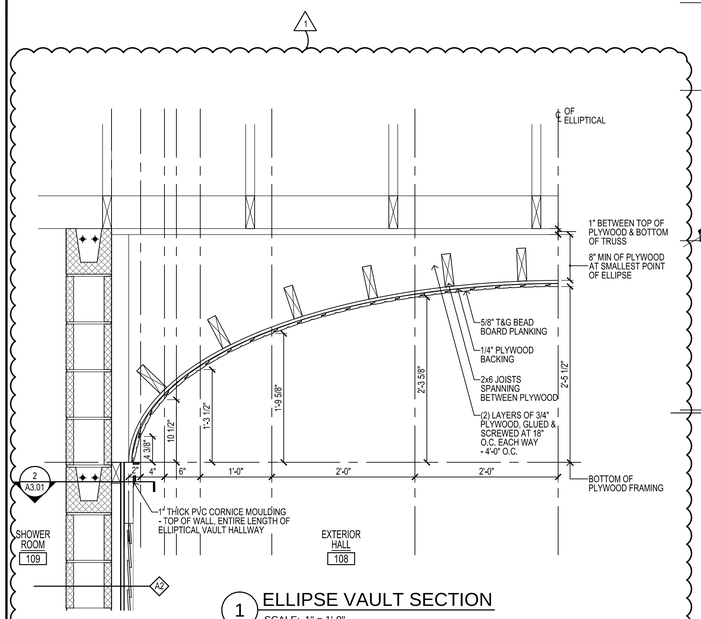

1 ELLIPSE VAULT SECTION
SCALE: 1" = 1'-0"

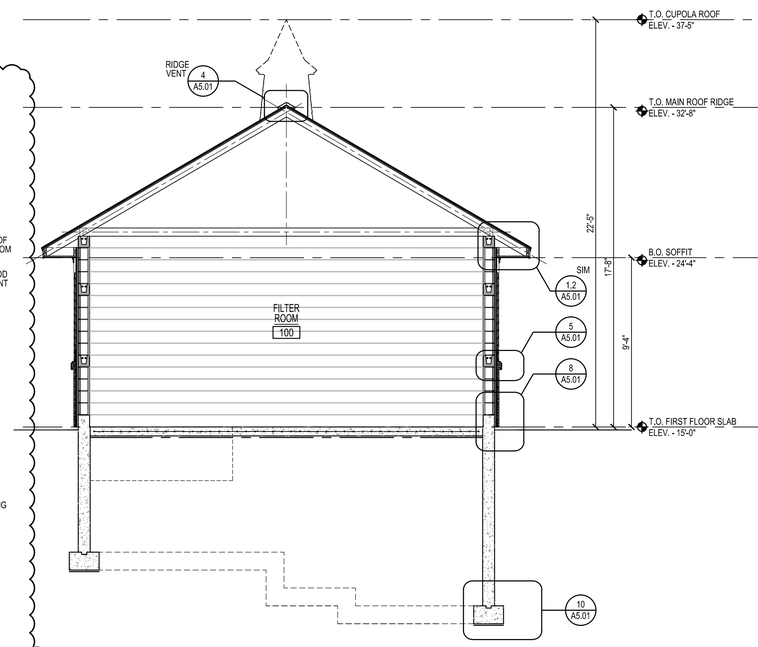

D BUILDING SECTION
SCALE: 1/4" = 1'-0" FILTER BUILDING

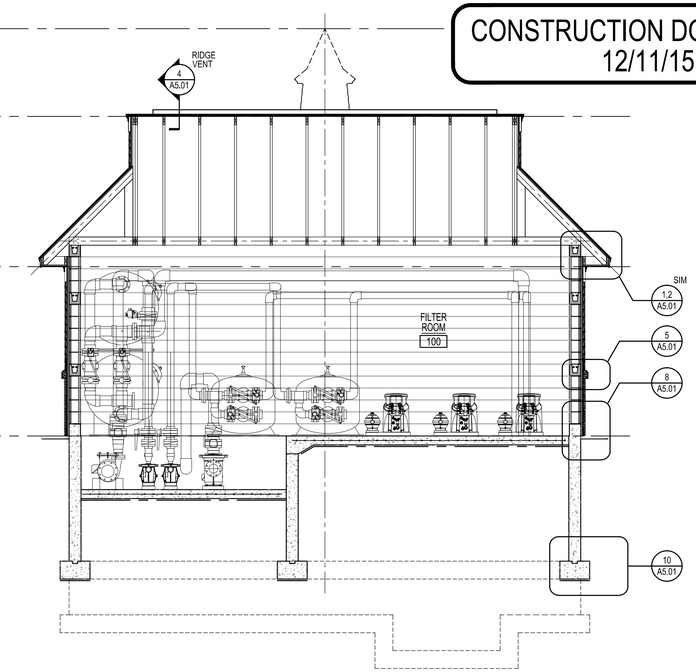

E BUILDING SECTION
SCALE: 1/4" = 1'-0" FILTER BUILDING

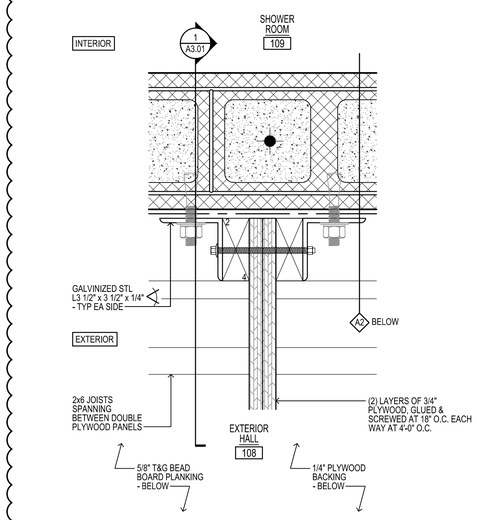

2 BRACKET DETAIL
SCALE: 3" = 1'-0"

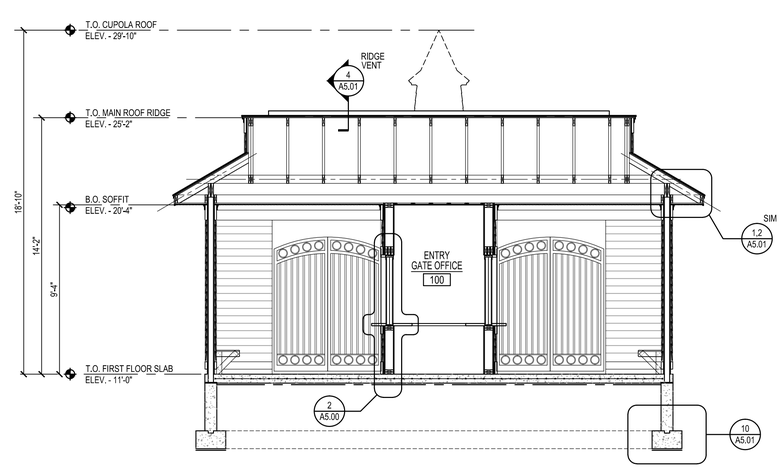

F BUILDING SECTION
SCALE: 1/4" = 1'-0" ENTRY GATE

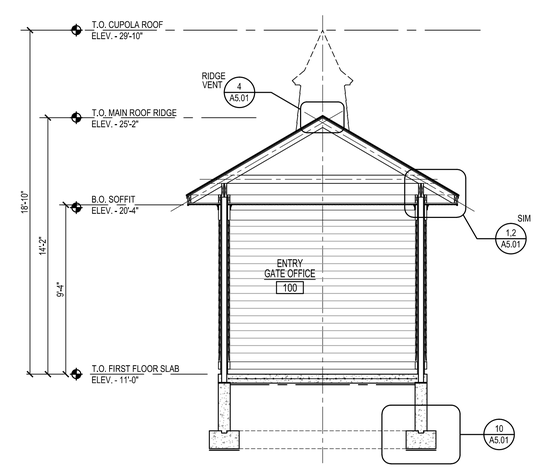

G BUILDING SECTION
SCALE: 1/4" = 1'-0" ENTRY GATE

GENERAL NOTE:
THE WALLS WILL BE CONSTRUCTED FOLLOWING FEMA TECHNICAL BULLETIN 9 FOR BREAK AWAY WALLS. ONLY AT ENTRY GATE BUILDING. STRUCTURAL STEEL FRAME WILL REMAIN IN A STORM EVENT. REFER TO STRUCT DWGS FOR STEEL FRAME CONSTRUCTION.

1/4" = 1'-0" 0 2' 4' 8'

Weston&Sampson®
273 Dividend Road, Rocky Hill, CT 06067
(860) 513-1473 (800) SAMPSON
www.westonandsampson.com

No.	Date	Dr.By	Ck.By	App.By	Description
1	03/03/16	BPM	JRC	DGT	ADDENDUM #1

APPROVED
DECEMBER 15, 2015
DATE
REGISTERED PROFESSIONAL ENGINEER

STATE OF CONNECTICUT * DANIEL G. TERNEY III * LICENSED ARCHITECT No. 22364

TOWN OF GREENWICH – DEPARTMENT OF PUBLIC WORKS
RITCH AVENUE WEST, GREENWICH, CONNECTICUT
BYRAM PARK POOL REPLACEMENT

BUILDING SECTION – ENTRY GATE & FILTER BLDG

CADD NO.	SCALE:	CONTRACT:	JOB NO.	DR.BY	DSN.BY	CHK.BY	APP.BY
GREENWICH	VARIES	–	2130336	BPM	BPM	JRC	DGT

FILE NO. A3.01

SHEET – OF –

DOOR TYPES
3/8" = 1'-0"

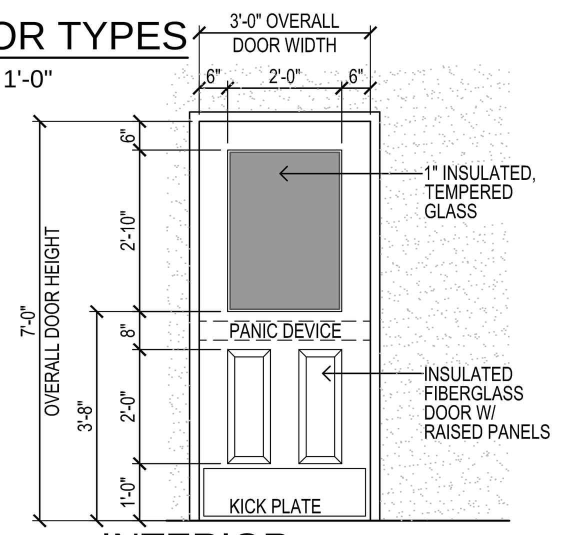

1 INTERIOR DOOR ELEVATION
SCALE: 3/8" = 1'-0" (TYPICAL PUBLIC DOOR FROM INTERIOR)

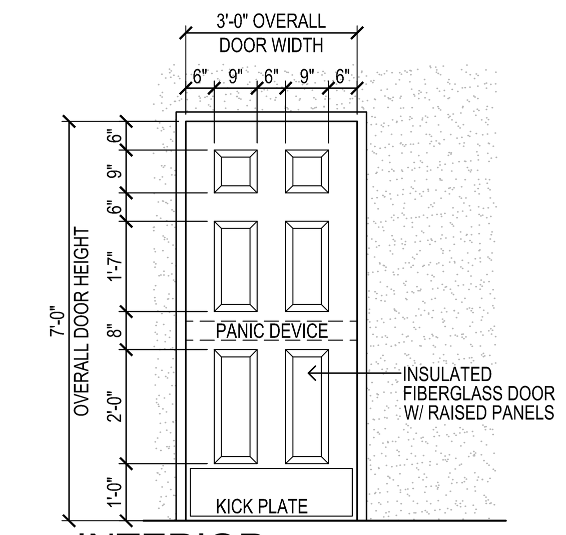

2 INTERIOR DOOR ELEVATION
SCALE: 3/8" = 1'-0" (TYPICAL PRIVATE DOOR FROM INTERIOR)

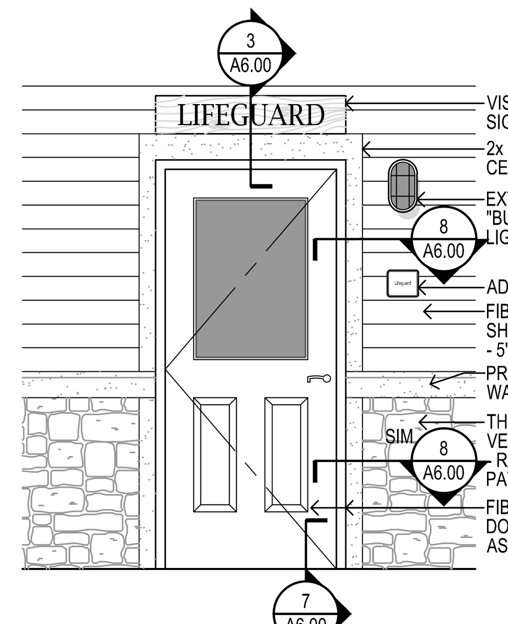

3 EXTERIOR DOOR ELEVATION
SCALE: 3/8" = 1'-0" (TYPICAL PUBLIC DOOR FROM EXTERIOR)

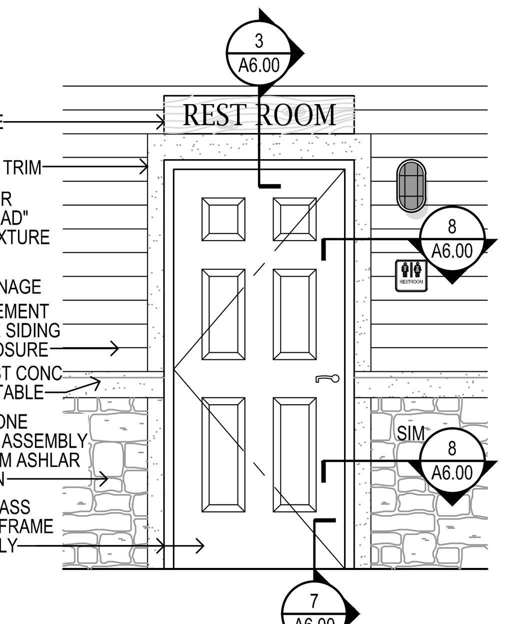

4 EXTERIOR DOOR ELEVATION
SCALE: 3/8" = 1'-0" (TYPICAL PRIVATE DOOR FROM EXTERIOR)

ROOM FINISH SCHEDULE

ROOM		FLOOR			WALLS								CEILING				REMARKS
#	NAME	MAT	FIN	BASE	MAT - NORTH	FIN - NORTH	MAT - SOUTH	FIN - SOUTH	MAT - EAST	FIN - EAST	MAT - WEST	FIN - WEST	MAT	FIN	HGT	TYPE	
POOL BLDG																	
100	ELEC ROOM	CONC	-	-	CMU	PNT	CMU	PNT	CMU	PNT	CMU	PNT	GYP BD	PNT	11'-2" ±	-	-
101	SINGLE TOILET	CONC	RES FLR SYSTEM	RES BASE SYSTEM	CMU	PNT/CT	CMU	PNT/CT	CMU	PNT/CT	CMU	PNT/CT	GYP BD	PNT	11'-2" ±	-	1.
102	CONCESSION KITCHEN	CONC	6x6 QUARRY TILE	6" QUARRY TILE BASE	CMU	PNT/FRP	CMU	PNT/FRP	CMU	PNT/FRP	CMU	PNT/FRP	GYP BD	PNT	11'-2" ±	-	-
103	PANTRY STORAGE	CONC	6x6 QUARRY TILE	6" QUARRY TILE BASE	CMU	PNT/FRP	CMU	PNT/FRP	CMU	PNT/FRP	CMU	PNT/FRP	GYP BD	PNT	11'-2" ±	-	-
104	CONCESSION PICK-UP	CONC	-	-	FIBER CEMENT SIDING	-	FIBER CEMENT SIDING / ALUM	- / -	FIBER CEMENT SIDING	-	FIBER CEMENT SIDING / ALUM	- / -	GYP BD	PNT	11'-2" ±	-	-
105	SHOWER ROOM	CONC	RES FLR SYSTEM	RES BASE SYSTEM	CMU	PNT/CT	CMU	PNT/CT	CMU	PNT/CT	CMU	PNT/CT	GYP BD	PNT	11'-2" ±	-	1.
105A	JANITOR	CONC	RES FLR SYSTEM	RES BASE SYSTEM	CMU	PNT/CT	CMU	PNT/CT	CMU	PNT/CT	CMU	PNT/CT	GYP BD	PNT	11'-2" ±	-	1.
106	TOILET ROOM	CONC	RES FLR SYSTEM	RES BASE SYSTEM	CMU	PNT/CT	CMU	PNT/CT	CMU	PNT/CT	CMU	PNT/CT	GYP BD	PNT	11'-2" ±	-	1.
107	LOCKERS	CONC	-	-	-	-	FIBER CEMENT SIDING	-	FIBER CEMENT SIDING	-	FIBER CEMENT SIDING	-	PVC BEAD BOARD	-	10'-2" ±	-	-
108	EXTERIOR HALL	CONC	-	-	-	-	-	-	FIBER CEMENT SIDING	-	FIBER CEMENT SIDING	-	PVC BEAD BOARD	-	VARIES 8'-4± - 10'-10"±	-	-
109	SHOWER ROOM	CONC	RES FLR SYSTEM	RES BASE SYSTEM	CMU	PNT/CT	CMU	PNT/CT	CMU	PNT/CT	CMU	PNT/CT	GYP BD	PNT	11'-2" ±	-	1.
109A	JANITOR	CONC	RES FLR SYSTEM	RES BASE SYSTEM	CMU	PNT/CT	CMU	PNT/CT	CMU	PNT/CT	CMU	PNT/CT	GYP BD	PNT	11'-2" ±	-	1.
110	TOILET ROOM	CONC	RES FLR SYSTEM	RES BASE SYSTEM	CMU	PNT/CT	CMU	PNT/CT	CMU	PNT/CT	CMU	PNT/CT	GYP BD	PNT	11'-2" ±	-	1.
111	SINGLE TOILET	CONC	RES FLR SYSTEM	RES BASE SYSTEM	CMU	PNT/CT	CMU	PNT/CT	CMU	PNT/CT	CMU	PNT/CT	GYP BD	PNT	11'-2" ±	-	1.
112	NURSE	CONC	CARPET TILE	RUBBER BASE	CMU	PNT	CMU	PNT	CMU	PNT	CMU	PNT	GYP BD	PNT	11'-2" ±	-	-
112A	NURSE'S TOILET	CONC	RES FLR SYSTEM	RES BASE SYSTEM	CMU	PNT/CT	CMU	PNT/CT	CMU	PNT/CT	CMU	PNT/CT	GYP BD	PNT	11'-2" ±	-	1.
113	LIFEGUARDS	CONC	CARPET TILE	RUBBER BASE	CMU	PNT	CMU	PNT	CMU	PNT	CMU	PNT	GYP BD	PNT	11'-2" ±	-	-
114	LIFEGUARD'S TOILET	CONC	RES FLR SYSTEM	RES BASE SYSTEM	CMU	PNT/CT	CMU	PNT/CT	CMU	PNT/CT	CMU	PNT/CT	GYP BD	PNT	11'-2" ±	-	1.
FILTER BLDG																	
100	FILTER ROOM	CONC	-	-	CMU	PNT	CMU	PNT	CMU	PNT	CMU	PNT	OTS	-	11'-4"	-	-
101	ELEC ROOM	CONC	-	-	CMU	PNT	CMU	PNT	CMU	PNT	CMU	PNT	OTS	-	11'-4"	-	-
ENTRY GATE																	
100	ENTRY GATE OFFICE	CONC	-	-	GYP	PNT	GYP	PNT	GYP	PNT	GYP	PNT	GYP BD	PNT	9'-6" ±	-	-

REMARKS:

1. PROVIDE EPOXY FLOOR SYSTEM WITH HIGH ADHESION EQUAL TO "SIKAFLOOR-156/-161 PRIMER BROADCAST WITH QUARTZ SAND AND SIKAFLOOR-20 PURCEM SCREED" AS MANUF. BY SIKA CORP OR APPROVED EQUAL.

DOOR SCHEDULE

NO.	DOOR				FRAME										HW SET	LBL	REMARKS
	SIZE	TYPE	MAT	FIN	TYPE	MAT	FIN	HEAD BASE BID	JAMB BASE BID	SILL BASE BID	HEAD ALTERNATE	JAMB ALTERNATE	SILL ALTERNATE	WIDTH			
POOL BLDG																	
100	3'-0" x 7'-0" x 1 3/4"	D1	FIBER-GLASS	PRE-FINISHED	F1	FIBER-GLASS	PRE-FINISHED	3 / A6.00	8 / A6.00	7 / A6.00	9 / A6.02A	10 / A6.02A	9 / A6.02A	8-5/8	1	-	2
101	3'-0" x 7'-0" x 1 3/4"	D1	FIBER-GLASS	PRE-FINISHED	F1	FIBER-GLASS	PRE-FINISHED	3 / A6.00	8 / A6.00	7 / A6.00	9 / A6.02A	10 / A6.02A	9 / A6.02A	8-5/8	3	-	2
102	3'-0" x 7'-0" x 1 3/4"	D1	FIBER-GLASS	PRE-FINISHED	F1	FIBER-GLASS	PRE-FINISHED	3 / A6.00	8 / A6.00	7 / A6.00	9 / A6.02A	10 / A6.02A	9 / A6.02A	8-5/8	1	-	2
103	3'-0" x 7'-0" x 1 3/4"	D3	HM	PNT	F1	HM	PNT	1 / A6.00	2 / A6.00	-	-	-	-	6-5/8	2	-	
104	NOT USED																
105	3'-0" x 7'-0" x 1 3/4"	D1	FIBER-GLASS	PRE-FINISHED	F1	FIBER-GLASS	PRE-FINISHED	3 / A6.00	8 / A6.00	7 / A6.00	9 / A6.02A	10 / A6.02A	9 / A6.02A	8-5/8	1	-	2
105A	3'-0" x 7'-0" x 1 3/4"	D3	HM	PNT	F1	HM	PNT	1 / A6.00	2 / A6.00	-	-	-	-	6-5/8	2	-	
106A	3'-0" x 7'-0" x 1 3/4"	D1	FIBER-GLASS	PRE-FINISHED	F1	FIBER-GLASS	PRE-FINISHED	3 / A6.00	8 / A6.00	7 / A6.00	9 / A6.02A	10 / A6.02A	9 / A6.02A	8-5/8	1	-	2
106B	3'-0" x 7'-0" x 1 3/4"	D3	HM	PNT	F1	HM	PNT	1 / A6.00	2 / A6.00	-	-	-	-	6-5/8	2	-	
108	PAIR OF 5'-0" x 8'-0"	D4	MTL	PNT	F3	MTL	PNT	-	-	-	-	-	-	-	-	-	1
109	3'-0" x 7'-0" x 1 3/4"	D1	FIBER-GLASS	PRE-FINISHED	F1	FIBER-GLASS	PRE-FINISHED	3 / A6.00	8 / A6.00	7 / A6.00	9 / A6.02A	10 / A6.02A	9 / A6.02A	8-5/8	1	-	2
109A	3'-0" x 7'-0" x 1 3/4"	D3	HM	PNT	F1	HM	PNT	1 / A6.00	2 / A6.00	-	-	-	-	6-5/8	2	-	
110A	3'-0" x 7'-0" x 1 3/4"	D1	FIBER-GLASS	PRE-FINISHED	F1	FIBER-GLASS	PRE-FINISHED	3 / A6.00	8 / A6.00	7 / A6.00	9 / A6.02A	10 / A6.02A	9 / A6.02A	8-5/8	1	-	2
110B	3'-0" x 7'-0" x 1 3/4"	D3	HM	PNT	F1	HM	PNT	1 / A6.00	2 / A6.00	-	-	-	-	6-5/8	2	-	
111	3'-0" x 7'-0" x 1 3/4"	D1	FIBER-GLASS	PRE-FINISHED	F1	FIBER-GLASS	PRE-FINISHED	3 / A6.00	8 / A6.00	7 / A6.00	9 / A6.02A	10 / A6.02A	9 / A6.02A	8-5/8	3	-	2
112	3'-0" x 7'-0" x 1 3/4"	D1	FIBER-GLASS	PRE-FINISHED	F1	FIBER-GLASS	PRE-FINISHED	3 / A6.00	8 / A6.00	7 / A6.00	9 / A6.02A	10 / A6.02A	9 / A6.02A	8-5/8	1	-	2
112A	3'-0" x 7'-0" x 1 3/4"	D3	HM	PNT	F1	HM	PNT	1 / A6.00	2 / A6.00	-	-	-	-	6-5/8	4	-	
113	3'-0" x 7'-0" x 1 3/4"	D1	HM	PNT	F1	HM	PNT	1 / A6.00	2 / A6.00	-	-	-	-	6-5/8	4	-	
113A	3'-0" x 7'-0" x 1 3/4"	D3	HM	PNT	F1	HM	PNT	1 / A6.00	2 / A6.00	-	-	-	-	6-5/8	4	-	
113B	3'-0" x 7'-0" x 1 3/4"	D3	FIBER-GLASS	PRE-FINISHED	F1	FIBER-GLASS	PRE-FINISHED	3 / A6.00	8 / A6.00	7 / A6.00	9 / A6.02A	10 / A6.02A	9 / A6.02A	8-5/8	1	-	2, 3
PUMP BLDG																	
100	PAIR OF 3'-0" x 7'-0" x 1 3/4"	D1	FIBER-GLASS	PRE-FINISHED	F1	FIBER-GLASS	PRE-FINISHED	3 / A6.00	8 / A6.00	7 / A6.00	9 / A6.02A	10 / A6.02A	9 / A6.02A	8-5/8	1	-	2
101	3'-0" x 7'-0" x 1 3/4"	D3	HM	PNT	F1	HM	PNT	1 / A6.00	2 / A6.00	-	-	-	-	8-5/8	2	-	
ENTRY GATE																	
100	3'-0" x 7'-0" x 1 3/4"	D1	FIBER-GLASS	PRE-FINISHED	F1	FIBER-GLASS	PRE-FINISHED	4 / A6.00	5 / A6.00	9 / A6.00	-	-	-	8-1/4"	1	-	2
101A	PAIR OF 3'-0" x 7'-6"	D4	MTL	PNT	F3	MTL	PNT	-	-	-	-	-	-	-	-	-	1
101B	PAIR OF 3'-0" x 7'-6"	D4	MTL	PNT	F3	MTL	PNT	-	-	-	-	-	-	-	-	-	1

REMARKS:

1. ENTRY GATE, REFER TO DETAIL 3/A6.03 FOR DESIGN INTENT.
2. PROVIDE THERMALLY BROKEN FIBERGLASS EXTERIOR DOOR FRAME AND INSULATED FIBERGLASS DOOR.
3. PROVIDE RAIN CAP / DRIP EDGE ON OUT-SWINGING DOOR.

1

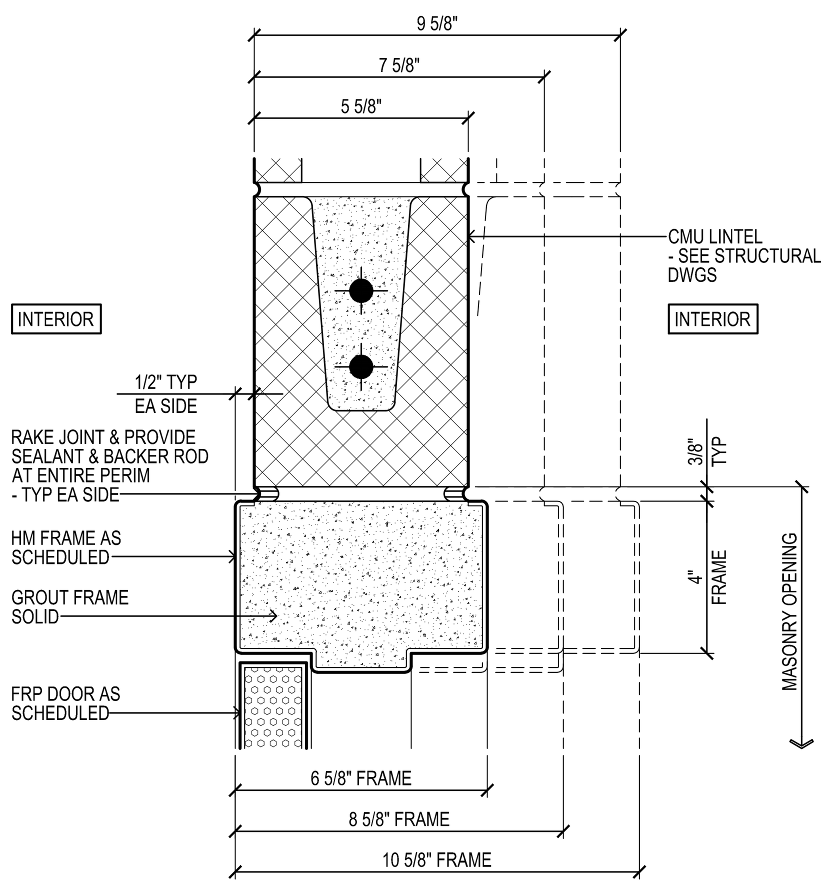

1 DOOR HEAD DETAIL
SCALE: 3" = 1'-0"

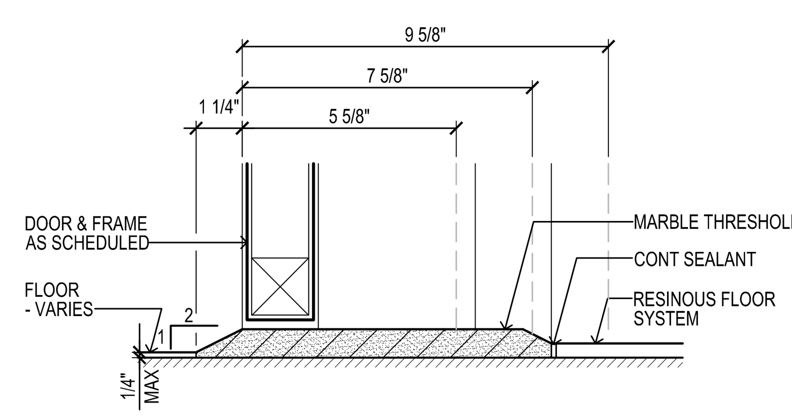

6 MARBLE THRESHOLD
SCALE: 3" = 1'-0"
8" CMU WALL SHOWN - 6" & 10" CMU WALL THRESHOLD, SIMILAR
S2

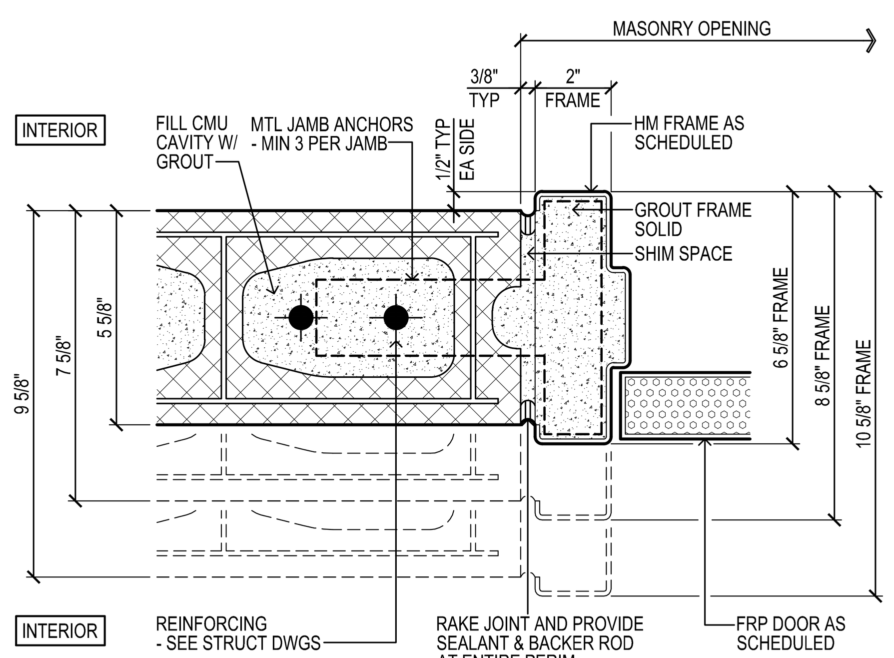

2 DOOR JAMB DETAIL
SCALE: 3" = 1'-0"

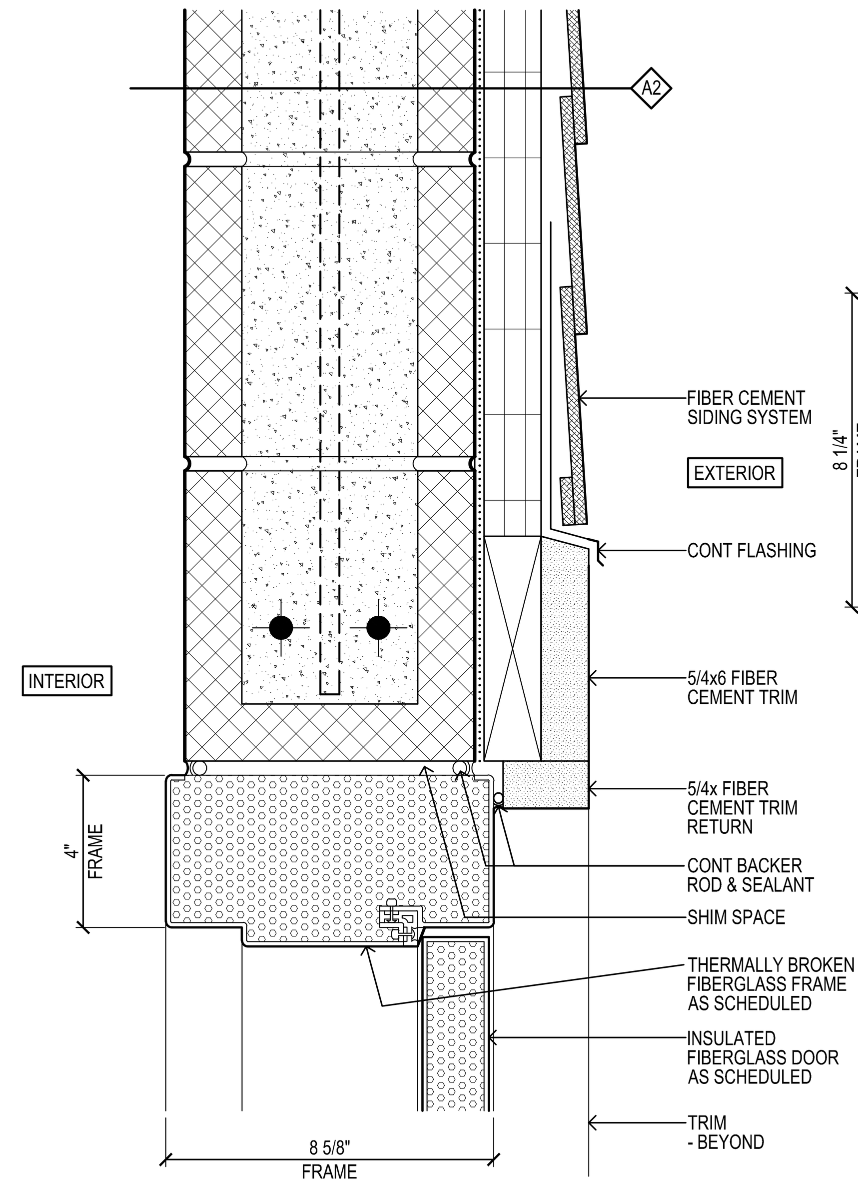

3 DOOR HEAD
SCALE: 3" = 1'-0"

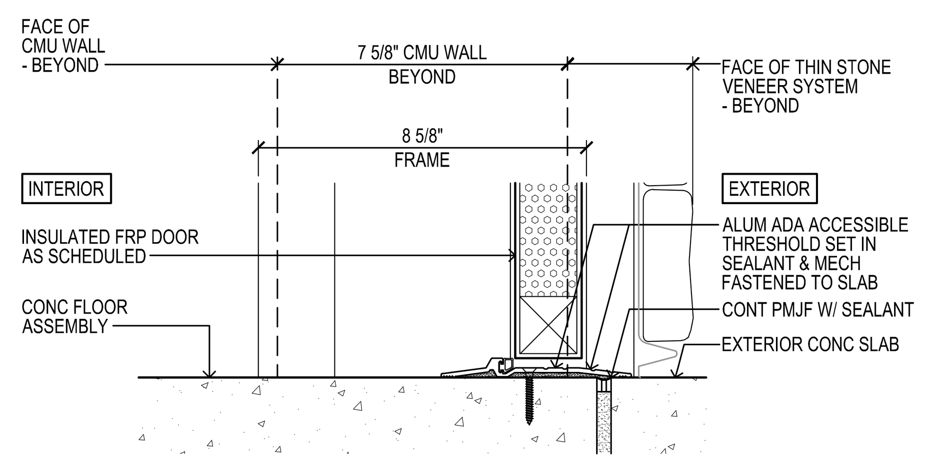

7 EXTERIOR DOOR SILL DETAIL
SCALE: 3" = 1'-0"
S1

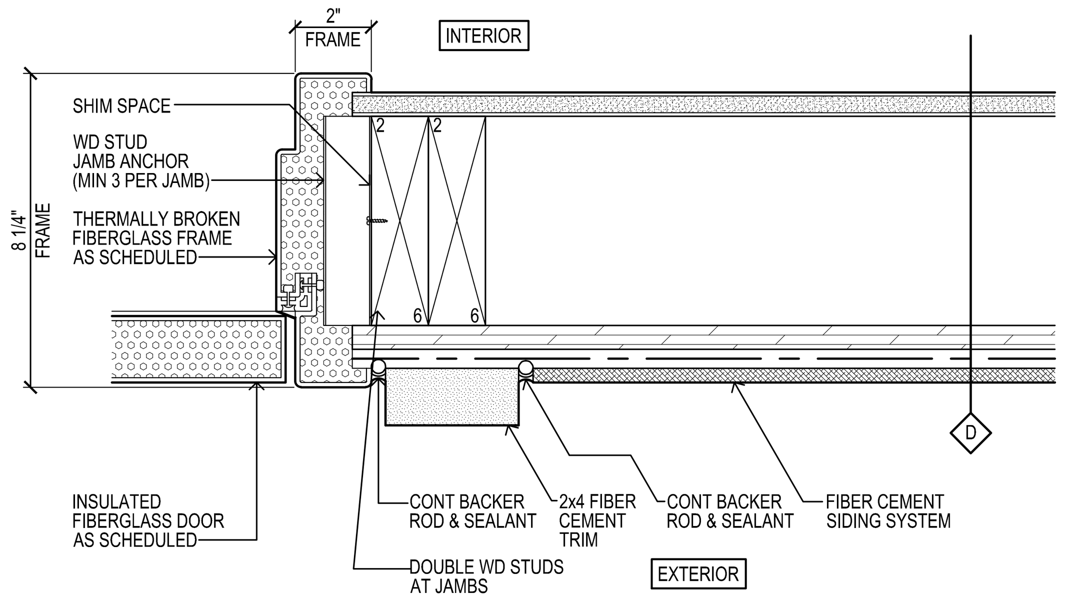

4 DOOR JAMB DETAIL
SCALE: 3" = 1'-0"

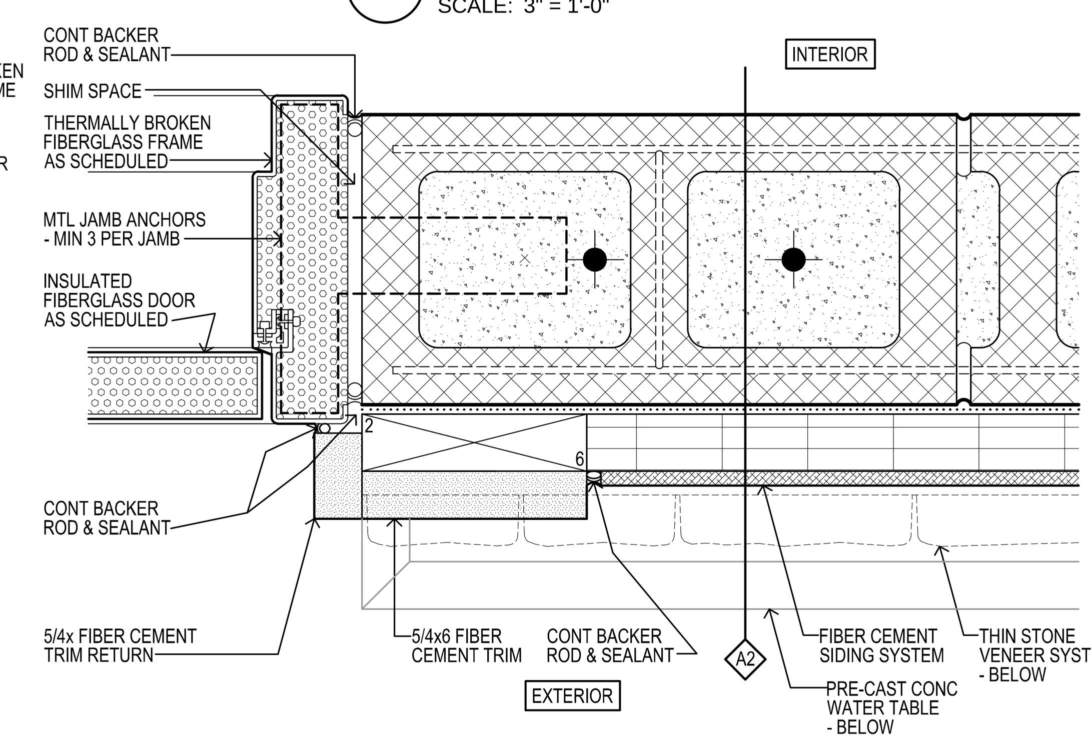

8 DOOR JAMB
SCALE: 3" = 1'-0"

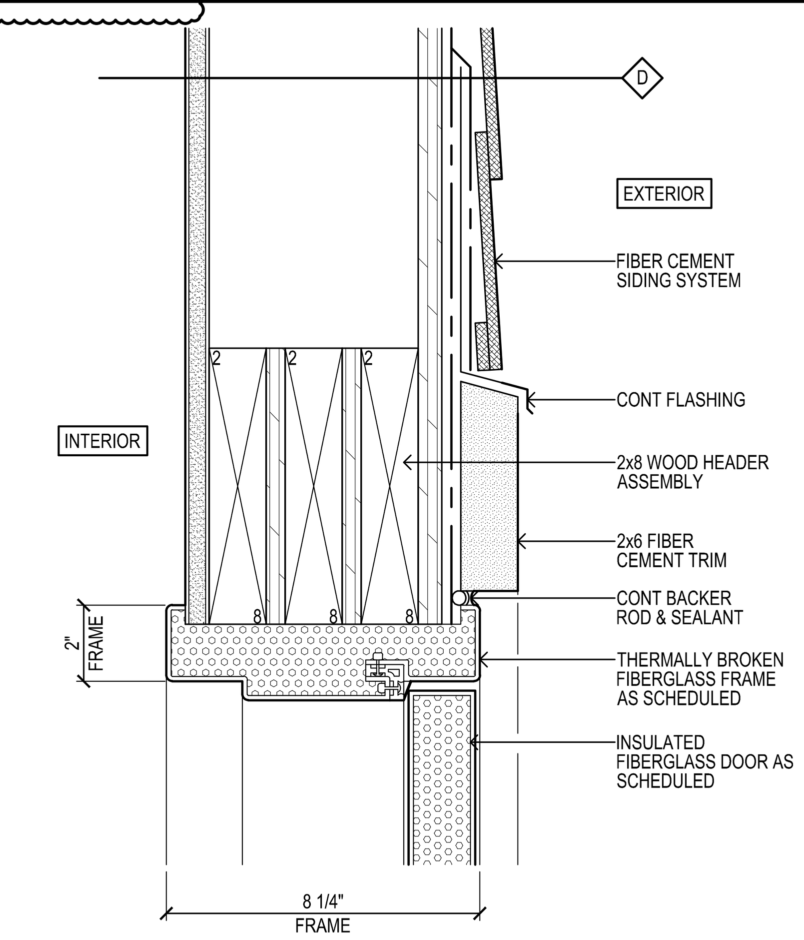

5 DOOR HEAD DETAIL
SCALE: 3" = 1'-0"

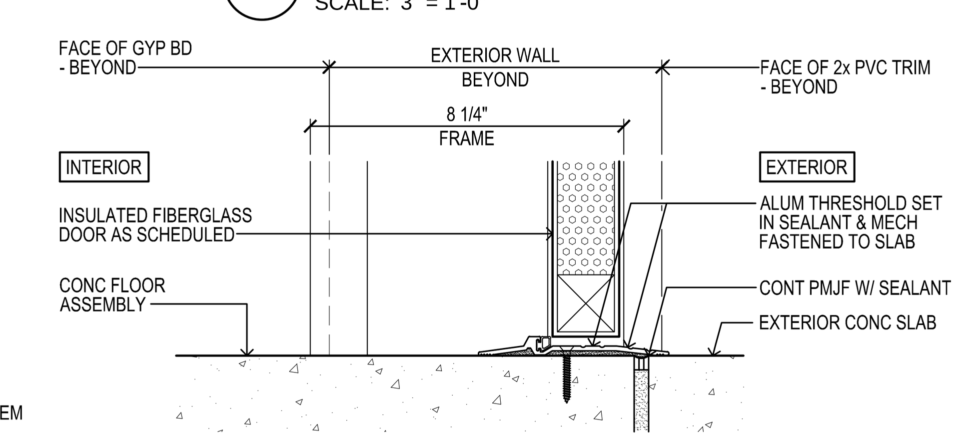

9 EXTERIOR DOOR SILL DETAIL
SCALE: 3" = 1'-0"
S1

CONSTRUCTION DOCUMENTS
12/11/15

Weston&Sampson®
273 Dividend Road, Rocky Hill, CT 06067
(860) 513-1473 (800) SAMPSON
www.westonandsampson.com

No.	Date	Dr.By	Ck.By	App.By	Description
1	03/03/16	BPM	JRC	DGT	ADDENDUM #1

A P P R O V E D
REGISTERED PROFESSIONAL ENGINEER
DECEMBER 15, 2015
DATE

STATE OF CONNECTICUT ★ DANIEL G. TENNEY III ★ No. 12264 LICENSED ARCHITECT

TOWN OF GREENWICH – DEPARTMENT OF PUBLIC WORKS
RITCH AVENUE WEST, GREENWICH, CONNECTICUT
BYRAM PARK POOL REPLACEMENT

ROOM FINISH & DOOR SCHEDULE AND DOOR DETAILS

CADD NO.	SCALE:	CONTRACT:	JOB NO.	DR.BY	DSN.BY	CHK.BY	APP.BY
GREENWICH	VARIES	–	2130336	BPM	BPM	JRC	DGT

FILE NO.
A6.00
SHEET – OF –

CONSTRUCTION DOCUMENTS
12/11/15

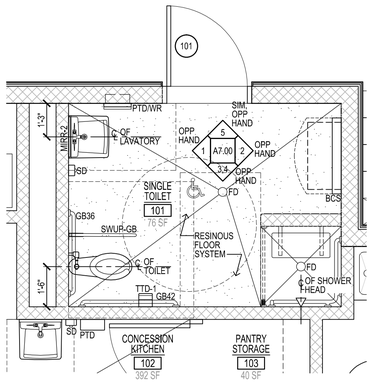

1 LARGE SCALE
UNISEX BATHROOM
SCALE: 3/8" = 1'-0"

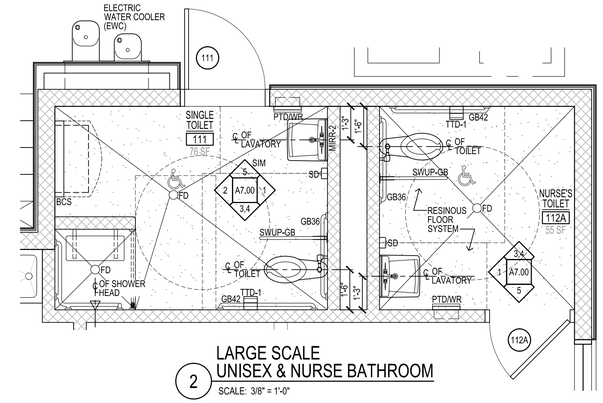

2 LARGE SCALE
UNISEX & NURSE BATHROOM
SCALE: 3/8" = 1'-0"

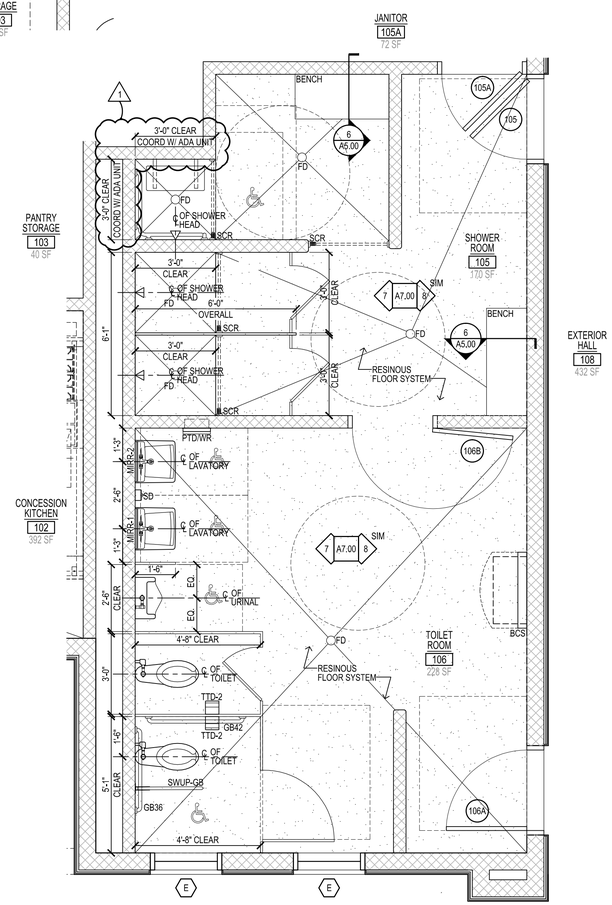

3 LARGE SCALE
GANG BATHROOM
SCALE: 3/8" = 1'-0"

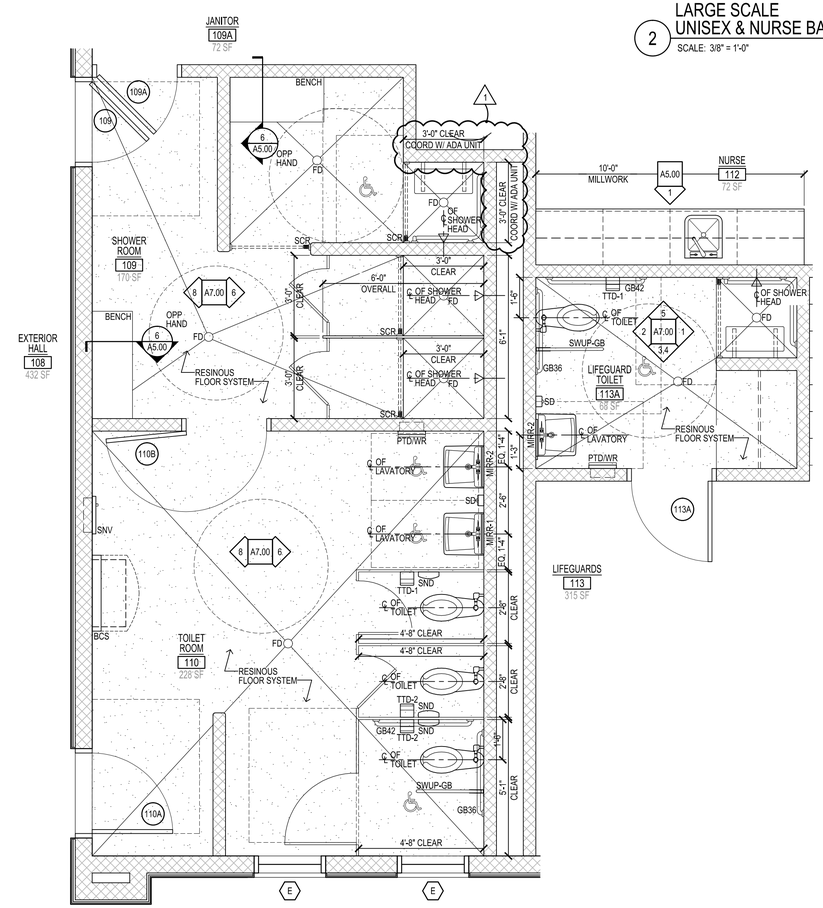

4 LARGE SCALE
GANG BATHROOM
SCALE: 3/8" = 1'-0"

Weston&Sampson®
273 Dividend Road, Rocky Hill, CT 06067
(860) 513-1473 (800) SAMPSON
www.westonandsampson.com

No.	Date	Dr.By	Ck.By	App.By	Description
1	03/03/16	BPM	JRC	DGT	ADDENDUM #1

A P P R O V E D
DECEMBER 15, 2015
DATE
REGISTERED PROFESSIONAL ENGINEER

STATE OF CONNECTICUT
DAVID G. TENNEY III
LICENSED ARCHITECT

TOWN OF GREENWICH – DEPARTMENT OF PUBLIC WORKS
RITCH AVENUE WEST, GREENWICH, CONNECTICUT
BYRAM PARK POOL REPLACEMENT

LARGE SCALE BATHROOM FLOOR PLANS

CADD NO.	SCALE:	CONTRACT:	JOB NO.	DR.BY	DSN.BY	CHK.BY	APP.BY
GREENWICH	VARIES	–	2130336	BPM	BPM	JRC	DGT

FILE NO. A7.01

SHEET – OF –

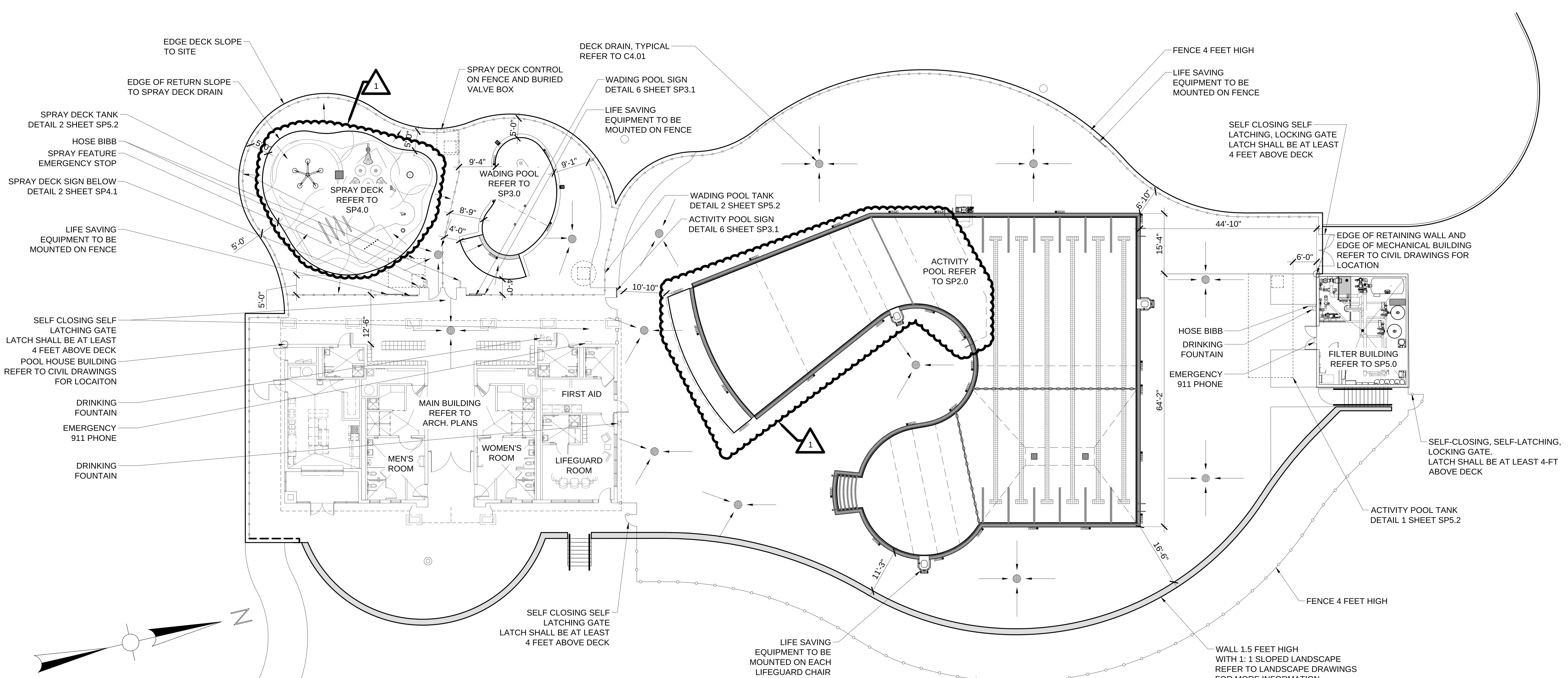

POOL LAYOUT

SCALE: 1/16" = 1'-0"

STRUCTURAL NOTES AND RESTRICTIONS:

1. THE SOIL / EARTH BENEATH EACH POOL AND ITS DECKING SHALL HAVE A SOIL DENSITY AND COMPACTION OF 95% MINIMUM OF THE OPTIMUM MODIFIED STANDARD PROCTOR TEST. NO DEFLECTIONS OR SETTLEMENT OF THE SOILS ARE PERMISSIBLE.
2. PROVIDE ALL REINFORCING STEEL (NEW AND FREE FROM RUST OR SCALE) WITHIN THE POOLS AS:
   a. GRADE #60, #4 REBARS, UNLESS OTHERWISE NOTED.
   b. REBARS SHALL BE SPACED AT 12-IN O.C.B.W.
   c. TIE ALL REBARS AT ALTERNATE INTERSECTIONS.
   d. MINIMUM OVERLAP FOR ALL REBARS SHALL BE 40-BAR DIAMETERS OR 15-INCHES (WHICHEVER IS GREATER).
3. COVER ALL REINFORCING STEEL WITH A MINIMUM 3-INCHES OF CONCRETE.
4. THE REINFORCING INDICATED IS ADEQUATE ONLY WHERE THE BACKFILL IS A WELL-DRAINED, GRAVELLY MATERIAL.
5. THE POOL STRUCTURE SHALL BE 4,500-PSI CONCRETE AT 28 DAYS. THE CONCRETE MIX DESIGN SHALL PROVIDE A 0.45 WATER/CEMENT RATIO AND CONTAIN NO ADMIXTURES UNLESS PRE-APPROVED BY THIS ENGINEER.
6. THE ENTIRE CONCRETE STRUCTURE SHALL BE CURED IN ACCORDANCE WITH SPECIFICATIONS.
7. PROVIDE A WATERTIGHT, LEAK-PROOF STRUCTURE. IN ACCOMPLISHING A WATERTIGHT STRUCTURE, PROVIDE THE FOLLOWING PROCEDURES AND PRACTICES:
   a. FILL AROUND EACH FITTING AND NICHE WITH A NON-SHRINK, EXPANSIVE GROUT.
   b. AVOID HONEYCOMBING. ANY HONEYCOMBING DISCOVERED SHALL BE CHIPPED, CLEANED AND CORRECTED AS REQUIRED BY PROJECT ARCHITECT OR ENGINEER.
8. THE POOL STRUCTURE(S) IS NOT DESIGNED TO WITHSTAND HYDROSTATIC UPLIFT OR GROUNDWATER CONDITIONS THAT COULD CAUSE FLOATING OF THE STRUCTURE. THE HYDROSTATIC RELIEF VALVES AND/OR POOL PLUGS SPECIFIED SHALL BE PROVIDED TO ASSIST IN THIS AREA OF CONCERN. PROVIDE THE EXACT LOCATION OF THE HYDROSTATIC RELIEF VALVES ON THE OFFICIAL “AS-BUILT” RECORD SET OF DRAWING SUBMITTALS.
9. LOCATE 1-CUBIC FOOT OF 3/4-INCH CRUSHED STONE OR GRAVEL BENEATH EACH HYDROSTATIC RELIEF PLUG.
10. PROVIDE A 6-INCH MINIMUM STONE OR GRAVEL THICKNESS BENEATH THE POOL FLOOR (ADDITIONAL THICKNESS MAY BE REQUIRED).

DESIGN CODE COMPLIANCE:

19-13-B33b. PUBLIC POOLS CONNECTICUT MINIMUM STANDARDS FOR SWIMMING POOLS............09/21/2004
CONNECTICUT PUBLIC SWIMMING POOL DESIGN GUIDE..1/2010
AMERICAN NATIONAL STANDARDS FOR PUBLIC POOLS - ANSI/NSPI-1.. 2003
NATIONAL ELECTRICAL CODE(NFPA 70)..2014
VIRGINIA GRAEME BAKER POOL AND SPA SAFETY ACT.. 2008
ADAAG...2010

ENGINEER SEAL:

1. THESE DRAWINGS HAVE BEEN PREPARED FOR EXCLUSIVE USE FOR THE CLIENT AND ARE NOT INTENDED FOR ANY OTHER PURPOSE. TO THE BEST OF MY KNOWLEDGE, THESE DRAWINGS MEET THE REQUIREMENTS SET FORTH BY THE CONNECTICUT DEPARTMENT OF PUBLIC HEALTH (DPH).
2. THE POOLS THAT ARE INCORPORATED INTO THESE DRAWINGS MUST BE CONSTRUCTED IN STRICT ACCORDANCE WITH THE APPROVED DRAWINGS IN ORDER TO QUALIFY FOR A DPH OPERATING PERMIT. ALL CHANGES MUST HAVE WRITTEN APPROVAL FROM WESTON & SAMPSON AND DPH PRIOR TO SUCH CHANGE OR ALTERATION BEING IMPLEMENTED.
3. THE ENGINEER SEAL AFFIXED TO THESE DRAWINGS IS LIMITED TO HYDRAULICS AND DPH COMPLIANCE ONLY.
4. ONLY DRAWINGS FROM WESTON & SAMPSON THAT ARE MARKED "FOR CONSTRUCTION" AND WITH THE DPH APPROVAL NUMBERS AND APPROVAL DATES AFFIXED SHALL BE USED FOR THE POOL CONSTRUCTION IMPLEMENTATION.

DEFINITIONS:

1. CONTRACTOR: PERSON OR ENTITY AUTHORIZED TO CONSTRUCT, INSTALL AND OPERATE A COMMERCIAL POOL, SPA AND THEIR APPURTENANCES.
2. CRITICAL: THIS WORD DESCRIBES DIMENSIONS THAT SHALL NOT BE SUBJECT TO DEVIATION OR ERRORS FOR ANY REASON. VIOLATION OF A CRITICAL DIMENSION MIGHT SUBJECT THE POOL TO A POTENTIAL VARIANCE ACTION OR A PERMANENT WITHHOLDING OF A FUTURE OPERATING CERTIFICATE. WESTON & SAMPSON CONSIDERS ALL DIMENSIONS CONTAINED WITH THE DRAWINGS AS VITAL; HOWEVER, THE WORD CRITICAL IS ADDED TO ATTRACT THE ATTENTION OF THE CONTRACTOR.
3. POOL: THE USE OF THE WORD POOL WITHIN THESE NOTES MAY ALSO REFER TO A POOL OR KIDDIE POOL. PROVIDE WRITTEN QUESTIONS TO THE ENGINEER FOR CLARIFICATIONS.
4. PROVIDE: OBTAIN, PURCHASE, SUPPLY, INSTALL, COMMISSION AND WARRANTY COMPLETELY IN ACCORDANCE WITH ALL CODES, RULES, REGULATIONS AND THE REQUIREMENTS OF THE DRAWINGS AND TECHNICAL SPECIFICATIONS.
5. RAIL: REFERS TO A HANDRAIL, LADDER, OR GRAB RAIL LOCATED AT A POOL. IT PROVIDES BATHER SUPPORT ASSISTANCE WHEN ENTERING OR EXITING A POOL.
6. SLIP-RESISTANT: A HORIZONTAL, NON-SKID TEXTURED SURFACE WITH A COEFFICIENT OF FRICTION RATED AT A MINIMUM 0.6. THE RESPONSIBILITY FOR VERIFICATION AND CONFIRMATION OF COMPLIANCE WITH THIS FRICTION REQUIREMENT IS SOLELY THAT OF THE CONTRACTOR. CERTIFIED MANUFACTURER BROCHURES MAY BE SUBMITTED TO WESTON & SAMPSON FOR APPROVAL. THE TERM "NON-SLIP" SHALL BE CONSIDERED THE SAME AS "SLIP-RESISTANT".
7. VISUAL BARRIER: A CLOSELY-PLANTED, DENSE GROUPING OF PLANTS OR APPROVED ARCHITECTURAL BARRIER THAT IS 42-INCHES HIGH MINIMUM.

GENERAL CONSTRUCTION REQUIREMENTS:

1. THE MINIMUM VERTICAL CLEARANCE ABOVE POOL WATER AND DECK IS 7 FEET.
2. POOL WALL / FLOOR INSTALLATION DIMENSIONAL REQUIREMENTS:
   A. THE UPPER PART OF THE POOL WALLS IN AREAS OF 5 FEET DEPTH OR LESS SHALL BE WITHIN 5 DEGREES OF VERTICAL FOR A MINIMUM DEPTH OF 2.5 FEET AND THE RADIUS JOINING THE UPPER SECTION OF THE FLOOR SHALL NOT EXCEED 2.5 FEET.
   B. THE UPPER PART OF THE POOL WALLS OVER 5 FEET DEEP SHALL BE WITHIN 5 DEGREES OF VERTICAL FOR A MINIMUM DEPTH EQUAL TO THE POOL DEPTH MINUS 2.5 FEET AND THE RADIUS JOINING THIS UPPER SECTION TO THE FLOOR SHALL NOT EXCEED 2.5 FEET..
3. REFER TO THE POOL DRAWINGS FOR FINISHING SURFACING MATERIALS FOR WALLS, FLOOR, AND COPING. FINISH COLORS, AND MATERIALS ARE SPECIFIED IN THESE DRAWINGS. THE INTERIOR SURFACE SHALL BE REFLECTIVE AND SLIP-RESISTANT IN NATURE TO ASSIST IN THE VIEWING OF PERSONS UNDERWATER. UNLESS OTHERWISE NOTED HEREIN, A MAXIMUM OF 0.5-INCHES SHALL BE PROVIDED FOR INTERIOR FINISHES FROM THE BEAM, WALLS, AND FLOORS OF THE POOL.
4. REFER TO PLUMBING DRAWINGS FOR HOSE BIB AND WATER SUPPLY LOCATIONS.
5. ALL DECKS THAT ARE LESS THAN 4-FT WIDE SHALL BE OBSTRUCTED TO ASSIST IN PREVENTING BATHER'S ACCESS.
6. DECK MATERIAL TO BE IMPERVIOUS CAST IN PLACE CONCRETE WITH AN EXPOSED AGGREGATE FINISH.

DEPTH MARKERS:

1. PERMANENT DEPTH MARKERS SHALL BE PLACED ON THE UPPER-MOST POOL WALLS AND DECK EDGE AT THE SHALLOW-END, SLOPE BREAK, AND DEEP END AREAS OF THE POOL PER THE REQUIREMENTS OF THESE DRAWINGS. ADDITIONAL DEPTH MARKINGS SHALL BE PLACED TO MAINTAIN A MAXIMUM 25-FOOT SPACING BETWEEN ALL MARKINGS. THE LETTERING SHALL BE A CONTRASTING COLOR TO THE BACKGROUND.
2. EACH DEPTH MARKING AND "NO DIVING" MARKING LOCATED ON THE DECK SURFACE (WITHIN 2-FEET OF THE WATER'S EDGE) SHALL BE OF A SLIP-RESISTANT MATERIAL, SHALL BE 4-INCH HIGH, NOT TO EXCEED SPACING OF 25-FEET AROUND POOL AND BE CONTRASTING IN COLOR. AN APPROVED UNIVERSAL "NO DIVING SYMBOL" (USING THE COLOR "RED") MAY BE SUBSTITUTED FOR THE ABOVE "NO DIVING" MARKING. THE ASSOCIATED DEPTH SHALL BE PRESENT ON THE WATERLINE LINE OF THE POOL.
3. THE MINIMUM LETTER HEIGHT OF EACH DEPTH MARKING SHALL BE 4-INCHES.
4. THE ONLY AUTHORIZED ABBREVIATION FOR "FEET", "INCHES", AND "METERS" SHALL BE "FT", "IN" AND "M" RESPECTIVELY.
5. ALL DEPTH MARKINGS SHALL BE LOCATED TO ACCURATELY DEPICT THE ACTUAL WATER DEPTH WITHIN 3-INCHES PROPER DETERMINATION OF THIS RULE COMPLIANCE SHALL REQUIRE MEASURING THE WATER DEPTH AT A LOCATION 3-FEET HORIZONTAL FROM THE VERTICAL WALL DEPTH MARKING.
6. THE DEPTH AT THE DEEPEST POINT/MAIN DRAIN GRATE SHALL NOT DEVIATE MORE THAN 3-INCHES FROM THE SIDEWALL DEPTH MARKINGS AT THAT LOCATION.

BATH HOUSE:

1. SHOWER SHALL SUPPLY A MINIMUM OF 90°F WATER WITH A TEMPERED MIXING VALVE.
2. BATHHOUSE FLOORING SHALL BE IMPERVIOUS IN ACCORDANCE WITH DPH REQUIREMENTS. FLOOR DRAINS SHALL PROVIDED.

FENCING:

PROVIDE A 48-INCH HIGH (MINIMUM) NON-CLIMBABLE FENCING BARRIER AROUND THE POOL AREA (TO MEET STATE CODE). THE FENCING SHALL INCLUDE SELF-CLOSING GATES AND HORIZONTAL SPACE BETWEEN VERTICAL MEMBERS OF THE ENCLOSURE SHALL NOT EXCEED TWO INCHES.

1. THE HEIGHT OF ANY OPENING UNDER THE BOTTOM OF THE ENCLOSURE SHALL NOT EXCEED TWO INCHES.
2. FENCES SHALL HAVE A SELF-CLOSING GATE, WITH A LATCH AT LEAST 3.5-FEET ABOVE THE GROUND, WHICH CAN BE LOCKED.

WATER SUPPLY REQUIREMENTS:

1. THE CONTRACTOR SHALL PROVIDE A HOSE BIBB LOCATED A MINIMUM OF 10-FEET/MAXIMUM OF 20-FEET FROM EACH POOL'S WATER-EDGE. REFER TO ARCHITECTURAL DRAWINGS FOR THE DECK SHOWER DESIGN. INCLUDE A VACUUM BREAKER WITH EACH HOSE BIBB.
2. WATER INTRODUCED INTO THE POOL, WADING POOL, OR SPRAY DECK SYSTEMS SHALL BE SUPPLIED THROUGH AN AIR GAP. THE AIR GAP SHALL BE TWICE THE SIZE OF THE PIPE DIAMETER WITH A MINIMUM OF 3”, OR AS SHOWN ON CONTRACT PLANS. THIS IS REQUIRED TO COMPLY WITH THE REQUIREMENTS OF PUBLIC HEALTH CODE, SECTION 19-13-B37, SECTION 19-13-B38(B), AND SECTION 19-13-B45.
3. PROVIDE AN ACCEPTABLE 1-1/2-IN. COLD WATER SUPPLY TO THE FILTRATION SYSTEM WITH A MINIMUM OF 60-PSI AVAILABLE PRESSURE. POTABLE WATER QUALITY SHALL COMPLY WITH DPH REQUIREMENTS.

COORDINATION NOTES:

THE GENERAL CONTRACTOR SHALL BE RESPONSIBLE FOR COORDINATION OF THE FOLLOWING ISSUES;

- 2% DECK SLOPE.
- DRAINAGE OF DECK.
- SHOWERS, HOSE BIBBS WITH VACUUM BREAKERS, AND ELECTRICAL RECEPTACLES FOR POOL CLEANER.
- MUNICIPAL WATER SUPPLY TO COLLECTOR TANKS AND WASTE WATER REMOVAL FROM EQUIPMENT ROOM SHALL DISCHARGE TO MUNICIPAL WASTE WATER SYSTEM.
- SLIP RESISTANT RESTROOM TILE & FLOOR DRAIN.

FAILURE TO COORDINATE THESE ISSUES CAN RESULT IN SIGNIFICANT DPH PENALTIES UPON COMPLETION OF THE PROJECT.

PIPING INSTALLATION REQUIREMENTS:

1. ALL PIPING SHALL BE SCHEDULE 80 PVC. ALL PIPING SHALL BE STAMPED WITH THE MANUFACTURER'S MARKING THAT IT IS APPROVED FOR USE WITH POTABLE WATER (NSF-PW). PLASTIC PIPE EXPOSED TO SUNLIGHT SHALL BE COATED FOR UV PROTECTION.
2. THE PIPING DIAGRAMS AND SIZES SHOWN IN THESE DRAWINGS SHALL BE FOLLOWED WITHOUT EXCEPTION UNLESS WRITTEN AUTHORIZATION FROM ENGINEER IS PROVIDED.
3. ALL POOL PERIMETER PIPING SHALL BE PLACED AS CLOSE TO THE POOL BEAM AS POSSIBLE.
4. THE PIPING SYSTEMS INDICATED IN THESE DRAWINGS ARE SHOWN IN A DIAGRAMMATIC VIEW ONLY. THE CONTRACTOR SHALL PROVIDE ALL PIPING AND FITTINGS REQUIRED FOR THE COMPLETE INSTALLATION.
5. THE CONTRACTOR SHALL PROVIDE AND COMPLY WITH ALL PIPING INSPECTIONS THAT MAY BE REQUIRED BY DPH AND LOCAL BUILDING OFFICIALS.
6. THE CONTRACTOR SHALL PROVIDE PIPE HANGER DETAILS TO ENGINEER FOR WRITTEN APPROVAL PRIOR TO THE INSTALLATION.
7. THE MAIN DRAIN PIPING SHALL BE INSTALLED TO COMPLY WITH THE FOLLOWING REQUIREMENTS:
   A. THE MAIN DRAIN GRAVITY FLOW PIPE SHALL HAVE A SLOPE TOWARD THE COLLECTOR TANK.
   B. AT NO POSITION SHALL THE MAIN DRAIN PIPING CHANGE SLOPES SO AS TO ALLOW AN AIR POCKET OR TRAP TO OCCUR.
8. THE STATIC PIPING SHALL BE INSTALLED TO COMPLY WITH THE FOLLOWING REQUIREMENTS:
   A. THE STATIC PIPING SHALL BE INSTALLED SO AS TO ALLOW THE STATIC PIPE TO HAVE A SLOPE DOWNWARD TOWARD THE COLLECTOR TANK.
9. PIPING PRESSURE TESTING SHALL BE COORDINATED BY THE POOL CONTRACTOR AND SHALL BE INCLUDED IN HIS COST. THE ENGINEER SHALL BE ONSITE DURING PRESSURE TESTING. ALL PIPING SHALL CONFORM TO ACCEPTED WORKMANSHIP STANDARDS AND SHALL BE TESTED AS FOLLOWS:
   A. ALL PIPING SHALL BE TESTED BY MEANS OF WATER PRESSURE TO A MINIMUM OF 35 P.S.I FOR 3 HOURS PRIOR TO INSTALLATION OF THE DECK. MAINTAIN THE PRESSURE TEST ON THE PIPING SYSTEM THROUGHOUT THE DECKING PLACEMENT TASKS.
10. EXTEND ALL PIPING TO ITS SPECIFIC FILTRATION SYSTEM OR COLLECTOR TANK. DO NOT CONNECT THE PIPING TO THE FILTRATION SYSTEM UNTIL THE DECKING IS IN PLACE AND THE PRESSURE-TEST IS COMPLETED, APPROVED, AND REMOVED FROM THE PIPING.

CONSTRUCTION DOCUMENTS
12/11/15

THE ELECTRICAL CONTRACTOR SHALL GROUND AND BOND ALL ELECTRICAL EQUIPMENT, POOL REINFORCING, POOL ACCESSORIES, AND PIPING IN ACCORDANCE WITH NATIONAL ELECTRIC CODE REQUIREMENTS, ARTICLE 680. THE ELECTRICAL CONTRACTOR SHALL OBTAIN A COPY OF ALL APPLICABLE LOCAL STATE ELECTRICAL CODE REGULATIONS.

Weston&Sampson®
273 Dividend Road, Rocky Hill, CT 06067
(860) 513-1473 (800) SAMPSON
www.westonandsampson.com

No.	Date	Dr.By	Ck.By	App.By	Description
1	03/03/16	SAA	MPM	CBW	ADDENDUM #1

APPROVED 03/07/16
REGISTERED PROFESSIONAL ENGINEER — DATE

STATE OF CONNECTICUT ★ CHRISTOPHER B. WESTER ★ No. 17476 LICENSED PROFESSIONAL ENGINEER

TOWN OF GREENWICH – DEPARTMENT OF PUBLIC WORKS
RITCH AVENUE WEST, GREENWICH, CONNECTICUT
BYRAM PARK POOL REPLACEMENT

SITE PLAN AND NOTES

CADD NO.	SCALE:	CONTRACT:	JOB NO.	DR.BY	DSN.BY	CHK.BY	APP.BY
GREENWICH	AS NOTED	–	2130336	S.A.A.	M.P.M.	STG	CBW

SP1.0

FILE NO.

SHEET – OF –

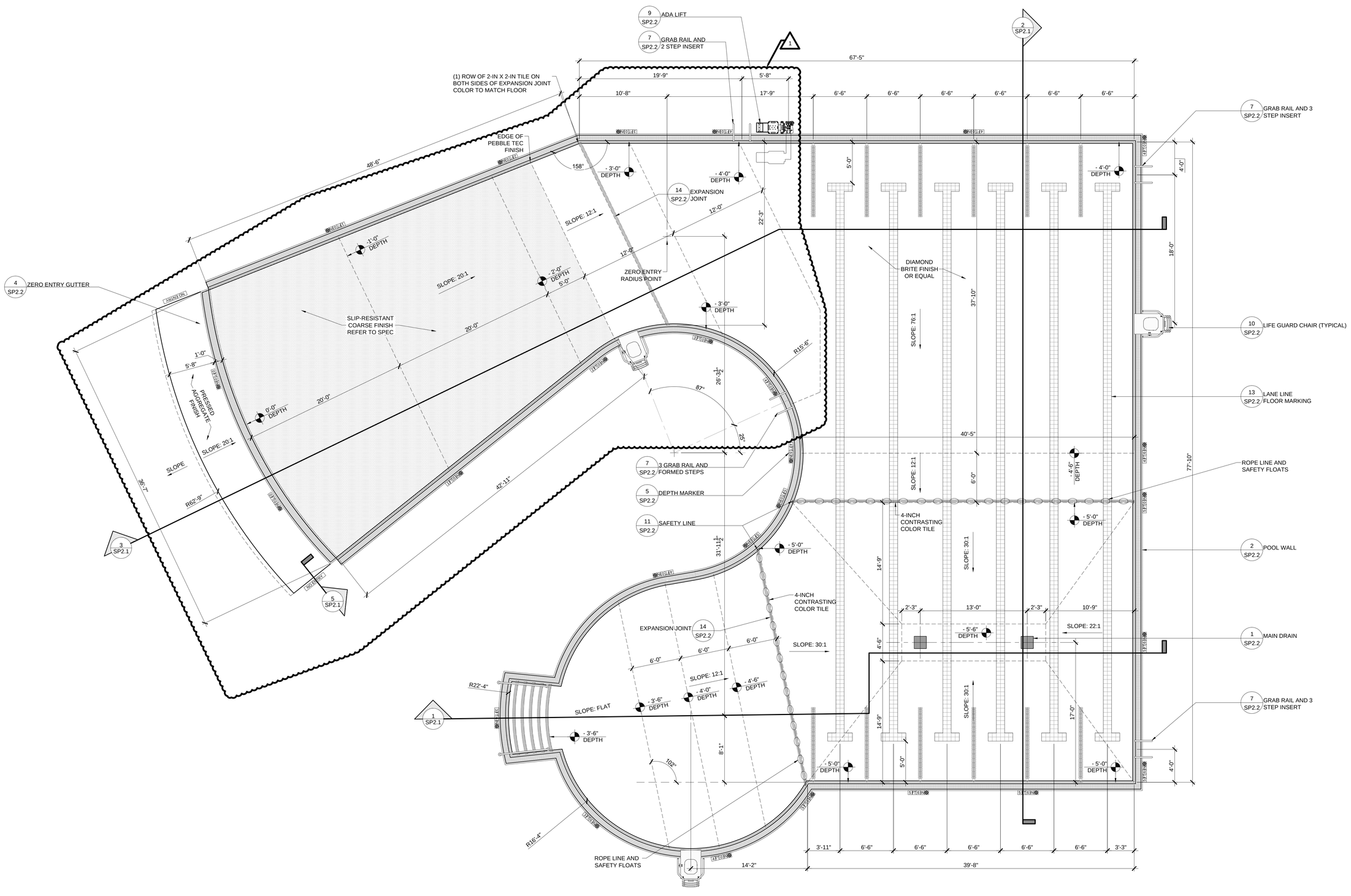

ACTIVITY POOL PLAN

SCALE: 3/16" = 1'-0"

CONSTRUCTION DOCUMENTS
12/11/15

THE ELECTRICAL CONTRACTOR SHALL GROUND AND BOND ALL ELECTRICAL EQUIPMENT, POOL REINFORCING, POOL ACCESSORIES, AND PIPING IN ACCORDANCE WITH NATIONAL ELECTRIC CODE REQUIREMENTS, ARTICLE 680. THE ELECTRICAL CONTRACTOR SHALL OBTAIN A COPY OF ALL APPLICABLE LOCAL STATE ELECTRICAL CODE REGULATIONS.

Weston&Sampson®
273 Dividend Road, Rocky Hill, CT 06067
(860) 513-1473 (800) SAMPSON
www.westonandsampson.com

No.	Date	Dr.By	Ck.By	App.By	Description
1	03/03/16	SAA	MPM	CBW	ADDENDUM #1

APPROVED
03/07/16
DATE
REGISTERED PROFESSIONAL ENGINEER

STATE OF CONNECTICUT CHRISTOPHER B. WHITE No. 17475 REGISTERED PROFESSIONAL ENGINEER

TOWN OF GREENWICH – DEPARTMENT OF PUBLIC WORKS
RITCH AVENUE WEST, GREENWICH, CONNECTICUT
BYRAM PARK POOL REPLACEMENT

ACTIVITY POOL PLAN

CADD NO.	SCALE:	CONTRACT:	JOB NO.	DR.BY	DSN.BY	CHK.BY	APP.BY
GREENWICH	AS NOTED	–	2130336	S.A.A.	M.P.M.	STG	CBW

SP2.0

FILE NO.

SHEET – OF –

03/07/2016 09:36:49AM Z:\MA-Boston-Projects\Aquatics\Greenwich, CT- Byram Park Pool\CAD\0-Current_Set\Sheets\SP-2.0 ACTIVITY POOL PLAN.dwg

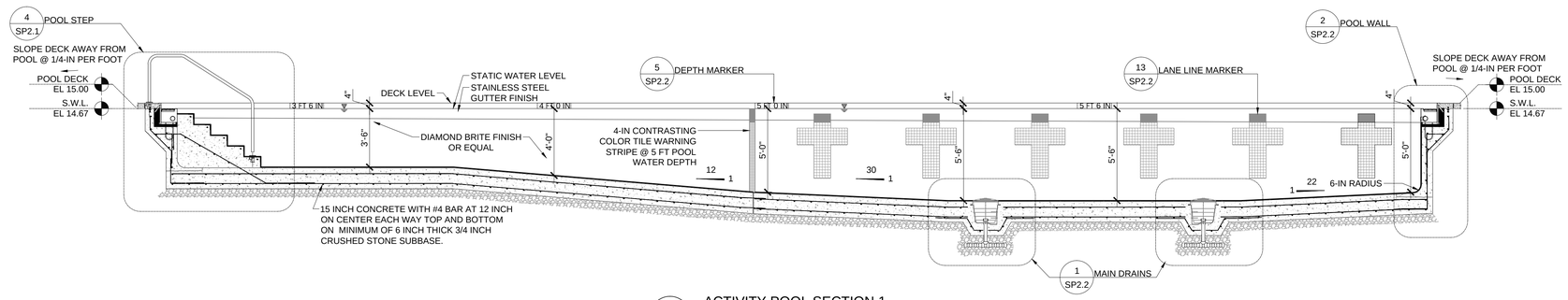

1 ACTIVITY POOL SECTION 1

SCALE: 1/4" = 1'-0"

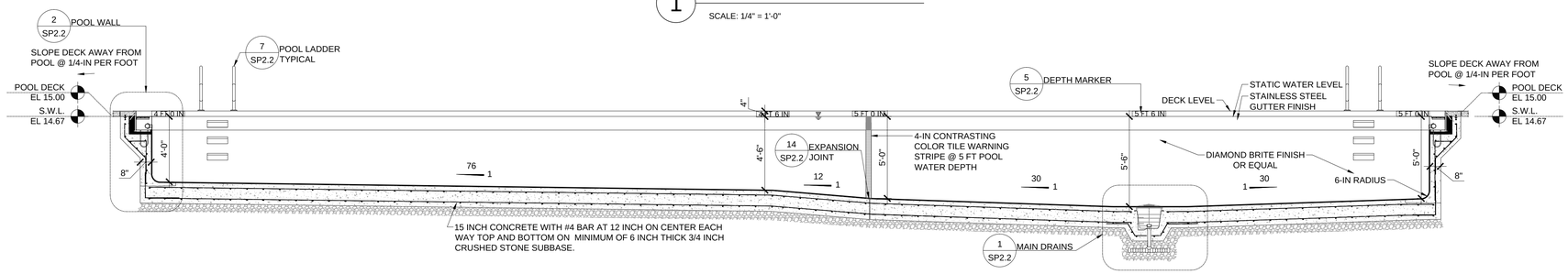

2 ACTIVITY POOL SECTION 2

SCALE: 1/4" = 1'-0"

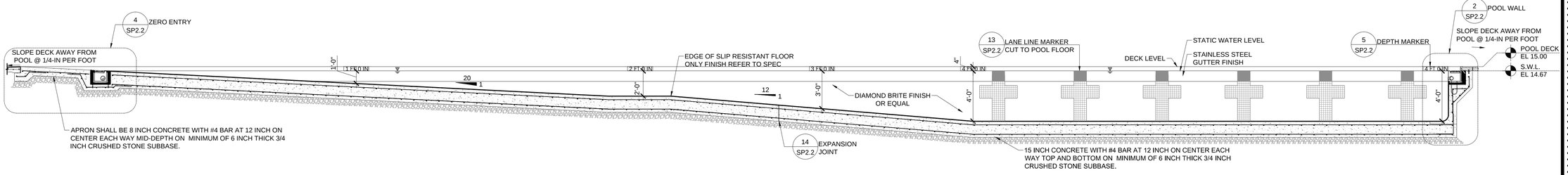

3 ACTIVITY POOL SECTION 3

SCALE: 1/4" = 1'-0"

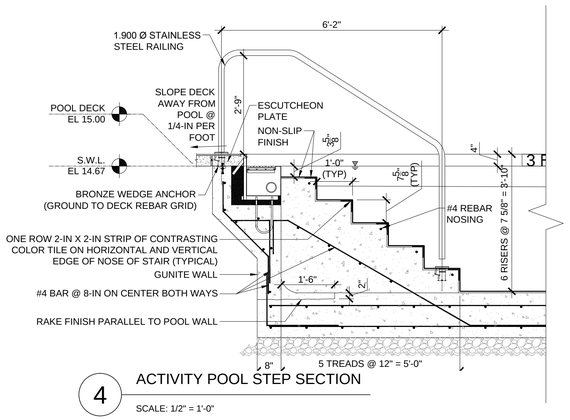

4 ACTIVITY POOL STEP SECTION

SCALE: 1/2" = 1'-0"

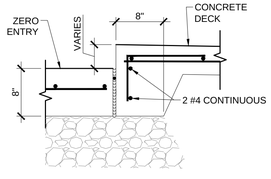

5 ACTIVITY POOL ZERO ENTRY SIDE SECTION

SCALE: 1" = 1'-0"

CONSTRUCTION DOCUMENTS
12/11/15

THE ELECTRICAL CONTRACTOR SHALL GROUND AND BOND ALL ELECTRICAL EQUIPMENT, POOL REINFORCING, POOL ACCESSORIES, AND PIPING IN ACCORDANCE WITH NATIONAL ELECTRIC CODE REQUIREMENTS, ARTICLE 680. THE ELECTRICAL CONTRACTOR SHALL OBTAIN A COPY OF ALL APPLICABLE LOCAL STATE ELECTRICAL CODE REGULATIONS.

Weston&Sampson®
273 Dividend Road, Rocky Hill, CT 06067
(860) 513-1473 (800) SAMPSON
www.westonandsampson.com

No.	Date	Dr.By	Ck.By	App.By	Description
1	03/03/16	SAA	MPM	CBW	ADDENDUM #1

APPROVED
03/07/16
DATE
REGISTERED PROFESSIONAL ENGINEER

STATE OF CONNECTICUT CHRISTOPHER B. WHITE No. 17475 LICENSED PROFESSIONAL ENGINEER

TOWN OF GREENWICH – DEPARTMENT OF PUBLIC WORKS
RITCH AVENUE WEST, GREENWICH, CONNECTICUT
BYRAM PARK POOL REPLACEMENT

ACTIVITY POOL SECTION

CADD NO.	SCALE:	CONTRACT:	JOB NO.	DR.BY	DSN.BY	CHK.BY	APP.BY
GREENWICH	AS NOTED	–	2130336	S.A.A.	M.P.M.	STG	CBW

SP2.1

FILE NO.

SHEET – OF –

03/07/2016 03:32:02PM Z:\MA-Boston-Projects\Aquatics\Greenwich, CT- Byram Park Pool\CAD\0-Current_Set\Sheets\SP-2.1 ACTIVITY POOL SECTION.dwg

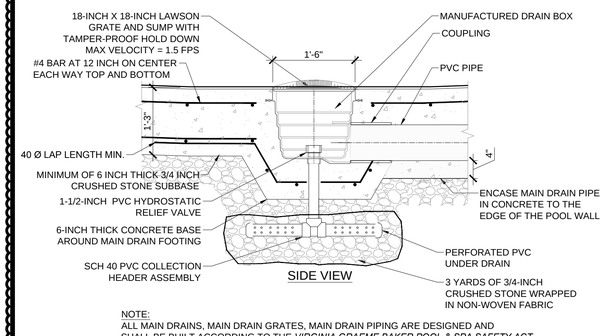

NOTE:
ALL MAIN DRAINS, MAIN DRAIN GRATES, MAIN DRAIN PIPING ARE DESIGNED AND SHALL BE BUILT ACCORDING TO THE *VIRGINIA GRAEME BAKER POOL & SPA SAFETY ACT*

1 MAIN DRAIN

SCALE: 3/4" = 1'-0"

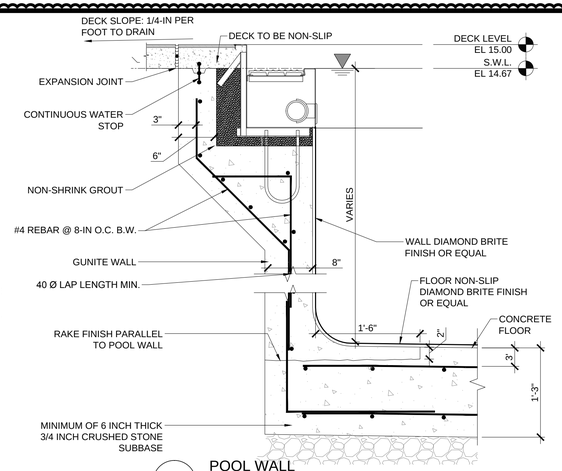

2 POOL WALL

SCALE: 1" = 1'-0"

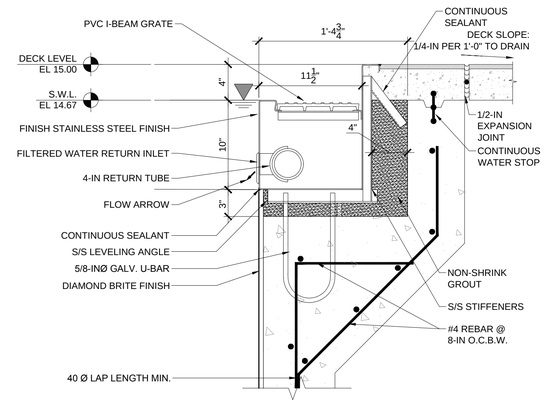

3 GUTTER

SCALE: 1-1/2" = 1'-0"

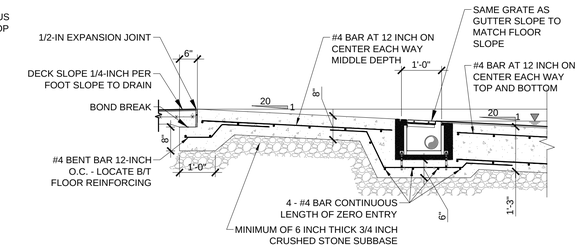

4 ZERO ENTRY GUTTER

SCALE: 1/2" = 1'-0"

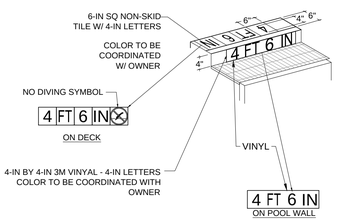

NOTE: ALL TEXT SHALL BE DARK IN COLOR ON WHITE OR LIGHT CONTRASTING BACKGROUND

NOTE:
1. ALL DEPTH MARKERS SHALL SAY: __FT __IN
2. NO DIVING SHALL BE NO DIVING SYMBOL OR SAY: NO DIVING
3. DECK TILE REQUIRED TO BE NON-SLIP

5 DEPTH MARKER

SCALE: N.T.S.

THESE LETTERS SHALL CONTRAST THE BACK GROUND COLOR AND BE NO LESS THAN 1 INCH HIGH

POOL RULES

1. NO FOOD, DRINK, GLASS OR ANIMALS IN POOL OR ON POOL DECK
2. SHOWER BEFORE ENTERING POOL
3. BATHING LOAD: _____ PERSONS MAXIMUM
4. POOL HOURS: ___ AM TO ___ PM
5. NOT INTENDED FOR NIGHTTIME SWIMMING
6. ALL PERSONS SHALL BATHE WITH WARM WATER AND SOAP BEFORE ENTERING THE POOL.
7. ANY PERSONS KNOWN OR SUSPECTED OF HAVING A COMMUNICABLE DISEASE SHALL NOT USE THE POOL.
8. SPITTING OR BLOWING THE NOSE IN THE POOL IS PROHIBITED.
9. RUNNING, BOISTEROUS OR ROUGH PLAY (EXCEPT SUPERVISED WATER SPORTS) IS PROHIBITED.

NO DIVING

THIS SIGN IS MINIMUM REQUIRED TO MEET CODE, THIS OR EQUIVALENT SHALL BE INSTALLED PRIOR TO HEALTH INSPECTION. SIGN MAY BE ADJUSTED FOR AESTHETICS AT ANY TIME BUT SHALL HAVE MINIMUM SHOWN. THIS SIGN SHALL BE MADE OF UV RESISTANT POLYETHYLENE.

POOL RULES SIGN PER 19-13-B33b. PUBLIC POOLS

1. POOL RULES MUST BE DISPLAYED ON A SIGN AT OR NEAR THE POOL SIDE AND MUST BE LEGIBLE FROM THE POOL DECK.
2. RULES SHALL BE STATED AS CODE REQUIRES AS A MINIMUM.
3. LETTERING FOR THE POOL RULES SIGN IS A T LEAST 1-INCH HIGH AND "NO DIVING" IS AT LEAST 4-INCH HIGH.
4. LIFEGUARDS. WHEN NO LIFEGUARD SERVICE IS IN EFFECT A WARNING SIGN SHALL BE PLACED IN PLAIN VIEW AND SHALL STATE "WARNING - NO LIFEGUARD ON DUTY" WITH LEGIBLE LETTERS, AT LEAST FOUR INCHES HIGH. THIS WARNING SHALL BE EASILY VISIBLE FROM ALL ENTRY POINTS INTO THE POOL AREA.

6 POOL SIGN

SCALE: N.T.S.

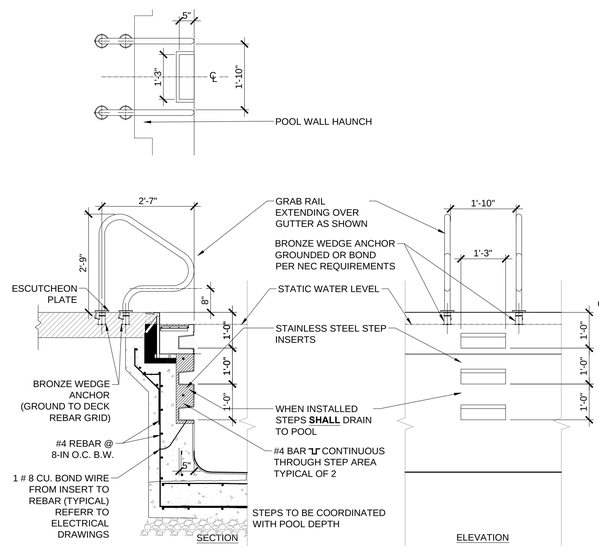

7 GRAB RAIL AND STEP INSETS

SCALE: 1/2" = 1'-0"

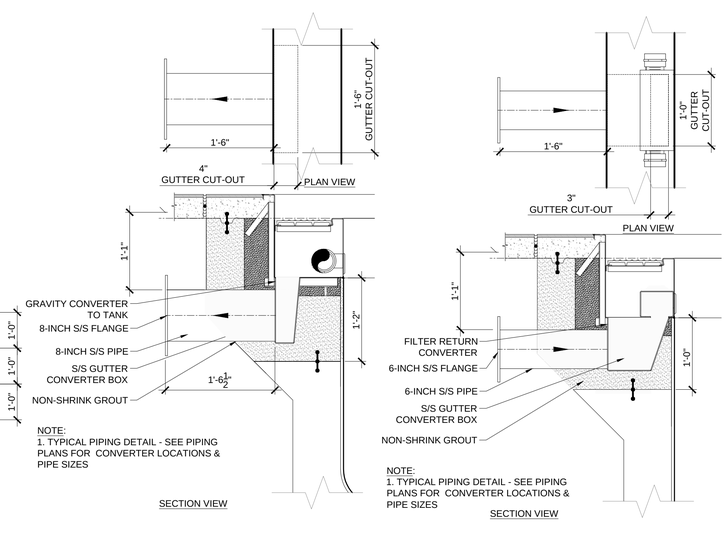

8 GUTTER AND FILTER RETURN CONVERTER

SCALE: 1" = 1'-0"

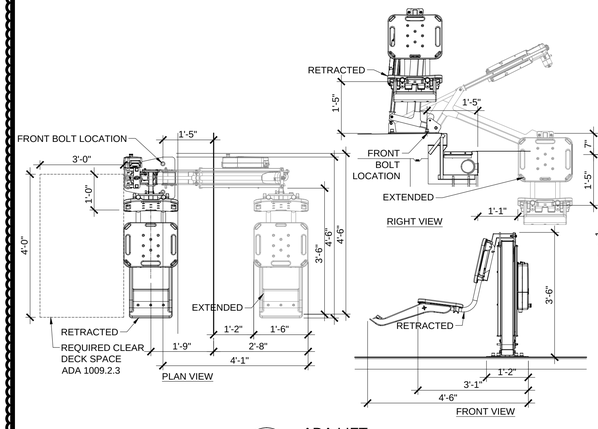

9 ADA LIFT

SCALE: 1/2" = 1'-0"

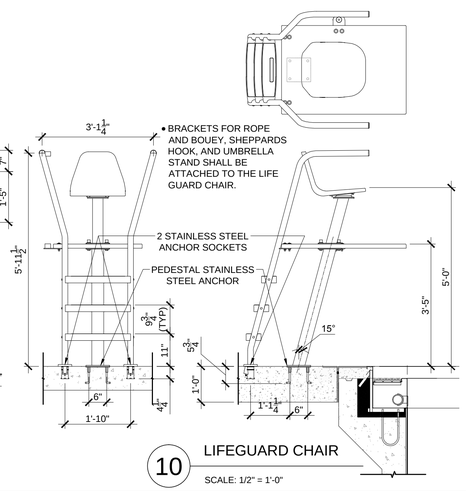

10 LIFEGUARD CHAIR

SCALE: 1/2" = 1'-0"

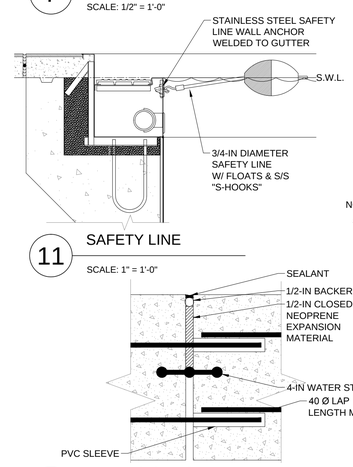

11 SAFETY LINE

SCALE: 1" = 1'-0"

14 EXPANSION JOINT

SCALE: N.T.S.

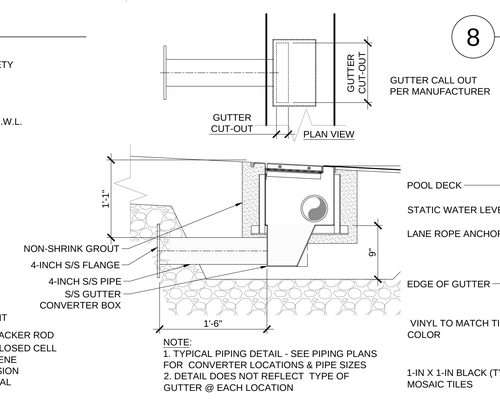

12 ZERO ENTRY GUTTER CONVERTER

SCALE: 1" = 1'-0"

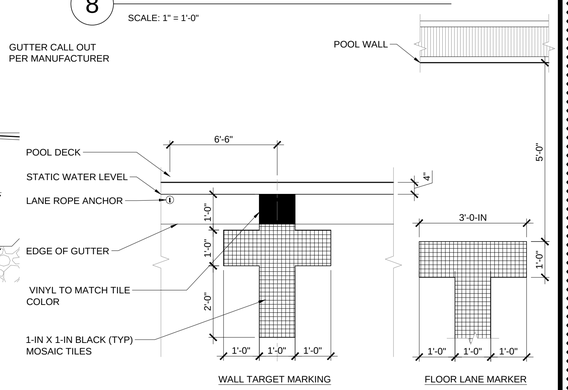

13 LANE LINE MARKER

SCALE: 1/2" = 1'-0"

CONSTRUCTION DOCUMENTS
12/11/15

THE ELECTRICAL CONTRACTOR SHALL GROUND AND BOND ALL ELECTRICAL EQUIPMENT, POOL REINFORCING, POOL ACCESSORIES, AND PIPING IN ACCORDANCE WITH NATIONAL ELECTRIC CODE REQUIREMENTS, ARTICLE 680. THE ELECTRICAL CONTRACTOR SHALL OBTAIN A COPY OF ALL APPLICABLE LOCAL STATE ELECTRICAL CODE REGULATIONS.

Weston&Sampson®
273 Dividend Road, Rocky Hill, CT 06067
(860) 513-1473 (800) SAMPSON
www.westonandsampson.com

No.	Date	Dr.By	Ck.By	App.By	Description	ADDENDUM #1
1	03/03/16	SAA	MPM	CBW	APPROVED	

REGISTERED PROFESSIONAL ENGINEER — DATE 03/07/16

STATE OF CONNECTICUT — CHRISTOPHER B. WHITE — No. 17475 — REGISTERED PROFESSIONAL ENGINEER

TOWN OF GREENWICH – DEPARTMENT OF PUBLIC WORKS
RITCH AVENUE WEST, GREENWICH, CONNECTICUT
BYRAM PARK POOL REPLACEMENT

ACTIVITY POOL DETAILS

CADD NO.	SCALE:	CONTRACT:	JOB NO.	DR.BY	DSN.BY	CHK.BY	APP.BY
GREENWICH	AS NOTED	–	2130336	S.A.A.	M.P.M.	STG	CBW

FILE NO. SP2.2

SHEET – OF –

03/07/2016 04:28:05PM Z:\MA-Boston-Projects\Aquatics\Greenwich, CT- Byram Park Pool\CAD\0-Current_Set\Sheets\SP-2.2 ACTIVITY POOL DETAIL.dwg

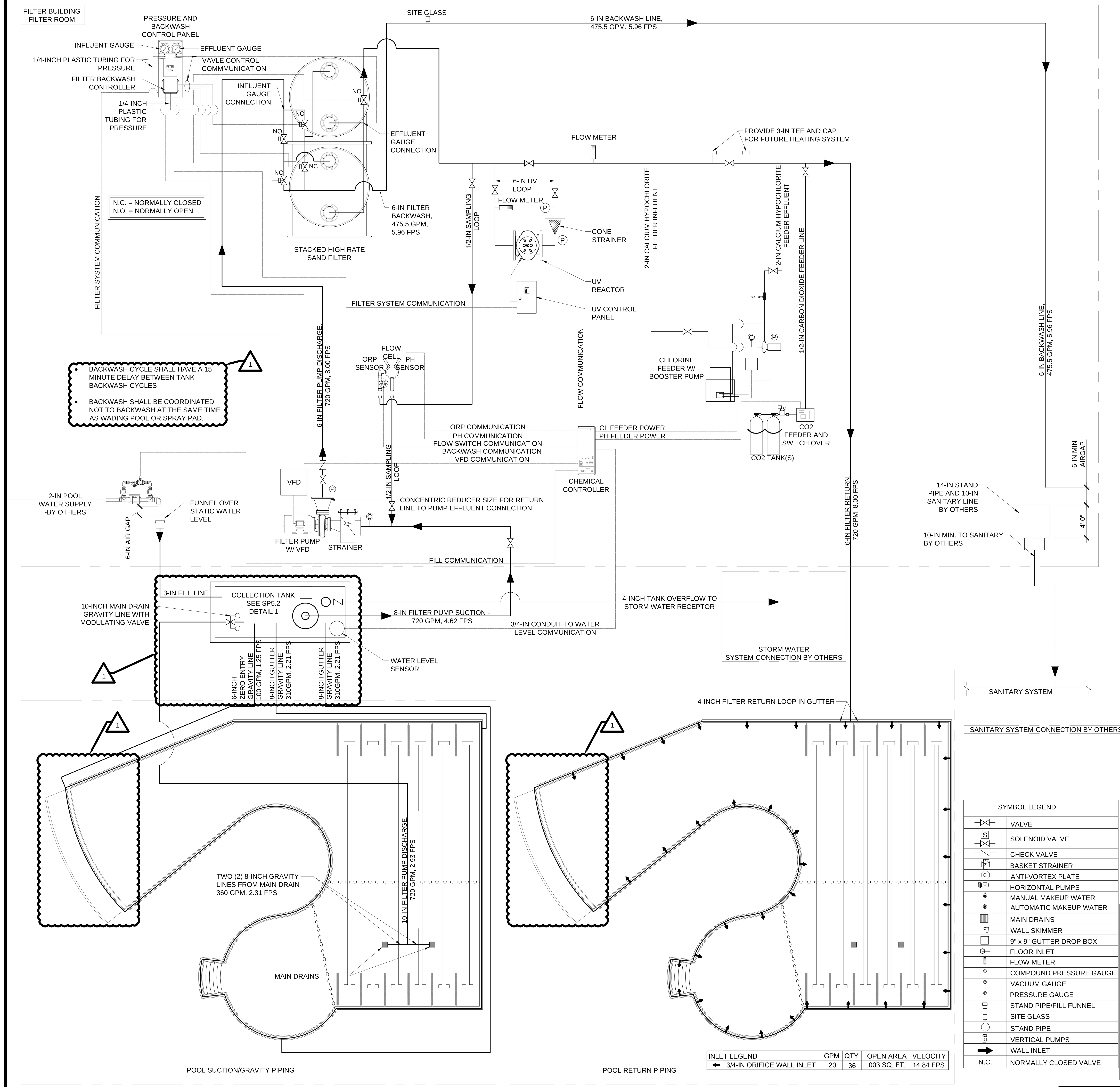

INLET LEGEND	GPM	QTY	OPEN AREA	VELOCITY
← 3/4-IN ORIFICE WALL INLET	20	36	.003 SQ. FT.	14.84 FPS

SYMBOL LEGEND	
	VALVE
	SOLENOID VALVE
	CHECK VALVE
	BASKET STRAINER
	ANTI-VORTEX PLATE
	HORIZONTAL PUMPS
	MANUAL MAKEUP WATER
	AUTOMATIC MAKEUP WATER
	MAIN DRAINS
	WALL SKIMMER
	9" x 9" GUTTER DROP BOX
	FLOOR INLET
	FLOW METER
	COMPOUND PRESSURE GAUGE
	VACUUM GAUGE
	PRESSURE GAUGE
	STAND PIPE/FILL FUNNEL
	SITE GLASS
	STAND PIPE
	VERTICAL PUMPS
	WALL INLET
N.C.	NORMALLY CLOSED VALVE

ACTIVITY POOL PIPING SCHEMATIC

SCALE: NOT TO SCALE

ACTIVITY POOL EQUIPMENT SCHEDULE

PERIMETER OVERFLOW AND RECIRCULATION SYSTEM

MARK	QTY	ITEM	MANUFACTURER	CAT NO.	DESCRIPTION
1	2	MAIN DRAIN GRATE & SUMP	LAWSON AQUATICS	MLD-FG-1818-WT	18-INCH BY 18-INCH PVC SUMP/GRATE DOMED WITH 8-INCH SIDE PORT. COMPLY WITH ASME/ANSI A112.19.8-2007 UNBLOCKABLE REQUIREMENTS. OPEN AREA PROVIDED 183.06 SQ. IN., 576 GPM.
2	4	HYDROSTATIC VALVE	HAYWARD	SP1056	HYDROSTATIC RELIEF VALVE
3	4	COL.TUBE	HAYWARD	SP1055	COMMERCIAL COLLECTOR TUBE
4	453'-5"	GUTTER	WHITTEN PRODUCTS	PRS-DL	STAINLESS STEEL PERIMETER OVERFLOW GUTTER SYSTEM WITH 4-INCH RETURN LOOP AND STRAIGHT BACK

FILTER AREA MISCELLANEOUS EQUIPMENT

MARK	QTY	ITEM	MANUFACTURER	CAT NO.	DESCRIPTION
5	4	PRESSURE GAUGE	WEKSLER	UA25B4L	2-1/2-INCH DIA. FACE, 0-60 PSI
6	2	COMPOUND GAUGE	WEKSLER	UA25K4L	2-1/2-INCH DIA. FACE, 0-30 INCHES HG, 0-60 PSI
7	1	EYE WASH STATION	HAWS	7500	16-GALLON CAPACITY PORTABLE EYE WASH STATION

FILTRATION EQUIPMENT

MARK	QTY	ITEM	MANUFACTURER	CAT NO.	DESCRIPTION
8	1	COLLECTION TANK	PHOENIX PRECAST PRODUCTS	PRECAST	10'-0" X 25'-0" X 9'-0" COLLECTION TANK WITH 3'-0" BY 3'-0" TANK HATCH OPENING , AND ALL PIPE SLEEVES PER PIPING PLANS.
9	1	TANK HATCH	BILCO	TER-4	HATCH, SINGLE LEAF, 150 POUND PER SQUARE FOOT LOAD RATING, ALUMINUM FRAME, INFILL TO MATCH SURROUNDINGS AND T-316 STAINLESS STEEL HARDWARE.
10	1	ANTI-VORTEX PLATE	NEPTUNE BENSON	AVPLATE08PVCKIT	PVC PLATE WITH ALL STAINLESS STEEL HARDWARE FOR 8-INCH SUCTION PIPE
11	1	WATER LEVEL SENSOR	GEMS SENSOR	3F3E/ 16ML1A4/ PROBE PER FOOT	WATER LEVEL CONTROL AND 3 PROBE WITH FITTINGS AND PROBES AS REQUIRED FOR FILL CONTROLL AND SHALL INCLUDE REQUIRED SOLENOID VALVE.
12	1	FILTER PUMP	MARLOW	530SC 4-9SC	15 HP PUMP, 720 GPM AT 61 TDH, 3 PHASE, 460 VOLT
13	1	PUMP STRAINER	NEPTUNE BENSON	150NBFG85ER1	8-INCH REDUCING TO 5-INCH FIBERGLASS STRAINER WITH STAINLESS STEEL BASKET, WITH ONE SPARE BASKET MODEL NBSK08EP
14	1	VFD	PENTAIR	ACUDRIVE XS	15 HP VFD, 460V, 3 PHASE, WITH DISCONNECT & BYPASS VARIABLE FREQUENCY DRIVE, NEMA 12 ENCLOSURE.
15	1	FLOW METER	GF SIGNET	2536	DIGITAL PADDLEWHEEL, DISPLAY ON CHEMICAL CONTROLLER AND RELAY TO VFD
16	1	MODULATION VALVE	NEPTUNE BENSON	DVINLINEPVC10D	10-IN MODULATION VALVE SCH 80 PVC WITH 304 STAINLESS STEEL 7-INCH DIAMETER FLOATS, SOLID CORE 1-IN STAINLESS STEEL ROD CLOSER = 80%
17	1	FILTER	NEPTUNE BENSON	4884SHFFGS-6R	HI-RATE SAND FILTER, DUAL FILTERS STACKED WITH MODEL FP2SHFS3WP 6-INCH FACE PIPING INCLUDING 5-INCH BACKWASH CONNECTION, MANIFOLD BLOCK, ELECTRIC SOLENOID VALVES, AND BACKWASH CONTROLLER

CHEMICAL EQUIPMENT

MARK	QTY	ITEM	MANUFACTURER	CAT NO.	DESCRIPTION
18	1	CHEMICAL CONTROLLER	BEC SYSTEMS	BECSYS5	CHEMICAL CONTROLLER WITH FLOW CELL ASSEMBLY WITH ORP AND PH SENSOR VFD CONTROL, CONNECT TO VFD, WATERLEVEL AND BACKWASH CONTROL PANEL.
19	1	TABLET CHLORINE FEEDER	PULSAR	PULSAR140	CHLORINE TABLET FEEDER COMPLETE WITH PULSAR BOOSTER PUMP AND VENTURI. BOOSTER PUMP SHALL BE 1Ø 115V.
20	1	CO_2	BEC SYSTEMS	BECSYS CO2	SINGLE TANK REGULATOR AND AUTOMATIC DUAL TANK SWITCH OVER CARBON DIOXIDE FEEDER 20-200 SCFH, 115V WITH HEATER
21	1	UV	ETS	ECF-220-8	ULTRA VIOLET DISINFECTION WITH CONE STRAINER, 3 PHASE 480V, CONTROL PANEL SHALL BE NEMA 12 MINIMUM. PROVIDE (1) EXTRA SET OF BULBS.

DECK SAFETY & MAINTENANCE EQUIPMENT

MARK	QTY	ITEM	MANUFACTURER	CAT NO.	DESCRIPTION
22	5	LIFE RING	BEL-AQUA	34124 /LL60	24-INCH DIAMETER PLASTIC RING WITH 1/4-INCH BY 60 FOOT LONG SAFETY LINE. SHALL BE ATTACHED TO LIFEGUARD STAND
23	5	LIFE HOOK	BEL-AQUA	R153 / 30316	SHEPARD TYPE LIFE HOOK, END ANCHORED TO A 16 FOOT ALUMINUM HANDLE. SHALL BE ATTACHED TO LIFEGUARD STAND
24	2	SAFTY LINE	PENTAIR	LENGTH PER PLAN	POLYTHENE ROPE, FLOAT AND ANCHORS.
25	1	VACUUM CLEANER HEAD	PENTAIR PROVAC	R201276 - MODEL 214	14-INCH WIDE VACUUM HEAD WITH FLOOR WHEEL BASE, 16 FT HANDLE, AND 1-1/2-INCH BY 40 FOOT FLEX HOSE
26	1	TEST KIT	TAYLOR	K2000-5	DUPLEX CAPABLE OF MEETING ALL CHEMICAL TESTS SPECIFIED BY THE CONNECTICUT PUBLIC HEALTH CODE, 19-13-B33b
27	1	FIRST AID KIT	BEL-AQUA	PK5301	FIRST AID KIT WITH 24 UNIT / 25 PEOPLE BY THE CONNECTICUT PUBLIC HEALTH CODE, 19-13-B33b
28	1	HANDLE	BEL-AQUA	303T16	16FT - 32FT TELESCOPIC HANDLE, PROVIDE STAINLESS STEEL MOUNTING BRACKETS.
29	1	LEAF SKIMMER	BEL-AQUA	R122	LEAF SKIMMER -PRO WITH POLE
30	1	BRUSH	BEL-AQUA	ELM0102	24-INCH WIDE STRAIGHT END WALL BRUSHES WITH NYLON BRISTLES AND DIE-CAST ALUMINUM HANDLE BRACKET.
31	2	VACUUM HOSE	-	1.5 IN. BY 50 FT.	HEAVY-DUTY VACUUM HOSE
32	1	PORTABLE VACUUM CLEANER SYSTEM	SPECTRUM AQUATICS	10670	PORTABLE SKID MOUNTED UNIT WITH BF155 CARTRIDGE FILTER WITH STA-RITE DYNA-MAX MODEL 433-11, FULL RATE 1.0 HP, 115V, 10 AMP, 60 HZ, SELF PRIMING PUMP WITH 100 FOOT CORD AND PUMP. REQUIRES PLUG TO BE PLUGGED INTO A GFI OUTLET.
33	1	PORTABLE ADA AQUATIC LIFT	SR SMITH	ML300	AQUATIC POOL LIFT INCLUDING DECK ANCHOR (ADA COMPLIANT). CHARGER TO BE WALL MOUNTED IN FILTER ROOM.
34	2	911 PHONE	RATH POOL PHONES	624MPOOL	HANDSET PHONE WITH KEYPAD IN WATER TIGHT ENCLOSURE, LIFT HANDSET AND DIAL APPROPRIATE PHONE NUMBER, COIL CORD.
35	3	LIFE GUARD PLATFORM	SRSMITH	US48700	316L STAINLESS STEEL, LIFE GUARD CHAR WITH UMBRELLA TUBE AND LIFE RING HOLDER
35A	1	POOL COVER	LOOP LOC	ULTRA-LOC II	POOL WINTER COVER AND ANCHORING SYSTEM

LADDERS AND HANDRAILS

MARK	QTY	ITEM	MANUFACTURER	CAT NO.	DESCRIPTION
36	2	HAND RAIL	SR SMITH	SEE POOL SECTION	3 BEND 1.9-INCH O.D. BY 0.065-INCH WALL POLISHED STAINLESS STEEL
37	8	GRAB RAIL	SR SMITH	10179	FIGURE 4 STAINLESS RAILS 1.9-INCH O.D. BY 0.065-INCH WALL POLISHED STAINLESS STEEL.
38	11	STEP INSERT	KDI PARAGON	320104	STAINLESS STEEL INSERT WITH SLOPED TREAD TO POOL, POLISHED, CORROSION-RESISTANT, AND NON-SKID SAND BLASTED BOTTOM OF TREAD. (3) 3 TREAD AND (1) 2 TREAD INSTALLATIONS
39	20	WEDGE ANCHORS	SR SMITH	IAA-100	4-INCH BRONZE INSTITUTIONAL ANCHOR ASSEMBLY FOR 1.90 INCH O.D. COMMERCIAL RAILS, SOCKET WITH GROUNDING LUG, EACH SOCKET SHALL BE PROPERLY GROUNDED IN ACCORDANCE WITH NATIONAL ELECTRICAL CODE STANDARDS.
40	20	ESCUTCHEON PLATE	SR SMITH	EP-100F	STAINLESS STEEL ROUND COVER PLATE FOR 1.90-INCH O.D. RAILS.

RACING EQUIPMENT

MARK	QTY	ITEM	MANUFACTURER	CAT NO.	DESCRIPTION
41	6	RACING LANE LINES	PARAGON	76102-1	BLUE AND WHITE CONTINUOUS 4-INCH DIAMETER 25 YARD COMPETITOR ANTI-TURBULENT RACING LANES INCLUDING STORAGE REELS

MAIN POOL DATA CHART

DESCRIPTION	AMOUNT/RATE
TOTAL POOL SURFACE WATER AREA - SQUARE FEET (SF)	6,168 S.F.
TOTAL POOL PERIMETER (FEET)	453'-4"
POOL DEPTH (FEET)	0'-0" TO 5'-6"
TOTAL POOL VOLUME - (GALS)	168,481 GALS
POOL TURNOVER (T.O.R.)	3.90 HRS. AT 720 GPM
FLOW RATE - POOL	720 GPM
BATHING LOAD	246 PERSONS
FILTER AREA	63.4 SQFT
FILTER APPLICATION RATE	11.4 GPM PER SQFT

MAIN POOL CALCULATIONS:
MAIN DRAIN VELOCITY:
FILTER:
(2) 18-IN SQUARE MAIN DRAIN -
TOTAL OPEN AREA:
2 X 183.06 SQ. IN.(PER MANF.) / 144 =
2.54 SQ. FT.
TOTAL FLOW:
720 GPM/449 (GPM/(CU. FT./S) =
1.60 CU. FT./S
TOTAL VELOCITY:
1.60 (CU. FT./S)/2.54 SQ. FT. = **0.63 F.P.S.**

SURGE TANK CALCULATIONS:
POOL AREA: 6,168 SQ. FT.
SURGE REQUIRED:
6,168 SQ.FT. X 1 SQ.FT. PER GAL. = **6,168 GAL.**
POOL GUTTER:
CROSS SECTION GUTTER AREA: 0.75 SQ.FT.
GUTTER SURGE VOLUME: 0.75 SQ.FT. X 435.33 FT X 7.481 GAL PER CU.FT. = **2,443 GAL.**
POOL TANK SURGE:
TANK SURGE: (L)23.66 FT. X (W)8.66 FT. X 3.5 FT HEIGHT OF BOTTOM OF FLOAT TO GUTTER CONVERTER INVERT (SURGE) X 7.481 CU.FT. PER GAL = **5,371 GAL.**
TOTAL SURGE CAPACITY: 5,371GAL + 2,443 GAL = **7,814 GAL.**

THE ELECTRICAL CONTRACTOR SHALL GROUND AND BOND ALL ELECTRICAL EQUIPMENT, POOL REINFORCING, POOL ACCESSORIES, AND PIPING IN ACCORDANCE WITH NATIONAL ELECTRIC CODE REQUIREMENTS, ARTICLE 680. THE ELECTRICAL CONTRACTOR SHALL OBTAIN A COPY OF ALL APPLICABLE LOCAL STATE ELECTRICAL CODE REGULATIONS.

CONSTRUCTION DOCUMENTS 12/11/15

Weston&Sampson®
273 Dividend Road, Rocky Hill, CT 06067
(860) 513-1473 (800) SAMPSON
www.westonandsampson.com

No.	Date	Dr.By	Ck.By	App.By	Description
1	03/03/16	SAA	MPM	CBW	ADDENDUM #1

APPROVED 03/07/16 DATE
REGISTERED PROFESSIONAL ENGINEER

STATE OF CONNECTICUT CHRISTOPHER B. WESTER No. 17476 LICENSED PROFESSIONAL ENGINEER

TOWN OF GREENWICH – DEPARTMENT OF PUBLIC WORKS
RITCH AVENUE WEST, GREENWICH, CONNECTICUT
BYRAM PARK POOL REPLACEMENT

ACTIVITY POOL PIPING SCHEMATIC

CADD NO.	SCALE:	CONTRACT:	JOB NO.	DR.BY	DSN.BY	CHK.BY	APP.BY
GREENWICH	AS NOTED	–	2130336	S.A.A.	M.P.M.	STG	CBW

SP2.4
FILE NO.
SHEET – OF –

03/07/2016 09:39:00AM Z:\MA-Boston-Projects\Aquatics\Greenwich, CT- Byram Park Pool\CAD\0-Current_Set\Sheets\SP-2.4 ACTIVITY POOL PIPING SCHEMATIC AND EQUIP LIST.dwg

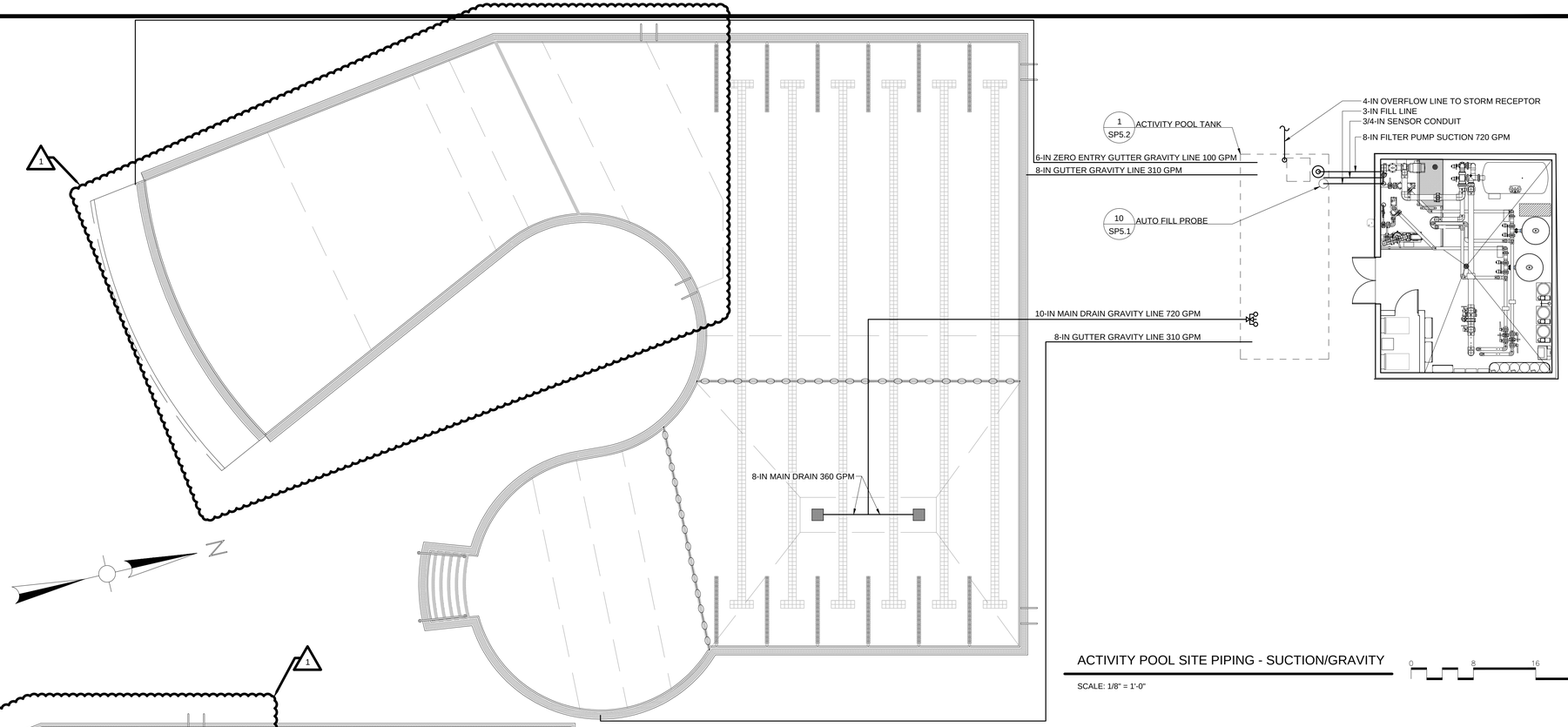

ACTIVITY POOL SITE PIPING - SUCTION/GRAVITY

SCALE: 1/8" = 1'-0"

0 8 16 24

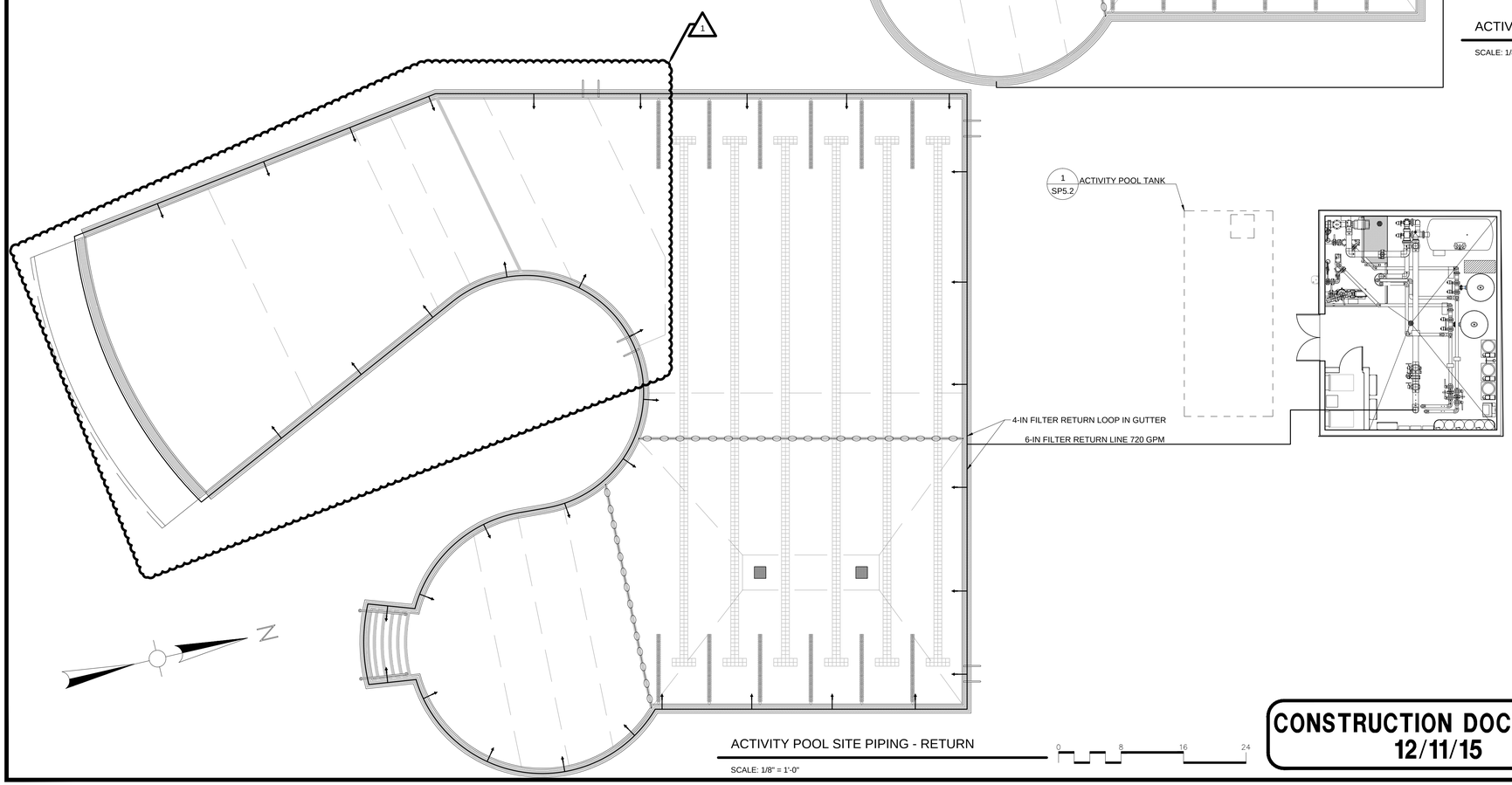

ACTIVITY POOL SITE PIPING - RETURN

SCALE: 1/8" = 1'-0"

0 8 16 24

CONSTRUCTION DOCUMENTS
12/11/15

THE ELECTRICAL CONTRACTOR SHALL GROUND AND BOND ALL ELECTRICAL EQUIPMENT, POOL REINFORCING, POOL ACCESSORIES, AND PIPING IN ACCORDANCE WITH NATIONAL ELECTRIC CODE REQUIREMENTS, ARTICLE 680. THE ELECTRICAL CONTRACTOR SHALL OBTAIN A COPY OF ALL APPLICABLE LOCAL STATE ELECTRICAL CODE REGULATIONS.

Weston&Sampson®
273 Dividend Road, Rocky Hill, CT 06067
(860) 513-1473 (800) SAMPSON
www.westonandsampson.com

No.	Date	Dr.By	Ck.By	App.By	Description
1	03/03/16	SAA	MPM	CBW	ADDENDUM #1

APPROVED

03/07/16
DATE

REGISTERED PROFESSIONAL ENGINEER

STATE OF CONNECTICUT CHRISTOPHER B. WEST No. 17475 LICENSED PROFESSIONAL ENGINEER

TOWN OF GREENWICH – DEPARTMENT OF PUBLIC WORKS
RITCH AVENUE WEST, GREENWICH, CONNECTICUT

BYRAM PARK POOL REPLACEMENT

ACTIVITY POOL SITE PIPING

CADD NO.	SCALE:	CONTRACT:	JOB NO.	DR.BY	DSN.BY	CHK.BY	APP.BY
GREENWICH	AS NOTED	–	2130336	S.A.A.	M.P.M.	STG	CBW

SP2.5

FILE NO.

SHEET – OF –

03/07/2016 09:39:38AM Z:\MA-Boston-Projects\Aquatics\Greenwich, CT- Byram Park Pool\CAD\0-Current_Set\Sheets\SP-2.5 ACTIVITY POOL SITE PIPING.dwg

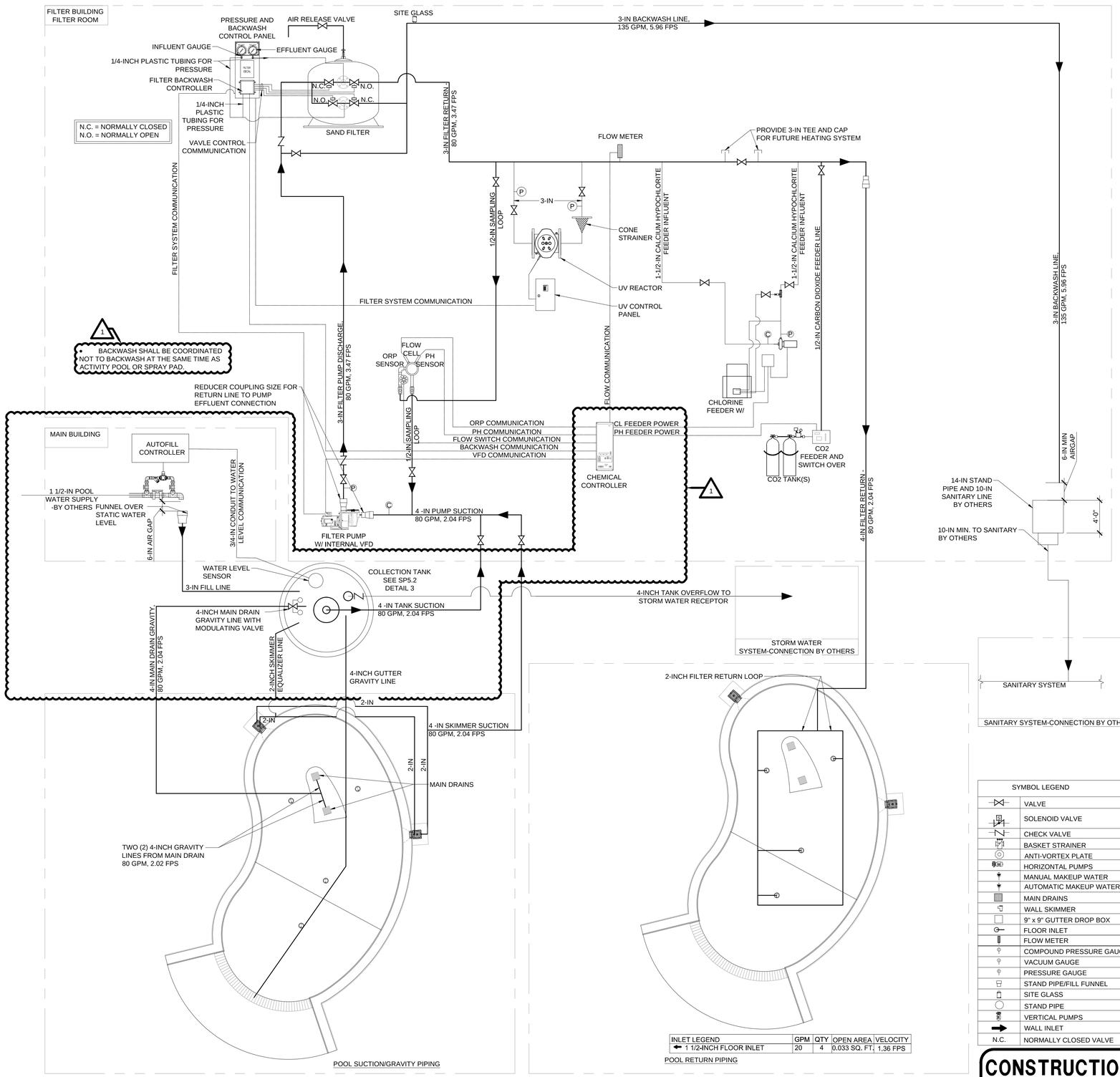

INLET LEGEND	GPM	QTY	OPEN AREA	VELOCITY
1 1/2-INCH FLOOR INLET	20	4	0.033 SQ. FT.	1.36 FPS

WADING POOL PIPING SCHEMATIC

SCALE: NOT TO SCALE

WADING POOL EQUIPMENT SCHEDULE

PERIMETER OVERFLOW AND RECIRCULATION SYSTEM

MARK	QTY	ITEM	MANUFACTURER	CAT NO.	DESCRIPTION
1	2	MAIN DRAIN GRATE & SUMP	LAWSON AQUATICS	MLD-FG-0909-WT	9-INCH BY 9-INCH PVC SUMP/GRATE DOMED WITH 4-INCH SIDE PORT. COMPLY WITH ASME/ANSI A112.19.8-2007 UNBLOCKABLE REQUIREMENTS. OPEN AREA PROVIDED 42.12 SQ. IN., 40 GPM.
2	4	H. VALVE	HAYWARD	SP1056	HYDROSTATIC RELIEF VALVE
3	4	COL.TUBE	HAYWARD	SP1055	COMMERCIAL COLLECTOR TUBE
4	2	SKIMMER	HAYWARD	SP1082	NSF APPROVED SKIMMER, EQUALIZER, 2-INCH SLIP, FLAP WEIR
5	4	FLOOR RETURN FITTINGS	SR SMITH	A41014	CHROME PLATED CAST BRASS FLOW ADJUSTABLE, FLUSH MOUNTED 1-1/2-IN. FLOOR INLET

FILTER AREA MISCELLANEOUS EQUIPMENT

MARK	QTY	ITEM	MANUFACTURER	CAT NO.	DESCRIPTION
6	3	PRESSURE GAUGE	WEKSLER	UA25B4L	2-1/2-INCH DIA. FACE, 0-60 PSI
7	1	COMPOUND GAUGE	WEKSLER	UA25K4L	2-1/2-INCH DIA. FACE, 0-30 INCHES HG, 0-60 PSI
8	1	EYE WASH STATION	SHARED WITH ACTIVITY POOL		

FILTRATION EQUIPMENT

MARK	QTY	ITEM	MANUFACTURER	CAT NO.	DESCRIPTION
9	1	COLLECTION TANK	PHOENIX PRECAST PRODUCTS	PRECAST	4'-0" DIAMETER X 5'-6" HEIGHT COLLECTION TANK WITH TANK HATCH OPENING, AND ALL PIPE SLEEVES PER PIPING PLANS.
9A	1	TANK HATCH	BILCO	TER-4	SINGLE LEAF HATCH WITH 150 POUNDS PER SQUARE FOOT LOAD RATING, ALUMINUM FRAME, INFILL TO MATCH SURROUNDING DECK, T-316 STAINLESS HARDWARE
10	1	ANTI-VORTEX PLATE	NEPTUNE BENSON	AVPLATE04PVCKIT	PVC PLATE WITH ALL STAINLESS STEEL HARDWARE FOR 4-INCH PIPE
11	1	WATER LEVEL SENSOR	NEPTUNE BENSON	WLC-200	WATER LEVEL CONTROL AND 3 PROBE WITH FITTINGS AND PROBES AS REQUIRED FOR FILL CONTROL AND SHALL INCLUDE REQUIRED SOLENOID VALVE.
12	1	FILTER PUMP	PENTAIR	011012	3 HP VARIABLE FLOW WITH MECHANICAL SYSTEM, 80 GPM AT 90 TDH, 230 VOLT, 1 PHASE AND VFD ATTACHED
13	1	FLOW METER	GF SIGNET	2536	DIGITAL PADDLEWHEEL WITH DISPLAY AND RELAY TO VFD AND CHEMICAL COMTROLLER
14	1	MODULATION VALVE	NEPTUNE BENSON	DVINLINEPVC04D	304 STAINLESS STEEL 8-INCH DIAMETER PLASTIC FLOATS, SOLID CORE 5/8-INCH STAINLESS STEEL ROD MAX CLOSER = 80%
15	1	FILTER	NEPTUNE BENSON	42CCFG-3WM3-3	HI-RATE SAND FILTER COMPLETE AUTOMATIC SYSTEM, SCHEDULE 80 PVC PIPING WITH MP3 BACKWASH CONTROLLER.

CHEMICAL EQUIPMENT

MARK	QTY	ITEM	MANUFACTURER	CAT NO.	DESCRIPTION
16	1	CHEMICAL CONTROLLER	BEC SYSTEMS	BECSYS5	CHEMICAL CONTROLLER WITH FLOW CELL ASSEMBLY WITH ORP AND PH SENSOR VFD CONTROL, CONNECT TO VFD, WATER/LEVEL AND BACKWASH CONTROL PANEL.
17	1	TABLET CHLORINE FEEDER	PULSAR	PULSAR45	CHLORINE TABLET FEEDER COMPLETE WITH PULSAR BOOSTER PUMP AND VENTURI. BOOSTER PUMP SHALL BE 1# 115V.
18	1	CO_2	BEC SYSTEMS	BECSYS CO2	SINGLE TANK REGULATOR AND AUTOMATIC DUAL TANK SWITCH OVER CARBON DIOXIDE FEEDER 20-200 SCFH, 115V WITH HEATER
19	1	UV	ETS	ECP-113-5SPV	ULTRA VIOLET DISINFECTION WITH CONE STRAINER, 1 PHASE 230V, CONTROL PANEL SHALL BE NEMA 12 MINIMUM. PROVIDE (1) EXTRA SET OF BULBS.

DECK SAFETY & MAINTENANCE EQUIPMENT

MARK	QTY	ITEM	MANUFACTURER	CAT NO.	DESCRIPTION
20	1	LIFE RING	BEL-AQUA	34124 /LL60	24-INCH DIAMETER PLASTIC RING WITH 1/4-INCH BY 60 FOOT LONG SAFETY LINE. SHALL BE ATTACHED TO LIFEGUARD STAND
21	1	LIFE HOOK	BEL-AQUA	R153 / 30316	SHEPARD TYPE LIFE HOOK, END ANCHORED TO A 16 FOOT ALUMINUM HANDLE. SHALL BE ATTACHED TO LIFEGUARD STAND
22	1	LIFE RING HOLDER	LINCOLN	44-100	STAINLESS STEEL LIFE RING HOLDER
23	1	VACUUM CLEANER HEAD	SHARED WITH ACTIVITY POOL		
24	1	TEST KIT	SHARED WITH ACTIVITY POOL		
25	1	FIRST AID KIT	SHARED WITH ACTIVITY POOL		
26	1	HANDLE	SHARED WITH ACTIVITY POOL		
27	1	LEAF SKIMMER	SHARED WITH ACTIVITY POOL		
28	1	BRUSH	BEL-AQUA	ELM0102	24-INCH WIDE STRAIGHT END WALL BRUSHES WITH NYLON BRISTLES AND DIE-CAST ALUMINUM HANDLE BRACKET.
29	1	VACUUM HOSE	SHARED WITH ACTIVITY POOL		
30	1	PORTABLE VACUUM CLEANER SYSTEM	SHARED WITH ACTIVITY POOL		
30	1	911 PHONE	RATH POOL PHONES	624MPOOL	HANDSET PHONE WITH KEYPAD IN WATER TIGHT ENCLOSURE, LIFT HANDSET AND DIAL APPROPRIATE PHONE NUMBER, COIL CORD.

POOL DATA CHART

DESCRIPTION	AMOUNT/RATE
TOTAL POOL SURFACE WATER AREA - SQUARE FEET (SF)	331 S.F.
TOTAL POOL PERIMETER (FEET)	75'-5"
POOL DEPTH (FEET)	0'-0" TO 1'-6"
TOTAL POOL VOLUME - (GALS)	1,857 GALS
POOL TURNOVER (T.O.R.)	(23 MIN.) 0.39 HRS. AT 80 GPM
FLOW RATE - POOL	80 GPM
BATHING LOAD	33 PERSONS
FILTER AREA	9.0 SQFT
FILTER APPLICATION RATE	8.9 GPM PER SQFT

SYMBOL LEGEND

	VALVE
	SOLENOID VALVE
	CHECK VALVE
	BASKET STRAINER
	ANTI-VORTEX PLATE
	HORIZONTAL PUMPS
	MANUAL MAKEUP WATER
	AUTOMATIC MAKEUP WATER
	MAIN DRAINS
	WALL SKIMMER
	9" x 9" GUTTER DROP BOX
	FLOOR INLET
	FLOW METER
	COMPOUND PRESSURE GAUGE
	VACUUM GAUGE
	PRESSURE GAUGE
	STAND PIPE/FILL FUNNEL
	SITE GLASS
	STAND PIPE
	VERTICAL PUMPS
	WALL INLET
N.C.	NORMALLY CLOSED VALVE

WADING POOL CALCULATIONS:
MAIN DRAIN VELOCITY:

FILTER/BOOSTER:
(2) 9-IN SQUARE MAIN DRAIN -
TOTAL OPEN AREA:
2 X 42.12 (PER MANF.) / 144 = 0.59 SQ. FT.
TOTAL FLOW:
80 GPM / 449 (GPM/(CU. FT./S) = 0.18 CU. FT./S
TOTAL VELOCITY:
0.18 (CU. FT./S) / 0.59 SQ. FT. = 0.30 F.P.S.

CONSTRUCTION DOCUMENTS
12/11/15

THE ELECTRICAL CONTRACTOR SHALL GROUND AND BOND ALL ELECTRICAL EQUIPMENT, POOL REINFORCING, POOL ACCESSORIES, AND PIPING IN ACCORDANCE WITH NATIONAL ELECTRIC CODE REQUIREMENTS, ARTICLE 680. THE ELECTRICAL CONTRACTOR SHALL OBTAIN A COPY OF ALL APPLICABLE LOCAL STATE ELECTRICAL CODE REGULATIONS.

Weston&Sampson®
273 Dividend Road, Rocky Hill, CT 06067
(860) 513-1473 (800) SAMPSON
www.westonandsampson.com

No.	Date	Dr.By	Ck.By	App.By	Description
1	03/03/16	SAA	MPM	CBW	ADDENDUM #1

APPROVED
03/07/16
DATE
REGISTERED PROFESSIONAL ENGINEER

STATE OF CONNECTICUT
No. 17475
REGISTERED PROFESSIONAL ENGINEER

TOWN OF GREENWICH – DEPARTMENT OF PUBLIC WORKS
RITCH AVENUE WEST, GREENWICH, CONNECTICUT
BYRAM PARK POOL REPLACEMENT

WADING POOL PIPING SCHEMTIC

CADD NO.	SCALE:	CONTRACT:	JOB NO.	DR.BY	DSN.BY	CHK.BY	APP.BY
GREENWICH	AS NOTED	–	2130336	S.A.A.	M.P.M.	STG	CBW

FILE NO. SP3.2

SHEET – OF –

03/07/2016 09:41:02AM Z:\MA-Boston-Projects\Aquatics\Greenwich, CT- Byram Park Pool\CAD\0-Current_Set\Sheets\SP-3.2 WADING POOL PIPING SCHEMATIC.dwg

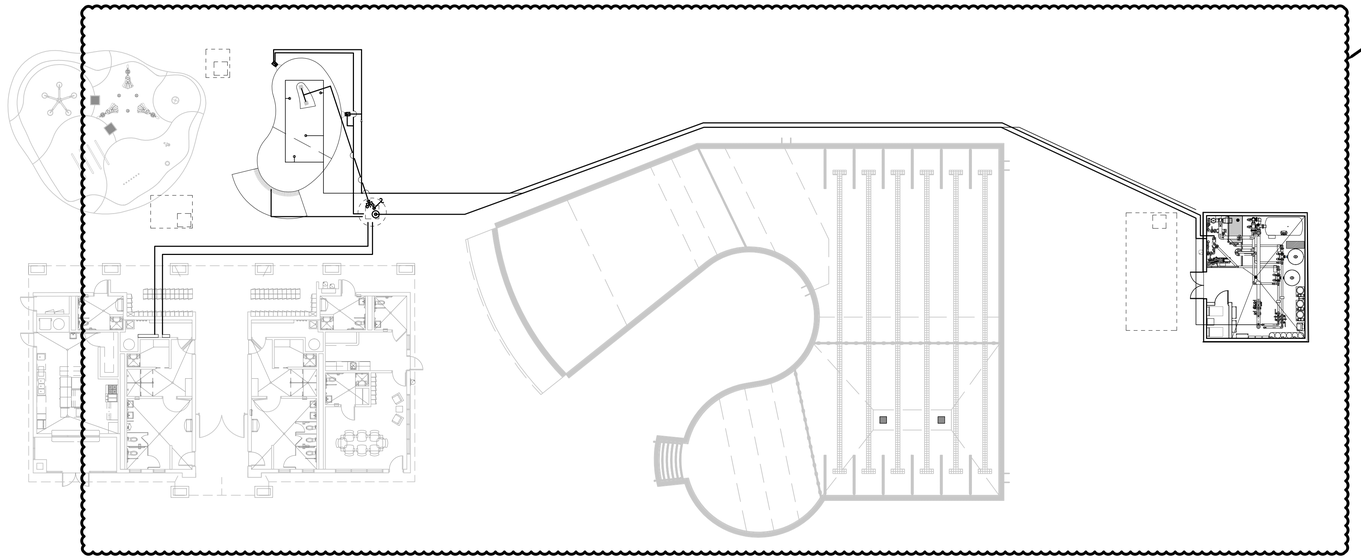

WADING POOL SITE PIPING - OVERALL FOR REFERENCE ONLY

SCALE: 1/16" = 1'-0"

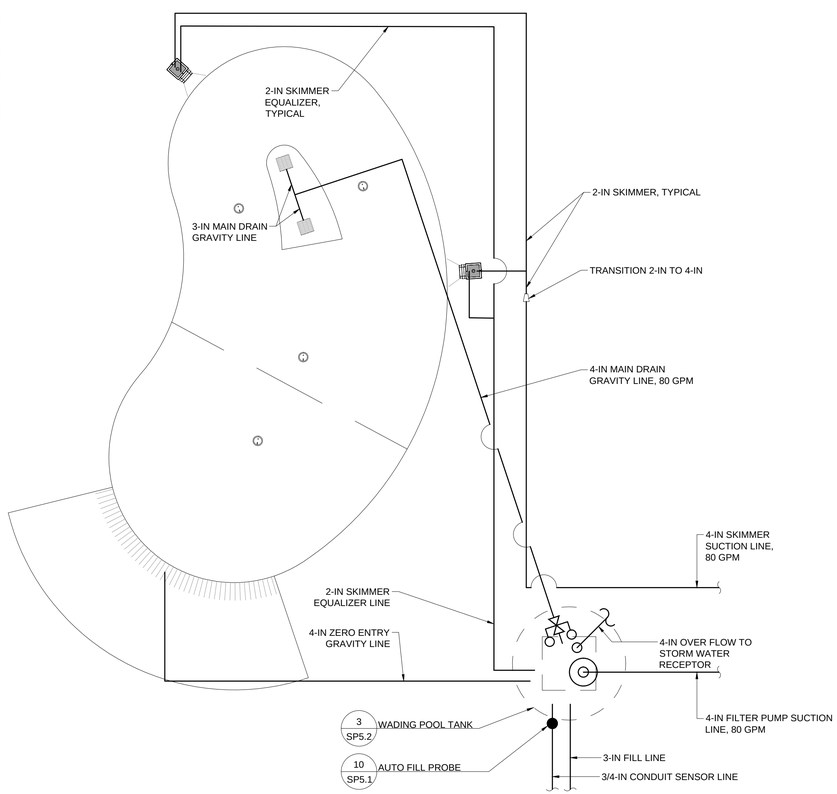

WADING POOL SITE PIPING - SUCTION/GRAVITY

SCALE: 1/4" = 1'-0"

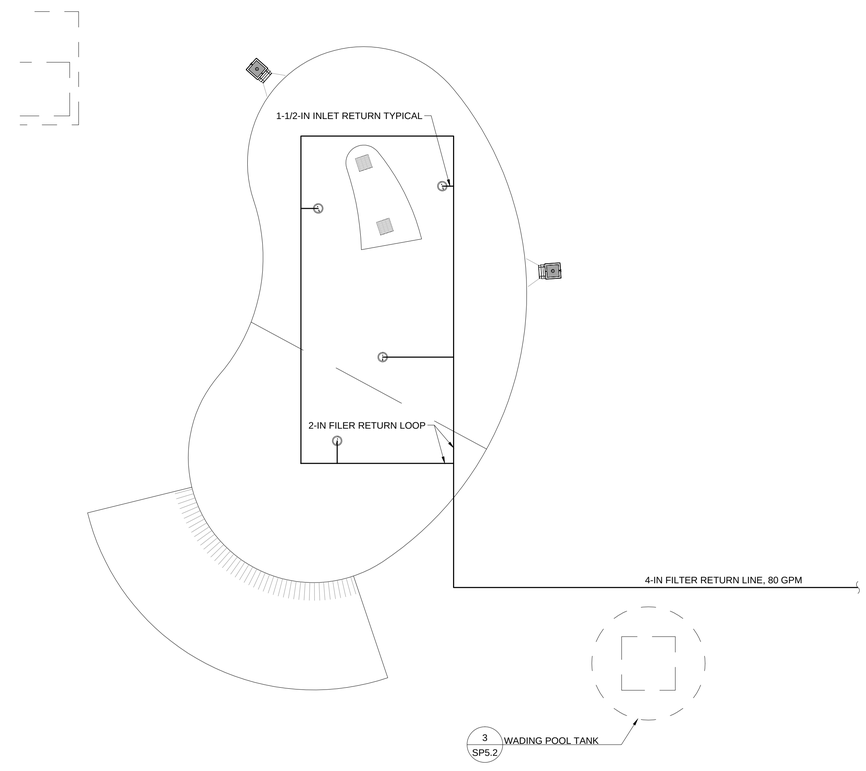

WADING POOL SITE PIPING - RETURN

SCALE: 1/4" = 1'-0"

CONSTRUCTION DOCUMENTS
12/11/15

THE ELECTRICAL CONTRACTOR SHALL GROUND AND BOND ALL ELECTRICAL EQUIPMENT, POOL REINFORCING, POOL ACCESSORIES, AND PIPING IN ACCORDANCE WITH NATIONAL ELECTRIC CODE REQUIREMENTS, ARTICLE 680. THE ELECTRICAL CONTRACTOR SHALL OBTAIN A COPY OF ALL APPLICABLE LOCAL STATE ELECTRICAL CODE REGULATIONS.

Weston&Sampson®
273 Dividend Road, Rocky Hill, CT 06067
(860) 513-1473 (800) SAMPSON
www.westonandsampson.com

No.	Date	Dr.By	Ck.By	App.By	Description
1	03/03/16	SAA	MPM	CBW	ADDENDUM #1

APPROVED

REGISTERED PROFESSIONAL ENGINEER 03/07/16 DATE

STATE OF CONNECTICUT CHARLES BRYAN WEST No. 17475 REGISTERED PROFESSIONAL ENGINEER

TOWN OF GREENWICH – DEPARTMENT OF PUBLIC WORKS
RITCH AVENUE WEST, GREENWICH, CONNECTICUT

BYRAM PARK POOL REPLACEMENT

WADING POOL SITE PIPING

CADD NO.	SCALE:	CONTRACT:	JOB NO.	DR.BY	DSN.BY	CHK.BY	APP.BY
GREENWICH	AS NOTED	–	2130336	S.A.A.	M.P.M.	STG	CBW

FILE NO. SP3.3

SHEET – OF –

03/07/2016 09:41:38AM Z:\MA-Boston-Projects\Aquatics\Greenwich, CT- Byram Park Pool\CAD\0-Current_Set\Sheets\SP-3.3 WADING POOL SITE PIPING.dwg

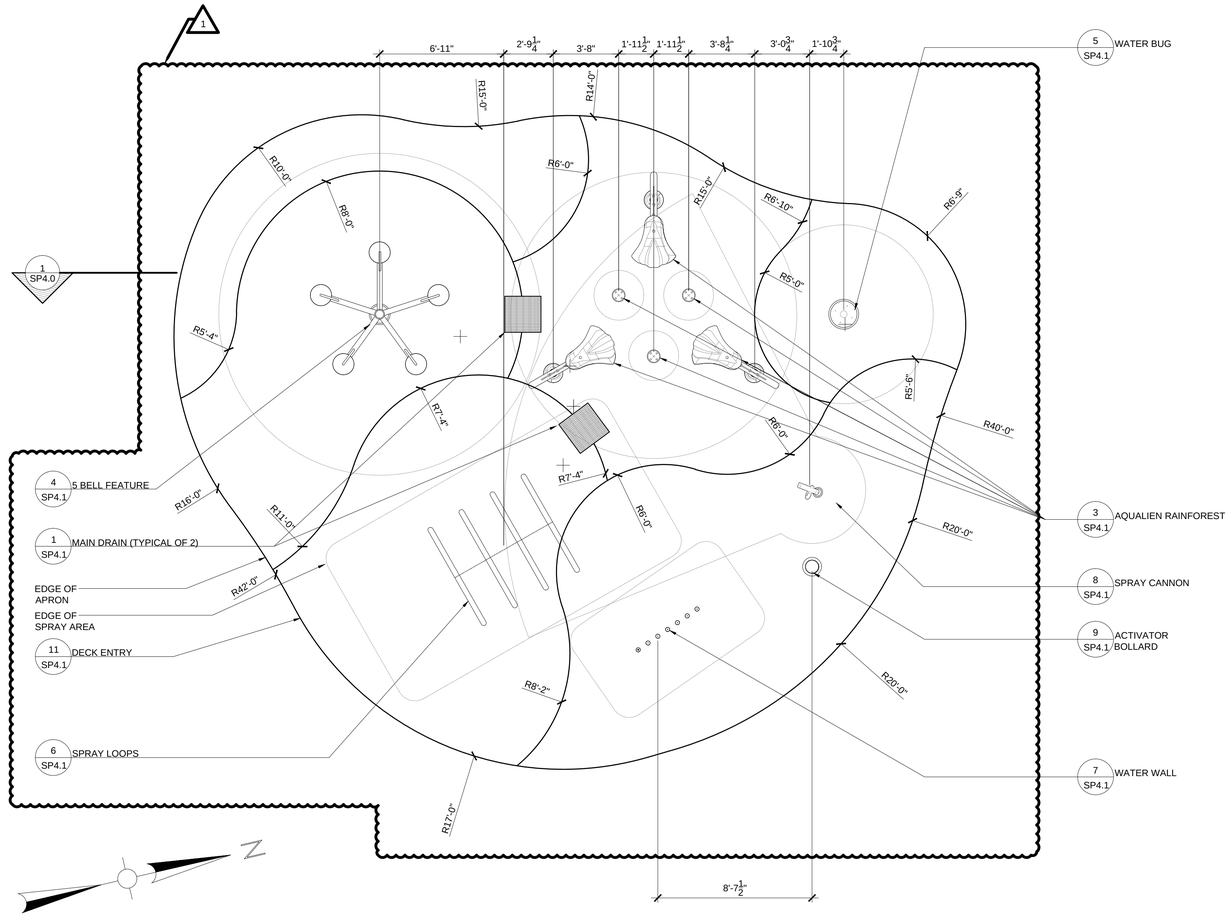

SPRAY DECK PLAN VIEW

SCALE: 1/4" = 1'-0"

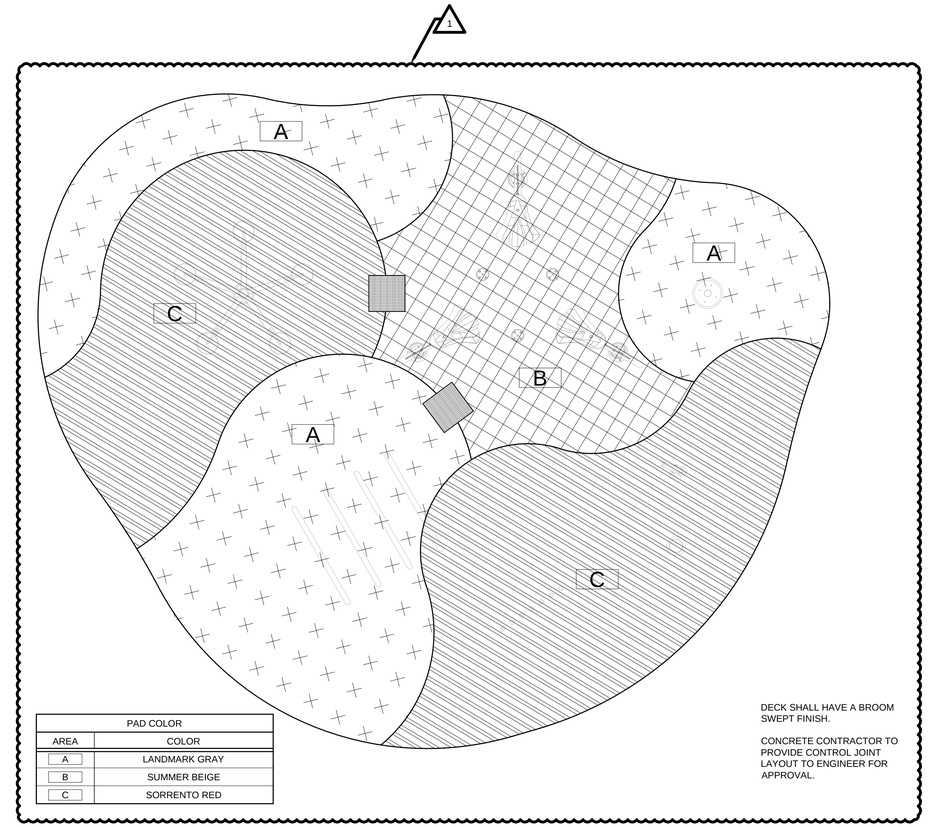

PAD COLOR	
AREA	COLOR
A	LANDMARK GRAY
B	SUMMER BEIGE
C	SORRENTO RED

DECK SHALL HAVE A BROOM SWEPT FINISH.

CONCRETE CONTRACTOR TO PROVIDE CONTROL JOINT LAYOUT TO ENGINEER FOR APPROVAL.

SPRAY DECK PLAN VIEW

SCALE: 1/4" = 1'-0"

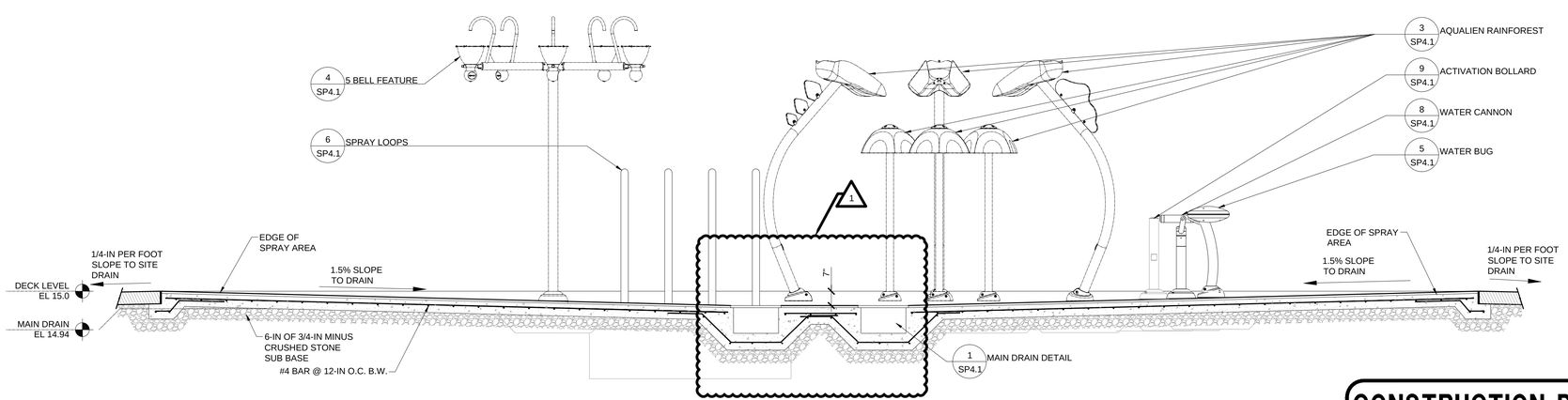

1 SPRAY DECK SECTION

SCALE: 3/8" = 1'-0"

CONSTRUCTION DOCUMENTS
12/11/15

THE ELECTRICAL CONTRACTOR SHALL GROUND AND BOND ALL ELECTRICAL EQUIPMENT, POOL REINFORCING, POOL ACCESSORIES, AND PIPING IN ACCORDANCE WITH NATIONAL ELECTRIC CODE REQUIREMENTS, ARTICLE 680. THE ELECTRICAL CONTRACTOR SHALL OBTAIN A COPY OF ALL APPLICABLE LOCAL STATE ELECTRICAL CODE REGULATIONS.

Weston&Sampson®
273 Dividend Road, Rocky Hill, CT 06067
(860) 513-1473 (800) SAMPSON
www.westonandsampson.com

No.	Date	Dr.By	Ck.By	App.By	Description
1	03/03/16	SAA	MPM	CBW	ADDENDUM #1

APPROVED 03/07/16 DATE

REGISTERED PROFESSIONAL ENGINEER

STATE OF CONNECTICUT CHRISTOPHER B. WHITE No. 17475 REGISTERED PROFESSIONAL ENGINEER

TOWN OF GREENWICH – DEPARTMENT OF PUBLIC WORKS
RITCH AVENUE WEST, GREENWICH, CONNECTICUT
BYRAM PARK POOL REPLACEMENT

SPRAY DECK PLAN

CADD NO.	SCALE:	CONTRACT:	JOB NO.	DR.BY	DSN.BY	CHK.BY	APP.BY
GREENWICH	AS NOTED	–	2130336	S.A.A.	M.P.M.	STG	CBW

FILE NO. SP4.0

SHEET – OF –

03/07/2016 09:42:08AM Z:\MA-Boston-Projects\Aquatics\Greenwich, CT- Byram Park Pool\CAD\0-Current_Set\Sheets\SP-4.0 SPRAY PAD PLAN.dwg

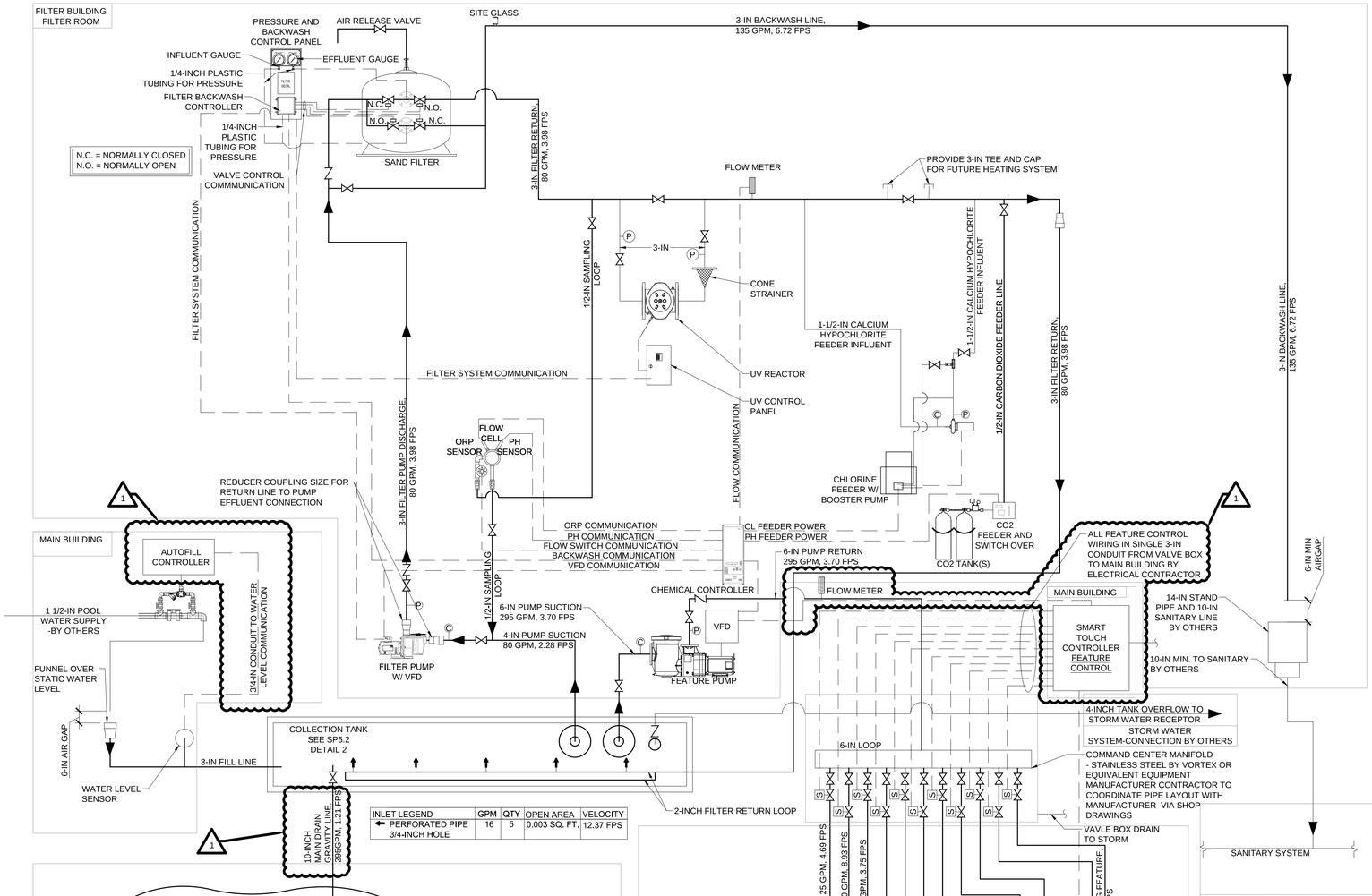

INLET LEGEND	GPM	QTY	OPEN AREA	VELOCITY
← PERFORATED PIPE 3/4-INCH HOLE	16	5	0.003 SQ. FT.	12.37 FPS

SPRAY DECK EQUIPMENT SCHEDULE

PERIMETER OVERFLOW AND RECIRCULATION SYSTEM

MARK	QTY	ITEM	MANUFACTURER	CAT NO.	DESCRIPTION
1	2	MAIN DRAIN GRATE & SUMP	LAWSON AQUATICS	MLD-FG-2424-WT	24-INCH BY 24-INCH PVC GRATE WITH FIBERGLASS SUPPORT RODS COMPLY WITH ASME/ANSI A112.19.8-2007 UNBLOCKABLE REQUIREMENTS. OPEN AREA PROVIDED 216 SQ. IN., 295 GPM.
2	1	HYDROSTATIC RELIEF VALVE	CUSTOM	CUSTOM	ONE VALVE MODEL SP1056 HAYWARD HYDROSTATIC RELIEF VALVE

FILTER AREA MISCELLANEOUS EQUIPMENT

MARK	QTY	ITEM	MANUFACTURER	CAT NO.	DESCRIPTION
3	5	PRESSURE GAUGE	WEKSLER	UA2584L	2-1/2-INCH DIA. FACE, 0-60 PSI
4	3	COMPOUND GAUGE	WEKSLER	UA25K4L	2-1/2-INCH DIA. FACE, 0-30 INCHES HG, 0-60 PSI
5	1	EYE WASH STATION	SHARED WITH ACTIVITY POOL		

FILTRATION EQUIPMENT

MARK	QTY	ITEM	MANUFACTURER	CAT NO.	DESCRIPTION
6	1	COLLECTION TANK	PHOENIX PRECAST PRODUCTS	PRECAST	5'-0" X 7'-0" X 5'-0" COLLECTION TANK WITH TANK HATCH OPENING, AND ALL PIPE SLEEVES PER PIPING PLANS.
7	2	TANK HATCH	BILCO	TER-4	HATCH, SINGLE LEAF, 150 POUND PER SQUARE FOOT LOAD RATING, ALUMINUM FRAME, INFILL TO MATCH SURROUNDINGS AND T-316 STAINLESS STEEL HARDWARE.
8	2	ANTI-VORTEX PLATE	NEPTUNE BENSON	(1)AVPLATE04PVCKIT (1)AVPLATE06PVCKIT	PVC PLATE WITH ALL STAINLESS STEEL HARDWARE FOR 4-INCH AND 6-INCH PIPE
9	1	WATER LEVEL SENSOR	NEPTUNE BENSON	WLC-200	WATER LEVEL CONTROL AND 3 PROBE WITH FITTINGS AND PROBES AS REQUIRED FOR FILL CONTROL AND SHALL INCLUDE REQUIRED SOLENOID VALVE.
10	1	FILTER PUMP	PENTAIR	011012	3 HP VARIABLE FLOW WITH INTEGRAL STRAINER, 80 GPM AT 45.34 TDH, 230 VOLT, 1 PHASE AND VFD ATTACHED
11	1	FEATURE PUMP	PENTAIR	340033	7.5 HP PUMP WITH INTEGRAL STRAINER, 295 GPM AT 45.34 TDH, 460 VOLT, 3 PHASE
12	1	VFD	PENTAIR	ACUDRIVE XS	7.5 HP VFD, 460V, 3 PHASE, WITH DISCONNECT & BYPASS VARIABLE FREQUENCY DRIVE, NEMA 12 ENCLOSURE.
13	2	FLOW METER	GF SIGNET	2536/9900	DIGITAL PADDLEWHEEL WITH DISPLAY AND RELAY TO VFD
14	1	FILTER	NEPTUNE BENSON	42CCFG-3WAM3-3	HI-RATE SAND FILTER COMPLETE AUTOMATIC SYSTEM, SCHEDULE 80 PVC PIPING WITH MPP3 BACKWASH CONTROLLER.

CHEMICAL EQUIPMENT

MARK	QTY	ITEM	MANUFACTURER	CAT NO.	DESCRIPTION
15	1	CHEMICAL CONTROLLER	BEC SYSTEMS	BECSYS5	CHEMICAL CONTROLLER WITH FLOW CELL ASSEMBLY WITH ORP AND PH SENSOR VFD CONTROL, CONNECT TO VFD, WATERLEVEL AND BACKWASH CONTROL PANEL.
16	1	TABLET CHLORINE FEEDER	PULSAR	PULSAR45	CHLORINE TABLET FEEDER COMPLETE WITH PULSAR BOOSTER PUMP AND VENTURI. BOOSTER PUMP SHALL BE 1# 115V.
17	1	CO_2	BEC SYSTEMS	BECSYS CO2	SINGLE TANK REGULATOR AND AUTOMATIC DUAL TANK SWITCH OVER CARBON DIOXIDE FEEDER 20-200 SCFH, 115V WITH HEATER
18	1	UV	ETS	ECP-113-5SPV	ULTRA VIOLET DISINFECTION WITH CONE STRAINER, 1 PHASE 230V, CONTROL PANEL SHALL BE NEMA 12 MINIMUM PROVIDE (1) EXTRA SET OF BULBS.

DECK SAFETY & MAINTENANCE EQUIPMENT

MARK	QTY	ITEM	MANUFACTURER	CAT NO.	DESCRIPTION
19	1	VACUUM CLEANER HEAD	SHARED WITH ACTIVITY POOL		
20	1	TEST KIT	SHARED WITH ACTIVITY POOL		
21	1	FIRST AID KIT	SHARED WITH ACTIVITY POOL		
22	1	BRUSH	SHARED WITH WADING POOL		
23	1	HANDLE	SHARED WITH WADING POOL		
24	1	VACUUM HOSE	SHARED WITH ACTIVITY POOL		
25	1	PORTABLE VACUUM CLEANER SYSTEM	SHARED WITH ACTIVITY POOL		
26	1	911 PHONE	SHARED WITH WADING POOL		

WATER FEATURE EQUIPMENT

MARK	QTY	ITEM	MANUFACTURER	CAT NO.	DESCRIPTION
27	1	WATER FEATURE	VORTEX	VOR-611	BOLLARD ACTIVATOR NO. 3 WATER FEATURE
28	1	WATER FEATURE	VORTEX	VOR-201	SPRAY CANNON WATER FEATURE 10 GPM WITH 1-1/2-IN LINE
29	1	WATER FEATURE	VORTEX	VOR-318	WATER WALL NO. 1 WATER FEATURE 20 GPM WITH 1-1/2-IN LINE
30	1	WATER FEATURE	VORTEX	VOR-7300	AQUALIEN RAINFOREST NO. 1 WATER FEATURE 95 GPM WITH (6) 1-1/2-IN LINE
31	1	WATER FEATURE	VORTEX	VOR-7383	FIVE BELLS NO. 1 WATER FEATURE 25 GPM WITH 1-1/2-IN LINE
32	1	WATER FEATURE	VORTEX	VOR-518	SPRAY LOOPS WATER FEATURE 80 GPM WITH 2-IN LINE
33	1	WATER FEATURE	VORTEX	VOR-7661	WATERBUG NO. 4 WATER FEATURE 65 GPM WITH 2-IN LINE
34	1	WATER FEATURE CONTROL PANEL	VORTEX	SMARTTOUCH CONTROLLER	CONTROL PANEL IN FILTER ROOM MINIMUM NEMA4
35	1	WATER FEATURE CONTROLL PANEL	VORTEX	COMMAND CENTER MANIFOLD	MANIFOLD IN VALVE BOX ON DECK

DECK DATA CHART

DESCRIPTION	AMOUNT/RATE
TOTAL TANK VOLUME - (GALS)	975 GALS
POOL TURNOVER (T.O.R.)	0.2 HRS. AT 80 GPM
FLOW RATE - TANK FILTRATION	80 GPM
FLOW RATE - FEATURE	295 GPM
FLOW RATE - TOTAL FEATURE AND TANK FILTRATION	375 GPM
BATHING LOAD	40 PERSONS
FILTER AREA	9.0 SQFT
FILTER APPLICATION RATE	8.9 GPM PER SQFT

SYMBOL LEGEND

	VALVE
S	SOLENOID VALVE
	CHECK VALVE
	BASKET STRAINER
	ANTI-VORTEX PLATE
	HORIZONTAL PUMPS
	MANUAL MAKEUP WATER
	AUTOMATIC MAKEUP WATER
	MAIN DRAINS
	WALL SKIMMER
	9" x 9" GUTTER DROP BOX
	FLOOR INLET
	FLOW METER
	COMPOUND PRESSURE GAUGE
	VACUUM GAUGE
	PRESSURE GAUGE
	STAND PIPE/FILL FUNNEL
	SITE GLASS
	STAND PIPE
	VERTICAL PUMPS
	WALL INLET
N.C.	NORMALLY CLOSED VALVE

SPRAY DECK CALCULATIONS:
MAIN DRAIN VELOCITY:

BOOSTER:
(2) 12-IN SQUARE MAIN DRAIN - TOTAL OPEN AREA:
2 X 81.30 SQ. IN.(PER MANF.) / 144 = **1.13 SQ. FT.**
TOTAL FLOW:
295 GPM/449 (GPM/(CU. FT./S) = **0.66 CU. FT./S**
TOTAL VELOCITY:
1.13 (CU. FT./S)/0.66 SQ. FT. = **0.58 F.P.S.**

SPRAY DECK PIPING SCHEMATIC

SCALE: NOT TO SCALE

CONSTRUCTION DOCUMENTS
12/11/15

THE ELECTRICAL CONTRACTOR SHALL GROUND AND BOND ALL ELECTRICAL EQUIPMENT, POOL REINFORCING, POOL ACCESSORIES, AND PIPING IN ACCORDANCE WITH NATIONAL ELECTRIC CODE REQUIREMENTS, ARTICLE 680. THE ELECTRICAL CONTRACTOR SHALL OBTAIN A COPY OF ALL APPLICABLE LOCAL STATE ELECTRICAL CODE REGULATIONS.

Weston&Sampson®
273 Dividend Road, Rocky Hill, CT 06067
(860) 513-1473 (800) SAMPSON
www.westonandsampson.com

No.	Date	Dr.By	Ck.By	App.By	Description	
1	03/03/16	SAA	MPM	CBW	ADDENDUM #1	

APPROVED 03/07/16 DATE
REGISTERED PROFESSIONAL ENGINEER

STATE OF CONNECTICUT CHRISTOPHER B. WHITE No. 17475 REGISTERED PROFESSIONAL ENGINEER

TOWN OF GREENWICH – DEPARTMENT OF PUBLIC WORKS
RITCH AVENUE WEST, GREENWICH, CONNECTICUT
BYRAM PARK POOL REPLACEMENT

SPRAY DECK PIPING SCHEMTIC

CADD NO.	SCALE:	CONTRACT:	JOB NO.	DR.BY	DSN.BY	CHK BY	APP BY
GREENWICH	AS NOTED	–	2130336	S.A.A.	M.P.M.	STG	CBW

FILE NO. SP4.2

SHEET – OF –

03/07/2016 09:43:31AM Z:\MA-Boston-Projects\Aquatics\Greenwich, CT- Byram Park Pool\CAD\0-Current_Set\Sheets\SP-4.2 SPRAY DECK PIPING SCHEMATIC.dwg

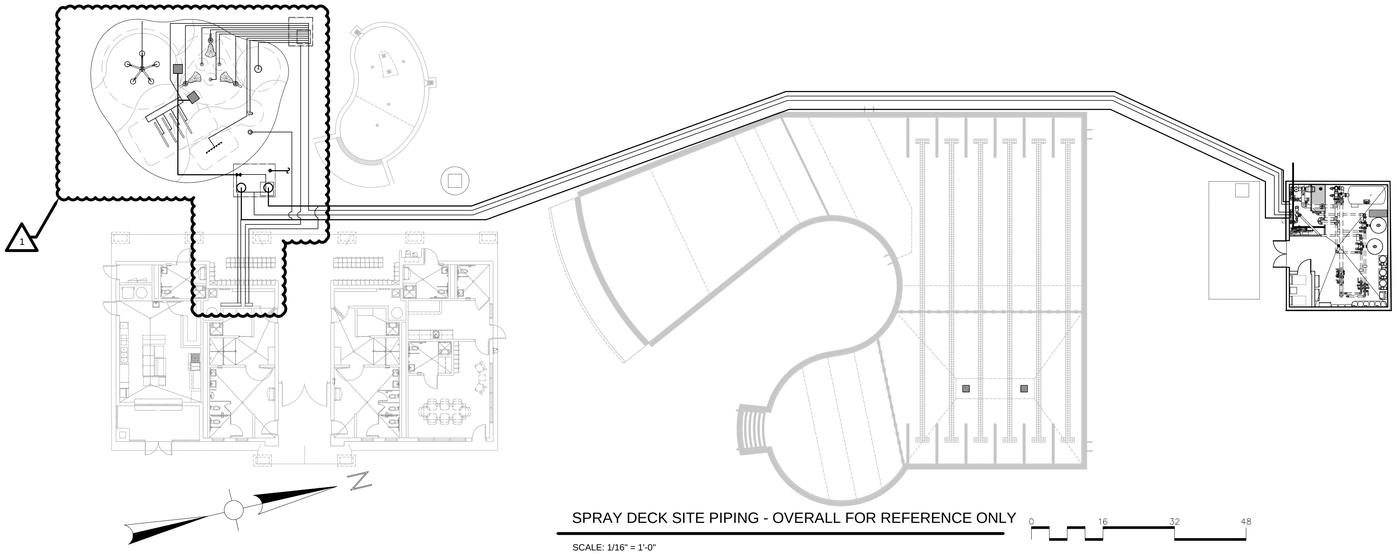

SPRAY DECK SITE PIPING - OVERALL FOR REFERENCE ONLY

SCALE: 1/16" = 1'-0"

0 16 32 48

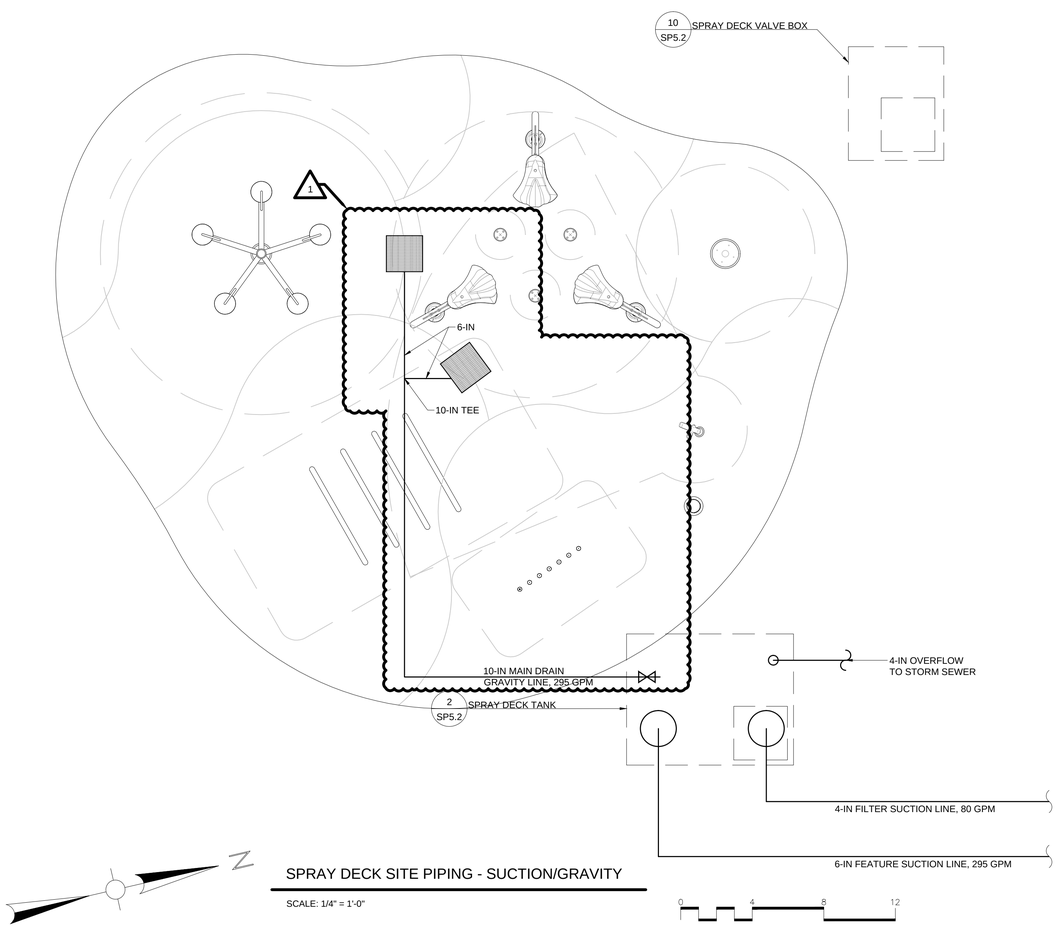

SPRAY DECK SITE PIPING - SUCTION/GRAVITY

SCALE: 1/4" = 1'-0"

0 4 8 12

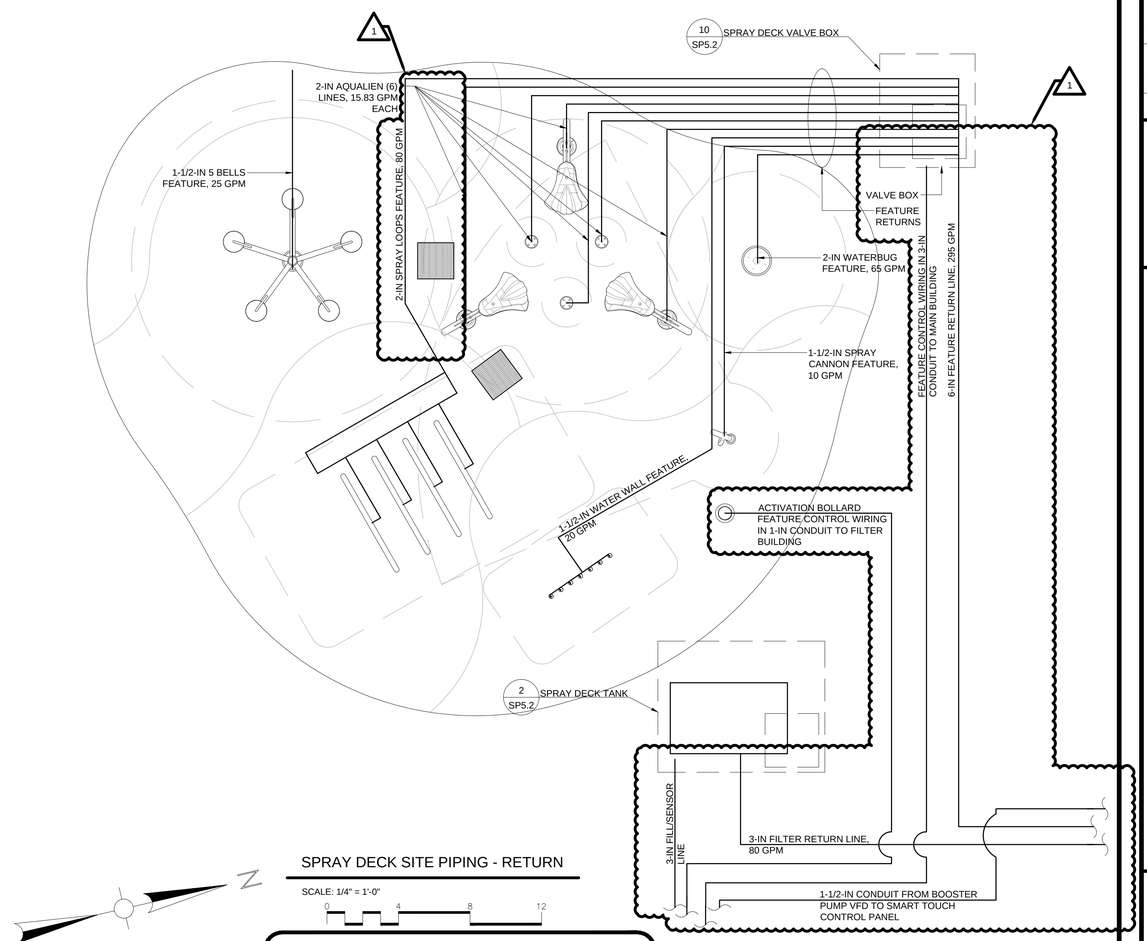

SPRAY DECK SITE PIPING - RETURN

SCALE: 1/4" = 1'-0"

0 4 8 12

CONSTRUCTION DOCUMENTS
12/11/15

THE ELECTRICAL CONTRACTOR SHALL GROUND AND BOND ALL ELECTRICAL EQUIPMENT, POOL REINFORCING, POOL ACCESSORIES, AND PIPING IN ACCORDANCE WITH NATIONAL ELECTRIC CODE REQUIREMENTS, ARTICLE 680. THE ELECTRICAL CONTRACTOR SHALL OBTAIN A COPY OF ALL APPLICABLE LOCAL STATE ELECTRICAL CODE REGULATIONS.

Weston&Sampson®
273 Dividend Road, Rocky Hill, CT 06067
(860) 513-1473 (800) SAMPSON
www.westonandsampson.com

No.	Date	Dr.By	Ck.By	App.By	Description
1	03/03/16	SAA	MPM	CBW	ADDENDUM #1

APPROVED

REGISTERED PROFESSIONAL ENGINEER

03/07/16
DATE

STATE OF CONNECTICUT
CHRISTOPHER B. WHITE
No. 17476
LICENSED PROFESSIONAL ENGINEER

TOWN OF GREENWICH – DEPARTMENT OF PUBLIC WORKS
RITCH AVENUE WEST, GREENWICH, CONNECTICUT
BYRAM PARK POOL REPLACEMENT

SPRAY DECK SITE PIPING

CADD NO.	SCALE:	CONTRACT:	JOB NO.	DR.BY	DSN.BY	CHK.BY	APP.BY
GREENWICH	AS NOTED	–	2130336	S.A.A.	M.P.M.	STG	CBW

FILE NO. SP4.3

SHEET – OF –

03/07/2016 09:44:08AM Z:\MA-Boston-Projects\Aquatics\Greenwich, CT- Byram Park Pool\CAD\0-Current_Set\Sheets\SP-4.3 SPRAY PAD SITE PIPING.dwg

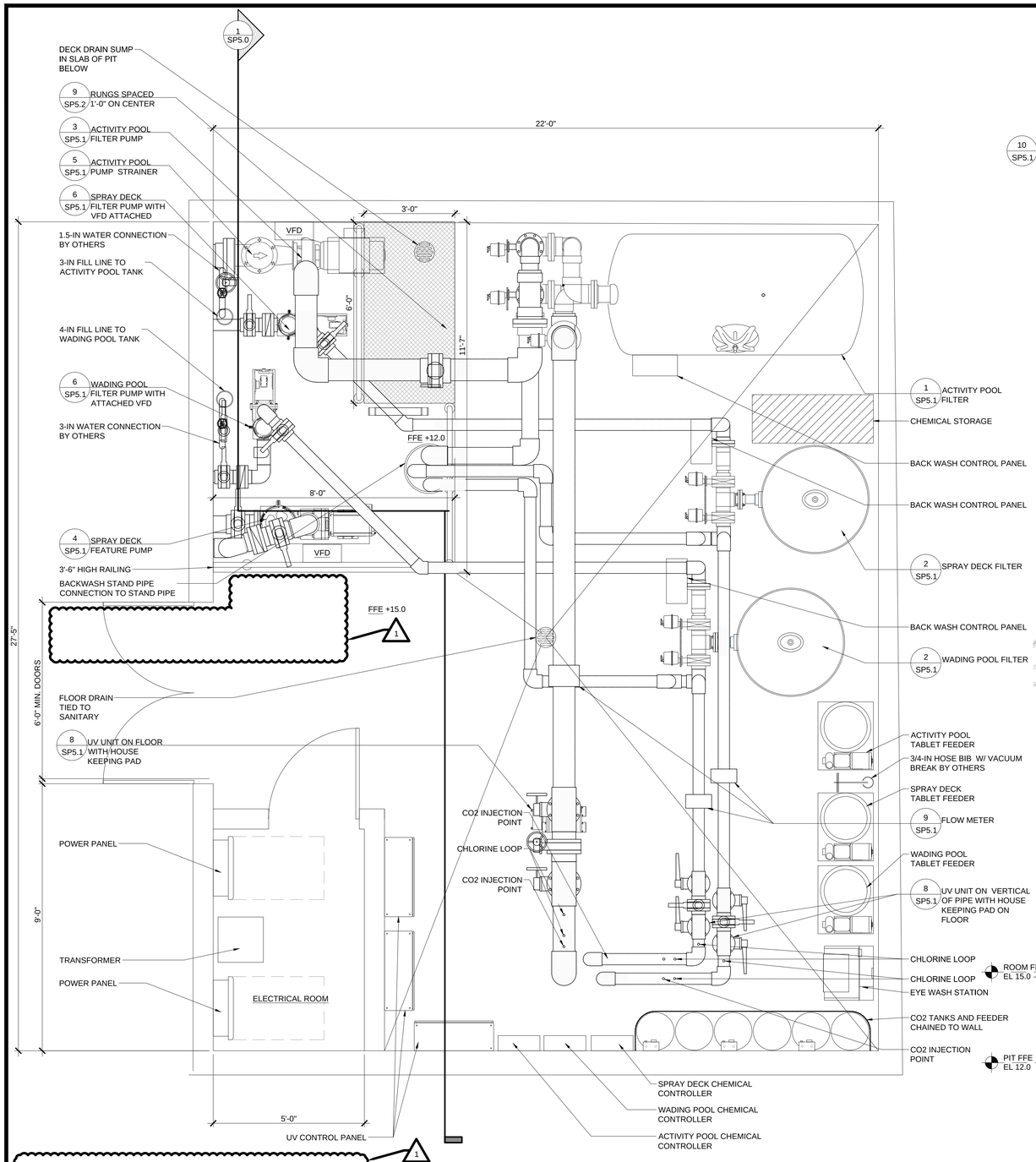

FILTER BUILDING PLAN

SCALE: 1/2" = 1'-0"

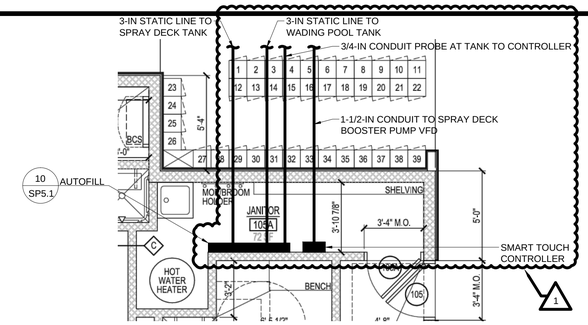

MAIN BUILDING AUTO-FILL LOCATION PLAN

SCALE: 1/4" = 1'-0"

POOL MECHANICAL REQUIREMENTS:

1. THE EQUIPMENT ROOM OR ENCLOSURE SHALL BE LOCKABLE.
2. THE EQUIPMENT ROOM ACCESS SHALL BE CAPABLE OF FITTING ALL EQUIPMENT THAT IS REMOVABLE.
3. EQUIPMENT ROOM FLOOR SHALL BE SMOOTH CONCRETE (SLIP-RESISTANT) AND SLOPED TO A FLOOR DRAIN.
4. EQUIPMENT ROOMS SHALL HAVE FORCED-DRAFT OR CROSS-VENTILATION. REFER TO THE ARCHITECT'S AND MECHANICAL ENGINEER'S DRAWINGS FOR ALL DOOR/WALL LOUVERS AS WELL AS FORCED AIR VENTILATION DETAILS.
5. ALL EXPOSED PVC PIPE SHALL BE TREATED AGAINST U.V. LIGHT.
6. ALL GAUGES SHALL HAVE 2 1/2 -IN DIAL.
7. IN ORDER TO ISOLATE VIBRATION THE FILTER AND FEATURE PUMPS FROM THE FLOOR, THE PUMPS SHALL EACH BE MOUNTED TO A 1/4-INCH THICK STAINLESS STEEL PLATE AND NEOPRENE PADS SHALL BE PLACED BETWEEN THE STAINLESS STEEL PLATE AND THE CONCRETE EQUIPMENT PAD. NEOPRENE PADS SHALL BE EQUIVALENT TO THE MASON INDUSTRIES TYPE SUPER W PADS. THE PADS SHALL BE SIZED TO PROVIDE A MINIMUM OF 0.15-INCH STATIC DEFLECTION UNDER THE WEIGHT OF THE PUMP.
8. TAG ALL VALVES, LABEL ALL PIPES AND POST OPERATING INSTRUCTION INSIDE THE ROOM.
9. CO2 TANKS SHALL BE ANCHORED TO THE WALL WITH CHAINS.
10. ELECTRICALLY OPERATED CHEMICAL FEEDER SHALL BE INTERLOCKED WITH THE FILTER PUMP.
11. THE CHEMICAL SOLUTION TANK SHALL BE LABELED ACCORDING TO THE CONTENTS.
12. SECURE ALL CHEMICAL FEEDER TUBING SO THERE IS NO LOOSE TUBING.
13. SUPPORT ALL PIPING WITH UNISTRUT FRAME FROM EQUIPMENT FLOOR OR ATTACHED TO CEILING AS NEEDED FOR PROPER PIPE SUPPORT OR EQUIVALENT.

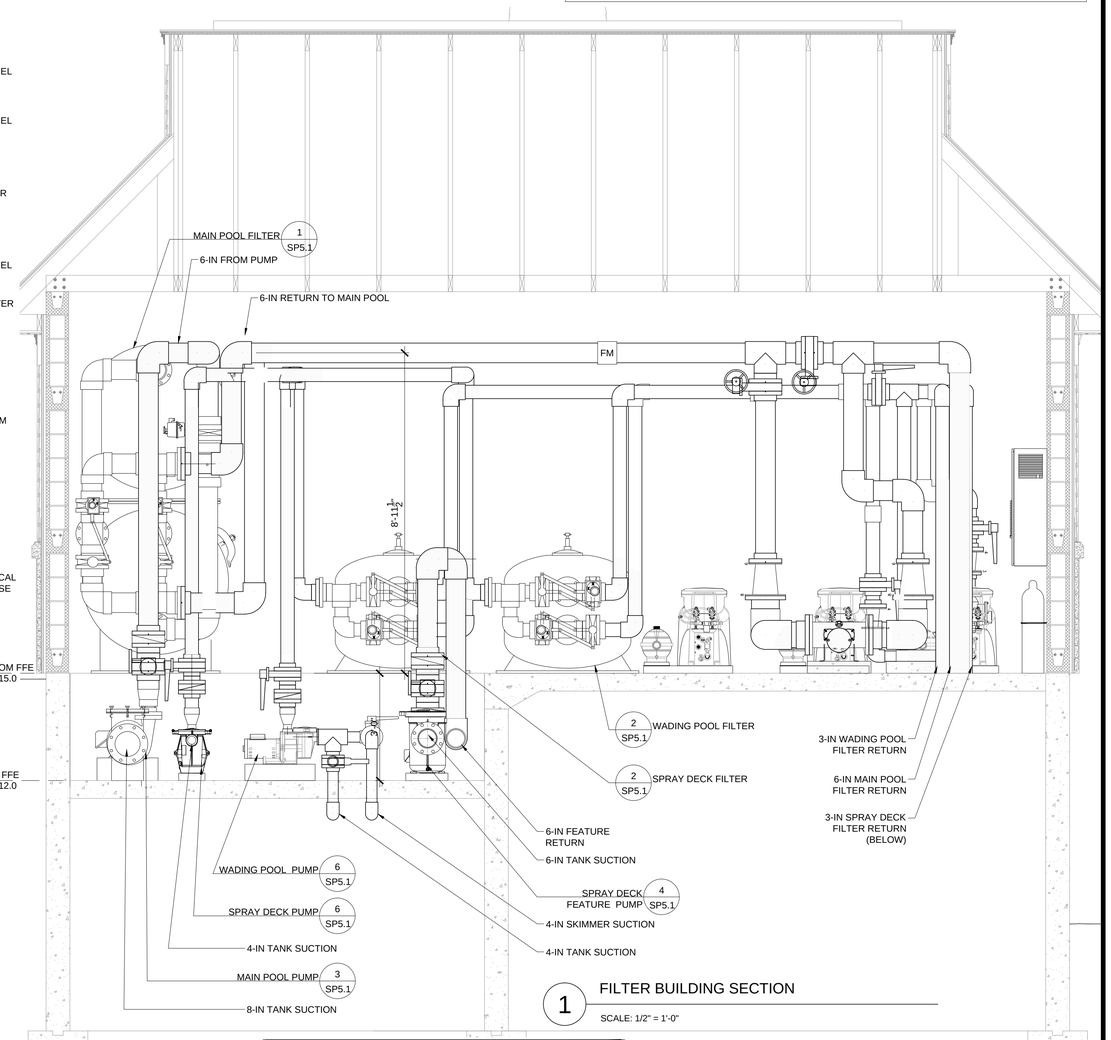

1 FILTER BUILDING SECTION

SCALE: 1/2" = 1'-0"

CONSTRUCTION DOCUMENTS
12/11/15

THE ELECTRICAL CONTRACTOR SHALL GROUND AND BOND ALL ELECTRICAL EQUIPMENT, POOL REINFORCING, POOL ACCESSORIES, AND PIPING IN ACCORDANCE WITH NATIONAL ELECTRIC CODE REQUIREMENTS, ARTICLE 680. THE ELECTRICAL CONTRACTOR SHALL OBTAIN A COPY OF ALL APPLICABLE LOCAL STATE ELECTRICAL CODE REGULATIONS.

Weston&Sampson®
273 Dividend Road, Rocky Hill, CT 06067
(860) 513-1473 (800) SAMPSON
www.westonandsampson.com

No.	Date	Dr.By	Ck.By	App.By	Description
1	03/03/16	SAA	MPM	CBW	ADDENDUM #1

APPROVED
03/07/16
DATE
REGISTERED PROFESSIONAL ENGINEER

STATE OF CONNECTICUT CHRISTOPHER B. WHITE No. 17475 REGISTERED PROFESSIONAL ENGINEER

TOWN OF GREENWICH – DEPARTMENT OF PUBLIC WORKS
RITCH AVENUE WEST, GREENWICH, CONNECTICUT
BYRAM PARK POOL REPLACEMENT

FILTER BUILDING

CADD NO.	SCALE:	CONTRACT:	JOB NO.	DR.BY	DSN.BY	CHK.BY	APP.BY
GREENWICH	AS NOTED	–	2130336	S.A.A.	M.P.M.	STG	CBW

FILE NO. SP5.0

SHEET – OF –

03/07/2016 09:44:45AM Z:\MA-Boston-Projects\Aquatics\Greenwich, CT- Byram Park Pool\CAD\0-Current_Set\Sheets\SP-5.0 MECHANICAL BUILDING.dwg

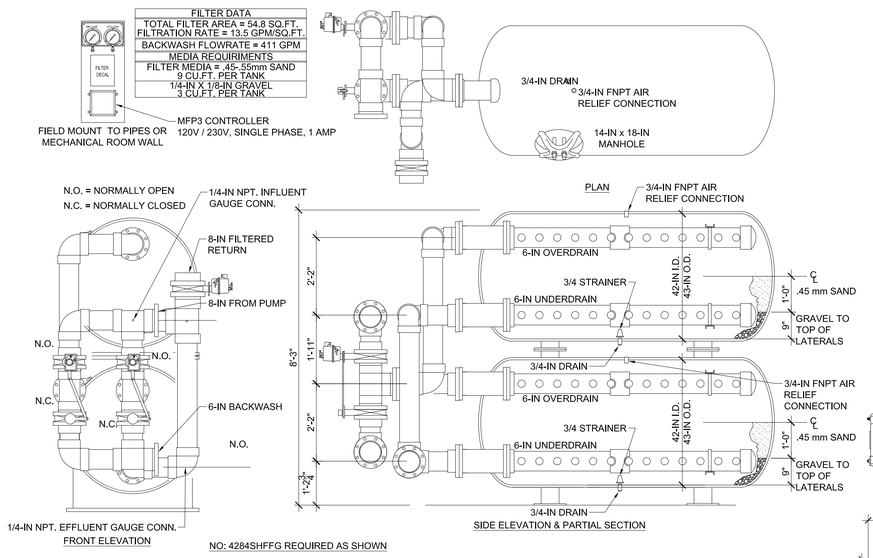

NO: 4284SHFFG REQUIRED AS SHOWN

1 ACTIVITY POOL FILTER

SCALE: 1/2" = 1'-0"

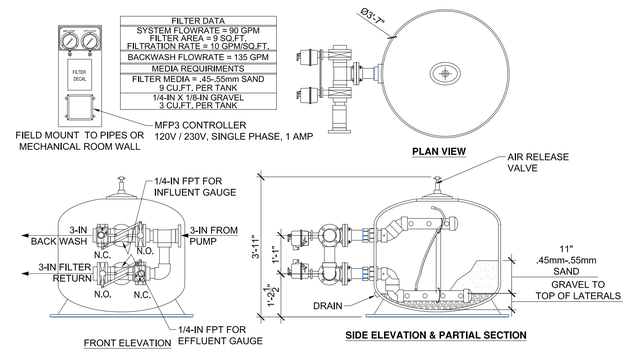

2 SPRAY DECK AND WADING POOL FILTER

SCALE: 1/2" = 1'-0"

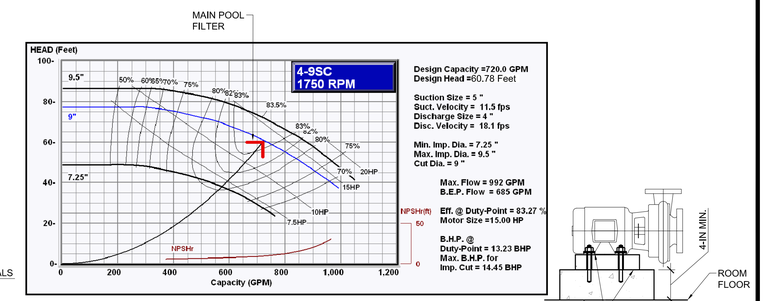

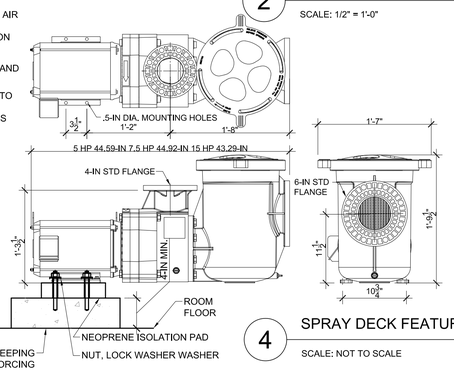

4 SPRAY DECK FEATURE PUMP

SCALE: NOT TO SCALE

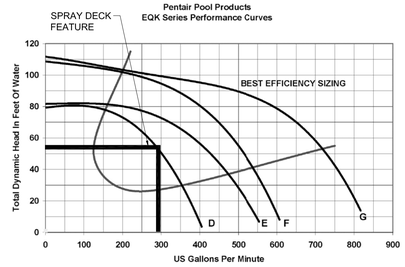

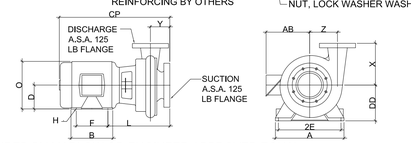

AS MANUFACTURED BY MARLOW OR ENGINEER APPROVED EQUAL

MARLOW MODEL	PHASE	MOTOR FRAME	SPEED	DISCHARGE	SUCTION	A	AB	B	CP	D	2E	F	H	L	O
3-9SC	3	254JP	1750 RPM	4	5	12-1/2	10-3/4	10-3/4	34-3/8	6-1/4	10	8-1/4	17/32	19	13-1/8

3 ACTIVITY POOL FILTER PUMP

SCALE: NOT TO SCALE

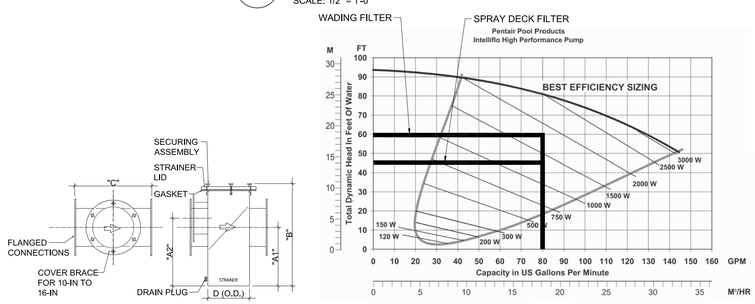

Capacity and Dimension Chart							
Strainer Size	Strainer Part #	SS Basket Prat #		Open Area of Pipe (Sq.In.)	Open Area of Basket (Sq.In.)	Ratio Open Area	
8X5	150NBFG85ER1	NBBSK08EP		50	250	5.0:1	
Dimensions							Approx Weight (lbs.)
Rate	A1	A2	B	C Basket	D	E	
854	12 1/4	13 3/4	26	23 1/2	11 1/4	7 1/2	80

5 STRAINER

SCALE: NOT TO SCALE

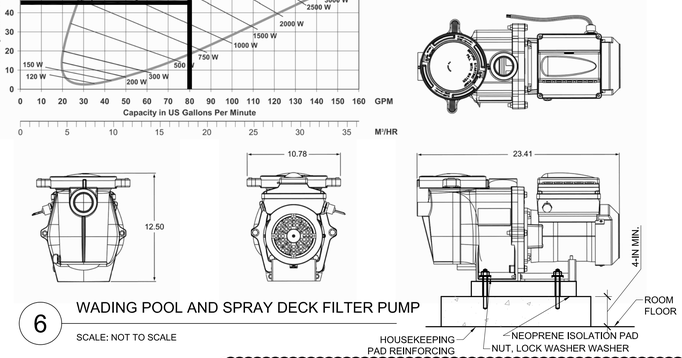

6 WADING POOL AND SPRAY DECK FILTER PUMP

SCALE: NOT TO SCALE

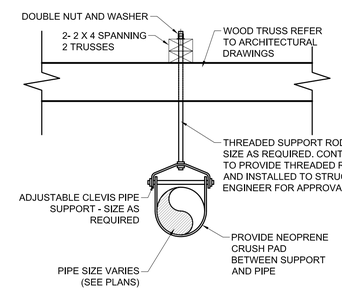

7 PIPE CEILING SUPPORT

SCALE: NOT TO SCALE

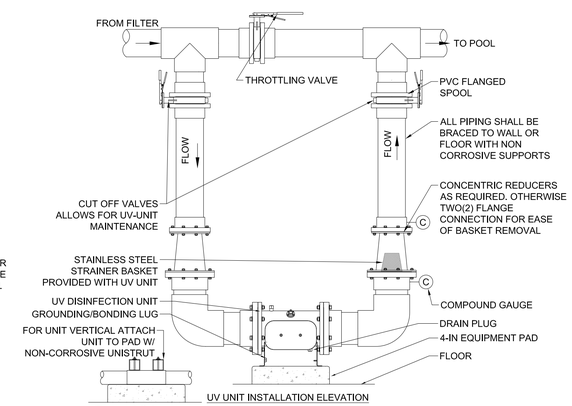

8 UV

SCALE: NOT TO SCALE

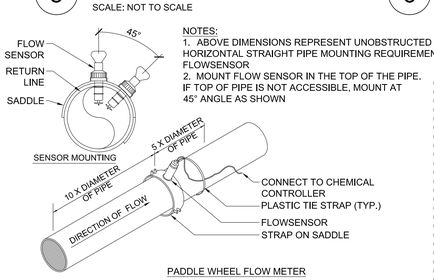

NOTES:
1. ABOVE DIMENSIONS REPRESENT UNOBSTRUCTED HORIZONTAL STRAIGHT PIPE MOUNTING REQUIREMENT FOR FLOWSENSOR
2. MOUNT FLOW SENSOR IN THE TOP OF THE PIPE. IF TOP OF PIPE IS NOT ACCESSIBLE, MOUNT AT 45° ANGLE AS SHOWN

PADDLE WHEEL FLOW METER

FITTINGS	UPSTREAM DISTANCE	DOWNSTREAM DISTANCE
REDUCER	15x I.D.	5x I.D.
90° ELBOW	20x I.D.	5x I.D.
2 x 90° ELBOW	25x I.D.	5x I.D.
2 x 90° ELBOW 3 DIMENSIONS	40x I.D.	5x I.D.
PUMP / VALVE	50x I.D.	5x I.D.

CHART IS FOR HORIZONTAL AND VERTICAL INSTALLATION

9 FLOW METER DETAIL

SCALE: 1/2"=1'-0"

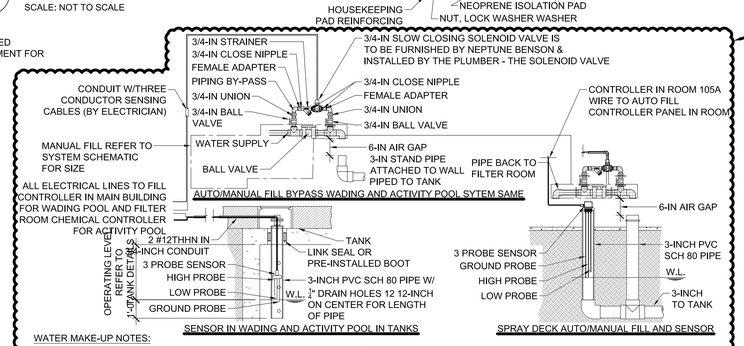

WATER MAKE-UP NOTES:
1. WATER MAKE-UP SUPPLIER TO PROVIDE CONTROL BOX AND RELAY, SOLENOID VALVE, ELECTRODE UNIT, SENSING WELL PROBES, AND PROBE HANGING WIRE.
2. POOL CONTRACTOR TO INSTALL SENSING WELL AND SET PROBES.
3. ELECTRICIAN TO MOUNT CONTROL BOX AND RELAY, SUPPLY AND INSTALL ALL CONDUIT AND CONDUCTORS FOR SYSTEM INTERCONNECTION, AND MAKE ALL NECESSARY ELECTRICAL CONNECTIONS.
4. THE PLUMBER IS TO INSTALL THE SOLENOID VALVE AND PROVIDE ALL THE BYPASS PIPE AND FITTINGS UNLESS OTHERWISE NOTED.

10 TYPICAL POOL AUTOFILL

SCALE: 1/4"=1'-0"

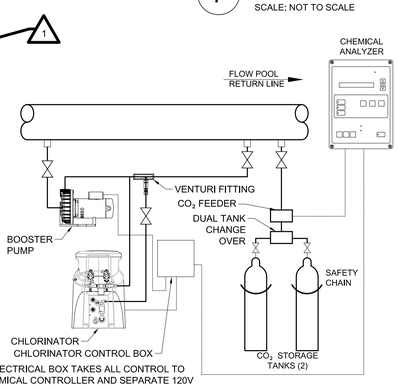

ELECTRICAL BOX TAKES ALL CONTROL TO CHEMICAL CONTROLLER AND SEPARATE 120V 20 AMP CIRCUIT FOR SYSTEM POWER

11 CHEMICAL SYSTEM DETAIL

SCALE: NOT TO SCALE

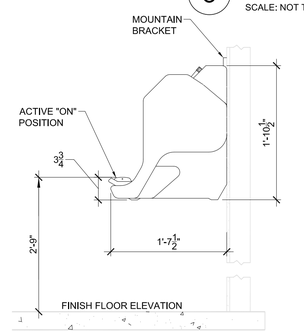

12 EYE WASH STATION

SCALE: NOT TO SCALE

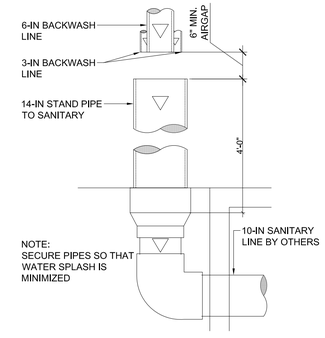

13 BACKWASH STAND PIPE

SCALE: NOT TO SCALE

CONSTRUCTION DOCUMENTS
12/11/15

THE ELECTRICAL CONTRACTOR SHALL GROUND AND BOND ALL ELECTRICAL EQUIPMENT, POOL REINFORCING, POOL ACCESSORIES, AND PIPING IN ACCORDANCE WITH NATIONAL ELECTRIC CODE REQUIREMENTS, ARTICLE 680. THE ELECTRICAL CONTRACTOR SHALL OBTAIN A COPY OF ALL APPLICABLE LOCAL STATE ELECTRICAL CODE REGULATIONS.

Weston&Sampson®
273 Dividend Road, Rocky Hill, CT 06067
(860) 513-1473 (800) SAMPSON
www.westonandsampson.com

No.	Date	Dr.By	Ck.By	App.By	CBW	ADDENDUM #	Description	DATE
1	03/03/16	SAA	MPM	CBW			APPROVED	03/07/16

REGISTERED PROFESSIONAL ENGINEER

TOWN OF GREENWICH – DEPARTMENT OF PUBLIC WORKS
RITCH AVENUE WEST, GREENWICH, CONNECTICUT
BYRAM PARK POOL REPLACEMENT

MECHANICAL DETAILS

SCALE:	CONTRACT:	JOB NO.	DR.BY	DSN.BY	CHK.BY	APP.BY
AS NOTED	–	2130336	S.A.A.	M.P.M.	STG	CBW

CADD NO. GREENWICH

FILE NO. SP5.1

SHEET – OF –

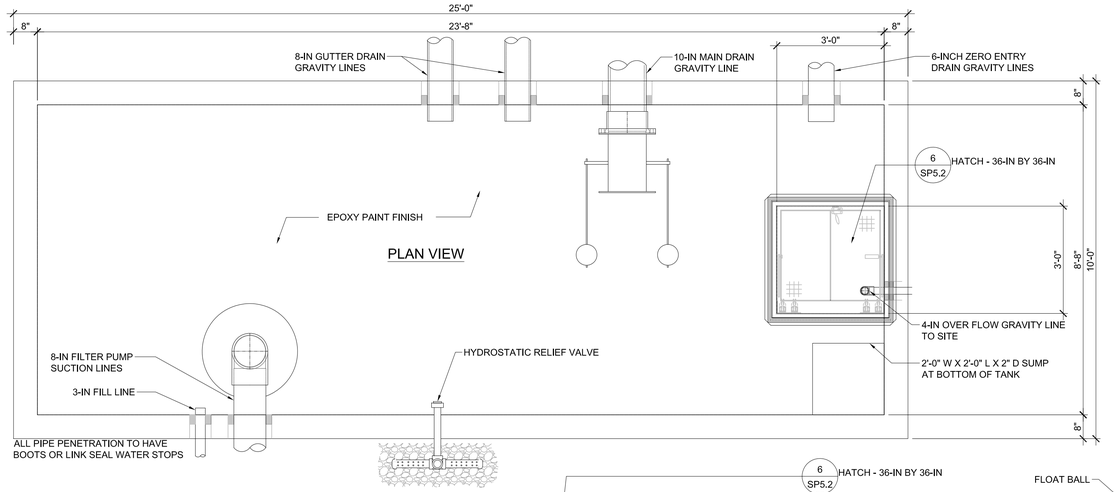

PLAN VIEW

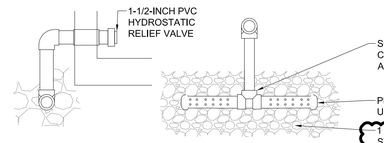

HYDROSTATIC RELIEF VALVE DETAIL

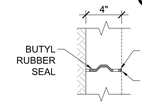

TANK CAULKING DETAIL

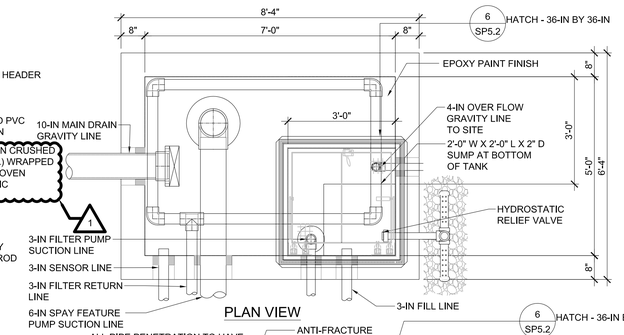

PLAN VIEW

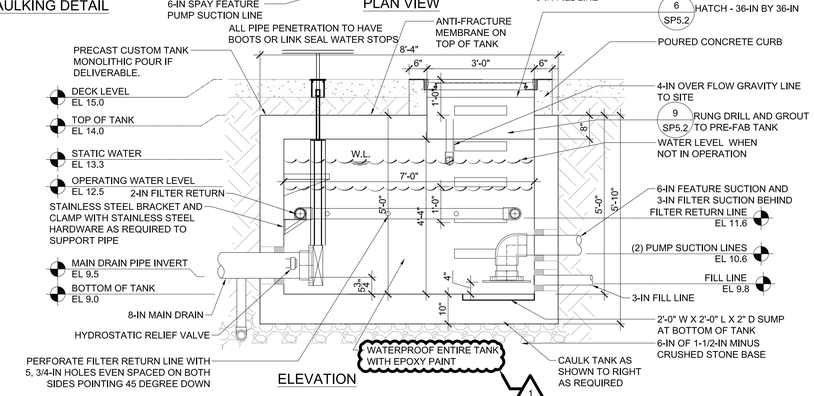

ELEVATION

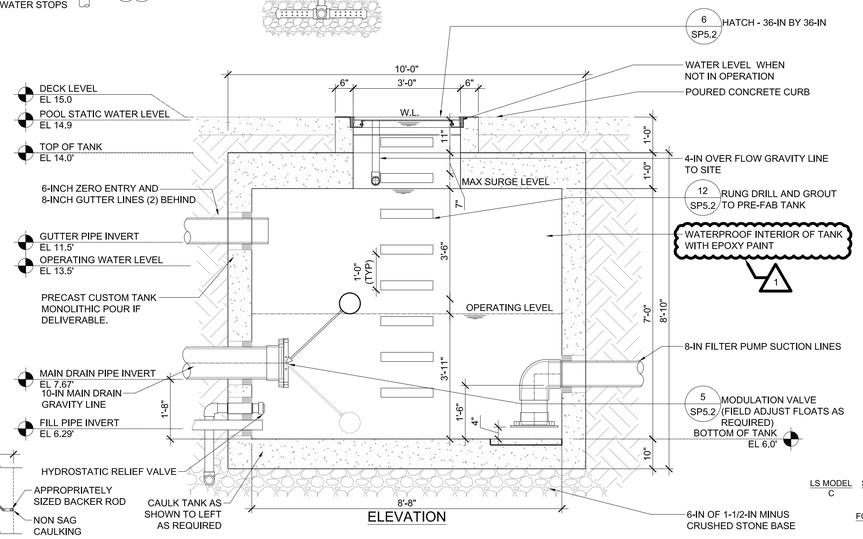

ELEVATION

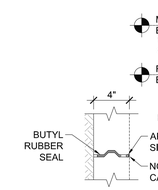

TANK CAULKING DETAIL

1 ACTIVITY POOL TANK

SCALE: NOT TO SCALE

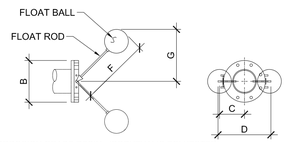

CORROSION GRADE RESIN - ISOPHTHALIC POLYESTER METALLIC PARTS ARE STAINLESS STEEL, FLOAT BALL SHALL BE POLYETHYLENE, FLANGES SHALL CONFORM TO STANDARD ANSI 150 LB, DRILL PATTERNS.

DIMENSION (INCHES)					
I.D.	B	C	D	F	G
10	16	12	25-1/2	35	25
4	9	8-1/2	18-1/2	29	21

4 MODULATION VALVE

SCALE: NOT TO SCALE

LINK-SEAL MODULAR SEALS WITH CORE DRILLED WALL OPENING MANUFACTURED BY PIPELINE SEAL & INSULATOR, INC.
TEL: 800-423-2410 E-MAIL: INFO@PSIPSI.COM

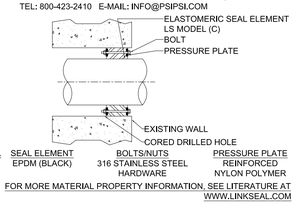

FOR MORE MATERIAL PROPERTY INFORMATION, SEE LITERATURE AT WWW.LINKSEAL.COM

5 LINK SEAL/PENETRATION SEAL

SCALE: NOT TO SCALE

PLASTIC PIPE WITH SAME OUTSIDE DIAMETER (IPS)				
PIPE SIZE (Nom.)	ACTUAL O.D. (Inches)	CORE BIT DRILLED HOLE		
		HOLE I.D.	LINK-SEAL SIZE	LINKS PER SEAL
2	2.375	4.000	LS-300-C	6
2-1/2	2.875	5.000	LS-300-C	8
3	3.500	6.000	LS-315-C	10
4	4.500	6.000	LS-300-C	10
5	5.563	8.000	LS-340-C	13
6	6.625	10.000	LS-475-C	10
8	8.625	12.000	LS-475-C	12
10	10.750	14.000	LS-475-C	14
12	12.750	16.000	LS-475-C	17
14	14.000	18.000	LS-575-C	16

2 SPRAY DECK TANK

SCALE: NOT TO SCALE

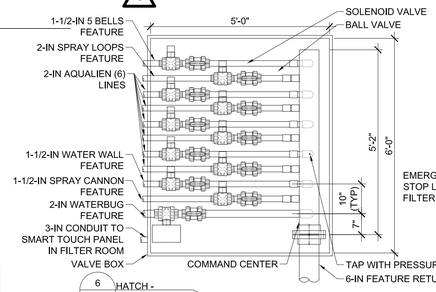

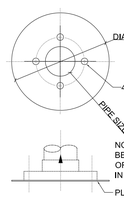

NOTE: WHEN PUMP SUCTION IS BELOW PLATE THROUGH SLAB ORDER PLATE WITHOUT HOLE IN CENTER FOR SUCTION POINT

DIMESIONS			PART #
PIPE SIZE	PLATE DIA.	BOLT SIZE	PVC PLATE
2-1/2-IN	9-IN	5/8-IN	AVPLATE25PVCKIT
3-IN	9-IN	5/8-IN	AVPLATE3PVCKIT
6-IN	16-IN	3/4-IN	AVPLATE6PVCKIT
8-IN	18-IN	3/4-IN	AVPLATE16PVCKIT

NOTE: PLATE DIA./HEIGHT MAY VARY DEPENDING ON REQUIRED SUCTION FLOW.

7 ANTI-VORTEX PLATE

SCALE: NOT TO SCALE

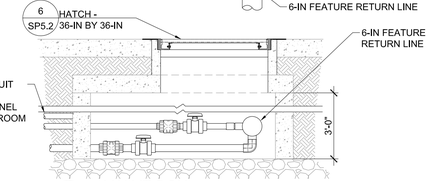

10 VALVE BOX

SCALE: NOT TO SCALE

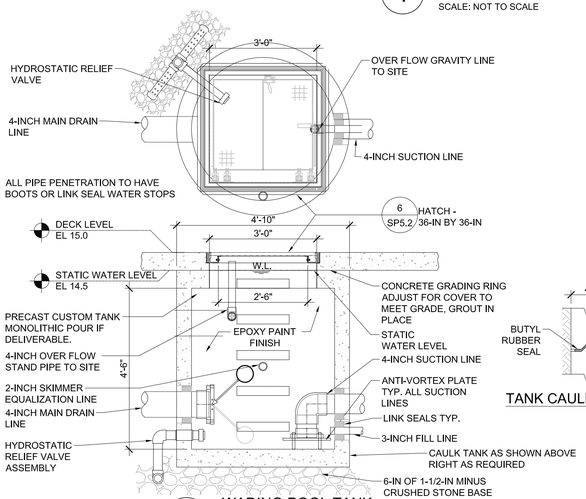

3 WADING POOL TANK

SCALE: NOT TO SCALE

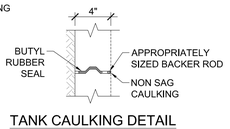

TANK CAULKING DETAIL

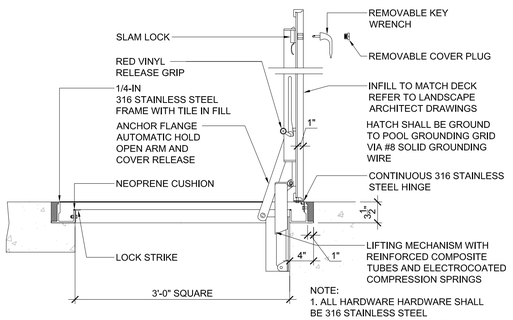

NOTE:
1. ALL HARDWARE HARDWARE SHALL BE 316 STAINLESS STEEL
2. FRAME SHALL BE MILL FINISH ALUMINUM WITH BITUMINOUS COATING

6 TANK HATCH TYPICAL

SCALE: NOT TO SCALE

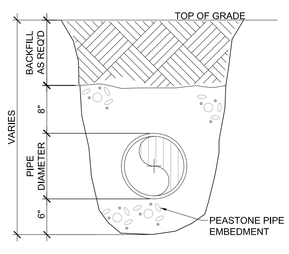

8 BURIED PIPE

SCALE: NOT TO SCALE

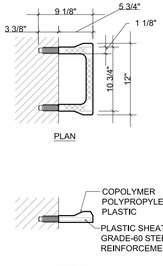

9 LADDER RUNG

SCALE: NOT TO SCALE

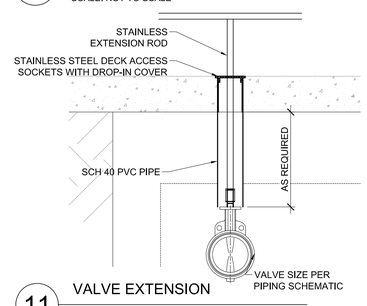

11 VALVE EXTENSION

SCALE: NOT TO SCALE

CONSTRUCTION DOCUMENTS
12/11/15

THE ELECTRICAL CONTRACTOR SHALL GROUND AND BOND ALL ELECTRICAL EQUIPMENT, POOL REINFORCING, POOL ACCESSORIES, AND PIPING IN ACCORDANCE WITH NATIONAL ELECTRIC CODE REQUIREMENTS, ARTICLE 680. THE ELECTRICAL CONTRACTOR SHALL OBTAIN A COPY OF ALL APPLICABLE LOCAL STATE ELECTRICAL CODE REGULATIONS.

Weston&Sampson®
273 Dividend Road, Rocky Hill, CT 06067
(860) 513-1473 (800) SAMPSON
www.westonandsampson.com

No.	Date	Dr.By	Ck.By	App.By	Description	ADDENDUM #1
1	03/03/16	SAA	M.P.M.	CBW	APPROVED	

03/07/16
DATE

STATE OF CONNECTICUT
No. 17475
REGISTERED PROFESSIONAL ENGINEER

TOWN OF GREENWICH – DEPARTMENT OF PUBLIC WORKS
RITCH AVENUE WEST, GREENWICH, CONNECTICUT
BYRAM PARK POOL REPLACEMENT

MECHANICAL DETAILS 2

CADD NO.	SCALE:	CONTRACT:	JOB NO.	DR.BY	DSN.BY	CHK.BY	APP.BY
GREENWICH	AS NOTED	–	21303.36	S.A.A.	M.P.M.	STG	CBW

FILE NO. SP5.2

SHEET – OF –

03/07/2016 10:03:52AM Z:\MA-Boston-Projects\Aquatics\Greenwich, CT- Byram Park Pool\CAD\0-Current_Set\Sheets\SP-5.2 MECHANICAL ROOM DETAILS 2.dwg

SECTION 02088

POLYVINYL CHLORIDE PRESSURE PIPE

PART 1 - GENERAL

1.01 WORK INCLUDED:

This section covers the furnishing, handling, hauling, laying, jointing, testing, and disinfecting of all polyvinyl chloride (PVC) pressure pipe, fittings, and appurtenant work as indicated on the drawings and as specified herein.

1.02 RELATED WORK:

A. Section 02300, EARTHWORK

B. Section 02252, SUPPORT OF EXCAVATION

C. Section 02631, PRECAST MANHOLES AND CATCH BASINS

D. Section 02518, TRACER TAPE

1.03 QUALITY ASSURANCE:

A. All pipe and fittings shall be inspected and tested at the factory as required by the standard specifications to which the material is manufactured. The Contractor shall furnish in duplicate to the Engineer sworn certificates of such tests.

B. In addition, the Owner reserves the right to have any or all pipe, fittings, and special castings inspected and/or tested by an independent service at either the manufacturer's plant or elsewhere. Such inspection and/or tests shall be at the Owner's expense.

1.04 REFERENCES:

A. The following standards form a part of this specification as referenced:

American Water Works Association (AWWA)

AWWA	C110	Ductile-Iron and Gray-Iron Fittings, 3- In. through 48-In., for Water and Other Liquids
AWWA	C153	Ductile-Iron Compact Fittings, 3 In. through 16 In., for Water and Other Liquids
AWWA	C600	Installation of Ductile-Iron Water Mains and Their Appurtenances

AWWA	C651	Disinfecting Water Mains
AWWA	C900	Polyvinyl Chloride (PVC) Pressure Pipe, 4-In. through 12-In., for Water Distribution
AWWA	C905	Polyvinyl Chloride (PVC) Water Transmission Pipe, Nominal Diameters 14 In. through 36 In.
AWWA	C907	Polyvinyl Chloride (PVC) Pressure Fittings for Water (4 In. through 8 In.)

American Society for Testing and Materials (ASTM)

ASTM	D1784	Specification for Rigid Polyvinyl Chloride (PVC) Compounds and Chlorinated Polyvinyl Chloride (CPVC) Compounds
ASTM	D2241	Specification for Polyvinyl Chloride (PVC) Pressure-Rated Pipe (SDR-Series)
ASTM	D2321	Recommended Practice for Underground Installation of Flexible Thermoplastic Sewer Pipe
ASTM	D3139	Specification for Joints for Plastic Pressure Pipes Using Flexible Elastomeric Seals
ASTM	F477	Specification for Elastomeric Seals (Gaskets) for Joining Plastic Pipe

1.05 SUBMITTALS: IN ACCORDANCE WITH REQUIREMENTS OF GENERAL SPECIFICATIONS, SUBMIT THE FOLLOWING:

Shop drawings shall consist of manufacturer's scale drawings, cut, or catalogs including descriptive literature and complete characteristics and specifications, and code requirements. Shop drawings shall be submitted for the PVC pressure pipe, type of joints, fittings, and couplings in accordance with specifications.

PART 2 - PRODUCTS

2.01 PIPE:

A. PVC pressure pipe from 1 1/2-inch through 3-inch shall be designed and manufactured in accordance with ASTM D2241; 4-inch through 12-inch to AWWA C900; and 14-inch through 36-inch to AWWA C905, using materials which conform to ASTM D1784.

B. Unless otherwise indicated or specified, PVC pressure pipe from 1 1/2-inch through 3-inch shall be pressure class 160 (SDR 26) and from 4-inch through 12-inch shall be pressure class 100 (DR25).

C. Pipe shall be homogeneous throughout; free from voids, cracks, inclusions, and other defects; as uniform as commercially practicable in color, density, and other physical properties.

D. Pipe surfaces shall be free from nicks, scratches, and other blemishes. The joining surfaces of pipe spigots and of integral-bell and sleeve-reinforced bell sockets shall be free from gouges and other imperfections that might cause leakage at joints.

2.02 JOINTS:

A. Push-on joints for PVC pressure pipe shall conform to ASTM D3139 and F477.

B. Where so indicated, pipe and fittings shall be furnished with approved thrust restraining appurtenances to keep the piping from pulling apart under pressure.

2.03 FITTINGS:

A. PVC fittings shall be used for pipe sizes 1-1/2-inch through 3-inch.

B. PVC fittings, conforming to AWWA C907 shall be used for pipe sizes 4-inch through 8-inch.

C. Ductile iron compact fittings, conforming to AWWA C153 shall be used for pipe sizes 10-inch through 16-inch.

D. Ductile - iron standard fittings conforming to AWWA C110 shall be used for pipe sizes 18-inch through 36-inch.

E. Pressure classification of fittings shall be at least equal to that of the pipe with which they are used.

F. Gaskets shall be of a composition suitable for exposure to the liquid within the pipe.

G. Unless otherwise indicated, ductile iron fittings shall have all bell mechanical joint ends, and PVC fittings shall have all bell ends conforming to ASTM D3139.

2.04 FLEXIBLE COUPLINGS:

A. To ensure correct fitting of pipe and couplings, all sleeve-type couplings and accessories shall be furnished by the supplier of the pipe and shall be of a pressure rating at least equal to that of the pipeline in which they are to be installed. Sleeve-type couplings shall be made by Dresser Mfg. Div., Bradford, PA; Rockwell International, Pittsburgh, PA; Clow Corporation, Rochester, NY; or be an approved equal.

B. Couplings for buried pipe shall be of cast iron and shall be Dresser Style 38 or 153, Rockwell Type 441, Clow Type F-1208, or approved equal products. Couplings shall be provided with galvanized steel bolts and nuts.

C. All couplings shall be furnished with the pipe stop removed.

D. Couplings shall be provided with gaskets of a composition suitable for exposure to the liquid within the pipe.

PART 3 - EXECUTION

3.01 INSPECTION BEFORE INSTALLATION:

Pipes and fittings shall be subjected to a careful inspection and a hammer test just before being laid or installed.

3.02 HANDLING AND CUTTING:

A. Every care shall be taken in handling and laying pipe and fittings to avoid damaging the pipe, and scratching or marring surfaces.

B. Any fitting or pipe showing a crack or which has received a severe blow that may have caused an incipient fracture, even though no such fracture can be seen, shall be marked as rejected and removed at once from the work site.

C. In any pipe showing a distinct crack and in which it is believed there is no incipient fracture beyond the limits of the visible crack, the cracked portions, if so approved, may be cut off by and at the expense of the Contractor before the pipe is laid so that the pipe used will be perfectly sound. The cut shall be made in the sound barrel at a point at least 12-inches from the visible limits of the crack.

D. All cutting of pipe shall be done with a machine suitable for cutting PVC pipes. Cut ends shall be beveled when recommended by the pipe manufacturer.

3.03 INSTALLATION:

A. Pipe and Fittings

1. No defective pipe or fittings shall be laid or placed in the piping, and any piece discovered to be defective after having been laid or placed shall be removed and replaced by a sound and satisfactory piece.

2. Each pipe and fitting shall be cleared of all debris, dirt, etc., before being laid and shall be kept clean until accepted in the complete work.

3. Pipe and fittings shall be laid accurately to the lines and grades indicated on the drawings or as required. Care shall be taken to ensure good alignment both horizontally and vertically.

4. In buried pipelines, each pipe shall have firm bearing along its entire length.

5. If the pipe is to be installed in a curvilinear configuration using pipe bending, or pipe must have slight changes in direction using joint deflection, the Contractor is to follow the installation guide provided by the manufacturer. Under no circumstances shall the pipe be curved or the joints offset more than the maximum limits provided by the manufacturer.

6. Pipe shall be installed underground in a manner that will ensure that external loads will not subsequently cause a decrease of more than 5 percent in the vertical cross-section dimension (deflection). When installing the pipes, they shall be rotated 180 degrees so that the upper quadrant of the pipe that was exposed to direct sunlight will not be backfilled upon.

7. At all times when pipe laying is not actually in progress, the open ends of pipe shall be closed by temporary water-tight plugs or by other approved means. If water is in the trench when work is resumed, the plug shall not be removed until all danger of water entering the pipe has passed.

8. Assembling of fittings with mechanical joint ends shall conform to AWWA C600, Section 9B and all amendments thereto.

9. If effective sealing of the mechanical joint is not attained at the maximum allowable torque, the joint shall be disassembled and thoroughly cleaned, then reassembled. Bolts shall not be overstressed to tighten a leaking joint. The correct torque as indicated by a torque wrench shall not exceed manufacturer's recommendations.

10. When PVC pipe is to be drilled and tapped, it shall be done in accordance with the manufacturer's recommendations. Only sharp cutting tools shall be used and the tool shall be lubricated during drilling to avoid a build-up of excess heat locally in the pipe.

3.04 TESTING:

A. Prior to the pressure and leakage tests, the piping shall be thoroughly cleaned of all dirt, dust, oil, grease, and other foreign material. This work shall be done with care to avoid damage to the pipe.

B. Pressure and Leakage Tests

1. Unless otherwise approved, all pipelines shall be given combined pressure and leakage tests between line valves. The Contractor shall furnish and install

suitable temporary testing plugs or caps; all necessary pressure pumps, pipe connections, meters, gates, and other necessary equipment; and all labor required. The Owner and Engineer shall have the privilege of using their own gages.

2. Subject to approval and provided that the tests are made within a reasonable time considering the progress of the project as a whole, and the need to put the section into service, the Contractor may make the tests when he desires. However, pipelines in excavations or embedded in concrete shall be tested prior to backfilling of the excavation or placing of the concrete, and exposed piping shall be tested prior to field painting.

3. Unless it has already been done, the section of pipe to be tested shall be filled with water and all air shall be expelled from the pipe. The Contractor shall follow established procedures for filling the pipe and expelling trapped air to avoid exposing the piping system to water hammer. If blowoffs are not available at high points for releasing air, the Contractor shall make the necessary excavations and install the necessary taps. If required by the Engineer, it shall plug the holes after completion of the test and backfill as necessary.

4. The section under test shall be maintained full of water for a period of 24 hours prior to the combined pressure and leakage test being applied.

5. The pressure test shall consist of first raising the water pressure (based on the elevation of the lowest point of the section under test corrected to the gage location) to the pressure rating of the pipe. If the Contractor cannot achieve the specified pressure and maintain it for a period of one hour, the section shall be considered as having failed to pass the pressure test.

6. If the pressure test fails, the Contractor shall make a leakage test by metering the flow of water into the pipe while maintaining the specified pressure in the section being tested. If the average leakage during a two-hour period exceeds 11.6 gallons per day, per inch of diameter, per mile of pipe, the section shall be considered as having failed the leakage test. For example, if 1,000 feet of 4-inch pipe is to be tested, the allowable leakage is 0.73 gallons over a 2-hour period, calculated as follows:

$$L = \frac{(11.6\text{ gal}) \times (4'') \times (2\text{ hr.}) \times (1000')}{(1'') \times (24\text{ hr.}) \times (5280')} = 0.73\text{ gal}$$

7. If the section fails to pass the pressure and leakage test, the Contractor shall do everything necessary to locate, uncover, and repair or replace the defective pipe, fitting, or joint, all at its own expense and without extension of time for completion of the work. Additional tests and repairs shall be made until the section passes the specified test.

C. Disinfection and Flushing

1. The Contractor shall disinfect the lines carrying potable water.

2. The Contractor shall furnish all equipment and materials necessary to do the work of disinfecting, and shall perform the work in accordance with the procedure outlined in AWWA C651 and all amendments thereto.

3. In general, the procedure of disinfecting the main shall be to apply the chlorine through a tap in one end of the section and bleed it off through a tap at the other end.

4. The applied dosage shall be such as to produce a chlorine concentration of not less than 10 mg/l after a contact time of not less than 24 hours.

5. During the disinfection period, care shall be exercised to prevent contamination of water in existing mains.

6. Any temporary connection to the mains or other facilities required to accomplish the disinfection of the mains shall be at the Contractor's expense.

7. After treatment, the main shall be flushed with clean water until the residual chlorine concentration is less than 0.2 mg/l.

8. Before disposing of the water used in disinfecting and flushing water mains the Contractor shall thoroughly neutralize it through the application of a reducing agent, as referenced in AWWA C651.

9. Bacteriological sampling and testing shall be done in accordance with AWWA C651 for each main and each branch. Sampling shall be accomplished with sterile bottles treated with sodium thiosulfate, as required by Standard Methods. No hose or fire hydrants shall be used in collection of samples. A corporation stop installed on the main, with a removable copper tube gooseneck assembly, is the recommended method.

10. Testing shall be done by a laboratory approved by the Engineer, in accordance with Standard Methods, and shall confirm the absence of coliform organisms. A standard plate count may be required at the option of the Engineer.

END OF SECTION

SECTION 02831

SEGMENTAL RETAINING WALL SYSTEM

PART 1 - GENERAL

1.01 WORK INCLUDED:

A. Work shall consist of designing, furnishing all materials, labor, equipment, and installation of the segmental retaining wall system in accordance with these specifications and to the lines, grades, and dimensions shown on the plans.

1.02 RELATED WORK:

A. Section 01330, SUBMITTALS

B. Section 02300, EARTHWORK

1.03 REFERENCE STANDARDS:

A. Connecticut Department of Transportation Standard Specification for Highways and Bridges (Form 816).

B. Segmental Retaining Wall Units

1. ASTM C 1372 - Standard Specification for Segmental Retaining Wall Units
2. ASTM C 140 - Standard Test Methods of Sampling and Testing Concrete Masonry Units

C. Geosynthetic Reinforcement

1. ASTM D 4595 - Tensile Properties of Geotextiles by the Wide-Width Strip Method
2. ASTM D 5262 - Test Method for Evaluating the Unconfined Creep Behavior of Geosynthetics
3. GRI:GG1 - Single Rib Geogrid Tensile Strength
4. GRI:GG5 - Geogrid Pullout

D. Soils

1. ASTM D 698 - Moisture Density Relationship for Soils, Standard Method
2. ASTM D 422 - Gradation of Soils
3. ASTM D 424 - Atterberg Limits of Soil

E. Drainage Pipe

1. ASTM D 3034 - Specification for Polyvinyl Chloride (PVC) Plastic Pipe
2. ASTM D 1248 - Specification for Corrugated Plastic Pipe

F. Engineering Design

1. "NCMA Design Manual for Segmental Retaining Walls", Latest Edition

G. Where specifications and reference documents conflict, the Engineer shall make the final determination of applicable document.

1.04 DESIGN CRITERIA:

A. Precast sections shall be designed to withstand earth loads due to soil plus live loads due to vehicular traffic (HS-20 loading). Design and construction of each section shall meet the requirements of ACI 318 and the AASHTO Load Factor.

B. Should the actual soil conditions observed during construction differ from those assumed for the design, design shall be reviewed by the manufacturer's Wall Design Engineer at the Engineer's direction.

C. The design for the final retaining wall plans shall be prepared and sealed by a professional Civil Engineer licensed in the State of Connecticut. The design analysis shall consider the external stability against sliding and overturning, internal stability, facial stability of the reinforced soil mass, and external global stability and shall be in accordance with acceptable engineering practice and these specifications. The internal and external stability analysis shall be performed in accordance with the "NCMA Design Manual for Segmental Retaining Walls", using the recommended minimum factors of safety in this manual.

D. The design of the geosynthetic reinforcement shall take into consideration the effects from obstructions.

E. Minimum embedment: the minimum wall embedment shall be the greater of 0.5 feet or the following:

Level Slope in Front	H'/20
3H:1V Slope in Front	H'/10
2H:1V Slope in Front	H'/10

where H' is the exposed height of the wall.

F. While vertical spacing between geosynthetic reinforcement layers may vary, it shall not exceed 2.0 feet maximum in the wall design.

G. The geosynthetic reinforcement placement in the wall design shall have 100 percent continuous coverage parallel to the wall face. Gapping between horizontally adjacent layers of geosynthetic (partial coverage) will not be allowed.

1.05 SUBMITTALS: IN ACCORDANCE WITH REQUIREMENTS OF GENERAL SPECIFICATIONS, SUBMIT THE FOLLOWING:

A. Material Submittals: The Contractor shall submit six (6) sets manufacturers' literature and certifications two weeks prior to start of work stating that the SRW units and geosynthetic reinforcement meet the requirements of Section 2 of this specification.

B. Design Submittal: The Contractor shall submit six (6) sets of detailed design calculations and final retaining wall plans for approval at least two weeks prior to the beginning of wall construction. All calculations and drawings shall be prepared and sealed by a professional Civil Engineer licensed in the State of Connecticut.

1.06 DELIVERY AND STORAGE:

A. Contractor shall check materials upon delivery to assure that specified type and grade of materials have been received and proper color and texture of SRW units have been received.

B. Contractor shall store and handle materials in accordance with manufacturer's recommendations and in a manner to prevent deterioration or damage due to moisture, temperature changes, contaminants, corrosion, breaking, chipping or other causes.

C. Contractor shall protect materials from damage. Damaged materials shall not be incorporated into the retaining wall.

PART 2 - PRODUCTS

2.01 CONCRETE SEGMENTAL RETAINING WALL (SRW) UNITS:

A. SRW units shall be Shea Wall System units as manufactured by E.F. Shea/New England Concrete Products, Inc., Redi-Rock Wall System as manufactured by Redi-Rock International, VERSA-LOK Standard Retaining Wall Units, or an approved equal.

B. Texture on the face of the block shall be North Shore Granite or approved equal.

C. SRW units shall provide a minimum weight of 110 psf of wall face area.

D. If connectors are used by the SRW supplier to interconnect the SRW units, they shall meet the requirements of the manufacturer.

E. SRW units shall be sound and free of cracks or other defects that would interfere with the proper placing of the unit or significantly impair the strength or permanence of the structure. Cracking or excessive chipping may be grounds for rejection. Units showing cracks longer than ½-inch shall not be used within the wall. Units showing chips visible at a distance of 30 feet from the wall shall not be used within the wall.

F. Concrete used to manufacture SRW units shall have a minimum 28 days compressive strength of 4,000 psi and a maximum moisture absorption rate, by weight, of 8% as determined in accordance with ASTM C1372. Compressive strength test specimens shall conform to the saw-cut coupon provisions of ASTM C140.

G. SRW units' molded dimensions shall not differ more than + 1/8-inch from that specified, in accordance with ASTM C1372.

2.02 GEOSYNTHETIC REINFORCEMENT:

A. Geosynthetic reinforcement shall consist of geogrids or geotextiles manufactured as a soil reinforcement element. The type, strength, and placement location of the reinforcing goesynthetic shall be determined by the Engineer providing the wall design and as shown on the approved segmental retaining wall plans.

B. Detailed test data shall be submitted to the Engineer for approval and shall include the following:

1. Tensile strength in accordance with ASTM D 4595 or GRI GG-1.
2. Creep in accordance with ASTM D 5262.
3. Site damage and durability in accordance with GRI GG-4.
4. Pullout in accordance with GRI GG-5 or GRI GT-6
5. Connection test data in accordance with NCMA SRWU-1.

2.03 LEVELING PAD:

A. Material for the leveling pad shall consist of crushed stone meeting the requirements listed in CONN DOT Article M.02.06, Grading “C” and shall be a

minimum of 6-inches in depth unless otherwise shown on the Contract Drawings. The leveling pad must extend a minimum of 6-inches from both the front and back faces of the block unless otherwise shown on the Contract Drawings. Lean concrete with a strength of 200-300 psi and three inches thick maximum may also be used as a leveling pad material with approval by the Engineer.

2.04 DRAINAGE AGGREGATE:

A. Drainage aggregate shall be crushed stone meeting the requirements listed in CONN DOT Article M.02.06, Grading "C".

2.05 DRAINAGE PIPE:

A. The drainage collection pipe shall be a perforated or slotted PVC, or corrugated HDPE pipe. The drainage pipe may be wrapped with a geotextile to function as a filter.

B. Drainage pipe shall be manufactured in accordance with ASTM D 3034 and/or ASTM D 1248.

2.06 REINFORCED BACKFILL:

A. The reinforced backfill shall be free of debris. Unless otherwise noted on the approved segmental retaining wall plans prepared by the Wall Design Engineer, the reinforced backfill `shall be granular, well graded friable soil, free of rubbish, ice, snow, tree stumps, roots, clay and organic matter, and other deleterious or organic material; graded within the following limits:

Sieve Size	Percent Finer by Weight
3"	100
No. 10	30-95
No. 40	10-70
No. 200	0-8

2.07 GEOTEXTILE FABRIC:

A. The geotextile filter fabric shall be in accordance with AASHTO M288 guidelines.

PART 3 - EXECUTION

3.01 INSPECTION:

A. Contractor's field construction supervisor shall have demonstrated experience and be qualified to direct all work at the site.

3.02 EXCAVATION:

A. Contractor shall excavate to the lines and grades shown on the project grading plans. Contractor shall take precautions to minimize over-excavation. Over-excavation shall be filled with compacted backfill material as required by the Engineer, at the Contractor's expense.

B. Contractor shall verify location of existing structures and utilities prior to excavation. Contractor shall ensure all surrounding structures are protected from the effects of wall excavation. Excavation support, if required, is the responsibility of the Contractor.

3.03 FOUNDATION PREPARATION:

A. Following the excavation, the foundation soil shall be examined by the Engineer to assure actual foundation soil strength meets or exceeds the assumed design bearing strength. Soils not meeting the required strength shall be removed and replaced with material, as required by the Engineer.

B. Foundation soil shall be proof rolled and compacted to 95% standard Proctor density and inspected by the Engineer prior to placement of leveling pad materials.

3.04 LEVELING PAD CONSTRUCTION:

A. Leveling pad shall be placed as shown on the final, approved P.E. sealed retaining wall drawings. The leveling pad shall have a minimum thickness of 6-inches. The leveling pad should extend laterally at least a distance of 6-inches from the toe and heel of the lower most SRW unit unless shown otherwise on the Contract Drawings.

3.05 SRW UNIT INSTALLATION:

A. All SRW units shall be installed at the proper elevation and orientation as shown on the final, approved P.E. sealed wall drawings or as required by the Wall

Design Engineer. The SRW units and geosynthetic reinforcement shall be installed in accordance with the manufacturer's recommendations.

B. First course of SRW units shall be placed on the leveling pad with the aesthetic surface facing out. The units shall be leveled side-to-side, front-to-rear and with adjacent units, and aligned to ensure intimate contact with the leveling pad.

C. Prior to placement of next course, the level and alignment of the units shall be checked and corrected, where needed.

D. Layout of curves and corners shall be installed in accordance with the wall plan details or in general accordance with SRW manufacturer's installation guidelines. Walls meeting at corners shall be interlocked by overlapping successive courses.

E. Broken, chipped, stained or otherwise damaged units shall not be placed in the wall unless they are repaired and the repair method and results are approved by the Engineer.

3.06 GEOSYNTHETIC REINFORCEMENT PLACEMENT:

A. All geosynthetic reinforcement shall be installed at the proper elevation and orientation as shown on the final, approved P.E. sealed retaining wall drawings, or as required by the manufacturer’s Wall Design Engineer.

B. At the elevations shown on the final plans, (after the units, drainage material, and backfill have been placed to this elevation) the geosynthetic reinforcement shall be laid horizontally on compacted infill.

C. Geosynthetic reinforcement layers shall be one continuous piece for their entire embedment length. Overlapping of the geosynthetic in the design strength direction (perpendicular to the wall face) shall not be permitted. Along the length of the wall, horizontally adjacent sections of geosynthetic reinforcement shall be butted in a manner to assure 100 percent coverage parallel to the wall face.

D. Tracked construction equipment shall not be operated directly on the geosynthetic reinforcement. A minimum of 6-inches of backfill is required prior to operation of tracked vehicles over the geosynthetic. Turning should be kept to a minimum. Rubber-tired equipment may pass over the geosynthetic reinforcement at slow speeds (less than 5 mph).

E. The geosynthetic reinforcement should be installed under tension. The nominal tension shall be applied to the reinforcement and secured in place with staples, stakes or by hand tensioning until reinforcement is covered by six inches of fill.

3.07 DRAINAGE MATERIALS:

A. Drainage aggregate shall be installed to the line, grades, and sections shown on the final P.E. sealed retaining wall drawings. Drainage aggregate shall be placed to the minimum thickness shown on the Contract Drawings between and behind units.

B. Drainage collection pipes shall be installed to maintain gravity flow of water outside the reinforced soil zone. The drainage collection pipe shall daylight at an elevation lower than the lowest point of the pipe within the aggregate drain.

C. The main collection drain pipe, just behind the block facing, shall be a minimum of 3-inches in diameter. The secondary collection drain pipes should be sloped a minimum of 2% to provide gravity flow into the main collection drain pipe. Drainage laterals shall be spaced at a maximum 50 feet spacing along the wall.

3.08 BACKFILL PLACEMENT:

A. The reinforced backfill shall be placed as shown in the final, approved wall drawings in the maximum compacted lift thickness of 10-inches and shall be compacted to a minimum of 95% of standard Proctor density (ASTM D 698) at a moisture content within 2% of optimum. The backfill shall be placed and spread in such a manner as to eliminate wrinkles or movement of the geosynthetic reinforcement and the SRW units.

B. Only hand-operated compaction equipment shall be allowed within 3 feet of the back of the wall units. Compaction within the 3 feet behind the wall units shall be achieved by at least three (3) passes of a lightweight mechanical tamper, plate, or roller.

C. At the end of each day's operation, the Contractor shall slope the last level of backfill away from the wall facing and reinforced backfill to direct water runoff away from the wall face.

D. At completion of wall construction, backfill shall be placed level with final top of wall elevation. If final grading, paving, landscaping, and/or storm drainage installation adjacent to the wall is not placed immediately after wall completion, temporary grading and drainage shall be provided to ensure water runoff is not directed at the wall nor allowed to collect or pond behind the wall until final construction adjacent to the wall is completed.

END OF SECTION

SECTION 03351

ALTERNATE EXPOSED AGGREGATE CONCRETE FINISH

PART 1 – GENERAL

1.01 SUMMARY:

A. Section includes: Exposed Aggregate Concrete produced through the use of a chemical surface retarder to expose the aggregate of a gap graded concrete mix

B. Related Sections: Refer to the following sections for related work

1. Section 03100, CONCRETE FORMWORK

2. Section 03300: CAST-IN-PLACE CONCRETE

3. Section: 07900: JOINT SEALANTS

1.02 REFERENCES:

A. American Concrete Institute (ACI)

B. American Society for Testing and Materials (ASTM)

C 31 Practices for Making and Curing Concrete Test Specimens in the Field

C 33 Specification for Concrete Aggregates

1.03 SUBMITTALS:

A. General: Submit the following items in accordance with the Conditions of Contract and Section 01330, “Submittal Procedures”.

B. Product Data: Submit product data for the following materials and items.

C. Chemical Surface Retarder.

D. Sealants

1.04 QUALITY ASSURANCE:

A. Mock-up Panels: Prepare one mock-up panel for each of the Grade Selection / Aggregate Size to Exposed at the project site to demonstrate proficiency of the contractor as well as determine the best procedures and degree of aggregate exposure. Mock-up panels shall be a minimum of 6' x 6'. Contractor shall use the methods and materials proposed for use on the final installation. Uniformity in appearance of each panel shall be the responsibility of the contractor. The Town of Greenwich approved mock-up panel shall serve as a standard of appearance for the final work to be produced. No work on the exterior concrete slab with the exposed aggregate concrete finish will be performed until the Town of Greenwich has approved a mock up. Any mock up not to be used will be removed and disposed of by the Contractor prior to any work. Upon completion of the project the Contractor will remove and dispose of the town approved mock up.

Part 2 – PRODUCTS

2.01 PLANT, EQUIPMENT, MACHINES AND TOOLS

A. General: Plant, equipment, machines and tools used in the workplace shall be subject to approval and shall be maintained in a satisfactory working condition at all times.

1. Provide equipment with capability of producing the required product, meeting or exceeding grade controls, thickness control and smoothness requirements as specified.

2. Use of equipment shall be discontinued if it produces unsatisfactory results.

3. Owner's representatives shall have access to the plant and all equipment to ensure proper operation and compliance with the specifications at all times during construction.

2.02 CONCRETE SURFACE RETARDERS:

A. Acceptable Materials: **" Optimus Flatwork Finish Retarders "** by Architectural Concrete chemicals (ACC), 223 Westhampton Ave. Capitol Heights, MD 20743, www.acchemicals.com , 301-336-9300, Dennis Baugh, V.P. Sales & Marketing or approved equal.

2.03 CONCRETE PROTECTIVE COATING:

A. Acceptable Materials: **" ACC Tem-Protect "** by Architectural Concrete Chemicals. 223 Westhampton Ave, Capitol Heights, MD 20743, www.acchemicals.com 301-336-9300 Contact: Dennis Baugh V.P. Sales & Marketing or approved equal.

2.04 CONCRETE PROTECTIVE COATING FOR INCLEMENT WEATHER:

A. Acceptable Materials: **"ACC Rain-Shield" by** Architectural Concrete Chemicals (ACC), 223 Westhampton Ave. Capitol Heights, MD 20743, www.acchemicals.com , 301-336-9300 Contact: Dennis Baugh V.P. Sales & Marketing or approved equal.

2.05 CONCRETE COARSE AGGREGATE:

A. Coarse Aggregate: coarse aggregate for the slab mix design shall be pea stone, color and size shall be approved by owner prior to any pouring of the exterior exposed aggregate concrete slab.

PART 3 EXECUTION

3.01 CONCRETE FINISHING;

A. General: Do not use tools that may force the aggregate away from the surface creating a nonuniform surface after exposure.

1. Protect all curbs, borders and adjacent concrete and masonry surfaces, pavers, stones etc. that are not to receive retarder finish prior to concrete placement and retarder application

2. Place concrete in the manner prescribed previously. Screed or strike off the surface in two (2) directions using a wooden or metal straight edge to achieve the proper elevation in a sawing motion back and forth.\

3. Allow the bleed water to evaporate the surface. It can than be floated using a wooden hand float or a bull-float preferably wooden to close the surface and surround the coarse aggregate with cement paste. DO NOT OVERWORK THE SURFACE, AS THIS TENDS TO DRIVE THE AGGREGATE DOWN AWAY FROM THE SURFACE TO BE EXPOSED. Float to a uniform appearance.

B. Concrete Surface Retarders and Coatings Application.

Spray Applied, film forming top surface retarder, calibrated for specific sized aggregates and finish requirements without plastic covering following manufacturer's recommendations and instructions.

Following manufacturer's recommendations and instructions spray apply film forming protective coating for adjacent masonry and concrete surfaces.

Spray applied protective coating for inclement weather including prolonged rain and extremely hot weather as per manufacturer's recommendations and instructions.

Soon after the floating has been done spray on surface retarder using a low-pressure sprayer with a 0.5gpm tip at a rate of 250—350 sq./ft. per gallon in a full hiding coat.

a. Once dry the surface retarder will yield a coating that provides intermittent rain protection. Once completely dry it can be with protective coating for inclement weather designed to protect the surface if heavy extended rains are predicted or extremely hot dry weather is expected.

3.02 RETARDER SELECTION GUIDE:

Grade Selection / Aggregate Size to Expose

Sand Blast - Deep / 1/8" to 3/8" agg.
Exposed Finish – Sm Agg. / 3/8" Graded agg.
Exposed Finish – Med. Agg. / 3/8" to $^{1}/_{2}$" agg.

Wash surface with water rinse using stiff brooms and water hose or by high pressure washing with power equipment as early as 4- 6 hours in very hot weather or the following day up to 24 hours. Retarder removal intervals are dependent upon strength of the concrete mix, aggregate size and desired washing techniques. Earlier washing on the light etches may be necessary. Verify in accordance with the mock-up approval detailed herein.

1. Rinse water and cement matrix removal shall be in accordance with local codes and should not be allowed to be washed or flow down to arroyos, storm sewers, ponds, streams or sanitary sewers by precipitation or other surface flows.

2. Prior to completion of the project, remove wash water residue from the site to location approved by the local district.

03 CONCRETE SURFACE REPAIRS

A. Patching Defective Areas: Immediately cut out honeycomb, rock pockets and voids over $^{1}/_{4}$ inch (6mm) in any dimension as well as holes left by tie rods, bolts etc. down to solid concrete but, in no case to a depth less than 1 inch (25mm).

1. Cut edges perpendicular to concrete surface.

2. Thoroughly clean, dampen with water, and brush coat area to be patched with neat cement grout or proprietary bonding agent before placing cement mortar or proprietary patching compound.

B. Remove and replace concrete with defective surfaces if defects cannot be repaired to the satisfaction of the owner's representative.

1. Surface defects include color and texture irregularities, cracks, spalls, air bubbles, honeycombs, rock pockets, fins and other projections on the surface as well as stains and other discolorations that cannot be removed by cleaning.
    a. Dampen concrete surfaces in contact with patching concrete and brush with neat cement grout or apply concrete bonding agent.
    b. Mix Patching concrete of same materials to provide concrete of same type of class as original concrete.
    c. Place, compact and finish to blend with adjacent finished concrete. Cure in same manner as adjacent concrete.

END OF SECTION

SECTION 08221

FIBERGLASS REINFORCED DOOR AND DOOR FRAME SYSTEMS

PART 1 - GENERAL

1.01 WORK INCLUDED:

A. Fiberglass Reinforced Plastic (FRP) Doors.

B. Fiberglass Door Frames.

C. Cylinder locks, including padlocks, shall be grand master keyed as directed by the Engineer. Cylinders shall be removable core type. Three change keys shall be furnished with each lock, and each shall have the change number stamped thereon. Six master keys shall be furnished for each master set furnished.

D. Construction cores shall be installed in locks for use during construction.

E. Adequate arrangements for providing construction security without risking the integrity of the final locks will be acceptable, subject to the prior approval of the Engineer.

1.02 RELATED WORK:

A. Section 01330, SUBMITTALS

B. Section 04200, MASONRY

C. Section 05500, MISCELLANEOUS METALS

D. Section 07920, JOINT SEALANTS

E. Section 08700, DOOR HARDWARE

F. Section 08800, GLASS & GLAZING

G. Section 09900, PAINTING

1.03 REFERENCES:

A. The following standards form a part of this specification:

American Society for Testing and Materials (ASTM)

ASTM D523	Standard Test Method for Specular Gloss.
ASTM D635	Standard Test Method for Rate of Burning and/or Extent and Time of Burning of Self-Supporting Plastics in a Horizontal Position.

ASTM E84 Standard Test Method for Surface Burning Characteristics of Building Materials.

ASTM E152 Standard Methods of Fire Tests of Door Assemblies.

National Fire Protection Association (NFPA)

NFPA 252 Standard Methods of Fire Tests of Door Assemblies.

Steel Door Institute (SDI)

SDI-100 Recommended Specifications for Steel Doors and Frames.

Underwriters' Laboratories, Inc. (UL)

UL 10B Standard for Fire Tests of Door Assemblies.

UL 305 Standard for Panic Hardware.

B. Where reference is made to one of the above standards, the revisions in effect at the time of bid opening shall apply.

1.04 SUBMITTALS:

A. General: Submit in accordance with Section 01330 SUBMITTALS and this section.

B. Product Data: Manufacturer's printed product data indicating characteristics of products specified in this Section.

C. Shop Drawings:

1. Elevations: Dimensioned elevation of door opening assembly in project; indicate size and location of door hardware.

2. Details: Installation details of installation condition. Include finish hardware schedule.

D. Selection Samples: Manufacturer's standard color chips.

E. Verification Samples: Two (2) samples to verify color match.

F. Manufacturer's Instructions: Printed installation instructions for door opening assemblies.

1.05 DELIVERY, STORAGE, AND HANDLING:

A. Packing, Shipping, Handling and Unloading: Package door opening assemblies in manufacturer's standard containers.

B. Store door assemblies in manufacturer's standard containers, on end, to prevent damage to face corners and edges.

1.06 QUALITY ASSURANCE:

A. Standards: Comply with the requirements and recommendations in applicable specification and standards.

B. Performance: A minimum five year record of production of frames, doors and panels and completion of similar projects in type and size within the last ten years.

C. Instruction: The manufacturer or his representative will be available for consultation by phone to all parties engaged in the project including one day on-site instruction to installation personnel.

B. Field Measurement: Field verify all information prior to fabrication and furnishing of materials. Furnish and install materials omitted due to lack of verification at no additional cost to the Owner.

1.07 WARRANTY:

A. Contractor's Warranty: For a period of one year from the date of substantial completion, the Contractor warrants to the Owner that FRP doors conform to these specifications and is free from defects in material and workmanship. The Contractor shall repair or replace, at the sole option of and at no cost to the Owneer, any work found to be defective within said warranty period. Such repair or replacement shall include the cost of removal and reinstallation.

B. Manufacturer's Warranty: The Contractor shall obtain from the manufacturer its warranty that (FRP Door) will be free of defects in design, materials, and workmanship for a period of 10 years following substantial completion. Said warranty, containing no exclusion or limitations, shall be in a form acceptable to, and for the benefit of, the Owner and shall be submitted by the Contractor as consition of final payment.

PART 2 - PRODUCTS

2.01 MANUFACTURERS:

A. Acceptable Manufacturers: FIB-R-DOR Division of Advance Fiberglass, Inc., Maumelle AR ; Corrim Company, Oshkosh, WI; Special-Lite, Inc., Decatur, MI; Commercial Door Systems, Philadelphia, PA; or equal.

B. Requests for substitutions will be considered upon submittal of information and samples indicating the substitution will be equal or better than that specified.

2.02 MATERIALS:

A. Fiberglass Mat: Minimum 1.5 ounces per square foot.

B. Anchors: Manufacturer's standard stainless steel expansion anchors for existing openings.

C. Fasteners: Stainless steel.

2.03 MANUFACTURED UNITS:

A. Non-rated Fiberglass Reinforced Plastic (FRP) Doors:

1. Thickness: 1-3/4-inches.

2. Thermal Insulating Value: 'R' factor 11.

3. Construction:

a. Core: End-grain balsa wood, resin-impregnated.

b. Door Plates: Molded in one continuous piece, resin reinforced with hand-laid glass fiber mat, nominal 1/8-inch thick, minimum 15 mil gel-coated surface.

c. Door Edges: Minimum three (3) layers resin-reinforced glass fiber mat, nominal 3/8-inch thick, machine tooled.

4. Sizes: Indicated on drawings.

5. Finish: Smooth gloss surface, minimum value 88 in accordance with ASTM D523.

6. Color: As chosen by the Engineer from the manufacturer's standard colors.

B. Non-rated Fiberglass Frames:

1. Construction: One-piece pultruded fiberglass reinforced plastic, minimum ¼-inch wall thickness, jamb-to-head joints mitered and reinforced with FRP clips and stainless steel fasteners; conforming to SDI requirements for performance equivalent to 16 gage steel frames.

2. Frame profile: 5-3/4-inches deep, 2-inches wide face; double rabbeted with 5/8-inch high stop.

3. Sizes: Indicated on drawings.

4. Finish: Satin finish, with true and consistent color throughout frame thickness.

5. Color: As chosen by the Engineer from the manufacturer's standard colors.

C. Frame Anchors: Types recommended by manufacturer for project conditions.

D. Fasteners: Stainless steel screws.

H. Door Hardware: As specified in the Contract Drawings.

2.04 FABRICATION:

A. Fiberglass Reinforced Plastic (FRP) Doors:

1. Minimum glass fiber to resin ratio: 30 percent.

2. Mortise for lockset, and recess for strike plate in lock stile.

3. Embed steel reinforcement for hinges in fiberglass matrix; provide for hinge leaf recesses in hinge stile.

B. Fiberglass Frames:

1. Mortise for lock strike, and recess for strike plate in lock jamb.

2. Reinforce for hinges and other indicated hardware.

PART 3 - EXECUTION

3.01 EXAMINATION

A. Verification of Conditions:

1. Opening is correctly prepared to receive doors and frames.

2. Opening is correct size and depth in accordance with shop drawings.

B. Installer's Examination:

1. Have installer examine conditions under which construction activities of this section are to be performed and submit written report if conditions are unacceptable.

2. Transmit two copies of installer's report to Engineer within 24 hours of receipt.

3. Beginning construction activities of this section before unacceptable conditions have been corrected is prohibited.

4. Beginning construction activities of this section indicates installer's acceptance of conditions.

3.02 INSTALLATION:

A. Install door opening assemblies in accordance with shop drawings, SDI-100, and manufacturer's printed installation instructions, using installation methods and materials specified in installation instructions.

B. Installation of door hardware is specified in Section 08700 DOOR HARDWARE.

C. Install door hardware in accordance with manufacturer's printed instructions, using through-bolts to secure surface applied hardware.

D. Site Tolerances: Maintain plumb and level tolerances specified in manufacturer's printed installation instructions.

3.03 ADJUSTING:

A. Adjust doors in accordance with door manufacturer's maintenance instructions to swing open and shut without binding, and to remain in place at any angle without being moved by gravitational influence.

B. Adjust door hardware to operate correctly in accordance with hardware manufacturer's maintenance instructions.

3.04 CLEANING:

A. Clean surfaces of door opening assemblies and sight-exposed door hardware in accordance with manufacturer's maintenance instructions.

3.05 PROTECTION OF INSTALLED PRODUCTS:

A. Protect door opening assemblies and door hardware from damage by subsequent construction activities until final inspection.

END OF SECTION

SECTION 11304

SUBMERSIBLE WASTEWATER PUMPING EQUIPMENT

PART 1 - GENERAL

1.01 WORK INCLUDED:

This Section covers the submersible wastewater pumping equipment to be furnished and installed where indicated on the drawings. Each pump shall be complete with all equipment specified herein. All components, except as otherwise noted, shall be provided by one supplier and shall be installed by the Contractor.

1.02 RELATED WORK:

A. Section 11000, EQUIPMENT – GENERAL

B. Division 13, SPECIAL CONSTRUCTION

C. Division 16, ELECTRICAL

1.03 SYSTEM DESCRIPTION:

A. Each pump shall be furnished with motor, level controls, removal system, and all associated equipment and accessories required to make a complete system.

B. Control of pumps shall be automatic using a programmable controller. All pumps shall operate automatically with provision for manual override.

C. Equipment and accessories not specifically described herein shall be the manufacturer's standard catalog products unless otherwise approved by the Engineer.

1.04 QUALITY ASSURANCE:

A. All equipment shall conform to the following criteria:

1. Equipment shall be manufacturer's standard products presently in commercial production.

2. Conform to Hydraulic Institute Standards.

3. All the equipment specified under this Section shall be furnished by a single supplier and shall be products of manufacturers regularly engaged in the production of said equipment. The supplier shall have the sole responsibility for proper functioning of the complete pump packages.

4. Conform to requirements for materials, installation and equipment approvals of state, local, Underwriter's Laboratories, Inc., or other applicable codes, whether or not called for on the drawings or in the specifications.

5. Workmanship shall be first class in all respects.

6. Base the use of unspecified materials on their continuous and successful employment under similar conditions, as called for in this section.

B. MANUFACTURER'S QUALIFICATIONS:

1. Quality Assurance System

   Manufacturer shall have Quality Assurance System in place which complies with NQA-1, ISO 9001:2000, ANSI and MIL-Q-9858A. Upon request from the Engineer, the manufacturer shall submit to an audit to verify compliance with the referenced standards.

2. The pumps shall undergo factory testing and all curves certified. This testing shall confirm the pumps meet the capacity and head requirements at the pump speeds specified based on water. The testing and tolerances shall be as specified by the Hydraulic Institute Standards.

3. All spare parts shall be available for same day shipment and next day delivery. The manufacturer shall maintain a fully equipped shop facility to perform all operations including welding, fabrication, assembly and testing. All materials shall be designed to withstand the stresses encountered in fabrication, erection and operation. All equipment shall be of corrosion resistant materials or shall be suitably protected by the supplier with corrosion resistant industrial coatings approved by the Engineer.

4. Submersible wastewater pumping equipment shall be as manufactured by Flygt.

C. FACTORY TESTS:

The pumps and motors shall be given an operational test prior to shipment in accordance with the standards of the Hydraulic Institute, test level “B” criteria. Certified pump performance curves shall be submitted to the Engineer for approval. The data on the certified curves shall include the motor and pump nameplate information, serial numbers, performance curve showing five (5) points of operation including shut off head, pump speed, input horsepower, watts, volts, amperes and efficiency. Recordings of the test shall substantiate the correct performance of the equipment at the design head, capacity, speed and horsepower as herein specified.

D. Field acceptance tests shall be performed as specified in Part 3 Execution.

1.05 REFERENCES:

A. The following standards form a part of this specification:

American National Standard Institute (ANSI)

ANSI A21.10 Standard for Gray-Iron and Ductile Iron Fittings, 3-in. through 38-in., for Water and Other Liquids.

ANSI A21.11 Standard for Rubber-Gasket Joints for Ductile Cast-Iron and Gray-Iron Pressure Pipe and Fittings.

ANSI A21.15 Standard for Flanged Cast-Iron and Ductile-Iron Pipe with Threaded Flanges.

ANSI A21.51 Ductile-Iron Pipe Centrifugally Cast in Metal Molds or Sand-Lined Molds, for Water or Other Liquids.

American Society for Testing and Materials (ASTM)

ASTM A48 Specifications for Gray-Iron Castings.

ASTM A53 Specifications for Pipe, Steel, Black and Hot-dipped, Zinc Coated, Welded and Seamless.

ASTM D429 Rubber Property - Adhesion to Rigid Substrates

ASTM D1785 Poly Vinyl Chloride (PVC) Plastic Pipe, Schedules 40, 80, and 120.

National Electric Code (NEC)

NEC Code National Electrical Code.

National Electrical Manufacturers Association (NEMA)

NEMA Standard as Specified.

American Water Works Association (AWWA)

AWWA C509 Standard for Resilient-Seated Gate Valves, 3 through 12 NPS, for Water and Sewer Systems

1.06 SUBMITTALS: IN ACCORDANCE WITH REQUIREMENTS OF GENERAL SPECIFICATIONS, SUBMIT THE FOLLOWING:

A. Prior to fabrication, the Contractor shall submit to the Engineer for review, six copies of each of the following: complete shop drawings, including manufacturer's data sheets,

showing illustrated cuts of the item(s) with scale details, sizes, dimensions, capacities, performance characteristics, wiring diagrams, controls, and other pertinent information, complete operating and maintenance instructions, and parts lists. A secondary submittal shall include the actual performance of the units under factory testing.

B. A complete, easily readable functional description of the proposed equipment.

C. Refer to Section 01329 and 01330 for submittal information. In addition, the submittals shall also include the following:

1. General arrangement drawings.
2. Certified shop and erection drawings showing all important details of construction, dimensions, moment, rotational and torsion loads, anchor bolt locations, and field connections.
3. Descriptive literature, bulletins, and catalogs of the equipment.
4. Detailed data on the pumps, motors, control panels and appurtenances.
5. Certified performance test reports.
6. Long term storage, installation, operation, and start-up procedures including lubrication requirements.
7. Total weight of the equipment including the weight of the single largest item.
8. O&M manuals as described herein.
9. Complete list of deviations from the drawings and specifications.
10. Letter from manufacturer, certifying that proposed equipment is approved for use as shown on the drawings and specified herein.
11. A certified installation list and start-up date for the manufacturers' equipment currently operating in United States installations.

D. In the event that it is impossible to conform to certain details of the specifications due to different manufacturing techniques, describe completely all nonconforming aspects.

E. Upon completion of the installation of each unit, the results of the field and acceptance tests as specified under this section of the specification shall be submitted to the Engineer.

F. Furnish written certification from the manufacturer's representative of the proper installation and operation of each component.

1.07 OPERATIONS AND MAINTENANCE MANUALS (four sets):

A. The manufacturer shall be responsible for supplying written instructions, which shall be sufficiently comprehensive to enable the operator to operate and maintain the equipment and all associated equipment supplied by the manufacturer. Said instructions shall assume that the operator is familiar with equipment, motors, piping, and valves, but that he has not previously operated and/or maintained the exact equipment supplied.

B. These instructions shall be prepared as a systems manual applicable solely to the equipment supplied by the manufacturer to these specifications, and shall include those

devices and equipment supplied by him. However, items of equipment for which the manufacturer has made mounting or other provisions, but which he has not supplied, may be excluded from these instructions.

C. Operation and maintenance instructions shall be specific to the equipment supplied in accordance with these specifications. Instruction manuals applicable to many different configurations and pumps, and which require the operator to selectively read portions of the instructions shall not be acceptable.

D. Submit operations and maintenance manuals for the equipment, within 30 days of shop drawing approval.

E. Manuals shall include but are not limited to the following:

1. Complete operations and maintenance information for the specific equipment.

2. Name, address, and telephone number of the nearest competent service representative who can furnish parts and technical service.

3. Complete parts list including the manufacturer's reference and ordering numbers, including any required maintenance items or tools.

4. Descriptive literature, including illustrations, covering the operational features of the equipment, specific for the particular installation, with all inapplicable information omitted or marked out.

5. Unit weight, moment, rotational and torsion loads.

6. Operating, maintenance and trouble shooting information.

7. Complete connection, interconnecting and assembly diagrams.

8. Approved Shop Drawings.

9. Recommended Spare Parts List.

F. Manuals shall also include the following:

1. Instructions for all adjustments, which must be performed at initial startup of the equipment, adjustments which must be performed after the replacement of control system components, and adjustments which must be performed in the course of preventive maintenance as specified by the manufacturer.

2. Instructions for the adjustment, calibration, and testing of selected electronic components or assemblies, normally considered replaceable by the manufacturer, whose performance is not ascertainable by visual inspection.

3. Service instructions for major components not manufactured by the manufacturer but which are supplied by him in accordance with these specifications. Incorporation of literature produced by the actual component manufacturer will be acceptable.

4. Electrical schematic diagram of the equipment packages as supplied, prepared in accordance with all applicable standards. Schematics shall show, to the extent of authorized repair, motor branch, control, and alarm system circuits, and interconnections among these circuits. Wire numbers shall be shown on the schematic. Schematic diagrams for electronic equipment, the detail parts of which are normally repairable by the operator, need not be included, and shall not be substituted for an overall schematic diagram. Partial schematics, block diagrams, and simplified schematics shall not be provided in lieu of an overall schematic diagram.

G. The manuals shall be reviewed by the Engineer for completeness; those that are deemed inadequate shall be returned for correction.

H. Operation and maintenance instructions which are limited to a collection of component manufacturer literature without overall package instructions will not be acceptable.

I. Refer to SECTION 01760 – Operations and Maintenance Manuals for additional information.

1.08 DELIVERY, STORAGE, AND HANDLING:

A. The equipment, materials and spare parts shall be shipped complete and ready for installation except where partial disassembly is required by transportation regulations, is recommended by the manufacturer, or for protection of components.

B. All necessary location drawings and templates required to install the equipment in concrete, masonry, etc., shall be furnished and delivered to the site by the manufacturer of the equipment furnished under this Section, for installation under other Sections of the specifications. Delivery of these items shall be as required by the overall construction schedule.

C. Deliver to Site. The Contractor shall deliver and unload the equipment and properly store and maintain the equipment as required until installation.

D. Units temporarily stored shall have covered and taped ends for protection. Equipment damaged or bent during storage, shipment or unloading shall be replaced at no additional cost to the Owner.

E. The manufacturer shall properly store and support equipment. Protect all exposed surfaces. Keep records of the storage parameters and the dates that storage procedures were performed.

F. Store motors in buildings or trailers, which have a concrete or wooden floor, a roof and fully closed walls on all sides. Protect the equipment from being contaminated by dust, dirt, vibration, ultra violet radiation and moisture.

G. Provide suitable temporary leads for motor space heaters, if space heaters are deemed necessary.

H. Spare parts shall be packed in containers bearings labels clearly designating contents and pieces of equipment for which intended. The containers shall be suitable for long-term storage by the Owner. Spare parts shall be delivered to the site at the same time as the basic equipment and turned over to the Owner after completion of work.

I. Fabricated assemblies shall be shipped in the largest sections permitted by carrier regulations and shall be properly match-marked for ease of field erection.

J. The manufacturer shall recommend and confirm all storage arrangements.

1.09 WARRANTY STATEMENT:

The manufacturer's warrantees from defects shall contain a provision that the manufacturer shall repair or replace any defects, to the satisfaction of and at no additional cost to the Owner, for a period of twenty four (24) months, from the date of project Substantial Completion. The warranty information shall be provided in writing from the manufacturer in the submittal and shall be revised upon Substantial Completion to incorporate the date of the project Substantial Completion.

PART 2 - PRODUCTS

2.01 REQUIREMENTS:

Furnish and install two (2) submersible non-clog wastewater pump(s). Each pump shall be equipped with a 4 HP, submersible electric motor connected for operation on 460 volts, 3 phase, 60 hertz, 4-wire service, with 40 feet of submersible cable (SUBCAB) suitable for submersible pump applications. The power cable shall be sized according to NEC and ICEA standards and also meet with P-MSHA Approval.

2.02 PUMP DESIGN CONFIGURATION:

A. The pump shall be supplied with a mating cast iron 3- inch discharge connection and be capable of delivering 200 GPM at 38 FT. TDH. Shut off head shall be 90 feet (minimum).

B. The pump(s) shall be automatically and firmly connected to the discharge connection, guided by no less than two guide bars extending from the top of the station to the discharge connection. There shall be no need for personnel to enter the wet-well. Sealing of the pumping unit to the discharge connection shall be accomplished by a machined metal to metal watertight contact. Sealing of the discharge interface with a diaphragm, O-ring or profile gasket will not be acceptable. No portion of the pump shall bear directly on the

sump floor. Each pump shall be fitted with 50 feet of stainless steel lifting chain. The working load of the lifting system shall be 50% greater than the pump unit weight.

C. The pump shall be Flygt Model No. NP3085.

2.03 PUMP CONSTRUCTION:

A. Major pump components shall be of grey cast iron, ASTM A-48, Class 35B, with smooth surfaces devoid of blow holes or other irregularities. The lifting handle shall be of stainless steel. All exposed nuts or bolts shall be AISI type 316 stainless steel construction. All metal surfaces coming into contact with the pumpage, other than stainless steel or brass, shall be protected by a factory applied spray coating of acrylic dispersion zinc phosphate primer with a polyester resin paint finish on the exterior of the pump.

B. Sealing design shall incorporate metal-to-metal contact between machined surfaces. Critical mating surfaces where watertight sealing is required shall be machined and fitted with Nitrile or optional Viton rubber O-rings. Fittings will be the result of controlled compression of rubber O-rings in two planes and O-ring contact of four sides without the requirement of a specific torque limit.

C. Rectangular cross sectioned gaskets requiring specific torque limits to achieve compression shall not be considered as adequate or equal. No secondary sealing compounds, elliptical O-rings, grease or other devices shall be used.

2.04 COOLING SYSTEM:

Motors are sufficiently cooled by the surrounding environment or pumped media. A water cooling jacket is not required.

2.05 CABLE ENTRY SEAL:

The cable entry seal design shall preclude specific torque requirements to insure a watertight and submersible seal. The cable entry shall consist of a single cylindrical elastomer grommet, flanked by washers, all having a close tolerance fit against the cable outside diameter and the entry inside diameter and compressed by the body containing a strain relief function, separate from the function of sealing the cable. The assembly shall provide ease of changing the cable when necessary using the same entry seal.

2.06 MOTOR:

A. The pump motor shall be a NEMA B design, induction type with a squirrel cage rotor, shell type design, housed in an air filled, watertight chamber. The stator windings shall be insulated with moisture resistant Class H insulation rated for 180°C (356°F). The stator shall be insulated by the trickle impregnation method using Class H monomer-free polyester resin resulting in a winding fill factor of at least 95%. The motor shall be inverter duty rated in accordance with NEMA MG1, Part 31.The stator shall be heat-shrink fitted

into the cast iron stator housing. The use of multiple step dip and bake-type stator insulation process is not acceptable. The use of bolts, pins or other fastening devices requiring penetration of the stator housing is not acceptable. The motor shall be designed for continuous duty handling pumped media of 40°C (104°F) and capable of no less than 30 evenly spaced starts per hour. The rotor bars and short circuit rings shall be made of cast aluminum. Thermal switches set to open at 125°C (260°F) shall be embedded in the stator end coils to monitor the temperature of each phase winding. These thermal switches shall be used in conjunction with and supplemental to external motor overload protection and shall be connected to the control panel. The motor and the pump shall be produced by the same manufacturer.

B. The combined service factor (combined effect of voltage, frequency and specific gravity) shall be a minimum of 1.15. The motor shall have a voltage tolerance of plus or minus 10%. The motor shall be designed for operation up to 40°C (104°F) ambient and with a temperature rise not to exceed 80°C. A performance chart shall be provided upon request showing curves for torque, current, power factor, input/output kW and efficiency. This chart shall also include data on starting and no-load characteristics. The motor horsepower shall be adequate so that the pump is non-overloading throughout the entire pump performance curve from shut-off through run-out.

C. The motor shall be capable of continuous submergence underwater without loss of watertight integrity to a depth of 65 feet or greater.

2.07 EXPLOSION-PROOF PUMPS (X):

A. The pump system including the pump, motor and power cable shall be approved for use in areas classified as hazardous locations in accordance with the NEC Class I, Div. 1, Group C and D service as determined and approved by a U.S. nationally recognized testing laboratory (U.L., FM, CSA) at the time of the bidding of the project. As required by Factory Mutual (FM) the motor shall be capable of operating in pumped media up to 104 DEGREES F. Motor thermal switches shall monitor and protect the motor from excessive temperature. An internal Float Switch shall be available, as an option, in the motor chamber. Service of explosion-proof submersible units shall be performed by qualified FM experienced personnel. The pump manufacturer must provide training schools to qualify personnel in the proper service and repair of explosion-proof pumps.

B. The power cable shall be sized according to the NEC and ICEA standards and shall be of sufficient length to reach the junction box without the need of any splices. The outer jacket of the cable shall be oil resistant chlorinated polyethylene rubber. The cable shall be capable of continuous submergence underwater without loss of watertight integrity to a depth of 65 feet or greater.

C. SHIELDED POWER CABLE:

The power cable shall be sized according to the NEC and ICEA standards and shall be of sufficient length to reach the junction box without the need of any splices. The power cable shall be of a shielded design in which an overall tinned copper shield is included and each

individual phase conductor is shielded with an aluminum coated foil wrap. The outer jacket of the cable shall be oil resistant chlorinated polyethylene rubber. The cable shall be capable of continuous submergence underwater without loss of watertight integrity to a depth of 65 feet or greater.

2.08 BEARINGS:

The pump shaft shall rotate on two bearings. Motor bearings shall be permanently grease lubricated. The upper bearing shall be a single deep groove ball bearing. The lower bearing shall be a two row angular contact bearing to compensate for axial thrust and radial forces. Single row lower bearings are not acceptable. The minimum L10 bearing life shall be 50,000 hours at any usable portion of the pump curve.

2.09 MECHANICAL SEAL:

A. Each pump shall be provided with a tandem mechanical shaft seal system consisting of two totally independent seal assemblies. The seals shall operate in a lubricant reservoir that hydro-dynamically lubricates the lapped seal faces at a constant rate. The lower, primary seal unit, located between the pump and the lubricant chamber, shall contain one stationary and one positively driven rotating, corrosion and abrasion resistant tungsten-carbide ring. The upper, secondary seal unit, located between the lubricant chamber and the motor housing, shall contain one stationary and one positively driven rotating, corrosion and abrasion resistant tungsten-carbide seal ring.

B. Each seal interface shall be held in contact by its own spring system. The seals shall require neither maintenance nor adjustment nor depend on direction of rotation for sealing. The position of both mechanical seals shall depend on the shaft. Mounting of the lower mechanical seal on the impeller hub will not be acceptable. For special applications, other seal face materials shall be available.

C. The following seal types shall not be considered acceptable or equal to the dual independent seal specified: shaft seals without positively driven rotating members, or conventional double mechanical seals containing either a common single or double spring acting between the upper and lower seal faces. No system requiring a pressure differential to offset pressure and to affect sealing shall be used.

D. Each pump shall be provided with a lubricant chamber for the shaft sealing system. The lubricant chamber shall be designed to prevent overfilling and to provide lubricant expansion capacity. The drain and inspection plug, with positive anti-leak seal shall be easily accessible from the outside. The seal system shall not rely upon the pumped media for lubrication. The motor shall be able to operate dry without damage while pumping under load.

E. Where a seal cavity is present in the seal chamber, the area about the exterior of the lower mechanical seal in the cast iron housing shall have cast in an integral concentric spiral groove. This groove shall protect the seals by causing abrasive particulate entering the seal cavity to be forced out away from the seal due to centrifugal action.

F. Seal lubricant shall be non-hazardous.

2.10 PUMP SHAFT:

A. Pump and motor shaft shall be the same unit. The pump shaft is an extension of the motor shaft. Couplings shall not be acceptable. The pump shaft shall be stainless steel – ASTM A479 S43100-T.

B. If a shaft material of lower quality than stainless steel – ASTM A479 S43100-T is used, a shaft sleeve of stainless steel – ASTM A479 S43100-T is used to protect the shaft material. However, shaft sleeves only protect the shaft around the lower mechanical seal. No protection is provided in the lubricant housing and above. Therefore, the use of stainless steel sleeves will not be considered equal to stainless steel shafts.

2.11 IMPELLER (Adaptive):

A. The impeller shall be cast of Duplex Stainless Steel (ASTM CD-4MCuN), dynamically balanced, semi-open, multi-vane, back-swept, non-clog design. The impeller vane leading edges shall be mechanically self-cleaned upon each rotation as they pass across a spiral groove located on a replaceable insert ring.

B. The impeller shall be capable of handling solids, fibrous materials, sludge and other matter found in waste water. The screw shape of the impeller inlet shall provide an inducing effect for the handling of rag-laden wastewater. The impeller shall be capable of momentarily moving axially upwards a distance of 15mm/0.6-in. to allow larger debris to pass through and immediately return to normal operating position.

2.12 VOLUTE / SUCTION COVER:

The pump volute shall be a single piece grey cast iron, ASTM A-48, Class 35B, non-concentric design with smooth passages of sufficient size to pass any solids that may enter the impeller. Minimum inlet and discharge size shall be as specified. The volute shall have a replaceable suction cover insert ring in which are cast spiral-shaped, sharp-edged groove(s). The spiral groove(s) shall provide trash release pathways and sharp edge(s) across which each impeller vane leading edge shall cross during rotation so to remain unobstructed. The insert ring shall have a guide pin integral to the casting and shall be cast of ASTM A-48, Class 35B grey iron and provide effective sealing between the multi-vane semi-open impeller and the volute housing.

2.13 PROTECTION:

A. All stators shall incorporate thermal switches in series to monitor the temperature of each phase winding. The thermal switches shall open at 125°C (260°F), stop the motor and activate an alarm.

B. A leakage sensor shall be available as an option to detect water in the stator chamber. The Float Leakage Sensor (FLS) is a small float switch used to detect the presence of water in the stator chamber. When activated, the FLS will stop the motor and send an alarm both local and/or remote. Use of voltage sensitive solid state sensors and trip temperature above 125°C (260°F) shall not be allowed.

C. The thermal switches and FLS shall be connected to a Mini CAS (Control and Status) monitoring unit. The Mini CAS shall be designed to be mounted in any control panel.

2.14 LIFT-OUT SYSTEMS:

A. The slide rail assembly system shall be self-sealing with a simple up and down motion required to remove and reinstall pumps in the basin.

B. The slide rail system shall be adjustable so that perfect vertical alignment can be obtained.

C. A pump slide rail assembly shall be supplied for each pump by the pump manufacturer and shall consist of Type 304 stainless steel upper guide rail brackets and pump guide rail assemblies of AISI Type 304 stainless steel structural tee sections. The stationary and movable parts of the discharge coupling assemblies shall be epoxy coated cast iron. The upper guide rail brackets shall be affixed to the concrete structure and shall be positioned over the upper end of the stainless steel guide rails while the discharge base elbow positions the lower end of the guide rails.

D. Each stainless steel rail shall support the pump at a distance of approximately four inches from the concrete floor to provide unrestricted flow of material into the pump. Each cast iron movable fitting, when in position, shall be held against the stationary fitting by the construction of the stainless steel rail, aligning the movable fitting to the base elbow for proper sealing of the two surfaces under pressure.

E. Each pump shall be fitted with a 316 stainless-steel lifting chain for pump installation and removal. The chain shall have a minimum breaking strength of 2,000 pounds, or a minimum safety factor of 2.5 whichever is greater.

F. Intermediate supports shall be provided for the discharge piping and for the pump slide rail brackets as indicated on the Drawings. Supports shall be fabricated of Type 304 stainless steel with Type 316 stainless steel anchor bolts and fasteners.

G. All fastening hardware, including anchor bolts, shall be AISI Type 316 stainless steel.

H. Pump slide rail assemblies shall be manufactured by the same manufacturer as the submersible wastewater pumps. Lift-out systems comprised of guide wires shall not be acceptable.

I. Each set of pumps shall be provided with a pump lift assistance device. The lift assistance device shall have a minimum capacity of 2.0 tons. The capacity shall increase as necessary based on the weight of the pumps. The pump lift device shall simplify the process of

lifting and lowering submersible pumps into and from the wetwell. The pump lift assistance device shall consist of a 316 stainless steel chain attached to a 316 stainless steel grip eye. The grip eye shall slide down the pump lift out cable and assist in the removal of the pump.

2.15 ALUMINUM ACCESS HATCHES:

Aluminum access hatches shall be sized so that the pumping units may be removed and replaced, as shown on the drawings. Installation shall be in accordance with manufacturer's instructions. Manufacturer shall guarantee against defects in material or workmanship for a period of five years.

2.16 ELECTRICAL & INSTRUMENTATION CONTROL REQUIREMENTS

A. All electrical equipment and control enclosure NEMA ratings shall be as specified in Section 11000 – Equipment General. All electrical equipment and controls shall be wired to NEMA 4X stainless steel terminal box. All control panels shall operate on 480 volt, 60 Hertz, three phase power. All vendor provided control panels shall be as specified in Section 11000 – Equipment General and coordinated with control strategies noted below.

B. The pump manufacturer shall supply the system control panels in accordance with this Section, Section 13421, Instrumentation and Control, and coordinated with control strategies noted below. The control panel shall be equipped with motor starters and supervisory devices complete, including all incidentals and appurtenances recommended by the manufacturer. The control panel shall include such ancillary devices and incidentals as required for a complete and functional system. All electrical work shall be performed in accordance with all applicable local, state and national electric codes.

C. Motor starters shall be as specified in Section 11000 – Equipment General.

D. All control panels shall be provided with terminal blocks for power wiring to and from the panel. The incoming terminal blocks shall be provided with a single magnetic circuit breaker disconnect switch. Fuse protected motor starters with thermal overloads shall be supplied for each motor.

E. All devices within the control panels shall be permanently identified. Nameplates shall be provided on the face of the panel and on the individual devices. Nameplates shall be made of laminated phenolic materials with a white face, black core and shall be clearly legible. Nameplates shall be affixed by 316 stainless steel machine screws.

F. The control panel shall be designed for starting and stopping of all equipment, drives and motors controlled by the panel and/or required for a complete and functional system. Automated/interconnected systems necessary for a complete and functional system shall be automatically controlled as required.

G. Provide alarm lights, sensor and all necessary related circuitry and incidentals as identified in Section 11000 – Equipment General and Section 13421 – Instrumentation and Control.

H. An alarm indicating light shall be provided on the electrical & instrumentation enclosure. The system shall include silencing provisions, but the alarm indicating lights shall remain lit until all alarm conditions have been satisfied.

I. A separate set of alarm contacts shall be provided for remote alarm indication and for interruption of ancillary drives and all other equipment required for a complete and functional system. Refer to this Section, Section 11000 – Equipment General.

J. Operational status and alarm statuses shall be relayed via contacts to the SCADA system. Provide any additional alarms as necessary or required for a complete and functional system.

2.17 PAINTING AND SURFACE PREPARATION:

A. The components of the pumps shall be thoroughly cleaned to remove mill scale, dirt, rust, grease, and other foreign matter. Motors, casings, receivers and other items customarily finished at the shop shall be given coats of paint filler and enamel or other approved treatment customary with the manufacturer.

B. Ferrous surfaces obviously not to be painted shall be given a shop coat of grease or other suitable rust-resistant coating.

C. Pumping units and appurtenances shall receive factory finish paint in accordance with the manufacture's standard paint for wastewater applications. Paint shall be suitable for submergence in typical municipal wastewater with temperatures as low as 4 degrees Celsius. Submit descriptive information and catalog cuts of the surface preparation and paint with the shop drawings. Frame mounting systems and appurtenances shall receive surface preparation and shop prime and finish paint per the manufacturer's recommendations. Finish paint to be applied in the field shall be provided by the manufacturer and applied by the Contractor.

D. All paint shall be as manufactured by Tnemec and shall be in accordance with all State and Federal regulations, which govern paint content (VOC's, etc.).

E. Stainless steel surfaces shall not be painted.

PART 3 - EXECUTION

3.01 INSTALLATION:

A. Installation of the pump packages and related appurtenances shall be performed in accordance with all written instructions furnished by the manufacturer.

B. After installation, Contractor shall clean all surfaces damaged in shipment or installation and shall touch up in the field with the same materials as original coatings.

3.02 MANUFACTURER'S REPRESENTATIVE SERVICES:

A. Manufacturer shall provide the necessary on-site services for each submersible wastewater pumping unit that is provided hereunder to include:

1. Observation of installation
2. Certification of proper installation
3. Alignment and adjustment as necessary
4. Startup and testing
5. Certify for use and start of warranty

B. The services of a factory-trained manufacturer's representative shall be provided as specified herein.

C. Services to be provided:

The service representative shall be responsible for complete component inspection on site after delivery and shall assist in the correct assembly of the components for a minimum period of one (1) eight-hour day. (Note: It is anticipated that all units will be installed, tested, and made operational at the same time, requiring a minimum of one (1) and potential as many as two (2) separate site visits by the manufacturer's representative for installation).

1. For inspection and check out of erected equipment – One (1) eight - hour day.

2. For start-up services and supervision – One (1) eight - hour day.

3. For complete instruction of the operating personnel – One (1) eight - hour day.

D. The minimum period of time herein specified does not relieve the manufacturer from providing sufficient time to satisfactorily complete the required service functions.

E. The manufacturer's representative shall certify in writing that each submersible wastewater pumping unit has been properly installed.

F. The Owner reserves the right to videotape the instruction of the operating personnel for future use in training.

G. The submersible wastewater pumping units shall be assembled and installed in strict accordance with the manufacturer's recommendations and as approved by the Engineer.

H. Checkout and testing shall be as described in Section 01750, EQUIPMENT CHECKOUT AND TESTING, and as described below.

3.03 FIELD ACCEPTANCE TESTS:

A. After installation of the equipment and after completion of the services of the manufacturer's representative the Contractor shall operate each unit to demonstrate its ability to pump without excessive vibration, motor overloading, or overheating. Each pump shall be operated for a sufficient period of time to permit thorough observation of all pump components.

B. Start-up and testing shall be conducted in accordance with Section 01752, STARTUP AND TESTING.

C. Notify Engineer in writing at least three days in advance of the tests. If testing cannot be conducted because of scheduling, unavailable service personnel, etc., the Engineer's fees for a second visit shall be paid by the Contractor.

D. All defects or defective equipment shall be corrected or replaced promptly at the Contractor's expense.

E. All final adjustments necessary to place the equipment in satisfactory working order shall be made prior to the tests.

F. If sufficient sewage is not available for the test, the Contractor shall provide water for testing. All labor and materials necessary for the test shall be furnished by the Contractor.

G. After installation, all piping shall be tested for tightness in an approved manner. Should leaks be found, faulty joints shall be repaired, even to the extent of disassembling and remaking the joint, and all defective pipe and fittings shall be removed and replaced in a manner satisfactory to the Engineer.

3.04 SPARE PARTS:

A. Provide a list of all spare and replacement parts and locations where they are available and can be purchased.

B. At a minimum the submersible wastewater pumping manufacturer shall provide the following spare parts:

a. One complete set of any and all special tools required.
b. One (1) complete set of gaskets required for each pump.
c. One (1) complete set of wearing rings for the impeller and pump casing, for each pump.
d. One impeller key, washer and lock screw.
e. Two (2) impellers.
f. One (1) mechanical seal repair kit.
g. One (1) backup mechanical float

C. The submersible wastewater pumping manufacturer shall also provide all other spare parts as recommended and as itemized in the operations and maintenance manual, for each submersible wastewater pump unit installed and ancillary system component installed.

END OF SECTION

SECTION 13421

INSTRUMENTATION AND CONTROL

PART 1 – GENERAL

1.01 DESCRIPTION:

A. SCOPE:

1. Provide, calibrate and test instrumentation and control systems specified for the pumping station. Provide equipment, installation services and appurtenances required to achieve a complete, integrated, and fully operational system.

2. Provide instrumentation as specified herein and as indicated on the Drawings.

3. Provide Pump Control Panel, Alarm Panel Terminal Box, and components as specified herein and as indicated on the Drawings.

B. Retain the services of Xylem Water Solutions, Inc. (System Supplier).

Xylem Water Solutions USA, Inc.
Nicholas Claudio
14125 South Bridge Circle
Charlotte, NC 28273
704.409.9747

1. The System Supplier shall provide the following minimum services:

a. Furnish all control panels including MultiTrode instruments, MultiSmart controllers, communication equipment, and associated appurtenances as specified herein. Installation of MultiTrode instruments, controllers, communication equipment and devices are by the Contractor. Pump control panel shall be CP-1.

b. Configuration of the MultiSmart Controller, cellular modem, communication and SCADA system at the Grass Island Treatment Plant.

c. Factory Acceptance Test: certification of the Pump Control Panel and Alarm Panel Terminal Box construction, and testing of the panels at the manufacturer facility. Factory Acceptance Test Procedure shall be prepared by the System Supplier for review by the Engineer.

d. Field Test: Field loop checks and functional operational test to ensure satisfactory operation of the Pump Control Panels and associated

instrumentation. Filed Test Procedure shall be prepared by the System Supplier.

e. After final test has occurred, a 30-day test period shall commence. During this time, all signals and alarms will be enabled. Any issues related to the Pump Control Panel and instrumentation will be communicated by the System Supplier.

C. The Alarm Panel (Autodialer) shall be provided by Security Specialists, Inc. (Alarm Company) and shall be installed as shown on the Drawings. The purpose of this panel is to automatically dial and send messages whenever critical process alarm conditions occur (Remote Dialout).

1. The Alarm Company responsibilities are the following:

a. Furnish alarm panel, radio, antennas, antenna cable, supports and accessories to the Contractor for installation at the pumping station as directed by the Alarm Company.

b. Configure the new auto-dialer and radio communication to initiate dispatch alarms for all programmed alarms. Coordinate with the OWNER and ENGINEER during configuration.

c. Install and terminate wiring between the Alarm Panel and the Alarm Panel Terminal Box.

d. Post-installation test: In conjunction with the Contractor and System Supplier, test all portions to ensure satisfactory operation of the autodialer. A Field Testing Procedure, prepared by the System Supplier, shall be submitted to the ENGINEER for approval prior to the test.

e. After post-installation test has occurred, a 30-day test period shall commence. During this time, all alarms will be enabled. Any issues realated to the alarm system will be communicated by the Alarm Company.

D. In order to centralize responsibility, it is required that all equipment provided under this Section be furnished by the System Supplier, unless otherwise noted, as specified herein. Contractor shall guarantee and be the source of information on all equipment, materials, and appurtenances furnished regardless of the manufacturing and supply source of the equipment.

E. CONTRACTOR COORDINATION:

1. Contractor shall coordinate all vendors and suppliers to achieve an integrated and tested system. Primary coordination activities include:

a. Review of submittals to confirm interfaces between suppliers and/or vendors are accurate, input and output points match, and discrepancies are resolved.

b. Review and Field Testing Procedure, oversee the testing and startup.

F. All equipment, materials, and appurtenances, as well as all signal and power wiring an cable rune and interconnections, shall be in strict accordance with the requirements of Division 16, Electrical, and in accordance with the manufacturer's recommendations, unless specified otherwise herein.

1.02 REFERENCES:

A. Standards referenced in this Section are listed below:

1. American National Standard Institute (ANSI)

2. Institute of Electrical and Electronic Engineers (IEEE)

3. The Instrumentation, Systems and Automation Society (ISA)

4. National Electric Code (NEC)

5. National Electrical Manufacturer's Association (NEMA)

6. National Fire Protection Association (NFPA)

7. Underwriters Laboratories, Incorporated (UL)

8. Local and State Building Codes and Ordinances

9. Permits: Contractor shall obtain and pay for all required permits, fees and inspections.

1.03 QUALITY ASSURANCE:

A. System Supplier Responsibilities:

1. The System Supplier shall assume the responsibilities specified below. However, execution of these specified duties by the System Supplier shall not relieve the Contractor of the ultimate responsibility for providing a functional instrumentation and control system equipment that meets all requirements specified.

a. Preparation, assembly and correction of all instrumentation and control equipment submittals in accordance with the Contract Documents and procedures.

b. Proper interfacing of the instrumentation and control equipment with field equipment, instruments, devices and panels, including required interfacing with package control systems furnished by other equipment suppliers and with the plant electrical system.

c. Review, approval and coordination with manufacturers, suppliers and other contracts of Shop Drawings for equipment, valves, and piping for purpose of ensuring proper interface of hardware, locations, and installation of in-line instruments and instrument taps.

d. Direct, detailed supervision of the installation of the instruments, panels, consoles, cabinets, wiring and other components as well as related wiring and piping connections.

e. Calibration, testing (factory and field) and start-up of the system.

f. Handling of all warranty obligations for the instrumentation and control system components.

g. Training of Owner's personnel in operation and maintenance (including calibration and troubleshooting) of the instrumentation and control equipment.

B. Provide only new materials throughout, conforming to standards established by Underwriter's Laboratories (UL), Inc., and so marked or labeled, together with Manufacturer's brand or trademark.

1.04 SUBMITTALS:

A. Shop Drawings:

1. General:

a. Shop Drawing submittals are to be in accordance with the requirements of the Contract Documents.

b. Shop Drawings shall be submitted in complete packages grouped to permit review of related items.

c. Proposed graphics layouts shall be submitted for review and comments. All graphic display and process reports shall be subject to modification from Contractors suggested format within the limits of the software package. Contractor shall perform such modifications as part of the Project Scope.

2. Submittal Requirements:

   a. Product information for all field instruments shall include the following:

      (1) Manufacturer's product name and model number, including manufacturer's name and address.
      (2) Instrument tag number from Contract Documents.
      (3) Data sheets and catalog literature. Provide data sheets as shown in ISA-S20-1981. For instruments not included in S20, submit data sheets using a format similar to those shown.
      (4) Description of construction features.
      (5) Performance and operation data.
      (6) Installation and mounting details, instructions and recommendations. Installation and mounting details shall be specific to the site and application.
      (7) Service requirements.
      (8) Dimensions.

   b. Control Panel Information:

      (1) Layout Drawings, include the following:
         (a) Front, rear, and internal panel views to scale.
         (b) Tag number and functional name of components mounted in and on panel, console or cabinet.
         (c) Product information on all panel components.
         (d) Nameplate location and legend including text, letter size and colors to be used.
         (e) Location of anchoring connections and holes.
         (f) Location of external wiring and/or piping connections.
         (g) Mounting and installation details (coordinate with actual application).
         (h) Proposed layouts and sizes of graphic display panels and alarm annunciator panels.
      (2) Wiring and/or piping diagrams, include the following:
         (a) Name of panel, console or cabinet.
         (b) Wiring sizes and types.
         (c) Piping sizes and types.
         (d) Terminal strip numbers.
         (e) Color coding.
         (f) Functional name and manufacturer's designation for components to which wiring and piping are connected.
      (3) Electrical control schematics in accordance with NFPA "79" Standards.

   c. Field wiring and piping diagrams, include the following:

      (1) Wiring and piping sizes and types.

(2) Terminal strip numbers.
(3) Color coding.
(4) Locations, functional name and manufacturer's designation of items to which wiring and/or piping are connected.
(5) Point-to-point wiring diagrams.

3. System Information

a. Control system description:

(1) A detailed block diagram showing system hardware configuration and identifying model numbers of system components, including MultiSmart, radio, antenna, alarm and SCADA Interface
(2) Monitoring and control description, failure modes.
(3) MultiSmart Input/output (I/O) point listing identifying all points and any spare points.
(4) SCADA data base listing, including all I/O points. Sort in a way to best present information to the Engineer and identify classifications, priorities and type of point.
(5) SCADA graphical screen modifications, popups, configurations.
(6) Complete alarm list, trigger for each alarm, and action if applicable.
(7) Polling Table identifying polling setups for the sites.
(8) MultiSmart configuration screens.

b. Software Description:

(1) Standard technical documentation covering all aspects of the MultiSmart system software functions and capabilities, including instruction set description and programming procedures related to monitoring, display, logging, reporting and alarming functions.
(2) Standard technical and instructional documentation covering software for utility, system support, system documentation, display, communications, data logging and storage and diagnostic functions.
(3) System Software Documentation: Prepare and submit two copies of preliminary software documentation within four weeks prior to expected initiation of the pump control panel factory testing. Submittal shall be for Owner and Engineer information only and shall not be subject to formal approval action.

B. Control System Operation and Maintenance Manuals:

1. Furnish Operation and Maintenance Manuals.

2. The Operation and Maintenance Manuals shall include the following:

a. Name, address and telephone number of the instrumentation and control System Supplier's local service representative.

b. Copy of all approved submittal information and system Shop Drawings as specified herein with corrections made to reflect actual system as tested and delivered to the Site for installation. Half-size black line reproductions shall be provided for all Shop Drawings larger than 11 by 17-inches.

c. Complete up-to-date system Control System Documentation.

d. Manufacturer's Original Copies of Installation, Assembly and Operations Manuals. Manuals shall include the following information:

(1) General descriptive information covering the basic features of the equipment.
(2) Physical description covering layout and installation requirements and all environmental constraints.
(3) Functional and operational descriptions covering the procedures for operation, start-up, shut-down.
(4) Maintenance procedures covering checkout, troubleshooting, and servicing; checkout procedures shall provide the means to verify the satisfactory operation of equipment, troubleshooting procedures shall serve as a guide in determining faulty components and servicing procedure shall cover requirements and recommended time schedule for calibration, cleaning, lubrication and other housekeeping and Preventive Maintenance procedures.
(5) Wiring, schematic and logic diagrams.

C. Record Drawings and Documentation:

1. Contractor and System Supplier shall revise Shop Drawing submittals to reflect as-built conditions in accordance with the requirements of the Contract Documents and the supplemental requirements below.

2. Six copies of revised Shop Drawings and documentation shall be submitted to the Engineer to replace out-dated drawings and documentation contained in the System Operation and Maintenance Manuals. Half-size black line sets shall be provided for all drawings larger than 11 by 17-inches. Specific instructions for out-dated drawing removal and replacement shall be provided with the Record Drawing submittal.

3. Half-size black line prints of wiring diagrams applicable to each control panel shall be placed inside a clear plastic envelope and stored in a suitable print pocket or container inside each control panel.

4. Final MultiSmart configuration files on flash disk, with easily identifiable names for each pump station.

5. Panel drawings in electronic files (AutoCAD 2014).

D. Reports:

1. Two copies of the following reports shall be submitted to Engineer:

a. Factory Test Reports.

b. Installation Inspection, Field Calibration, and Field Testing Reports.

c. Field Testing Procedure.

E. Maintenance Materials Submittals: Submit the following:

1. Spare Parts and Test Equipment

a. General

(1) Furnish the spare parts and test equipment as indicated below, identical to and interchangeable with similar equipment provided under this Section.
(2) For process sensors and other instruments, Supplier shall submit a separate quotation for recommended list of spare parts and test equipment.

b. Furnish the following spare parts:

Twelve of each type and size of fuse used in instruments.

c. Furnish the following test equipment:

Special calibration equipment required for system calibration.

2. Software:

Submit copies of programming and configuration files developed specifically for the Project.

1.05 GENERAL DESIGN REQUIREMENTS:

A. Power:

1. Each Pump Station operates on a 480VAC/3Ph service. Circuit breakers and transformer equipment as well as equipment associated with 3-phase power for the pumping equipment shall be coordinated and sized.

2. All electrically powered equipment and devices associated with the pump station control system shall be suitable for operation on 115 volt +/-10 percent, 60 Hz +/-2 Hz power.

3. Design all power supplies for a minimum of 130 percent of the maximum simultaneous current draw.

4. A circuit breaker shall be furnished for each item requiring electrical power.

B. Equipment Enclosure Ratings:

Provide control panels and instrumentation within enclosures with NEMA ratings in accordance with the Area Classification Schedule indicated on the Electrical Drawings.

C. Miscellaneous:

1. All instrumentation components shall be heavy-duty types, designed for continuous service. The system is to consist of equipment models which are currently in production. Design all logic and control loops to fail-safe.

2. Surge protection shall be provided for all instruments and all other control system components which could be damaged by electrical surges.

3. All relays with interconnections to field devices shall be wired through terminal blocks.

4. All panel mounted instruments, switches, and other devices shall be selected and arranged to present a coordinated appearance. All front of panel mounted devices shall be of the same manufacturer and model line.

5. All components furnished, including field and rear of panel instruments, shall be tagged with the item number and nomenclature indicated in the Contract Documents and/or approved Shop Drawings.

6. Ranges and scales specified herein shall be coordinated to suit equipment actually furnished.

1.06 STORAGE AND HANDLING:

A. Each manufacturer or supplier securely attach the tag number and instructions for proper field handling and installation to each instrument prior to packaging.

B. Protect equipment against shipping damage, dust, moisture, and atmospheric contaminants. Include a shipping label which contains the following information:

1. Tag number, equipment number and description.

2. Instructions for unloading transporting, storing and handling at the Site.

C. Receive control panels and instrumentation at the Site. Inspect control cabinets and instrumentation for damage in shipment and return damaged control cabinets and instrumentation to the manufacturer.

D. Do not store control panels and instrumentation outdoors. Provide dry, heated permanent storage facilities and pay storage costs.

1.07 IDENTIFICATION OF EQUIPMENT:

A. All electrical items shall be identified. Identification shall be in addition to the manufacturer's nameplates and shall serve to identify the items function and the equipment or system which it serves or controls. It shall be the responsibility of this Contractor to ensure all equipment is properly tagged in accordance with these specifications.

B. All new equipment shall be identified by means of laminated phenolic nameplates incised to show one-inch high, black letters on a white background. Labels shall be fastened by means of 3/16-inch diameter, round-head, stainless steel, self-tapping screws. In corrosive locations, labels shall be fastened by means of a silicon based adhesive. Equipment whose designations have been changed shall be relabeled accordingly.

C. Wires and cables shall be color coded, and identified by means of wire markers. Each control, signal and status wire shall be identified by a unique number. Number system shall reflect the actual designations used in the Work and shall be documented on the point-to-point wiring diagrams. Neatly coil all spare wiring at bottom of equipment and individually tag each spare wire and note its origin.

PART 2 — PRODUCTS

2.01 PUMP CONTROL PANEL:

A. General Provisions:

1. Rating: 480VAC/3Ph

2. Provide numbered terminal strips for terminating field wiring and wiring from other panels, unless otherwise shown or indicated.

3. Provide copper grounding studs for hardware requiring grounding.

4. Provide the following convenience accessories inside each pump control panel:

a. One 120 vac, 20-amp duplex, GFCI type receptacle, DIN Rail mount.

b. One 120 vac LED service light fixture and protective plastic shield.

c. One 120 vac switch, to turn on service light, mounted in outlet box with cover and located so that switch is easily accessible from access door.

5. Panel assembly shall be UL 508A listed.

6. Provide main circuit breakers with through the door handle.

7. Provide panels under this Section with 20% percent additional space requirements for future use.

8. Lower 12 inches of free standing panels shall be free of devices, including conduits and terminal strips, for ease of installation and maintenance.

9. For front-opening panels, install no device less than three feet above operating floor level, unless otherwise shown or indicated. For rear-opening panels, install no devices on the door.

10. Do not locate front panel-mounted devices requiring manipulation by operating personnel, such as pushbuttons, hand switches, controllers, and similar devices, higher than 5'-6" above finished floor.

11. Conduits located on either side of terminal strips shall have minimum clearance of 1.5 inches between Conduit and terminal strip.

12. Provide easily-accessible pocket built into panel door to enclose "as built" panel wiring diagrams.

B. Identification:

1. Provide laminated plastic nameplate for identification of panels. Use self-tapping stainless steel screws for fastening nameplates to panels. When self-tapping screws may degrade panel's NEMA rating, retain NEMA rating intact by using gaskets on each side of panel surface and use retaining plate on the panel back that is same size as nameplate. When gaskets and retaining plate are used, use full-penetration screws with nuts.

2. Panel identification nameplates shall have 1/2-inch high engraved letters.

3. Identify front panel-mounted devices with nameplates engraved with functional description of the device. Nameplate engraving shall be in accordance with the identification provided in the Drawings.

4. Identify terminal strips with nameplate engraved as "TB-XX" where "XX' is the numerical identification of terminal strip.

5. Identify terminals within each terminal strip with sequential numbers and wire numbers.

6. Internal panel wiring shall be color-coded and numerically identified with unique wire numbers affixed at each end of each wire. Color coding shall be in accordance with panel wiring color code table, below:

Panel Wiring Color Code Table

Description	Color
110 vac panel power before fuses or breakers	Black
Controlled 110 vac power (e.g., after relay contacts, selector switch contacts, and similar equipment)	Red
110 vac power source from devices external to panel	Yellow
110 vac neutral	White
24 vdc positive power from power supplies	Brown
24 vdc negative power from power supplies	
Controlled 24 vdc power (e.g. after PLC output contacts, relay contacts, and similar)	Blue
24 vdc positive power from devices external to panel	Orange
24 vdc negative power from devices external to panel	
24 vdc four to 20 mA DC signal cable	Grey with red positive, clear negative
Grounding wire	Green

C. Electrical Systems:

1. Power Source and Internal Power Distribution:

   a. General: Panel power supply source type, voltage, and circuit number shall be as shown.

   b. The panels shall be provided with an internal 120 VAC power distribution with separate circuit breakers, sized as required, to distribute power.

   c. Power Supply: Protection of all 120 VAC instrument power supply lines shall be provided.

2. Electrical Systems:

   a. Internal wiring shall be Type MTW and THW stranded copper wire with thermoplastic insulation rated for 600 volts at 85 degrees C for single conductors, color-coded and labeled with wire identification.

   b. For dc signal wiring, use shielded cable with 18-gage conductors. dc field signal wiring terminal strips shall be capable of handling wires up and including No. 12 size.

c. For ac power wiring, use No. 12 minimum AWG. For ac signal and control wiring, use No. 16 minimum AWG. For wiring carrying more than 15 amps, use sizes required by the NEC (NFPA 70).

d. Inside of panels, route dc signal wiring separately from power wiring with minimum separation distance of six inches.

e. Use covered conduits to route internal panel cables and wiring. Conduits in each section of panel shall be appropriately sized to accommodate the quantity of wires to be routed with a spare capacity of 40 percent.

f. Install wire troughs inside panels along horizontal or vertical routes to present a neat appearance. Angled runs are unacceptable.

g. Wiring that is routed without conduits shall be adequately supported and restrained to prevent sagging or other movement. Use of adhesive anchors to support or restrain wiring is unacceptable.

h. Terminate all internal panel wiring using screw type terminal blocks mounted on DIN rails. Fused terminal blocks shall have LED blown fuse indication. Terminal blocks for 4-20 mA signals shall be fused and knife disconnect terminal blocks. Terminal strips shall be identified as specified in this section. Identifiers shall be self-stick, plastic tape strips with permanent type, machine printed numbers. Hand-written labels are not acceptable.

i. Provide spare terminals equal in number to 20 percent of terminals used for each type of wiring (e.g., dc signal and ac power).

j. Provide ground terminals to terminate the shield wire of shielded cables. Termination of more than two shielded wires on a single ground terminal is unacceptable.

k. Provide a single copper bus bar with 5/16-inch diameter copper grounding stud to connect the panel to external ground. Panel's internal grounds shall be terminated to the bus bar.

l. When dc power or low voltage ac power is required, furnish and install in the panel required power supplies and transformers.

m. Provide complete wiring diagram of "as-built" circuitry enclosed in transparent plastic.

3. Surge Protection:

   a. General: Surge protection shall be provided to protect the electronic instrumentation and control system from surges propagating along the signal and power supply lines. The protection systems shall be such that the protection level shall not interfere with normal operation, but shall be lower than the instrument surge withstand level, and be maintenance free and self-restoring. Instruments shall be housed in suitable metallic cases, properly grounded. Ground wires for all surge protectors shall be connected to ground and where practical each ground wire run individually and insulated from each other.

   b. Provide formal lightning and surge protection devices for all signal lines, data highways, and power interfaces with control panels at remote Sites.

   c. Lightning and surge protection devices shall be standard manufactured products comprising multi-component networks or hybrid circuits. The units shall incorporate gas filled discharge tubes, and zener diodes providing full protection form line to line and from line to ground.

   d. For signal lines provide Telematic DP/SP or SD Series, as manufactured by MTL, or Trabtech as manufacture by Phoenix Contact, or equal.

   e. For AC power lines provide Telematic Model MA 20, as manufactured by MTL, or Trabtech as manufacture by Phoenix Contact, or equal.

4. Reduced Voltage Soft Start (Solid State) Motor Starters:

   a. Features:

      (1) Provide current limited starting.
      (2) Capable of starting when powered from a generator rated for non-linear loads. Start successfully with simultaneous voltage drop of 30 percent and frequency drop of 10 percent.
      (3) Full wave, 6 SCR power bridge type.
      (4) Stepless acceleration.
      (5) Isolation contactor opens when motor stops, on motor overload, and on drive fault.
      (6) SCRs fire only during starting and stopping.
      (7) Solid state motor overload relay with selectable Class 10, 20 or 30 curve and adjustable current setting.
      (8) Thermal protection to prevent overheating of starter.
      (9) Phase reversal, phase loss, and stall protection.
      (10) Torque boost.
      (11) Transient voltage surge suppression.
      (12) Constant voltage control power transformer.

b. Rating:

(1) Continuous current rating 115 percent of motor full load amps.
(2) Overload: 450 percent for 1 minute, 500 percent for 30 seconds, 600 percent for 5 seconds.
(3) Operate successfully at 230 VAC, AC, plus or minus 10 percent (except for starting transients), 3 phase.
(4) 60 Hertz, +1- 5 percent (except for starting transients).
(5) PRV of SCR 2.5 times nominal line voltage.
(6) Ambient temperature of 0 to 40 degrees C.

c. Adjustments:

(1) Voltage ramp or current limit select.
(2) Current limit: 200 to 500 percent of motor full load amps.
(3) Voltage start ramp: 1 to 60 seconds.
(4) Voltage stop ramp: 1 to 45 seconds.

d. Front of Panel Controls and Indicators:

Provide control switches and indicating lights as shown on the Contract Drawings.

e. Outputs:

(1) RUNNING
(2) FAULT
(3) NOT IN AUTO

f. Inputs:

START

5. Transformer: Provide voltage transformer where needed.

D. Control panels shall contain any and all equipment necessary to meet the functional requirements of the pump station control system. Recommended components and layout of devices is shown in the Contract Drawings.

2.02 PUSHBUTTONS AND INDICATING LIGHTS:

A. General:

1. Pushbuttons and indicating lights shall be supplied by one manufacturer and be of the same series or model type.

2. Type:

a. Pushbuttons and Indicating Lights: Heavy duty, oil tight, round.

b. Common, push-to-test circuitry shall be provided for each panel to simultaneously test all indicating lights on the panel using a single pushbutton.

3. Mounting: Flush mounted on control panel front, unless otherwise noted.

4. Size: 30.5 mm.

B. Pushbuttons:

Type: Provide momentary type pushbuttons required to perform intended functions specified and as shown.

C. Indicating Lights:

1. Type: Light-Emitting Diode (LED).

2. Common, push to test circuitry shall be provided for each panel to simultaneously test all indicating lights on the panel using a single pushbutton.

2.03 CONTROL RELAY:

A. Type: General purpose, plug-in Ice-cube type rated for continuous duty.

B. Construction Features:

1. Coil Voltages: 24 VDC or 120 VAC, as required.

2. Contacts: DPDT or SPDT.

3. Relays to have pilot light to show energized coil.

C. Products and Manufacturers: Provide one of the following:

1. Allen Bradley

2. Square D Company

3. Or equal

2.04 REMOTE SCADA CONFIGURATION:

A. Configuration of the communication to the existing SCADA system is by the System Supplier.

B. Integrate the new MultiSmart controller via the new cellular network into the existing SCADA system. Configure all monitoring and alarm signals to match existing graphical, alarming and network features.

C. Since new cellular modems will be utilized, it is anticipated that some IP addresses will change or other configuration changes that require coordination with the cellular provider will be necessary. Reprograming and verification of communication settings shall be performed as part of this project. Contact information for the cellular provider will be provided as necessary by the Town or Engineer.

2.05 LEVEL CONDUCTIVE PROBE:

A. General: The probe shall be constructed from PVC 32mm tubing with molded sensor units at regular intervals along the probe. Each sensor unit will be PVC injected to prohibit ingress of moisture, and the sensor material will be Avesta SM0254 stainless steel. The unit shall be rated for Class I, Division l, Groups C&D environments.

B. Mounting:

1. The probe will be mounted in a turbulent area of the wet well, suspended on its own cable and connected to a 6mm stainless steel hook which would hang from a 30mm stainless steel angle containing a polyurethane squeegee pad positioned in the opening into the wet well, so that the probe can be removed without entering the wet well. Provide an extended bracket mounting kit if required.

2. The squeegee will have a 30mm hole and slot, enabling the probe to be pulled through and cleaned.

3. Probe cable shall be run in a separate conduit away from any high voltage cables.

C. C. Sensors:

1. 10 sensors will be spaced along the length of the probe assembly, and each will be individually connected to a correspondingly numbered PVC/PVC .75mm flexible cable.

2. The molded sensor unit will contain two Avesta sensors mounted on opposite sides of sensor unit. Each Avesta sensor will be 24mm high and no wider than 2 mm, and will protrude from the surface of the PVC.

3. The probe shall be pressure injected with an epoxy resin to encapsulate all internal components and connections to form a rigid, homogenous unit.

4. Each sensor unit containing the two Avesta sensors will be rotated 90 degrees to the previous sensor unit to eliminate tracking between sensors.

D. Cable:

1. The cable will be encoded with number and text along the entirety of the cable and at intervals not greater than 200mm, for identification. This cable will be dark blue in color, with the cores light blue.

2. The flexible cables shall be capable of supporting the weight of the probe and cable, without the need for additional support.

3. The cable shall be secured to the top of the probe by a synthetic rubber compression fitting.

E. Manufactures:

MultiTrode Probe by MultiTrode. No exceptions.

2.06 LEVEL SWITCH – FLOAT TYPE:

A. General: The device shall be mercury free, capable of detecting fluid level and initiating a signal.

B. Type: Direct acting float.

C. Required Features:

1. Sealed DPDT control switch (rotating steel ball type), rated for 5 amps at 120 volts. Ball shall be hermetically sealed in a steel capsule and epoxy sealed in the float housing.

2. High impact, corrosion resistant, polypropylene float material.

3. Heavy duty, flexible 18 gauge, 3 connector, neoprene jacketed cable with waterproof connection.

4. Not sensitive to rotation.

5. Operating Temperature: Up to 140°F.

6. Provide cable weight or mounting bracket to suit installation.

7. Cable length: 50 feet.

D. Product and Manufacturer: Provide one of the following:

Flygt tear drop style float.

2.07 BACKUP LEVEL FLOAT CONTROL SYSTEM:

A. General: For Pump Station Control System, provide components to allow backup float control should the Pump Station Control System Controller (MultiSmart Controller) fail. The backup float control system shall consist of two floats and relays as required to perform the following actions:

1. Activation of the High Level Float: If the High Level Float activates, both pumps shall turn on with a ten second delay between pump starts. They shall keep pumping until the Low Low Level Float is activated.

2. Activation of the Low Low Level Float: If the Low Low Level Float activates, both pumps shall shut off. They shall remain off until the High Level Float is activated.

B. Provide one of the following:

MultiTrode MTR and MTRA backup control system relays.

2.08 WIND MONITOR:

A. General: Shall measure wind speed and direction

B. Required Features:

1. Range: 0-224mpH, 0-360 degrees.

2. Powered by 24VDC power supply

3. Provide 4-20mA loop powered signal outputs for wind speed and direction

C. Product and Manufacturer:

Young Model 05103-L. No Exceptions.

2.09 TEMPERATURE LOW SWITCH:

A. Set point Range: -30°F to 100°F

B. SPDT 120VAC Rated Contacts

C. Wall Mounted

D. Product and Manufacturer:

PECO Industrial Controls or equal.

2.10 3 PHASE VOLTAGE MONITOR:

A. General: Unit shall protect against phase loss, phase reversal, overvoltage, undervoltage and unbalance voltage.

B. This shall be separate and intendent unit in addition to the Multi smart phase monitoring

C. Required Features:

1. Line Voltage: 200 — 480 VAC +/-15%, 60 Hz.

2. Output Contact: 10 A resistive @ 240 VAC, SPDT.

3. Mounting: Plug-in socket rated 600 VAC.

4. Fault LED indicator.

D. Products and Manufacturers: Provide one of the following:

ABB 813S. No exceptions.

2.11 ELAPSED TIME METER (HOUR METER)

A. General: Unit shall be a powered, non-resettable time indicator, with easy to read analog figures.

B. Required Features:

1. Power: 120 VAC.

2. Accuracy: Within one percent.

3. Capacity: Up to 99,999.9 hours (automatic recycle at zero); one-tenth hour resolution.

4. Operating Temperature: -40°C to +68°C.

5. Sealed against dirt and moisture.

6. Tamperproof.

7. Shock resistant.

8. Panel mountable.

9. Nameplate below display shall read "TOTAL HOURS".

C. Products and Manufacturers: Provide one of the following:

1. Dynapar/Veeder-Root, 7795 Series.

2. Cutler-Hammer, E42DIR Series.

3. Or equal.

2.12 CELLULAR MODEM:

A. General: Intelligent 3G Ethernet Gateway that provides high-speed connectivity in a compact and sleek form factor. The modem shall handle rugged and robust applications.

B. Required Features:

1. Technology: CDMA EV-DO Rev. A with fallback to CDMA lx, CDMA IS-95.

2. High speed Ethernet port, Mini-USB.

3. Remote management.

4. Persistent 3G Network Connectivity.

5. IPsec VPN and GRE Tunneling.

6. Operating temperature: -22 to 158 Deg F.

7. Status LEDs

C. Accessories:

1. Mounting hardware as recommended by the manufacturer.

2. All necessary cables and connectors.

3. DC power supply.

D. Products and Manufacturers:

1. LS300, Sierra Wireless

2. Approved equal

2.13 CELLULAR ANTENNA

A. General: A high gain multi band 3G/4G antenna shall be provided to replace the existing antenna.

B. Required Features:

1. Frequency ranges:

   a. 700 — 800 MHz

   b. 824 — 960 MHz

   c. 1710 —1880 MHz

   d. 2110 — 2170 MHz

2. Minimum gain of 7.0 dBi in all ranges

3. Nominal Impedance: 50 Ohms

4. Rated wind velocity: Greater than 100 MPH

5. Temperature Range: -40° to 158° F

6. Vertical Polarization

7. Supply low loss cable length sufficient for installation. Field Verify. For cable lengths less than 40 feet use LMR-400 or equivalent. For cable lengths over 40 feet use a size sufficient enough to limit loss to no more than 1.5dB.

8. Mounting hardware: Mounting clamps, standoff hardware as recommended by the antenna manufacturer.

9. In-line coaxial cable surge protector shall be furnished for each cable. Furnish Polyphaser, or equal.

10. All necessary connectors shall be provided to allow for connection to a SMA-female cellular modem.

11. Antenna to be installed following manufacturer's recommendations and local building codes.

C. Products and Manufacturers:

1. Wilson

2. Approved equal

2.14 POWER SUPPLIES:

A. General: Power supply shall have a narrow and uniform design with battery charger.

B. Single Unit Required Features:

1. Input Power: 120 VAC ±10 percent, 60 Hz.

2. Output Power: 12 VDC or as required.

3. Output Current range: 0 - 4 Amps

4. Line/Load Regulation: ±0.5 percent.

5. Operating Temperature: -10°C to +50°C.

6. Humidity: Up to 90% at 25°C, no condensation

7. Response Time: COO.

8. Overload and over voltage Protection: Internal auto preset

9. Type of connection: Screw/plug connection.

10. Remote Fail Indication: Battery low under charge. Dry contact.

C. Products and Manufacturers: Provide one of the following:

1. Mean Well.

2. Or approved equal.

2.15 BATTERY

A. Provide two (2) rechargeable sealed lead acid battery to power the Multismart controller and sensors including the wind monitoring station at the Meadow Pump Station.

B. Required Features:

1. Nominal Voltage: 12 vdc

2. Capacity: 12 Amp hours

3. Output Frequency: 60 Hz ±0.5 Hz

4. Operating Temperature: -40°C to 60°C

C. Products and Manufacturers: Provide one of the following:

1. Power sonic

2. Or approved equal

2.16 INTRINSICALLY SAFE RELAY

A. General: Intrinsically Safe Relay shall electrically isolate circuits extending into Class I, Division I (Group A, B, C and D) hazardous areas from circuits in non-rated areas. Failures of the circuit within the hazardous area shall be indicated by illuminating a light emitting diode (LED) located on the face of the relay.

B. Required Features:

1. Contact design: one Normally Open (NO) and one Normally Close (NC), isolated contacts.

2. Contacts Rating: 8A at 110 VAC resistive, 5A at 30VDC resistive

3. Contact Cycle Rating:

a. Mechanical 10,000,000 operations

b. Electrical: 100,000 operations minimum at rated load

4. Electronic Module: Solid state components epoxy encapsulated in nylon shell.

5. Supply Voltage: 115 VAC 50/60Hz.

6. Supply Current: Relays energized, 1.7 VA.

7. Sensitivity: 0-470,000 ohms Maximum specific resistance.

8. Operation Temperature: -40°F to 150°F.

9. Time delay: 0.5 seconds rising level, 3 seconds lowering level.

C. Products and Manufacturers: Provide one of the following:

1. Phoenix Contact

2. Gems Sensors

3. Or equal

2.17 INTRINSICALLY SAFE DC BARRIER:

A. General: Intrinsically Safe DC Barrier shall electrically isolate DC circuits extending into Class I, Division I (Group A, B, C and D) hazardous areas from circuits in nonrated areas. To be used with the High-High level signal to the Alarm Panel.

B. Required Features:

1. Current Input: 150 mA

2. Voltage Input: 15 VDC

3. Max. end to end Resistance: 119 ohms

4. Fuse rating: 100 mA

5. Operation Temperature: -4°F to 140°F

6. DIN Rail Mount

C. Products and Manufacturers: Provide one of the following:

1. Eaton Crouse-Hinds MTL 7715+ shunt diode safety barriers

2. Or equal

2.18 PUMP CONTROL SYSTEM:

A. General: The Pump Control System Controller shall provide control of the pump station, with an intuitive user-interface. The product shall come with pre-built configuration parameters which are selectable via the user interface and a PC configuration program, including but not limited to:

1. Set point adjustment for pump activation/deactivation and level alarms.

2. Level sensing conductive probe

3. Selectable between fill / empty

4. Station optimization including

a. Max off time (odor reduction)

b. Maximum pumps to run (overload protection)

c. Maximum starts per hour (pump protection)

d. Inter-pump start and stop delays

e. Maximum run time (turn off inefficient or partially blocked pumps)

f. Blocked pump detection

g. Well clean out (periodic pump down to snore point)

5. Multiple profiles of set points for spill management, off peak pumping, tariffmg, etc.

6. Data logger. Support both USB and SD devices for configuration and log file storage.

7. 3-phase supply monitoring and supply protection

a. Under-voltage

b. Over-voltage

c. Phase fail

d. Phase rotation

8. Monitoring of dc supply, battery voltage, and internal temperature.

9. Motor protection & power module including:

a. Over- and under-current

b. Ground/earth fault

c. Insulation resistance testing for motor windings

d. KVA, kW and power factor measurement

B. Programmability:

The product shall have the option of IEC61131-3 PLC programming language to interact with (or replace) pump control module.

C. Input/Output points:

1. The 110 shall be expandable to many hundreds of I/O points per unit. Available I/O types shall include:

   a. Digital inputs (voltage free input), also configurable as counters. The Digital Inputs shall be selectable as pump station specific I/O to reduce components in the panel and therefore save cost

   b. Digital outputs (240V, 5A resistive)

   c. Analog inputs (10bit)

   d. Analog outputs (10bit)

2. Specific I/O for motor protection and monitoring: The product shall have sufficient I/O cards to minimize additional components which include:

   a. Insulation resistance test (IRT) to 1000v

   b. 3-phase current monitoring, derived from CT's, 0.5% resolution

   c. 3-phase supply monitoring, 0.5% resolution. Up to 630V phase to phase

D. Operator Interface Terminal:

1. The Pump Control System shall include a Operator Interface Terminal (OIT)for operations and configuration. The display shall provide status of most aspects of the pump station, control of pumps, resetting of faults, and configuration of parameters.

2. Status: The following parameters shall be displayed on the main screen:

   a. Level

   b. Set points for alarms and pump start/stop

   c. Pump running/stopped

   d. Pump available

   e. 3-phase current for each motor (when motor protection card installed)

   f. Pump fault

   g. 3-phase supply

3. The screen shall have buttons to allow the user to access Faults, History, Information and Settings.

4. Information screens: The following parameters shall be available via a user key press from the main screen:

   a. Hours Run accumulators for each pump and the pump station.

   b. Starts accumulators for each pump & the station with the following comparisons.

      (1) This hour, last hour
      (2) Today, yesterday
      (3) This week, last week
      (4) Total hours run

   c. Flow values, either derived from calculations or via a flowmeter, including inflow, pump flow rate, total volume.

   d. Any overflow information, including start time, duration, estimated volume.

   e. Insulation resistance value for each motor.

   f. Status of all I/O

E. Control:

1. The following aspects of the system, as a minimum, shall be controlled intuitively through the OIT:

   a. Pump mode, for each pump, between Auto/ Manual (Hand)/ Off

   b. Pump fault reset

   c. Level alarm reset

F. Fault screen:

1. The main screen shall include a Fault button which takes the user to a Fault screen and allows them to check all current and unacknowledged alarms.

2. The fault screen will detail the fault (e.g. contactor fail, seal fault, motor overtemp, over-current, etc.) along with date/time each fault occurred and cleared.

3. A reset option for a fault will be presented to the user when faults can be acknowledged/reset.

G. History screen:

The main screen shall include a History button which takes the user to a History screen and allows them to check all faults and events along with date/time. The History screen shall include the ability to filter to view only faults, only events, or narrow down to events relating to specific types of data.

H. Configuration:

1. The user interface should allow intuitive configuration of the system, including as a minimum:

   a. Set-points, including alarm and pump set points

   b. Enable/disable level alarms (so that for example, the low level alarm can be easily activated or deactivated)

   c. Start, stop and alarm delays

   d. Alternation/ fixed sequence and grouping of pumps where necessary

   e. Configure I/O

      (1) Assign primary/backup level to any input, e.g. 4-20mA or conductive probe.
      (2) Assign pre-defined (or user-defined) faults, e.g. thermal overload, contactor fail, to any digital input.
      (3) Zero and span analog inputs.
      (4) Set Digital outputs to change state with any digital tag in the system.
      (5) Set Analog outputs to follow any analog value, including primary level.

   f. Fault configuration:

      Set each fault as either: display only; manual/SCADA restart; auto restart with configurable restart time.

   g. Pump station optimization parameters such as:

      (1) Max off time (odor reduction)
      (2) Maximum pumps to run (overload protection)
      (3) Maximum starts per hour (pump protection)
      (4) Inter-pump start and stop delays
      (5) Maximum run time (turn off inefficient or partially blocked pumps)
      (6) Well clean out (periodic pump down)

h. Supply protection

(1) Under- and over-voltage alarm points
(2) DC-supply alarm point

i. Motor protection parameters, includingunder-and over-current, ground/earth fault, phase fail. (only for motor bigger than 10HP)

j. Communications ports, speeds and addresses.

2. The configuration of the unit will also allow the user to save a known good configuration on the unit itself that they can revert back to at any time.

I. Communications:

1. Physical: The product shall include:

a. Ethernet 10Mbit/s

b. Multiple RS232 ports to 115kBit/s

c. Multiple RS485 ports to 115kBit/s

2. Media: The system shall support a variety of communications networks.

3. Protocols: The communications protocol will be an open protocol such as DNP3 which includes:

a. Change of state reporting.

b. Native date/time and quality stamps for each data point.

c. Event buffering for different classes of data. Modbus master/slave protocol will also be provided.

J. Manufactures:

1. MultiSmart Pump Controller by Flygt

2. No substitutions

2.19 SOURCE QUALITY CONTROL:

A. General:

1. Factory Test:

a. Representatives of OWNER and ENGINEER shall have the option to witness factory test at testing facility during operational test of equipment, either for individual units or as an integrated system. Give minimum of 30 days notice to ENGINEER prior to the proposed testing date so that arrangements for test witnessing can be made. Presence of OWNER and ENGINEER during testing does not relieve CONTRACTOR from complying with the Contract Documents and shall not imply acceptance of equipment. When factory tests have been successfully completed, a submit factory test report to ENGINEER.

b. CONTRACTOR shall cover the cost of the factory test including accommodations, transportation, food and retesting of failed equipment for one representative.

c. Do not ship the equipment until obtaining ENGINEER's acceptance of factory test results.

B. Factory Inspection:

1. Inspect each panel, console, device, and cabinet before testing and before shipping. Inspection shall include, but not be limited to the following:

a. Verify all "Approved as Corrected" comments on Shop Drawings were implemented.

b. Verify presence of and accuracy of nameplates and tags.

c. Verify that wire sizes and color-coding comply with the Contract Documents.

d. Verify presence of terminal blocks, terminal block numbers, and required quantity of spares.

e. Verify annunciator window engravings and quantity of spare windows comply with the Contract Documents.

f. Verify proper wiring practices and grounding.

g. Verify presence of applicable items specified in this Section.

C. Panel Operational Testing:

1. Test all input/output components to verify that internal panel wiring is properly terminated at correct locations. Verify initial ranges and settings.

2. Test all system hardware and software to verify proper operation as standalone units. Test shall include, but not be limited to, the following:

   a. Power fail/restart tests

   b. Diagnostics checks

   c. Demonstrate that all specified equipment functional capabilities are working properly.

   d. Check and verify process displays are in accordance with approved Shop Drawings.

3. Test components and devices requiring data transmission to verify that communication between such components is working properly. Verify communication by using the same media required for the completed system at the Site as indicated in the Contract Documents.

4. Perform integrated system test with all system equipment and simulated inputs/outputs connected to verify that equipment is performing properly as an integrated system.

5. Simulation devices shall be of suitable quality to not mask control panel defects.

PART 3 – EXECUTION

3.01 INSPECTION:

Examine conditions under which the Work will be installed and notify ENGINEER in writing of conditions detrimental to proper and timely completion of the Work. Do not proceed with the Work until unsatisfactory conditions are corrected.

3.02 INSTALLATION:

A. Installation of Instrumentation:

1. Secure field-mounted instruments to stands or brackets in accordance with manufacturer's recommendations, approved or accepted (as applicable) submittals, and the Contract Documents.

2. Locate sensors where shown on the Drawings. Confirm exact locations in the field with ENGINEER.

3. Install all devices so that devices are readily accessible for service and do not cause potential hazards.

B. Services and Operator Instructions:

1. Provide repairs or replacement of defective materials, equipment or workmanship, including with respect to equipment, the services of factory-trained servicemen.

2. In addition to the calibration required for check-out, provide two additional calibrations on all instruments. The first re-calibration shall be approximately six months after acceptance of the system, and the second shall be approximately eleven months after acceptance. As part of each calibration, provide two copies of the calibration sheets, a detailed list of deficiencies (should any be found), and a statement that the entire system is in proper operation and condition (except for the deficiencies noted) and shall be turned over to the OWNER.

3.03 PROCESS CONTROL DESCRIPTIONS:

A. The pump operating control logic is summarized in the below table.

Float	Multitrode	Pump Operation and Alarms
LSH-101		Dedicated float wired to Alarm Panel for high level alarm purpose
	High	When level hits high level, PLC shall alarm a High Level
LSH-102		Backup Control Relay shall turn both pumps ON
	Lag Pump ON	When level hits this set point, turn ON Lag Pump. PLC shall alarm. Under normal condition, water level stays below this Lag Pump ON set point.
LSH-103		Backup Control Relay shall turn Lead Pump ON
	Lead Pump ON	When level hits this set point, turn ON Lead Pump
LSH-104		Backup Control Relay shall turn both pumps OFF
	Pumps OFF	Turn both pumps OFF
LSH-105		Dedicated float wired to Alarm Panel for low level alarm purpose

B. Every pump On/Off cycle, Lead Pump shall become Lag pump and vice versa.

C. Pumps shall not re-start when fault clears on its own (requires operator reset for re-start). Operator Reset locally in the control panel or remotely through the Multismart controller.

3.04 WITNESSED LOCAL SYSTEM CHECKOUT:

A. The purpose of the LOCAL test shall be to confirm the pump station control system operates as designed. Contractor shall furnish the following documentation to the Owner and Engineer as proof of readiness to begin checkout.

1. Completed calibration sheets and procedures outlined in 3.4.A and 3.4.0 for each installed instrument showing three point calibration, signed by a factory authorized serviceman.

2. Test instruments, as required.

B. Contractor shall give written notification to the Owner and Engineer 14 days in advance of his readiness to begin system checkout and shall schedule system checkout on dates agreed on by the Owner and Engineer.

C. Contractor shall have a written procedure for checkout, listing each and every point and the expected indication, control function of the pump control system, alarm and/or remote dialout at/from SCADA. This written procedure shall be submitted to the Owner and Engineer for approval one month prior to the beginning of checkout. Note that as part of this test, each alarm shall be individually tested and both the alarm and its associated restore confirmed at SCADA.

D. Engineer and Town may be present during all system checkout activities.

E. The following minimum system checkout activities shall be performed:

1. Test all operation functions as described in section 3.3.

2. BACKUP operation shall be tested for at least 2 consecutive cycles.

3. Alarm testing: Follow the following procedure to test alarms

a. Recreate or simulate an alarm.

b. Check if the alarm is available on the Pump Control Panel.

c. Verified that the alarm has been sent to the WWTP through the cellular telemetry system and it is been display correctly at the screen. This applies to status indication as well.

d. Verify that the alarm has been notified as configured: phone call or text message.

e. Verify that the alarm can be properly acknowledged using the confirmation code.

f. Verify that the unacknowledged alarms escalate all the levels as required by the Owner.

g. Verified that the alarm has been sent out though the Alarm Panel and it has been received at the Alarm Company, a page is received at the WWTP and a restored is received when the condition is cleared.

F. It shall be Contractor's responsibility to record the results of systems checkout, effect whatever remedial action is required and arrange for re-inspection to review said remedial action, at no additional cost to the Owner.

G. The completion of the above does not relieve Contractor from completion of work specified elsewhere in this Section.

3.05 WITNESSED REMOTE SCADA SYSTEM CHECKOUT:

A. The purpose of the REMOTE SCADA test shall be to confirm the pump station remote SCADA monitoring, alarming, logging and notifications functions meet the design intent. Contractor shall furnish the following documentation to the Owner and Engineer as proof of readiness to begin checkout.

Completed LOCAL SYSTEM CHECKOUT sheets.

B. Contractor shall give written notification to the Owner and Engineer 14 days in advance of his readiness to begin system checkout and shall schedule system checkout on dates agreed on by the Owner and Engineer.

C. Contractor shall have a written procedure for checkout, listing each and every point and the expected indication, control function, alarm and/or remote dialout at/from SCADA. This written procedure shall be submitted to the Owner and Engineer for approval one month prior to the beginning of checkout.

Note that as part of this test, each alarm shall be individually tested and both the alarm and its associated restore confirmed at SCADA.

D. At the system checkout, Contractor shall have:

1. Completed Local System Checkout as described in 3.4.

2. Demonstrated SCADA configuration as complete.

E. It shall be Contractor's responsibility to record the results of systems checkout, effect whatever remedial action is required and arrange for re-inspection to review said remedial action, at no additional cost to the Owner.

F. The completion of the above does not relieve Contractor from completion of work specified elsewhere in this Section.

3.06 SERVICES AND OPERATOR INSTRUCTION:

A. Contractor shall furnish all repairs or replacement of defective materials, equipment or workmanship, including with respect to equipment, the services of factory-trained servicemen.

B. Contractor shall furnish, as part of this Contract, a one-year service contract covering parts and labor for the complete system. Service contract shall be with nearest "Authorized dealer/service representative" for on-Site service.

C. In addition to the calibration required for checkout, provide two additional calibrations on all instruments. The first re-calibration shall be approximately six months after acceptance of the system, and the second shall be approximately eleven months after acceptance. As part of each calibration, provide two copies of the calibration sheets, a detailed list of deficiencies (should any be found), and a statement that the entire system is in proper operation and condition (except for the deficiencies noted) and shall be turned over to the Owner.

3.07 FIELD QUALITY CONTROL:

A. Field verify the calibration and performance of each instrument prior to start-up of the associated equipment, and document on a separate sheet for each.

1. For each calibration certification sheet, include the following information:

a. Project name.

b. Tag number and description.

c. Manufacturer.

d. Model and serial number.

e. Date, time and person who performed calibration.

f. Calibration data to include.

(1) Input, output, and error at 0, 25, 75, and 100 percent of span for analog instruments.
(2) Switch setting, contact action and deadband, if applicable, for discrete elements.

g. Space for comments.

h. Space for sign off and date.

2. Contractor System Check-Out and Start-Up Responsibilities:

   a. Contractor shall retain the services of the System Supplier to supervise and/or perform check-out and start-up of all system components. As part of these services, the System Supplier shall include for those equipment items not manufactured by him the services of an authorized manufacturer's representative to check the equipment installation and place the equipment in operation. The manufacturer's representative shall be thoroughly knowledgeable about the installation, operation and maintenance of the equipment.

   b. Check and approve the installation of all instrumentation and control system components and all cable and wiring connections between the various system components prior to placing the various processes and equipment into operation and/or scheduling any witnessed tests.

   c. Conduct a complete system checkout and adjustment, including calibration of all instruments, tuning of control loops, checking operation functions, and testing of final control actions. When there are future operational functions included in the Work, they should be included in the system checkout. All problems encountered shall be promptly corrected to prevent any delays in start-up of the various unit processes.

   d. Contractor shall provide all test equipment necessary to perform the testing during system checkout and start-up.

   e. Contractor and System Supplier shall be responsible for initial operation of monitoring and control system and shall make any required changes, adjustment or replacements for operation, monitoring and control of the various processes and equipment necessary to perform the functions intended.

   f. Contractor shall furnish to the Engineer certified calibration reports for field instruments and panel mounted devices specified in this Section as soon as calibration is completed.

   g. Contractor shall furnish Engineer an Installation Inspection Report certifying that all equipment has been installed correctly and is operating properly. The report shall be signed by authorized representatives of both Contractor and the System Supplier and shall provide proof of readiness for witnessed tests.

   h. Instrumentation and Control System Witnessed Field Tests:

      Following the instrumentation and control system checkout and initial operation, Contractor shall perform system test that may be witnessed by Engineer, Owner or both to verify that all equipment and programmed software is operating properly as a fully integrated system, and that the intended instrumentation and control functions are fully implemented and

operational. Any defects or problems found during the test shall be corrected by Contractor and then retested to demonstrate proper operation.

i. Operational Availability Demonstration: Following demonstration of all system functions, the instrumentation and control system, including field sensors/transducers and instruments, and telemetry system shall be running and fully operational for a continuous 72 hour period.

3.08 INSTRUMENTATION AND CONTROL SYSTEM TRAINING:

A. General:

1. Contractor shall retain the services of the System Supplier to provide operation and maintenance training for all instrumentation and control system equipment as specified herein.

2. For equipment items not manufactured by the System Supplier, he shall provide for on-Site training by an authorized representative of the equipment manufacturer as part of his services. The manufacturer's representative shall be fully knowledgeable in the operation and maintenance of the equipment.

3. Contractor shall be responsible for all costs associated with training and shall provide all required materials, texts and required supplies.

4. Training shall conform to the requirements of Section 01821, Instruction of Operations and Maintenance Personnel.

B. On-Site Training:

1. Primary Sensors and Field Instruments:

Provide on-site operation and maintenance training by System Supplier and the equipment manufacturer representatives prior to placing the equipment in continuous operation. The services of equipment manufacturer's representatives shall be provided for a minimum of 4 hours for each type of instrument.

2. Training shall accomplish the following:

a. Provide instruction covering use and operation of the equipment to perform the intended functions.

b. Provide instruction covering procedures for routine, preventive and troubleshooting maintenance, including equipment calibration.

c. Explain procedures for placing the equipment in and out of operation and explain necessary actions and precautions to be taken regarding the overall plant monitoring and control system.

d. Provide classes and field training as to how to change process control and alarm set points in all microprocessor based controllers and transmitters. Maintenance personnel shall be trained to enter passwords, programming or configuration data, etc.

END OF SECTION

SECTION 15109

PORTABLE DAVIT CRANE SYSTEM

PART 1 - GENERAL

1.01 WORK INCLUDED:

The Contractor shall furnish and install a portable davit crane system as indicated on the drawings and in the specifications and as herein specified, including all labor, material, equipment and incidentals required.

1.02 QUALITY ASSURANCE:

Davit crane system shall be the product of one manufacturer who has had long experience in the design of davit cranes and whose products have proven reliable in service in similar installations over a minimum of 5 years.

1.03 SUBMITTALS: IN ACCORDANCE WITH REQUIREMENTS OF GENERAL SPECIFICATIONS, SUBMIT THE FOLLOWING:

Submit to the Engineer for review, six (6) sets of complete shop drawings plus operating and maintenance instructions for each item furnished.

PART 2 – PRODUCTS

2.01 DAVIT CRANE

A. The davit crane shall be Series 5PT10 as manufactured by Thern, Inc., or approved equal. The davit crane shall be designed with an ultimate design factor greater than 3:1 for all components including the lifting winch and base.

B. The davit crane shall have a variable lift capacity based on boom length, to vary between 1200 pounds lift capacity with the boom in the shortest length, and 550 pounds with the boom fully extended. The boom shall telescope up to 4 different lengths allowing a maximum hook reach of at least 66 inches measured from mast center to hook center. The hook height shall be adjustable by moving the boom up or down between horizontal and 45 degrees from vertical, with a minimum of 22 inches between the lowest position and the highest position with the boom fully extended. The boom angle shall be adjustable at all times, with a hand operated screw jack acting to raise or lower the boom between horizontal and 45 degrees from vertical. The wire rope shall pass over a sheave at the end of the boom. The sheave shall have a bronze bearing. The minimum height of the boom shall be 28 inches between mounting surface and the underside of the boom in all-base configurations. The mast and boom shall rotate 360 degrees in

the base on pin bearing and bearing sleeve, with a rotational handle attached to mast to facilitate rotation.

C. The davit crane components shall be fastened together using stainless steel clevis style pins, secured with lynch pins with lanyards fastening the lynch pins to primary structural components. The davit crane shall break down into portable components with no single component weighing more than 100 pounds. Carrying handles shall be welded to mast and boom. All nuts, bolts and other appurtenances shall be stainless steel.

D. The lifting winches shall be located such that the center point of the drive shaft is behind the centerline of the mast. The davit crane shall be labeled with a non-corrosive metal identification plate labeled or imprinted with the manufacturers name, model number, serial number, capacity rating, and other essential information.

2.02 DAVIT CRANE BASE

A. The crane base shall allow for removal of the mast. The crane base shall have a pin bearing to support the end of the mast and a Nylatron GSM bearing sleeve to support the mast at the top of the base.

B. The base shall be pedestal type and shall be installed in the location shown on the drawings.

2.03 CANE AND BASE FINISH

The crane boom, mast and base shall be fabricated from steel meeting ASTM standards. The crane boom, mast and base shall have a corrosion resistant finish. The crane boom, mast and base shall be fabricated from minimum AISI 304/304L stainless steel, with electro-polish finish.

2.04 MANUAL LIFTING WINCH

The lifting winch shall have machine cut worm gears operating in an enclosed oil bath, cast aluminum gear case and drum construction, an adjustable handle that mounts securely to the drive shaft for manual operation, bronze and radial ball bearings, pressure plate, and a positive load holding mechanical brake able to stop and hold the load automatically if the winch handle is released. The lifting winch shall include a quick disconnect feature allowing quick attachment and detachment of wire rope equipped with a swaged ball anchor. The lifting winch shall be equipped with a hex drive input to allow drill drive operation with a maximum rated drill speed of 400 rpm.

2.05 WIRE ROPE:

A. Wire rope construction shall be 7 x 19 type 304 stainless steel cables.

B. Latch type hooks shall be used and shall be either non-rotating eye type or swivel type to allow 360-degree rotation under all load conditions. Hooks shall be heat-treated drop forged type 304/316 stainless steel.

C. Provide wire rope hook assemblies for each submersible pump assembly as shown on drawings.

D. Provide wire rope hanging brackets to mount pump cables to structure at each pump location. Brackets shall be 316 S.S.

PART 3 - EXECUTION

3.01 INSTALLATION:

All davit crane systems shall be carefully erected and supported in their respective positions free from all distortion and strain. Care shall be taken to prevent damage or injury to the davit crane systems during handling and installation. All material shall be carefully inspected for defects in workmanship and materials, all debris and foreign material cleaned off and out of davit crane systems, all operating mechanisms operated to check their proper functioning, and all nuts and bolts checked for tightness. Any equipment, which does not operate easily or are otherwise defective shall be repaired or replaced at the Contractor's expense.

3.02 FIELD PAINTING:

Field painting of davit crane systems shall be as required by the engineer.

END OF SECTION

SECTION 15493

PERIMETER OVERFLOW RECIRCULATION SYSTEM

PART 1- GENERAL

1.01 WORK INCLUDED:

A. Perimeter Recirculation System

1. Manufacturer shall furnish and install a perimeter recirculation system for the swimming pool as shown on the project drawings and specified herein.

2. The gutter shall be a prefabricated stainless steel gutter system.

3. Lane anchors and vinyl depth markers for gutter system.

4. Welding of competitive pool equipment anchors to gutter.

B. Basic Performance Requirements

1. The gutter system shall provide uninterrupted skimming action, at the handhold, around the perimeter of the entire system in accordance with the intent of state and local Department of Health codes. Installation tolerance of the handhold, around the entire perimeter, shall be ±1/16-inch.

2. The gutter system shall have the capacity to convey 100% of the recirculation rate of the pool in question without flooding. Flooding shall be defined as the water level in the overflow channel occupying the same elevation as the channel grating at any point in the system's perimeter.

3. The perimeter recirculation system shall be capable of maintaining channel flow and surface skimming under all conditions of normal operation without any water discharged to waste except when cleaning the filters or emptying the pool.

C. Configuration Selections:

1. Straight Back Step Gutter.

2. Pool Zero Entry Configuration.

1.02 RELATED WORK:

A. The following sections contain work that relates to this Section:

1. Section 01330, SUBMITTALS

2. Section 01760, OPERATION & MAINTENANCE MANUALS

3. Section 03361, GUNITE FOR SWIMMING POOLS

4. Section 03370, SHOTCRETE

5. Section 13000, SUMMARY OF WORK FOR POOLS

6. Section 15495, SWIMMING POOL EQUIPMENT

1.03 QUALITY ASSURANCE:

A. Manufacturer's Qualifications

1. Only manufacturers with a minimum five years experience in the design, manufacture, and field installation techniques required for stainless steel gutters are acceptable.

2. To assure singular responsibility by the manufacturer for installation, performance and warranty, the system shall be installed by the manufacturer or a designated licensee.

1.04 REFERENCES:

A. ANSI/APSP-7 2006, American National Standard, For Suction Entrapment Avoidance in Swimming Pools, Wading Pools, Spas, Hot Tubs, and Catch Basins.

B. ANSI/ASME A112.19.8 1987 (reaffirmed 1996), Suction fittings for swimming and wading pools, spas, hot tubs and whirlpool bathtub appliances.

C. ANSI/ASME A112.19.17-2002, manufactured safety release systems (SVRS) for residential and commercial swimming pool, spa, hot tub and wading pool suction systems.

D. ASTM F 2387-04, Standard specification for manufactured safety vacuum release systems, swimming pools, spas and hot tubs.

E. IAPMO SPS-4 2000, Special use suction fittings for swimming pools, spas and hot tubs (for suction side automatic swimming pool cleaners).

F. NFPA 70 – 2005, National Electrical Code, Article 680, Swimming pools, fountains, and similar installations.

1.05 SUBMITTALS: IN ACCORDANCE WITH REQUIREMENTS OF GENERAL SPECIFICATIONS, SUBMIT THE FOLLOWING:

A. Submittal Drawings

1. Submit shop drawings showing locations of each item, dimensioned plans and elevations, dimensioned gutter profile drawings of both end and sidewall gutter sections, and large scale details clearly indicating attachment devices, and materials as well as finishes. Details must also show work in relation to all adjacent trades.

B. Calculations

1. The manufacturer shall provide complete, detailed calculations indicating the ability of the recirculation system to handle design flows equal to both project specified flows as well as any State and Local Health Code Regulations.

1.06 DELIVERY, STORAGE AND HANDLING:

A. Prefabricated stainless steel sections to be shipped on pallets, suitably wrapped and secured. All system containers and pallets shall be legibly marked. The Engineer may reserve the right to require proof of material type supplied.

B. The prefabricated Gutter System is shipped in partially finished form. Contractor shall protect the system from damage caused by work of other trades, weather, ground conditions or vandalism before, during and following installation.

1.07 GUARANTEES:

A. The Manufacturer of the gutter system shall provide the Owner with a separate written (minimum) 1-year warranty against defective materials or workmanship. Manufacturer/Installer must also provide a separate, written 1-year warranty on the trench's grill covers protecting the Owner against defective materials or workmanship. (In the event of grill cover defect, Manufacturer will replace any portion of it at no cost to the Owner.)

B. The Manufacturer shall provide its limited non-prorated five-year warranty. The warranty shall cover that the system is free of all defects due to poor workmanship and materials for a period of (5) five years from the date of Substantial Completion. Furthermore, if the system is operated in accordance with written instructions given and accepted by the Owner, it will perform in complete accord with the specifications.

C. The warranty shall not include damage caused by abusive treatment to the system either during the construction phase of the project or when the system is operational.

PART 2- PRODUCTS

2.01 PERIMETER OVERFLOW RECIRCULATION SEGEMENTAL GUTTER

A. Approved Manufacturers

1. Intent of the design is to provide segmental gutters, cut and fitted accordingly to provide the appearance of a curved gutter system, meeting the intent of the design on the contract plans. Approved manufactures and are listed below:

a. Whitten Products

b. Neptune Benson

c. Paddock Industries

d. Approved Equal

B. Overflow Channel & Backsplash

1. The channel and backsplash of the gutter system shall be manufactured entirely of a 12 gauge type 316L stainless steel with a 2B finish.

2. The supporting stiffeners for the interior and exterior of the channel shall be of 12 gauge type 304L stainless steel with mill finish. The channel leveling angle shall be of 3/16-inch thick type 304L stainless steel with mill finish.

3. All exposed horizontal surfaces shall be sand blasted to provide a skid resistant finish.

C. Return Tube & Inlets

1. Filtered water return system, inclusive of pipe, fittings, and inlets, shall be NSF listed PVC with the exception of stainless steel jacketed couplings at the supply converter to transition from stainless to PVC. Internal pressurized stainless steel return loop return system will also be acceptable.

2. Velocity in the return tube shall be less than the velocity specified by state and local health codes in regards to pressure lines.

3. Inlets shall be installed so that their jetting action is directed at 45° towards the pool floor and at spacing intervals less than spacing defined by state and local health codes. The design velocity shall be between 10 – 20 ft/s at a pressure between 4 – 7 PSIG.

4. Each return tube shall be fitted with PVC jet wash fittings whose purpose and spacing shall be to provide some acceleration to water at the bottom of the overflow channel and thereby move along sediment in those areas.

D. Overflow Channel Grating

1. The drainage channel of the gutter shall be completely covered with a tamper-proof removable grate fabricated entirely of white, UV stabilized, Unigrate. Said grate shall be skid resistant and capable of supporting at least 450 lbs. per square foot structural bearing load with stiffeners not more than 4'-0" on center. Gratings requiring mechanical fasteners shall fastened by friction or by mechanical means.

E. Anchorage

1. The entire perimeter of the gutter shall be anchored to the steel of the pool structure by means of welding the leveling angles to #5 galvanized u-bars at intervals not to exceed 4'-0" on center or 18-inches from a corner. For renovation or replacement gutters, plated steel thunder-studs or steel dowels may be used. In either case, others shall ground the entire system per N.E.C./State Codes/Local Codes.

2. Stainless steel deck equipment anchors shall be attached to stainless steel gutter with stainless steel angle brackets.

E. Converters

1. The appropriate number of drain converters shall be provided such that the velocity in the pipe of each converter shall not exceed that which is specified by state or local health codes in regards to gravity lines unless the converter is under direct pump suction in which case the code velocity for suction lines shall govern.

2. The appropriate number of supply converters shall be provided such that the velocity in the pipe of each converter shall not exceed that which is specified by state or local health codes in regards to pressure lines. Converters requiring concrete encasement shall not be acceptable.

3. All converters shall be fabricated of 12 gauge type 304L stainless steel with schedule 10 pipes and a minimum of 3/8-inch thick stainless steel flanges. Said flanges shall incorporate an ANSI 16.5 B bolt pattern.

2.02 ADDITIONAL EQUIPMENT:

A. Depth Markers

1. Vinyl depth markers shall be furnished, in accordance with all state and local health codes regarding nomenclature, spacing, and minimum height requirements, installed by the gutter manufacturer.

2. The depth markers shall be of a flat black finish and shall be field installed by means of self-adhesive backing against a stainless backsplash. With a

Straight Back Step Level Gutter, the depth markers shall be installed on the backsplash of the stainless steel gutter.

B. Racing/Safety Line Cup Anchors

1. Install recessed cup anchors, in the 4-inch strip of exposed stainless below the handgrip in the locations detailed on the drawings. The anchors shall be comprised of a 316L stainless link and retaining pin all captured within a Vaylox 351 custom molded cup. Said assembly shall be held in place by means of the pin against the back of stainless face and will thereby be tamper resistant. Anchors that can be easily removed when no tension exists in the lane/safety line shall not be acceptable.

2.03 PERMITER OVERFLOW RECIRCULATION SMOOTH RADIUS CURVED GUTTER – BID ALTERNATE

A. Approved Manufactures

1. Intent is to provide a smooth curve gutter system that will match the proposed curved walls on the contract drawings. Gutters shall be cut and fitted accordingly to provide a smooth curve radius without straight sectional pieces, meeting the intent of the design on the contract plans.

2. Additional equipment featured in 2.02A through B shall be incorporated into the gutter system in the bid alternate

3. Approved manufactures and the associated models are listed below:

a. Paddock Industries – Model No. – R300

b. Approved Equal

B. Overflow Channel & Backsplash

3. The channel and backsplash of the gutter system shall be manufactured entirely of a 12 gauge type 316L stainless steel with a 2B finish.

4. The supporting stiffeners for the interior and exterior of the channel shall be of 12 gauge type 304L stainless steel with mill finish. The channel leveling angle shall be of 3/16-inch thick type 304L stainless steel with mill finish.

5. All exposed horizontal surfaces shall be sand blasted to provide a skid resistant finish.

C. Return Tube & Inlets

6. Filtered water return system, inclusive of pipe, fittings, and inlets, shall be NSF listed PVC with the exception of stainless steel jacketed couplings at the supply converter to transition from stainless to PVC. Internal pressurized stainless steel return loop return system will also be acceptable.

7. Velocity in the return tube shall be less than the velocity specified by state and local health codes in regards to pressure lines.

8. Inlets shall be installed so that their jetting action is directed at 45° towards the pool floor and at spacing intervals less than spacing defined by state and local health codes. The design velocity shall be between 10 – 20 ft/s at a pressure between 4 – 7 PSIG.

9. Each return tube shall be fitted with PVC jet wash fittings whose purpose and spacing shall be to provide some acceleration to water at the bottom of the overflow channel and thereby move along sediment in those areas.

D. Overflow Channel Grating

1. The drainage channel of the gutter shall be completely covered with a tamper-proof removable grate fabricated entirely of white, UV stabilized, grating. Said grate shall be skid resistant and capable of supporting at least 450 lbs. per square foot structural bearing load with stiffeners not more than 4'-0" on center. Gratings requiring mechanical fasteners shall fastened by friction or by mechanical means.

E. Anchorage

2. The entire perimeter of the gutter shall be anchored to the steel of the pool structure by means of welding the leveling angles to #5 galvanized u-bars at intervals not to exceed 4'-0" on center or 18-inches from a corner. For renovation or replacement gutters, plated steel thunder-studs or steel dowels may be used. In either case, others shall ground the entire system per N.E.C./State Codes/Local Codes.

3. Stainless steel deck equipment anchors shall be welded to stainless steel gutter with stainless steel angle brackets.

F. Converters

1. The appropriate number of drain converters shall be provided such that the velocity in the pipe of each converter shall not exceed that which is specified by state or local health codes in regards to gravity lines unless the converter is under direct pump suction in which case the code velocity for suction lines shall govern.

2. The appropriate number of supply converters shall be provided such that the velocity in the pipe of each converter shall not exceed that which is specified by state or local health codes in regards to pressure lines. Converters requiring concrete encasement shall not be acceptable.

3. All converters shall be fabricated of 12 gauge type 304L stainless steel with schedule 10 pipes and a minimum of 3/8-inch thick stainless steel flanges. Said flanges shall incorporate an ANSI 16.5 B bolt pattern.

PART 3 – EXECUTION

3.01 INSTALLATION:

A. Contractor must provide written confirmation and identification of site-specific benchmark prior to commencing gutter installation.

B. Welds

1. Only welders authorized by the Gutter System Manufacturer shall mount the perimeter overflow system on the pre-embedded anchorage installed by "others".

2. Gutter system sections shall be leveled to a tolerance of ± 1/ 16-inch and subsequently welded into one continuous length around the entire swimming pool perimeter in question.

3. Welding shall be of TIG process and shall be cleaned and blended when still hot to present a flush, smooth finish.

C. Testing

A. After the gutter sections are together the return tube and inlets shall be installed and then hydrostatically tested for leaks at a pressure of 7-10 PSIG for two hours.

D. Sign-Off

A. Immediately following completion of the installation, the installer shall obtain written certification from the Contractor that the installation is acceptable, complete, tested, and that the gutter overflow rim is level to a tolerance of ± 1/16-inch around the entire pool perimeter in question.

E. Grout Space

A. After installation is complete, the Contractor shall apply a non-shrink grout in the amount of a minimum 3-inches under the gutter and 5-inches behind. Grout installation shall not occur in lifts greater than 12-inches to prevent buckling of the overflow channel and shall be properly vibrated to eliminate voids.

F. Sealant Joints

A. After the installation of the grout is finished the Contractor shall provide a sealant joint at the interface of the exposed gutter face and the pool finish as well as at the interface of the backsplash and pool deck.

G. Cleaning

A. After all construction in the area of the gutter is complete, and before the pool is filled, the gutter shall be given a final cleaning with the manufacturer provided cleaning supplies.

END OF SECTION

SECTION 15500

HEATING, VENTILATING, AND AIR CONDITIONING

PART 1 - GENERAL

1.01 GENERAL REQUIREMENTS:

A. The GENERAL CONDITIONS, SUPPLEMENTARY GENERAL CONDITIONS and Division 1, General Requirements, are hereby made a part of the work specified in this Section.

B. Examine all other Sections of the Specifications for requirements which affect work of this Section whether or not such work is specifically mentioned in this Section.

C. Coordinate work with that of all other trades affecting or affected by work of this Section. Cooperate with such trades to assure the steady progress of all work under the Contract.

1.02 WORK INCLUDED:

A. The work under this Section shall include the furnishing of all material, labor, equipment and supplies and the performance of all operations to provide a complete working system as required by the drawings and details and as specified herein.

B. The Specifications and Drawings describe the minimum requirements that must be met by the HVAC Subcontractor for the installation of all work as shown on the Drawings and as specified herein under to include the following items:

1. All other work shown or specified.

C. The work required by this Section is shown on Drawings numbered H0.00, H1.01, H2.01 & H3.01.

1.03 RELATED WORK IN OTHER SECTIONS:

A. The following work is not included as work in this Section and is to be performed under other Sections:

1. Cutting and Patching.
2. Temporary Water and Heat.
3. Temporary Light and Power.
4. Excavation and Backfill.
5. Foundations and Trenching.
6. Concrete Bases for Equipment.

7. Flashing and Caulking.
8. Door Louvers.
9. Setting of Frames for Registers and Access Panels.
10. Painting.
11. Exterior Louvers.
12. Plumbing.
13. Power Wiring to all Equipment.

1.04 CODES, STANDARDS AND REFERENCES:

A. All materials and workmanship shall comply with the latest editions of all applicable Codes, Local and State Ordinances, Industry Standards and Regulations.

B. The HVAC Subcontractor shall notify the Architect/Engineer of any discrepancies between the Contract Documents and applicable Codes, Standards, etc.

C. In the event of a conflict, the most stringent requirements shall apply.

D. The following Codes, Standards and References shall be utilized as applicable:

1. Connecticut State Building Code.
2. National Electric Code (NEC).
3. Environmental Protection Agency (EPA).
5. Local Ordinances, Regulations Town of Greenwich
6. National Fire Protection Association (NFPA).
7. American Society of Heating, Refrigerating and Air-Conditioning Engineers, Inc. (ASHRAE).
8. Air Movement and Control Association, Inc. (AMCA).
9. American National Standards Institute (ANSI).
10. Air-Conditioning and Refrigeration Institute (ARI).
11. American Society of Mechanical Engineers (ASME).
12. American Society for Testing and Materials (ASTM).
13. American Welding Society, Inc. (AWS).
14. Commercial Standards, U.S. Department of Commerce (CS).
15. Factory Mutual (FM).
16. Industrial Risk Insurers (IRI).
17. National Electrical Manufacturers Association (NEMA).
18. The Institute of Electrical and Electronic Engineers, Inc. (IEEE).
19. Sheet Metal and Air Conditioning Contractors' National Association, Inc. (SMACNA).
20. American Gas Association (AGA).
21. Underwriters Laboratories, Inc. (UL).
22. U.S. Department of Health and Human Services, Guidelines for Construction and Equipment for Hospital and Medical Facilities.

1.05 OBTAINING INFORMATION:

A. Obtain from the manufacturer the proper method of installation and connection of the equipment that is to be furnished and installed. Obtain all information that is necessary to facilitate the work and to complete the project.

B. All equipment shall be installed in accordance with the manufacturer's recommendations.

1.06 COOPERATION AND COORDINATION WITH OTHER TRADES:

A. The Contract Drawings are diagrammatic only, intending to indicate general routing and location of piping, ductwork and equipment. The Drawings are not intended to show every offset and accessory required, or every structural difficulty that may be encountered.

B. Where requirements of the plans and/or specifications are in conflict, the most stringent requirement will be included in the Contract. Prior to ordering and/or installing any portion of the work which appears to be in conflict, the work shall be brought to the Architect/Engineer's attention for direction as to what is provided.

C. Final location of air distribution devices, thermostats, control devices, etc., shall be coordinated with the Architectural Plans (i.e., Reflected Ceiling Plan). Additional offsets, fittings, etc., shall be provided as needed to meet this requirement at no extra cost to the Owner.

D. If discrepancies exist in the scope of work as to what trade provides items (e.g., starters), they shall be reported to the Architect/Engineer prior to signing the Contract. If the discrepancies are not reported, the HVAC Subcontractor shall furnish such items as needed for a complete and operable system.

E. All work shall be installed in cooperation with other trades.

F. Keep fully informed as to the shape, size and position of all openings required for all apparatus and give information in advance to building openings into the work. Furnish and set in place all sleeves, pockets, supports and incidentals.

G. Routing and locations of pipes, ductwork and equipment shall be adjusted to accommodate the work with interferences anticipated and encountered. The HVAC Subcontractor shall determine the exact routing and location of his/her systems prior to fabrication and/or installation of any system component.

H. All distribution systems which require pitch or slope such as plumbing drains and condensate piping shall have the right of way over those which do not. Confer with other trades as to the location of pipes, ducts and equipment and install work to avoid interferences. The HVAC Subcontractor shall provide air vents and drains as required for his work to accommodate offsets and changes of directions needed to maintain

proper headroom and pitch of sloping lines.

I. Ductwork, piping and equipment shall be installed to permit removal of coils, filters, fan shafts, wheels, control appurtenances, drives and other system components requiring periodic maintenance. Access to equipment shall be capable without damage to other parts and/or work of other trades.

J. The HVAC Subcontractor shall not install <u>any</u> piping, ductwork or equipment in or through Electrical Rooms unless it is intended to serve these rooms.

1.07 COORDINATION DRAWINGS:

A. Prior to the purchasing and fabrication of materials, each Subcontractor shall prepare Coordination Drawings for all floors/areas showing the size and location of his/her equipment and lines.

B. The Coordination Drawings shall be produced on AutoCAD Release 2010 minimum or compatible system. A disc and one (1) set of reproducibles (all-trade composite) shall be provided to the Architect/Engineer for review.

C. Coordination Drawings shall be 3/8 inch = 1 foot - 0 inch scale. Prepare and submit for review, at that scale or larger, plans and sections of areas such as Mechanical Rooms.

D. The cost of preparing and reproducing these Drawings will be included as part of this Contract. The HVAC Subcontractor shall prepare the initial Drawings and circulate the Drawings to the other trades (Plumbing and Electrical) so they can indicate their work.

E. Coordination Drawings shall not be construed as replacing any Shop Drawings.

1.08 PERMITS, FEES, RULES AND REGULATIONS:

A. Give the proper Authorities all requisite notices or information relating to the work under this Section. Obtain and pay for all fees, licenses, permits and certificates. Comply with the rules and regulations of all Local, State and Federal Authorities having jurisdiction, the rules and regulations of the National Board of Fire Underwriters and the Public Utilities Companies serving the building.

1.09 PROTECTION OF WORK AND PROPERTY:

A. Be responsible for the care and protection of all work included under this Section until it has been tested and accepted.

B. Protect all equipment and materials from damage from all causes including theft. All materials and equipment damaged or stolen shall be repaired or replaced with equal material or equipment.

C. Protect all equipment, outlets and openings with temporary plugs, caps and covers. Protect work and materials of other trades from damage that might be caused by work or workmen and make good damage thus caused.

D. When open-flame or spark producing tools such as blower torches, welding equipment, etc., are required in the process of executing the work in existing building, the General Contractor will be notified not less than twenty-four (24) hours in advance of the time that the work is to begin and the location where the work is to be performed.

E. Provide, where necessary, fire protective covering and maintain a constant non-working fire watch where work is being performed and until it is completed.

1.10 SUBMITTAL REQUIREMENTS:

A. Refer to General Requirements all of which shall be included as part of this Specification.

1.11 MATERIAL AND EQUIPMENT STANDARDS:

A. Where materials or equipment are specified by patent proprietary name, or name of the manufacturer, such specification shall be deemed to be used for the purpose of establishing a standard for that particular item. No equipment or material shall be used unless previously approved by the Architect/Engineer.

B. Substitutions may be offered for review provided the material, equipment or process offered for consideration is equal in every respect to that indicated or specified and only if the term “approved equal” appears. The request for each substitution must be accompanied by complete specifications together with drawings or samples to properly appraise the materials, equipment or process.

C. If a substitution of materials or equipment in whole or in part is made, the Contractor shall bear the cost of any changes necessitated by any other trade as a result of said substitution.

D. Manufacturer’s directions shall be followed in the delivery, storage and installation of any equipment. Notify the Architect/Engineer, in writing, of any conflict between the Contract Drawings and the manufacturer’s requirements and obtain a written response prior to proceeding with work. Should the HVAC Subcontractor fail to comply with this, he/she shall bear the costs of any corrections which may be required.

E. The HVAC Subcontractor shall furnish and install all equipment, accessories, connections and incidentals to complete the work under this Section.

1.12 GUARANTEE:

A. Manufacturers shall provide their standard replacement warranties for material and

equipment furnished under this Section. Such warranties shall be in addition to and not in lieu of all liabilities which the manufacturer and Contractor may have by law or by provisions of the Contract Documents.

B. All materials, equipment and work furnished under this Section shall be guaranteed against all defects in materials and workmanship for a minimum period of one (1) year commencing with the date of Substantial Completion. Any failure due to defective material, equipment or workmanship which may develop shall be corrected at no expense to the Owner including all damage to areas, materials and other systems resulting from such failures.

C. Upon receipt of notice from the Owner of failure of any part of the systems during the guarantee period, the affected parts shall be replaced. Any equipment requiring excessive service shall be considered defective and shall be replaced.

1.13 CERTIFICATES OF APPROVAL:

A. Upon completion of all work, furnish, in duplicate, certificates of inspections from the manufacturers stating that authorized factory engineers have inspected and tested the operation of their respective equipment and found same to be in satisfactory operating condition.

1.14 SUBSTANTIAL COMPLETION:

A. When Subcontractor considers Work under this Section (or designated portion of Work) is substantially complete, submit written notice through the General Contractor with a list of items remaining to be completed or corrected.

B. Should Architect and/or his Engineer observe and find Work is not substantially complete, he will promptly notify Subcontractor through the General Contractor in writing, listing observed deficiencies.

C. Subcontractor shall remedy deficiencies and send a second written notice of substantial completion.

D. When Architect and/or his Engineer finds work is substantially complete he will prepare a Certificate of Substantial Completion in accordance with provisions of General Conditions.

1.15 FINAL COMPLETION:

A. When Subcontractor considers Work under this Section is complete, submit through the General Contractor written certification that:

1. Contract documents have been reviewed.
2. Work has been inspected for compliance with Contract Documents.

3. Work has been completed in accordance with Contract Documents and deficiencies listed with Certificate of Substantial Completion have been corrected.
4. Equipment and systems have been tested, adjusted and balanced and are fully operational.
5. Operation of system has been demonstrated to Owner's personnel.
6. Work is complete and ready for Architect's and/or his Engineer's final review.

B. Should Architect and/or his Engineer observe and find Work incomplete, he will promptly suspend his review and notify Subcontractor in writing through the General Contractor.

C. Subcontractor shall complete his work, remedy deficiencies and send a second certification of final completion.

D. Architect and/or his Engineer shall, upon receipt of a second certification of completion, make a second review and shall notify the Subcontractor in writing through the General Contractor listing observed deficiencies.

E. When Architect and/or his Engineer finds Work is complete, he will consider closeout submittals.

1.16 REOBSERVATION FEES:

A. Should status of completion of Work require additional services by Architect and/or his Engineer due to failure of Work to conform with Subcontractor's claims on initial Architect and/or his Engineer review for Substantial Completion or for Final Completion, Owner will deduct the amount of Architect and/or his Engineer compensation for additional services from final payment to Subcontractor.

1.17 OPERATING INSTRUCTIONS AND MAINTENANCE MANUALS:

A. The HVAC Subcontractor shall instruct the representative of the Owner in the proper operation of all systems and equipment provided. The HVAC Subcontractor shall make arrangements through the General Contractor as to whom and when the instructions are to be given. The Architect/Engineer shall be satisfied that the Owner has been given complete and thorough instructions in system operation prior to final payment. A minimum of five (5) days of additional training shall be provided to meet the intent of this Specification.

B. In addition, prepare five (5) sets of manufacturer's catalogs, other similar data including the necessary photographic equipment cuts, parts list and wiring diagrams covering all mechanical equipment and devices furnished and installed under this Section. These manuals shall provide complete instructions for the proper operation and use of the equipment together with instructions for lubrication and periodic maintenance and for

troubleshooting. Operating instructions shall be specific for each system and shall include copies of posted specific instructions. This manual shall contain only that information which specifically applies to this project and all unrelated material shall be deleted. During the instruction period this manual shall be used and explained. The material shall be bound in note book form and indexed.

C. Provide name, address and telephone number of the manufacturer's representative and service company for each piece of equipment so that the source of replacement parts and service for each item of equipment can be readily obtained.

1.18 IDENTIFICATION OF EQUIPMENT AND MATERIAL:

A. Label each piece of Mechanical Equipment with a plastic laminate Nameplate with a white background and with the designated equipment and area or system served engraved in black letters. Nameplates shall be 1-1/2 inches in height by 4 inches minimum length and secured to the piece of equipment with two "Phillips head" brass screws or machine bolt with locknuts. Nameplates shall be manufactured by Seton Nameplate Company, Dennison Manufacturing Company or Markem Company.

B. Apparatus shall be identified by the number obtained from the Drawings.

C. Exposed ductwork and ductwork above removable ceilings shall be stenciled with 1-3/4 inch high letters at each junction or branch takeoff, at least once in each room, and at intervals not more than 20 feet. Stencil shall clearly identify duct service (SUP for supply, RET for return, EXH for exhaust and with an arrow showing the direction of flow. Duct shall be stenciled after insulation has been applied.

1.19 WATERPROOF, FLASHING AND COUNTERFLASHING:

A. Unless otherwise indicated, the HVAC Subcontractor shall provide all counterflashing and waterproofing of all piping, ductwork and equipment provided which pierce roofs, walls and other weather barrier surfaces. All work under this Paragraph shall be coordinated with the General Contractor.

B. All work shall be performed to assure a weatherproof installation. Any leaks shall be repaired by the Subcontractor.

C. All flashing required for ductwork and piping penetrations shall be provided by the General Contractor.

1.20 MISCELLANEOUS IRON AND STEEL:

A. The HVAC Subcontractor shall provide all steel supports and hangers as indicated on the Drawings and/or required to support all HVAC equipment, systems and materials provided under this Contract.

B. All work shall be performed by skilled mechanics and welders. Stands, brackets and framework shall be properly sized, assembled and constructed.

C. In general, members shall be welded, except that bolting may be used for field assembly and where welding is impractical. All welds shall be ground smooth.

D. Assemblies shall be cleaned and dried, then painted with a rust inhibiting paint.

1.21 SEISMIC RESTRAINTS:

A. Installation of Mechanical and Electrical equipment, accessories and components shall be in accordance with the Seismic Requirements identified in the Connecticut State Building Code.

PART 2 - PRODUCTS

2.01 HANGERS AND SUPPORTS

A. The HVAC Subcontractor shall be required to utilize hangers appropriate for the type of structural system in the building. Supports and hangers shall be installed in compliance with the seismic requirements of the Connecticut State Building Code.

B. Hangers on piping under 2 inch may be 1A band type instead of the clevis type. Hangers for condenser water piping shall be installed outside the insulation as specified elsewhere in this Section.

C. Hangers for copper piping shall be 1A band type hangers.

D. All hangers for piping associated with vibrating equipment shall be vibration eliminator type. The first two (2) hangers from the piece of equipment shall be combination rubber-in-shear and springs with 1/4 inch static deflection in the rubber and 3/4 inch in the spring. The remaining hangers within 100 pipe diameters of the equipment shall be double deflection rubber-in-shear with 3/8 inch static deflection. These eliminators shall be installed in the hanger rods, shall be of a design that the adjustment is made to put the load on the spring without changing the installed height and shall be Vibration Eliminator Company, Mason Industries, Korfund or approved equal.

E. All hanger rods shall be hung from I-beam clamps on steel beams, or from coach screw threaded rods in wood construction. Clamps shall have retaining clips and locknut. If inserts have not been provided, hangers shall be through bolted or Cinch or Slug-in expansion bolts may be used with the permission of the Architect.

F. Where support points are required between available inserts or to avoid the work of another trade, provide a system of spanning channels and angles between these support points as required. When pipe or equipment is hung or supported, no part of any

equipment furnished by this Subcontractor or any part of the building shall be stressed beyond its normal allowable working strength.

G. All steel framework and supports provided under this Section shall conform to the latest revisions of the Standard Specifications for Steel for Bridges and Buildings of the American Society for Testing Materials. All shop fabricated framework shall have a shop coat of Metal Primer, except steel in concrete shall not be painted.

2.02 REFRIGERANT PIPING AND ACCESSORIES

A. Refrigerant piping shall be copper tubing Type "L", hard drawn cleaned, dehydrated and capped for refrigerant service conforming to ASTM B280. All fittings shall be wrought copper brazed joint type conforming to ANSI B16.22. All joints shall be made using a brazing alloy containing silver or using a copper-phosphorous alloy. Brazing alloys shall have a minimum of 1,100°F melting temperature and shall conform to ASTM B260.

B. Provide all pilot operated expansion valves, liquid (and hot gas) solenoid valves, (hot gas regulators), (side connectors for each coil distributor for hot gas bypass), (adjustable head pressure control valve, condenser differential pressure valve, refrigerant receiver), strainers, sight glasses with moisture indicators, silica gel dryers, purge valves, relief valves, service valves, shut off valves and all other accessories and appurtenances to provide a complete and properly functioning refrigerant system under all conditions of operation. Provide sufficient valves to enable system to be pumped down.

C. Refrigerant service valves shall be designed for use with refrigerant used and shall have pressure ratings compatible with system working pressure encountered. Valves shall be packed, wing cap, non-rotating swivel seat disk valves as manufactured by either Henry or Mueller.

D. Check valves shall be brass body suitable for refrigerant liquid or gas service as required by the system design operation. Valves shall be as manufactured by either Henry or Mueller.

E. Filter dryer in the liquid line shall consist of a steel cylinder filled with a suitable desiccant that will not plug, cake, rust, channel or break down and shall remove both water and acid from the refrigerant. The dryer shall be constructed so that none of the desiccant will pass into the refrigerant lines. The filter dryer shall be replaceable core type "Catch-All" as manufactured by either Sporlan or Alco.

F. Sight glasses shall be see through type with cover cap on each side. Sight glasses shall be provided in liquid line before each expansion valve. Sight glasses shall be "See All" combination moisture and liquid indicator as manufactured by either Sporlan or Alco.

G. Hangers for refrigerant piping shall be 1A band type of copper plated steel.

2.03 DUCTLESS SPLIT SYSTEM HEAT PUMP:

A. System description

1) The heat pump air conditioning system shall be a High Efficiency ductless split system. The system shall consist of a slim silhouette, compact, wall mounted indoor fan coil section with a wired controller and a slim silhouette horizontal discharge outdoor unit which shall be a high efficiency, heat pump design with inverter driven compressor.
2) Systems shall be designed to use R-410a refrigerant

B. Quality Assurance

1) The units shall be tested by a Nationally Recognized Testing Laboratory (NRTL) and shall bear the ETL label.
2) All wiring shall be in accordance with the National Electrical Code (N.E.C.).
3) The units shall be rated in accordance with Air-conditioning, Heating, and Refrigeration Institute's (AHRI) Standard 240 and bear the AHRI Certification label.
4) The units shall be manufactured in a facility registered to ISO 9001 and ISO 14001, which is a set of standards applying to environmental protection set by the International Standard Organization (ISO).
5) A dry air holding charge shall be provided in the indoor section.
6) Unit shall be stored and handled according to the manufacturer's recommendations.

C. Warranty

1) The units shall have a manufacturer's parts and defects warranty for a period five (5) years from date of installation. The compressor shall have a warranty of seven (7) years from the same date of installation. If, during this period, any part should fail to function properly due to defects in workmanship or material, it shall be replaced or repaired at the discretion of the manufacturer. This warranty does not include labor.

D. Indoor Unit

The indoor unit shall be factory assembled, wired and run tested. Contained within the unit shall be all factory wiring, piping, control circuit board, fan and fan motor. The unit shall have a self-diagnostic function, 3-minute time delay mechanism, and an auto restart function. Indoor unit shall be purged with dry air before shipment from factory.

1) Unit Cabinet:
   a. The casing shall have a smooth front, white finish – Munsell 1.0Y 9.2/0.2.

b. Multi directional drain connection and refrigerant piping, offering three (3) direction pipe alignments for all refrigerant piping and two (2) direction pipe alignments for condensate draining shall be standard.
c. There shall be a separate, metal installation-plate that secures the indoor unit firmly to the wall. The installation-plate shall be securely attached to the wall using appropriate anchor method. Installing contractor shall determine the best method and be responsible for proper mounting of the installation plate to the wall.

2) Fan:
   a. The indoor unit fan shall be an assembly with a line-flow fan direct driven by a single motor.
   b. The fan shall be statically and dynamically balanced and be powered by a motor with permanently lubricated bearing.
   c. An integral, motorized, multi-position, horizontal air sweep vane shall provide for uniform air distribution, up and down. Vane shall have 5 selectable positions plus AUTO (Controls position based upon mode, microprocessor shall automatically determine the vane angle to provide the optimum room temperature distribution) and SWING (Continuously moves up and down). In OFF mode the horizontal vane shall return to the closed position.
   d. A motorized adjustable vertical guide vane shall be provided with the ability to change the airflow from side to side (left to right). Vane shall be positioned by a stepper motor driven by the indoor unit control microprocessor. Vane shall have 5 selectable positions and SWING (Continuously moves left and right).
   e. The indoor fan shall operate at any of four (4) selectable speeds: Powerful, High, Medium, and Low.
3) Filter:
   a. Return air shall be triple filtered by means of two (2) easily removed, washable foam Hybrid Catechin filters, a Blue-Enzyme Filter with permanently charged surface and a Platinum Catalyst Deodorizing Filter with ceramic surface and pore sizes ranging from 1 to 10 nanometers.
4) Coil:
   a. The indoor unit coil shall be of nonferrous construction with smooth plate fins on copper tubing.
   b. The tubing shall have inner groves for high efficiency heat exchange.
   c. All tube joints shall be brazed with phoscopper or silver alloy.
   d. The coils shall be pressure tested at the factory.
   e. A sloped, corrosion resistant condensate pan with drain shall be provided under the coil.
5) Electrical:
   a. The indoor unit electrical power shall be 208-230 volts, 1-phase, 60 hertz.
   b. The system shall be equipped with A-Control – a system directing that the indoor unit be powered directly from the outdoor unit using a 3-wire, 14 ga. AWG connection plus ground.
   c. The indoor unit shall not have any supplemental electrical heat elements.

E. Control

1) General:
   a. The unit shall have a wired controller to perform input functions necessary to operate the system.
   b. The controller shall have a Power On/Off switch, Mode Selector – Cool, Dry, Heat, Auto, and Powerful Modes - Temperature Setting, Timer Control, Fan Speed Select and Horizontal and Vertical Vane control selector. There shall be an i-See® Sensor Area Selector control.
   c. The indoor unit shall perform Self-diagnostic Function and Check Mode switching.
   d. Temperature changes shall be in 1ºF increments with a setting range of 61 to 88ºF.
   e. The microprocessor located in the indoor unit shall have the capability of sensing return air temperature and indoor coil temperature, receiving and processing commands from the wired controller, providing emergency operation and controlling the outdoor unit.
   f. Indoor units shall provide uniform temperature detection and automatically response to adjust the set temperature to provide uniform comfort from floor to ceiling.
   g. The system shall be capable of automatically restarting and operating at the previously selected conditions when the power is restored after power interruption.
   h. Controller shall provide selection of the operation of the horizontal air vane and the air sweep louvers,
   i. The indoor unit shall have a field installed, multi-function, hard-wired, wall mounted remote controller. Controller shall be a PAR-21MAA Deluxe MA type remote controller
      a) 9.1. Hard-wired, wall mounted remote controller shall require a MAC-397IF-E MA Series Terminal Interface for communications. Interface will be mounted at the indoor unit. A two (2) conductor, stranded, 22 AWG twisted pair, jacketed, cable shall connect the MAC-397IF-E to the PAR-21MAA wall controller. Connection shall not be polarity sensitive and controller wire shall not exceed thirty-three (33) feet (10M) length.

F. Outdoor Units

1) General:
   The MUZ-FE Series horizontal discharge outdoor units shall be specifically designed to perform and communicate with the MSZ-FE Series wall mounted indoor units. The outdoor unit shall be completely factory assembled, piped and wired. Each unit shall be run tested at the factory.

   a. Unit Cabinet:
      i.. The casing shall be fabricated of galvanized steel, bonderized, finished with an electrostatically applied, thermally fused acrylic or polyester powder

coating for corrosion protection. Assembly hardware shall be cadmium plated for weather resistance.

b. Cabinet color shall be Munsell 3Y 7.8/1.1.

c. Two (2) mild steel mounting feet, traverse mounted across the cabinet base pan, welded mount, providing four (4) slotted mounting holes shall be furnished. Assembly shall withstand lateral wind gust up to 155 MPH to meet applicable weather codes.

2). Fan:

a. The unit shall be furnished with a direct drive propeller type fan. The outdoor unit fan motor shall be a direct current (DC) motor having permanently lubricated bearings, controlled by a microprocessor such that the fan motor turns on five (5) seconds prior to the compressor start-up and turns off fifteen (15) seconds after the compressor has stopped running.

b. The fan motor shall be mounted for quiet operation.

c. The fan shall be provided with a raised guard to prevent contact with moving parts.

d. The outdoor unit shall have horizontal discharge airflow.

3) Coil:

a. The outdoor unit coil shall be of nonferrous construction with aluminum plate fins on copper tubing.

b. The coil shall be protected with an integral guard.

c. Refrigerant flow from the outdoor unit shall be regulated by means of an electronically controlled, precision, linear expansion valve.

d. Outdoor unit shall be pre-charged with sufficient R-410a refrigerant for up to twenty five (25) feet of refrigerant piping.

e. All refrigerant lines between outdoor and indoor units shall be of annealed, refrigeration grade copper tubing, ARC Type, meeting ASTM B280 requirements, individually insulated in twin-tube, flexible, closed-cell, CFC-free (ozone depletion potential of zero), elastomeric material for the insulation of refrigerant pipes and tubes with thermal conductivity equal to or better than 0.27 BTU-inch/hour per Sq Ft / °F, a water vapor transmission equal to or better than 0.08 Perm-inch and superior fire ratings such that insulation will not contribute significantly to fire and up to 1” thick insulation shall have a - Flame-Spread Index of less than 25 and a Smoke-development Index of less than 50 as tested by ASTM E 84 and CAN / ULC S-102.

4). Compressor:

a. The compressor shall be a high performance, hermetic, inverter driven, variable speed, dual rotary type manufactured by Mitsubishi Electric Corporation.

b. The compressor motor shall be direct current (DC) type equipped with a factory supplied and installed inverter drive package.

c. The outdoor unit shall be equipped with an accumulator.

d. The compressor will be equipped with internal thermal overload protection.

e. The outdoor unit must have the ability to operate over the full capacity range with a maximum height difference of 40 feet and have refrigerant tubing length of up to 65 feet between the indoor and outdoor units.
f. There shall be no need for line size changes, filters, sight glasses, and traps shall not be used, and no additional refrigerant oil shall be required.
g. The compressor shall be mounted so as to avoid the transmission of vibration.

5). Electrical:
a. The outdoor unit electrical power supply shall be 208/230 volts, 1-phase, 60 hertz.
b. The unit shall be capable of satisfactory operation within voltage limits of 187 volts to 253 volts.
c. The outdoor unit shall be controlled by microprocessors located in the indoor unit and outdoor unit. A 12 to 24 volt DC data stream shall communicate between the units providing all necessary information for full function control.

2.04 SHEET METAL DUCTWORK

A. Furnish all sheet metal ductwork constructed to the Static Pressure Class as described herein for the various supply, return and exhaust air systems. Ductwork of 1" Pressure Classification shall be for all ductwork. All sheet metal ductwork and sheet metal plenums shall be constructed of G-60 coated galvanized steel of lock forming grade conforming to ASTM A653 and A924 Standards unless otherwise specified.

B. Kitchen hood exhaust ductwork shall be constructed of 16 gauge black iron for indoor installations and 18 gauge stainless steel for outdoor installations with all connections and joints made gas-tight by continuous welded seams. All joints and seams shall be externally reinforced for 3 inch Static Pressure Classification duct construction. No internal tie rods shall be used. Provide cleanouts with fire retardant gasket at each change in direction, at the base of each riser and at each floor level. Lower edge of all openings in horizontal ducts shall be not less than 1-1/2 inches from the bottom of the duct. Duct construction and installation shall be in accordance with NFPA 96.

C. Ductwork, except where specified otherwise herein, shall be fabricated in accordance with the "HVAC Duct construction Standards" published by the Sheet Metal and Air Conditioning Contractors National Association, Incorporated. The gauge of all ducts shall be as listed in the SMACNA Standard. For rectangular duct the use of "Ductmate" flange transverse joints will be allowed.

D. All elbows and offsets shall be fabricated with inside radius equal to the dimension of the duct in the plane of the elbow or offset. Where elbows may be required to have shorter radius, they shall be constructed with full curvature turning vanes spaced to divide the elbow into air passages that have equal CURVE RATIOS. Short radius elbows: with outside radius of less than 20 inches shall have one (1) inner splitter; with outside radius of less than 36 inches and more than 20 inches shall have two (2) inner splitters; and with outside radius of more than 36 inches shall have three (3) inner

splitters. Inside radius shall not be less than 4 inches. Where square heeled vane elbows are shown, the vanes shall be single thickness and shall have a spacing of 3-1/4inches as shown in SMACNA Manual Figure 2-3. Vaned elbows shall be avoided in all Pressure Classifications above 2".

E. All round ducts through 36 inches in diameter shall be constructed of spiral lock seam or approved equal construction.

F. All round and oval conduit fittings shall be equal to United States Metal Corporation Spiral Uni-Seal fittings for use with the conduit. Use conical tees and laterals where shown. Special fittings shall be used as shown to give even air flow with minimum pressure drop. Ninety degree elbows shall be die-formed p to and including 8 inch diameter and five (5) piece for 9 inch diameter and larger. Forty five degree elbows shall be die-formed up to and including 8 inch diameter and three (3) piece for 9 inch diameter and larger.

G. Transitions in duct mains and branches shall be made with sides sloping at not more than 1 inch in 7 inches on the side of the transformation for diverging transitions and 1 inch in 4 inches for converging transitions. Transitions in ductwork to pieces of equipment (coils, filter boxes, air handling unit intakes, etc.) shall be made with a 20° maximum angle projected from the duct side on a diverging transition and a 30° maximum angle projected from the straight duct side on a converging transition. Any conditions requiring deviations from the above shall be brought to the attention of the Architect for approval.

H. All notches for connecting sections of duct, including longitudinal seam notches, shall not be cut any deeper than 1-7/8 inch to ensure tight corners in a 2 inch deep slip joints. Any notched corners not meeting with the approval of the Architect shall be removed and reinstalled or sealed to the satisfaction of the Architect.

I. All joints and seams in duct, either shop or field, shall be sealed in accordance with Table 1-2 of the SMACNA "HVAC Duct Construction Standards". Sealer shall be Hardcast CCWI-181 water based sealant, or other approved equal having a VOC content less than 30 g/L compliant with Green Seal Standard GC-36 and South Coast Air Quality Management District (SCAQMD) Rule # 1168. Sealer shall be applied to ends of round duct prior to assembly, to the inside of double Pittsburgh seams before closing and to ends of ducts and cleanouts and/or slips before joining rectangular ducts. Slips shall be at least two (2) gauges heavier than the duct and all joints must be made in a neat and workmanlike manner and in all cases joints must be tight. Sealer shall be used in the attachment of reinforcing or flange angles.

J. Reinforcing angles for galvanized duct shall be galvanized and shall be attached to ducts with sheet metal screws or rivets 6 inches on center.

K. If companion angles are used, a neoprene gasket shall be used between angles. Companion angles shall be used to join ducts of different material.

L. All slip cleats or round duct joint connectors shall be sealed with sealer specified above and fastened with sheet metal screws on 6 inch centers. After twenty-four (24) hours, all joints shall have a second coat of sealer.

M. During construction, all openings in ductwork shall be covered to prevent entrance of foreign material.

2.05 FLEXIBLE DUCT

A. Provide Flexmaster Type 2, or approved equal, insulated flexible duct at the connection of two terminal units consisting of trilaminate of aluminum foil, fiberglass and aluminized polyester to prevent tearing and running of the product. The fabric material shall be mechanically locked to the outside helix. (Use of adhesives to lock the fabric in place is unacceptable.) Flexible duct shall be listed by UL under UL 181 Standards as Class 1 air duct and shall be rated for 12 inches positive pressure and 10 inches negative pressure in sizes from 4 inch to 16 inch diameter. Flex duct shall be constructed in accordance with NFPA Standards 90A and 90B. It shall have a smoke/flame spread rating of 50/25. Insulated flex duct shall have a gray fire retardant polyethylene outer jacket with a 1/2 pound, density - 1-1/2 inch thick fiberglass insulation blanket, factory wrapped. Flexible duct shall be run straight, have no bends or kinks and shall be pulled taut. Lengths shall be not less than 8 inches or more than 18 inches. Flexible duct shall be similar and equal to Flexmaster Type 2 as manufactured by Buckley Associates.

2.06 LOW PROFILE FAN COIL

A. MANUFACTURERS

1. Manufacturers: Subject to compliance with specifications contained within this document, manufacturers offering products that may be incorporated into the work include, but are not limited to:
   a. Greenheck Fan Corporation
   b. Johnson
   c. Trane

B. MANUFACTURED UNITS

1. Low profile fan coil units shall be factory assembled and consist of fans, motor and drive assembly, coils, filters, stainless-steel condensate pans and accessories.

C. CABINET

1. Materials: Formed double-wall insulated panels, fabricated to allow removal for access to internal parts and components, with joints between sections gasketed.
   a. Outside Casing: 18 gauge, galvanized steel (G90)

b. Inside Casing: 18 gauge, galvanized steel (G90)
c. Utility Lugs: For lifting unit and fastening to permanent structure, 8 gauge, galvanized steel (G90)

2. Cabinet Insulation: Comply with NFPA 90A or NFPA 90B.
   a. Materials: Fiber glass insulation.
   b. Thickness: 1 inch
   c. Density: 1 inch - pounds per cubic foot.
   d. Thermal Conductivity (k-Value): 0.26 at 75 deg F mean temperature.
   e. Fire-Hazard Classification: Maximum flame-spread index of 25 and smoke-developed index of 50, when tested according to ASTM C 411.
   f. Location and Application: Encased between outside and inside casing.
3. Access Panels: Same materials and finishes as cabinet complete with threaded bolted fasteners, and gaskets. Inspection and access panels shall be sized and located to allow periodic maintenance and inspections. Provide access panels in the following locations:
   a. Fan Section: Inspection and access panels.
   b. Coil Section: Inspection panel.
   c. Filter Section: Inspection and access panels to allow periodic removal and installation of filters.
4. Condensate Drain Pans: Formed sections of stainless-steel sheet complying with requirements in ASHRAE 62. Fabricate pans with slopes in two planes to collect condensate from cooling coils (including coil piping connections and return bends) when units are operating at maximum catalogued face velocity across cooling coil.
   a. Double-Wall Construction: Fill space between walls with 1 inch, 1 ½ pound fiber glass insulation.
   b. Drain Connections: Main and auxiliary on same side of fan.
5. Nameplate Mylar: Permanently affixed to cabinet. Include model, make, and serial number identification.

D. FAN SECTION
1. Fan-Section Construction: Belt-driven centrifugal fans consisting of housing, wheel, fan shaft, bearings, motor drive assembly, and support structure and equipped with formed-steel channel base for integral mounting of fan, motor, and casing panels. Mount fan with interior neoprene vibration isolation.
2. Centrifugal Fan Housings: Formed- and reinforced-steel panels to make curved scroll housings with shaped cutoff, spun-metal inlet bell, and access panels or doors to allow entry to internal parts and components.
   a. Panel Bracing: Steel angle- or channel-iron member supports for mounting and supporting fan scroll, wheel, motor, and accessories.
   b. Horizontal Flanged Split Housing: Bolted construction.
   c. Drive Frame: Rail mounted, heavy gauge steel to allow frame to slide for easy belt tensioning.
3. Fan Assemblies: Statically and dynamically balanced and designed for continuous operation at maximum rated fan speed and motor horsepower.

4. Forward-Curved Fan Wheels: Galvanized-steel and/or aluminum/painted steel construction with inlet flange, backplate, and shallow blades with inlet and tip curved forward in direction of airflow and mechanically secured to flange and backplate; cast-steel hub swaged to backplate and fastened to shaft with set screws.
5. Coatings (exterior only): Permatector
6. Shafts: Statically and dynamically balanced and designed for continuous operation at maximum rated fan speed and motor horsepower, with final alignment and belt adjustment made after installation.
   a. Turned, ground, and polished Stainless steel with keyway. Ship with a protective coating of lubricating oil.
   b. Designed to operate at no more than 70 percent of first critical speed at top of fan's speed range.
7. Prelubricated and Sealed Shaft Bearings: Self-aligning, pillow-block-type ball bearings.
   a. Ball-Bearing Rating Life: ABMA 9, L_{10} of 100,000 hours.
8. Belt Drives: Factory mounted, with final alignment and belt adjustment made after installation and with 1.5 service factor based on fan motor.
   a. Pulleys: Mechanical cast iron with split, tapered bushing; dynamically balanced at factory.
   b. Motor Pulleys: Adjustable pitch. Select pulley so pitch adjustment is at the middle of adjustment range at fan design conditions.
   c. Belts: Oil resistant, static free.
   d. Motor Mount: Adjustable for belt tensioning.
9. Fan-Section Source Quality Control:
   a. Factory test fan performance for flow rate, pressure, power, air density, rotation speed, and efficiency. Establish ratings according to AMCA 210, "Laboratory Methods of Testing Fans for Rating."
10. Inlet/outlet duct collars. Galvanized collars at each inlet and outlet of the unit. Flexible duct connection isolating discharge of scroll from discharge of fan.

E. MOTORS
1. General: Comply with requirements in Division 15 Section *Motors*. Matched with fan load.
2. Noise Rating: Quiet.
3. Maximum Ambient Temperature Rating: 120 degrees F (50 degrees C).

F. COILS
1. Coil Sections: Common or individual, insulated, galvanized-steel casings for heating and cooling coils. Design and construct to facilitate removal and replacement of coil for maintenance and to ensure full airflow through coils.
2. Refrigerant Coils: Coil designed for use with R-410a refrigerant, fabricated according to ARI 410, connected with soldered fittings.
   a. Capacity Reduction: Circuit for Double control.
   b. Tubes: Copper
   c. Fins: Aluminum 8 fins per inch.

d. Fin and Tube Joint: Mechanical bond.
e. Suction and Distributor: Seamless copper tube with brazed joints.
f. Frames: 16 gauge, galvanized-steel channel frame.
g. Ratings: Design tested and rated in accordance to UL (UL recognized).
   1) Working-Pressure Rating: 250 psig.
h. Source Quality Control: 500 psig underwater (2000 psig ultimate strength).

G. FILTER SECTION
1. Filters: Comply with NFPA 90A.
2. Filter Section: Provide filter holding frames arranged for vertical orientations, with access panels on both sides of unit. Filters shall be removable from both sides.
3. Extended-Surface, Disposable Panel Filters: Factory-fabricated, dry, extended-surface filters with holding frames.
   a. Media: Fibrous material formed into deep-V-shaped.
   b. Media and Media-Grid Frame: Nonflammable cardboard.

2.07 MAKE-UP AIR UNIT

A. MANUFACTURERS
2. Manufacturers: Subject to compliance with specifications contained within this document, manufacturers offering products that may be incorporated into the work include, but are not limited to:
   a. Greenheck Fan Corporation
   b. Johnson
   c. Trane

B. MANUFACTURED UNITS
1. Unit shall be fully assembled at the factory and consist of a metal cabinet, service receptacle, motorized intake damper, supply air blower assembly, electrical control unit with all specified components and internal accessories factory installed and tested and prepared for single-point high voltage connection.

C. CABINET
1. Materials: Formed, single wall metal cabinet, fabricated to permit access to internal components for maintenance.
   a. Outside casing: 18 gauge, galvanized (G90) steel meeting ASTM A653 for components that do not receive a painted finish. Pre-painted components as supplied by the factory shall have polyester urethane paint on 18 gauge G60 galvanized steel. Base rail is 12 gauge, galvazined (G90) steel. Components that receive a painted finish per A/E specification shall be painted with a polyester urethane powder coat.
   b. Internal assemblies: 24 gauge, galvanized (G90) steel except for motor supports which shall be a minimum 14 gauge galvanized (G90) steel.
3. Cabinet Insulation: Comply with NFPA 90A and NFPA 90B and erosion requirements of UL 181.

a. Materials: Fiberglass insulation. If insulation other than fiberglass is used, it must also meet the Fire Hazard Classification shown below.
   1) Thickness: 1 inch (25 mm)
   2) Fire Hazard Classification: Maximum flame spread of 25 and smoke developed of 50, when tested in accordance with ASTM C 411.
   3) Location and application: Floor of each unit shall be insulated with either one half inch thick or 1 inch thick rigid fiberglass insulation, covered on one surface with integral aluminum foil.

4. Access panels: Unit shall be equipped with hinged access panels to provide easy access to all major components.
5. Supply Air blower assembly: Blower assembly consists of an electric motor and a belt driven, double width, double inlet forward curve blower. Assembly shall be mounted on heavy gauge galvanized rails and further mounted on minimum 1.125 inch thick neoprene vibration isolators.
6. Control center / connections: Make-Up Air Unit shall have an electrical control center where all high and low voltage connections are made. Control center shall be constructed to permit single-point high voltage power supply connections.
7. Motorized intake air dampers of low leakage type shall be factory installed.
8. Sensors are considered to be part of various optional operational modes or device controllers and are to be factory supplied and installed as specified by the A/E.
9. Service receptacle: 120 VAC GFCI service outlet shall be factory-provided and installed by contractor in a location designated by the A/E.

D. BLOWER

1. Blower section construction, Supply Air: Belt drive motor and blower shall be assembled onto a minimum 14 gauge galvanized steel platform and must have neoprene vibration isolation devices, minimum of 1 - 1/8 inches thick.
2. Blower assemblies: Shall be statically and dynamically balanced and designed for continuous operation at maximum rated fan speed and horsepower.
3. Centrifugal blower housing: Formed and reinforced steel panels to make curved scroll housing with shaped cutoff.
4. Forward curved blower (fan) wheels: Galvanized or aluminum construction with inlet flange and shallow blades curved forward in direction of airflow. Mechanically attached to shaft with set screws.
5. Blower section motor source quality control: Blower performance shall be factory tested for flow rate, pressure, power, air density, rotation speed and efficiency. Ratings are to be established in accordance with AMCA 210, "Laboratory Methods of Testing Fans for Rating".

E. MOTORS

1. General: Blower motors greater than .75 horsepower shall be "NEMA Premium" unless otherwise indicated. Compliance with EPAct minimum energy-efficiency standards for single speed ODP and TE enclosures is not acceptable. Motors shall be heavy-duty, permanently lubricated type to match the fan load and furnished at the specified voltage, phase and enclosure. Drives shall be sized for a minimum of 150% of driven horsepower and pulleys shall be fully machined cast-type, keyed and fully

secured to the fan wheel and motor shafts. Electric motors of ten horsepower or less shall be supplied with an adjustable drive pulley. Comply with requirements in Division 23 05 13, matched with fan load.

2. Motors shall be 60 cycle, 3 phase, 460 volt.

F. UNIT CONTROLS

1. The unit shall be constructed so that it can function as a stand-alone system controlled by factory-supplied controllers, thermostats and sensors.
2. Remote Panel: Manufacturer shall provide and contractor shall install a Commercial Kitchen type remote panel that functions as a remote indicator of owner-selected operating parameters.
3. Sensors to be provided with the unit:
   a. Dirty Filter Sensor
   b. 120V/24V Smoke Detector

G. FILTERS

1. Unit shall have 2" thick MERV 13 disposable pleated filters located in the outdoor air intake and shall be accessible from the exterior of the unit.

H. EXAMINATION

1. Prior to start of installation, examine area and conditions to verify correct location for compliance with installation tolerances and other conditions affecting unit performance. See unit IOM.
2. Proceed with installation only after all unsatisfactory conditions have been corrected.

I. INSTALLATION

1. Installation shall be accomplished in accordance with these written specifications, project drawings, manufacturer's installation instructions as documented in manufacturer's IOM, Best Practices and all applicable building codes.

J. CONNECTIONS

1. In all cases, industry Best Practices shall be incorporated. Connections are to be made subject to the installation requirements shown above.
   a. Piping installation requirements are specified in Division 22 (Plumbing). Drawings indicate general arrangement of piping, fittings and specialties.
   b. Duct installation and connection requirements are specified in Division 23 of this document.
   c. Electrical installation requirements are specified in Division 26 of this document.

K. FIELD QUALITY CONTROL

1. Manufacturer's Field Service: Engage a factory authorized service representative to inspect field assembled components and equipment installation, to include electrical and piping connections. Report results to A/E in writing. Inspection must include a complete startup checklist to include (as a minimum) the following: Completed Start-Up Checklists as found in manufacturer's IOM.

L. START-UP SERVICE

1. Engage a factory authorized service representative to perform startup service. Clean entire unit, comb coil fins as necessary, and install clean filters. Verify water source for compliance with manufacturer's requirements for flow and temperature. Measure and record electrical values for voltage and amperage. Refer to Division 23 "Testing, Adjusting and Balancing" and comply with provisions therein.

M. DEMONSTRATION AND TRAINING

1. Engage a factory authorized service representative to train owner's maintenance personnel to adjust, operate and maintain the entire Make-Up Air unit. Refer to Division 01 Section Closeout Procedures and Demonstration and Training.

2.08 KITCHEN EXHAUST FAN

A. Fans hall be spun steel exhaust fans shall be centrifugal belt driven type. Fan wheel shall be centrifugal backward inclined type. The wheel shall be constructed of steel and coated with a non-stick coating similar to Teflon# as manufactured by Dupont. Wheel shall include a wheel cone carefully matched to the inlet cone for precise running tolerances. Wheels shall be statically and dynamically balanced.

B. The fan housing shall be constructed of 16 ga galvaneal steel with a rigid internal support structure and shall be leakproof. The fan housing shall be constructed with a one piece windband with an integral rolled bead for added strength and shall be joined to the curbcap with a continuous robotically welded seam.

C. Fan's windband shall have a Clean Out Port, a 4 in. diameter hole on the outside of the fan's windband with a grease repellent compression rubber fit, allowing access to entire wheel for cleaning.

D. Motors shall be heavy duty ball bearing type, carefully matched to the fan load, and furnished at the specified voltage, phase and enclosure. Drive frame assembly shall be constructed of heavy gauge galvanized steel. Motors and drives shall be mounted on heavy duty true vibration isolators, out of the airstream. Fresh air for motor cooling shall be drawn into the motor compartment through a ten square inch tube free of discharge contaminants. Motors and drives shall be readily accessible for maintenance.

E. Precision ground and polished 1 in. minimum diameter fan shafts shall be mounted in cast pillow block lubricatable ball bearings. Bearings shall be selected for a minimum L10 life in excess of 100,000 hours (L50 life of 500,000 hours) at maximum cataloged operating speed. Dual drives shall be sized for a minimum of 150 % of driven horsepower. Pulleys shall be of the cast type, keyed and securely attached to the wheel and motor shafts.

F. Motor pulleys shall be adjustable for final system balancing. All fans shall have a dual belt and pulley system. A NEMA-3R disconnect switch shall be factory installed and wired from the fan motor to a junction box installed outside the motor compartment.

G. All fans shall bear the AMCA Certified Ratings Seal for sound and air performance.

H. Each fan shall bear a permanently affixed manufacturer's engraved metal nameplate containing the model number and individual serial number for future identification.

I. Fans shall be listed by Underwriters Laboratory for UL/cUL 762 Listed for all electrical components and grease removal.

J. Hinge kit shall be factory mounted to a separate base and constructed of heavy gauge hinges and shall include hold open cables.

K. Grease Trap shall include the drain connection. The unit shall collect grease and water from the fan and extract the grease from the water for ease of grease disposal.
   1) Acceptable manufacturers:
      a. Greenheck.
      b. Cook
      c. ACME

2.09 INLINE EXHAUST FAN

A. Duct mounted supply, exhaust or return fans shall be of centrifugal belt driven in-line type. The fan housing shall be of the square design constructed of heavy gauge galvanized steel and shall include square duct mounting collars.

B. Fan construction shall include two removable access panels located perpendicular to the motor mounting panel. The access panels must be of sufficient size to permit easy access to all interior components.

C. The fan wheel shall be centrifugal backward inclined, constructed of aluminum and shall include a wheel cone carefully matched to the inlet cone for precise running tolerances. Wheels shall be statically and dynamically balanced.

D. Motors shall be heavy duty ball bearing type, carefully matched to the fan load and furnished at the specified voltage, phase and enclosure. Motors and drives shall be mounted out of the airstream.

E. Precision ground and polished fan shafts shall be mounted in permanently sealed, lubricated pillow block ball bearings. Bearings shall be selected for a minimum (L10) life in excess of 100,000 hours at maximum cataloged operating speed.

F. Drives shall be sized for a minimum of 150% of driven horsepower. Pulleys shall be of the fully machined cast iron type, keyed and securely attached to the wheel and motor shafts.

G. Motor pulleys shall be adjustable for system balancing. A NEMA 1 disconnect switch

shall be provided as standard, except with explosion resistant motors, where disconnects are optional. Factory wiring shall be provided from motor to the handy box.

H. All fans shall bear the AMCA Certified Ratings Seal for both sound and air performance.

I. Each fan shall bear a permanently affixed manufacturer's nameplate containing the model number and individual serial number for future identification.

J. Acceptable manufacturers:
   a. Greenheck.
   b. Cook
   c. ACME

2.10 FLEXIBLE DUCT CONNECTIONS

A. Furnish flexible duct connections between all ducts and fans or fan units mounted or suspended using external vibration isolators and/or restraints. Fans and fan units having internal isolators and/or restraints shall not have flexible duct connections. Flexible connections shall be Ventglass. Width of connecting flexible material shall be not less than four (4) inches with three (3) inch wide metal edges and double lock hem between fabric and metal. A minimum of one (1) inch spacing shall be allowed between the fan or fan unit connections and the duct.

PART 3 - EXECUTION

3.01 HANGERS AND SUPPORTS

A. Install all hangers, inserts in new concrete construction and supports for the various parts of the system. Piping shall be hung and/or supported at intervals of not over 10 feet. Ducts shall be hung at intervals of not over 8 feet. Install riser clamps or spring hangers at tops of risers as required. Piping hung from wall shall have offset rods or brackets to support hangers.

B. Set all sleeves, inserts and pockets for risers in the forms for concrete pouring.

C. All hanger rods shall be hung from inserts in concrete, or from I-beam clamps on steel beams, or from coach screw threaded rods in wood construction. Clamps shall have retaining clips and locknut. If inserts have not been provided, hangers shall be through bolted or Cinch or Slug-In expansion bolts may be used with the permission of the Architect. When pipe or equipment is hung or supported, no part of any equipment nor any part of the building shall be stressed beyond its normal allowable working strength.

D. All steel framework and supports installed under this Section shall conform to the latest revisions of the Standard Specifications for Steel for Bridges and Buildings of the

American Society for Testing Materials. All shop fabricated framework shall have a shop coat of Lead Oxide Metal Primer, except steel in concrete shall not be painted.

3.02 SLEEVES AND INSERTS

A. All piping passing through masonry or concrete walls or through concrete floors shall be fitted with sleeves of steel pipe having flanges or wings at mid-point to keep sleeve from slipping through floor or wall. All pipes sleeves for pipes passing through floors shall extend 1/2 inch above the finished floor level except all sleeves in Mechanical Equipment Room floors shall extend 2 inches above the finish floor level. All pipes passing through or in wood partitions shall have 16 gauge galvanized iron sleeves so placed that pipes shall not contact a wood surface at any point.

B. Insulation on pipes shall pass through sleeve and the sleeve shall be sized to allow the insulation to pass through without interruption. Seal the annular opening at all sleeves passing through floors or fire partitions with Dow Corning Fire Stop System or Carborundum Company Fyre Putty installed as recommended by the manufacturer. Install 20 gauge galvanized sheet metal sleeve over the insulation that protrudes 3 inches each side of sleeve to prevent damage to the insulation.

C. All inserts in new concrete construction shall be capable of developing the full strength of the rod or bolt used in them and shall be either continuous insert type or malleable iron concrete inserts for rod sizes 3/8 inch to 7/8 inch. Continuous inserts shall have anchors every 4 inches and shall extend 1-1/2 inches above the back of the insert and shall hook to provide anchor. All inserts shall be tied to the reinforcing steel rods with wire and properly sized reinforcing rods shall be inserted through the special holes, hooks or brackets provided in or on the insert to securely anchor insert to the structure.

3.03 PIPING AND FITTINGS

A. All piping shall be cut accurately to measurements established in the building and shall be installed without springing or forcing, except where cold springing is called for on the Drawings for expansion loops. Connections to existing piping shall be made to prevent misalignment of present installation. All open ends of piping shall be covered during construction to prevent entrance of foreign material.

B. All piping shall be run true and straight.

C. All cold city water piping and all drainage piping shall be copper tubing. All connections between copper tubing and fittings in water and drainage piping shall be made with 95-5 tin antimony solder. Connections between steel pipe and copper tubing shall be made at bronze valves or bronze couplings shall be used. These connections shall be made outside of all pipe chases. No connection between steel pipe and copper pipe shall be concealed behind walls. All water piping shall have wrought copper solder joint pressure fittings. All drainage piping shall have drainage type fittings. Provide cleanouts in drainage piping at changes in directions and every 40 feet in

straight run to completely rod out the piping. Provide loop seal in drain piping from air conditioning units coil drain pans with loop seal to properly seal against the static pressure in the unit and run to floor drain or open end drain as applicable.

3.04 SHEETMETAL WORK INSTALLATION

A. Install all sheetmetal ductwork required for the various supply, return and exhaust air systems. All ducts and sheetmetal plenums shall be constructed of galvanized iron of U.S. Standard Gauge unless otherwise specified and all shall be fabricated and installed in accordance with the "HVAC Duct Construction Standards" as published by SheetMetal and Air Conditioning Contractors' National Association, Inc.

B. Ducts shall be true to the inside clear dimensions indicated on the drawings. Ducts shall be straight and smooth on the inside with neatly finished joints and shall be sealed as specified herein.

C. Ducts shall be securely anchored to the building construction in an approved manner and shall be so installed as to be completely free from vibration under all conditions of operation. Horizontal ducts shall be hung with hangers of same material as the duct from concrete inserts, beam clamps or from expansion shields. Vertical ducts shall be supported at each floor. Provide all necessary supports and cross framing as required.

D. No pipes or conduits shall pass through any duct without written approval of the Architect. Where it is impossible to re-route such pipe or conduit, the duct shall be increased at that point to maintain a constant cross-sectional area and a streamline enclosure for the pipe shall be provided. Coordinate the sheet metal installation with the work of all other trades.

3.05 INSULATION

A. Furnish all labor, equipment, accessories and materials and perform all operations necessary for the installation of all insulation for the duct systems and steam, condensate, chilled water and hot water piping systems, including all related equipment and accessories. Insulation shall be installed in a workmanlike manner and shall conform to the Code of Workmanship of the International Association of Heat and Frost Insulators and Asbestos Workers.

B. Verify that ductwork and piping has been tested for leakage before applying insulation materials.

C. Verify that all surfaces are clean, dry and free of foreign material.

D. Install materials in accordance with manufacturer's recommendations, all building codes and industry standards.

E. Continue all insulation, with or without vapor barrier, through penetrations of all walls and floors except where prohibited by code (i.e. at duct fire dampers).

F. Piping Insulation

1. Locate insulation and cover seams in least visible locations.
2. Neatly finish insulation at supports, protrusions, and interruptions.
3. Cover fittings, strainers and valves 2 inches and under in fiberglass insulated lines with rigid preformed molded or routed fiberglass pipe-fitting insulators as manufactured by ICA Hamfab or Pro-Tec-T-Kotes or with two (2) coats of insulating cement to the same thickness as the sectional insulation and finished with 6 ounce fiberglass cloth jacket pasted on and coated with fitting mastic to provide vapor seal as applicable. (PVC 25/50 rated fitting covers may be substituted for the fiberglass cloth jacket only in this application, not the rigid insulation.)
4. Provide at each hanger and/or support an insert between support shield and piping on piping 1-1/2" inches diameter or larger. Fabricate of Manville Thermo-12 or other heavy density insulating material suitable for temperature. Insulation inserts shall not be less than the following lengths:
   1-1/2" to 2-1/2" pipe size 10" long
5. For pipe exposed in Mechanical Equipment Rooms or in finished spaces below 10 feet above finished floor, finish with Manville Zeston 2000 PVC jacket and fitting covers or aluminum jacket.
6. For all exterior applications insulate piping with Cellular Glass. Fittings, joints and valves shall be insulated with segmented sections of the cellular glass pipe insulation and sealed with applicable Adhesive. Provide Waterproof Covering jacket for all insulated pipe, fittings, joints, and valves. Jacket seams shall be located on bottom side of all horizontal piping.

G. Piping Insulation Schedule

	PIPE SIZE Inches	THICKNESS Inches
1. Fiber Glass Insulation		
Cold Water	All Sizes	1
2. Cellular Glass Insulation (Exterior Piping with Waterproof Covering)		
Cold Water	All Sizes	1-1/2
3. Refrigerant Suction All Sizes	1	
Refrigerant Liquid Line	All Sizes	1
Refrigerant Hot Gas	All Sizes	3/4
Condensation Drain	All Sizes	1/2

H. Ductwork Insulation Schedule

	THICKNESS Inches	FINISH
1. Flexible Fiberglass		
Exhaust Ducts within 10 ft. of Exterior Openings	1-1/2	FSK

	Supply Air Ducts (Cooling Systems)	1-1/2	FSK
	Return Air Ducts in Unconditioned Spaces	1-1/2	FSK
	Supply and Return Ducts in Unconditioned Attics	2 1/2"	FSK
2.	Rigid Fiberglass		
	Outside Air Intake Ducts	2	FSK
	Plenums (Cooling Systems)	2	FSK
	Supply Air, Return Air and Relief Ducts In Attics	2	FSK
	Supply Air and Return Air Ducts Outdoors	2	Weatherproof (SAM)
3.	Elastomeric Foam		
	Supply Air and Return Air Ducts Outdoors	2-1/2	SB
4.	Kitchen Hood Exhaust:		
	Super Firetemp M	3	(2 Hour Rating)
	Firemaster Duct Wrap	3	(2 Hour Rating)
	Fyrewrapez	1-1/2	(2 Hour Rating)

Installation of Kitchen Hood Exhaust insulation shall be installed in accordance with the latest edition of NFPA 96 and manufacturer's recommendations.

3.06 CLEANING

A. The equipment, ductwork and piping installed under this Section shall be cleaned of foreign matter and flushed out before the system is placed into service. The HVAC Subcontractor shall make temporary connections where required for cleaning system. HVAC Subcontractor shall take precautions to prevent foreign matter from getting into equipment, piping and ductwork during construction.

B. The supplier of chemicals and water treatment equipment shall recommend and provide the chemicals for cleaning and flushing the system.

C. All equipment shall be clean and dry upon completion of work.

D. Temporary filters shall be utilized in all air handling units and unit heaters when operating during construction. These filters shall be replaced as needed during construction. New filters shall be installed in all equipment prior to occupancy by the Owner.

3.07 TESTING

A. HVAC Subcontractor shall perform all tests, other than herein specified, which may be required by local authorities or agencies.

B. Furnish all labor, material, equipment and services for the tests herein specified. Make corrections identified in tests and repeat tests until defects are corrected.

C. Equipment, piping and ductwork installed under this Section shall be tested and found tight. Concealed and/or covered piping shall be tested prior to being closed in. Tests performed shall not relieve the HVAC Subcontractor of his responsibility for leaks which may develop after the tests are made.

D. Pipe Testing

1. Pressure test piping in the presence of the Owner or his representative and any local authorities who may have jurisdiction.
2. Precautions shall be taken to prevent damage to any equipment by pressure testing of piping. After testing, equipment shall be returned to its normal position and service.
3. Test pressure shall be held for a minimum of four (4) hours with no loss of pressure.
4. Test pressure shall be 1-1/2 times maximum operating pressure or system design pressure utilizing cold water, inert gas or air.
5. Repair or replace and retest any defective material.

3.08 AIR AND WATER BALANCING

A. The HVAC Subcontractor shall employ an independent Balancing Subcontractor, acceptable to and approved by the Architect/Engineer, to balance and adjust the air and water systems.

B. Balancing and adjusting shall not begin until all HVAC systems have been installed and are in full working order. Prior to the start of balancing, the following shall be checked:

1. Rotation of all fans.
2. Dampers are free to open and close.
3. Fire and smoke dampers are open.
4. Clean filters are in place.

C. Upon completion of balancing and adjusting of the systems hereinafter specified, submit six (6) copies of the data for review and approval by the Architect/Engineer.

D. The Balancing Subcontractor shall be procured early enough in the project to allow for him/her to review the project documents and determine if sufficient components are in place to balance and adjust the systems. The Balancing Subcontractor shall provide a list of any deficient area he/she identifies.

E. Balancing Subcontractor shall provide all testing instruments, manpower, temporary connections and materials needed for balancing and adjusting of the air and water systems. All test instruments shave have been calibrated within the last six (6) months.

Balancing Subcontractor shall provide verification of calibration upon request.

F. Architect/Engineer and Owner shall be notified a minimum of five (5) days prior to balancing commencing so that a representative can be available to witness the balancing work. In addition, the Balancing Subcontractor shall (upon completion of the balancing work and report submittal), at the request of the Architect/Engineer or Owner's representative, verify the balancing readings at four (4) locations. The locations shall be chosen by the Architect/Engineer or Owner's representative.

G. All balancing and adjusting of air systems shall be done in accordance with the latest edition of the NEBB Procedural Standards for Testing, Adjusting and Balancing of Environmental Systems or the latest edition of SMACNA's HVAC Systems Testing, Adjusting and Balancing.

H. Balancing of the cooling systems shall be performed in the air conditioning season, heating systems in the heating season.

I. Prior to balancing of the air systems, and as part of the balancing report, the Balancing Subcontractor shall prepare ductwork schematics of the systems to be balanced. Schematics shall be similar to those indicated in the NEBB and SMACNA publications previously identified.

J. Air Balancing Report forms shall be similar to the standard NEBB and SMACNA forms found in the previously identified manuals. The following information shall be provided at minimum (reports for equipment and systems not indicated shall be obtained from the NEBB/SMACNA manuals or prepared by the Balancing Subcontractor. Reports prepared by the Balancing Subcontractor shall be submitted for review and approval prior to final Balancing Report submittal):

1. Air Apparatus Test Report
   a. Location.
   b. System Number.
   c. Manufacturer.
   d. Airflow, design and actual.
   e. Total CFM.
   f. Total Static Pressure.
   g. Discharge Static Pressure.
   h. Suction Static Pressure.
   i. Coil pressure drops (static pressure).
   j. Filter pressure drops.
   k. Motor volts and amps.
   l. Outside Air and Return Air CFM.
   m. Drive data.

2. Fan Test Report
   a. System Number.
   b. Location.
   c. Manufacturer.
   d. Airflow, design and actual.
   e. Total static pressure, design and actual.
   f. Inlet static pressure.
   g. Discharge static pressure.
   h. Motor and Drive data.
   i. Fan RPM.
   j. Voltage and Amperage.

3. Duct Traverse
   a. System zone/branch.
   b. Duct Size.
   c. Area.
   d. Design Velocity.
   e. Design Airflow.
   f. Test Velocity.
   g. Test Airflow.
   h. Duct Static Pressure.
   i. Air temperature.

4. Air Outlet Report
   a. Area Served.
   b. Outlet Number.
   c. Type.
   d. Size.
   e. AK factor.
   f. Velocity, design and actual.
   g. Airflow, design and actual.

K. The Balancing Subcontractor shall balance and adjust air systems to meet design requirements ± 10%. Balancing shall be accomplished by adjusting dampers, drives, etc. to obtain design requirements.

L. The HVAC Subcontractor shall cooperate and make provisions for the Balancing Subcontractor as needed to accommodate the air balancing. As part of this Contract, the HVAC Subcontractor shall provide and/or change pulleys, belts, sheaves and dampers, at no additional cost, in order to properly balance the systems to design requirements.

END OF SECTION

03/03/16