HAMDEN HIGH SCHOOL BASEBALL/MULTIPURPOSE FIELD IMPROVEMENTS

2040 DIXWELL AVENUE HAMDEN, CONNECTICUT

BID DOCUMENTS

MAY 11, 2016

GENERAL NOTES

1. TOPOGRAPHIC INFORMATION IS BASED UPON FIELD SURVEY CONDUCTED BY: MILONE & MACBROOM, TAKEN FROM A MAP ENTITLED "TOPOGRAPHIC SURVEY" PREPARED FOR ATHLETIC FIELDS AT HAMDEN HIGH SCHOOL. AT A SCALE OF 1"=20', DATED: JAN. 2, 2015
2. INFORMATION REGARDING THE LOCATION OF EXISTING UTILITIES HAS BEEN BASED UPON AVAILABLE INFORMATION AND MAY BE INCOMPLETE, AND WHERE SHOWN SHOULD BE CONSIDERED APPROXIMATE. THE LOCATION OF ALL EXISTING UTILITIES SHOULD BE CONFIRMED PRIOR TO BEGINNING CONSTRUCTION. CALL "CALL BEFORE YOU DIG", 1-800-922-4455. ALL UTILITY LOCATIONS THAT DO NOT MATCH THE VERTICAL OR HORIZONTAL CONTROL SHOWN ON THE PLANS SHALL IMMEDIATELY BE BROUGHT TO THE ATTENTION OF THE ENGINEER FOR RESOLUTION.
3. MILONE & MACBROOM INC. ACCEPTS NO RESPONSIBILITY FOR THE ACCURACY OF MAPS AND DATA WHICH HAVE BEEN SUPPLIED BY OTHERS.
4. NO WETLANDS WERE FOUND ON SITE. WATERCOURSES WERE REVIEWED AND FLAGGED BY WILLIAM ROOT, CERTIFIED SOIL SCIENTIST - MILONE AND MACBROOM, INC. IN AUGUST 2015 AND FEBRUARY 2015
5. ALL UTILITY SERVICES ARE TO BE UNDERGROUND. THE EXACT LOCATION AND SIZE OF ELECTRIC, TELEPHONE, CABLE TELEVISION AND GAS ARE TO BE DETERMINED BY THE RESPECTIVE UTILITY COMPANIES.
6. ALL DIMENSIONS AND ELEVATIONS SHALL BE VERIFIED IN THE FIELD PRIOR TO CONSTRUCTION. ANY DISCREPANCIES SHALL BE BROUGHT TO THE ATTENTION OF THE ENGINEER.
7. SEDIMENT AND EROSION CONTROL MEASURES AS DEPICTED ON THESE PLANS AND DESCRIBED WITHIN THE SEDIMENT AND EROSION CONTROL NARRATIVE SHALL BE IMPLEMENTED AND MAINTAINED UNTIL PERMANENT COVER AND STABILIZATION IS ESTABLISHED. ALL SEDIMENT AND EROSION CONTROL MEASURES SHALL CONFORM TO THE "GUIDELINES FOR SOIL EROSION AND SEDIMENT CONTROL, CONNECTICUT - 2002, AND IN ALL CASES BEST MANAGEMENT PRACTICES SHALL PREVAIL.
8. ALL DISTURBED AREAS SHALL RECEIVE A MINIMUM OF 6" TOPSOIL, AND BE SEEDED WITH GRASS, AS SHOWN ON THE PLANS.
9. ALL STORM DRAIN PIPE SHALL BE HIGH DENSITY POLYETHYLENE PIPE (HDPE) UNLESS OTHERWISE INDICATED.
10. ALL PROPOSED CONTOURS AND SPOT ELEVATIONS INDICATE FINISHED GRADE.
11. ALL CONSTRUCTION MATERIALS AND METHODS SHALL CONFORM TO THE TOWN OF HAMDEN REQUIREMENTS AND TO THE APPLICABLE SECTIONS OF THE STATE OF CONNECTICUT DEPARTMENT OF TRANSPORTATION STANDARD SPECIFICATIONS FOR ROADS, BRIDGES, AND INCIDENTAL CONSTRUCTION, FORM 816 AND ADDENDUMS
12. THE PLANS REQUIRE A CONTRACTOR'S WORKING KNOWLEDGE OF LOCAL, MUNICIPAL, WATER AUTHORITY, AND STATE CODES FOR UTILITY SYSTEMS. ANY CONFLICTS BETWEEN MATERIALS AND LOCATIONS SHOWN, AND LOCAL REQUIREMENTS SHALL BE BROUGHT TO THE ATTENTION OF THE ENGINEER PRIOR TO THE EXECUTION OF WORK. THE ENGINEER WILL NOT BE HELD LIABLE FOR COSTS INCURRED TO IMPLEMENT OR CORRECT WORK WHICH DOES NOT CONFORM TO LOCAL CODE.
13. COMPLIANCE WITH THE PERMIT CONDITIONS IS THE RESPONSIBILITY OF BOTH THE CONTRACTOR AND THE PERMITTEE.
14. THE PROPERTY CONTRACTOR MUST MAINTAIN (REPAIR/REPLACE WHEN NECESSARY) THE SILTATION CONTROL UNTIL ALL DEVELOPMENT ACTIVITY IS COMPLETED AND ALL DISTURBED AREAS ARE PERMANENTLY STABILIZED.
15. EXISTING TOPOGRAPHIC AND PLANIMETERIC FEATURES SHOWN BEYOND THE SURVEY LISTED ON NOTE 1 ARE BASED ON AVAILABLE TOWN MAPPING AND SUPPLEMENTED WITH FIELD OBSERVATIONS AND SHOULD BE CONSIDERED APPROXIMATE.
16. ANY DAMAGES TO EXISTING SITE FEATURES AND DRIVEWAYS SHALL BE REPAIRED AT THE EXPENSE OF THE CONTRACTOR.

DEMOLITION PHASE NOTES

1. ANY HAZARDOUS AND REGULATED WASTES SHOULD BE RECYCLED OR DISPOSED OF PROPERLY BY LICENSED WASTE HAULER.
2. NON-HAZARDOUS DEMOLITION MATERIAL SHOULD ALSO BE RECYCLED OR DISPOSED OF PROPERLY.
3. TOWN AND STATE ROADS MUST BE KEPT FREE OF SAND, MUD AND OTHER PROJECT-RELATED DEBRIS.

CONSTRUCTION PHASE NOTES

1. ALL SEDIMENTATION AND EROSION CONTROLS SHOULD BE INSTALLED AND THE RWA SHOULD BE GIVEN AT LEAST THREE DAYS PRIOR NOTICE TO ALLOW FOR INSPECTION, PRIOR TO THE START OF ANY OTHER CONSTRUCTION ACTIVITY.
2. REGIONAL WATER AUTHORITY INSPECTORS SHALL BE GRANTED ACCESS TO 2040 DIXWELL AVE. DURING THE ANNUAL INSPECTION PROGRAM DURING AND AFTER CONSTRUCTION.
3. THERE SHOULD BE ABSOLUTELY NO DISCHARGES OF FLUIDS OR DRY CHEMICALS TO THE ENVIRONMENT.
4. REGIONAL WATER AUTHORITY SHOULD BE NOTIFIED OF ANY SPILLS OF HAZARDOUS MATERIALS.
5. ANY HAZARDOUS MATERIALS SHOULD BE RECYCLED OR PROPERLY DISPOSED OF BY A LICENSED WASTE HAULER.
6. EROSION CONTROLS SHOULD BE INSPECTED REGULARLY AND IMMEDIATELY AFTER RAINFALL, AND MAINTAINED AND MODIFIED AS NECESSARY TO ENSURE OPTIMUM PERFORMANCE. EROSION CONTROLS SHOULD BE INSTALLED AROUND THE BASE OF ALL STOCKPILES OF EXCAVATED MATERIALS AND THE PILE SHOULD BE TEMPORARILY SEEDED OR COVERED IF IT WILL REMAIN FOR LONGER THAN ONE MONTH.
7. ALL OIL, PAINT, AND OTHER HAZARDOUS MATERIALS SHOULD BE STORED IN A SECONDARY CONTAINER AND PLACED IN A LOCKED INDOOR AREA WITH AN IMPERVIOUS FLOOR DURING NON-WORK HOURS.
8. IF ANY REFUELING IS TO BE DONE ON SITE, A DEDICATED REFUELING STATION SHOULD BE CREATED. IT SHOULD BE LOCATED AS FAR AS POSSIBLE FROM ANY STORM WATER CATCH BASINS AND PLACED ON A PAVED, IMPERVIOUS SURFACE.
9. A SUPPLY OF ABSORBENT SPILL RESPONSE MATERIAL SHOULD BE AVAILABLE ESPECIALLY DURING REFUELING TO CLEAN UP ANY SPILLS OF HAZARDOUS MATERIAL SUCH AS GASOLINE OR OIL. THE RWA SHOULD BE NOTIFIED IN THE EVENT OF A SPILL.
10. TOWN AND STATE ROADS MUST BE KEPT FREE OF SAND, MUD AND OTHER PROJECT-RELATED DEBRIS.
11. HOURS OF CONSTRUCTION SHALL BE LIMITED TO BETWEEN 7:00 AM AND 7:00 PM MONDAY THROUGH FRIDAY AND 7:00 AM TO 5:00 PM SATURDAY.

OPERATION AND MAINTENANCE PLAN (POST-CONSTRUCTION)

1. ALL CATCH BASIN SUMPS SHOULD BE INSPECTED TWO TIMES PER YEAR.
2. SEDIMENT SHOULD BE REMOVED WHEN IT EXTENDS TO WITHIN SIX INCHES OF THE OUTLET PIPE INVERT, OR TWICE ANNUALLY. THE SEDIMENT SHALL BE DISPOSED OF IN AN APPROVED LOCATION.
3. A VEGETATIVE OR IMPROVED COVER SHALL BE MAINTAINED ON ALL EARTH SURFACES TO MINIMIZE SOIL EROSION. USE OF FERTILIZER SHOULD BE MINIMIZED AND APPLIED USING PRUDENT APPLICATION PROCEDURES.
4. A LOG OF ALL INSPECTION AND CLEANING SHALL BE MAINTAINED BY THE OCCUPANT AND BE AVAILABLE FOR INSPECTION.
5. DURING CONSTRUCTION AND FOR THREE MONTHS AFTER PROJECT COMPLETION INSPECTION OF SEDIMENT AND EROSION CONTROL MEASURES SHALL BE MADE ON A WEEKLY BASIS AND AFTER RAINFALL EVENTS OF 1" OR GREATER. A LOG OF SUCH INSPECTIONS SHALL BE MAINTAINED AT THE SITE.
6. REGIONAL WATER AUTHORITY INSPECTORS SHOULD BE GRANTED ACCESS TO THE SITE TO CONDUCT ROUTINE INSPECTIONS.
7. AFTER COMPLETION OF CONSTRUCTION THE TOWN OF HAMDEN WILL ASSUME RESPONSIBILITY FOR OPERATION AND MAINTENANCE PLAN

TOWN OF HAMDEN CONDITIONS OF APPROVAL

THIS SPECIAL PERMIT & SITE PLAN WAS GRANTED AT ITS MEETING OF FEBRUARY 23, 2016. THE PERMIT IS APPROVED BY THE FOLLOWING CONDITIONS:

1. THE APPLICANT MUST OBTAIN A ZONING PERMIT.
2. PRIOR TO THE ISSUANCE OF A ZONING PERMIT, THE APPLICANT MUST SUBMIT A REVISED SITE PLAN FOR APPROVAL BY THE TOWN PLANNER AND TOWN ENGINEER, CONTAINING:
   - A. USE OF BASALTIC GRAVEL IN THE DYNAMIC STONE BASE.
   - B. EXTENSION OF THE SILT FENCING ALONG THE EAST SIDE ALONG THE ROUTE 15 RAMP, AS RECOMMENDED BY MR. BRINTON.
   - C. INSTALLATION OF A SPLASH PAD AND EROSION CONTROL MEASURES AT THE STORM WATER DISCHARGE PIPE.
   - D. MOVEMENT OF ANY LIGHT POLE IN CONFLICT WITH THE 60" STORM PIPE.
   - E. PLACEMENT OF A DEDICATED REFUELING STATION LOCATED AS FAR AS POSSIBLE FROM ANY STORM WATER CATCH BASINS, ON A PAVED SURFACE, IF A REFUELING STATION IS NEEDED.
   - F. ALL CONDITIONS OF APPROVAL.
3. SELECTION OF THE SYNTHETIC TURF PRODUCT MUST INCLUDE A REVIEW OF ITS CHEMICAL COMPOSITION. THE TURF SELECTED MUST MEET THE FOLLOWING REQUIREMENTS:
   - A. INCLUDE A LIST OF ALL THE CHEMICALS.
   - B. UNDERGO TESTING THAT CERTIFIES THE INFILL MEETS THE REQUIREMENTS ESTABLISHED BY UNDERWRITERS LABORATORIES ENVIRONMENTAL (ULE) FOR CERTIFICATION UNDER ITS GREENGUARD PROGRAM, PER REFERENCE STANDARD GGPS.006.
   - C. CONTAIN NO TRUCK TIRES.
   - D. USE ONLY POLYETHYLENE FIBERS.
   - E. EMPLOY NO PAINTED LINES CONTAINING LEAD-CHROMATE.
4. THE PROJECT WORK AND SUBSEQUENT MAINTENANCE MUST BE CARRIED OUT IN STRICT COMPLIANCE WITH THE DEMOLITION PHASE AND CONSTRUCTION PHASE NOTES AS WELL AS THE OPERATION AND MAINTENANCE PLAN ON THE TITLE SHEET.
5. THE ARTIFICIAL TURF SHOULD BE INSTALLED DURING COOLER MONTHS.
4. ALL WORK MUST BE COMPLETED BY FEBRUARY 23, 2021.
5. AFTER THE COMPLETION OF THE PROJECT:
   - A. RETEST THE CERTIFIED TURF MATERIAL TO CONFIRM THAT IT STILL MEETS THE REQUIREMENTS OF THE UNDERWRITERS LABORATORIES ENVIRONMENTAL (ULE) FOR CERTIFICATION UNDER ITS GREENGUARD PROGRAM, PER REFERENCE STANDARD GGPS.006. ANY LEVELS NOT MEETING THOSE REQUIREMENTS OR EXCEEDING EPA GUIDELINES REGARDING TOXIC SUBSTANCES MUST BE REVIEWED WITH STATE DEPARTMENT OF PUBLIC HEALTH OFFICIALS.
   - B. PROHIBIT USE OF THE PLAYING FIELD FOR THREE MONTHS.
   - C. AT THE END OF THE THREE MONTH PERIOD, PRIOR TO USE OF THE FIELD, CONDUCT A SECOND RETEST OF THE TURF MATERIAL TO CONFIRM THAT IT STILL MEETS THE REQUIREMENTS OF THE UNDERWRITERS LABORATORIES ENVIRONMENTAL (ULE) FOR CERTIFICATION UNDER ITS GREENGUARD PROGRAM, PER REFERENCE STANDARD GGPS.006. ANY LEVELS NOT MEETING THOSE REQUIREMENTS OR EXCEEDING EPA GUIDELINES REGARDING TOXIC SUBSTANCES MUST BE REVIEWED WITH STATE DEPARTMENT OF PUBLIC HEALTH OFFICIALS.
   - D. CONDUCT ANNUAL AIR AND STORM WATER RETESTING OF THE NEW ALL-PURPOSE FIELD AND THE EXISTING FOOTBALL FIELD PRIOR TO FALL SPORTS, TO CONFIRM THAT THE TURF STILL MEETS THE REQUIREMENTS OF THE UNDERWRITERS LABORATORIES ENVIRONMENTAL (ULE) FOR CERTIFICATION UNDER ITS GREENGUARD PROGRAM, PER REFERENCE STANDARD GGPS.006. THE RETESTING MAY BE DISCONTINUED AFTER THREE YEARS IF THERE ARE NO EXCEEDANCES. ANY LEVELS NOT MEETING THOSE REQUIREMENTS OR EXCEEDING EPA GUIDELINES REGARDING TOXIC SUBSTANCES MUST BE REVIEWED WITH STATE DEPARTMENT OF PUBLIC HEALTH OFFICIALS.
   - E. CONTINUE TO FOLLOW THE SCIENTIFIC DISCUSSION ABOUT CRUMB RUBBER TURF AND ASK FOR ANNUAL UPDATES FROM THE STATE DEPARTMENT OF PUBLIC HEALTH.
   - F. MONITOR ACTIVITY CLOSELY DURING HOT WEATHER TO ENSURE THAT ATHLETES ARE NOT AT RISK OF EXHAUSTION. USE OF THE FIELD IN SUMMER MONTHS SHOULD BE DISCOURAGED. THE APPLICANT MUST FOLLOW THE GUIDELINES ESTABLISHED BY THE CONNECTICUT INTERSCHOLASTIC ATHLETIC CONFERENCE FOR SAFE PLAY AT VARIOUS HEAT INDEX VALUES.
   - G. IF NECESSARY, THE LIGHTING SHOULD BE ADJUSTED SO THAT THE LIGHTS DO NOT SHINE IN THE WINDOWS OF THE APARTMENT BUILDINGS TO THE WEST.
   - H. THE CATCH-BASINS SHOULD BE CLEANED OF SEDIMENT AND DEBRIS AT LEAST ONCE A YEAR AND WHENEVER THE SUMPS ARE MORE THAN HALF FULL.
   - I. THE RWA MUST BE GIVEN ACCESS TO INSPECT THE PROPERTY ON AN ANNUAL BASIS.

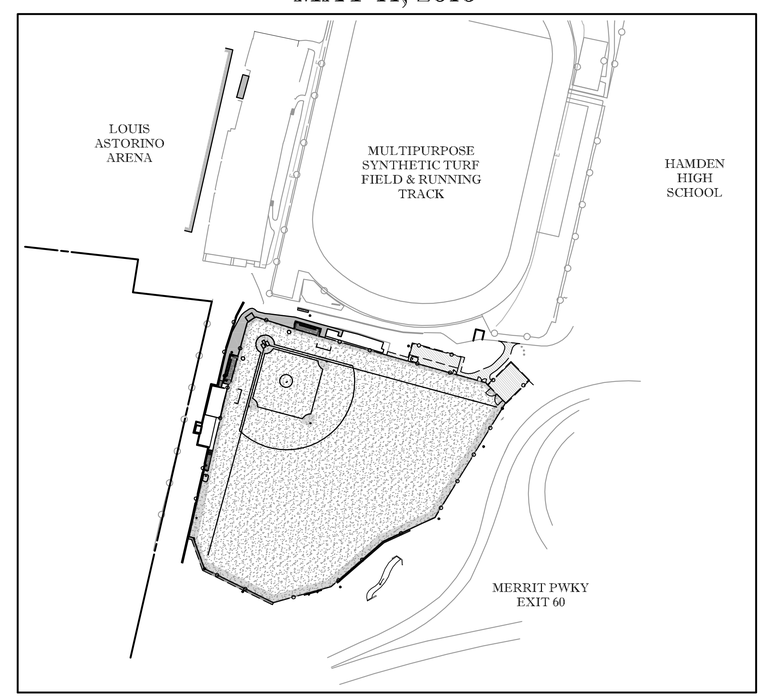

PROJECT SITE VICINITY MAP:

0 50' 100'
SCALE: 1"=100'

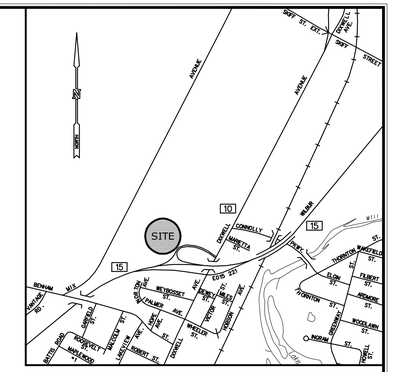

LOCATION MAP
SCALE: 1"=1000'

LEGEND

EXISTING		PROPOSED
	PROPERTY LINE	
	SETBACK LINE	
70	MAJOR CONTOUR	70
68	MINOR CONTOUR	68
+ SPOT	SPOT GRADE	+70.5
	TREE LINE	
	TREE/SHRUB	
	STONEWALL	
	CHAIN LINK FENCE	
	SITE LIGHT	
	EXISTING CATCH BASIN	
	EXISTING MANHOLE/YARD DRAIN	
	SANITARY SEWER W/MANHOLE	
	STORM DRAIN W/CATCH BASIN	
	WATER MAIN	
W	GAS MAIN	
G	ELECTRIC LINE	E
E	ELECTRIC, TELEPHONE, CABLE	ETC
ETC	UTILITY POLE	
	TRAFFIC SIGN	
	IRON PIPE	
	MONUMENT	
	EDGE OF PAVEMENT W/CURB	
	EDGE OF PAVEMENT	
	AREA/YARD DRAIN	

LIST OF DRAWINGS:

	TITLE SHEET
01	SITE PLAN - EXISTING CONDITIONS
02	SITE PLAN - REMOVALS
03	SITE PLAN - LAYOUT
04	SITE PLAN - GRADING AND SEDIMENT AND EROSION CONTROLS
05	SITE PLAN - UTILITIES
05A	SITE PLAN - UTILITIES 'TURF OPTION B'
06-11	STRUCTURAL PLANS
12	SITE ELECTRICAL PLAN
13	ELECTRICAL NOTES AND SCHEDULE
14	ELECTRICAL DIAGRAMS AND DETAILS
15-20	SITE DETAILS

MILONE & MACBROOM®
Engineering, Landscape Architecture and Environmental Science
99 Realty Drive
Cheshire, Connecticut 06410
(203) 271-1773 Fax (203) 272-9733
www.miloneandmacbroom.com

811
Know what's below. Call before you dig.
www.cbyd.com

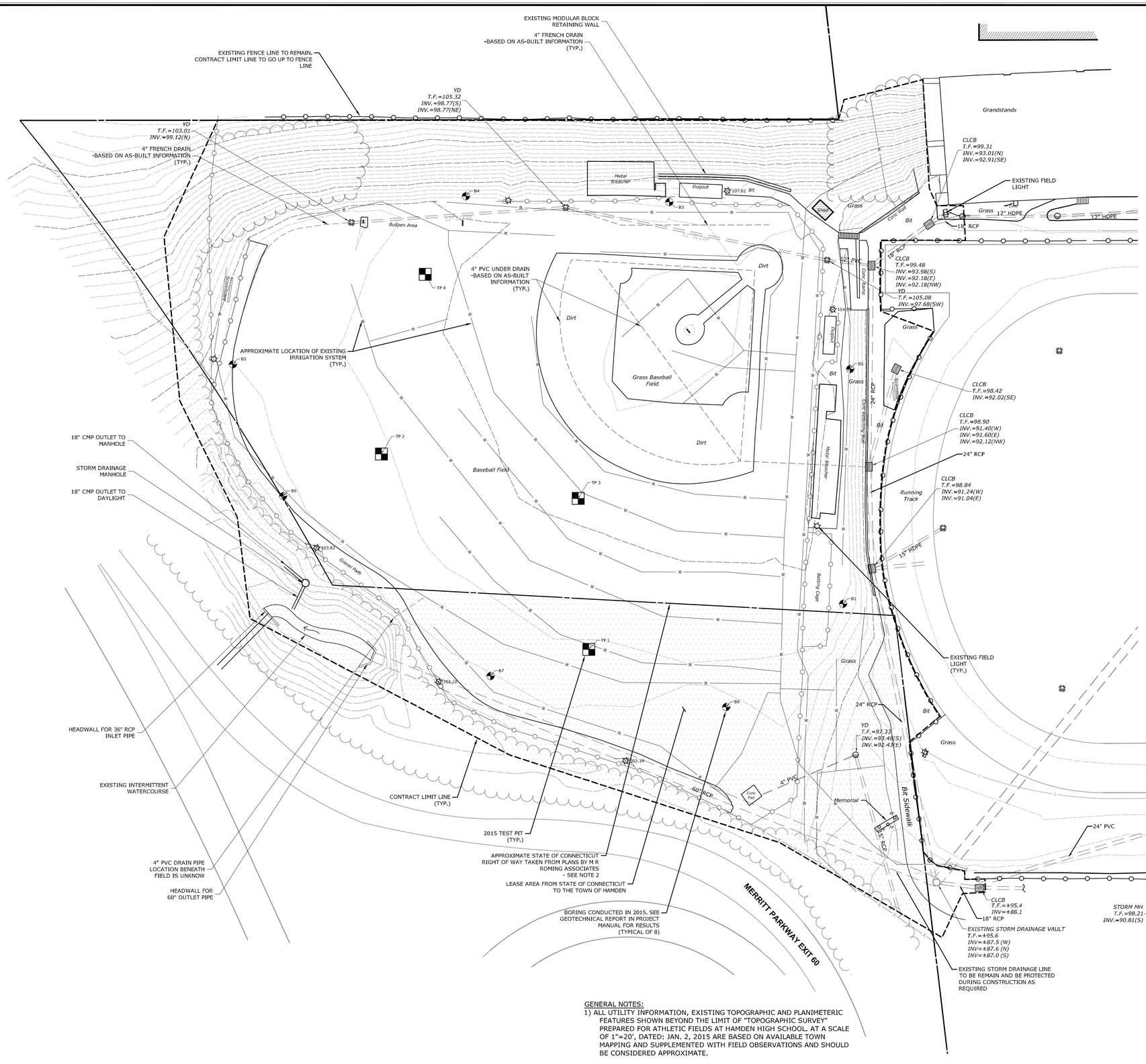

LEGEND

- CHAIN LINK FENCE
- DRAINAGE MANHOLE
- SANITARY MANHOLE
- MANHOLE
- YARD DRAIN
- CATCH BASIN
- WATER VALVE
- GATE POST
- POST
- LIGHT POST
- SIGN
- IRRIGATION LINE
- BORING - (SEE GEOTECH REPORT IN PROJECT MANUAL)

GENERAL NOTES:

1) ALL UTILITY INFORMATION, EXISTING TOPOGRAPHIC AND PLANIMETERIC FEATURES SHOWN BEYOND THE LIMIT OF "TOPOGRAPHIC SURVEY" PREPARED FOR ATHLETIC FIELDS AT HAMDEN HIGH SCHOOL. AT A SCALE OF 1"=20', DATED: JAN. 2, 2015 ARE BASED ON AVAILABLE TOWN MAPPING AND SUPPLEMENTED WITH FIELD OBSERVATIONS AND SHOULD BE CONSIDERED APPROXIMATE.

2) EXISTING PROPERTY BOUNDARY TAKEN FROM "TOPOGRAPHIC SURVEY" PREPARED FOR OUTDOOR ATHLETIC COMPLEX AT HAMDEN HIGH SCHOOL. AT A SCALE OF 1"=40', DATED: AUG. 5, 1999

Test Pit: 1
Date: 1/12/2015
00"–12" TOPSOIL
14"–40" RED BROWN FINE SAND, LITTLE SILT. VERY COMPACT WITH GRAVEL AND COBBLES

NOTE: HARDPAN BELOW TOPSOIL

Test Pit: 2
Date: 1/12/2015
00"–12" TOPSOIL
14"–40" RED BROWN FINE SAND, LITTLE SILT. VERY COMPACT WITH GRAVEL AND COBBLES

NOTE: HARDPAN BELOW TOPSOIL

Test Pit: 3
Date: 1/12/2015
00"–16" TOPSOIL
16"–48" RED BROWN FINE SAND, LITTLE SILT. VERY COMPACT WITH GRAVEL AND COBBLES

NOTE: HARDPAN BELOW TOPSOIL. TOPSOIL LAYER WAS SEMI–SATURATED

Test Pit: 4
Date: 1/12/2015
00"–10" TOPSOIL
10"–18" RED BROWN COMPACT GRAVEL SAND
18"–50" DARK BROWN GENERAL FILL WITH COBBLES AND BOULDERS, SILT LOAM

MILONE & MACBROOM®
99 Realty Drive
Cheshire, Connecticut 06410
(203) 271-1773 Fax (203) 272-9733
www.miloneandmacbroom.com

DESCRIPTION	DATE	BY

SITE PLAN - EXISTING CONDITIONS

HAMDEN HIGH SCHOOL BASEBALL / MULTIPURPOSE FIELD IMPROVEMENTS

2040 DIXWELL AVENUE
HAMDEN, CONNECTICUT

KCF	CEH	DJK
DESIGNED	DRAWN	CHECKED

SCALE: 1"=30'

DATE: MAY 11, 2016

PROJECT NO.: 1228-61

SHEET NAME: 01

Copyright Milone & MacBroom, Inc - 2015

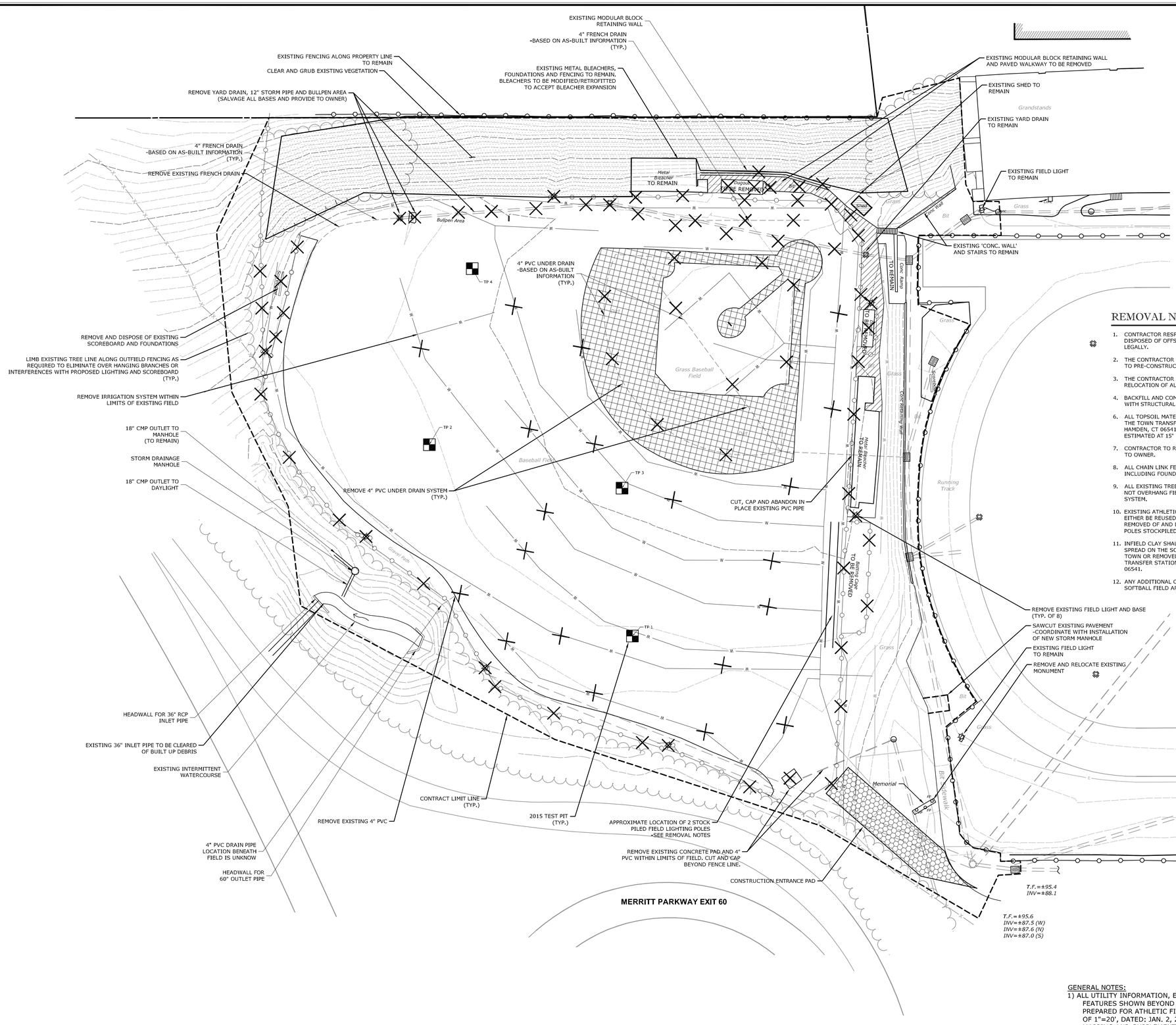

LEGEND

- PROJECT LIMIT LINE
- REMOVE SITE FEATURE
- CONSTRUCTION ENTRANCE PAD
- EXISTING BITUMINOUS TO BE REMOVED
- INFIELD MIX TO BE REMOVED AND SPREAD ON SOFTBALL FIELD
- CLEAR AND GRUB EXISTING VEGETATION

REMOVAL NOTES

1. CONTRACTOR RESPONSIBLE FOR HAULING ALL REMOVED MATERIAL TO BE DISPOSED OF OFFSITE AND DISPOSING OF MATERIAL PROPERLY AND LEGALLY.
2. THE CONTRACTOR IS RESPONSIBLE TO REPAIR ALL DISTURBED AREAS BACK TO PRE-CONSTRUCTION CONDITIONS.
3. THE CONTRACTOR IS RESPONSIBLE FOR THE PROTECTION AND/OR RELOCATION OF ALL UTILITIES ABOVE AND BELOW GRADE AS NEEDED.
4. BACKFILL AND COMPACT ALL AREAS OF REMOVED STRUCTURES AND PIPE WITH STRUCTURAL FILL.
6. ALL TOPSOIL MATERIAL REMOVED TO BE TRANSPORTED BY CONTRACTOR TO THE TOWN TRANSFER STATION LOCATED AT 231 WINTERGREEN AVENUE, HAMDEN, CT 06541. APPROXIMATE AVERAGE DEPTH OF TOPSOIL IS ESTIMATED AT 15"
7. CONTRACTOR TO REMOVE IRRIGATION HEADS AND VALVES AND PROVIDE TO OWNER.
8. ALL CHAIN LINK FENCING WITHIN PROJECT LIMIT LINE TO BE REMOVED, INCLUDING FOUNDATIONS AND REMOVED OF OFF SITE.
9. ALL EXISTING TREES ALONG OUTFIELD TO BE LIMBED AS NECESSARY TO NOT OVERHANG FIELD AND TO NOT INTERFERE WITH PROPOSED LIGHTING SYSTEM.
10. EXISTING ATHLETIC FIELD LIGHT POSTS WITHIN PROJECT LIMIT LINE SHALL EITHER BE REUSED AS PART OF THE NEW FIELD LIGHTING SYSTEM OR REMOVED OF AND DISPOSED OFF-SITE IN A LEGAL MANNER. (INCLUDING 2 POLES STOCKPILED FROM PREVIOUS PROJECT)
11. INFIELD CLAY SHALL BE REMOVED AND STOCKPILED. CLAY IS TO BE SPREAD ON THE SOFTBALL INFIELD DIAMOND PER THE DIRECTION OF THE TOWN OR REMOVED AND TRANSPORTED BY CONTRACTOR TO THE TOWN TRANSFER STATION LOCATED AT 231 WINTERGREEN AVENUE, HAMDEN, CT 06541.
12. ANY ADDITIONAL CLAY STOCKPILED ON SITE SHALL BE MOVED TO THE SOFTBALL FIELD AREA PER THE DIRECTION OF THE TOWN.

GENERAL NOTES:

1) ALL UTILITY INFORMATION, EXISTING TOPOGRAPHIC AND PLANIMETERIC FEATURES SHOWN BEYOND THE LIMIT OF "TOPOGRAPHIC SURVEY" PREPARED FOR ATHLETIC FIELDS AT HAMDEN HIGH SCHOOL. AT A SCALE OF 1"=20', DATED: JAN. 2, 2015 ARE BASED ON AVAILABLE TOWN MAPPING AND SUPPLEMENTED WITH FIELD OBSERVATIONS AND SHOULD BE CONSIDERED APPROXIMATE.

2) EXISTING PROPERTY BOUNDARY TAKEN FROM "TOPOGRAPHIC SURVEY" PREPARED FOR OUTDOOR ATHLETIC COMPLEX AT HAMDEN HIGH SCHOOL. AT A SCALE OF 1"=40', DATED: AUG. 5, 1999

MILONE & MACBROOM®
99 Realty Drive
Cheshire, Connecticut 06410
(203) 271-1773 Fax (203) 272-9733
www.milloneandmacbroom.com

DESCRIPTION	DATE	BY

SITE PLAN - REMOVALS

HAMDEN HIGH SCHOOL
BASEBALL / MULTIPURPOSE FIELD IMPROVEMENTS
2040 DIXWELL AVENUE
HAMDEN, CONNECTICUT

KCF	CEH	DJK
DESIGNED	DRAWN	CHECKED

SCALE: 1"=30'

DATE: MAY 11, 2016

PROJECT NO.: 1228-61

SHEET NAME: 02

Copyright Milone & MacBroom, Inc - 2015

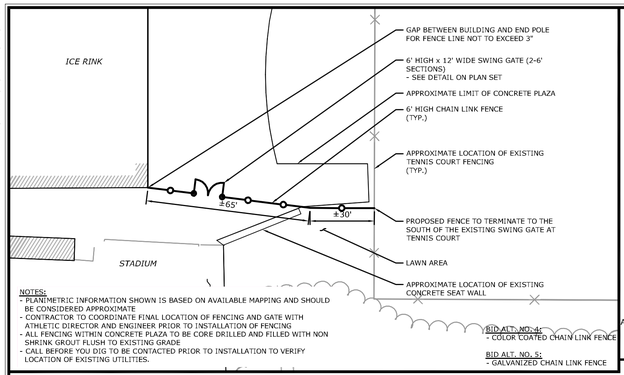

NOTES:
- PLANIMETRIC INFORMATION SHOWN IS BASED ON AVAILABLE MAPPING AND SHOULD BE CONSIDERED APPROXIMATE
- CONTRACTOR TO COORDINATE FINAL LOCATION OF FENCING AND GATE WITH ATHLETIC DIRECTOR AND ENGINEER PRIOR TO INSTALLATION OF FENCING
- ALL FENCING WITHIN CONCRETE PLAZA TO BE CORE DRILLED AND FILLED WITH NON SHRINK GROUT FLUSH TO EXISTING GRADE
- CALL BEFORE YOU DIG TO BE CONTACTED PRIOR TO INSTALLATION TO VERIFY LOCATION OF EXISTING UTILITIES.

BID ALT. NO.4 AND NO. 5 - FENCING AT ICE RINK

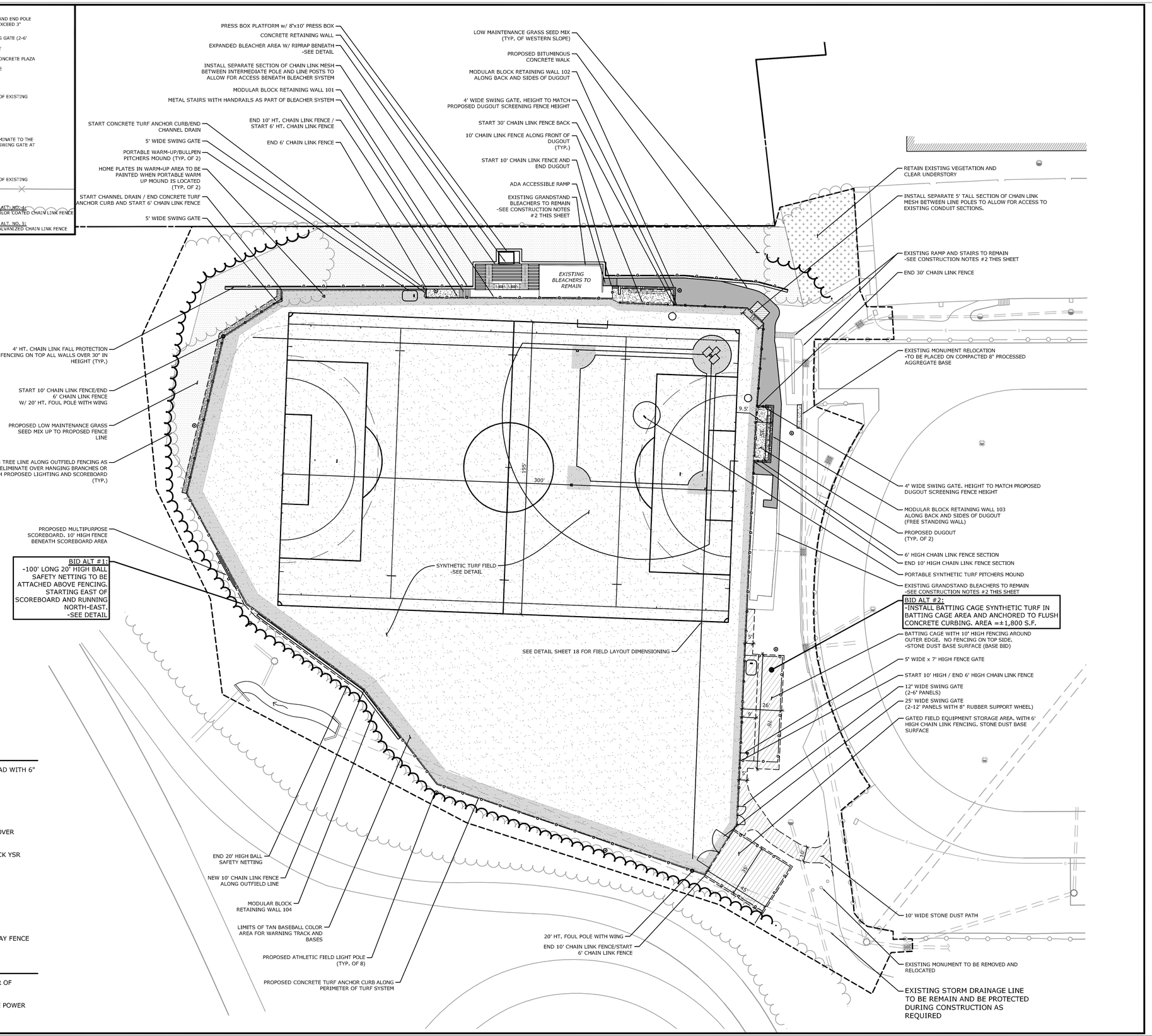

LEGEND

- NEW BITUMINOUS CONCRETE WALKWAY
- SLOPE WITH LOW MAINTENANCE GRASS SEED MIX
- SYNTHETIC TURF
- CONCRETE PAD
- STONE DUST SURFACE

LAYOUT NOTES

1. ALL AREAS OF DISTURBANCE OUTSIDE OF THE PROPOSED FENCE LINE ARE TO BE SPREAD WITH 6" MIN. OF TOPSOIL, FERTILIZED AND LIMED AS REQUIRED AND SEEDED TO LAWN.

SYNTHETIC FIELD NOTES:

1. PROPOSED SYNTHETIC FIELD SIZE = ±110,000 S.F.
2. TURF FIELD SYSTEM OPTIONS:
   - **TURF OPTION 1** - 2.5" HT. DUAL FIBER WITH CRUMB RUBBER/SILICA SAND INFILL OVER DYNAMIC STONE BASE. SEE SHEETS 5 & 16 FOR ADDITIONAL DETAILS.
   - **TURF OPTION 2** - 1.75" HT. DUAL FIBER WITH 100% ENVIROFILL INFILL OVER BROCK YSR SHOCK PAD. SEE SHEETS 5A & 16 FOR ADDITIONAL DETAILS.
3. FIELD MARKINGS TO INCLUDE:
   - TUFTED/INLAID BASEBALL BASE AND WARNING TRACK AREAS - COLOR - TAN
   - TUFTED/INLAID BASEBALL STRIPING - COLOR - WHITE
   - TUFTED/INLAID SOCCER STRIPING - COLOR - YELLOW (195'W x 300'L)
   - TUFTED/INLAID FIELD HOCKEY STRIPING - COLOR: RED
3. ALL PROPOSED LIGHT POLE BASES ARE TO BE OUTSIDE OF THE PROPOSED FIELD OF PLAY FENCE LINE.

CONSTRUCTION NOTES

1. PROPOSED LIGHTING SYSTEM TO BE INSTALLED PRIOR TO INSTALLATION OF TOP LAYER OF DYNAMIC STONE. INCLUDING LIGHT POLE BASES, LIGHT POLES, AND LIGHT FIXTURES.
2. EXISTING BLEACHERS, CONCRETE RAMP TO REMAIN AND STAIRS TO REMAIN ARE TO BE POWER WASHED PRIOR TO PROJECT COMPLETION.

MILONE & MACBROOM®
99 Realty Drive
Cheshire, Connecticut 06410
(203) 271-1773 Fax (203) 272-9733
www.milloneandmacbroom.com

DESCRIPTION	DATE	BY

SITE PLAN - LAYOUT

HAMDEN HIGH SCHOOL BASEBALL / MULTIPURPOSE FIELD IMPROVEMENTS

2040 DIXWELL AVENUE
HAMDEN, CONNECTICUT

KCF	CEH	DJK
DESIGNED	DRAWN	CHECKED

SCALE: 1"=30'

DATE: MAY 11, 2016

PROJECT NO.: 1228-61

SHEET NAME: 03

Copyright Milone & MacBroom, Inc - 2015

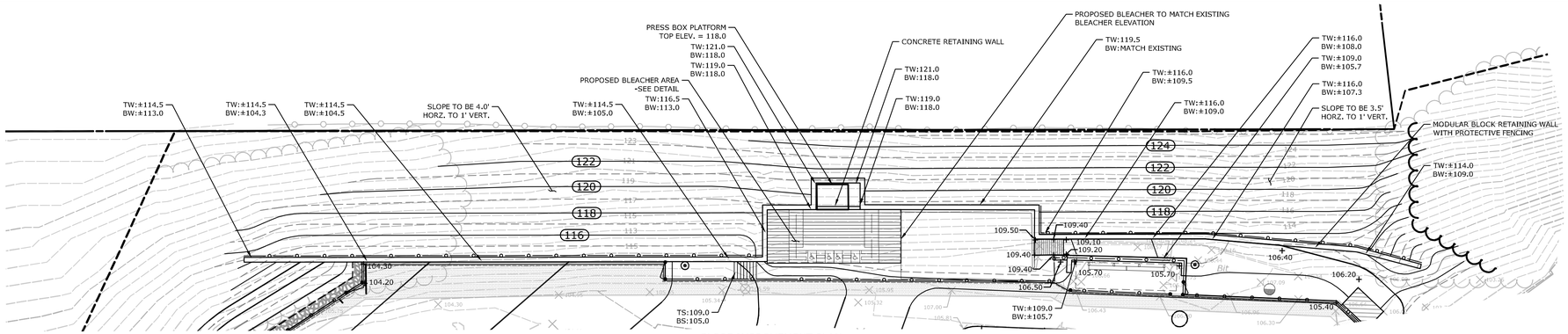

SLOPE IMPROVEMENT PLAN

SCALE:1"=20'

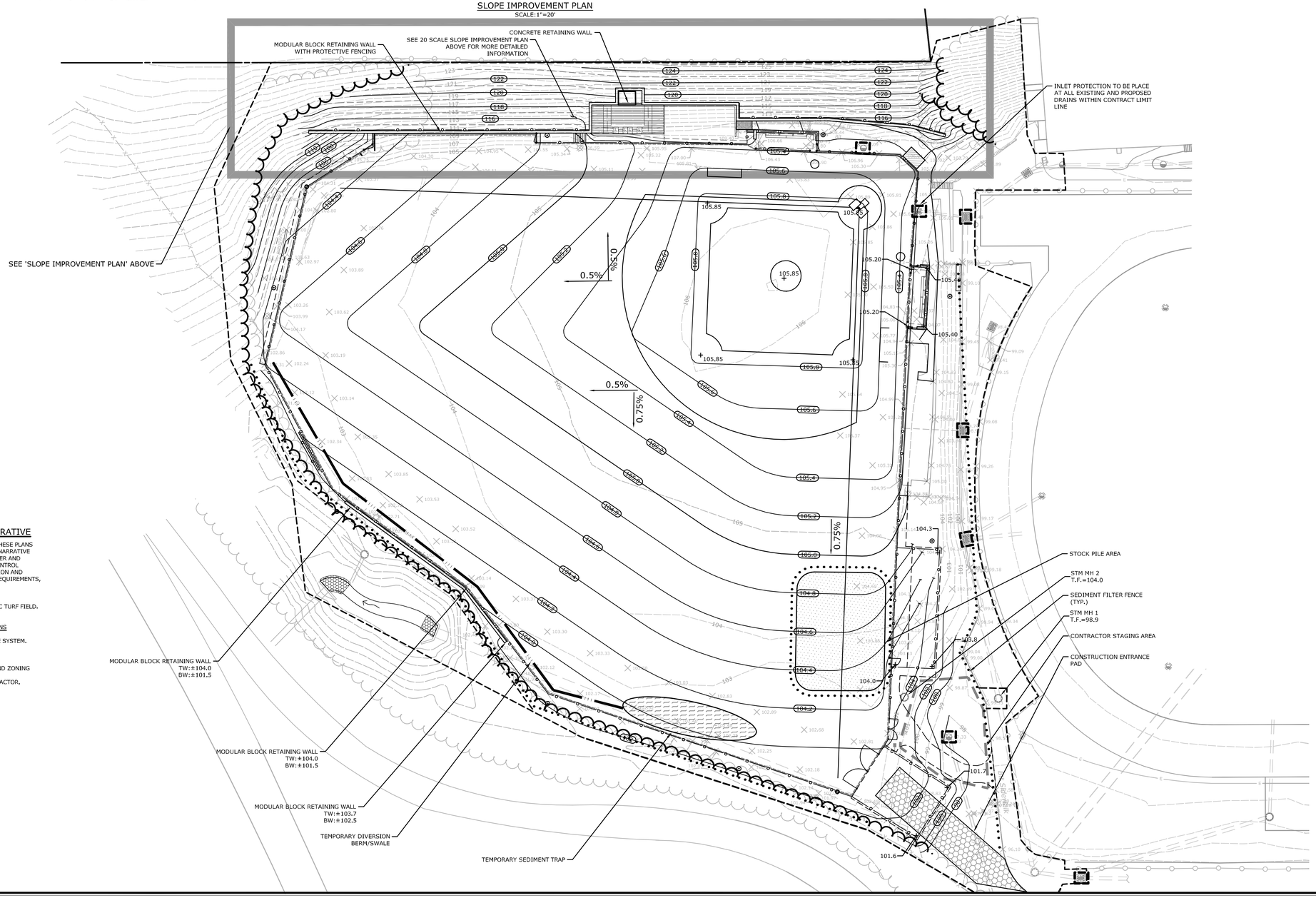

SOIL EROSION AND SEDIMENT CONTROL NARRATIVE

SEDIMENT AND EROSION CONTROL MEASURES AS DEPICTED ON THESE PLANS AND DESCRIBED WITHIN THE SEDIMENT AND EROSION CONTROL NARRATIVE SHALL BE IMPLEMENTED AND MAINTAINED UNTIL PERMANENT COVER AND STABILIZATION IS ESTABLISHED. ALL SEDIMENT AND EROSION CONTROL MEASURES SHALL CONFORM TO THE "GUIDELINES FOR SOIL EROSION AND SEDIMENT CONTROL, CONNECTICUT - 2002", TOWN OF HAMDEN REQUIREMENTS, AND IN ALL CASES BEST MANAGEMENT PRACTICES SHALL PREVAIL.

1.PURPOSE AND DESCRIPTION OF PROJECT
A. THE CONVERSION OF AN EXISTING GRASS FIELD TO SYNTHETIC TURF FIELD.
B. DISTURBED AREA: ±4.0 ACRES

2.IDENTIFICATION OF EROSION AND SEDIMENT CONTROL CONCERNS
A. CUTS AND FILLS ASSOCIATED WITH FIELD CONSTRUCTION.
B. PROTECTION OF EXISTING AND PROPOSED STORM DRAINAGE SYSTEM.
C. PROTECTION OF OFF SITE WATERCOURSE

3.IDENTIFICATION OF OTHER POSSIBLE PERMITS
- PLANNING AND ZONING SPECIAL PERMIT, INLAND WETLANDS, AND ZONING BOARD OF APPEALS
- BUILDING PERMITS WILL BE THE RESPONSIBILITY OF THE CONTRACTOR.

EROSION CONTROL LEGEND

- CONSTRUCTION ENTRANCE
- SEDIMENT FILTER FENCE
- HAYBALE REINFORCEMENT
- TEMPORARY STOCKPILE SURROUND WITH SEDIMENT FILTER FENCE
- INLET PROTECTION
- TEMPORARY SEDIMENT TRAP
- TEMPORARY DIVERSION BERM/SWALE

MILONE & MACBROOM®
99 Realty Drive
Cheshire, Connecticut 06410
(203) 271-1773 Fax (203) 272-9733
www.milloneandmacbroom.com

DESCRIPTION	DATE	BY

SITE PLAN - GRADING AND SEDIMENT AND EROSION CONTROLS

HAMDEN HIGH SCHOOL
BASEBALL / MULTIPURPOSE FIELD IMPROVEMENTS
2040 DIXWELL AVENUE
HAMDEN, CONNECTICUT

KCF	CEH	DJK
DESIGNED	DRAWN	CHECKED

SCALE: AS NOTED

DATE: MAY 11, 2016

PROJECT NO.: 1228-61

SHEET NAME: 04

Copyright Milone & MacBroom, Inc - 2015

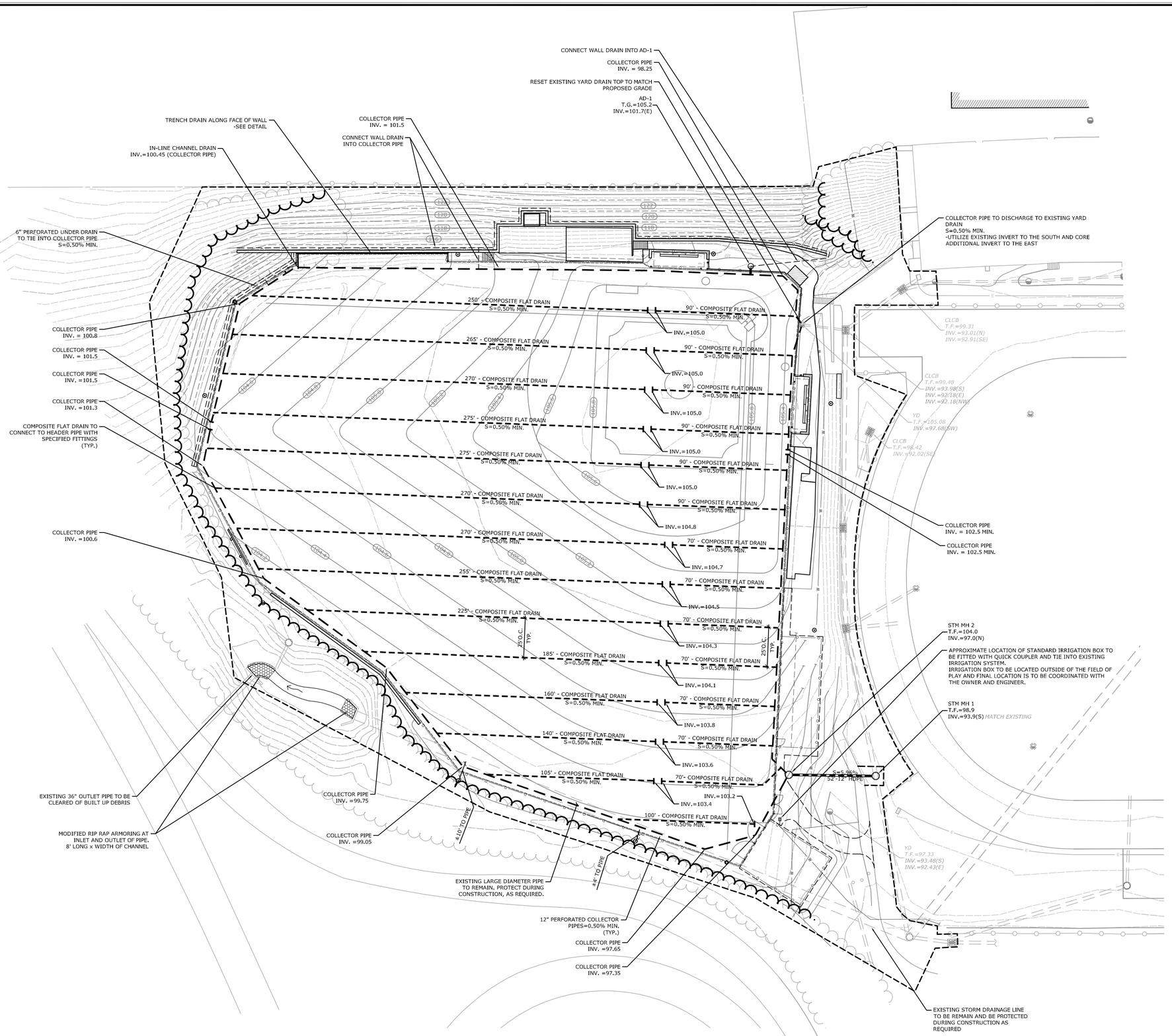

MILONE & MACBROOM®
99 Realty Drive
Cheshire, Connecticut 06410
(203) 271-1773 Fax (203) 272-9733
www.milloneandmacbroom.com

DESCRIPTION	DATE	BY

SITE PLAN - UTILITIES

HAMDEN HIGH SCHOOL
BASEBALL / MULTIPURPOSE FIELD IMPROVEMENTS
2040 DIXWELL AVENUE
HAMDEN, CONNECTICUT

KCF	CEH	DJK
DESIGNED	DRAWN	CHECKED

SCALE: 1"=30'

DATE: MAY 11, 2016

PROJECT NO.: 1228-61

SHEET NAME: 05

Copyright Milone & MacBroom, Inc - 2015

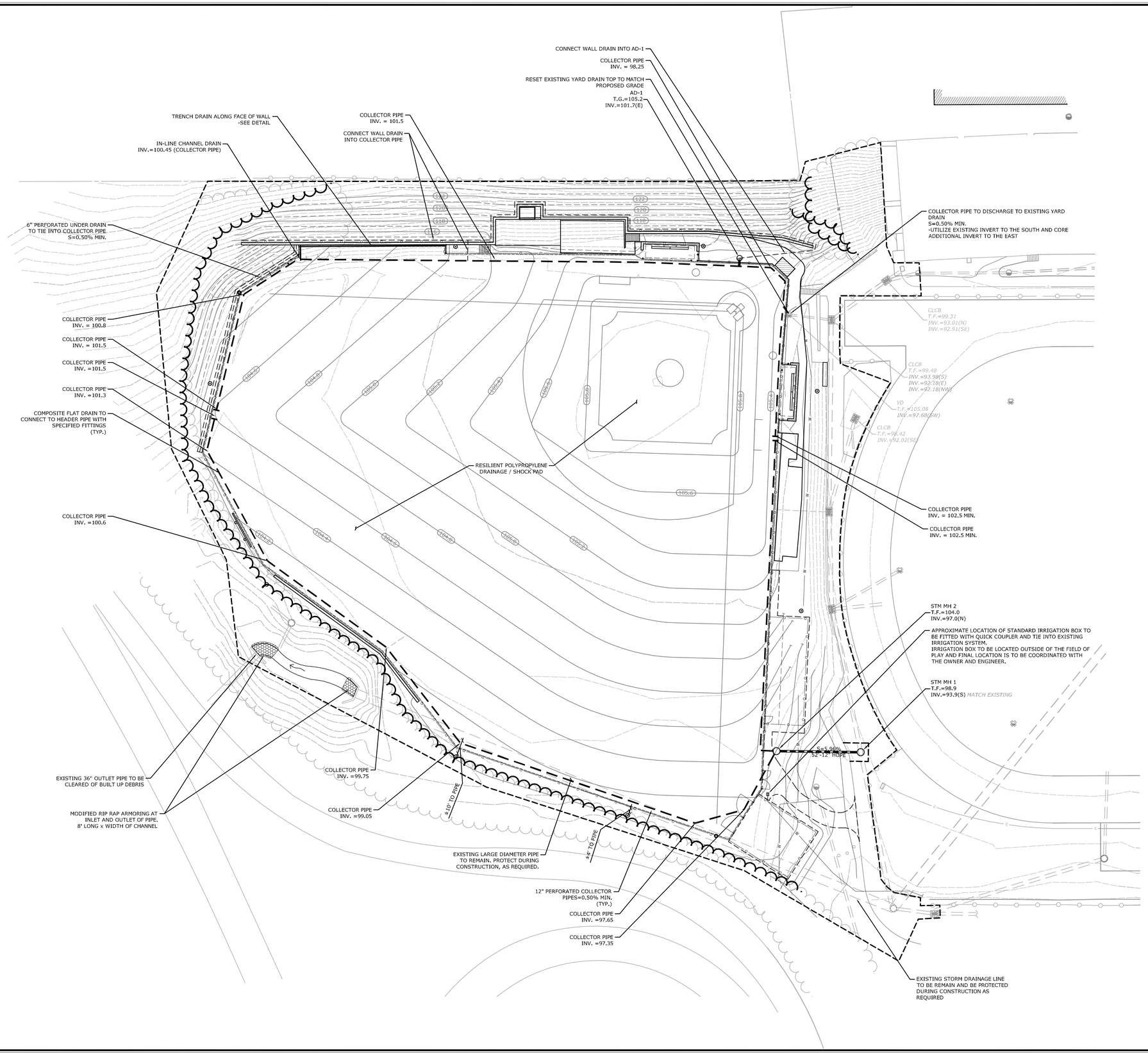

MILONE & MACBROOM®
99 Realty Drive
Cheshire, Connecticut 06410
(203) 271-1773 Fax (203) 272-9733
www.milloneandmacbroom.com

DESCRIPTION	DATE	BY

SITE PLAN - UTILITIES 'TURF SYSTEM B'

HAMDEN HIGH SCHOOL
BASEBALL / MULTIPURPOSE FIELD IMPROVEMENTS
2040 DIXWELL AVENUE
HAMDEN, CONNECTICUT

KCF	CEH	DJK
DESIGNED	DRAWN	CHECKED

SCALE: 1"=30'

DATE: MAY 11, 2016

PROJECT NO.: 1228-61

SHEET NAME: 05A

Copyright Milone & MacBroom, Inc - 2015

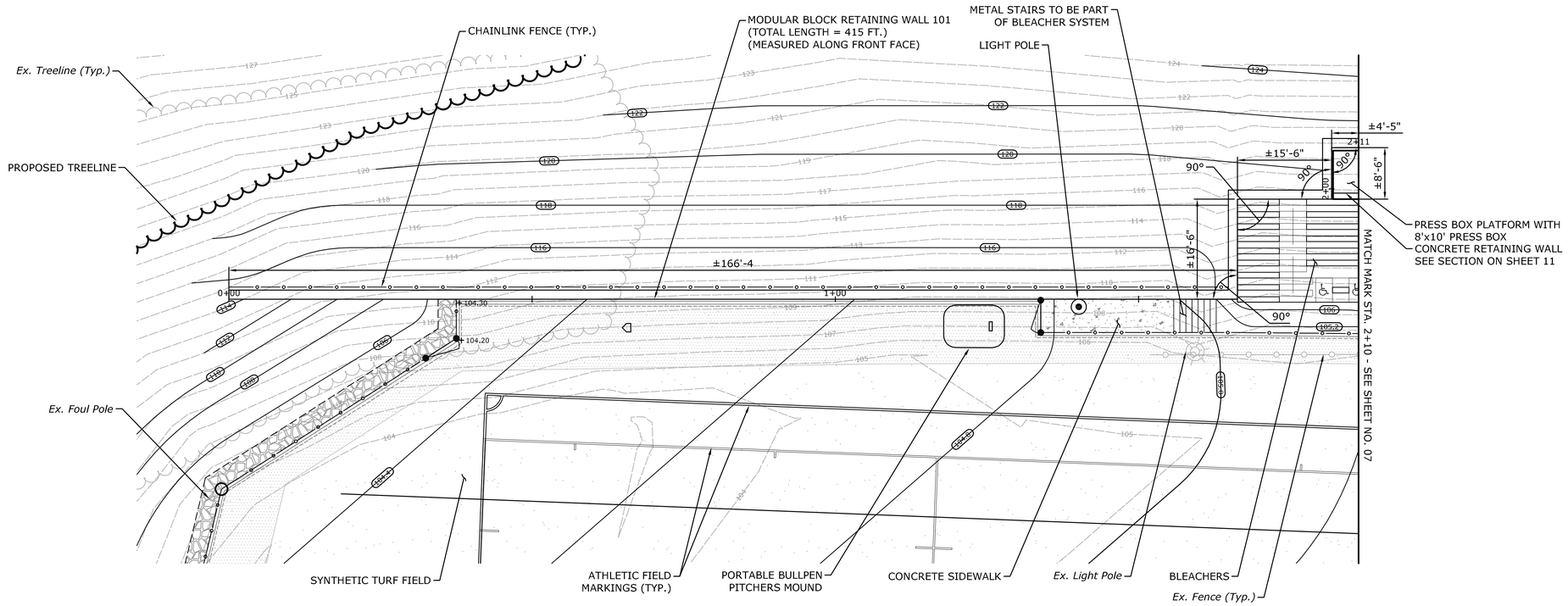

MODULAR BLOCK RETAINING WALL 101 - PLAN

SCALE: 1"=10'-0"

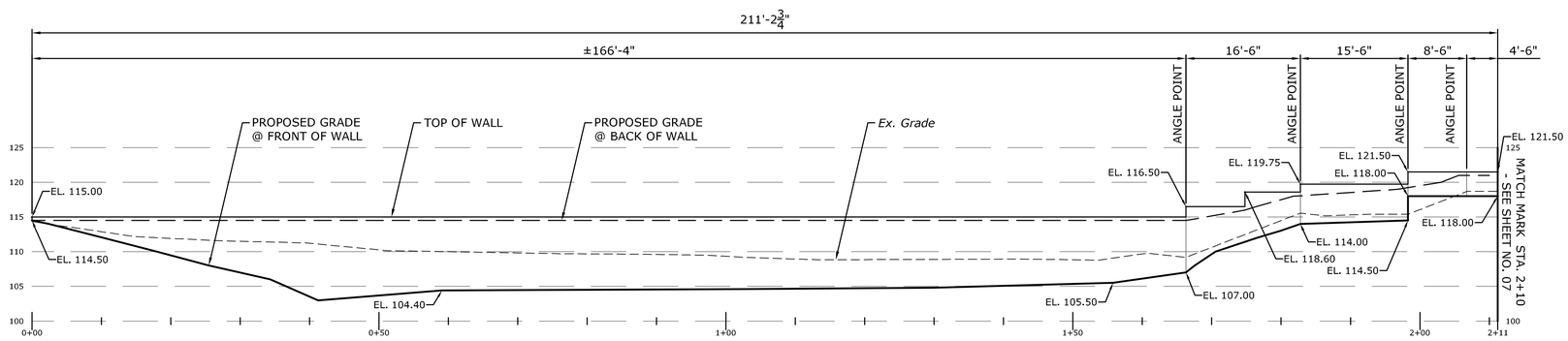

MODULAR BLOCK RETAINING WALL 101 - ELEVATION

SCALE: 1"=10-0"

MILONE & MACBROOM®
99 Realty Drive
Cheshire, Connecticut 06410
(203) 271-1773 Fax (203) 272-9733
www.milloneandmacbroom.com

DESCRIPTION	DATE	BY

STRUCTURAL PLANS

HAMDEN HIGH SCHOOL
BASEBALL / MULTIPURPOSE FIELD IMPROVEMENTS

2040 DIXWELL AVENUE
HAMDEN, CONNECTICUT

KP	NP	KP
DESIGNED	DRAWN	CHECKED

SCALE: 1"=10'

DATE: MAY 11, 2016

PROJECT NO.: 1228-61

DRAWING NO.:

SHEET NO.: 06

Copyright Milone & MacBroom, Inc - 2016

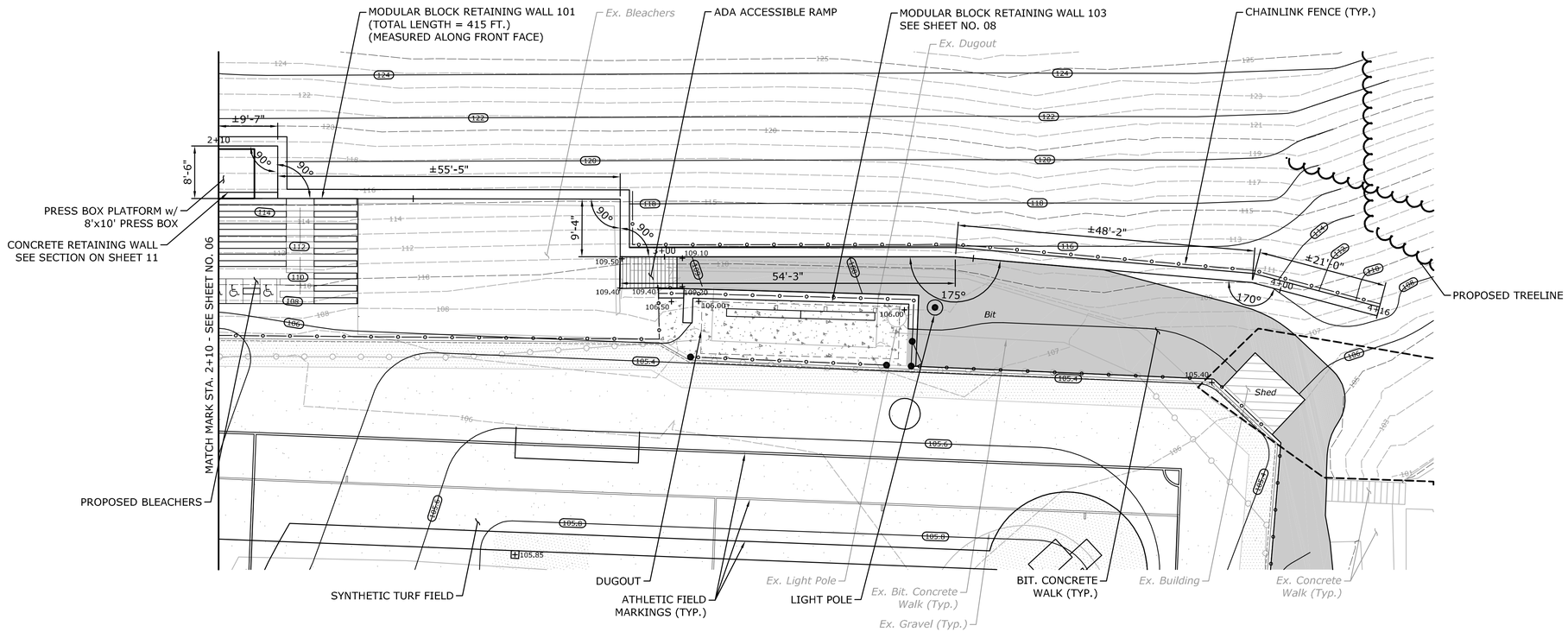

MODULAR BLOCK RETAINING WALL 101 - PLAN

SCALE: 1"=10'-0"

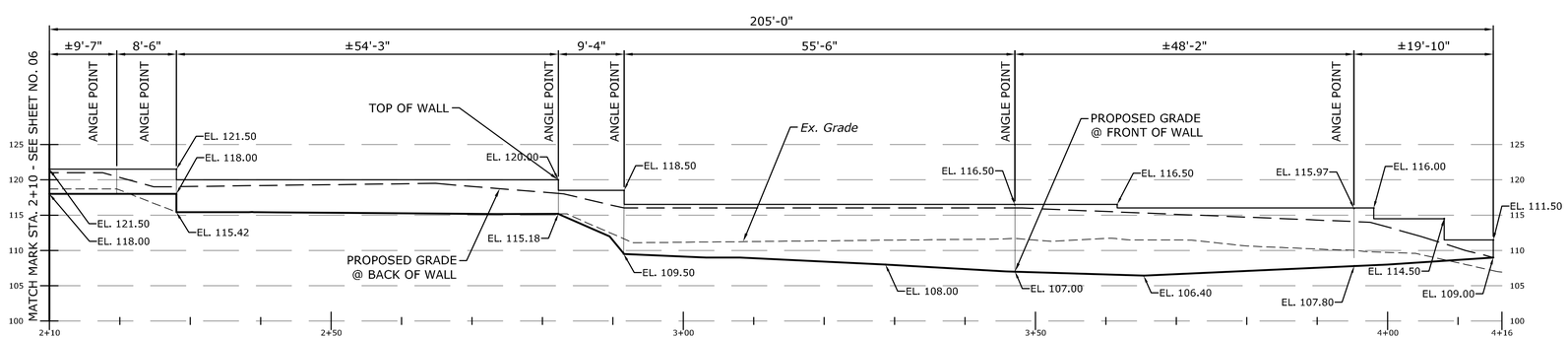

MODULAR BLOCK RETAINING WALL 101 - ELEVATION

SCALE: 1"=10'-0"

MILONE & MACBROOM®
99 Realty Drive
Cheshire, Connecticut 06410
(203) 271-1773 Fax (203) 272-9733
www.milloneandmacbroom.com

DESCRIPTION	DATE	BY

STRUCTURAL PLANS

HAMDEN HIGH SCHOOL
BASEBALL / MULTIPURPOSE FIELD IMPROVEMENTS
2040 DIXWELL AVENUE
HAMDEN, CONNECTICUT

KP	NP	KP
DESIGNED	DRAWN	CHECKED

SCALE: 1"=10'

DATE: MAY 11, 2016

PROJECT NO.: 1228-61

DRAWING NO.:

SHEET NO.: 07

Copyright Milone & MacBroom, Inc - 2016

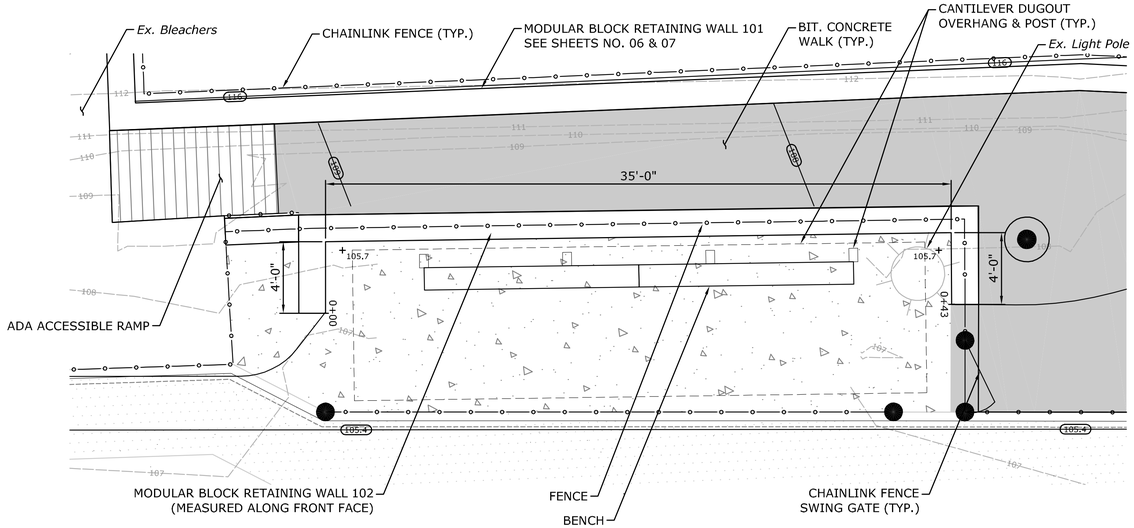

MODULAR BLOCK RETAINING WALL 102 - PLAN

SCALE: ¼"=1'-0"

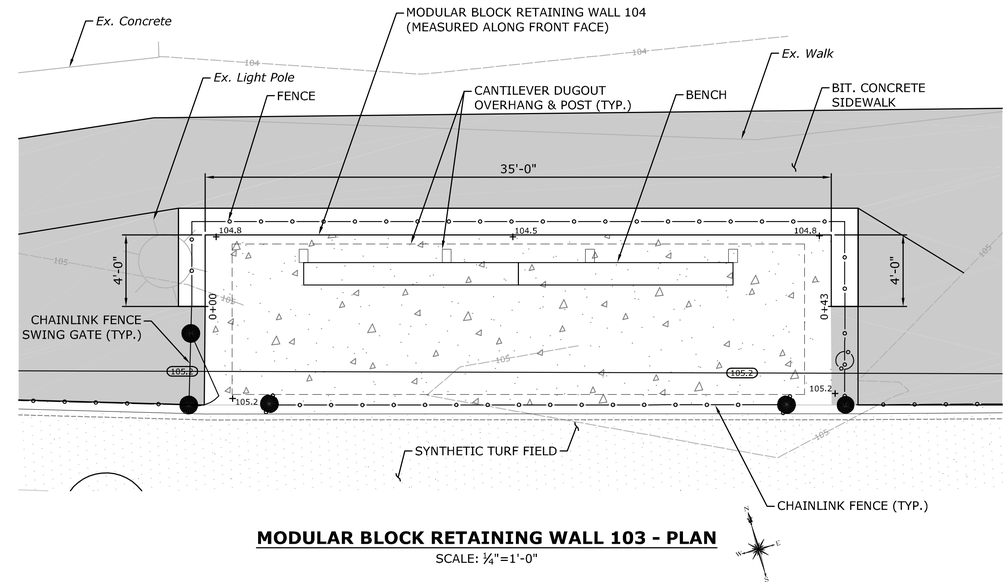

MODULAR BLOCK RETAINING WALL 103 - PLAN

SCALE: ¼"=1'-0"

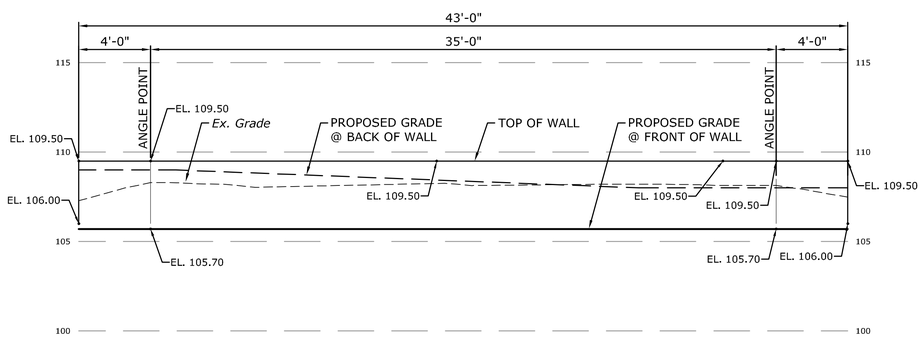

MODULAR BLOCK RETAINING WALL 102 - ELEVATION

SCALE: ¼"=1'-0"

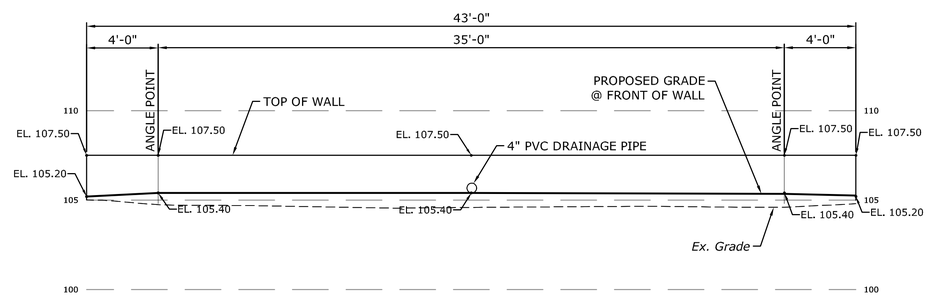

MODULAR BLOCK RETAINING WALL 103 - ELEVATION

SCALE: ¼"=1'-0"

MILONE & MACBROOM®
99 Realty Drive
Cheshire, Connecticut 06410
(203) 271-1773 Fax (203) 272-9733
www.milloneandmacbroom.com

DESCRIPTION	DATE	BY

STRUCTURAL PLANS

HAMDEN HIGH SCHOOL
BASEBALL / MULTIPURPOSE FIELD IMPROVEMENTS
2040 DIXWELL AVENUE
HAMDEN, CONNECTICUT

KP	NP	KP
DESIGNED	DRAWN	CHECKED

SCALE: AS NOTED

DATE: MAY 11, 2016

PROJECT NO.: 1228-61

DRAWING NO.:

SHEET NO.: 08

Copyright Milone & MacBroom, Inc - 2016

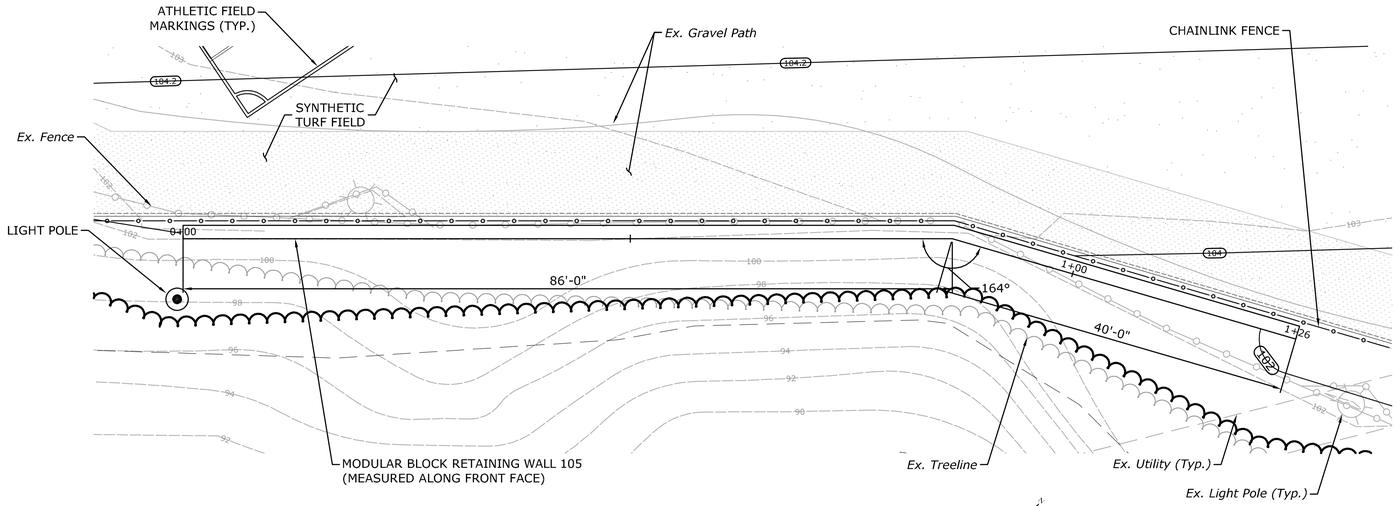

MODULAR BLOCK RETAINING WALL 104 - PLAN

SCALE: ⅛"=1'-0"

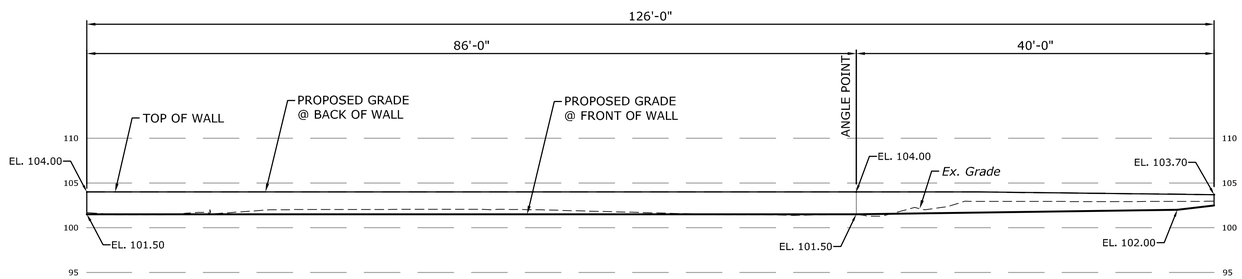

MODULAR BLOCK RETAINING WALL 104 - ELEVATION

SCALE: ⅛"=1'-0"

MILONE & MACBROOM®
99 Realty Drive
Cheshire, Connecticut 06410
(203) 271-1773 Fax (203) 272-9733
www.milloneandmacbroom.com

DESCRIPTION	DATE	BY

STRUCTURAL PLANS

HAMDEN HIGH SCHOOL
BASEBALL / MULTIPURPOSE FIELD IMPROVEMENTS

2040 DIXWELL AVENUE
HAMDEN, CONNECTICUT

KP	NP	KP
DESIGNED	DRAWN	CHECKED

SCALE: **AS NOTED**

DATE: **MAY 11, 2016**

PROJECT NO.: **1228-61**

DRAWING NO.:

SHEET NO.: **09**

Copyright Milone & MacBroom, Inc - 2016

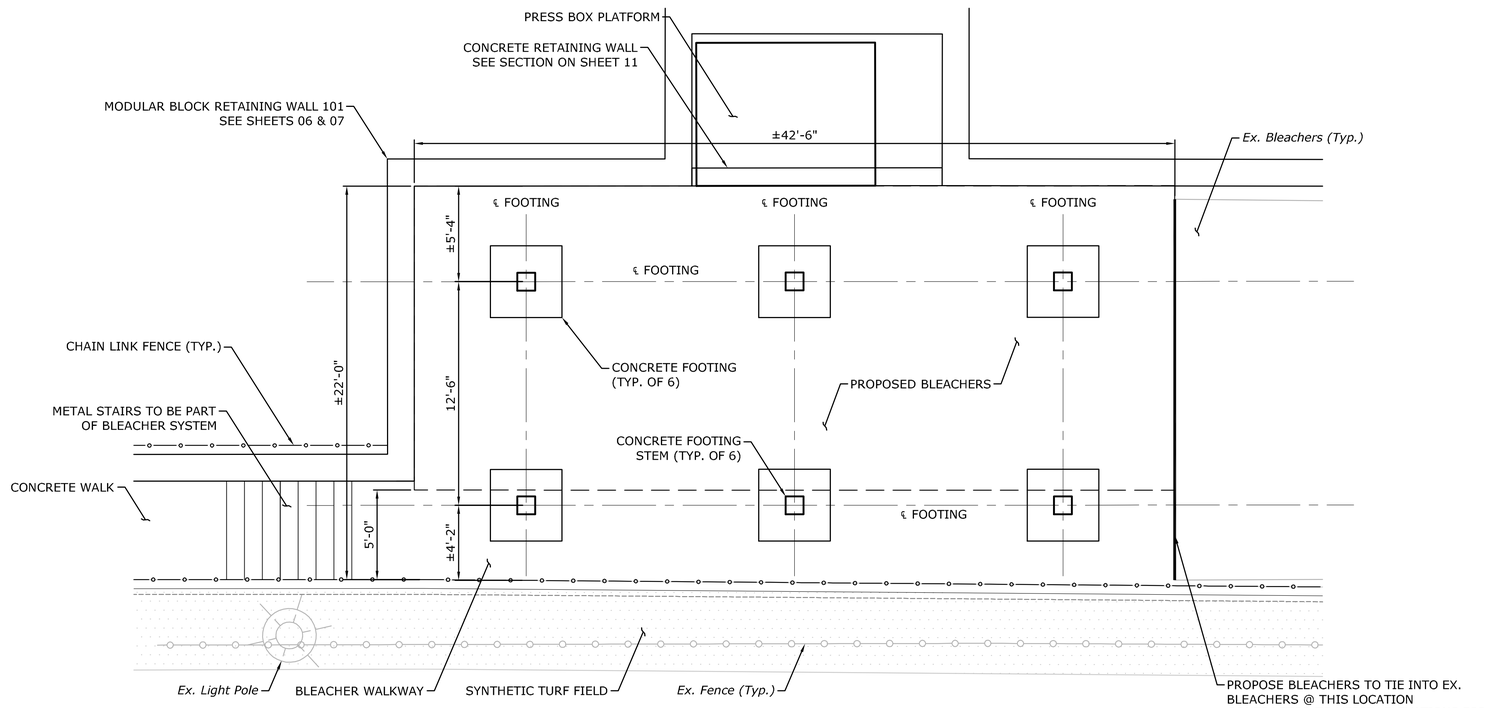

PROPOSE BLEACHERS TO TIE INTO EX. BLEACHERS @ THIS LOCATION CONTRACTOR TO VERIFY ELEVATIONS FOR TIE-IN AND REMOVE EXISTING CHAIN LINK FENCE BETWEEN BLEACHERS AND CREATE A FLUSH CONNECTION BETWEEN BLEACHER SEATS

BLEACHER SYSTEM FOUNDATION PLAN

SCALE ¼"=1'-0"

GENERAL NOTES

ALL DIMENSIONS & ELEVATIONS TO BE FIELD VERIFIED PRIOR TO CONSTRUCTION.

CONTRACTOR SHALL TAKE ALL PRECAUTIONS NECESSARY TO AVOID DAMAGE TO EXISTING BLEACHERS & FOOTINGS.

MANUFACTURER TO PROVIDE SHOP DRAWINGS FOR BLEACHER SYSTEM PRIOR TO CONSTRUCTION FOR APPROVAL.

CONCRETE NOTES

REMAIN-IN-PLACE FORMS: THE USE OF REMAIN-IN-PLACE FORMS ON THIS STRUCTURE IS NOT ALLOWED.

CLASS "A" CONCRETE: CLASS "A" CONCRETE SHALL BE USED FOR FOOTINGS.

EXPOSED EDGES: EXPOSED EDGES OF CONCRETE SHALL BE BEVELED 1"x1" UNLESS DIMENSIONED OTHERWISE. SMOOTH-RUBBED FINISH.

CONCRETE COVER: ALL FOOTING REINFORCEMENT SHALL HAVE THREE INCHES OF COVER. ALL OTHER REINFORCEMENT SHALL HAVE TWO INCHES COVER UNLESS DIMENSIONED OTHERWISE.

REINFORCEMENT: ALL REINFORCEMENT SHALL BE EPOXY COATED, ASTM A615 GRADE 60.

PREFORMED EXPANSION JOINT FILLER: THE COST OF FURNISHING AND INSTALLING PREFORMED EXPANSION JOINT FILLER SHALL BE INCLUDED IN THE COST.

CONSTRUCTION JOINTS: CONSTRUCTION JOINTS OTHER THAN SHOWN ON THE PLANS, WILL NOT BE PERMITTED WITHOUT APPROVAL BY THE ENGINEER.

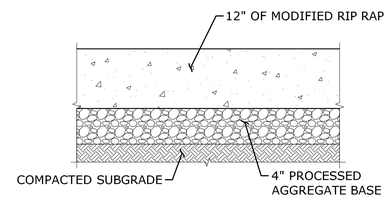

SURFACE BENEATH BLEACHER

NOT TO SCALE

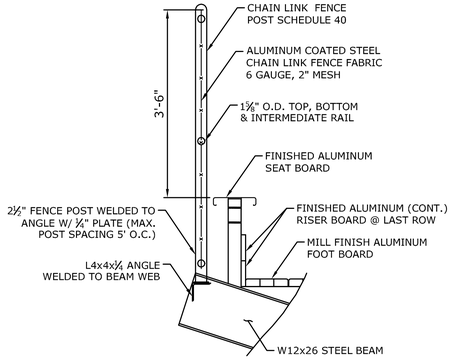

ENLARGED DETAIL 'A'

SCALE: ¾"=1'-0"

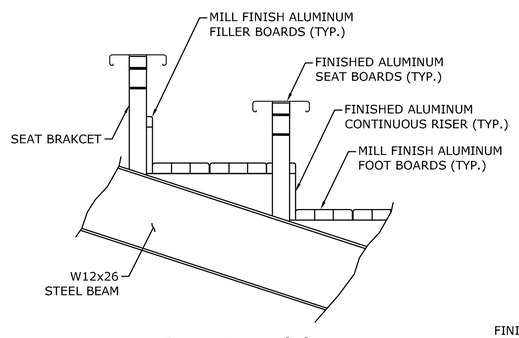

ENLARGED DETAIL 'B'

SCALE: 1"=1'-0"

ROWS: 9	ELEVATION: 36"
RISE 12	RUN 24
DECK SYSTEM - CLOSED	
DECK FINISH - MILL	
BENCH SEATING CAPACITY	170
CHAIR SEATING CAPACITY	0
WHEELCHAIR SEATING CAPACITY	4
COMPANION SEATING CAPACITY	4
TOTAL SEATING CAPACITY	178

NOTE

MANUFACTURER TO PROVIDE SHOP DRAWINGS TO ENGINEER FOR APPROVAL

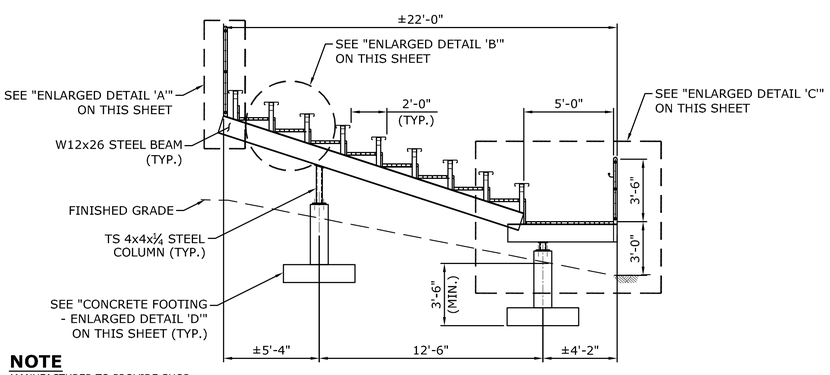

NOTE

MANUFACTURER TO PROVIDE SHOP DRAWINGS TO ENGINEER FOR APPROVAL

TYPICAL BLEACHERS SECTION

SCALE: ¼"=1'-0"

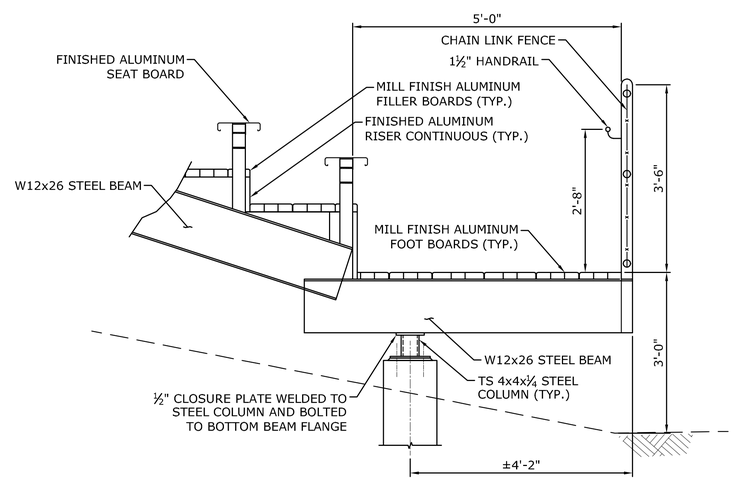

ENLARGED DETAIL 'C'

SCALE: ¾"=1'-0"

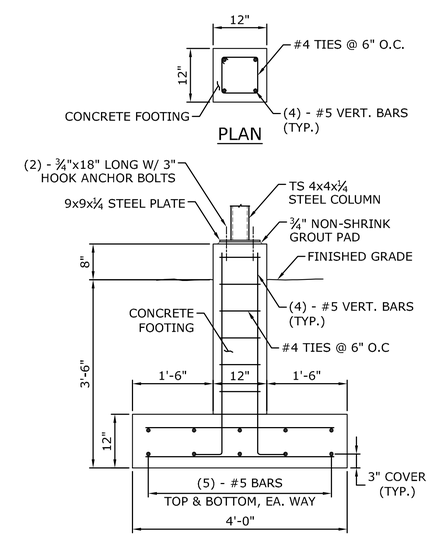

CONCRETE FOOTING - ENLARGED DETAIL 'A'

SCALE: ¾"=1'-0"

MILONE & MACBROOM®
99 Realty Drive
Cheshire, Connecticut 06410
(203) 271-1773 Fax (203) 272-9733
www.milonemacbroom.com

DESCRIPTION	DATE	BY

STRUCTURAL PLANS

HAMDEN HIGH SCHOOL
BASEBALL / MULTIPURPOSE FIELD IMPROVEMENTS
2040 DIXWELL AVENUE
HAMDEN, CONNECTICUT

KP	NP	KP
DESIGNED	DRAWN	CHECKED

SCALE: AS NOTED

DATE: MAY 11, 2016

PROJECT NO.: 1228-61

SHEET NO.: 10

SHEET NAME

Copyright Milone & MacBroom, Inc - 2016

MODULAR BLOCK RETAINING WALL NOTES

1. IT IS THE CONTRACTOR'S RESPONSIBILITY TO ENSURE EXTERNAL STABILITY OF THE WALL, INCLUDING BEARING CAPACITY AND SLOPE STABILITY, IS PROPERLY REVIEWED AND EVALUATED BY A LICENSED PROFESSIONAL ENGINEER. THE WALL DESIGN SHOWN IN THESE DETAILS DOES NOT ADDRESS THE SUFFICIENCY OF BEARING CAPACITY NOR THE SLOPE STABILITY OF THE WALL SYSTEM AND SURROUNDING SOIL.

   THE FOLLOWING IS A LIST OF ACCEPTABLE EMBANKMENT RETAINING WALLS OR APPROVED EQUAL.

A) REDI-ROCK Walls of New England
   Carroll Concrete Co.
   8 Reeds Mill Road
   P.O. BOX 1000
   Newport, NH 03773-1000
   (617) 620-1667

B) MESA Retaining Wall System
   TENSAR Earth Technology, Inc.
   18 Main Street
   Suite 3C
   Concord, MA 01742
   (978) 371-2888

C) United Concrete Products, Inc.
   173 Church Street
   Yalesvilled, CT 06492
   (203) 269-3119

D) LHV Precast Incorporated
   540 Ulster Landing Road
   Kingston, NY 12401
   (845) 336-8880

2. LEVELING PAD SHALL CONSIST OF WELL GRADED ROAD BASE AGGREGATE, ¾" CRUSHED, ANGULAR GRAVEL WITH SOME FINES. CONTRACTOR MAY OPT FOR A LEAN CONCRETE LEVELING PAD. PAD SHALL BE UNREINFORCED LEAN CONCRETE, 200-300 PSI, 3" THICK MAXIMUM. DRAINAGE AGGREGATE SHALL CONSIST OF CLEAN ANGULAR GRAVEL, ¾" DIAMETER WITH LESS THAN 5% FINES.

3. DRAINAGE PIPE SHALL BE PERFORATED OR SLOTTED PVC OR CORRUGATED HDPE PIPE. REINFORCED BACKFILL SHALL BE FREE OF DEBRIS, ORGANIC SOIL, AND EXPANSIVE SOILS. FOR UNITS TO BE EMBEDDED, COMPACT FILL IN FRONT OF UNITS AT THE SAME TIME FILL BEHIND UNITS IS COMPACTED.

4. COMPACTION SHALL BE 95% OF MAXIMUM STANDARD PROCTOR DENSITY (ASTM D-698). COMPACTION TESTS SHALL BE TAKEN AS THE WALL IS INSTALLED. THE MINIMUM NUMBER OF TESTS SHALL BE DETERMINED BY THE CONTRACTOR'S DESIGN ENGINEER.

5. COMPACTION WITHIN 3 FT OF WALL SHALL BE LIMITED TO HAND OPERATED EQUIPMENT. CONTRACTOR SHALL SLOPE SITE GRADES TO DIRECT SURFACE RUNOFF AWAY FROM WALL AT END OF EACH DAY TO AVOID WATER DAMAGING THE WALL WHILE UNDER CONSTRUCTION. ANY SURFACE DRAINAGE FEATURES, FINISHED GRADING, PAVEMENT, OR TURF SHALL BE INSTALLED IMMEDIATELY AFTER WALL IS COMPLETED.

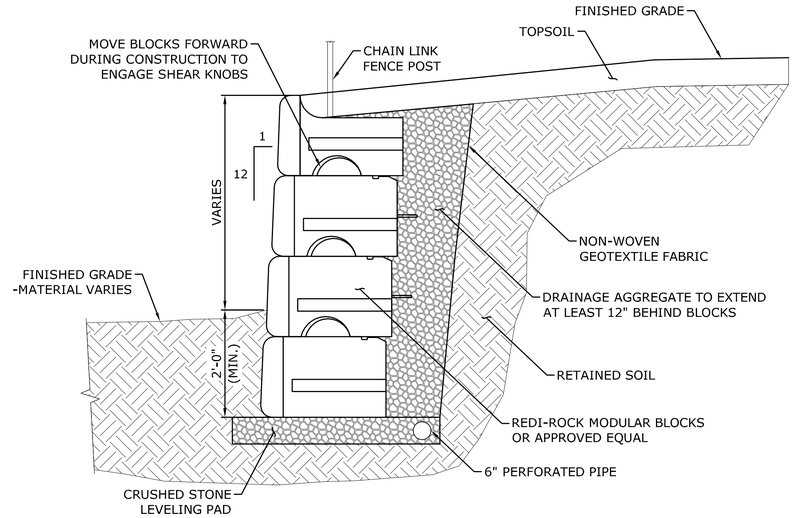

MODULAR BLOCK UN-REINFORCED WALL

SCALE: ¾"=1'-0"

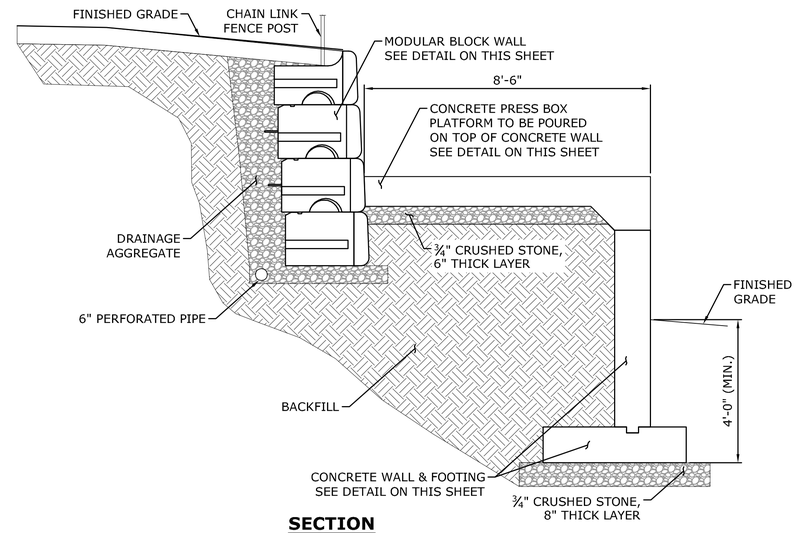

SECTION

SCALE: ½"=1'-0"

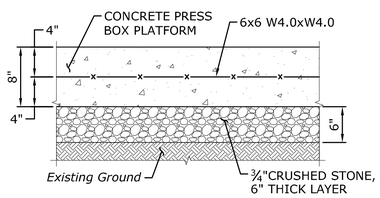

PRESS BOX PLATFORM - SECTION

SCALE: 1"=1'-0"

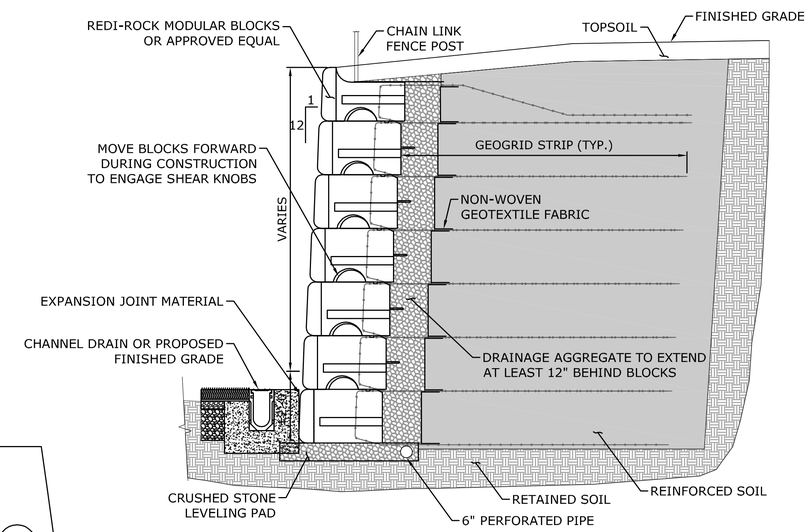

MODULAR BLOCK REINFORCED WALL

SCALE: ½"=1'-0"

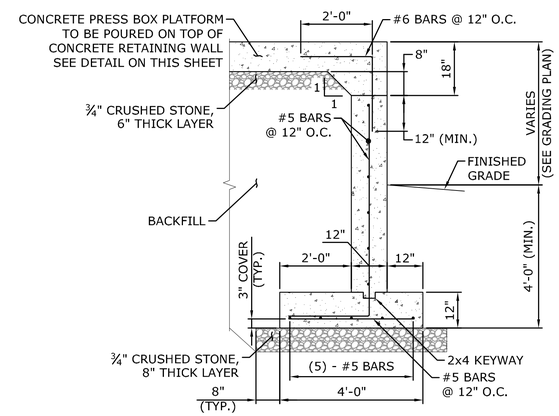

CONCRETE RETAINING WALL

SCALE: ½"=1'-0"

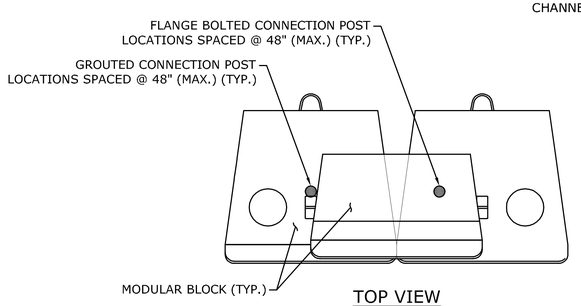

TOP VIEW

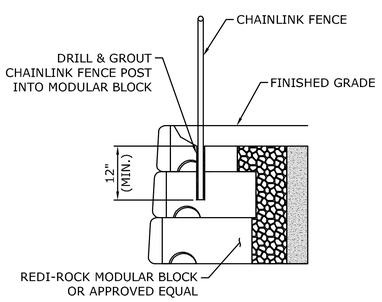

GROUTED CONNECTION

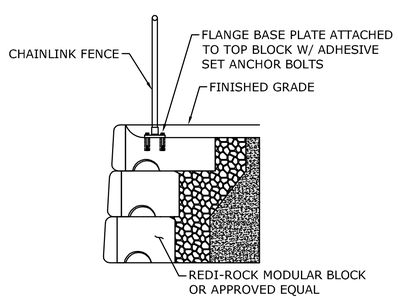

FLANGE BOLTED CONNECTION

CHAINLINK FENCE @ MODULAR BLOCK WALL

N.T.S."

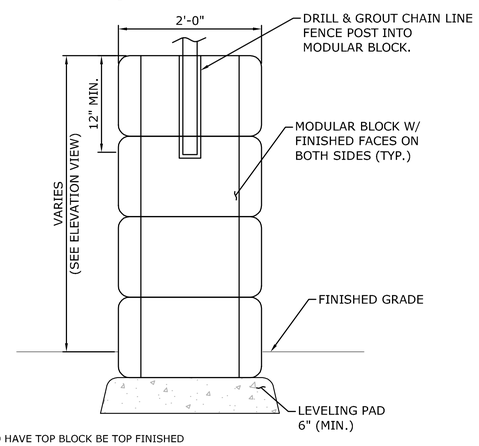

NOTE:
-DUGOUTS TO HAVE TOP BLOCK BE TOP FINISHED

MODULAR BLOCK FREE STANDING WALL

SCALE: 1"=1'-0"

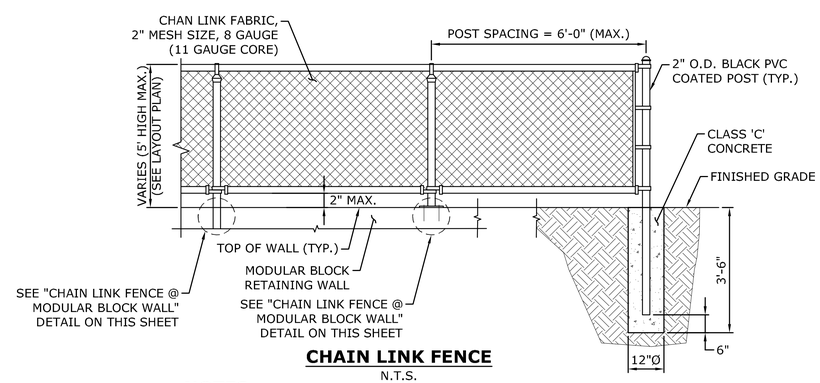

CHAIN LINK FENCE

N.T.S.

NOTES

1. THE CONTRACTOR SHALL SUBMIT FENCE SHOP DRAWING (INCLUDING FENCE LAYOUT) FOR APPROVAL.
2. ALL FENCE HARDWARE SHALL BE BLACK PVC COATED.

MILONE & MACBROOM®
99 Realty Drive
Cheshire, Connecticut 06410
(203) 271-1773 Fax (203) 272-9733
www.milonemacbroom.com

DESCRIPTION	DATE	BY

STRUCTURAL PLANS

HAMDEN HIGH SCHOOL
BASEBALL / MULTIPURPOSE FIELD IMPROVEMENTS
2040 DIXWELL AVENUE
HAMDEN, CONNECTICUT

KP	NP	KP
DESIGNED	DRAWN	CHECKED

SCALE: AS NOTED

DATE: MAY 11, 2016

PROJECT NO.: 1228-61

SHEET NO.: 11

SHEET NAME

Copyright Milone & MacBroom, Inc - 2016

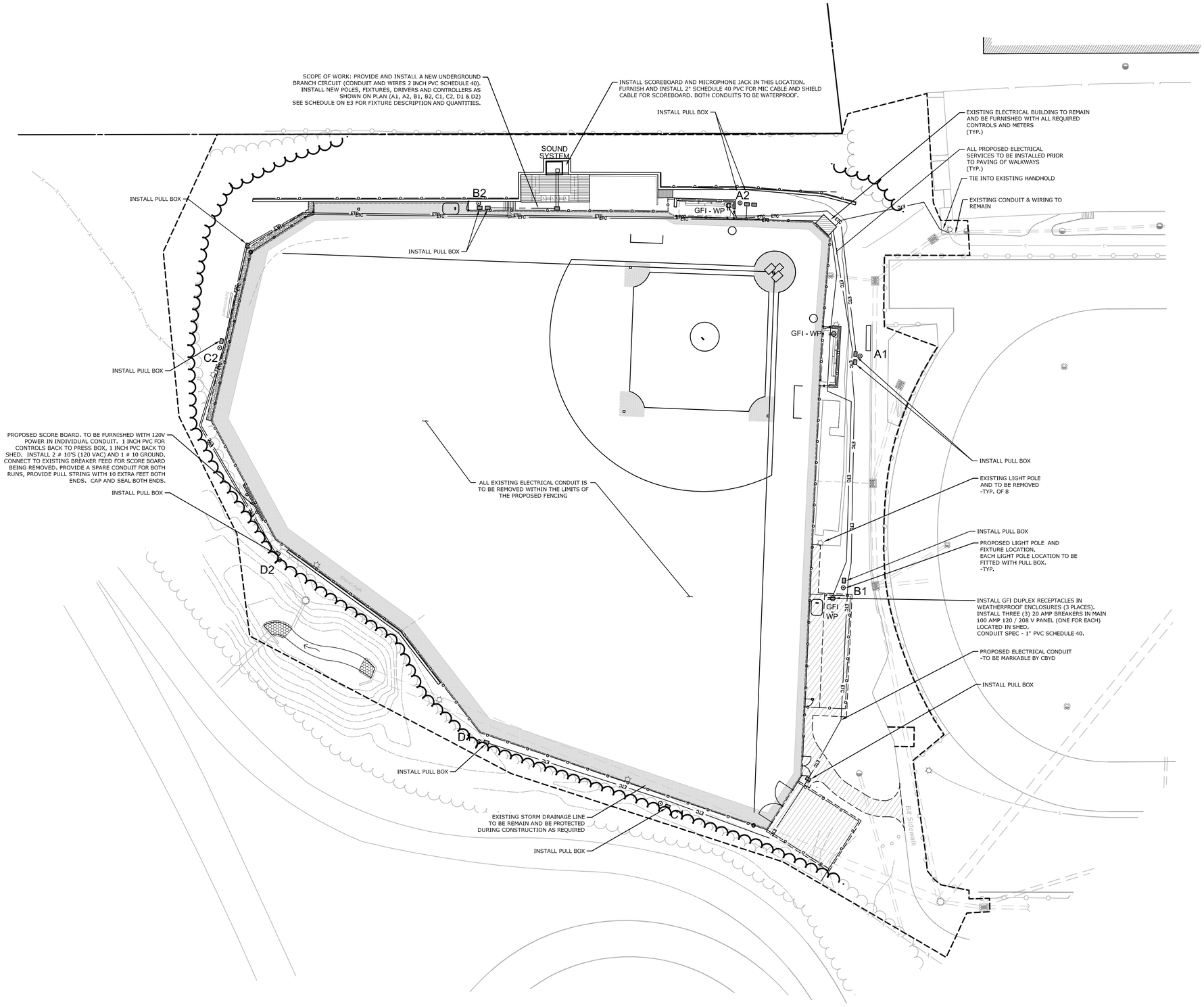

NOTE:
- ALL ELECTRICAL STRUCTURES INCLUDING BUT NOT LIMITED TO LIGHT POLES, HAND HOLES AND PULL BOXES ARE TO BE LOCATED OUTSIDE OF THE PROPOSED FENCELINE/FIELD OF PLAY

SILVER / PETRUCELLI + ASSOCIATES
Architects / Engineers / Interior Designers
3190 Whitney Avenue, Hamden, CT 06518-2340
Tel. 203 230 9007 Fax. 203 230 8247
spl@petrucelli.com

MILONE & MACBROOM®
99 Realty Drive
Cheshire, Connecticut 06410
(203) 271-1773 Fax (203) 272-9733
www.milonemacbroom.com

DESCRIPTION	DATE	BY

SITE ELECTRICAL PLAN

HAMDEN HIGH SCHOOL
BASEBALL / MULTIPURPOSE FIELD IMPROVEMENTS
2040 DIXWELL AVENUE
HAMDEN, CONNECTICUT

PJE	PJE	RRB
DESIGNED	DRAWN	CHECKED

SCALE: AS NOTED

DATE: MAY 11, 2016

PROJECT NO.: 1228-61

SHEET NAME: 12

Copyright Milone & MacBroom, Inc - 2015

DESIGNATION	DESCRIPTION	MANUFACTURER/ MODEL NUMBER	LAMP			ELECTRICAL			NOTES
			TYPE	COLOR TEMP	NO	BALLAST	VOLTAGE	WATTS	
A1, A2	BASEBALL FIELD LIGHTING STANDARD & POLE	REFER TO PERFORMANCE SPEC REQUIREMENTS (6)	1500 WATT MH	3000K	5	HPF	480	1500W EACH	(1)
B1, D1	BASEBALL FIELD LIGHTING STANDARD & POLE	REFER TO PERFORMANCE SPEC REQUIREMENTS (6)	1500 WATT MH	3000K	8	HPF	480	1500W EACH	(1)
B2	BASEBALL FIELD LIGHTING STANDARD & POLE	REFER TO PERFORMANCE SPEC REQUIREMENTS (6)	1500 WATT MH	3000K	10	HPF	480	1500W EACH	(1)
C1	BASEBALL FIELD LIGHTING STANDARD & POLE	REFER TO PERFORMANCE SPEC REQUIREMENTS (6)	1500 WATT MH	3000K	5	HPF	480	1500W EACH	(1)
C2, D2	BASEBALL FIELD LIGHTING STANDARD & POLE	REFER TO PERFORMANCE SPEC REQUIREMENTS (6)	1500 WATT MH	3000K	4	HPF	480	1500W EACH	(1)
D1	BASEBALL FIELD LIGHTING STANDARD & POLE	REFER TO PERFORMANCE SPEC REQUIREMENTS (6)	1500 WATT MH	3000K	7	HPF	480	1500W EACH	(1)
POLES A1,A2,C1, C2,D1,D2	ATHLETIC FIELD LIGHTING POLE, 70' TALL	POLE TYPE – LSS100C, PRECAST BASE. OUTSIDE BASE DIAMETER 23.75" BASE WEIGHT 10,600 LBS; BASE LENGTH 27' 10"; PROJECTION AFG 7' 10"							
POLES B1,B2	ATHLETIC FIELD LIGHTING POLE, 80' TALL	POLE TYPE – LSS100C, PRECAST BASE. OUTSIDE BASE DIAMETER 23.75" BASE WEIGHT 10,600 LBS; BASE LENGTH 27' 10"; PROJECTION AFG 7' 10"							

NOTES:

(1) SPORTS FIELD LIGHTING EQUIPMENT SHALL BE PROVIDED IN ACCORDANCE WITH PERFORMANCE SPECIFICATIONS DEFINED IN PROJECT MANUAL. CONTRACTOR SHALL BE RESPONSIBLE FOR COORDINATION OF EXACT BRANCH CIRCUIT, CONTROL, ENCLOSURE AND FOUNDATION REQUIREMENTS BASED ON EQUIPMENT FURNISHED. BASE OF DESIGN FOR THIS PROJECT IS MUSCO LIGHTING. MANUFACTURERS THAT WISH TO BID AS AN ALTERNATE MUST PROVIDE LIGHTING CALCULATIONS, ENERGY SUMMARY WARRANTY THAT SHOWS THEIR DESIGN IS EQUAL TO OR GREATER THAN THE BASIS OF DESIGN. DESIGNS THAT ARE SOLELY DEEMED BY THE SR. LIGHTING DESIGNER TO BE LESS THAN EQUAL TO THE BASIS OF DESIGN WILL NOT BE EXCEPTED OR APPROVED FOR PURCHASE, THERE WILL BE NO EXCEPTIONS.

2. FURNISH ALL LIGHT FIXTURES WITH REQUIRED LAMPS.
3. FURNISH ALL ADDITIONAL MATERIALS AND ACCESSORIES REQUIRED FOR COMPLETE INSTALLATION TO BE FULLY OPERATIONAL.
4. PROVIDE ALL ASSEMBLY REQUIRED.
5. ALL EXTERIOR FIXTURES IN UNHEATED SPACES SHALL BE CAPABLE OF OPERATING IN COLD TEMP (0° F).

(6) PERFORMANCE SPECIFICATIONS – BASEBALL (48 FIXTURES / 72,000 WATTS:
MEASURED 3' AFG: 50 FOOT CANDLES INFIELD; 30 FOOT CANDLES OUTFIELD.
GUARANTEED MAX / MIN: 2.00/1.00 INFIELD, 2.50/1.00 OUTFIELD.
NUMBER OF PINT BY POINTS: 25 INFIELD, 94 OUTFIELD.

PERFORMANCE SPECIFICATIONS – SOCCER (39 FIXTURES / 58,500 WATTS):
MEASURED 3' AFG: 30 FOOT CANDLES.
GUARANTEED MAX / MIN: 2.00/1.00.
NUMBER OF PINT BY POINTS: 70.

GENERAL DEMOLITION NOTES

1. ELECTRICAL DEMOLITION TO BE SUPERVISED BY LICENSED ELECTRICAL CONTRACTOR. EACH CIRCUIT SHALL BE VERIFIED "COLD" & DISCONNECTED FROM ELECTRICAL SERVICE PRIOR TO COMMENCING REMOVAL.
2. REMOVE EXISTING ELECTRICAL EQUIPMENT & MATERIALS AS REQUIRED TO ACCOMMODATE WORK AS SPECIFICALLY NOTED ON THE DRAWINGS.
3. ALL MATERIALS BEING REMOVED SHALL BE HANDLED IN A MANNER COMPLYING WITH ALL PERTINENT LAWS, CODES AND ENVIRONMENTAL REGULATIONS.
4. WHERE ELECTRICAL EQUIPMENT & DEVICES ARE BEING REMOVED, COORDINATE AND FIELD VERIFY IF BRANCH CIRCUIT FEEDS THROUGH TO EQUIPMENT/DEVICES TO REMAIN. BRANCH CIRCUITS SHALL BE SPLICED OR RELOCATED TO MAINTAIN CONTINUATION OF SERVICES.
5. WHERE EXISTING DEVICES ARE REMOVED & NO NEW DEVICES ARE INSTALLED IN THE SAME LOCATION, REMOVE ALL WIRING FROM BOX & PROVIDE PROPERLY SIZED BLANK COVER PLATE.
6. ALL REMOVED COMPONENTS SHALL BE LEGALLY DISPOSED OF BY CONTRACTOR UNLESS SPECIFICALLY NOTED OTHERWISE.

GENERAL ELECTRICAL NOTES

1. SPECIFICATION SECTIONS, GENERAL CONDITIONS, SUPPLEMENTAL GENERAL CONDITIONS AND DRAWINGS ARE INTEGRAL PARTS OF CONTRACT DOCUMENTS.
2. SYSTEM COMPONENTS ARE LOCATED APPROXIMATELY ON DRAWINGS. BASE ACTUAL LOCATIONS ON FIELD VERIFICATION OF EXISTING BUILDING CHARACTERISTICS INCLUDING BUT NOT LIMITED TO STRUCTURAL, & ELECTRICAL COMPONENTS.
3. ALL WORK AND ACTION DEPICTED AND DESCRIBED IN CONTRACT DOCUMENTS SHALL BE PERFORMED BY THE CONTRACTOR UNLESS SPECIFICALLY NOTED OTHERWISE.
4. REFERENCE TO SPECIFIC SUB–CONTRACTORS SUCH AS "ELECTRICAL", ETC. ARE INTENDED TO SUGGEST POSSIBLE DIVISION OF RESPONSIBILITY. PRIME CONTRACTOR SHALL BE RESPONSIBLE FOR COORDINATION AND EXECUTION OF ALL WORK.
5. OBTAIN AND PAY FOR ALL REQUIRED PERMITS AND INSPECTIONS.
6. ALL EQUIPMENT, MATERIALS AND RELATED SYSTEM COMPONENTS SHALL BE NEW UNLESS NOTED OTHERWISE.
7. REPAIR AND REPLACE AT NO COST TO OWNER ALL EQUIPMENT AND MATERIALS DAMAGED DURING CONSTRUCTION.
8. CIRCUITING DEPICTED LIGHTING FIXTURES DEFINES GROUPING OF FIXTURES, DEVICES AND COMPONENTS AND REQUIRED CONDUCTORS. CIRCUITING IS NOT INTENDED TO DEFINE CONDUIT LOCATIONS.
9. STUDY THE PROJECT MANUAL & DRAWINGS OF OTHER DISCIPLINES INCLUDING ARCHITECTURAL, STRUCTURAL, CIVIL & MECHANICAL.
12. ALL PENETRATIONS THRU RATED WALLS SHALL BE SEALED USING U.L. LISTED METHODS APPROPRIATE FOR INDICATED RATING.
13. INSTALLATIONS ON EXISTING MASONRY WALLS SHALL BE RUN WITH SURFACE RACEWAY PAINTED TO MATCH WALL FINISH AND SURFACE BOXES.

SOUND SYSTEM COMPONENTS

SCALE: NONE

NOTES:

EC TO PROVIDE, INSTALL AND COMMISSION THE FOLLOWING EQUIPMENT IN THE NEW ANNOUNCER / PRESS BOX.

1. ATLAS SOUND CAT. NO. WMA24–23 SECTIONAL, WALL MOUNTING TYPE WITH A TEXTURED BLACK FINISH PROVIDING A MINIMUM OF FORTY–TWO (42) INCHES OF VERTICAL RACK MOUNTING SPACE. THE RACK SHALL BE COMPLETE WITH A CONTINUOUS PIANO HINGED FRONT DOOR WITH A CYLINDER LOCK AND HANDLE.
2. TWO (2) CROWN MODEL NO. CTS 600 DUAL CHANNEL POWER AMPLIFIER SUITABLE FOR RACK MOUNTING WITH A MINIMUM RATING OF 300 WATTS CONTINUOUS SINE WAVE PER CHANNEL INTO A EIGHT (8) OHM OUTPUT AT TWENTY (20) HZ TO TWENTY (20) KHZ WITH A MAXIMUM 0.1 PERCENT (0.1%) DISTORTION.
3. ONE (1) PASO MODEL NO. DMS260P TEN (10) CHANNEL, DIGITAL MIXER/PREAMPLIFIER WITH 27/3501 RACK MOUNT KIT.
4. TWO (2) PASO MODEL NO. PM01ML MIC/LINE INPUT MODULE OR EQUAL, FURNISH ALL ADDITIONAL MATERIALS AND ACCESSORIES REQUIRED FOR COMPLETE INSTALLATION TO BE FULLY OPERATIONAL.
5. ONE (1)SHURE MODEL NO. SM58S DYNAMIC CARDIOID MICROPHONE COMPLETE WITH AN ON/OFF SWITCH COMPLETE WITH A TWENTY FIVE (25) FOOT CONNECTOR CORD WITH CANNON XLR CONNECTORS. INCLUDE TWO (2) ATLAS SOUND MODEL NO. DS–2 MICROPHONE DESK STAND OR APPROVED EQUAL.
6. TWO (2) ATLAS SOUND MODEL NO. ACRL–191 AC POWER SUPPLY MODULE OR EQUAL SUITABLE FOR RACK MOUNTING.
7. TWO (2) ATLAS SOUND MODEL NO. ACS–1 AC POWER STRIP.
8. FOUR (4), HORN TYPE LOUDSPEAKERS OF THE COMPOUND DIFFRACTION DESIGN RATED 15W TO 120 WATTS, 70.0 VOLTS WITH AFREQUENCY RESPONSE OF 90 HZ – 16 KHZ AND SHALL INCLUDE A DRIVER; COMMUNITY MODEL NO. R.5–66T OR EQUAL.
9. PROVIDE TWO (2) SURFACE WALL MOUNTED MICROPHONE OUTLETS (TYPE 'A') CONSISTING OF CANNON "XLR" COMPLETE WITH 3 PIN XLR (FEMALE) SERIES AUDIO JACK OF THE TYPE REQUIRED SO AS TO BE COMPATIBLE WITH THE TYPE OF MICROPHONE CABLE CONNECTOR FURNISHED, AND A STAINLESS STEEL COVERPLATE. A MICROPHONE OUTLET, WHICH MEETS THIS SPECIFICATION SHALL BE AS MANUFACTURED BY CONQUEST AUDIO OR APPROVED EQUAL.
10. PROVIDE TWO (2)SURFACE WALL MOUNTED MICROPHONE OUTLETS (TYPE 'B') CONSISTING OF ONE (1) CANNON "XLR", COMPLETE WITH 3 PIN XLR (FEMALE), SERIES AUDIO JACK OF THE TYPE REQUIRED SO AS TO BE COMPATIBLE WITH THE TYPE OF MICROPHONE CABLE CONNECTOR FURNISHED, ONE (1) 3.5MMSTEREO AUDIO JACK (MP3), AND A STAINLESS STEEL COVERPLATE. A MICROPHONE/MP3 OUTLET, WHICH MEETS THIS SPECIFICATION SHALL BE AS MANUFACTURED BY CONQUEST AUDIO OR APPROVED EQUAL.

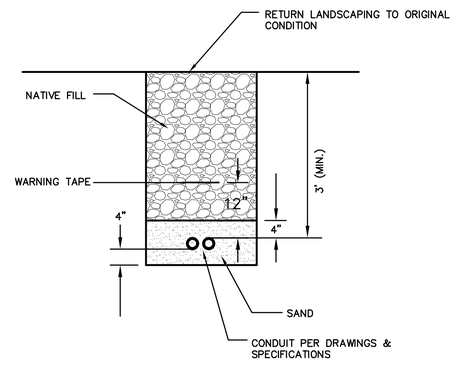

TYPICAL TRENCHING AND BACKFILLING DETAIL

SCALE: NONE

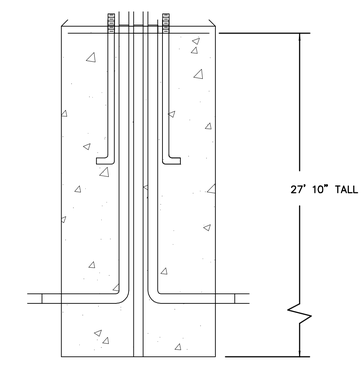

FRONT VIEW

DESIGN NOTES:

1 – CONCRETE 4000 PSI AT 28 DAYS.
2 – BASIS OF DESIGN: MUSCO LIGHTING PRECAST WITH REINFORCING AS SPECIFIED BY OEM.
3 – ANCHOR BOLTS AND GROUNDING AS SPECIFIED BY OEM.
4 – BALLAST POURED AROUND BASE IF REQUIRED.
5 – BOLT PROJECTION AS SPECIFIED BY POLE MANUFACTURER.
6 – 3/4" X 10' UL LISTED COPPER BONDED GROUND ROD.
7 – SEE PLAN FOR CONDUIT SIZES.
8 – EC TO COORDINATE CONDUIT ENTRANCE INTO THE FOUNDATION(S) PER SITE CONDITIONS/REQUIREMENTS.

70' & 80' POLE FOUNDATION DETAIL

SCALE: NONE

HEIGHT	WEIGHT
27' 10" TALL	~10,600 LBS

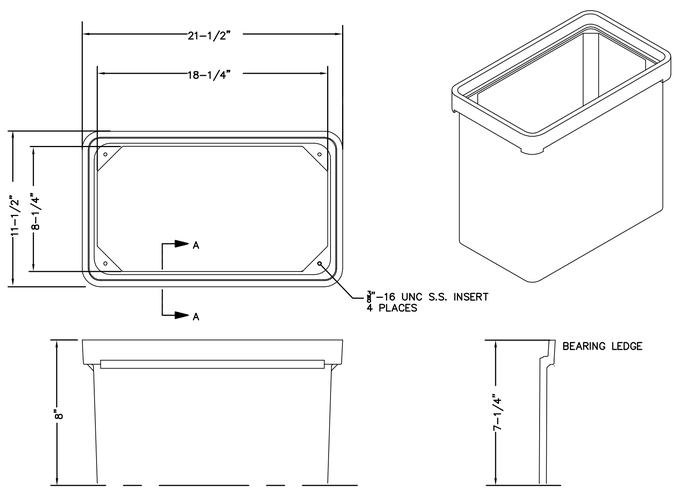

IN–GROUND PULL BOX DETAIL

SCALE: NONE

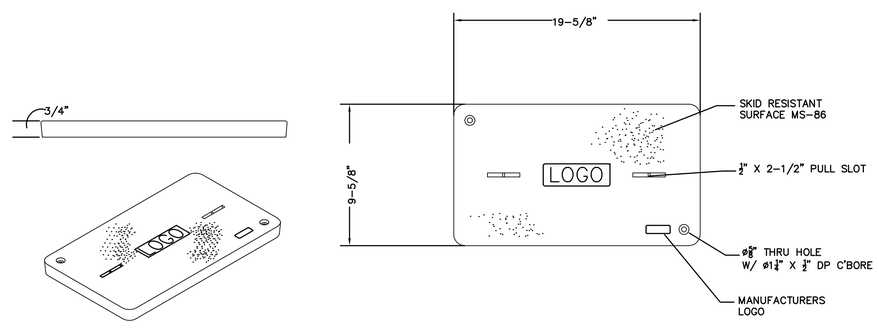

PULL BOX COVER DETAIL

SCALE: NONE

SILVER / PETRUCELLI + ASSOCIATES
Architects / Engineers / Interior Designers
3190 Whitney Avenue, Hamden, CT 06518-2340
Tel. 203 230 9007 Fax. 203 230 8247
sil-petrucelli.com

MILONE & MACBROOM®
99 Realty Drive
Chesshire, Connecticut 06410
(203) 271-1773 Fax (203) 272-9733
www.milonemacbroom.com

DESCRIPTION	DATE	BY

ELECTRICAL NOTES AND SCHEDULE

HAMDEN HIGH SCHOOL
BASEBALL / MULTIPURPOSE FIELD IMPROVEMENTS
2040 DIXWELL AVENUE
HAMDEN, CONNECTICUT

PJE	PJE	RRB
DESIGNED	DRAWN	CHECKED

SCALE: AS NOTED

DATE: MAY 11, 2016

PROJECT NO.: 1228-61

SHEET NAME: 13

Copyright Milone & MacBroom, Inc - 2015

ONE –LINE RISER DIAGRAM

SCALE: NONE
STORAGE SHED

NOTE:
SEE PHYSICAL GEAR LOCATION DETAILS ON THIS SHEET FOR FURTHER INFORMATION

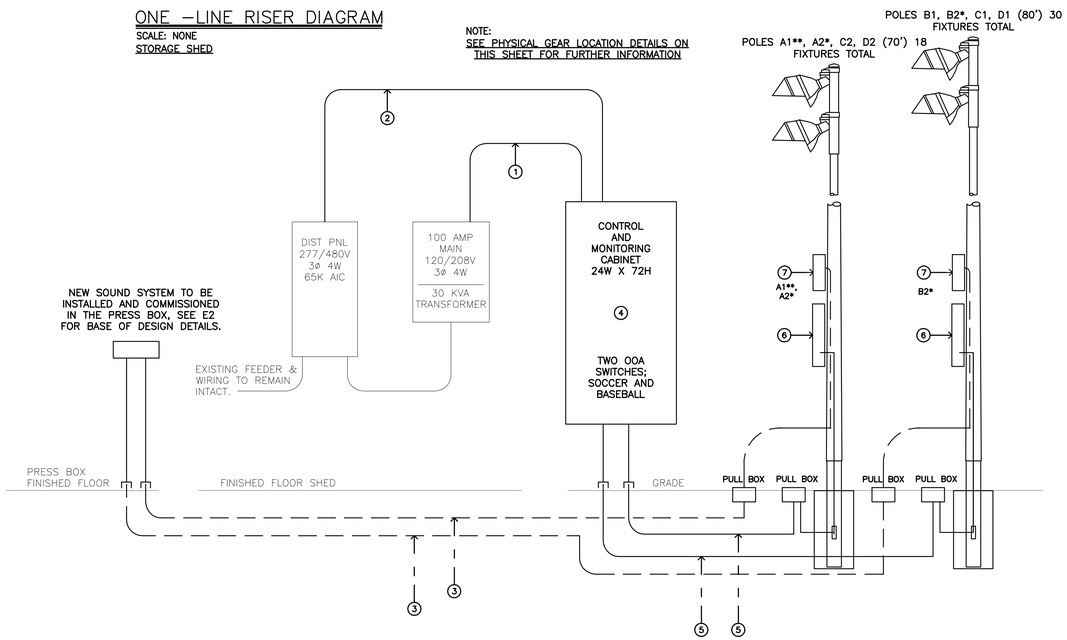

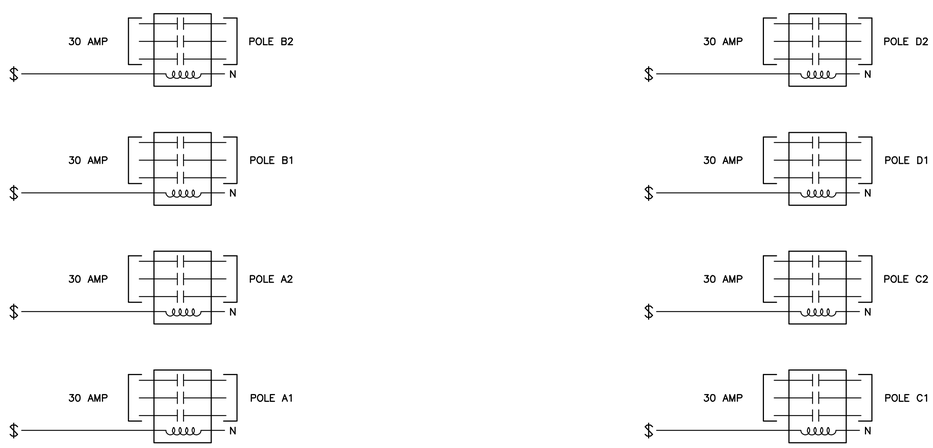

BASEBALL SOCCER FIELD SPORTS LIGHTING CONTROL SCHEMATIC (ALL)

SCALE: NONE

BASEBALL FIELD LIGHTING: A1, A2, B1, B2, C1, C2, D1, D2 (48 FIXTURES)
CONTROLLER SWITCH LABELED: BASEBALL FIELD LIGHTING *.

CIRCUIT TABLE			
CIRCUIT #	POLE	CONTACTOR	WIRE
DIST 30A	B2	20A	3#6 + 1#6 GND
DIST 30A	B1	20A	3#6 + 1#6 GND
DIST 30A	A2	30A	3#6 + 1#6 GND
DIST 30A	A1	30A	3#6 + 1#6 GND

ALL VALUES BASED ON COPPER CONDUCTORS.

FIXTURES PER POLE
POLE A1 – 5; A2 – 5, B1 – 8, B2 – 10

SOCCER FIELD LIGHTING: A2, B1, B2, C1, D1, D2 (39 FIXTURES)
CONTROLLER SWITCH LABELED SOCCER FIELD LIGHTING **.

CIRCUIT TABLE			
CIRCUIT #	POLE	CONTACTOR	WIRE
DIST 30A	D2	20A	3#6 + 1#6 GND
DIST 30A	D1	20A	3#6 + 1#6 GND
DIST 30A	C2	30A	3#6 + 1#6 GND
DIST 30A	C1	30A	3#6 + 1#6 GND

ALL VALUES BASED ON COPPER CONDUCTORS.

FIXTURES PER POLE
POLE C1 – 5, C2 – 4, D1 – 7, D2 – 4

RISER KEY NOTES
BASE BID

(D)(1)(2)(3)(4)(5)(6)(7)

DEMO BASE BID:

(D) REMOVE AND RELOCATE THE HUNTER ICC COMMERCIAL GRADE CONTROLLER TO FAR RIGHT HAND WALL (PERPENDICULAR TO THE WALL ITS PRESENTLY ON. THE SECONDARY WIRING (RED) SHOULD REACH WITHOUT DISCONNECTING AND RECONNECTING. THE PRIMARY WIRING WILL REQUIRE BEING EXTENDED. CARE TO BE USED SINCE THE CONTROLLER HAS BEEN REPLACED BY A NEW SERIES CONTROLLER, I CORE. IT IS THE INSTALLERS RESPONSIBILITY TO ENSURE THAT THE CONTROLLER IS FUNCTIONING PROPERLY AFTER RELOCATION, IF IT IS NON FUNCTIONAL A REPLACEMENT UNIT WILL BE THE INSTALLERS RESPONSIBILITY.

(1) INSTALL A NEW 20 AMP 10K AIC BREAKER TO POWER THE RELAYS & LOGIC BD OF THE NEW LIGHTING CONTROLLER.

(2) INSTALL NEW 2.5 INCH MINIMUM EMT CONDUIT FROM DIST TROUGH TO NEW LIGHTING CONTROL PANEL WITH 24 #6'S + 6 #8 GNDS.

(3) INSTALL NEW 1 INCH PVC SCHEDULE 40 CONDUIT FROM SPEAKERS ON POLES TO PRESS BOX FOR SOUND SYSTEM BACKBONE. FURNISH AND INSTALL SPEAKER CABLE CONSISTING OF ONE (1) TWISTED PAIR, NO. 12 AWG UNSHIELDED WITH A TEMPERATURE RANGE FOR DRY LOCATIONS OF MINUS TWENTY–FIVE (25) DEGREES C TO ONE HUNDRED FIVE (105) DEGREES C AND SEVENTY–FIVE (75) DEGREES C FOR WET LOCATIONS.

(4) INSTALL NEW LIGHTING CONTROL PANEL WITH 10 RELAYS AS SHOWN ON THE DRAWING. SEE LIGHTING CONTROL PANEL SPEC FOR ADDITIONAL INFORMATION.

(5) INSTALL ONE (1) NEW 2.5 INCH SCHEDULE 40 CONDUIT FROM THE NEW LIGHTING CONTROL PANEL TO A1, A2, C2 & D2 POLES AND ONE (1) NEW NEW 2.5 INCH SCHEDULE 40 CONDUIT FROM THE NEW LIGHTING CONTROL PANEL TO B1, B2, C1 & D1 POLES. SEE SHEET E1 FOR ADDITIONAL DETAILS.

(6) PROVIDE A DESIGN THAT EMPLOYS BALLAST BACK BOXES LOCATED AT 10' ABOVE THE FINISHED GRADE. RETROFIT SECURELY MOUNT PER MANUFACTURERS REQUIREMENTS. USE STAINLESS STEEL CLAMPS.

(7) FURNISH AND INSTALL SOUND SYSTEM SPEAKERS @ 30' AFG. ON POLES AS FOLLOWS: TWO (2) ON A1**, ONE (1) ON A2* AND ONE (1) ON B2*. REFERENCE E2 FOR ADDITIONAL DETAILS.

(8) MOVE (IF REQUIRED) THE POWER PANEL OVER TO ACCOMMODATE THE INSTALLATION OF THE LIGHTING CONTROL PANEL.

GEN COORDINATE LIGHTING POLE WITH EXISTING STUB UP LOCATION IN THE FIELD. TERMINATE WIRING IN ELECTRICAL COMPONENTS ENCLOSURE APPROXIMATE 10' ABOVE GRADE.

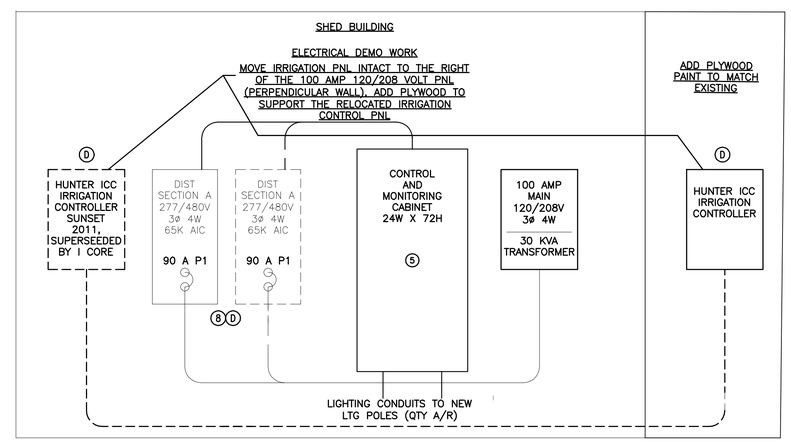

ONE –LINE RISER DIAGRAM – PHYSICAL GEAR LOCATIONS

SCALE: NONE

SILVER / PETRUCELLI + ASSOCIATES
Architects / Engineers / Interior Designers
3190 Whitney Avenue, Hamden, CT 06518-2340
Tel. 203 230 9007 Fax. 203 230 8247
silverpetrucelli.com

MILONE & MACBROOM®
99 Realty Drive
Cheshire, Connecticut 06410
(203) 271-1773 Fax: (203) 272-9733
www.miloneandmacbroom.com

DESCRIPTION	DATE	BY

ELECTRICAL DIAGRAMS AND DETAILS

HAMDEN HIGH SCHOOL
BASEBALL / MULTIPURPOSE FIELD IMPROVEMENTS
2040 DIXWELL AVENUE
HAMDEN, CONNECTICUT

PJE	PJE	RRB
DESIGNED	DRAWN	CHECKED

SCALE: AS NOTED
DATE: MAY 11, 2016
PROJECT NO.: 1228-61

SHEET NAME: 14

Copyright Milone & MacBroom, Inc – 2016

SEDIMENT & EROSION CONTROL SPECIFICATIONS

GENERAL:

THESE GUIDELINES SHALL APPLY TO ALL WORK CONSISTING OF ANY AND ALL TEMPORARY AND/OR PERMANENT MEASURES TO CONTROL WATER POLLUTION AND SOIL EROSION, AS MAY BE REQUIRED, DURING THE CONSTRUCTION OF THE PROJECT.

IN GENERAL, ALL CONSTRUCTION ACTIVITIES SHALL PROCEED IN SUCH A MANNER SO AS NOT TO POLLUTE ANY WETLANDS, WATERCOURSE, WATERBODY, AND CONDUIT CARRYING WATER, ETC. THE CONTRACTOR SHALL LIMIT, INSOFAR AS POSSIBLE, THE SURFACE AREA OF EARTH MATERIALS EXPOSED BY CONSTRUCTION METHODS AND IMMEDIATELY PROVIDE PERMANENT AND TEMPORARY POLLUTION CONTROL MEASURES TO PREVENT CONTAMINATION OF ADJACENT WETLANDS, WATERCOURSES, AND WATER BODIES, AND TO PREVENT, INSOFAR AS POSSIBLE, EROSION ON THE SITE.

LAND GRADING

GENERAL:

1. THE RESHAPING OF THE GROUND SURFACE BY EXCAVATION AND FILLING OR A COMBINATION OF BOTH, TO OBTAIN PLANNED GRADES, SHALL PROCEED IN ACCORDANCE WITH THE FOLLOWING CRITERIA:

   a. THE CUT FACE OF EARTH EXCAVATION SHALL NOT BE STEEPER THAN TWO HORIZONTAL TO ONE VERTICAL (2:1).

   b. THE PERMANENT EXPOSED FACES OF FILLS SHALL NOT BE STEEPER THAN TWO HORIZONTAL TO ONE VERTICAL (2:1).

   c. THE CUT FACE OF ROCK EXCAVATION SHALL NOT BE STEEPER THAN ONE HORIZONTAL TO FOUR VERTICAL (1:4).

   d. PROVISION SHOULD BE MADE TO CONDUCT SURFACE WATER SAFELY TO STORM DRAINS TO PREVENT SURFACE RUNOFF FROM DAMAGING CUT FACES AND FILL SLOPES

   e. EXCAVATIONS SHOULD NOT BE MADE SO CLOSE TO PROPERTY LINES AS TO ENDANGER ADJOINING PROPERTY WITHOUT PROTECTING SUCH PROPERTY FROM EROSION, SLIDING, SETTLING, OR CRACKING.

   f. NO FILL SHOULD BE PLACED WHERE IT WILL SLIDE OR WASH UPON THE PREMISES OF ANOTHER OWNER OR UPON ADJACENT WETLANDS, WATERCOURSES, OR WATER BODIES.

   g. PRIOR TO ANY RE-GRADING, A STABILIZED CONSTRUCTION ENTRANCE SHALL BE PLACED AT THE ENTRANCE TO THE WORK AREA IN ORDER TO REDUCE MUD AND OTHER SEDIMENTS FROM LEAVING THE SITE.

TOPSOILING

GENERAL:

1. TOPSOIL SHALL BE SPREAD OVER ALL EXPOSED AREAS IN ORDER TO PROVIDE A SOIL MEDIUM HAVING FAVORABLE CHARACTERISTICS FOR THE ESTABLISHMENT, GROWTH, AND MAINTENANCE OF VEGETATION.

2. UPON ATTAINING FINAL SUBGRADES, SCARIFY SURFACE TO PROVIDE A GOOD BOND WITH TOPSOIL.

3. REMOVE ALL LARGE STONES, TREE LIMBS, ROOTS AND CONSTRUCTION DEBRIS.

4. APPLY LIME ACCORDING TO SOIL TEST OR AT THE RATE OF TWO (2) TONS PER ACRE.

MATERIAL:

1. TOPSOIL SHOULD HAVE PHYSICAL, CHEMICAL, AND BIOLOGICAL CHARACTERISTICS FAVORABLE TO THE GROWTH OF PLANTS.

2. TOPSOIL SHOULD HAVE A SANDY OR LOAMY TEXTURE.

3. TOPSOIL SHOULD BE RELATIVELY FREE OF SUBSOIL MATERIAL AND MUST BE FREE OF STONES (OVER 1" IN DIAMETER), LUMPS OF SOIL, ROOTS, TREE LIMBS, TRASH, OR CONSTRUCTION DEBRIS. IT SHOULD BE FREE OF ROOTS OR RHIZOMES SUCH AS THISTLE, NUTGRASS, AND QUACKGRASS.

4. AN ORGANIC MATTER CONTENT OF SIX PERCENT (6%) IS REQUIRED. AVOID LIGHT COLORED SUBSOIL MATERIAL.

5. SOLUBLE SALT CONTENT OF OVER 500 PARTS PER MILLION (PPM) IS LESS SUITABLE. AVOID TIDAL MARSH SOILS BECAUSE OF HIGH SALT CONTENT AND SULFUR ACIDITY.

6. THE pH SHOULD BE MORE THAN 6.0. IF LESS, ADD LIME TO INCREASE pH TO AN ACCEPTABLE LEVEL.

APPLICATION

AVOID SPREADING WHEN TOPSOIL IS WET OR FROZEN.

SPREAD TOPSOIL UNIFORMLY TO A DEPTH OF AT LEAST SIX INCHES (6"), OR TO THE DEPTH SHOWN ON THE LANDSCAPING PLANS.

TEMPORARY VEGETATIVE COVER

GENERAL:

1. TEMPORARY VEGETATIVE COVER SHALL BE ESTABLISHED ON ALL UNPROTECTED AREAS THAT PRODUCE SEDIMENT, AREAS WHERE FINAL GRADING HAS BEEN COMPLETED, AND AREAS WHERE THE ESTIMATED PERIOD OF BARE SOIL EXPOSURE IS LESS THAN 12 MONTHS. TEMPORARY VEGETATIVE COVER SHALL BE APPLIED IF AREAS WILL NOT BE PERMANENTLY SEEDED BY SEPTEMBER 1.

SITE PREPARATION:

1. INSTALL REQUIRED SURFACE WATER CONTROL MEASURES.

2. REMOVE LOOSE ROCK, STONE, AND CONSTRUCTION DEBRIS FROM AREA.

3. APPLY LIME ACCORDING TO SOIL TEST OR AT A RATE OF ONE (1) TON OF GROUND DOLOMITIC LIMESTONE PER ACRE (5 LBS. PER 100 SQ. FT.).

4. APPLY FERTILIZER ACCORDING TO SOIL TEST OR AT THE RATE OF 300 LBS. OF 10-10-10 PER ACRE (7 LBS. PER 1,000 SQ. FT.) AND SECOND APPLICATION OF 200 LBS. OF 10-10-10- (5 LBS. PER 1,000 SQ. FT.) WHEN GRASS IS FOUR INCHES (4") TO SIX INCHES (6") HIGH. APPLY ONLY WHEN GRASS IS DRY.

5. UNLESS HYDROSEEDED, WORK IN LIME AND FERTILIZER TO A DEPTH OF FOUR (4") INCHES USING A DISK OR ANY SUITABLE EQUIPMENT.

6. TILLAGE SHOULD ACHIEVE A REASONABLY UNIFORM LOOSE SEEDBED. WORK ON CONTOUR IF SITE IS SLOPING.

ESTABLISHMENT:

1. SELECT APPROPRIATE SPECIES FOR THE SITUATION. NOTE RATES AND SEEDING DATES (SEE VEGETATIVE COVER SELECTION & MULCHING SPECIFICATION BELOW).

2. APPLY SEED UNIFORMLY ACCORDING TO THE RATE INDICATED BY BROADCASTING, DRILLING, OR HYDRAULIC APPLICATION.

3. UNLESS HYDROSEEDED, COVER RYEGRASS SEEDS WITH NOT MORE THAN 1/4 INCH OF SOIL USING SUITABLE EQUIPMENT.

4. MULCH IMMEDIATELY AFTER SEEDING IF REQUIRED. (SEE VEGETATIVE COVER SELECTION & MULCHING SPECIFICATION BELOW.) APPLY STRAW OR HAY MULCH AND ANCHOR TO SLOPES GREATER THAN 3% OR WHERE CONCENTRATED FLOW WILL OCCUR.

PERMANENT VEGETATIVE COVER

GENERAL:

1. PERMANENT VEGETATIVE COVER SHALL BE ESTABLISHED AS VARIOUS SECTIONS OF THE PROJECT ARE COMPLETED IN ORDER TO STABILIZE THE SOIL, REDUCE DOWNSTREAM DAMAGE FROM SEDIMENT AND RUNOFF, AND TO ENHANCE THE AESTHETIC NATURE OF THE SITE. IT WILL BE APPLIED TO ALL CONSTRUCTION AREAS SUBJECT TO EROSION WHERE FINAL GRADING HAS BEEN COMPLETED AND A PERMANENT COVER IS NEEDED.

SITE PREPARATION:

2. INSTALL REQUIRED SURFACE WATER CONTROL MEASURES.

3. REMOVE LOOSE ROCK, STONE, AND CONSTRUCTION DEBRIS FROM AREA.

4. PERFORM ALL PLANTING OPERATIONS PARALLEL TO THE CONTOURS OF THE SLOPE.

5. APPLY TOPSOIL AS INDICATED ELSEWHERE HEREIN.

6. APPLY FERTILIZER ACCORDING TO SOIL TEST OR:

SPREAD SEEDING: WORK DEEPLY IN SOIL, BEFORE SEEDING, 300 LBS. OF 10-10-10 FERTILIZER PER ACRE (7 LBS. PER 1,000 SQ. FT.); THEN SIX (6) TO EIGHT (8) WEEKS LATER, APPLY ON THE SURFACE AN ADDITIONAL 300 LBS. OF 10-10-10 FERTILIZER PER ACRE. AFTER SEPTEMBER 1, TEMPORARY VEGETATIVE COVER SHALL BE APPLIED.

FALL SEEDING: WORK DEEPLY IN SOIL, BEFORE SEEDING, 600 LBS. OF 10-10-10 FERTILIZER PER ACRE (14 LBS. PER 1,000 SQ. FT.).

VEGETATIVE COVER SELECTION & MULCHING

TEMPORARY VEGETATIVE COVER:

PERENNIAL RYEGRASS 3 LBS./1,000 SQ.FT.
(IOLUIUM PERENNE)

PERMANENT VEGETATIVE COVER:

GENERAL SEEDING:

10% AMERICAN KENTUCKY BLUEGRASS
10% VICTORY II CHEWINGS FESCUE
20% *JASPER II CREEPING RED FESCUE
20% SPARTAN HARD FESCUE
30% *CUTTER PERENNIAL RYE GRASS

*HIGH ENDOPHYTE

SEEDING RATE - 220 POUNDS PER 43,560 SF

TEMPORARY MULCHING:

STRAY OR HAY 70-90 LBS./1,000 SQ.FT.
(TEMPORARY VEGETATIVE AREAS)

WOOD FIBER IN HYDROMULCH SLURRY 25-50 LBS./1,000 SQ. FT.

ESTABLISHMENT:

1. SMOOTH AND FIRM SEEDBED WITH CULTIPACKER OR OTHER SIMILAR EQUIPMENT PRIOR TO SEEDING (EXCEPT WHEN HYDROSEEDING).

2. SELECT ADAPTED SEED MIXTURE FOR THE SPECIFIC SITUATION. NOTE RATES AND THE SEEDING DATES (SEE VEGETATIVE COVER SELECTION & MULCHING SPEC. BELOW).

3. APPLY SEED UNIFORMLY ACCORDING TO RATE INDICATED, BY BROADCASTING, DRILLING, OR HYDRAULIC APPLICATION.

4. COVER GRASS AND LEGUME SEED WITH NOT MORE THAN 1/4 INCH OF SOIL WITH SUITABLE EQUIPMENT (EXCEPT WHEN HYDROSEEDING).

5. MULCH IMMEDIATELY AFTER SEEDING, IF REQUIRED, ACCORDING TO TEMPORARY MULCHING SPECIFICATIONS. (SEE VEGETATIVE COVER SELECTION & MULCHING SPECIFICATION BELOW).

6. USE PROPER INOCULANT ON ALL LEGUME SEEDINGS, USE FOUR (4) TIMES NORMAL RATES WHEN HYDROSEEDING.

7. USE SOD WHERE THERE IS A HEAVY CONCENTRATION OF WATER AND IN CRITICAL AREAS WHERE IT IS IMPORTANT TO GET A QUICK VEGETATIVE COVER TO PREVENT EROSION.

MAINTENANCE:

1. TEST FOR SOIL ACIDITY EVERY THREE (3) YEARS AND LIME AS REQUIRED.

2. ON SITES WHERE GRASSES PREDOMINATE, BROADCAST ANNUALLY 500 POUNDS OF 10-10-10 FERTILIZER PER ACRE (12 LBS. PER 1,000 SQ. FT.) OR AS NEEDED ACCORDING TO ANNUAL SOIL TESTS.

3. ON SITES WHERE LEGUMES PREDOMINATE, BROADCAST EVERY THREE (3) YEARS OR AS INDICATED BY SOIL TEST 300 POUNDS OF 0-20-20 OR EQUIVALENT PER ACRE (8 LBS PER 1,000 SQ. FT.).

EROSION CHECKS

GENERAL:

1. TEMPORARY PERVIOUS BARRIERS USING BALES OF HAY OR STRAW, HELD IN PLACE WITH STAKES DRIVEN THROUGH THE BALES AND INTO THE GROUND OR GEOTEXTILE FABRIC FASTENED TO A FENCE POST AND BURIED INTO THE GROUND, SHALL BE INSTALLED AND MAINTAINED AS REQUIRED TO CHECK EROSION AND REDUCE SEDIMENTATION.

CONSTRUCTION:

1. BALES SHOULD BE PLACED IN A ROW WITH ENDS TIGHTLY ABUTTING THE ADJACENT BALES.

2. EACH BALE SHALL BE EMBEDDED INTO THE SOIL A MINIMUM OF FOUR (4") INCHES.

3. BALES SHALL BE SECURELY ANCHORED IN PLACE BY WOOD STAKES OR REINFORCEMENT BARS DRIVEN THROUGH THE BALES AND INTO THE GROUND. THE FIRST STAKE IN EACH BALE SHALL BE ANGLED TOWARD THE PREVIOUSLY LAID BALE TO FORCE BALES TOGETHER.

4. GEOTEXTILE FABRIC SHALL BE SECURELY ANCHORED AT THE TOP OF A THREE FOOT (3') HIGH FENCE AND BURIED A MINIMUM OF FOUR INCHES (4") TO THE SOIL. SEAMS BETWEEN SECTIONS OF FILTER FABRIC SHALL OVERLAP A MINIMUM OF TWO FEET (2').

INSTALLATION AND MAINTENANCE:

1. BALED HAY EROSION BARRIERS SHALL BE INSTALLED AT ALL STORM SEWER INLETS.

2. BALED HAY EROSION BARRIERS AND GEOTEXTILE FENCE SHALL BE INSTALLED AT THE LOCATION INDICATED ON THE PLAN AND IN ADDITIONAL AREAS AS MAY BE DEEMED APPROPRIATE DURING CONSTRUCTION.

3. ALL EROSION CHECKS SHALL BE MAINTAINED UNTIL ADJACENT AREAS ARE STABILIZED.

4. INSPECTION SHALL BE FREQUENT (AT MINIMUM MONTHLY AND BEFORE AND AFTER HEAVY RAIN) AND REPAIR OR REPLACEMENT SHALL BE MADE PROMPTLY AS NEEDED.

5. EROSION CHECKS SHALL BE REMOVED WHEN THEY HAVE SERVED THEIR USEFULNESS SO AS NOT TO BLOCK OR IMPEDE STORMWATER FLOW OR DRAINAGE.

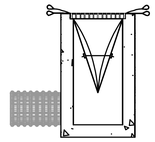

INSTALLATION DETAIL

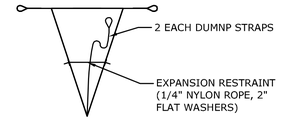

BAG DETAIL

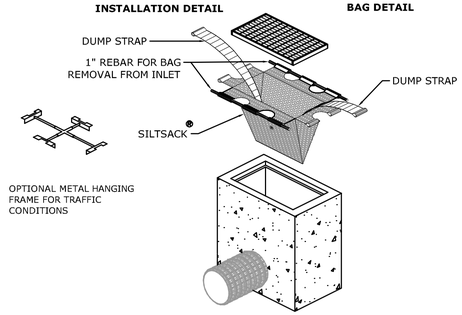

INLET PROTECTION
NOT TO SCALE

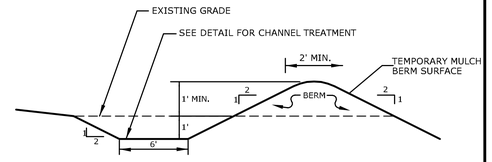

DIVERSION BERM AND SWALE
NOT TO SCALE

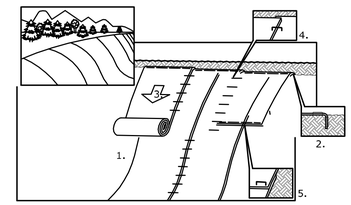

1. PREPARE SOIL BEFORE INSTALLING BLANKETS, INCLUDING APPLICATION OF LIME, FERTILIZER, AND SEED. NOTE: WHEN USING SCC225, DO NOT SEED PREPARED AREA. SCC225 MUST BE INSTALLED WITH PAPER SIDE DOWN.
2. BEGIN AT THE TOP OF THE SLOPE BY ANCHORING THE BLANKET IN A 6" DEEP BY 6" WIDE TRENCH. BACKFILL AND COMPACT THE TRENCH AFTER STAPLING.
3. ROLL THE BLANKETS DOWN THE SLOPE IN THE DIRECTION OF THE WATER FLOW.
4. THE EDGES OF PARALLEL BLANKETS MUST BE STAPLED WITH APPROXIMATELY 2" OVERLAP.
5. WHEN BLANKETS MUST BE SPLICED DOWN THE SLOPE, PLACE BLANKETS END OVER END (SHINGLE STYLE) WITH APPROXIMATELY 6" OVERLAP. STAPLE THROUGH OVERLAP AREA, APPROXIMATELY 12" APART.

REFER TO GENERAL STAPLE PATTERN GUIDE IN NORTH AMERICAN GREEN CATALOG FOR CORRECT STAPLE PATTERN RECOMMENDATIONS FOR SLOPE INSTALLATIONS.

APPLICATION OF EROSION CONTROL BLANKET ON SLOPES
NOT TO SCALE

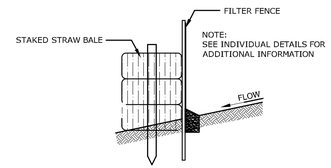

SEDIMENT FILTER FENCE AND HAYBALE REINFORCEMENT
NOT TO SCALE

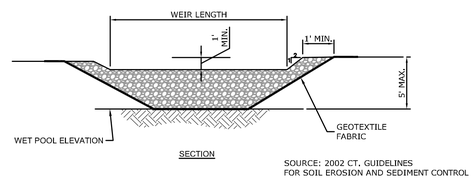

SOURCE: 2002 CT. GUIDELINES
FOR SOIL EROSION AND SEDIMENT CONTROL

SEDIMENT TRAP RIPRAP OVERFLOW SPILLWAY
NOT TO SCALE

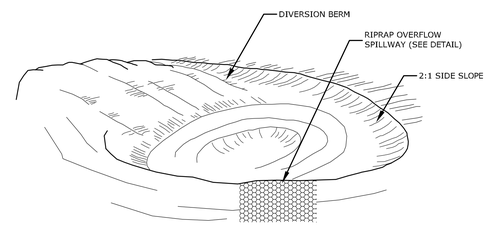

NOTES:
REFER TO SEDIMENT & EROSION CONTROL PLAN FOR APPROXIMATE DIMENSIONS AND REQUIRED VOLUME.

SOURCE: 2002 CT. GUIDELINES
FOR SOIL EROSION AND SEDIMENT CONTROL

TEMPORARY SEDIMENT TRAP
NOT TO SCALE

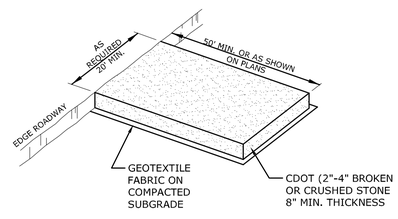

NOTE:
CONSTRUCTION ENTRANCE PAD SHALL BE INSTALLED AND MAINTAINED DURING OPERATIONS WHICH PROMOTE VEHICULAR TRACKING OF MUD

CONSTRUCTION ENTRANCE PAD
NOT TO SCALE

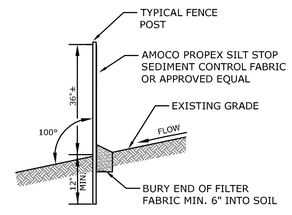

SEDIMENT FILTER FENCE
NOT TO SCALE

MILONE & MACBROOM®
99 Realty Drive
Cheshire, Connecticut 06410
(203) 271-1773 Fax (203) 272-9733
www.milloneandmacbroom.com

DESCRIPTION	DATE	BY

SITE DETAILS

HAMDEN HIGH SCHOOL
BASEBALL / MULTIPURPOSE FIELD IMPROVEMENTS
2040 DIXWELL AVENUE
HAMDEN, CONNECTICUT

KCF	CEH	DJK
DESIGNED	DRAWN	CHECKED

SCALE: AS NOTED
DATE: MAY 11, 2016
PROJECT NO.: 1228-61
SHEET NO.:
SHEET NAME: 15

Copyright Milone & MacBroom, Inc - 2015

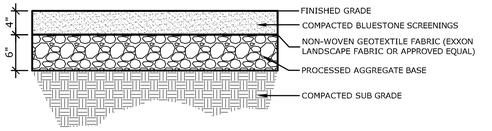

STONEDUST MOW SURFACE

NOT TO SCALE

ALL AREA DRAIN GRATES SHALL BE AS FOLLOWS UNLESS OTHERWISE NOTED ON PLANS
15" CAST IRON GRATE DRAIN AREA = 92.5SQ. INCH GRATE HAS H-20 (HEAVY TRAFFIC) DOT RATING QUALITY: MATERIAL SHALL CONFORM TO ASTM A48 - CLASS 30B PAINT: CASTINGS ARE FURNISHED WITH A BLACK PAINT

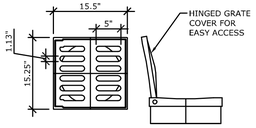

NYLOPLAST USA INC
3130 VERONA AVENUE
BUFORD, GEORGIA 30518
TEL. (404) 932-2443
FAX: (404) 932-2490

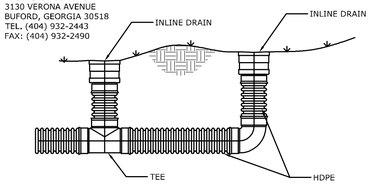

AREA DRAIN AND GRATE

NOT TO SCALE

ACO KS100S "KLASSIKDRAIN" CHANNEL TRENCH DRAIN WITH TYPE 494Q-"BLACK PLASTIC" ADA COMPLIANT GRATE SECURED WITH "QUICKLOK" BOLTLESS LOCKING SYSTEM OR APPROVED EQUAL RATED TO WITHSTAND LOADINGS UP TO 3,500 LBS.

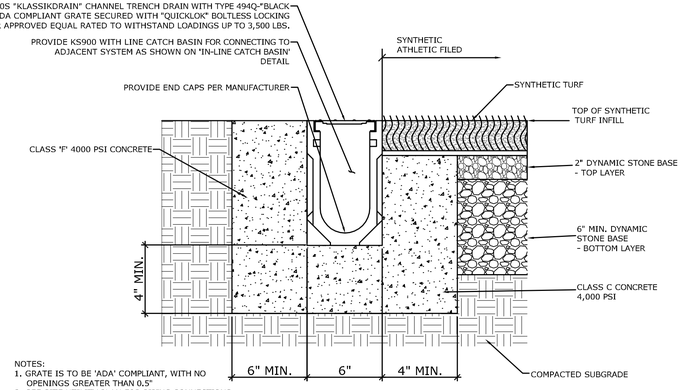

NOTES:
1. GRATE IS TO BE 'ADA' COMPLIANT, WITH NO OPENINGS GREATER THAN 0.5"
2. SEE SITE UTILITY PLAN FOR PIPING CONNECTIONS.

CHANNEL DRAIN WITH PLASTIC ADA GRATE

NOT TO SCALE

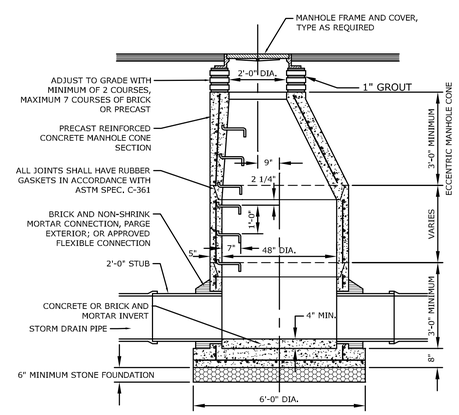

NOTE:
1. 5' OR 6' DIAMETER PRECAST BASES MAY BE REQUIRED DUE TO SIZE OR NUMBER OF PIPES AT THE MANHOLE. PRECAST REDUCERS WILL BE PLACED ABOVE THE 5' OR 6' BASES AS DIRECTED BY THE ENGINEER. WALL THICKNESS TO INCREASE BY 1" FOR EACH 1'-0" OF INSIDE DIAMETER.

PRECAST CONCRETE STORM DRAINAGE MANHOLE

NOT TO SCALE

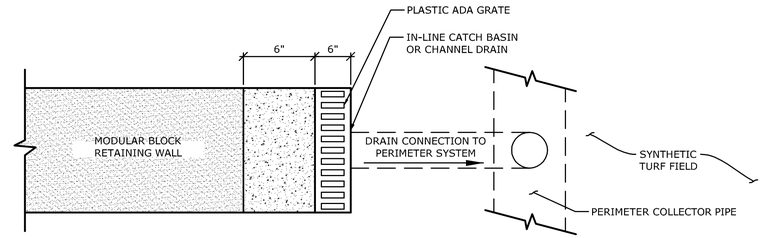

PLAN VIEW

NOT TO SCALE

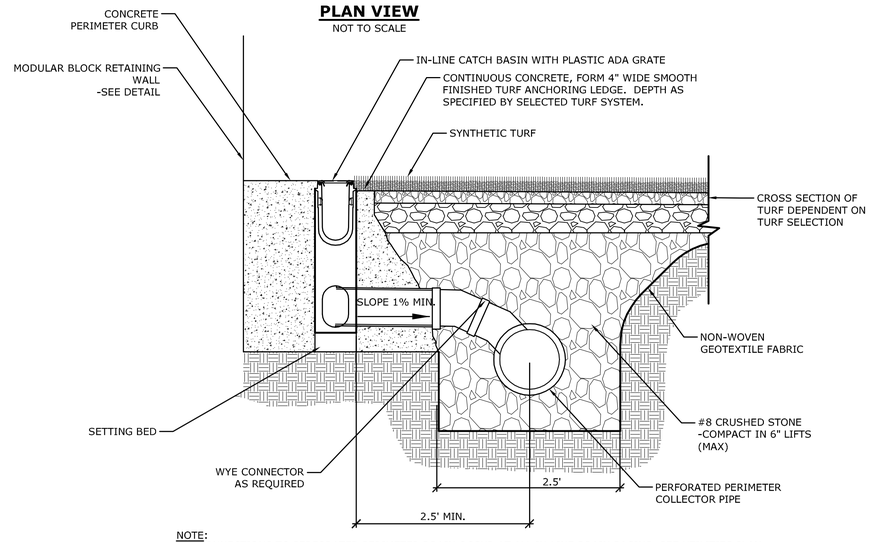

NOTE:
1. CONNECTIONS TO PERFORATED PERIMETER DRAIN OCCUR AT ALL IN-LINE DRAIN BASINS, SEE UTILITIES PLAN.

SECTION AT CHANNEL DRAIN IN-LINE CATCH BASIN

NOT TO SCALE

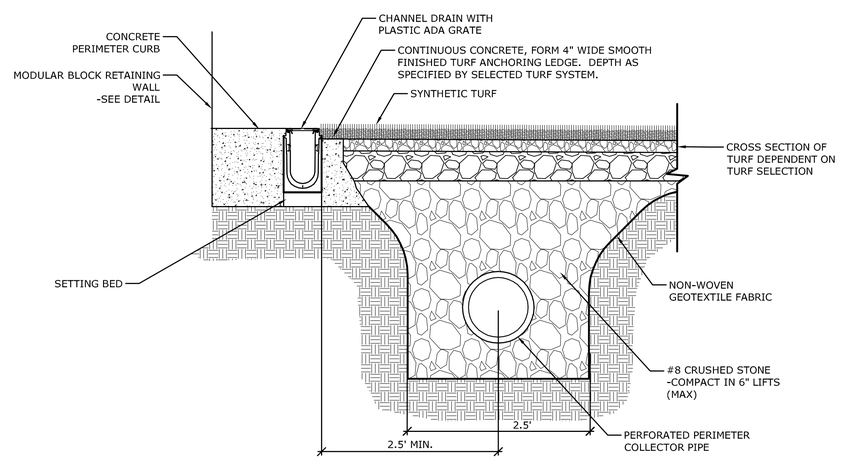

SECTION AT CHANNEL DRAIN

NOT TO SCALE

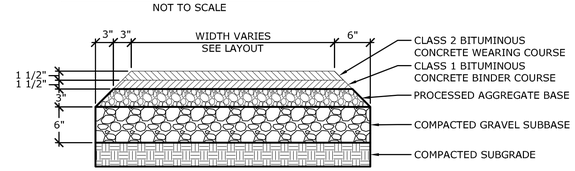

BITUMINOUS CONCRETE WALK

NOT TO SCALE

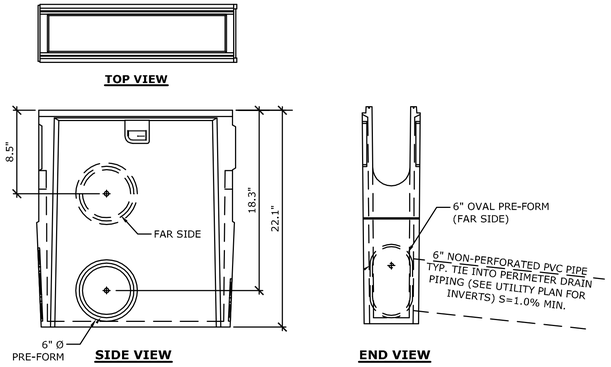

NOTES:
1. CHANNEL DRAIN AND IN-LINE CATCH BASIN SHALL BE FOR SYSTEM 4002 AS MANUFACTURED BY ACO POLYMER PRODUCTS, INC., CHARDON, OH, PH#(800) 543-4764 AND DISTRIBUTED BY SPORTSFIELD SPECIALTIES, INC., DELHI, NY, PH# (888) 975-EDGE OR APPROVED EQUAL.
2. INVERT OF EDGE DRAIN DOES NOT CHANGE. DEPTH TO BOTTOM OF CHANNEL REMAINS CONSTANT. NEUTRAL SLOPE.
3. EDGE DRAIN GRATE SHALL BE TYPE: ADA PLASTIC - COLOR: BLACK ADA COMPLIANT GRATE WITH QUICK LOCK AS MANUFACTURED BY ACO POLYMER PRODUCTS, INC., CHARDON, OH, PH# (800) 543-4764 AND DISTRIBUTED BY SPORTSFIELD SPECIALTIES, INC., DELHI, NY, PH# (888) 975-EDGE OR APPROVED EQUAL.
4. ALL CONNECTIONS TO EDGE CHANNEL DRAIN TO BE 6" ADS PIPE (NON-PERFORATED).
5. FOR PROPOSED LOCATIONS, QUANTITY AND INVERTS OF BASINS SEE SITE GRADING PLAN.
6. FURNISH PLASTIC TRASH BUCKET @ EACH IN-LINE CATCH BASIN.

CHANNEL DRAIN IN-LINE CATCH BASIN

NOT TO SCALE

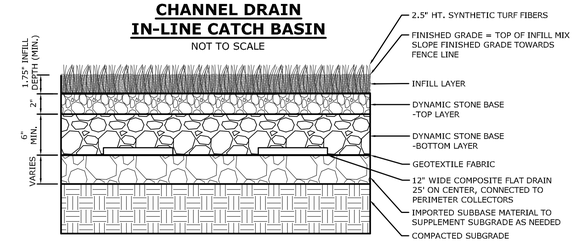

NOTE:
SLOPE BOTTOM DYNAMIC STONE LAYER AND SUBGRADE AS SHOWN ON THE GRADING PLAN TOWARDS COLLECTOR PIPES.

SYNTHETIC INFILL TURF SYSTEM A

NOT TO SCALE

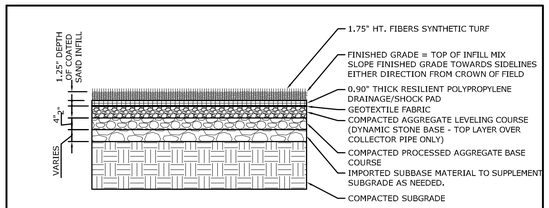

NOTE(S):
1. SLOPE SUBGRADE, LEVELING COURSE, DRAINAGE BOARD/SHOCK PAD AND TURF WITH FINISHED GRADE AS SHOWN ON GRADING PLAN.

SYNTHETIC INFILL TURF ON DRAINAGE BOARD/SHOCKPAD FOR SYSTEM B

NOT TO SCALE

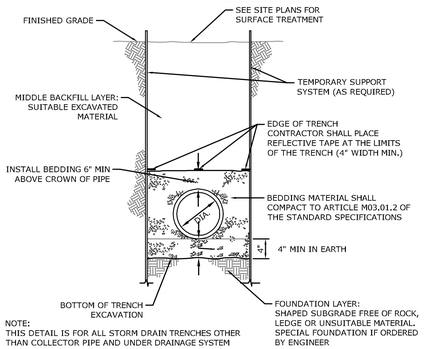

NOTE:
THIS DETAIL IS FOR ALL STORM DRAIN TRENCHES OTHER THAN COLLECTOR PIPE AND UNDER DRAINAGE SYSTEM

STORM DRAIN TRENCH

NOT TO SCALE

MILONE & MACBROOM®
99 Realty Drive
Cheshire, Connecticut 06410
(203) 271-1773 Fax (203) 272-9733
www.milloneandmacbroom.com

DESCRIPTION	DATE	BY

SITE DETAILS

HAMDEN HIGH SCHOOL
BASEBALL / MULTIPURPOSE FIELD IMPROVEMENTS
2040 DIXWELL AVENUE
HAMDEN, CONNECTICUT

KCF	CEH	DJK
DESIGNED	DRAWN	CHECKED

SCALE: AS NOTED

DATE: MAY 11, 2016

PROJECT NO.: 1228-61

SHEET NO.: 16

SHEET NAME

Copyright Milone & MacBroom, Inc - 2015

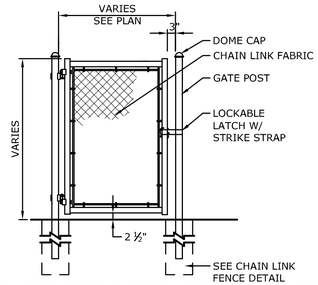

NOTES:
1. MATERIALS AND METHOD OF CONSTRUCTION SHALL CONFORM TO CHAIN LINK FENCE DETAIL ON THIS SHEET
2. CONTRACTOR TO SUBMIT SHOP DRAWINGS
3. GATE SWINGING DIRECTION:
   3.1. ALL SWING GATES ADJACENT TO SYNTHETIC TURF SHALL ONLY BE ALLOWED TO SWING AWAY FROM THE SYNTHETIC TURF WHERE POSSIBLE.
   3.2. PROVIDE STOP AS REQUIRED TO PREVENT SWINGING OF GATE TOWARDS THE SYNTHETIC SURFACE.

SINGLE CHAIN LINK FENCE GATE
NOT TO SCALE

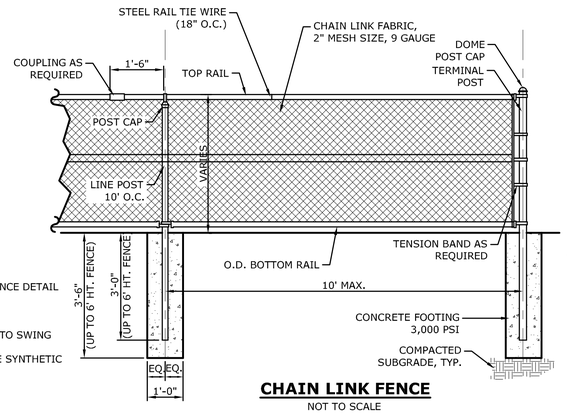

CHAIN LINK FENCE
NOT TO SCALE

CHAIN LINK FENCE POST AND RAIL SIZING		
POST OR RAIL TYPE	4FT & 6' HT. FENCE	8FT & 10' HT. FENCE
TERMINAL OR COMMON	2-7/8"	2-7/8"
LINE POST	1-7/8"	2-7/8"
TOP RAIL	1-5/8"	1-5/8"
INTERMEDIATE RAIL	NONE	1-5/8"
BOTTOM RAIL	1-5/8"	1-5/8"
GATE POST	2-7/8"	2-7/8"
GATE FRAME	1-7/8"	1-7/8"

NOTE:
1. ALL CHAIN LINK POSTS, RAILS, FABRIC AND HARDWARE TO BE GALVANIZED
2. CONCRETE FOOTINGS FOR FENCE HEIGHTS GREATER THAN 6' ARE TO BE INCREASED IN DEPTH BY 1'

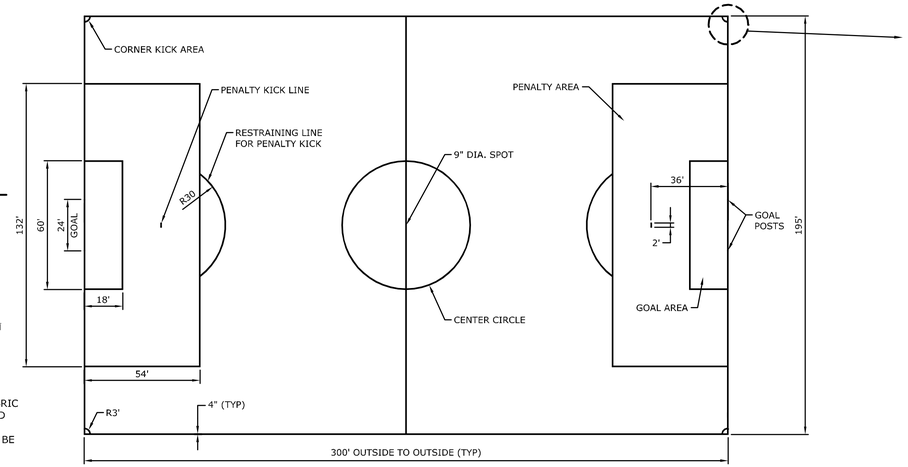

SOCCER LAYOUT PLAN
1"=30'

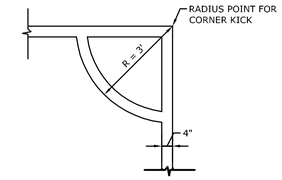

SOCCER CORNER KICK DETAIL
½"=1'

SOCCER LAYOUT NOTES
1. CONTRACTOR SHALL VERIFY ALL DIMENSIONS.
2. THE FIELD STRIPING IS TO BE 195' X 300'.
3. ALL LINE WORK IS TO BE LAID OUT WITH A TOLERANCE OF 1/4 INCH.
4. ALL SOCCER LINES ARE 4 INCH TUFTED OR INLAID COLOR: BLUE AS DIMENSIONED ON THE SOCCER LAYOUT PLAN.
5. THE SOCCER GOAL AREA IS 18 FEET BY 60 FEET, REFER TO PLAN FOR LOCATION.
6. THE SOCCER PENALTY AREA IS 54 FEET BY 132 FEET, REFER TO PLAN FOR LOCATION.
7. THE PENALTY MARK IS A 2 FOOT LINE, 4 INCHES WIDE, 36 FEET FROM THE GOAL LINE AND CENTERED ON THE GOAL. THE RESTRAINING LINE FOR PENALTY KICKS IS AN ARC 30 FEET FROM THIS MARK OUTSIDE OF THE PENALTY AREA. REFER TO PLAN FOR LOCATION.
8. THE HALFWAY LINE FOR THE SOCCER FIELD IS A 4 INCH LINE WITH A CIRCLE 30 FEET IN RADIUS IN THE CENTER OF THE FIELD, REFER TO PLAN FOR LOCATION.
9. THE CORNERS OF THE SOCCER FIELD SHALL HAVE A 3 FOOT RADIUS IN THE DESIGNATING THE CORNER KICK AREA. REFER TO CORNER KICK DETAIL.

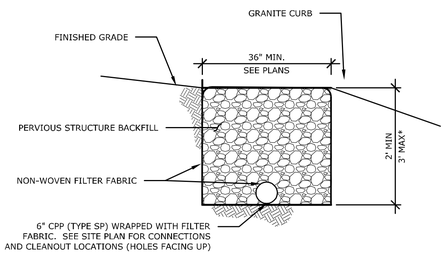

*SEE SITE PLAN FOR INVERTS, CONNECTIONS, AND CLEANOUT LOCATIONS

6" UNDERDRAIN
NOT TO SCALE

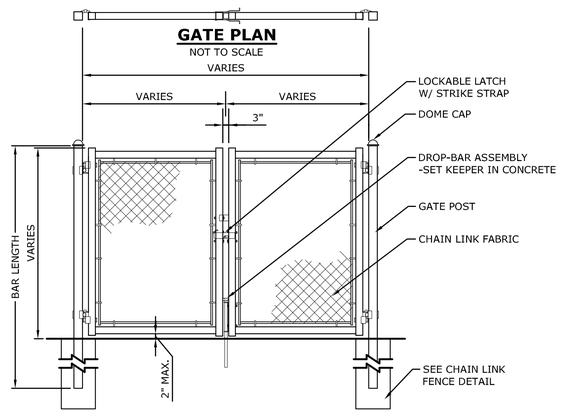

GATE PLAN
NOT TO SCALE

DOUBLE CHAIN LINK FENCE GATE
NOT TO SCALE

DOUBLE LEAF GATES		
OPENING	GATE POSTS	HINGE SPACE (S)
FACE TO FACE	SQ & RND SIZES	POST TO UPRIGHT
	2 7/8" 2.875" OD	FOR SQUARE & ROUND GATE POSTS: 2 7/8"

NOTES:
1. THIS DETAIL IS FOR GATES UP TO 12' IN TOTAL WIDTH. ANY GATES BEYOND 12' IN TOTAL WIDTH SHALL HAVE 8" MIN. RUBBER INFLATABLE SUPPORT WHEELS ATTACHED TO ENDS OF GATE ARMS AND SET ON THE POSTS TO SIT OUTSIDE OF THE FIELD OF PLAY.
2. MATERIALS AND METHOD OF CONSTRUCTION SHALL CONFORM TO CHAIN LINK FENCE DETAIL ON THIS SHEET.
3. CONTRACTOR TO SUBMIT SHOP DRAWINGS FOR REVIEW AND APPROVAL

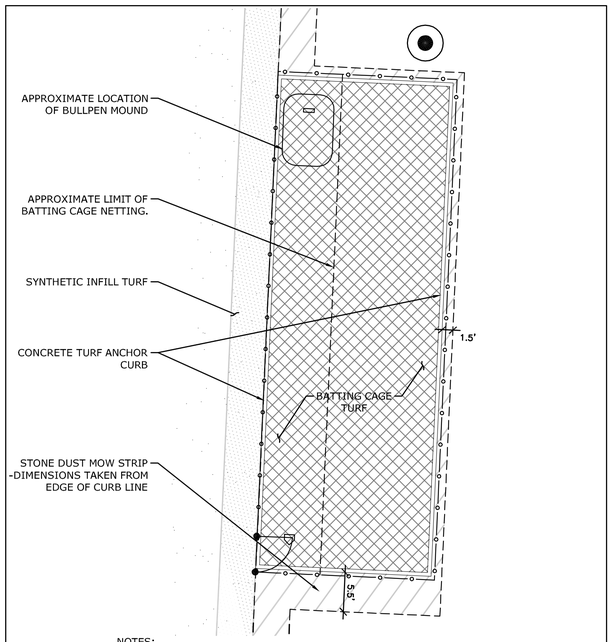

NOTES:
1. SUBGRADE IS TO BACK PITCH TOWARDS COLLECTOR PIPE AT 0.50%. SEE UTILITY PLAN FOR COLLECTOR PIPE LOCATION.
2. SEE 'BATTING CAGE TURF SECTION' BELOW FOR ADDITIONAL INFORMATION.
3. BATTING CAGE TURF SHALL MEET THE FOLLOWING:
   3.1. 100% POLYPROPYLENE FIBER, 5,000 DENIER MIN.
   3.2. PILE HEIGHT = 0.3" MIN.
   3.3. 3/16" TUFTING GAUGE
   3.4. 5mm PAD/CUSHION
   3.5. TOTAL SYSTEM WEIGHT OF 100 OZ./SQ.DYD., NON-INFILLED

BID ALT. #2
BATTING CAGE TURF IN BATTING CAGE AREA
SCALE: 1"=10'

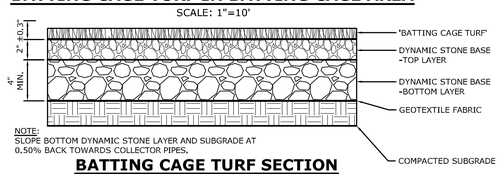

NOTE:
SLOPE BOTTOM DYNAMIC STONE LAYER AND SUBGRADE AT 0.50% BACK TOWARDS COLLECTOR PIPES.

BATTING CAGE TURF SECTION
NOT TO SCALE

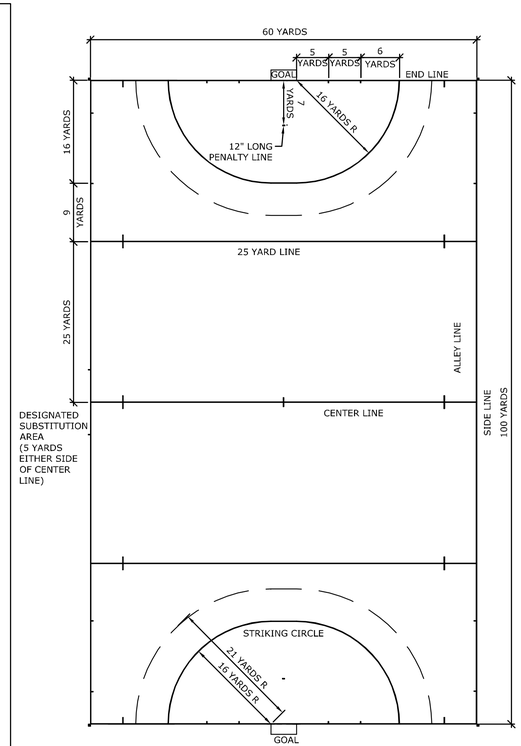

FIELD HOCKEY PLAN
1"=30'

GENERAL FIELD STRIPING NOTES:
1. CONTRACTOR TO SUBMIT SCALED SHOP DRAWINGS FOR ALL FIELD STRIPING OPTIONS SHOWING DIMENSIONS, COLORS, AND INLAID AND PAINTED LINES.
2. ALL FIELD STRIPING AND ASSOCIATED AREAS SHALL CONFORM TO CURRENT NFHS STANDARDS AND REQUIREMENTS.

   BASEBALL INLAID & TUFTED LINES TO BE COLOR: WHITE
   SOCCER INLAID & TUFTED LINES TO BE COLOR: BLUE
   FIELD HOCKEY INLAID & TUFTED LINES TO BE COLOR: RED
3. FURNISH AND INSTALL 21 SETS OF 5 INLAID TICK MARKS ON GROUND SLEEVE PLUG CAPS TO IDENTIFY LOCATION(S) TO PLACE SYNTHETIC TURF BASES AND PITCHING RUBBERS FOR BOTH SOFTBALL AND BASEBALL IN AREAS SHOWN ON THE LAYOUT PLANS. COLOR: GRAY/SILVER

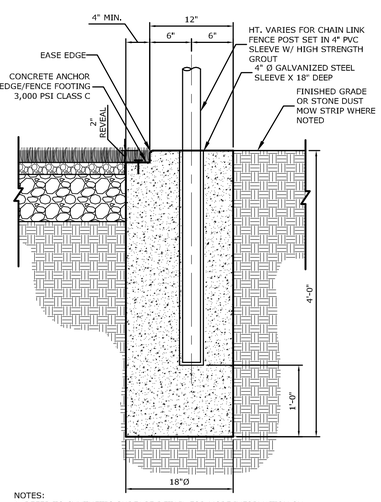

NOTES:
1. REFER TO SYNTHETIC SURFACE DETAIL FOR MORE INFORMATION ON BASE MATERIAL.
2. PROVIDE EXPANSION JOINTS IN CURB @ 20' MAXIMUM.
3. CONTRACTOR SHALL COORDINATE ANCHORAGE OF TURF WITH SUPPLIER FOR TURF ATTACHMENT REQUIREMENTS AT CURB.

FLUSH CONCRETE TURF ANCHOR CURB AT FENCE POST
NOT TO SCALE

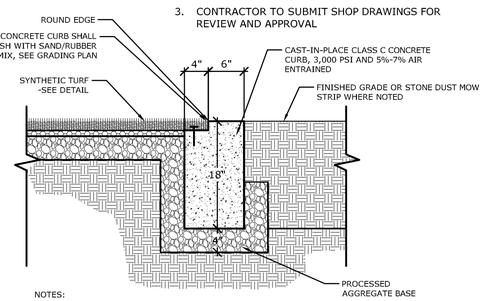

NOTES:
1. REFER TO SYNTHETIC SURFACE DETAIL FOR MORE INFORMATION ON BASE MATERIAL
2. PROVIDE EXPANSION JOINTS IN CURB @ 20' MAXIMUM
3. CONTRACTOR SHALL COORDINATE ANCHORAGE OF TURF WITH SUPPLIER FOR TURF ATTACHMENT REQUIREMENTS AT CURB

FLUSH CONCRETE TURF ANCHOR CURB
NOT TO SCALE

MILONE & MACBROOM®
99 Realty Drive
Cheshire, Connecticut 06410
(203) 271-1773 Fax (203) 272-9733
www.miloneandmacbroom.com

DESCRIPTION	DATE	BY

SITE DETAILS

HAMDEN HIGH SCHOOL
BASEBALL / MULTIPURPOSE FIELD IMPROVEMENTS
2040 DIXWELL AVENUE
HAMDEN, CONNECTICUT

KCF	CEH	DJK
DESIGNED	DRAWN	CHECKED

SCALE: AS NOTED
DATE: MAY 11, 2016
PROJECT NO.: 1228-61
SHEET NO.: 17
SHEET NAME

Copyright Milone & MacBroom, Inc - 2015

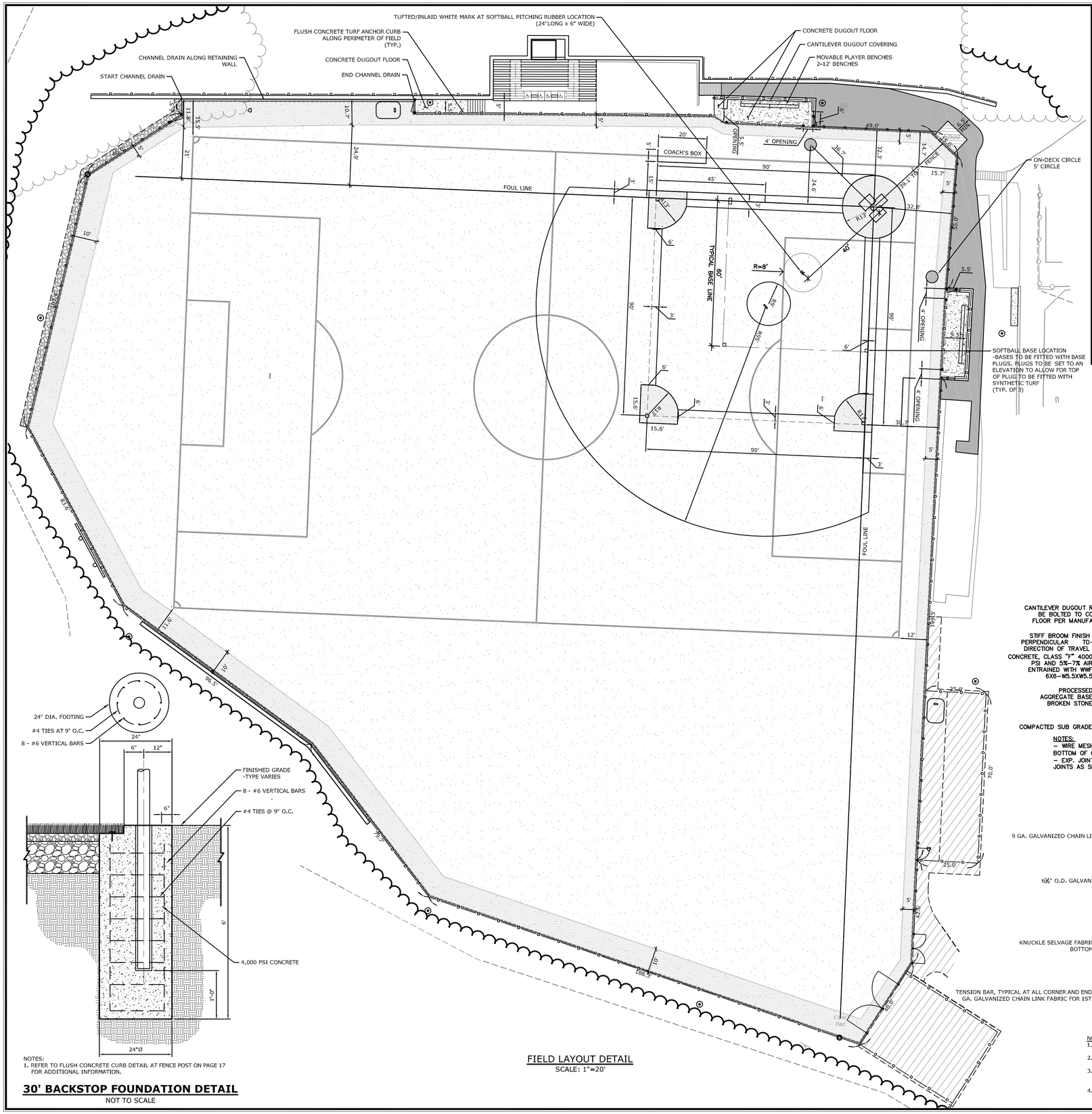

NOTES:
1. REFER TO FLUSH CONCRETE CURB DETAIL AT FENCE POST ON PAGE 17 FOR ADDITIONAL INFORMATION.

30' BACKSTOP FOUNDATION DETAIL
NOT TO SCALE

FIELD LAYOUT DETAIL
SCALE: 1"=20'

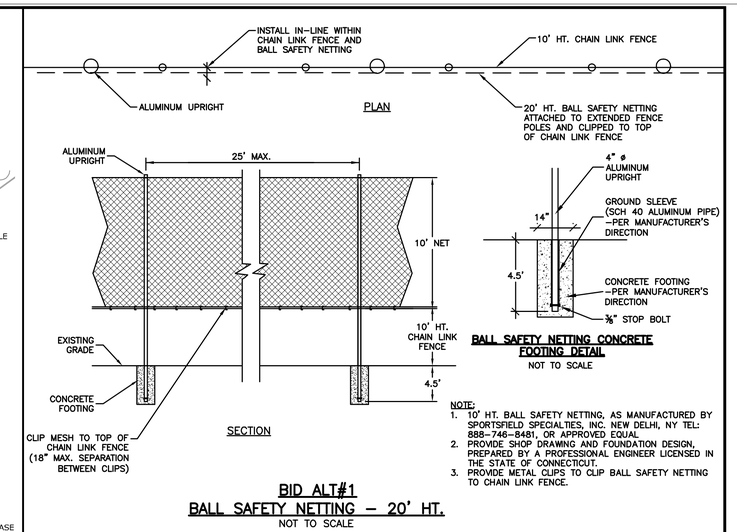

NOTE:
1. 10' HT. BALL SAFETY NETTING, AS MANUFACTURED BY SPORTSFIELD SPECIALTIES, INC. NEW DELHI, NY TEL: 888-746-8481, OR APPROVED EQUAL.
2. PROVIDE SHOP DRAWING AND FOUNDATION DESIGN, PREPARED BY A PROFESSIONAL ENGINEER LICENSED IN THE STATE OF CONNECTICUT.
3. PROVIDE METAL CLIPS TO CLIP BALL SAFETY NETTING TO CHAIN LINK FENCE.

BID ALT#1
BALL SAFETY NETTING – 20' HT.
NOT TO SCALE

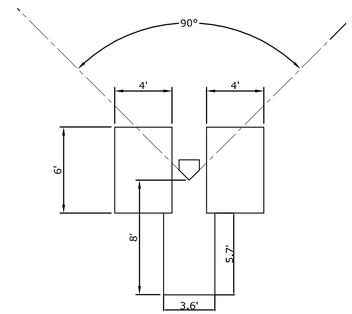

BASEBALL BATTER'S AND CATCHER'S BOX
1"=5'

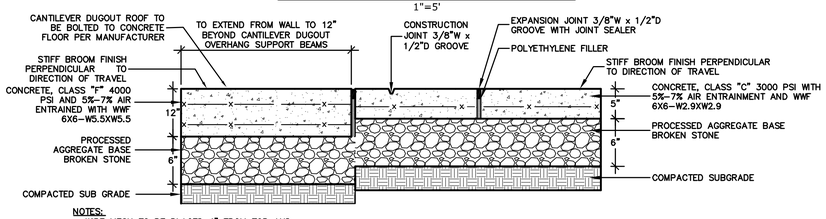

NOTES:
– WIRE MESH TO BE PLACED 4" FROM TOP AND BOTTOM OF CONCRETE FOR 12" SECTION.
– EXP. JOINTS 20' O.C. MAX. CONSTRUCTION JOINTS AS SHOWN ON PLANS

CONCRETE DUGOUT FLOOR
NOT TO SCALE

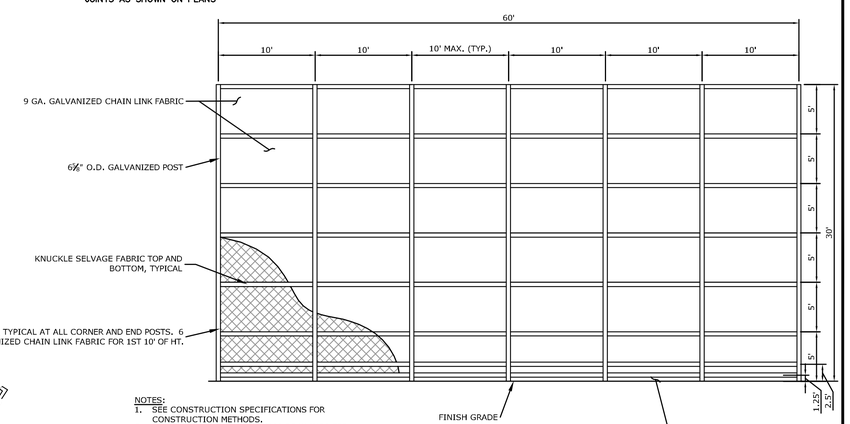

NOTES:
1. SEE CONSTRUCTION SPECIFICATIONS FOR CONSTRUCTION METHODS.
2. CONTRACTOR TO SUBMIT SHOP DRAWINGS FOR APPROVAL.
3. A SEPARATE SECTION OF CHAIN LINK MESH IS TO BE PLACED AT THE ELECTRICAL SHED FOR ACCESS TO ELECTRICAL SYSTEMS, AS REQUIRED.
4. SEE FOUNDATION DETAIL THIS SHEET

30 FOOT HIGH CHAIN LINK BACKSTOP
NOT TO SCALE

MILONE & MACBROOM®
99 Realty Drive
Cheshire, Connecticut 06410
(203) 271-1773 Fax (203) 272-9733
www.milloneandmacbroom.com

DESCRIPTION	DATE	BY

SITE DETAILS

HAMDEN HIGH SCHOOL
BASEBALL / MULTIPURPOSE FIELD IMPROVEMENTS
2040 DIXWELL AVENUE
HAMDEN, CONNECTICUT

KCF	CEH	DJK
DESIGNED	DRAWN	CHECKED

SCALE: AS NOTED
DATE: MAY 11, 2016
PROJECT NO.: 1228-61
SHEET NO.: 18
SHEET NAME

Copyright Milone & MacBroom, Inc - 2015

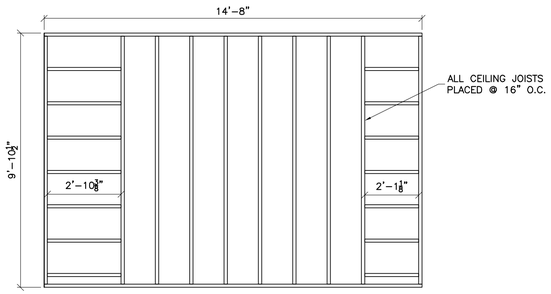

1 ROOF FRAMING PLAN

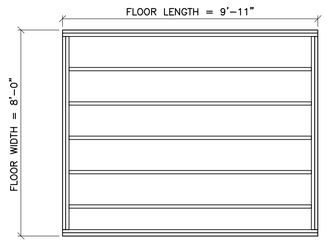

2 FLOOR FRAMING PLAN

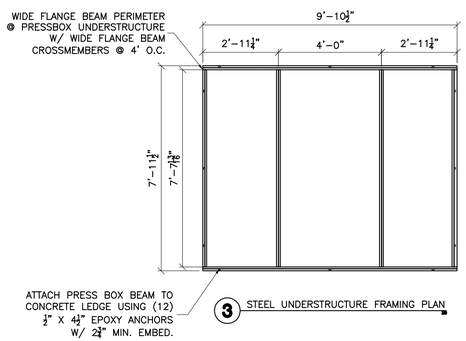

3 STEEL UNDERSTRUCTURE FRAMING PLAN

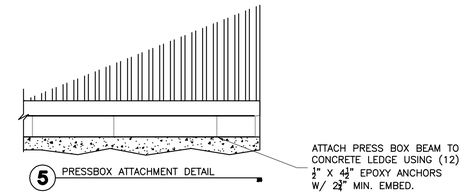

5 PRESSBOX ATTACHMENT DETAIL

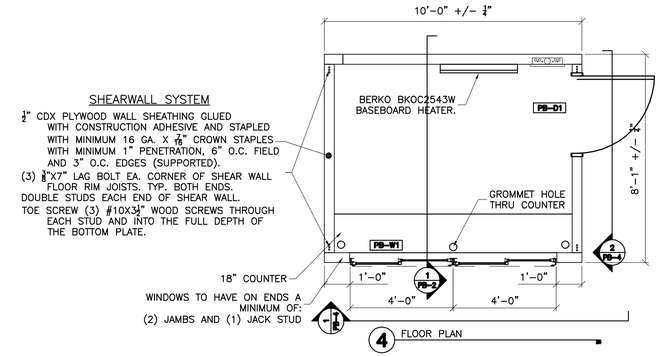

4 FLOOR PLAN

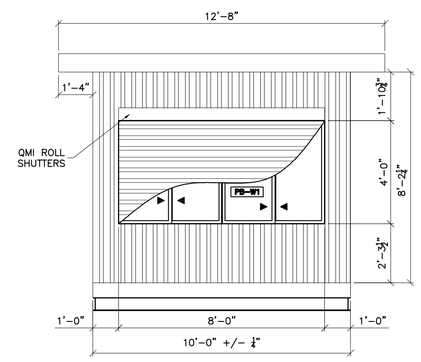

1 FRONT ELEVATION

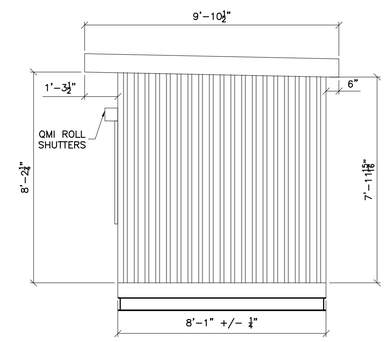

2 SIDE ELEVATION

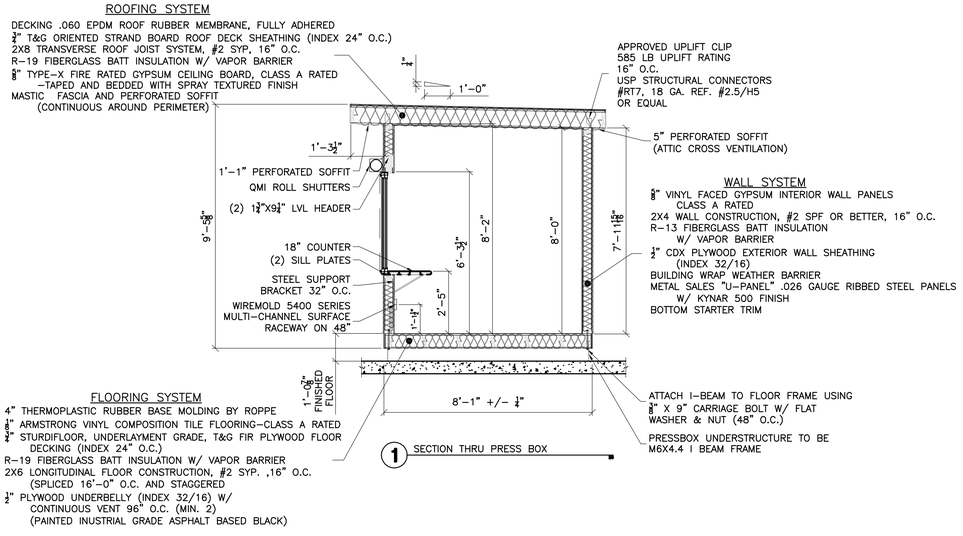

1 SECTION THRU PRESS BOX

WINDOW SCHEDULE

KEY	WIDTH	HEIGHT	TYPE	FRAME	U-FACTOR	SHGC
PB-W1	8'-0"	4'-0"	DOUBLE SLIDER	VINYL	.34	.27

PB-W1 – THV #7000 SERIES "PARAGON", DOUBLE HORIZONTAL SLIDER WINDOWS W/ EXTRUDED VINYL FRAMES, AAMA LC-25 STRUCTURAL RATING, W/ 3/4" INSULATED LOW-E, ARGON FILLED TEMPERED GLASS W/ REMOVABLE INSECT SCREENS. NATURAL LIGHT ALLOWED = 32 SQ/FT, VENTABLE AREA = 16 SQ/FT

–

DOOR SCHEDULE

DOOR						FRAME	
KEY	WIDTH	HEIGHT	THICKNESS	TYPE	MATERIAL	MATERIAL	FIRE RATING
PB-D1	3'-0"	6'-8"	0'-1 3/4"	3	STEEL	STEEL	

PB-D1 – 18GA. INSULATED HOLLOW METAL DOOR WITH 16 GA. STEEL WRAP AROUND FRAMES, 10"X10" WINDOW, VINYL WEATHER-STRIPPING, ALUMINUM THRESHOLD AND KEYED LEVER HANDLED LOCKSETS.

*NOTE – DOORS INSTALLED PER MANUFACTURERS INSTALLATION DETAILS

NOTE:

1. DETAILS FOR PRESS BOX PROVIDED BY DANT CLAYTON CORPORATION OR APPROVED EQUAL
   - www.dantclayton.com
   - 800-467-3655
2. PRESS BOX DETAIL IS INTENDED TO DEPICT HOW THE STRUCTURE COULD BE CONSTRUCTED BUT NOT NECESSARILY HOW IT HAS TO BE CONSTRUCTED. CONTRACTOR TO SUBMIT SHOP DRAWING FOR ALTERNATE PROPOSALS.

MILONE & MACBROOM®
99 Realty Drive
Cheshire, Connecticut 06410
(203) 271-1773 Fax (203) 272-9733
www.milonemacbroom.com

DESCRIPTION	DATE	BY

SITE DETAILS

HAMDEN HIGH SCHOOL
BASEBALL / MULTIPURPOSE FIELD IMPROVEMENTS
2040 DIXWELL AVENUE
HAMDEN, CONNECTICUT

KCF	CEH	DJK
DESIGNED	DRAWN	CHECKED

SCALE: AS NOTED

DATE: MAY 11, 2016

PROJECT NO.: 1228-61

SHEET NO.: 19

SHEET NAME

Copyright Milone & MacBroom, Inc - 2015

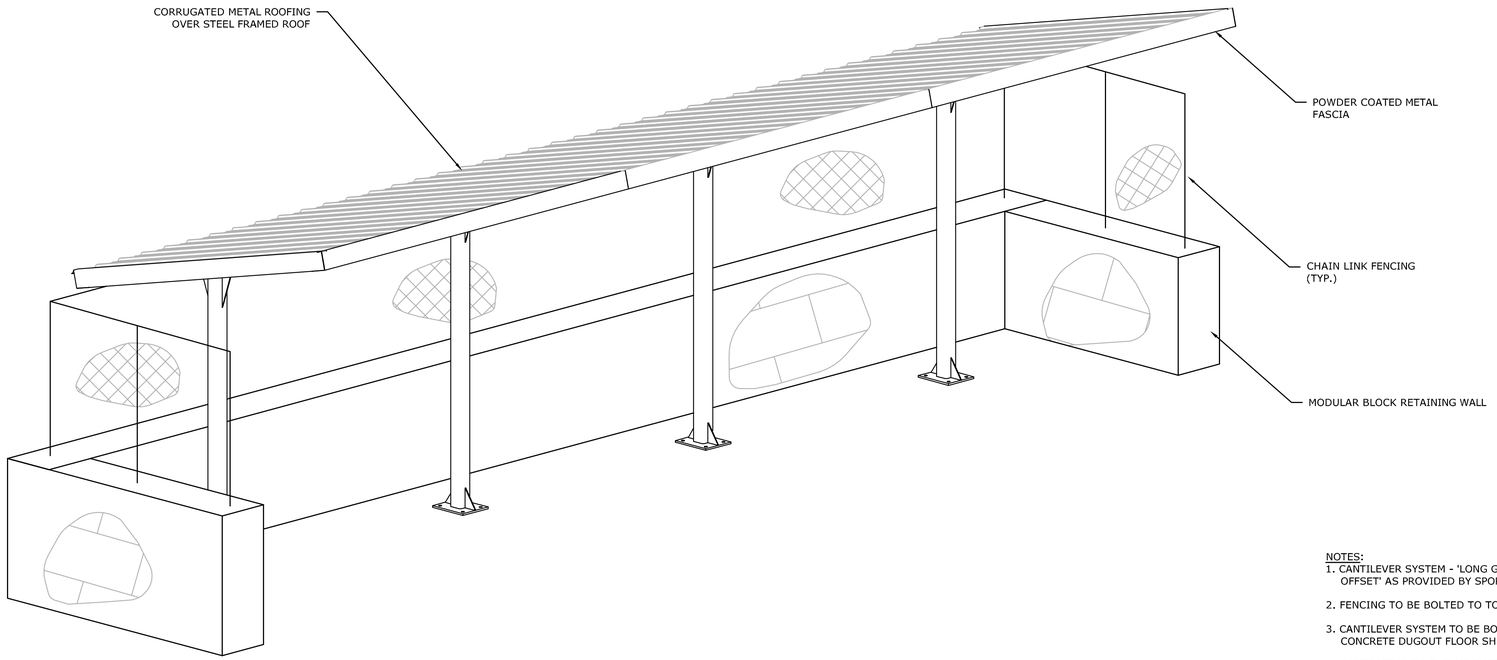

NOTES:
1. CANTILEVER SYSTEM - 'LONG GONE CANTILEVER DUGOUT - 8" REAR OFFSET' AS PROVIDED BY SPORTS FIELD SPECIALTIES OR APPROVED EQUAL.

2. FENCING TO BE BOLTED TO TOP OF MODULAR BLOCK WALL

3. CANTILEVER SYSTEM TO BE BOLTED TO CONCRETE FLOOR PER MANUFACTURER. SEE CONCRETE DUGOUT FLOOR SHEET 18 FOR FLOOR DETAIL.

4. CONTRACTOR TO SUBMIT SHOP DRAWING FOR REVIEW AND APPROVAL.

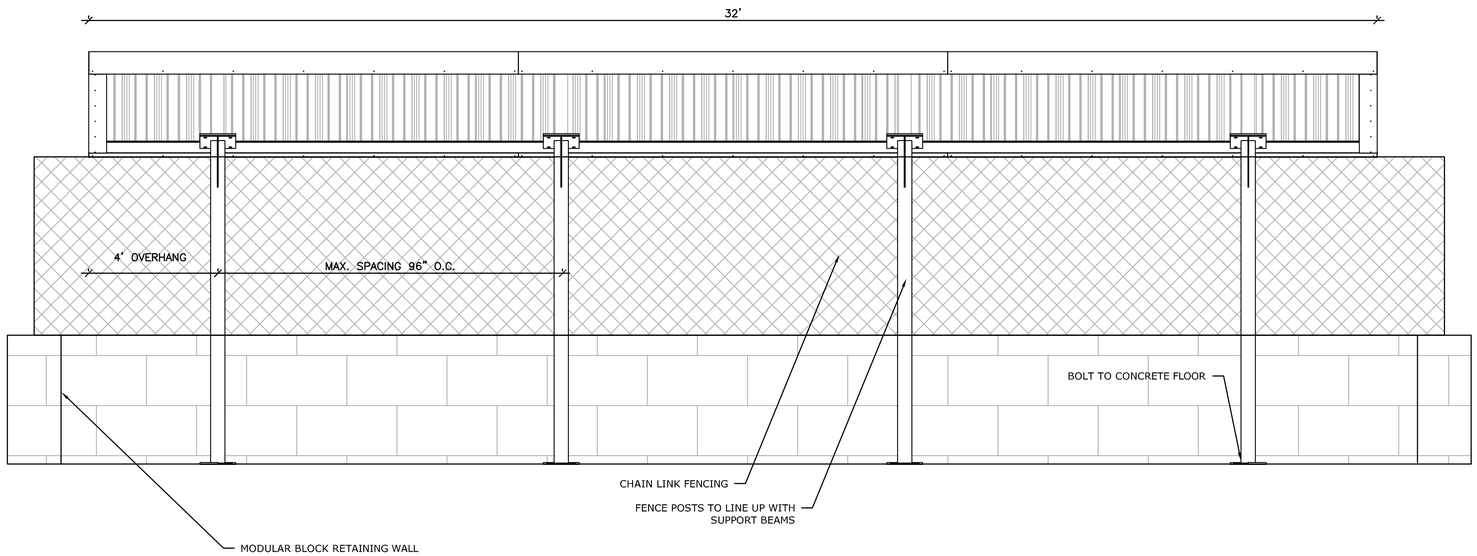

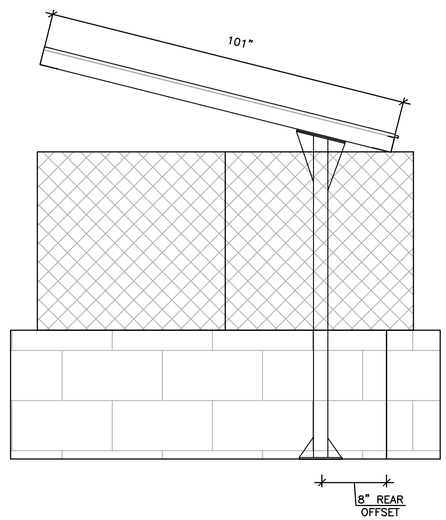

DUGOUT DETAIL WITH CANTILEVER OVERHANG
NOT TO SCALE

MILONE & MACBROOM®
99 Realty Drive
Cheshire, Connecticut 06410
(203) 271-1773 Fax (203) 272-9733
www.milloneandmacbroom.com

DESCRIPTION	DATE	BY

SITE DETAILS

HAMDEN HIGH SCHOOL
BASEBALL / MULTIPURPOSE FIELD IMPROVEMENTS
2040 DIXWELL AVENUE
HAMDEN, CONNECTICUT

KCF	CEH	DJK
DESIGNED	DRAWN	CHECKED

SCALE: AS NOTED
DATE: MAY 11, 2016
PROJECT NO.: 1228-61
SHEET NO.: 20
SHEET NAME

Copyright Milone & MacBroom, Inc - 2015