BID REQUIREMENTS and CONDITIONS DOCUMENT

for the

FAIRVIEW CEMETERY WATER SYSTEM

BID NO. 3887

CITY OF NEW BRITAIN, CONNECTICUT

HONORABLE ERIN E. STEWART, MAYOR

JULY 2016

BID REQUIREMENTS and CONDITIONS DOCUMENT

TABLE OF CONTENTS

Title	Page
Invitation for Bids	IFB-1
Instructions to Bidders	ITB-1/10
Contract - Form of Agreement/Contract Bonds	CON-1/14
Equal Employment Opportunity Requirements	EEO-1/9
General Conditions	GC-1/33
Supplemental General Conditions	SGC-1/33

INVITATION FOR BIDS

The CITY OF NEW BRITAIN, acting through the City Purchasing Agent, will receive bids for the **FAIRVIEW CEMETERY WATER SYSTEM AND FAUCETS, Bid No. 3887**, **until 11 a.m. on the 28th day of July, 2016,** at the Office of the Purchasing Department, Room 401 - City Hall, 27 West Main Street, New Britain, CT. 06051, at which time all bids will be publicly opened and read aloud.

The scope of work generally consists of providing and installing a new water system with faucets at the Fairview Cemetery.

The Bid Documents and Plans may be downloaded from the City of New Britain's web site at http://bids.newbritainct.gov on or after **12:00 noon on the 6th day of July, 2016.** A complete set of the Bid Documents and Plans are on file at the Office of the Purchasing Dept., Room 401 - City Hall, for review only.

The City reserves the right to accept or reject any or all bids or any part of a bid presented, or to invite proposals as its interest may appear.

A pre-bid conference shall be held on the 21st day of July, 2016, 10 a.m. at Fairview Cemetery Office, 120 Smalley St., New Britain, CT, and attendance is strongly recommended.

Attention is called to the fact that not less than the minimum salaries and wages as set forth in the Bid Documents must be paid on this project; proper classification of workers as employees rather than as independent contractors must be made. Where one or more apprentices are employed, Contractor must participate in a state-certified apprenticeship program. The Contractor must ensure that employees and applicants for employment are not discriminated against because of their race, sex, religions, color or national origin. The Contractor must adhere to all relevant provisions of Section 46a-95 of the Connecticut General Statutes, and any other relevant laws and regulations regarding Affirmative Action.

The Contractor shall comply with the Copeland Anti-Kickback Act and Regulations of the Secretary of Labor (29 CFR, Part 3).

JACK PIEPER
PURCHASING AGENT

INSTRUCTIONS TO BIDDERS

1. RECEIPT AND OPENING OF BIDS

The City of New Britain, (herein called the "Owner"), invites bids on the form attached hereto, all blanks of which must be appropriately filled in. Bids will be received by the Owner at the Office of the Purchasing Agent, located in Room 401, City Hall, 27 West Main St., New Britain, Connecticut 06051, until **11 a.m. on the 28th day of July, 2016**, and then at said office publicly opened and read aloud. The envelopes containing the bids must be sealed, addressed to the City of New Britain at the aforementioned address and designated as Bids for the **FAIRVIEW CEMETERY WATER SYSTEM AND FAUCETS, Public Bid No. 3887.**

The Owner may consider informal any bid not prepared and submitted in accordance with provisions hereof and may waive any informalities in or reject any and all bids. Any bid may be withdrawn prior to the above scheduled time for the opening of bids or authorized postponement thereof. Any bid received after the time and date specified shall not be considered.

2. PREPARATION OF PROPOSAL

Proposals must be submitted on the prescribed forms included in the **Bid Proposal Submittal Package**, and any attachments as designated and necessary. All blank spaces must be filled in and all prompts answered. All responses shall be typewritten or hand printed in ink.

All bids must be completed on the **Form of Bid** included in the Bid Proposal Submittal Package, with the unit price for each item furnished in both words and figures, and the amount bid for each item furnished in figures. In addition, the total bid amount must be furnished in both words and figures. All prices and amounts shall be typewritten or hand printed in ink. The Bidder’s attention is directed to the eleven (11) stipulations set forth in the said Form of Bid and agreed to by the Bidder with his submittal of a bid for the subject project. All bids shall be subject to all requirements of the Bid Documents, including the Specifications, Drawings, any referenced documents, and these Instructions to Bidders. All bids must be regular in every respect and no interlineation, excisions or special conditions shall be made or included in the Bid Forms by the bidder.

Each bidder's proposal, including, completed in full, the Form of Bid, Bid Bond, Notarized Statement of Bidder's Qualifications, Certification(s) Regarding Equal Employment Opportunity, Certification of Non-segregated facilities, Prospective Vendor’s Residency and Tax Payment Certificate, Non Collusion Affidavit, Bid/Proposal Affidavit, Affirmation of Receipt of State Ethics Laws Summary, and any other specifications pages requiring vendor response shall be enclosed in envelopes (outer and inner), both of which shall be sealed and clearly labeled with the words **"Bid**

Proposal", the bid number, the bidder's name, and the date and time of Bid Opening, in order to guard against premature opening of the Bid.

Once bids have been received, analyzed and an apparent low bidder has been identified, the following forms must be completed by the apparent low bidder and returned to the City of New Britain for approval:

1. Contractor's Proposed Progress Chart
2. Certificate of Compliance with Connecticut General Statute Section 31-57b
3. Anticipated Source of Material, Form CON-83
4. Certificate of Insurance, Form CON-32
5. Disadvantaged Business Enterprise (DBE or SBE as required) Participation Approval Request

The Owner may consider as irregular any bid on which there is an alteration of or departure from the Bid Forms hereto attached and at its option may reject the same. The Owner reserves the right to reject any Bid submitted that is not in full compliance with these Instructions to Bidders as being not responsive. The Owner also reserves the right to reject the Bid of any Bidder it considers not responsible.

If the Contract is awarded, it will be awarded on the basis of the lowest bid and the selected Alternative and/or Optional Bid items, if any.

If forwarded by mail, the sealed envelope containing the proposal and marked as directed above, must be enclosed in another envelope addressed as specified in Article 1 of these Instructions to Bidders.

Erasures or other changes in the Bid Documents must be explained and noted over the signature of the Bidder.

3. BID DOCUMENTS

The Bid Documents for the Project shall consist of the following:

a) Bid Requirements and Conditions Document
b) Bid Proposal Submittal Document
c) Improvement Plans
d) Special Technical Specifications
e) New Britain Standard Specifications for Municipal Construction dated May 2008 available on the web under the Documents link at www.newbritainct.gov
f) Connecticut Department of Transportation Form 816 including the latest Supplements dated January 16 2016

4. QUALIFICATIONS OF BIDDER

The Owner may make such investigations as he deems necessary to determine the ability of the bidder to perform the work, and the bidder shall furnish to the Owner all such information and data for this purpose as the Owner may request. The Owner reserves the right to reject any and all bids if evidence submitted by or investigation of such bidder fails to satisfy the Owner that such bidder is properly qualified to carry out the obligations of the Contract and to complete the work contemplated therein.

To assist the Owner in assessing the Bidder's ability to successfully perform the work, the Bidder shall complete in full the Statement of Bidder's Qualifications (pages SBQ-1 through SBQ-8) included in the Bid Proposal Submittal Package.

5. DISQUALIFICATION OF BIDDERS

More than one proposal from an individual, partnership, firm or corporation, or any association under the same or different names, will not be considered. Reasonable ground for believing that any bidder is interested in more than one proposal for the work contemplated will cause the rejection of all proposals in which such bidder is interested. Any or all proposals will be rejected if there is reason for believing that collusion exists among bidders, and all participants in such collusion will not be considered in future proposals for the same work.

6. BID SECURITY OR GUARANTY

Each bid must be accompanied by a bid bond or by a certified check of the bidder in the amount of TEN percent (10%) of the total bid amount, payable to the City of New Britain.

Such bonds or checks will be returned to all bidders, with the exception of the three lowest bidders, within three days after the formal opening of bids, and the remaining checks, or bid bonds, will be returned to the three lowest bidders within 48 hours after the Owner and the accepted bidder have executed the contract, or if no contract has been so executed, within 90 days after the date of opening of bids, or upon demand of the bidder at any time thereafter, so long as he has not been notified of the acceptance of his bid.

The bid must also be accompanied by a letter from an approved bonding company satisfactory to the Owner stating that said bonding company will bond the Contractor for one hundred percent (100%) of his total bid amount if said bidder shall be awarded the Contract for this project.

7. POWER OF ATTORNEY

Attorneys in fact who sign bid bonds or contract bonds must file with each bond a certified copy of their power of attorney to sign said bonds.

8. CONFLICT OF INTEREST

"No member, officer, or employee of the OWNER, or its designees or agents, no member of the governing body of the locality in which the program is situated, and no other public official of such locality or localities who exercises any function or responsibilities with respect to the program during the tenure, or for one year thereafter, shall have any interest, direct or indirect, in any contract or subcontract, or the proceeds thereof, under the agreement. The Grantee shall incorporate, or cause to be incorporated, in all such contracts or subcontracts a provision prohibiting such interest pursuant to the purposes of this article.

9. CONDITIONS OF WORK

Each bidder is responsible to inform himself fully of the conditions relating to the construction and labor under which the work is to be performed. Failure to do so will not relieve a successful bidder of his obligation to furnish all material and labor necessary to carry out the provisions set forth in his bid. Insofar as possible, work shall be performed in such a manner as not to conflict with, or adversely affect other contractors or individuals routine performance of their duties, or otherwise affected by the work.

10. OBLIGATION OF BIDDER AND INSPECTION OF SITE

Prior to bid submittal, it is the responsibility of each bidder to visit the project site and verify and become familiar with existing site conditions and other site attributes which may affect performance of the proposed work. It is also the bidder's responsibility to understand and be thoroughly familiar with the terms, obligations and requirements of the improvement plans, specification, and all other Bid Documents, and of all applicable City, State and Federal laws, codes, regulations, and requirements, and to make due allowance in his bid for all contingencies. Submittal of a Bid Proposal shall be considered conclusive evidence that the bidder has met these responsibilities. The failure or omission of any Bidder to receive or examine any form, instrument or documents shall in no way relieve any bidder from any obligation in respect to his bid.

If any omissions, errors, or other inconsistencies are noticed in the Bid Documents, it is the responsibility of the bidder to call them to the attention of Owner prior to bid submittal.

11. ENFORCEMENT OF TERMS AND CONDITIONS

The bidders are notified that all terms and conditions of the Contract and these Bid Documents will be rigidly enforced.

12. ADDENDA AND INTERPRETATIONS

No interpretation of the meaning of the plans, specifications or other Bid Documents will be made to any bidder orally. Every request for such interpretation should be made in writing addressed to the Owner, and, to be given consideration, must be received at least ten days prior to the scheduled bid opening. Any and all such interpretations and any supplemental instructions will be in the form of written addenda to the Bid Documents which, if issued, will be posted on the City's web site for download by all prospective bidders not later than five days prior to the scheduled bid opening. Failure of any bidder to receive any such addendum or interpretation shall not relieve any bidder from any obligation under his bid as submitted. All addenda so issued shall become part of the Bid Documents.

13. WITHDRAWAL OF BIDS

The following procedure shall apply for withdrawal of bids. A bidder may withdraw the bid by submitting either a written or facsimile request of withdrawal to the owner. The request of withdrawal must be received by the owner before the scheduled bid opening and may be made by mail, facsimile or hand-delivery. The bid guarantee of any bidder withdrawing the bid in compliance with this section shall be returned.

14. REJECTION OF BIDS

A. The Owner may reject a bid if:

1. The bidder fails to furnish any of the information requested pursuant to Article 3A of these Instructions to Bidders;

2. The submitted Bid does not strictly conform to law or the requirements of the Bid Documents;

3. The submitted Bid is conditional or qualified;

4. The submitted Bid is determined, in the opinion of the Owner, to be unbalanced. An unbalanced bid is defined as a bid containing a unit price or lump sum amount for any item which is deemed unreasonable when considering the item by itself and not in conjunction with the bid as a whole or any other item, or items, contained therein.

5. The owner determines, by means of Article 3A of these Instructions to Bidders or any other appropriate means, the bidder to be not responsible, incompetent, or unqualified or incapable to perform the work specified.

B. The Owner, however, reserves the right to reject any or all bids, or part thereof, and to waive any informalities in a bid or the bidding process. The Owner also reserves the right to delete any of the bid items in total, or to reduce the quantity of the bid items, whenever it deems it is in the interest of the Owner to do so.

15. ACCEPTANCE AND AWARD OF CONTRACT

The Owner will accept one of the submitted bids on each contract, or will reject all bids on any or all contracts. Acceptance of the bid and Notice of Award will be in writing and signed the Owner or its designee, and mailed to the address designated in the successful bidder's proposal. The Notice shall contain information and instructions as to the time and place set for execution of the Contract. The successful bidder shall appear at the designated time and place to execute the Contract and furnish all bonds and certificates of insurance required.

16. METHOD OF AWARD - Lowest Responsible Bidder

Bids will be compared on the basis of the total sum of the unit price submitted by the bidder for each base bid item applied to the estimated quantity designated in the bid form for that item. Award will be made to the lowest responsible bidder, who shall be determined in accordance with and pursuant to Section 2-578 Items 1 through 12, inclusive, of the City of New Britain Code of Ordinances.

17. LIQUIDATED DAMAGES FOR FAILURE TO ENTER INTO CONTRACT

The successful bidder shall execute and deliver the contract and required bonds within 10 days after he has received notice of the acceptance of his bid. Failure or refusal to do so shall cause the bidder to forfeit to the Owner, as liquidated damages for such failure or refusal, the security deposited with his bid.

18. SECURITY FOR FAITHFUL PERFORMANCE

The bidder awarded the Contract shall, at the time of signing the Contract, submit an executed performance bond in the amount of 100% of the Contract amount conditioned upon the faithful performance of the Contract. Said performance bond shall be from a company or companies authorized to transact business in the State of Connecticut. The approved bonds shall also contain a labor and material bond for 100% of the Contract amount for the payment of all persons performing labor or furnishing materials in connection with this Contract.

19. SUBCONTRACTING

The successful bidder may utilize the services of specialty subcontractors on those portions of the work which, under normal contracting practices are performed by specialty subcontractors. The successful bidder shall not award any portion of the work

to a subcontractor without prior written approval of the Owner. The acceptance of any and all subcontractors shall reside with the Owner, and the Owner's decision shall be final. The successful bidder shall be fully responsible to the Owner for the performance, finished products, acts, and omissions of his subcontractors and persons directly or indirectly employed thereby.

The successful bidder shall cause appropriate provisions to be included in all subcontracts relative to this project to bind subcontractors to the provisions of the Contract and these Bid Documents as applicable to work performed by the subcontractor on this projects; and appropriate provisions to give the Owner the same powers and authority over any subcontractor as it has over the Contractor under the provisions of said documents.

20. WAGES AND SALARIES

Attention of the bidders is particularly called to the requirements concerning the payment of not less than the prevailing wage and salary rates as set forth by the State and Federal (if applicable) wage rates included in this Bid Requirements and Conditions Document (see the Table of Contents for location within the document), and the conditions of employment with respect to certain categories and classifications of employees included therein. CT Prevailing Wage Rates apply.

The rates of pay set forth are the minimum to be paid during the life of the Contract. It is therefore the responsibility of the bidders to inform themselves as to local labor conditions, such as the length of work day and work week, overtime compensation, health and welfare contributions, labor supply and prospective changes or adjustments of rates.

21. EQUAL EMPLOYMENT OPPORTUNITY

Attention of the bidders is called to the applicable State and Federal requirements for ensuring that employees and applicants for employment are not discriminated against because of their race, creed, color, or national origin.

22. EXECUTIVE ORDER No. 17

To comply with the Governor's Executive Order No. 17, the Contractor and any subcontractors holding a contract directly under the Contractor shall list all employment openings with the Connecticut State Employment Service. The Labor Commissioner may allow exceptions to listing of employment openings which the Contractor proposed to fill from within its organization with employees on the rolls of the Contractor on the date of publication of the invitation to bid, or the date on which the public announcement was published or promulgated advising of the program concerned.

23. LAWS AND REGULATIONS

The bidder's attention is directed to the fact that all applicable State and Municipal laws, rules, ordinances and regulations of all authorities having jurisdiction over construction work in the locality of the project shall apply to the contract throughout, and they are deemed to be included herein as if written out in full.

24. TIME FOR COMPLETION AND LIQUIDATED DAMAGES

See Contract and Form of Agreement.

25. APPROVALS

The Contractor shall be responsible for obtaining all the necessary permits and approvals from the City of New Britain and the State of Connecticut, as required to complete the work in accordance with the improvement plans and other Contract Documents. The Owner will assist within its means in the approval process. However, any delays to the Contractor or the project, or any actions against either due to failure to obtain the necessary approvals, or to do so in a timely manner, or due to the Contractors lack of knowledge of the necessary approvals or the approval process, remain solely the responsibility of the Contractor.

26. START OF CONSTRUCTION

The successful bidder agrees to commence construction within ten (10) calendar days after receipt of the Notice to Proceed from the Owner. The Notice to Proceed shall be sent by the Owner after execution and delivery of the Contract and required bonds in accordance with Article 7 of these Instructions to Bidders.

27. REFERENCE SPECIFICATIONS

A. The most recent edition of the "City of New Britain Standard Specifications for Municipal Construction" (also referred to as "Standard Specifications") is hereby made a part of these Bid Documents and the ensuing Contract by reference. Copies of the Standard Specifications are available for review and purchase from the New Britain Bureau of Engineering or on the web under the Documents Link at www.newbritainct.gov.

B. The State of Connecticut Department of Transportation "Standard Specifications for Roads, Bridges and Incidental Construction, Form 816" with latest Supplemental Specifications, (also referred to as "Form 816"), is hereby made a part of these Bid Documents and the ensuing Contract by reference. Copies of Form 816 are available for purchase from the

D.O.T., and copies are available for review at the New Britain Bureau of Engineering.

28. CONFLICTING PROVISIONS

In the event of conflicts or inconsistencies between separate provisions of these Bid Documents and/or the executed Contract, such conflicts shall be resolved by applying the following in decreasing order of precedence:

Contractual Matters	Technical Matters
1) Contract-Form of Agreement	1) Special Technical Specifications
2) Invitation to Bid	2) Contract Drawings
3) Instructions to Bidders	3) Reference Specifications
4) Special Provisions	
5) Supplemental General Conditions	
6) General Conditions	

29. SAFETY AND HEALTH REGULATIONS

These construction documents, and the joint and several phases of construction hereby contemplated are to be governed at all times, by applicable provisions of the federal law(s), including but not limited to, the latest amendments of the following:

(1) William-Steiger Occupational Safety and Health Act of 1970, Public Law 91-956;

(2) Part 1910 - Occupational Safety and Health Standards, Chapter SVII of Title 29, Code of Federal Regulations;

(3) Part 1926 (formerly Part 1518) - Safety and Health Regulations for Construction, Chapter XIII of Title 29, Code of Federal Regulations.

In the event of any inconsistencies between the above laws and regulations and the provisions of these documents, the laws and regulations shall prevail.

30. SALES TAX

The Owner is exempt from Connecticut State Sales and Use Taxes on materials and equipment to be incorporated in this work. The Contractor may purchase materials or supplies to be consumed in the performance of this contract without payment of tax and shall not include taxes in his Contract Price.

31. SOURCE OF MATERIALS

CT DOT Form CON-083, “Anticipated Source of Materials”, pages ASM-1 and ASM-2, of the Bid Proposal Submittal Document shall be completed in full by the apparent low bidder and submitted to the Engineer prior to Award of the Contract.

FORM OF AGREEMENT BETWEEN CONTRACTOR AND OWNER

THIS AGREEMENT, made the _____ day of _____

in the year **TWO THOUSAND AND SIXTEEN by and between THE CITY OF NEW BRITAIN, hereinafter called the "OWNER" and _____**

_____, hereinafter called the "CONTRACTOR".

WITNESSETH THAT, the Contractor and the Owner for the considerations hereinafter named agree as follows:

Article 1. SCOPE OF WORK-- The Contractor shall furnish all of the materials and perform all of the work shown on the drawings and described in the specifications prepared by the City of New Britain, "Engineer", as and in these Contract Documents entitled: **"FAIRVIEW CEMETERY WATER SYSTEM AND FAUCETS", Bid No. 3887,** as and in these Contract Documents entitled the "Project"; and shall do everything required by the Contract Documents as designated in Article 3 of this Agreement.

Article 2. THE CONTRACT PRICE-- The Owner will pay the Contractor for the performance of the Contract in current funds, for the total quantities of work performed at the unit prices stipulated in the Bid for the several respective items of work completed subject to additions and deductions as provided in the Section entitled "Changes in the Work" under the General Conditions."

Article 3. CONTRACT-- The executed contract documents shall consist of the following:

a. This Agreement
b. Addenda thereto:
No. __ date _____No. ___ date _____ No. ___ date

c. Bid Requirements and Conditions Document
d. Bid Proposal Submittal Document, as submitted by Contractor
e. Improvement Plans
f. Other Contract Drawings issued
g. Special Technical Specifications
h. New Britain Standard Specifications for Municipal Construction
i. Connecticut Department of Transportation Form 816

This Agreement, together with the other documents enumerated in this Article 3 and other documents, which are made part hereof by reference, forms the Contract between the parties hereto.

The Contractor and the Owner for themselves, their successors, executors and administrators and assigns hereby agree to the full performance of the covenants herein contained.

Article 4. NOTICE TO PROCEED, TIME OF COMPLETION, AND LIQUIDATED DAMAGES:--The Contractor shall agree to commence work within ten (10) calendar days after receipt of the "Notice to Proceed" from the Owner. Such Notice may be sent after execution of this Agreement (also referred to herein as the "Contract").

The Contractor shall agree to complete the work within 90 days from receipt of the Notice to Proceed. The date of completion shall be known as the "Date of Substantial Completion" when all construction is sufficiently complete in accordance with the Contract Documents, so the owner can occupy or utilize the work or designated portion thereof for the use which it is intended, and the work is properly finished to provide the appearance intended, and the Certificate of Completion is issued by the Owner to the Contractor.

The Contractor shall prosecute the work continuously until completion. The rate of progress for any given Phase shall be at least that shown on the “Schedule of Progress” which is to be submitted to the Engineer by the Contractor in a form satisfactory to the Engineer prior to execution of this Agreement.

In general, work shall be prosecuted continuously throughout the term of the Contract, excluding the winter season, December 1st through March 31st. The Contractor will be expected to keep work going whenever possible. The Engineer will determine when conditions are unfavorable for work, or for any portion thereof, and may order that work be suspended on any part or all portions of the Contract whenever, in his opinion, the conditions are not such as will insure first class work.

The Contractor shall further agree that the Date of Completion of the Project Work is a reasonable time for completion of the work contemplated in accordance with the Improvement Plans, Specifications, and other Contract Documents, taking into consideration average weather conditions, availability of labor and delivery of materials and equipment.

If the Contractor neglects, fails or refuses to substantially complete the Project Work within the Time of Completion as specified herein, or any proper extension granted thereto by the Owner in accordance with the General Conditions, then the Contractor shall agree, as part consideration for the award of this Contract, to pay to the Owner a liquidated damage for breach of contract for **each and every calendar day** that the Contractor shall be in default on the subject Phase. This is not to be construed in any sense as a penalty.

Where actual damages for any delay in substantial completion of a Phase are impossible to determine by reason of the Owner's election not to terminate the right of the Contractor to proceed, the Contractor and his sureties shall be liable for, and shall pay to the Owner, the sum of **450 Dollars ($450.00)**, as fixed, agreed, and

liquidated damages for **each calendar day** of such delay until the work is substantially completed and accepted.

The Owner, however, may accept the work if there has been such a degree of completion as will, in the Owner's opinion, make the project reasonably safe, fit, and convenient for the use and accommodation for which it was intended. In such case, the Contractor shall not be charged with liquidated damages, but the Owner may assess the actual damages by such delay.

Article 5. GUARANTEE:-- The Contractor guarantees the work done under this contract and the materials furnished by him and used in the work are free from defects, and the guarantee is for a term of **one year** from and after the date of the **Certificate of Project Completion**. It is agreed and understood that the Contractor will at any time during this one year period, upon notification in writing from the Engineer, and without expense to the Owner, immediately execute all repairs which may be necessitated, as determined by the Engineer, by reason of any defective materials used therein, or by defective workmanship, or by reason of the normal use or functioning of all facilities constructed under this contract.

The Owner reserves the right to retain up to five percent (5%) of the Total Contract Price, or to accept, at the Owner's option, a Guarantee Bond for up to five percent (5%) of the Total Contract Price, and to hold such retainage or bond for the duration of the guarantee period. Upon expiration of the guarantee period, provided that all work is in good order, the Contractor shall be entitled to receive said retainage or, if posted, the release of the Guarantee Bond.

Article 6. PREVAILING WAGE RATES: Prevailing Wage Rates do apply for this project. The Contractor will submit weekly a copy of all payrolls to the Owner. The copy shall be accompanied by a statement signed by the Owner or his agent indicating that the payrolls are correct and complete, that the wage rates contained therein are not less than those determined by the Connecticut Department of Labor and that the Owner’s prevailing wage rates for this project in accordance with the specifications, conditions, and bid terms of Bid #3887.

Article 7. INSURANCE COVERAGE: The Contractor shall agree to maintain in force at all times during which services are to be performed the following coverages placed with company(ies) licensed by the State of Connecticut which have at least an “A-VIII” policyholders’ rating according to BEST Publications latest edition Key Rating Guide:

Commercial General Liability:	General Aggregate	$ 2,000,000
	Prod./Compl. Operations Aggregate	$ 2,000,000
	Occ. Aggregate	$ 1,000,000
Automobile	Liability Limit	$ 1,000,000

Liability:

Umbrella (Excess Liability)	Each Occurrence	$1,000,000
	Aggregate	$1,000,000
Workers' Comp. And Employer's Liability:	WC Statutory Limits	
	EL Each Accident	$500,000
	EL Disease Each Employee	$500,000
	EL Disease Policy Limit	$500,000

The City of New Britain and Consolidated School District" shall be named as "Additional Insured", and the Contractor agrees to provide replacement/renewal certificate at least 60 days prior to the expiration of the policy. Should any of the described policies be cancelled before the expiration date, written notice must be made to the City 30 days prior to cancellation.

The Contractor agrees to provide a certificate of insurance at the time of the execution of this contract as was as a replacement/renewal certificate at least 60 days prior to the expiration of the policy. Should any of the above-described policies be cancelled before the expiration date, written notice must be made to the City 30 days prior to cancellation. The Contractor shall name the City as Additional Insured on all insurance policies, except Workers Compensation and to provide a Waiver of Subrogation on all policies.

If any policy is written on a "Claims Made" basis, the policy must be continually renewed for a minimum of two (2) years from the completion date of this contract. If the policy is replaced and/or the retroactive date changed, then the expiring policy must be endorsed to extend the reporting period for claims for the policy in effect during the contract for two (2) years from the completion date.

Contractor covenants and agrees to hold the City harmless and to indemnify the City from (I) any and all claims arising from the performance of service enumerated herein, or any work or thing whatsoever done, or any condition created (other than by the City)during the term of this contract or any extensions thereof, but only to the extent caused by the negligent or otherwise wrongful act or omission of Contractor, its agent, employees, contractors or licensees and (II) all costs, expenses, liabilities incurred in or in connection with each such claim or action or proceeding brought thereon. In case an action or proceeding be brought against the City by reason of any such claim, Contractor, upon notice from the City, shall resist and defend such action claim or proceeding.

Article 8. HOLD HARMLESS AGREEMENT:--The Contractor, its agents and assigns shall indemnify and hold harmless the City of New Britain, including but not limited to, its elected officials, its officers, and agents, ("the City") from any and all claims made against the City,

including but not limited to, damages, awards, costs and reasonable attorneys fees, to the extent any such claim directly and proximately results from the wrongful willful or negligent performance of services by the Contractor during the Contractor's performance of this Agreement or any other Agreements of the Contractor entered into by reason thereof. The City agrees to give the Contractor prompt notice of any such claim and absent a conflict of interest, an opportunity to control the defense thereof.

This Agreement shall be binding on and inure to the benefit of the parties hereto and to their respective successors and assigns.

Article 9. Any reference to this Agreement shall be by number. The number assigned to this Agreement shall be #3887.

This Agreement was entered into pursuant to approval of the City of New Britain's Common Council, on _ _____, Resolution No._____ and approved by the Mayor.

IN WITNESS WHEREOF, the parties hereto have executed this Agreement on the date first above written.

This Agreement shall be binding on and inure to the benefit of the parties hereto and to their respective successors and assigns.

OWNER: CITY OF NEW BRITAIN

BY: _____
Jack Pieper
Purchasing Agent

Signed in the presence of: _____

CONTRACTOR: _____

BY: _____

Signed in the presence of: _____

ACKNOWLEDGMENT OF PRINCIPAL, (IF A CORPORATION)

STATE OF _____)
) ss.
COUNTY OF _____)

On this _____ day of _____, _____, before me, personally came and appeared _____ to me known, who, being by me duly sworn, did depose and say that he is the _____ of _____ the corporation described in and which executed the foregoing instrument; that he knows the seal of said corporation: that one of the impressions affixed to said instrument is an impression of such seal: that it was so affixed by order of the director of said corporation, and that he signed his name thereto by like order.

SEAL

ACKNOWLEDGMENT OF PRINCIPAL, (IF A PARTNERSHIP)

STATE OF _____)
) ss.
COUNTY OF _____)

On this _____ day of _____, _____, before me, personally came and appeared _____ to me known and known to me to be one of the members of the firm of _____ described in and who executed the foregoing instrument and he acknowledged to me that he executed the same as and for the act and deed of said firm.

SEAL

ACKNOWLEDGMENT OF PRINCIPAL, (IF AN INDIVIDUAL)

STATE OF _____)
) ss.
COUNTY OF _____)

On this _____ day of _____, _____, before me, personally came and appeared _____ to me known and known to me to be the person described in and who executed the foregoing instrument and acknowledged that he executed the same.

SEAL

CERTIFICATE OF CONTRACTOR'S ATTORNEY

I, the undersigned _____ the duly authorized and acting legal representative of

_____, do hereby certify as follows:

I have examined the attached contract(s) and surety bonds and the manner of execution thereof, and I am of the opinion that each of the aforesaid agreements has been duly executed by the proper parties thereto acting through their duly authorized representatives: that said representatives have full power and authority to execute said agreements on behalf of the respective parties name thereon: and that the foregoing agreements constitute valid and legally binding obligations upon the parties executing the same in accordance with terms, conditions and provisions thereof.

BY:_____
Attorney-in-fact

Law Firm: _____

Address – Zip Code: _____

_____

Date: _____

PERFORMANCE PAYMENT BOND

KNOW ALL MEN BY THESE PRESENTS: That we _____

_____ a _____,
Contractor) (Corporation, Partnership or Individual)

hereinafter called "PRINCIPAL" and _____
(Surety)

of _____, State of _____

hereinafter called the "SURETY", are held and firmly bound unto CITY OF NEW BRITAIN, hereinafter called "OWNER" in the penal sum of

_____ ____ _____ Dollars

($_____ _____ _____) in lawful money of the United States, for the payment of which sum well and truly to be made we bind ourselves, our heirs, executors, administrators and successors jointly and severally, firmly by these presents.

THE CONDITION OF THIS OF THIS OBLIGATION is such that Whereas the Principal entered into a certain contract with the Owner, dated the day of _____, _____, copy of which is hereto attached and made a part hereof for the construction of the

FAIRVEW CEMETERY WATER SYSTEM AND FAUCETS
Bid No. 3887

NOW, THEREFORE, if the Principal shall well, truly and faithfully perform its duties, all the undertakings, covenants, terms, conditions and agreements of said contract during the original term thereof, and any extensions thereof which may be granted by the Owner, with or without notice to the Surety, and if he shall satisfy all claims and demands incurred under such contract and shall fully indemnify and save harmless the Owner from all costs and damages which it may suffer by reason of failure to do so, and shall reimburse and repay the Owner all outlay and expense which the Owner may incur in making good any default, and shall promptly make payment to all persons, firms subcontractors, and corporations furnishing materials for or performing labor in the prosecution of the work provided for in such contract, and any authorized extension or modification thereof, including all amounts due for materials, lubricants, oil, gasoline, coal and coke, repairs on machinery, equipment and tools, consumed or used in connection with the construction of such work, and all insurance premiums on said work, and for all labor, performed in such work whether by subcontractor or otherwise, then this obligation shall be void; otherwise to remain in full force and effect.

Provided, further, that the said Surety, for value received, hereby stipulates and agrees that no charge, extension of time, alteration or addition to the terms of the contract or to the work to be performed thereunder or the specifications accompanying the same shall in any way affect its obligation on this bond, and it does hereby waive notice of any such change, extensions of time alteration or addition to the terms of the contract or to the work or to the specifications.

PROVIDED FURTHER, that no final settlement between the Owner and the Contractor shall abridge the right of any beneficiary hereunder, whose claim may be unsatisfied.

IN WITNESS WHEREOF, this instrument is executed in three (3) counterparts, each one of which shall be deemed an original, this the _____ day of _____, _____.

ATTEST:

_____ Principal

(Principal) Secretary

BY:

(SEAL)

_____

(Address - Zip Code)

Witness as to Principal_____

(Address - Zip Code) _____

_____

ATTEST:

_____Surety

_____ BY:
(Surety) Secretary Attorney-in-fact

(SEAL)

_____(Address-Zip Code)

_____
Witness as to Surety

NOTE: Date of Bond must not be prior to date of Contract. If a Partnership, all partners should execute the bond.

_____(Address-Zip Code)

BOND NO.

LABOR AND MATERIAL PAYMENT BOND

Note: This bond is issued simultaneously with another Bond in favor of the Owner conditioned for the full and faithful performance of the Contract.

KNOW ALL MEN BY THESE PRESENTS:

That _____ ,

as Principal (hereinafter called Principal) and

_____ as surety (hereinafter called Surety)

are held and firmly bound unto THE CITY OF NEW BRITAIN as Obligee (hereinafter called Owner) for the use and benefit of claimants as

hereinbelow defined; in the amount of

_____ Dollars

($_____),

for the payment whereof Principal and Surety bind themselves, their heirs, executors, administrators, successors, and assigns, jointly and severally, firmly by these presents.

WHEREAS, principal has written agreement dated _____, entered into a Contract with Owner for the construction of

FAIRVEW CEMETERY WATER SYSTEM AND FAUCETS
Bid No. 3887

which Contract is by reference made a part hereof, and is hereinafter referred to as the Contract.

NOW, THEREFORE, the condition of this obligation is such that, if the said Principal shall promptly pay for all materials furnished the said Principal shall promptly pay for all materials furnished and labor supplied or performed in the prosecution of the work included in and under the aforesaid Contract, whether or not the material or labor enters into and becomes a component part of the real asset, then this obligation shall be null and void otherwise it shall remain and be in full force and effect.

PROVIDED, that any alterations which may be made in the terms of the Contract or in the work to be done under it, or the giving by the Obligee of any extension of time for the performance of the Contract, or any other forbearance on the part of either the Obligee or the Principal to the other shall not in any way release the Principal and the Surety or either or any of them, their heirs, executors, administrators, successors or assigns from their liability hereunder, notice to the surety of any such alterations, extension or forbearance being hereby waived.

Any party, whether a subcontractor or otherwise, who furnished materials or supplies or performs labor or services in the prosecution of the work under said Contract, and who is not paid therefor, may bring a suit on this bond in the name of the person suing, prosecute the same to a final judgment, and have execution thereon for such sum as may be justly due.

IN WITNESS WHEREOF, the above-bounded parties have executed this instrument under their several seals this _____ day of _____, _____, the name and corporate seal of each corporation partly being hereto affixed and these presents signed by its undersigned representative, pursuant to authority of its governing body.

In the presence of:

_____ _____ (SEAL)
(Individual Principal)

_____

_____ (SEAL)

_____

Attest: BY:

_____

_____

BY:

Affix Corporate Seal

ATTEST:

_____

_____

BY:
Affix Corporate Seal

Countersigned

by

*Attorney-in-Fact, State of

*Power-of-Attorney for person signing for Surety Company must be attached to Bond.

STANDARD FEDERAL EQUAL EMPLOYMENT OPPORTUNITY CONSTRUCTION CONTRACT SPECIFICATION EXECUTIVE ORDER 11246

1. The offerer's or Bidder's attention is called to the "Equal Opportunity Clause" and the "Standard Federal Equal Employment Opportunity Construction Contract Specifications" set forth herein.

2. The goals and timetables for minority and female participation, expressed in percentage terms for the Contractor's aggregate work force in each trade on all construction work in the covered area, are as follows:

Females	Minorities
6.9%	6.9%

These goals are applicable to all the Contractor's construction work (whether or not it is Federal or federally assisted) performed in the covered area.

The Contractor's compliance with the Executive Order and the regulations in 41 CFR Part 60-4 shall be based on its implementation of the Specific Affirmative Action Obligations required by the specifications set forth in 41 CFR 60-4.3(a), and its efforts to meet the goals established for the geographical area where the contract resulting from this solicitation is to be performed. The hours of minority and female employment and training must be substantially uniform throughout the length of the contract, and in each trade, and the contractor shall make a good faith effort to employ minorities and women evenly on each of its projects. The transfer of minority or female employees or trainees from Contractor to Contractor or from project to project for the sole purpose of meeting the Contractor's goals shall be a violation of the contract, the Executive Order and the regulations in 41 CFR Part 60-4. Compliance with the goals will be measured against the total work performed.

3. The Contractor shall provide written notification to the Director of the Office of Federal Contract Compliance programs within 10 working days of award of any construction subcontract in excess of $10,000 at any tier for construction work under the contract resulting from this solicitation. The notification shall list the name, address and telephone number of the subcontractor; employer identification number; estimated dollar amount of the subcontract; estimated starting and completion dates of the subcontract; and the geographical area in which the contract is to be performed.

4. As used in this Notice, and in the contract resulting from this solicitation, the "covered area" is

New Britain,	Hartford	Connecticut
(City)	(County)	(State)

ATTACHMENT B

The applicant agrees that it will incorporate or cause to be incorporated into any contract for construction work, or modification thereto, as defined in the regulations of the Secretary of Labor at 41 CFR Chapter 60, the following equal opportunity clause:

During the performance of this contract, the contractor agrees as follows:

(1) The contractor will not discriminate against any employee or applicant for employment because of race, color, religion, sex, or national origin. The Contractor will take affirmative action to ensure that applicants are employed, and that employees are treated during employment without regard to their race, color, religion, sex, or national origin. Such action shall include, but not be limited to the following: employment, upgrading, demotion, or transfer, recruitment or recruitment advertising, layoff or termination; rates of pay, or other forms of compensation; and selection for training, including apprenticeship. The contractor agrees to post in conspicuous places, available to employees and applicants for employment, notices to be provided setting forth the provisions of this nondiscrimination clause.

(2) The contractor will, in all solicitations or advertisements for employees placed by or on behalf of the contractor, state that all qualified applicants will receive consideration for employment without regard to race, color, religion, sex, or national origin.

(3) The contractor will send to each labor union or representative of workers with which he has a collective bargaining agreement or other contract or understanding, a notice to be provided advising the said labor union or workers representative of the contractors' commitments under this section and shall post copies of the notice in conspicuous places available to employees and applicants for employment.

(4) The contractor will comply with all provisions of Executive Order 11246 of September 24, 1965, and of the rules, regulations and relevant orders of the Secretary of Labor.

(5) The contractor will furnish all information and reports required by Executive Order 11246 of September 24, 1965, and by rules, regulations, and orders of the Secretary of Labor, or pursuant thereto, and will permit access to his books, records, and accounts by the administering agency and the Secretary of Labor for purposes to ascertain compliance with such rules, regulations and orders.

(6) In the event of the Contractor's noncompliance with the nondiscrimination clauses of this contract or with any of the said rules, regulations, or orders, this contract may be canceled, terminated, or suspended in whole or in part and the contractor may be declared ineligible for further government construction contracts in accordance with procedures authorized in Executive Order 11246 of September 24, 1965, and such other sanctions may be imposed and remedies invoked as provided in Executive Order 11246 of September 24, 1965, or by rule, regulation, or order of the Secretary of Labor, or as otherwise provided by law.

(7) The Contractor will include the portion of the sentence immediately preceding paragraph (1) and the provisions of paragraphs (1) through (7) in every subcontract or purchase order unless exempted by rules, regulations, or orders of the Secretary of Labor issued pursuant to section 204 of Executive Order 11246 of September 24, 1965, so that such provisions will be binding upon each subcontractor or vendor. The contractor will take such action with respect to any subcontract or purchase order as the administering agency may direct as a means of enforcing such provisions, including sanctions for non-compliance: Provided however, that in the event a contractor becomes involved in, or is threatened with litigation with a subcontractor or vendor as a result of such direction by the administering agency, the contractor may request the City to enter into such litigation to protect the interests of the City.

The Contractor is further instructed that any prohibition against discrimination on the basis of age under the Age Discrimination Act of 1975 or with respect to an otherwise qualified handicapped individual as provided in Section 504 of the Rehabilitation Act of 1973 shall also apply to this contract.

The applicant further agrees that it will be bound by the above equal opportunity clause with respect to its own employment practices when it participates in construction work: Provided that if the applicant so participating is a State or local government the above equal opportunity clause is not applicable to any agency, instrumentality or subdivision of such government which does not participate in work on or under the contract.

The applicant agrees that it will assist and cooperate actively with the administering agency and the Secretary of Labor in obtaining the compliance of contractors and subcontractors with the equal opportunity clause and the rules, regulations, and relevant orders of the Secretary of Labor, that it will furnish the administering agency and the Secretary of Labor such information as they may require for the supervision of such compliance, and that it will otherwise assist the administering agency in the discharge of the agency's primary responsibilities for securing compliance.

The applicant further agrees that it will refrain from entering into any contract or contract modification subject to Executive Order 11246 of September 24, 1965, with a contractor debarred from, or who has not demonstrated eligibility for, Government assisted construction contracts pursuant to the Executive order and will carry out such sanctions and penalties for violation of the equal opportunity clause as may be imposed upon contractors and subcontractors by the administering agency or the Secretary of Labor pursuant to Part II, Subpart D of the executive order. In addition, the applicant agrees that if it fails or refuses to comply with these undertakings, the administering agency may take any or all of the following actions: cancel, terminate, or suspend in whole or in part this grant (contract, loan, insurance, guarantee): refrain from extending any further assistance to the applicant under the program with respect to which the failure or refund occurred until satisfactory assurance of future compliance has been received from such applicant; and refer the case to the Department of Justice for appropriate legal proceedings.

ATTACHMENT C

Standard Federal Equal Employment Opportunity Construction Specifications
(Executive Order 11246)

1. As used in these specifications:

a. "Covered area" means the geographical area described in the solicitation from which this contract resulted:

b. "Director" means director, Office of Federal Contract Compliance Programs, United States Department of Labor, or any person to whom the Director delegates authority.

c. "Employer identification number" means the Federal Social Security number used on the Employers Quarterly Federal Tax Return, U.S. Treasury Department Form 941.

d. "Minority" includes:

1. Black (all persons having origins in any of the Black African racial groups not of Hispanic origin);

2. Hispanic (all persons of Mexican, Puerto Rican, Cuban, Central or South American or other Spanish Culture or origin, regardless of race);

3. Asian and Pacific Islander (all persons having origins in any of the original peoples of the Far East, Southeast Asia, the Indian Subcontinent, or the Pacific Islands);

4. American Indian or Alaskan Native; (all persons having origins in any of the original peoples of North America and Maintaining identifiable tribal affiliations through membership and participation or community identification).

5. Portuguese (all persons of Portuguese, Brazilian or other Portuguese culture or origin regardless of race).

2. Whenever the Contractor, or any Subcontractor at any tier, subcontracts a portion of the work involving any construction trade, it shall physically include in each subcontract in excess of $10,000 the provisions of these specifications and the Notice which contains the applicable goals for minority and female participation and which is set forth in the solicitations from which the contract resulted.

3. If the Contractor is participating (pursuant to 41 CFR 60-4.5) in a Hometown Plan approved by the U.S. Department of Labor in the covered area either individually or through an association, its affirmative action obligations on all work in the Plan area

(including goals and timetables) shall be in accordance with that Plan for those trades which have unions participating in the Plan. Contractors must be able to demonstrate their participation in and compliance with the provisions of any such Hometown Plan. Each Contractor or Subcontractor participating in an approved plan is individually required to comply with its obligations under the EEO clauses, and to make a good faith effort to achieve each goal under the Plan in each trade in which it has employees. The overall good faith performance by other contractors or subcontractors toward a goal in an approved Plan does not excuse any covered contractor's or subcontractor's failure to make good faith efforts to achieve the plan goals and timetables.

4. The Contractor shall implement the specific affirmative action standards provided in paragraphs 7a through p of these specifications. The goals set forth in the solicitation from which this contract resulted are expressed as percentages of the total hours of employment and training of minority and female utilization the contract should reasonably be able to achieve in each construction trade in which it has employees in the covered area. The Contractor is expected to make substantially uniform progress toward the goals in each craft during the period specified.

5. Neither the provisions of any collective bargaining agreement, nor the failure by a union with whom the Contractor has a collective bargaining agreement, to refer either minorities or women shall excuse the Contractor's obligations under these specifications, Executive Order 11246, or the regulations promulgated pursuant thereto.

6. In order for the nonworking training hours of apprentices and trainees to be counted in meeting the goals, such apprentices and trainees must be employed by the Contractor during the training period, and the Contractor must have made a commitment to employ the apprentices and trainees at the completion of their training, subject to the availability of employment opportunities. Trainees must be trained pursuant to training programs approved by the U.S. Department of Labor.

7. The Contractor shall take specific affirmative actions to ensure equal employment opportunity. The evaluation of the Contractor's compliance with these specifications shall be based upon its effort to achieve maximum results from its actions. The Contractor shall document these efforts fully, and shall implement affirmative action steps at least as extensive as the following:

a. Ensure and maintain a working environment free of harassment, intimidation, and coercion at all sites, and in all facilities at which the Contractor's employees are assigned to work. The Contractor, where possible, will assign two or more women to each construction project. The Contractor shall specifically ensure that all foremen, superintendents, and other onsite supervisory personnel are aware of and carry out the Contractor's obligation to maintain such a working environment, with specific attention to minority or female individuals working at such sites or in such facilities.

b. Establish and maintain a current list of minority and female recruitment sources, provide written notification to minority and female recruitment sources and to community organizations when the Contractor or its unions have employment opportunities available, and maintain a record of the organization's responses.

c. Maintain a current file of the names, addresses and telephone numbers of each minority and female off-the-street applicant and minority or female referral from a union, a recruitment source or community organization and of what action was taken with respect to each such individual. If such individual was sent to the union hiring hall for referral and was not referred back to the Contractor by the union or, if referred, not employed by the Contractor, this shall be documented in the file with the reason therefore, along with whatever additional actions the Contractor may have taken.

d. Provide immediate written notification to the Director when the union or unions with which the Contractor has a collective bargaining agreement has not referred to the Contractor a minority person or woman sent by the Contractor, or when the Contractor has other information that the union referral process has impeded the Contractor's efforts to meet its obligations.

e. Develop on-the-job training opportunity and/or participate in training programs for the area which expressly include minorities and women, including upgrading programs and apprenticeship and trainee programs relevant to the Contractor's employment needs, especially those programs funded or approved by the Department of Labor. The Contractor shall provide notice of these programs to the sources compiled under 7b above.

f. Disseminate the Contractor's EEO policy by providing notice of the policy to unions and training programs and requesting their cooperation in assisting the Contractor in meeting its EEO obligations; by including it in any policy manual and collective bargaining agreement; by publicizing it in the company newspaper, annual report, etc. by specific review of the policy with all management personnel and with all minority and female employees at least once a year, and by posting the company EEO policy on bulletin board accessible to all employees at each location where construction work is performed.

g. Review, at least annually, the company's EEO policy and affirmative action obligations under these specifications with all employees having any responsibility for hiring, assignment, layoff, termination or other employment decisions including specific review of these terms with on site supervisory personnel such as Superintendents, General Foremen, etc., prior to the initiation of construction work at any job site. A written record shall be made and maintained identifying the time and place of these meetings, persons attending, subject matter discussed, and disposition of the subject matter.

h. Disseminate the Contractor's EEO policy externally by including it in any advertising in the news media, specifically including minority and female news media, and providing written notification to and discussing the Contractor's EEO policy with contractors and Subcontractors with whom the Contractor anticipates doing business.

i. Direct its recruitment efforts, both oral and written, to minority, female and community organizations, to schools with minority and female students and to minority and female recruitment area and employment needs. Not later than one month prior to the date for the acceptance of applications for apprenticeship or other training by any

recruitment source, the Contractor shall send written notification to organizations such as the above, describing the openings, screening procedures, and tests to be used in the selection process.

j. Encourage present minority and female employees to recruit other minority persons and women and, where reasonable, provide after school, summer and vacation employment to minority and female youth both on the site and in other areas of a Contractor's workforce.

k. Validate all tests and other selection requirements where there is an obligation to do so under 41 CFR Part 60-3.

l. Conduct, at least annually, an inventory and evaluation at least of all minority and female personnel for promotional opportunities and encourage these employees to seek or to prepare for, through appropriate training, etc., such opportunities.

m. Ensure that seniority practices, job classifications, work assignments and other personnel practices, do not have a discriminatory effect by continually monitoring all personnel and employment related activities to ensure that the EEO policy and the Contractor's obligations under these specifications are being carried out.

n. Ensure that all facilities and company activities are nonsegregated except that separate or single-user toilet and necessary changing facilities shall be provided to assure privacy between the sexes.

o. Document and maintain a record of all solicitations of offers for subcontract from minority and female construction contractors and suppliers, including circulation of solicitations to minority and female contractor associations and other business associations.

p. Conduct a review, at least annually, of all supervisors' adherence to and performance under the Contractor's EEO policies and affirmative action obligations.

8. Contractors are encouraged to participate in voluntary associations which assist in fulfilling one or more of their affirmative action obligations (7a through p). The efforts of a contractor association, joint contractor union, contractor community, or other similar group of which the contractor is a member and participant, may be asserted as fulfilling any one or more of its obligations under 7a through p of these Specifications provided that the contractor actively participated in the group, makes every effort to assure that the group has a positive impact on the employment of minorities and women in the industry, ensures that the concrete benefits of the program are reflected in the Contractor's minority and female work-force participation, makes a good faith effort to meet its individual goals and timetables, and can provide access to documentation which demonstrates the effectiveness of actions taken on behalf of the Contractor. The obligation to comply, however, is the Contractor's and failure of such a group to fulfill an obligation shall not be a defense for the Contractor's non-compliance.

9. A single goal for minorities and a separate single goal for women have been established. The Contractor, however, is required to provide equal employment

opportunity and to take affirmative action for all minority groups, both male and female, and all women, both minority and non-minority. Consequently, the contract may be in violation of the Executive Order if a particular group is employed in a substantially disparate manner (for example, even though the Contractor has achieved its goals for women generally, the Contractor may be in violation of the Executive Order if a specific minority group of women is under utilized.

10. The Contractor shall not use the goals and timetables or affirmative action standards to discriminate against any person because of race, color, religion, sex, or national origin.

11. The Contractor shall not enter into any Subcontract with any person or firm debarred from Government contracts pursuant to Executive Order 11246.

12. The Contractor shall carry out such sanctions and penalties for violation of these specifications and of the Equal Opportunity Clause, including suspension, termination and cancellation of existing subcontracts as may be imposed or ordered pursuant to Executive Order 11246, as amended, and its implementing regulations, by the Office of Federal Contract Compliance Programs. Any Contractor who fails to carry out such sanctions and penalties shall be in violation of these specifications and Executive Order 11246, as amended.

13. The Contractor, in fulfilling its obligations under these specifications, shall implement specific affirmative action steps, at least as extensive as those standards prescribed in paragraph 7 of these specifications, so as to achieve maximum results from its efforts to ensure equal employment opportunity. If the Contractor fails to comply with the requirements of the Executive Order, the implementing regulations, of these specifications, the Director shall proceed in accordance with 41 CFR 60-4.8.

14. The Contractor shall designate a responsible official to monitor all employment related activity to ensure that the company EEO policy is being carried out, to submit reports relating to the provisions hereof as may be required by the Government and to keep records. Records shall at least include for each employee the name, address, telephone numbers, construction trade, union affiliation, if any, employee identification number when assigned, social security number, race, sex, status (e.g. mechanic, apprentice, trainee, helper, or laborer), dates of changes in status, hours worked per week in the indicated trade, rate of pay, and locations at which the work was performed. Records shall be maintained in an easily understandable form; however, to the degree that existing records satisfy this requirement, contractors shall not be required to maintain separate records.

15. Nothing herein provided shall be construed as a limitation upon the application of other laws which establish different standards of compliance or upon the application of requirements for the hiring of local or other area residents (e.g. those under the Public Works Employment Act of 1977 and the Community Development Block Grant Program).

City of New Britain

General Conditions (Rev. 9/20/02)

Table of Contents*

1. Contract and Contract Documents
2. Definitions
3. Additional Instructions and Detail Drawings
4. Shop or Setting Drawings
5. Materials, Services, and Facilities
6. Contractor's Title to Materials
7. Inspection and Testing of Materials
8. "Or Equal" Clause
9. Patents
10. Surveys, Permits and Regulations
11. Contractor's Obligations
12. Weather Conditions
13. Protection of Work and Property-Emergency
14. Inspection
15. Reports, Records, and Data
16. Superintendence by Contractor
17. Changes
18. Disputes
19. Arbitration and Litigation
20. Time for Completion and Liquidated Damages
21. Correction of Work
22. Subsurface Conditions Found Different
23. Right of Owner to Terminate Contract
24. Construction Schedule and Periodic Estimates
25. Payments to Contractor
26. Acceptance of Final Payment Constitutes Release
27. Payments by Contractor
28. Insurance
29. Contract Security Documents
30. Additional or Substitute Bond
31. Assignments
32. Mutual Responsibility of Contractors
33. Separate Contract
34. Subcontracting
35. Architect/Engineer's Authority
36. Stated Allowances
37. Use of Premises and Removal of Debris
38. Quantities of Estimate
39. Lands and Rights of Way
40. General Guaranty
41. Notice and Service Thereof
42. Provisions Required By Law Deemed Inserted
43. Protection of Lives and Health
44. Subcontracts
45. Equal Employment Opportunity
46. Interest of Members of or Delegates to Congress

47. Other Prohibited Interest
48. Use and Occupancy Prior to Owner's Acceptance
49. Photographs
50. Suspension of Work
51. Minimum Wages
52. Withholding of Payments
53. Payrolls and Basic Records
54. Apprentices
55. Compliance with Copeland Anti-Kickback Act and Regulations
56. Overtime
57. Signs
58. Employment Practices
59. Contract Termination; Debarment
60. Termination for Convenience of the Owner
61. Ordinance Compliance

*See alphabetical index at end

1. Contract and Contract Documents

The Plans, Specifications and Addenda, hereinafter enumerated in Paragraph 1 of the Supplemental General Conditions, shall form part of this Contract; and the provisions thereof shall be as binding upon the parties hereto as if they were herein fully set forth. The table of contents, titles, headings, running headlines and marginal notes contained herein and in said documents is solely to facilitate reference to various provisions of the Contract Documents and in no way affect, limit or cast light on the interpretation of the provisions to which they refer.

2. Definitions

The following terms as used in this contract are respectively defined as follows:

(a) "Contractor": A person, firm or corporation with whom the contract is made by the Owner.

(b) "Subcontractor": A person, firm or corporation supplying labor and materials or only labor for work at the site of the project for, and under separate contract or agreement with, the Contractor.

(c) "Work on (at) the project": Work to be performed at the location of the project including the transportation of materials and supplies to or from the location of the project, by employees of the Contractor and any Subcontractor.

3. Additional Instructions and Detail Drawings

The Contractor will be furnished additional instructions and detail drawings as necessary to carry out the work included in the contract. The additional drawings and instructions thus supplied to the Contractor will coordinate with the Contract Documents and will be so prepared that they can be reasonably interpreted as part thereof. The Contractor shall carry out the work in accordance with the additional detail drawings and instructions. The Contractor and the Architect/Engineer will prepare jointly (a) a schedule, fixing the dates at which special detail drawings will be required, such drawings, if any, to be furnished by the Architect/Engineer in accordance with said schedule, and (b) a schedule fixing the respective dates for the submission of shop drawings, the beginning of manufacture, testing and installation of materials, supplies and equipment, and the completion of the various parts of the work; each such schedule to be subject to change from time to time in accordance with the progress of the work.

4. Shop or Setting Drawings

The Contractor shall submit promptly to the Architect/Engineer two copies of each shop or setting drawing prepared in accordance with the schedule predetermined as aforesaid. After examination of such drawings by the Architect/Engineer and the return thereof, the Contractor shall make such

corrections to the drawings as have been indicated and shall furnish the Architect/Engineer with two corrected copies. If requested by the Architect/Engineer the Contractor must furnish additional copies. Regardless of corrections made in or approval given to such drawings by the Architect/ Engineer, the Contractor will nevertheless be responsible for the accuracy of such drawings and for their conformity to the Plans and Specifications, unless he notifies the Architect/Engineer in writing of any deviations at the time he furnishes such drawings.

5. Materials, Services, and Facilities

(a) It is understood that except as otherwise specifically stated in the Contract Documents, the Contractor shall provide and pay for all material, labor, tools, equipment, water, light, power, transportation, superintendence, temporary construction of every nature, and all other services and facilities of every nature whatsoever necessary to execute, complete, and deliver the work within the specified time.

(b) Any work necessary to be performed after regular working hours, on Sundays or Legal Holidays, shall be performed without additional expense to the Owner.

6. Contractor's Title to Materials

No materials or supplies for the work shall be purchased by the Contractor or by any Sub-contractor subject to any chattel mortgage or under a conditional sale contract or other agreement by which an interest is retained by the seller. The Contractor warrants that he has good title to all materials and supplies used by him in the work, free from all liens, claims or encumbrances.

7. Inspection and Testing of Materials

(a) All materials and equipment used in the construction of the project shall be subject to adequate inspection and testing in accordance with accepted standards. The laboratory or inspection agency shall be selected by the Owner. The Owner will pay for all laboratory inspection service direct, and not as part of the contract.

(b) Materials of construction, particularly those upon which the strength and durability of the structure may depend, shall be subject to inspection and testing to establish conformance with specifications and suitability for uses intended.

8. "Or Equal" Clause

Whenever a material, article or piece of equipment is identified on the plans or in the specifications by reference to manufacturers' or vendors' names, trade

names, catalogue numbers, etc., it is intended merely to establish a standard; and, any material, article, or equipment of other manufacturers and vendors which will perform adequately the duties imposed by the general design will be considered equally acceptable, provided the material, article, or equipment so proposed, is, in the opinion of the Architect/Engineer, of equal substance and function. It shall not be purchased or installed by the contractor without the Architect/Engineer's written approval.

9. Patents

(a) The Contractor shall hold and save the Owner and its officers, agents, servants, and employees harmless from liability of any nature or kind, including cost and expenses for, or on account of, any patented or unpatented invention, process, article, or appliance manufactured or used in the performance of the contract, including its use by the Owner, unless otherwise specifically stipulated in the Contract Documents.

(b) License or Royalty Fees: License and/or Royalty Fees for the use of a process which is authorized by the Owner of the project must be reasonable, and paid to the holder of the patent, or his authorized licensee, direct by the Owner and not by or through the Contractor.

(c) If the contractor uses any design, devise or materials covered by letters, patent, or copyright, he shall provide for such use by suitable agreement with the Owner of such patented or copyrighted design, devise or materials, it is mutually agreed and understood that, without exception, the contract prices shall include all royalties or cost arising from the use of such design, device or materials, in any way involved in the work. The Contractor and/or his Sureties shall indemnify and save harmless the Owner of the project from any and all claims for infringement by reason of the use of such patented or copyrighted design, device or materials or any trademark or copyright in connection with work agreed to be performed under this contract, and shall indemnify the Owner for any cost, expense or damage which it may be obliged to pay by reason of such infringement at any time during the prosecution of the work or after completion of the work.

10. Surveys, Permits, and Regulations

Unless otherwise expressly provided for in the Specifications, the Owner will furnish to the Contractor all surveys necessary for the execution of the work.

The Contractor shall procure and pay all permits, licenses and approvals necessary for the execution of his contract.

The Contractor shall comply with all laws, ordinances, rules, orders, and regulations relating to performance of the work, the protection of adjacent property, and the maintenance of passage- ways, guard fences or other protective facilities.

11. Contractor's Obligations

The Contractor shall and will, in good workmanlike manner, do and perform all work and furnish all supplies and materials, machinery, equipment, facilities and means, except as herein otherwise expressly specified, necessary or proper to perform and complete all the work required by this contract, within the time herein specified, in accordance with the provisions of this contract and said specifications and in accordance with the plans and drawings covered by this contract any and all supplemental plans and drawings, and in accordance with the directions of the Architect/Engineer as given from time to time during the progress of the work. He shall furnish, erect, maintain, and remove such construction plant and such temporary works as may be required.

The Contractor shall observe, comply with, and be subject to all terms, conditions, requirements, and limitations of the contract and specifications, and shall do, carry on, and complete the entire work to the satisfaction of the Architect/Engineer and the Owner.

12. Weather Conditions

In the event of temporary suspension of work, or during inclement weather, or whenever the Architect/Engineer shall direct, the Contractor will, and will cause his subcontractors to protect carefully his and their work and materials against damage or injury from the weather. If, in the opinion of the Architect/ Engineer, any work or materials shall have been damaged or injured by reason of failure on the part of the Contractor or any of his Subcontractors so to protect his work, such materials shall be removed and replaced at the expense of the Contractor.

13. Protection of Work and Property--Emergency

The Contractor shall at all times safely guard the Owner's property from injury or loss in connection with this contract. He shall at all times safely guard and protect his own work, and that of adjacent property from damage. The Contractor shall replace or make good any such damage, loss or injury unless such be caused directly by errors contained in the contract or by the Owner, or his duly authorized representatives.

In case of an emergency which threatens loss or injury of property, and/or safety of life, the Contractor will be allowed to act, without previous instructions from the Architect/Engineer, in a diligent manner. He shall notify the Architect/Engineer immediately thereafter. Any claim for compensation by the Contractor due to

such extra work shall be promptly submitted to the Architect/Engineer for approval.

Where the Contractor has not taken action but has notified the Architect/Engineer of an emergency threatening injury to persons or damage to the work or any adjoining property, he shall act as instructed or authorized by the Architect/Engineer.

The amount of reimbursement claimed by the Contractor on account of any emergency action shall be determined in the manner provided in Paragraph 17 of the General Conditions.

14. Inspection

The authorized representatives of the Federal Highway Administration, the State of Connecticut, and the City of New Britain and its agents shall be permitted to inspect all work, materials, payrolls, records of personnel, invoices of materials, and other relevant data and records.

15. Reports, Records and Data

The Contractor shall submit to the Owner such schedule of quantities and costs, progress schedules, payrolls, reports, estimates, records and other data as the Owner may request concerning work performed or to be performed under this contract.

16. Superintendence by Contractor

At the site of the work the Contractor shall employ a construction superintendent or foreman who shall have full authority to act for the Contractor. It is understood that such representative shall be acceptable to the Architect/Engineer and shall be one who can be continued in that capacity for the particular job involved unless he ceases to be on the Contractor's payroll.

17. Changes (48 CFR Ch. 1 (Aug 1987)(10-1-90 Edition))

(a) The Owner may, at any time, without notice to the sureties, if any, by written order designated or indicated to be a change order, make changes in the work within the general scope of the contract, including changes -

(1) In the specifications (including drawings and designs);
(2) In the method or manner of performance of the work;
(3) In the Owner-furnished facilities, equipment, materials, services, or site; or
(4) Directing acceleration in the performance of the work.

(b) Any other written or oral order (which, as used in this paragraph (b), includes direction, instruction interpretation or determination) from the Owner that causes a change shall be treated as a change order under this clause; provided, that the Contractor gives the Owner written notice stating (1) the date, circumstances, and source of the order and (2) that the Contractor regards the order as a change order.

(c) Except as provided in this clause, no order, statement, or conduct of the Owner shall be treated as a change under this clause or entitle the Contractor to an equitable adjustment.

(d) If any change under this clause causes an increase or decrease in the Contractor's cost of, or the time required for, the performance of any part of the work under this contract, whether or not changed by any such order, the Owner shall make an equitable adjustment and modify the contract in writing. However, except for an adjustment based on defective specifications, no adjustment for any change under paragraph (b) of this clause shall be made for any costs incurred more than 20 days before the Contractor gives written notice as required. In the case of defective specifications for which the Owner is responsible, the equitable adjustment shall include any increased cost reasonably incurred by the Contractor in attempting to comply with the defective specifications.

(e) The Contractor must assert its right to an adjustment under this clause within 30 days after (1) receipt of a written change order under paragraph (a) of this clause or (2) the furnishing of a written notice under paragraph (b) of this clause, by submitting to the Owner a written statement describing the general nature and amount of proposal, unless this period is extended by the Owner. The statement of proposal for adjustment may be included in the notice under paragraph (b) above.

(f) No proposal by the Contractor for an equitable adjustment shall be allowed if asserted after final payment under this contract.

18. Disputes

(a) All disputes arising under this contract or its interpretation, whether involving law or fact or both, or extra work, and all claims for alleged breach of contract shall within ten (10) days of commencement of the dispute be presented by the Contractor to the Owner for decision. All papers pertaining to the claims shall be filed in quadruplicate. Such notice need not detail the amount of the claim, but shall state the facts surrounding the claim in sufficient detail to identify the claim, together with its character and scope. In the meantime the Contractor shall proceed with the work as directed. Any claim not presented within the time limit specified within this paragraph shall be deemed to have been waived,

except that if the claim is of a continuing character and notice of the claim is not given within ten days of its commencement, the claim will be considered only for a period commencing ten days prior to the receipt of the Owner of notice thereof.

(b) The Contractor shall submit in detail his claim and proof thereof. Each decision by the Owner will be in writing and will be mailed to the Contractor by registered mail, return receipt requested.

(c) If the Contractor does not agree with any decision of the Owner, he shall in no case allow the dispute to delay the work but shall notify the Owner promptly that he is proceeding with the work under protest and he may then except the matter in question from the final release.

19. Arbitration and Litigation

Any controversy or claim arising out of or relating to this contract, or the breach thereof, shall, at the option of the Owner, be settled by arbitration in accordance with the Construction Industry Arbitration Rules of the American Arbitration Association and judgment upon the award rendered by the Arbitrator(s) may be entered in any court having jurisdiction thereof. The Owner shall exercise its option to arbitrate concurrent with the rendering of its final decision on the claim. Should it fail to render a final decision within the prescribed time or fail to exercise its option, the claim will be determined in accordance with the Rules of the American Arbitration Association as hereinbefore stated.

20. Time for Completion and Liquidated Damages

It is hereby understood and mutually agreed, by and between the Contractor and the Owner, that the date of beginning and the time for completion as specified in the contract of the work to be done hereunder are ESSENTIAL CONDITIONS of this contract; and it is further mutually understood and agreed that the work embraced in this contract shall be commenced on a date to be specified in the "Notice to Proceed."

The Contractor agrees that said work shall be prosecuted regularly, diligently, and uninterruptedly at such rate of progress as will insure full completion thereof within the time specified. It is expressly understood and agreed, by and between the Contractor and the Owner, that the time for the completion of the work described herein is a reasonable time for the completion of the same, taking into consideration the average climatic range and usual industrial conditions prevailing in this locality.

If the said Contractor shall neglect, fail or refuse to complete the work within the time herein specified, or any proper extension thereof granted by the Owner, then the Contractor does hereby agree, as a part consideration for the awarding

of this contract, to pay to the Owner the amount specified in the contract, not as a penalty but as liquidated damages for such breach of contract as hereinafter set forth, for each and every calendar day that the Contractor shall be in default after the time stipulated in the contract for completing the work.

The said amount is fixed and agreed upon by and between the Contractor and the Owner because of the impracticability and extreme difficulty of fixing and as ascertaining the actual damages the Owner would in such event sustain, and said amount is agreed to be the amount of damages which the Owner would sustain and said amount shall be retained from time to time by the Owner from current periodical estimates.

It is further agreed that time is of the essence of each and every portion of this contract and of the specifications wherein a definite and certain length of time is fixed for the performance of any act whatsoever; and where under the contract an additional time is allowed for the completion of any work, the new time limit fixed by such extension shall be of the essence of this contract.

Provided, that the Contractor shall not be charged with liquidated damages or any excess cost when the Owner determines that the Contractor is without fault and the Contractor's reasons for the time extension are acceptable to the Owner; Provided, further, that the Contractor shall not be charged with liquidated damages or any excess cost when the delay in completion of the work is due:

(a) To any preference, priority or allocation order duly issued by the Government;

(b) To unforeseeable cause beyond the control and without the fault or negligence of the Contractor, including, but not restricted to, acts of God, or of the public enemy, acts of the Owner, acts of another Contractor in the performance of a contract with the Owner, fires, flood, epidemics, quarantine restrictions, strikes, freight embargoes, and severe weather; and

(c) To any delays of Subcontractors or suppliers occasioned by any of the causes specified in subsections (a) and (b) of this article:
Provided, further, that the Contractor shall, within ten (10) days from the beginning of such delay, unless the Owner shall grant a further period of time prior to the date of final settlement of the contract, notify the Owner, in writing, of the causes of the delay, who shall ascertain the facts and extent of the delay and notify the Contractor within a reasonable time of its decision in the matter.

21. Correction of Work

All work, all materials, whether incorporated in the work or not, all processes of manufacture, and all methods of construction shall be at all times and places subject to the inspection of the Architect/Engineer who shall be the final judge of the quality and suitability of the work, materials, processes of manufacture, and methods of construction for the purposes for which they are used. Should they fail to meet his approval they shall be forthwith reconstructed, made good, replaced and/or corrected, as the case may be, by the Contractor as his own expense. Rejected material shall immediately be removed from the site. If, in the opinion of the Architect/Engineer, it is undesirable to replace any defective or damaged materials or to reconstruct or correct any portion of the work injured or not performed in accordance with the Contract Documents, the compensation to be paid to the Contractor hereunder shall be reduced by such amount as in the judgment of the Architect/Engineer shall be equitable.

22. Subsurface Conditions Found Different

Should the Contractor encounter sub-surface and/or latent conditions at the site materially differing from those shown on the Plans or indicated in the Specifications, he shall immediately give notice to the Architect/Engineer of such conditions before they are disturbed. The Architect/Engineer will thereupon promptly investigate the conditions, and if he finds that they materially differ from those shown on the Plans and/or indicated in the Specifications he will at once make such changes in the Plans and/or Specifications as he may find necessary, any increase or decrease of cost resulting from such changes to be adjusted in the manner provided in Paragraph 17 of the General Conditions.

23. Right of the Owner to Terminate Contract

In the event that any of the provisions of this contract are violated by the Contractor, or by any of his Subcontractors, the Owner may serve written notice upon the Contractor and the Surety of its intention to terminate the contract, such notices to contain the reasons for such intention to terminate the contract, and unless within ten (10) days after the serving of such notice upon the Contractor, such violation or delay shall cease and satisfactory arrangement of correction be made, the contract shall, upon the expiration of said ten (10) days, cease and terminate. In the event of any such termination, the Owner shall immediately serve notice thereof upon the Surety and the Contractor and the Surety shall have the right to take over and perform the contract; Provided, however, that if the Surety does not commence performance thereof within ten (10) days from the date of the mailing to such Surety of notice of termination, the Owner may take over the work and prosecute the same to completion by contract or by force account for the account and at the expense of the Contractor and the Contractor and his Surety shall be liable to the Owner for any excess cost occasioned the Owner thereby, and in such event the Owner may take possession of and utilize

in completing the work, such materials, appliances, and plant as may be on the site of the work and necessary therefore.

24. Construction Schedule and Periodic Estimates

Immediately after execution and delivery of the contract, and before the first partial payment is made, the Contractor shall deliver to the Owner an estimated construction progress schedule in form satisfactory to the Owner, showing the proposed dates of commencement and completion of each of the various subdivisions of work required under the Contract Documents and the anticipated amount of each monthly payment that will become due the Contractor in accordance with the progress schedule. The Contractor shall also furnish on forms to be supplied by the Owner (a) a detailed estimate giving a complete breakdown of the contract price and (b) periodic itemized estimates of work done for the purpose of making partial payments thereon. The costs employed in making up any of these schedules will be used only for determining the basis of partial payments and will not be considered as fixing a basis for additions to or deductions from the contract price.

25. Payments to Contractor

(a) Not later than the 15th day of each calendar month the Owner shall make a progress payment to the Contractor on the basis of a duly certified and approved estimate of the work performed during the preceding calendar month under this contract; but to insure the proper performance of this contract, the Owner shall retain five percent (5%) of the amount of each estimate until final completion and acceptance of all work covered by this contract: Provided, that the Contractor shall submit his estimate not later than the first day of the month; Provided, further, that the Owner may at any time after fifty percent (50%) of the work has been completed, if it finds that satisfactory progress is being made, may make any of the remaining progress payments in full; Provided, further, that on completion and acceptance of each separate building, public work, or other division of the contract, on which the price is stated separately in the contract, payment may be made in full, including retained percentages thereon, less authorized deductions.

(b) In preparing estimates the material delivered on the site and preparatory work done may be taken into consideration.

(c) All material and work covered by partial payments made shall thereupon become the sole property of the Owner, but this provision shall not be construed as relieving the Contractor from the sole responsibility for the care and protection of materials and work upon which payments have been made or the restoration of any damaged work, or as a waiver of the

right of the Owner to require the fulfillment of all of the terms of the contract.

(d) Owner's Right to Withhold Certain Amounts and Make Application Thereof: The Contractor agrees that he will indemnify and save the Owner harmless from all claims growing out of the lawful demands of Subcontractors, laborers, workmen, mechanics, material men, and furnishers of machinery and parts thereof, equipment, power tools, and all supplies, including commissary, incurred in the furtherance of the performance of this contract. The Contractor shall, at the Owner's request, furnish satisfactory evidence that all obligations of the nature herein above designated have been paid, discharged, or waived. If the Contractor fails so to do, then the Owner may, after having served written notice on the said Contractor, either pay unpaid bills, of which the Owner has written notice, direct, or withhold from the Contractor's unpaid compensation a sum of money deemed reasonably sufficient to pay any and all such lawful claims until satisfactory evidence is furnished that all liabilities have been fully discharged whereupon payment to the Contractor shall be resumed, in accordance with the terms of this contract, but in no event shall the provisions of this sentence be construed to impose any obligations upon the Owner to either the Contractor or his Surety. In paying any unpaid bills of the Contractor, the Owner shall be deemed the agent of the Contractor, and any payment so made by the Owner, shall be considered as a payment made under the contract by the Owner to the Contractor and the Owner shall not be liable to the Contractor for any such payments made in good faith.

26. Acceptance of Final Payment Constitutes Release

The acceptance by the Contractor of final payment shall be and shall operate as a release to the Owner of all claims and all liability to the Contractor for all things done or furnished in connection with this work and for every act and neglect of the Owner and others relating to or arising out of this work. No payments, however, final or otherwise, shall operate to release the Contractor or his Sureties from any obligations under this contract or the Performance and Payment Bond.

27. Payments by Contractor

The Contractor shall pay (a) for all transportation and utility services not later than the 20th day of the calendar month following that in which services are rendered, (b) for all materials, tools, and other expendable equipment to the extent of ninety percent (90%) of the cost thereof, not later that the 20th day of the calendar month following that in which such materials, tools, and equipment are delivered at the site of the project, and the balance of the cost thereof, not later than the 30th day following the completion of that part of the work in or on

which such materials, tools, and equipment are incorporated or used, and (c) to each of his Subcontractors, not later than the 5th day following each payment to the Contractor, the respective amounts allowed the Contractor on account of the work performed by his Subcontractors to the extent of each subcontractor's interest therein.

28. Insurance

The Contractor shall not commence work under this contract until he has obtained all the insurance required under this paragraph and such insurance has been approved by the Owner, nor shall the Contractor allow any Subcontractor to commence work on his sub- contract until the insurance required of the Subcontractor has been so obtained and approved.

(a) Compensation Insurance: The Contractor shall procure and shall maintain during the life of this contract Workers' Compensation Insurance as required by applicable State or territorial law for all of his employees to be engaged in work at the site of the project under this contract and, in case of any such work sublet, the Contractor shall require the Subcontractor similarly to provide Workers' Compensation Insurance for all of the latter's employees to be engaged in such work unless such employees are covered by the protection afforded by the Contractor's Workers' Compensation Insurance. In case any class of employees engaged in hazardous work on the project under this contract is not protected under the Workers' Compensation Statute, the Contractor shall provide and shall cause each subcontractor to provide adequate employer's liability insurance for the protection of such of his employees as are not otherwise protected.

(b) Contractor'sPublic_Liability_and_Property_Damage_Insurance and_Vehicle_Liability_Insurance: The Contractor shall procure and shall maintain during the life of this contract Contractor's Public Liability Insurance, Contractor's Property Damage Insurance and Vehicle Liability Insurance in the amounts specified in the Supplemental General Conditions.

(c) Subcontractor's Public Liability and Property Damage Insurance and Vehicle Liability Insurance: The Contractor shall either (1) require each of his Subcontractors to procure and maintain during the life of his subcontract, Subcontractor's Public Liability and Property Damage Insurance and Vehicle Liability Insurance of the type and in the amounts specified in the Supplemental General Conditions specified in subparagraph (b) hereof, or (2) insure the activities of this policy, specified in subparagraph (b) hereof.

(d) Scope of Insurance and Special Hazards: The insurance required under subparagraphs (b) and (c) hereof shall provide adequate protection for the Contractor and his Subcontractors, respectively, against damage claims which may arise from operations under this contract, whether such operations be by the insured or by anyone directly or indirectly employed by him and, also against any of the special hazards which may be encountered in the performance of this contract as enumerated in the Supplemental General Conditions.

(e) Builder's Risk Insurance (Fire and Extended Coverage): Until the project is completed and accepted by the Owner, the Owner or the Contractor is required to maintain Builder's Risk Insurance (fire and extended coverage) on a 100 percent completed value basis on the insurable portion of the project for the benefit of the Owner, the Contractor, Subcontractors as their interests may appear. The Contractor shall not include any costs for Builder's Risk Insurance (fire and extended coverage) premiums during construction unless the Contractor is required to provide such insurance; however, this provision shall not release the Contractor from his obligation to complete, according to plans and specifications, the project covered by the contract, and the Contractor and his Surety shall be obligated to full performance of the Contractor's undertaking.

(f) Proof of Carriage of Insurance: The Contractor shall furnish the Owner with certificates showing the type, amount, class of operations covered, effective dates and date of expiration of policies. Such certificates shall also contain substantially the following statement; "The insurance covered by this certificate will not be canceled or materially altered, except after ten (10) days written notice has been received by the Owner." The City of New Britain and the Consolidated School District" must be shown on the certificate(s) as "Additional Insured".

29. Contract Security

The Contractor shall furnish a performance bond in an amount at least equal to one hundred percent (100%) of the contract prices as security for the faithful performance of this contract and also a payment bond in an amount not less than one hundred percent (100%) of the contract price or in a penal sum not less than that prescribed by State, territorial or local law, as security for the payment of all persons performing labor on the project under this contract and furnishing materials in connection with this contract. The performance bond and the payment bond may be in one or in separate instruments in accordance with local law.

30. Additional or Substitute Bond

If at any time the Owner for justifiable cause shall be or become dissatisfied with any Surety or Sureties, then upon the Performance or Payment Bonds, the Contractor shall within five (5) days after notice from the Owner so to do, substitute an acceptable bond (or bonds) in such form and sum and signed by such other Surety or Sureties as may be satisfactory to the Owner. The premiums on such bond shall be paid by the Contractor. No further payments shall be deemed due nor shall be made until the new Surety or Sureties shall have furnished such an acceptable bond to the Owner.

31. Assignments

The Contractor shall not assign the whole or any part of this contract or any monies due or to become due hereunder without written consent of the Owner. In case the Contractor assigns all or part of any monies due or to become due under this contract, the instrument of assignment shall contain a clause substantially to the effect that it is agreed that the right of the assignee in and to any monies due or to become due to the Contractor shall be subject to prior claims of all persons, firms and corporations of services rendered or materials supplied for the performance of the work called for in this contract.

32. Mutual Responsibility of Contractors

If, through acts of neglect on the part of the Contractor, any other Contractor or any Subcontractor shall suffer loss or damage on the work, the Contractor agrees to settle with such other Contractor or Subcontractors by agreement or arbitration if such other Contractor or Subcontractor will so settle. If such other Contractor or Subcontractor shall assert any claim against the Owner on account of any damage alleged to have been sustained, the Owner shall notify the Contractor, who shall indemnify and save harmless the Owner against any such claim.

33. Separate Contract

The Contractor shall coordinate his operations with those of other Contractors. Cooperation will be required in the arrangement for the storage of materials and in the detailed execution of the work. The Contractor, including his Subcontractors, shall keep informed of the progress and the detail work of other Contractors and shall notify the Architect/Engineer immediately of lack of progress or defective workmanship on the part of other Contractors. Failure of a Contractor to keep informed of the work progressing on the site and failure to give notice of lack of progress or defective workmanship by others shall be construed as acceptance by him of the status of the work as being satisfactory for proper coordination with his own work.

34. Subcontracting

(a) The Contractor may utilize the services of specialty Subcontractors on those parts of the work which, under normal contracting practices, are performed by specialty Subcontractors.

(b) The Contractor shall not award any work to any Subcontractor without prior written approval of the Owner, which approval will not be given until the Contractor submits to the Owner a written statement concerning the proposed award to the Subcontractor, which statement shall contain information as the Owner may require.

(c) The Contractor shall be as fully responsible to the Owner for the acts and omissions of his Subcontractors, and of persons either directly or indirectly employed by them, as he is for the acts and omissions of persons directly employed by him.

(d) The Contractor shall cause appropriate provisions to be inserted in all subcontracts relative to the work to bind Subcontractors to the Contractor by the terms of the General Conditions and other Contract Documents insofar as applicable to the work of Subcontractors and to give the Contractor the same power as regards terminating any subcontract that the Owner may exercise over the Contractor under any provision of the Contract Documents.

(e) Nothing contained in this contract shall create any contractual relation between any Subcontractor and the Owner.

35. Architect/Engineer's Authority

The Architect/Engineer shall give all orders and directions contemplated under this contract and specifications, relative to the execution of the work. The Architect/Engineer shall determine the amount, quality, acceptability, and fitness of the several kinds of work and materials which are to be paid for under this contract and shall decide all questions which may arise in relation to said work and the construction thereof. The Architect/Engineer's estimates and decisions shall be final and conclusive, except as herein otherwise expressly provided. In case any question shall arise between the parties hereto relative to said contract or specifications, the determination or decision of the Architect/Engineer shall be a condition precedent to the right of the Contractor to receive any money or payment for work under this contract affected in any manner or to any extent by such question.

The Architect/Engineer shall decide the meaning and intent of any portion of the specifications and of any plans or drawings where the same may be found obscure or be in dispute. Any differences or conflicts in regard to their work

which may arise between the Contractor under this contract and other Contractors performing work for the Owner shall be adjusted and determined by the Architect/Engineer.

36. Stated Allowances

The Contractor shall include in his proposal the cash allowances stated in the Supplemental General Conditions. The Contractor shall purchase the "Allowed Materials" as directed by the Owner on the basis of the lowest and best bid of at lease three competitive bids. If the actual price for purchasing the "Allowed Materials" is more or less than the "Cash Allowance," the contract price shall be adjusted accordingly. The adjustment in contract price shall be made on the basis of the purchase price without additional charges for overhead, profit, insurance or any other incidental expenses. The cost of installation of the "Allowed Materials" shall be included in the applicable sections of the Contract Specifications covering this work.

37. Use of Premises and Removal of Debris

The Contractor expressly undertakes at his own expense:

(a) to take every precaution against injuries to persons or damage to property;

(b) to store his apparatus, materials, supplies and equipment in such orderly fashion at the site of the work as will not unduly interfere with the progress of his work or the work of any other contractor's;

(c) to place upon the work or any part thereof only such loads as are consistent with the safety of that portion of the work;

(d) to clean up frequently all refuse, rubbish, scrap materials, and debris caused by his operations, to the end that at all times the site of the work shall present a neat, orderly and workmanlike appearance;

(e) before final payment to remove all surplus material, false- work, temporary structures, including foundations thereof, plant of any description and debris of every nature resulting from his operations, and to put the site in a neat, orderly condition;

(f) to effect all cutting, fitting or patching of his work required to make the same to conform to the plans and specifications and, except with the consent of the Architect/ Engineer, not to cut or otherwise alter the work of any other Contractor.

38. Quantities of Estimate

Increased or decreased quantities of minor items, and elimination of minor items shall be in accordance with Form 816 Section 1.04.02.

39. Lands and Rights-of-Way

Prior to the start of construction, the Owner shall obtain all lands and rights-of-way necessary for the carrying out and completion of work to be performed under this contract.

40. General Guaranty

Neither the final certificate of payment nor any provision in the Contract Documents, nor partial or entire occupancy of the premises by the Owner, shall constitute an acceptance of work not done in accordance with the Contract Documents or relieve the Contractor of liability in respect to any express warranties or responsibility for faulty materials or workmanship. The Contractor shall remedy any defects in the work and pay for any damage to other work resulting there from, which shall appear within a period of one year from the date of final acceptance of the work unless a longer period is specified. The Owner will give notice of observed defects with reasonable promptness.

41. Notice and Service Thereof

Any notice to any Contractor from the Owner relative to any part of this contract shall be in writing and considered delivered and the service thereof completed, when said notice is posted, by certified or registered mail, to the said Contractor at his last given address, or delivered in person to the said Contractor or his authorized representative on the work.

42. Provisions Required by Law Deemed Inserted

Each and every provision of law and clause required by law to be inserted in this contract shall be deemed to be inserted herein and the contract shall be read and enforced as though it were included herein, and if through mistake or otherwise any such provision is not inserted, or is not correctly inserted, then upon the application of either party the contract shall forthwith be physically amended to make such insertion or correction.

43. Protection of Lives and Health

In order to protect the lives and health of his employees under the contract, the Contractor shall comply with all pertinent provisions of the "Manual of Accident Prevention in Construction" issued by the Associated General Contractors of America, Inc., and shall maintain an accurate record of all cases of death,

occupational disease, and injury requiring medical attention or causing loss of time from work, arising out of and in the course of employment on work under the contract. He alone shall be responsible for the safety, efficiency, and adequacy of his plant, appliances, and methods, and for any damage which may result from their failure or their improper construction, maintenance, or operation.

44. Subcontracts

The Contractor will insert in any subcontracts the sections 52 through 56 contained herein and such other clauses as the Department of Housing and Urban Development and /or the City of New Britain may, by instructions, require, and also a clause requiring the Subcontractors to include these clauses in any lower tier subcontracts which they may enter into, together with a clause requiring this insertion in any further subcontracts that may in turn be made.

45. Equal Employment Opportunity

During the performance of this contract the Contractor agrees as follows:

(a) The Contractor will not discriminate against any employee or applicant for employment because of race, creed, color, or national origin. The Contractor will take affirmative action to ensure that applicants are employed, and that employees are treated during employment, without regard to their race, creed, color or national origin. Such action shall include, but not be limited to, the following: employment, upgrading, demotion, or transfer; recruitment or recruitment advertising; layoff or termination; rates of pay or other forms of compensation and selection for training, including apprenticeship. The Contractor agrees to post in conspicuous places, available to employees and applicants for employment, notices to be provided setting forth the provisions of this nondiscrimination clause.

(b) The Contractor will, in all solicitations or advertisements for employees placed by or on behalf of the Contractor, state that all qualified applicants will receive consideration for employment without regard to race, creed, color, or national origin.

(c) The Contractor will send to each labor union or representative of workers with which he has a collective bargaining agreement or other contract or understanding, a notice to be provided advising the labor union or workers' representative of the Contractor's commitments under Section 202 of Executive Order No. 11246 of September 24, 1965, and shall post copies of the notice in conspicuous places available to employees and applicants for employment.

(d) The Contractor will comply with all provisions of Executive Order No. 11246 of September 24, 1965, and of the rules, regulations, and relevant orders of the Secretary of Labor.

(e) The Contractor will furnish all information and reports required by Executive Order No. 11246 of September 24, 1965, and by the rules, regulations, and orders of the Secretary of Labor, or pursuant thereto, and will permit access to his books, records, and accounts by the City of New Britain and the Secretary of Labor for purposes of investigation to ascertain compliance with such rules, regulations and orders.

(f) In the event of the Contractor's noncompliance with the nondiscrimination clauses of this Contract or with any of such rules, regulations, or orders, this contract may be canceled, terminated, or suspended in whole or in part and the Contractor may be declared ineligible for further contracts or Federally assisted construction contracts, in accordance with procedures authorized in Executive Order No. 11246 of September 24, 1965, or by rule, regulation, or order of the Secretary of Labor, or as otherwise provided by law.

(g) The Contractor will include the provisions of paragraphs (1) through (7) in every subcontract or purchase order unless exempted by rules, regulations, or orders of the Secretary of Labor issued pursuant to Section 204 of Executive Order No. 11246 of September 24, 1965, so that such provisions will be binding upon each Subcontractor or vendor. The Contractor will take such action with respect to any subcontract or purchase order as the City of New Britain may direct as a means of enforcing such provisions, including sanction for noncompliance: Provided, however, that in the event the Contractor becomes involved in, or is threatened with, litigation with a subcontractor or vendors as a result of such direction by the City of New Britain; the Contractor may request the United States to enter into such litigation to protect the interests of the United States.

46. Interest of Member of or Delegate to Congress

No member of or Delegate to Congress, or Resident Commissioner, shall be admitted to any share or part of this contract or to any benefit that may arise therefrom, but this provision shall not be construed to extend to this contract if made with a corporation for its general benefit.

47. Other Prohibited Interests

No official of the Owner who is authorized in such capacity and on behalf of the Owner to negotiate, make, accept or approve, or to take part in negotiating,

making, accepting, or approving any architectural, engineering, inspection, construction or material supply contract or any subcontract in connection with the construction of the project, shall become directly or indirectly interested personally in this contract or in any part hereof. No officer, employee, architect, attorney, engineer or inspector of or for the Owner who is authorized in such capacity and on behalf of the Owner to exercise any such legislative, executive, supervisory or other similar functions in connection of the project, shall become directly or indirectly interested personally in this contract or in any part thereof, any material supply contract, subcontract, insurance contract, or any other contract pertaining to the project.

48. Use and Occupancy Prior to Acceptance by Owner

The Contractor agrees to the use and occupancy of a portion or unit of the project before formal acceptance by the Owner, provided the Owner:

(a) Secures written consent of the Contractor except in the event, in the opinion of the Architect/Engineer, the Contractor is chargeable with unwarranted delay in final cleanup of punch list items or other contract requirements;

(b) Secures endorsement from the insurance-carrier and consent of the Surety permitting occupancy of the building or use of the project during the remaining period of construction; or

(c) When the project consists of more than one building, and one of the buildings is occupied, secures permanent fire and extended coverage insurance, including a permit to complete construction. Consent of the Surety must also be obtained.

49. Photographs of the Project

The Contractor shall furnish videos / photographs of the project as required under Notice to Contractor.

50. Suspension of Work

Should the Owner be prevented or enjoined from proceeding with work either before or after the start of construction by reason of any litigation or other reason beyond the control of the Owner, the Contractor shall not be entitled to make or assert claim for damage by reason of said delay; but time for completion of the work will be extended to such reasonable time as the Owner may be determined will compensate for time lost by such delay with such determination to be set forth in writing.

51. Minimum Wages

(a) The Contractor shall post at appropriate conspicuous points at the site of the project a schedule showing all determined minimum wage rates for the various classes of laborers and mechanics to be engaged in work on the project under this contract and all deductions, if any, required by law to be made from unpaid wages actually earned by the laborers and mechanics so engaged.

(b) All mechanics and laborers employed or working upon the site of the work will be paid unconditionally and not less often than once a week, and without subsequent deduction or rebate on any account (except such payroll deductions as are permitted by regulations issued by the Secretary of Labor under the Copeland Act (29 CFR Part 3)), the full amounts due at time of payment computed at wage rates not less than those contained in the wage determination decision of the Secretary of Labor, which is attached hereto and made a part hereof, regardless of any contractual relationship which may be alleged to exist between the Contractor and such laborers and mechanics. For the purpose of this clause, contributions made or costs reasonably anticipated under Section 1(b)(2) of the Davis-Bacon Act on behalf of laborers or mechanics are considered wages paid to such laborers or mechanics, subject to the provisions of 29 CFR 5.5(a)(1)(iv). Also for the purpose of this clause, regular contributions made or costs incurred for more than a weekly period under plans, funds, or programs, but covering the particular weekly period, are deemed to be constructively made or incurred during such weekly period.

(c) The City of New Britain shall require that any class of laborers or mechanics which is not listed in the wage determination and which is to be employed under the contract, shall be classified or reclassified conformably to the wage determination, and a report of the action taken shall be sent by the City of New Britain to the Secretary of Labor. In the event the interested parties cannot agree on the proper classification or reclassification of a particular class of laborers and mechanics to be used, the question accompanied by the recommendation of the City of New Britain shall be referred to the Secretary for final determination.

(d) The City of New Britain shall require, whenever the minimum wage rate prescribed in the contract for a class of laborers or mechanics includes a fringe benefit which is not expressed as an hourly wage rate and the Contractor is obligated to pay a cash equivalent of such a fringe benefit, an hourly cash equivalent thereof to be established. In the event the interested parties cannot agree upon a cash equivalent of the fringe benefit, the question, accompanied by the recommendation of the City of New Britain, shall be referred to the Secretary of Labor for determination.

(e) The Contractor may consider as part of the wages of any laborer or mechanic the amount of any costs reasonably anticipated in providing benefits under a plan or program described in section 1(b)(2)(B) of the Davis-Bacon Act, or any bona fide fringe benefits not expressly listed in Section 1(b)(2) of the Davis-Bacon Act or otherwise not listed in the wage determination decision of the Secretary of Labor which is included in this contract, only when the Secretary of Labor has found, upon the written request of the Contractor, that the applicable standards of the Davis-Bacon Act have been met. Whenever practicable, the Contractor should request the Secretary of Labor to make such findings before the making of the contract. In the case of unfunded plans and programs, the Secretary of Labor may require the Contractor to set aside in a separate account assets for the meeting of obligations under the plan or program.

(f) The specified wage rates are minimum rates only, and the owner will not consider any claims for additional compensation made by the Contractor because of payment by the Contractor of any wage rate in excess of the applicable rate contained in this contract. All disputes in regard to the payment of wages in excess of those specified in this contract shall be adjusted by the Contractor.

(g) If the Contractor does not make payments to a trustee or other third person, he may consider as part of the wages of any laborer or mechanic the amount of any costs reasonably anticipated in providing benefits under a plan or program of a type expressly listed in the wage determination decision of the Secretary of Labor which is a part of this contract: Provided however, the Secretary of Labor has found upon the written request of the Contractor that the applicable standards of the Davis-Bacon Act have been met. The Secretary of Labor may require the Contractor to set aside in a separate account assets for the meeting of obligations under the plan or program.

52. Withholding of Payments

The City of New Britain may withhold or cause to be withheld from the Contractor so much of the accrued payments or advances as may be considered necessary to pay laborers and mechanics employed by the Contractor or any Sub-contractor on the work the full amount of wages required by the contract. In the event of failure to pay any laborer or mechanic employed or working on the site of the work, all or part of the wages required by the contract, the City of New Britain may, after written notice to the Contractor or Owner, take such action as may be necessary to cause the suspension of any further payment, advance, or guarantee of funds until such violations have ceased.

53. Payrolls and Basic Records

(a) Payrolls and basic records relating thereto will be maintained during the course of the work and preserved for a period of three years thereafter for all laborers and mechanics working at the site of the work. Such records will contain the name and address of each such employee, his correct classification, rates of pay (including rates of contributions or costs anticipated of the types described in section 1(b)(2) of the Davis-Bacon Act), daily and weekly number of hours worked, deductions made and actual wages paid. Whenever the secretary of Labor has found under 29 CFR 5.5(a)(1)(iv) that the wages of any laborer or mechanic include the amount of any costs reasonably anticipated in providing benefits under a plan or program described in section 1(b)(2)(B) of the Davis-Bacon Act, the Contractor shall maintain records which show that the commitment to provide such benefits is enforceable, that the plan or program is financially responsible, and that the plan or program has been communicated in writing to the laborers or mechanics affected, and records which show the costs anticipated or the actual cost incurred in providing such benefits.

(b) The Contractor will submit weekly a copy of all payrolls to the Owner, for transmission to the City of New Britain. The copy shall be accompanied by a statement signed by the employer or his agent indicating that the payrolls are correct and complete, that the wage rates contained therein are not less than those determined by the Secretary of Labor and that the classifications set forth for each laborer or mechanic conform with the work he performed. A submission of a "Weekly Statement of Compliance" which is required under this contract and the Copeland regulations of the Secretary of Labor (29 CFR, Part 3) and the filing with the initial payroll or any subsequent payroll of a copy of any findings by the Secretary of Labor under 29 CFR 5.5(a)(l)(iv) shall satisfy this requirement. The Prime Contractor shall be responsible for the submission of copies of payrolls of all Subcontractors. The Contractor shall make the records required under the labor standards clauses of the contract available for inspection by authorized representatives of the City of New Britain and the Department of Labor, and shall permit such representatives to interview employees during working hours on the job.

54. Apprentices

Apprentices shall be permitted to work as such only when they are registered, individually, under a bona fide apprenticeship agency which is recognized by the Bureau of Apprenticeship and Training, United States Department of Labor; or, if no such recognized agency exists in a State, under a program registered with the Bureau of Apprentice- ship and Training, United States Department of Labor. The allowable ratio of apprentices to journeymen in any craft classification shall not be greater than the ratio permitted to the Contractor as to his entire work

force under the registered program. Any employee listed on a payroll at an apprentice wage rate, who is not registered as above, shall be paid the wage rate determined by the Secretary of Labor for the classification of work he actually performed. The Contractor or Subcontractor will be required to furnish to the City of New Britain written evidence of the registration of his program and apprentices as well as of the appropriate ratios and wage rates, for the area of construction, prior to using any apprentices on the contract work.

55. Compliance with the Copeland Anti-Kickback Act and Regulations

The Contractor shall comply with the Copeland Anti-Kickback Act and Regulations of the Secretary of Labor (29 CFR, Part 3) which are herein incorporated by reference.

56. Overtime

(a) No Contractor or Subcontractor contracting for any part of the contract work which may require or involve the employment of laborers or mechanics, including watchmen and guards, shall require or permit any laborer or mechanic in any workweek in which he is employed on such work to work in excess of forty hours in such workweek unless such laborer or mechanic receives compensation at a rate not less than one and one-half times his basic rate of pay for all hours worked in excess of forty hours in such workweek, as the case may be;

(b) Violation; liability for unpaid wages; liquidated damages. In the event of any violation of the clause set forth in subparagraph (l), the Contractor and any Subcontractor responsible therefore shall be liable to any affected employee for his unpaid wages. In addition, such Contractor and Subcontractor shall be liable to the United States (in the case of work done under contract for the District of Columbia or a territory, to such District or to such territory), for liquidated damages. Such liquidated damages shall be computed with respect to each individual laborer or mechanic employed in violation of the clause set forth in subparagraph (l), in the sum of $10 for each calendar day on which such employee was required or permitted to work in excess of the standard work week of forty hours without payment of the overtime wages required by the clause set forth in subparagraph (l).

(c) Withholding for unpaid wages and liquidated damages. The City of New Britain may withhold or cause to be withheld, from any monies payable on account of work performed by the Contractor or Subcontractor, such sums as may administratively be determined to be necessary to satisfy any liabilities of such Contractor or Subcontractor for unpaid wages and liquidated damages as provided in the clause set forth in subparagraph (2).

(d) Subcontracts. The Contractor shall insert in any subcontracts and clauses set forth in subparagraphs (a), (b), and (c) of this paragraph and also a clause requiring the Subcontractors to include these clauses in any lower tier subcontracts which they may enter into, together with a clause requiring this insertion in any further subcontracts that may in turn be made.

57. Signs

The General Contractor shall erect a sign at the project site identifying the project and indicating that the Government is participating in the development of the project. The project sign shall be substantially in accordance with instructions provided by the City of New Britain, made from 3/4 inch plywood, place in a prominent location, and maintained in good condition until completion of the project.

58. Employment Practices

The Contractor (l) shall, to the greatest extent practicable, follow hiring and employment practices for work on the project which will provide new job opportunities for the unemployed and underemployed, and (2) shall insert or cause to be inserted the same provision in each construction subcontract.

59. Contract Termination; Debarment

A breach of Sections 45 and 52 through 56 may be grounds for termination of the contract, and for debarment as provided in 29 CFR 5.6.

60. Termination for Convenience of the Owner

(a) The Owner may terminate performance of work under this contract in whole, or from time to time, in part if the Owner determines that termination is in its best interest. The Owner shall terminate by delivering to the Contractor a Notice of Termination specifying the extent of termination and the effective date.

(b) After receipt of a Notice of Termination, and except as directed by the Owner, the Contractor shall immediately proceed with the following obligations, regardless of any delay in determining or adjusting any amounts due under this clause:

(1) Stop work as specified in the notice.
(2) Place no further subcontracts or orders (referred to as subcontracts in this clause) for materials, services, or facilities, except as necessary to complete the continued portion of the contract.

(3) Terminate all subcontracts to the extent they relate to the work terminated.

(4) Assign to the Owner, as directed by the Owner, all right, title, and interest of the Contractor under the subcontracts terminated, in which case the Owner shall have the right to settle or pay any termination settlement proposal arising out of those terminations.

(5) With approval or ratification to the extent required by the Owner, settle all outstanding liabilities and termination settlement proposals arising from the termination of subcontracts; the approval or ratification will be final for the purposes of this clause.

(6) As directed by the Owner, transfer title and deliver to the Owner:
(i) the fabricated or unfabricated parts, work in process, completed work, supplies, and other material produced or acquired for the work terminated, and;
(ii) the completed or partially completed plans, drawings, information, and other property that, if the contract had been completed, would be required to be furnished to the Owner.

(7) Complete performance of the work not terminated.

(8) Take any action that may be necessary, or that the Owner may direct, for the protection and preservation of the property related to this contract that is in the possession of the Contractor and in which the Owner has or may acquire an interest.

(9) Use its best efforts to sell, as directed or authorized by the Owner, any property of the types referred to in subparagraph (6) above; provided, however, that the Contractor:
(i) is not required to extend credit to any purchaser, and;
(ii) may acquire the property under the conditions prescribed by, and at prices approved by, the Owner. The proceeds of any transfer or disposition will be applied to reduce any payments to be made by the Owner under this contract, credited to the price or cost of the work, or paid in any other manner as directed by the Owner.

(c) After expiration of the plant clearance period as defined in Subpart 45.6 of the Federal Acquisition Regulation, the Contractor may submit to the Owner a list, certified as to quantity and quality, of termination inventory not previously disposed of, excluding items authorized for disposition by the Owner. The Contractor may request the Owner to remove those items or enter into an agreement for their storage. Within fifteen days, the Owner will accept title to those items and remove them or enter into a storage agreement. The Owner may verify the list upon removal of the items, or if stored, within 45 days of the submission of the list, and shall correct the list, as necessary, before final settlement.

(d) After termination, the Contractor shall submit a final termination settlement proposal to the Owner in the form and with the certification prescribed by the Owner. The Contractor shall submit the proposal

promptly, but no later than 1 year from the effective date of termination, unless extended in writing by the Owner upon written request of the Contractor within this 1 year period. However, if the Owner determines that the facts justify it, a termination settlement proposal may be received and acted upon after 1 year or any extension. If the Contractor fails to submit the proposal within the time allowed, the Owner may determine, on the basis of information available, the amount, if any, due the Contractor because of the termination and shall pay the amount determined.

(e) Subject to paragraph (d) above, the Contractor and the Owner may agree upon the whole or any part of the amount to be paid because of the termination. The amount may include a reasonable allowance for profit on work done. However, the agreed amount, whether under this paragraph (e) or (f) below, exclusive of costs shown in subparagraph (f)(3), may not exceed the total contract price as reduced by (1) the amount of payments previously made and (2) the contract price of work not terminated. The contract shall be amended and the Contractor paid the agreed amount. Paragraph (f) below shall not limit, restrict, or affect the amount that may be agreed upon to be paid under this paragraph.

(f) If the Contractor and the Owner fail to agree on the whole amount to be paid because of the termination of work, the Owner shall pay the Contractor the amounts determined by the Owner as follows, but without duplication of any amounts agreed on under paragraph (e) above:

(1) The contract price for completed supplies or services accepted by the Owner (or sold or acquired under subparagraph (b)(9) above) not previously paid for, adjusted for any saving of freight and other charges.

(2) The total of-

(i) The costs incurred in the performance of the work terminated, including initial cost and preparatory expense allocable thereto. but excluding any costs attributable to supplies or services paid or to be paid under subparagraph (f)(1) above;

(ii) The cost of settling and paying termination settlement proposals under terminated subcontracts that are properly chargeable to the terminated portion of the contract if not included in subdivision (i) above; and

(iii) A sum, as profit on subdivision (i) above, determined by the Owner under 49.202 of the Federal Acquisition Regulation, in effect on the date of this contract, to be fair and reasonable; however, if it appears that the Contractor would have sustained a loss on the entire contract had it been completed, the Owner shall allow no profit under this subdivision (iii) and shall reduce the settlement to reflect the indicated rate of loss.

(3) The reasonable costs of settlement of the work terminated, including-

(i) Accounting, legal, clerical, and other expenses reasonably necessary for the preparation of the termination settlement proposals and supporting data;

(ii) The termination and settlement of subcontracts (excluding the amounts of such settlements); and

(iii) Storage transportation and other costs incurred, reasonably necessary for the preservation, protection, or disposition of the termination inventory.

(g) Except for normal spoilage, and except to the extent that the Owner expressly assumed the risk of loss, the Owner shall exclude from the amounts payable to the Contractor under paragraph (f) above, the fair value, as determined by the Owner, of property that is destroyed, lost, stolen, or damaged so as to become undeliverable to the Owner or to a buyer.

(h) The cost principles and procedures of Part 31 of the Federal Acquisition Regulation, in effect on the date of the contract, shall govern all costs claimed or agreed to under this clause.

(i) The Contractor shall have the right of appeal, under the Disputes clause, for any determination made by the Owner under paragraph (d), (f), or (k), except that if the Contractor failed to submit the termination settlement proposal within the time provided in paragraph)d) or (k), and failed to request a time extension, there is no right of appeal. If the Owner has made a determination of the amount due under paragraph (d), (f), or (k), the Owner shall pay the Contractor (1) the amount determined by the Owner if there is no right of appeal or if no timely appeal has been taken, or (2) the amount finally determined on an appeal.

(j) In arriving at the amount due the Contractor under this clause, there shall be deducted:

(1) All unliquidated advanced or other payments to The Contractor under the terminated portion of this contract;

(2) Any claim which the Owner has against the Contractor under this contract; and

(3) The agreed price for, or the proceeds of sale of, materials, supplies or other things acquired by the Contractor or sold under the provisions of this clause and not recovered by or credited to the Owner.

(k) If the termination is partial, the Contractor may file a proposal with the Owner for an equitable adjustment of the price(s) of the continued portion

of the contract. The Owner shall make any equitable adjustment agreed upon. Any proposal by the Contractor for an equitable adjustment under this clause shall be requested within 90 days from the effective date of termination unless extended in writing by the Owner.

(l)

(1) The Owner may, under the terms and conditions it prescribes, make partial payments and payments against incurred by the Contractor for terminated portions of the contract, if the Owner believes the total of these payments will not exceed the amount to which the Contractor will be entitled.

(2) If the total payments exceed the amount finally determined to be due, the Contractor shall repay the excess to the Owner upon demand, computed with interest at the rate established by the Secretary of the Treasury under 50 U.S.C. App. 1215(b)(2). Interest shall be computed for the period from the date the excess payment is received by the Contractor to the date the excess is repaid. Interest shall not be charged on any excess payment due to a reduction in the Contractor's termination proposal because of a retention or other disposition of termination inventory until 10 days after the date of retention or disposition, or a later date determined by the Owner because of the circumstances.

(m) Unless otherwise provided for in this contract or by statute, the Contractor shall maintain all records and documents relating to the terminated portion of this Contract three years after final settlement. This includes all books and other evidence bearing on the Contractor's costs and expenses under this contract. The Contractor shall make these records and documents available to the Owner, at the Contractor's office, at all reasonable times, without any direct charge. If approved by the Owner, photographs, microphotographs, or other authentic reproductions may be maintained instead of original records and documents.

61. Ordinance Compliance

Submission of a bid in response to this solicitation indicates that the Contractor understands and agrees to the terms of this section. Contractor shall comply with City of New Britain Code of Ordinances, Section 2-580, provisions following:

(1) The contractor shall hire residents of the city to perform the necessary labor where possible.

(2) In the event the contractor is restricted by labor contracts, or the required specific skills are not available in the city, the contractor may hire tradesmen and laborers who reside outside the city.

(3) In contracts for new construction of any public works project where the total cost of all work to be performed by all contractors and subcontractors exceeds four hundred thousand dollars ($400,000) and in contracts for remodeling, refinishing, refurbishing, rehabilitation, alteration or repair of any public works project where the total of all work to be performed by all contractors and subcontractors exceeds one hundred thousand dollars ($100,000), all tradesmen and laborers hired to perform under the contract shall be paid at the prevailing rates for the same work in the same trade in the city and shall receive the fringe benefits normally offered at that time for the particular trade. “Prevailing rates” as used herein shall mean the latest rates published by the state labor department unless otherwise required to qualify for a federal grant pertaining to the contract. As used herein, the term “contractor” shall include the general or prime contractor and shall include subcontractors performing work under the contract.

(4) All workers furnishing the goods and services in connection with the construction shall be properly classified as employees rather than independent contractors, causing them to be treated accordingly for the purposes of pay, benefits, workers’ compensation insurance coverage, social security taxes and income tax withholding.

(5) In contracts where the total cost of all work to be performed exceeds one hundred thousand dollars ($100,000) and in all cases wherein one or more apprentices are employed, the employer shall be affiliated with a state-certified apprenticeship program.

(6) If a contractor signing a contract required under this subsection is found to have violated the provisions of this contract, it shall, if already paid by the City, reimburse to the City one percent of the payment that would have otherwise been owed by the City for every count of violation found. If a contractor signing a contract required under this subsection is found to have violated the provisions the contract and it has not already been paid by the City, the City shall withhold from payment one percent of the payment that would have otherwise been owed by the City for every count of violation found. For these purposes, each day of violation and each worker affected shall be deemed a separate count. Each construction contract entered into by the city shall recite that the contractor understands and agrees to the terms of this section.

(7) As used herein, the term “contractor” shall include the general or prime contractor and shall include subcontractors performing work under the contract.

Index to General Conditions

Additional Bond	30
Additional Instructions	3
Allowances	36
Anti-Kickback Act	55
Apprentices	54
Arbitration	19
Architect's Authority	35
Assignments	31
Bond, Security	29
Bond, Security, Additional	30
Changes	17
Completion Time	20
Computation of Wages	51
Condition, Subsurface	22
Construction Schedule	24
Contract Documents	1
Contract Security	29
Contractor's Insurance	28
Contract Termination	23,60
Contractor's Mutual Responsibility	32
Contractor's Obligations	11
Contractor's Payrolls	53
Contractor's Title to Materials	6
Copeland Regulations	55
Correction of Work	21
Damages, Liquidated	20
Data, Reports and Records	15
Debarment	59
Debris Removal	37
Definitions	2
Detail Drawings	3
Different Subsurface	22
Discrimination, Employment	45
Disputes	18
Drawings, Shop	4
Emergencies	13
Employment Practices	58
Engineer's Authority	35
Equal Employment Opportunity	45
Estimated Quantities	38
Final Payment	26
Guaranty, General	40
Inspection	14
Inspection of Materials	7
Insurance	28
Lands and Rights-of- Way	39
Legal provisions, Inserted	42
Liquidated Damages	20
Litigation	19
Materials	5
Member of Congress	46

Minimum Wages	51
Non-Discrimination in Employment	45
Notice and Service	41
Obligations of Contractor	11
"Or Equal" Clause	8
Ordinance Compliance	61
Overtime Requirements	56
Owner's Right to Terminate	23,60
Patents	9
Payments to Contractor	25
Payment of Employees	51
Payments by Contractor	27
Payrolls of Contractor and Subs	53
Periodic Estimates	24
Permits, Surveys, Regulations	10
Photographs	49
Posting Minimum Wage Rates	51
Prohibited Interests	47
Protection of Lives and Health	43
Protection of Work, Property	13
Provisions Required by Law	42
Quantities of Estimate	38
Regulations, Kickback	55
Release of Contractor	26
Removal of Debris	37
Reports, Records, and Data	15
Responsibility of the Contractor	32
Right of Owner to Terminate	23,60
Rights-of-Way	39
Schedule of Construction	24
Security	29
Separate Contract	33
Services, Materials, and Facilities	5
Shop drawings	4
Signs	57
Stated Allowances	36
Subcontracting	34,44
Subcontractors’ Insurance	28
Subcontractors' Payrolls	53
Substitute Bond	30
Subsurface Conditions	22
Superintendence by Contractor	16
Surveys, Permits and Regulations	10
Suspension of Work	50
Termination of Contract	23,59
Testing of Materials	7
Time for Completion	20
Title to Materials	6
Use and Occupancy	48
Use of Premises	37
Wage Adjustments	52
Wages, Minimum	51
Wage Underpayments	52
Weather Conditions	12
Withholding Payments	52
Work Suspension	50

SUPPLEMENTAL GENERAL CONDITIONS (Rev. 06/15/2016)

1. SELECTED DEFINITIONS

2. INSURANCE REQUIREMENTS

3. MINIMUM WAGE REQUIREMENTS

4. ENGINEER - AUTHORITIES AND DUTIES

5. INSPECTION

6. SUPERINTENDENCE BY CONTRACTOR

7. CHARACTER OF WORKERS, METHODS, AND EQUIPMENT

8. SUBCONTRACTING

9. CONSTRUCTION SURVEYING / LAYOUT

10. PERMITS AND REGULATIONS

11. ACCESS CONSIDERATIONS

12. PROTECTION OF PERSON AND PROPERTIES

13. SUBSURFACE CONDITIONS

14. EXISTING CONDITIONS FOUND DIFFERENT

15. EXISTING UNDERGROUND UTILITIES, PROTECTION & RESPONSIBILITY

16. SANITARY PROVISIONS

17. OVERTIME BY CITY EMPLOYEES

18. NIGHT WORK AND SUNDAYS

19. RECORD DRAWINGS

20. SEWAGE AND WATER FLOWS ENCOUNTERED

21. POLLUTION CONTROL

22. CONTAMINATED OR HAZARDOUS MATERIAL

23. CONNECTION TO EXISTING WORK

24. SNOW REMOVAL

25. INCLEMENT AND FREEZING WEATHER CONDITIONS

26. FINAL INSPECTION AND CERTIFICATE OF COMPLETION

27. PAYMENT TO CONTRACTOR

28. FINAL PAYMENT AND LIENS

29. DISPUTES

30. ARBITRATION AND LITIGATION

31. PURCHASE ASSIGNMENT

32. QUALITY OF MATERIALS

33. DEFECTIVE MATERIALS

34. UNCOVERING AND CORRECTIVE WORK

35. PROTECTION OF THE WORK

36. CLEAN-UP

37. WORK STOPPAGES

38. SHEETING, SHORING AND BRACING

39. COMPLIANCE WITH LAW

40. TERMINATION FOR CONVENIENCE OF THE CITY

1. Selected Definitions

The following lists of selected definitions are included to supplement and amend those established in Section 1.01 of the reference specification "Form 816"; and said Section 1.01 is hereby made a part of this Article by Reference (including the abbreviations included therein).

Throughout these Contract Documents, the intent and meaning of the use of the following terms, or pronouns in place of them, shall be interpreted as follows (Note: the use of gender-specific pronouns or titles throughout the Contract Documents is for the sake of brevity, and are intended to refer to persons of either sex):

Bid - The offer or proposal of a Bidder submitted on the prescribed form, and in accordance with the provisions of the Bid Documents, setting forth the prices for the Project work.

Bid Documents - The documents, as issued by the Owner, enumerated in Article 3 of the Instructions to Bidders, from which, and in accordance therewith, the prospective Bidders are to base their respective Bids. All uses of the term "Contract Documents" shall be interpreted to mean the Bid Documents prior to Contract execution.

Bid item - An item of work specifically described in the Bid for which a price, either unit or lump sum, is provided.

Bidder - Any legal entity submitting a bid for the Project work.

Contract - The written agreement between the Owner and the Contractor regarding the prosecution of the Project work.

Contract Documents - The set of documents which form the written agreement between the Owner and the Contractor. The Contract Documents consist of the documents enumerated in Article 3 of the Contract together with any documents issued subsequent to the execution of the Contract which become a part of the Contract Documents in accordance with the provisions of said enumerated documents. All uses of the term "Bid Documents" shall be interpreted to intend and mean the Contract Documents following execution of the Contract.

Contract Drawings - The official drawings of any and every kind, or reproductions thereof, having been provided and/or approved by the Engineer, which show the location, character, dimensions, or details of the Project Work. Use of the term "**Drawings**" within these Contract Documents, or otherwise related to the Contract, shall refer to and mean the Contract Drawings.

Contract Price - As defined in Article 2 of the Contract. Use of the term "**Contract Amount**" within these Contract Documents, or otherwise related to the Contract, shall refer to and mean the Contract Price.

Contract Time - The number of calendar days allowed for completion of the Project as set forth by the Contract, plus any authorized time extensions. In case of a calendar date of completion being specified in the Contract in lieu of a number of calendar days, the Contract Time shall mean the period of time between the issuance of the Notice to Proceed and said calendar date; and the Project shall be completed by said calendar date. Use of the term "**Time of Completion**" within these Contract Documents or otherwise related to the Contract shall refer to and mean the Contract Time.

Contractor - The legal entity so designated in the Contract, and who shall undertake the prosecution of the Project work in accordance with the terms of the Contract Documents, acting directly or through a duly authorized representative. The Contractor shall have control over the Project Work and the prosecution thereof, subject to the applicable provisions of the Contract Documents.

Engineer - The Director of Engineering of the City of New Britain, also known as the "City Engineer", or the person duly acting in that capacity, acting directly or through his designated representative(s) to the extents defined by the Contract Documents.

Extra Work - Any Project Work not included in or contemplated by the Contract Drawings or Specifications, or any other Contract Documents, but found essential to the satisfactory completion of the Project within its intended scope. By this definition, extra work involves a change to the Project Work, and therefore is covered by Article 17 of the General Conditions. Extra work for which a Change Order is not established in accordance with the provisions of said Article 17 shall be considered as unauthorized work.

Form 816 - The State of Connecticut Department of Transportation "Standard Specifications for Roads, Bridges and Incidental Construction, Form 816" together with the most recent "Supplemental Specifications" thereto.

Improvement Plans - The set of Contract Drawings, as designated in Article 2 of the Special Provisions, which have been prepared by or for the Engineer, and approved thereby, to show work and facilities specific to the Project; and which have been included in the Bid Documents. The Improvement Plans are issued as a set, and are included in the Bid Documents and/or Contract Documents as such. Use of the terms "**Plans**" or "**Improvement Drawings"** within these Contract Documents, or otherwise related to the Contract, shall refer to and mean the Improvement Plans.

Owner - The City of New Britain, acting through the City Purchasing Agent, and represented by the Director of the City department for which the Project is being performed, or his authorized representative.

Project - All activities and work contemplated and/or completed in association with the construction, modifications, repairs, and removal of facilities and/or features designated within and intended by the Contract Documents.

Project Site - The physical location of the facilities and/or features to be constructed, modified, repaired, or removed under the Project, and the area surrounding the same that is reasonably necessary for such construction, modifications, repairs, or removal. The construction limit lines as designated on the Improvement Plans, if so designated, define the limits of the Project Site.

Project Work - The furnishing of all labor, materials, equipment, and incidentals necessary or convenient to the successful completion of the Project and the fulfillment of the duties and obligations imposed upon the Contractor by the Contract Documents.

Specifications - The minute descriptions of the details of the construction of various aspects of the Project Work which serve to complement the Contract Drawings. Such descriptions include, but are not limited to, the type, quality, and quantity of materials to be used, the methods and manner of performance of the work to be used, and the methods of measurement and payment to be used for the Project Work.

The Specifications consist of the **Special Technical Specifications**, a set of specifications created and/or compiled specifically for this Project; the **Reference Specifications**, as designated in Article 29 of the Instructions to Bidders; and any other document, or appropriate portion thereof, issued to the Contractor by the Engineer which serves the function of a specification as defined in the preceding paragraph.

Standard Specifications - The most recent edition of the "City of New Britain Standard Specifications for Municipal Construction"

Supervision - Where used to indicate supervision by the Engineer, supervision shall mean, and be limited to, the performance of obligations imposed upon and the exercise of rights granted to the Engineer by the Contract Documents, specifically including, but not limited to, those set forth in Articles 4 and 5 of these Supplemental General Conditions.

Where used to indicate the supervision by the Contractor, supervision shall mean the Contractor exercising his control over and proper superintendence of the Project Work and performing his obligations and responsibilities as set forth by the Contract Documents with respect to the Project Work and the prosecution thereof.

Unauthorized Work - Any work performed by the Contractor in association with the Project which qualifies as, is considered as, or is designated as unauthorized in accordance with the provisions of the Contract Documents. The Owner reserves the right to accept, make payment for, reject, and/or to order the Contractor to remove, repair, and/or replace all such work at his sole option. The Contractor shall be liable for

any and all expenses associated with the inspection, removal, repair, and/or replacement of unauthorized work.

2. Insurance Requirements

The Contractor shall not commence work under this contract until he has obtained all necessary insurance and has filed certificates of insurance with the City. Each insurance policy shall contain a clause providing that the City must be notified sixty (60) days in advance in the event of any restrictive amendment, cancellation, or non-renewal.

Insurance must be in effect for the whole duration of the contract and for 2 years following acceptance of the work by the City.

Failure to provide the required insurance and certificates may, at the option of the City, be held to be a willful and substantial breach of this contract.

The contractor agrees to maintain insurance in force at all times during which services are to be performed, as well as to provide original, completed certificate(s) of insurance to the Acting Purchasing Agent evidencing the following coverages from an insurance company(ies) licensed by the State of Connecticut which have at least an “A-VIII” policyholders rating according to BEST Publications’ latest edition of their Key Rating Guide:

Commercial General Liability:

General Aggregate	$2,000,000
Products/Completed Operations Aggregate	$2,000,000
Occ. Occurrence	$1,000,000

Automobile Liability:

Liability Limit	$1,000,000

Umbrella Excess Liability:

Each Occurrence	$1,000,000
Aggregate	$1,000,000

Worker’s Comp. and Employer’s Liability:

$500,000 each accident
$500,000 disease policy
$500,000 disease accident limit

"The City of New Britain and the Consolidated School District and their agents, officials, and employees” must be named as “Additional Insured”, on all policies except Workers Compensation and to provide a Waiver of Subrogation on all policies. The Contractor agrees to provide replacement/renewal certificates at least 60 days prior to the expiration of the policy. Should any of the above described policies be cancelled before

the expiration date, written notice must be made to the City 60 days prior to cancellation. The Contractor agrees to name the City as Additional Insured on all insurance policies, except Workers Compensation and to provide a Waiver of Subrogation on all policies.

These insurance certificates and the Waiver of Subrogation must be presented to the Purchasing Agent prior to execution of the contract or issuance of the purchase order.

HOLD HARMLESS AGREEMENT: The Contractor, its agents and assigns shall indemnify and hold harmless the City of New Britain, including but not limited to, its elected officials, its officers, and agents, ("the City") from any and all claims made against the City, including but not limited to, damages, awards, costs and reasonable attorney fees, to the extent any such claim directly and proximately results from the wrongful willful or negligent performance of services by the Contractor during the Contractor's performance of this Agreement or any other Agreements of the Contractor entered into by reason thereof. The City agrees to give the Consultant prompt notice of any such claim and absent a conflict of interest, an opportunity to control the defense thereof.

Failure to provide the required insurance and certificates may, at to option of the City, be held to be a willful and substantial breach of this contract.

3. Minimum Wage Requirements

The Contractor shall pay all tradesmen and laborers hired to perform work under the Contract not less than the prevailing Federal (if applicable) and State of Connecticut wage rates, including benefits, as set forth in the Bid Requirements and Conditions Document.

4. Engineer - Authorities and Duties

All work performed under this Contract is subject to the supervision of the Engineer on behalf of the Owner. The Engineer has the authority to enforce compliance with the Contract Drawings, Specifications, and all other Contract Documents, in all respects.

The Engineer shall decide all questions and disputes regarding the interpretation of the Drawings, Specifications, and other Contract Documents; as well as those regarding the quality and acceptability of materials furnished, work performed, manner of performance, rates of progress, and compliance with and acceptable fulfillment of all terms of the Contract, including compensation due thereunder. The Engineer shall also have the authority to, at his discretion; determine the points and times at which the Contractor may begin various aspects of the work and the order in which the work shall be prosecuted when the specific determination of the same is deemed to be in the best interest of the Owner.

The Engineer shall determine the amount and quality of work successfully completed by the Contractor at any time. His estimate of such completed work shall be basis for all payments by the Owner to the Contractor as compensation for Project Work completed.

All estimates and decisions of the Engineer shall be conclusive and final, except as otherwise expressly provided in the Contract Documents. In the case of the dispute of any estimate and/or decision of the Engineer by the Contractor, and proper assertion of the same in accordance with Articles 29 and 30 of these Supplemental General Conditions, such estimates and decisions of the Engineer shall not be final, but shall control until the subject dispute is properly and finally resolved. All directions of the Engineer shall be promptly and diligently carried out by the Contractor.

The Engineer shall also have all other authorities and duties as stated in the Contract Documents.

For certain projects, the Director of Engineering may designate, in writing to the Contractor, a Project Engineer, who shall be a supervisory staff person of the Bureau of Engineering. The Project Engineer shall have the authority to act as and for the Director of Engineering in all matters governed by the Contract Documents, with the exception of the Acceptance and Award of Contract and the issuance of the Certificate of Completion.

For all projects, the Director of Engineering shall designate a Project Inspector. The authorities and duties of the Project Inspector shall be as stated in Article 5 of these Supplemental General Conditions. The Engineer shall also enjoy all powers and authorities granted to the Project Inspector by said Article 5, and otherwise granted by the Contract Documents.

5. Inspection

All materials furnished, equipment, facilities, and methods used, and work performed by the Contractor under this Contract, including any sampling and testing deemed necessary by the Engineer, is subject to inspection by the Project Inspector, and to the approval of the Engineer. The Contractor shall cooperate in all respects and provide any assistance and/or facilities as requested in the Project Inspector's efforts to perform such inspections. The Project Inspector is performing his duties under the direction of the Engineer and solely at the behest of and on behalf of the Owner; and solely for the purpose of protecting the Owner's interest in having the Project work performed in accordance with the Contract Documents.

The presence of the Project Inspector, or lack thereof, at the project site, or the inspection, or lack thereof, by the Project Inspector of any Project work performed by the Contractor, does not in any way release the Contractor from, or in any way alter, his responsibility for strict compliance with all requirements of the Drawings, Specifications, and other Contract Documents. In case of any dispute arising between the Contractor and the Project Inspector regarding the materials furnished, the manner of performing

the work, or any other matter relating to the Contractor's compliance with the Contract Documents which may adversely affect work in progress, the Project Inspector has the authority to reject the material or stop the work until the question at issue can be referred to, and decided by, the Engineer. The Project Inspector is not authorized to revoke, alter, enlarge, relax or release any requirements of the Contract Documents or to approve or accept any portion of the work, or to issue instructions contrary to the Contract Documents. The Project Inspector shall in no case act as foreman or perform other duties for the Contractor. Any advice which the Inspector may give to the Contractor shall not be construed as binding the Engineer nor the Owner in any way, nor as in any way releasing the Contractor from fulfillment of the terms of the Contract Documents.

The Contractor shall keep the Project Inspector properly notified, to the satisfaction of the Project Inspector, of the time and place that he intends to perform any aspect of the work. Prior to commencing the Project Work, or any subject portion thereof, the Contractor shall obtain from the Engineer either directly or through the Project Inspector pertinent information and requirements regarding the level, methods, and frequency of inspection anticipated for any aspect of the work. The Contractor shall fully comply with the same and shall make adjustments to his scheduling and methods for the work accordingly. The Engineer may change said level, methods, and frequency of inspection required for any aspect of the work at any time as deemed fit to adjust for actual levels and variations in the material conditions, working conditions, or workmanship; and the Contractor shall comply with any such changes.

The Engineer may not deem it necessary for the Project Inspector to be present at the project site at all times when project-related activities are taking place. The Contractor is reminded, however, that all work performed is subject to inspection and of his obligation to comply with the inspection requirements set forth in the previous paragraph. Any work performed in the absence of the Project Inspector is done at the Contractor's own risk, and shall be considered unauthorized. The Contractor is especially cautioned regarding the performance of unauthorized work which may not be readily inspected at a later time, including, but not limited to, underground utility installations, placement of base, fill and backfill, and concrete reinforcing and form work; and regarding the performance of subsequent work which may render previously performed unauthorized work difficult to inspect, or which may have to be removed and replaced in order to correct previously performed unauthorized work which may be found unacceptable by the Engineer.

The Contractor shall deliver, or have delivered, promptly to the Project Inspector copies of all written correspondence relating to the project from the Contractor. All oral correspondence between the Contractor and the Engineer regarding the project shall be directed through the Project Inspector, be conducted in the presence of the Project Inspector, or specific arrangements must be made between the Contractor and the Engineer to inform the Project Inspector of the proceedings of the correspondence.

6. Superintendence by Contractor

The Contractor shall, at all times during the occurrence of project activities, have present at the project site, as the Contractor's agent, a competent representative thoroughly experienced in the type of work being performed, who shall be termed the "Project Superintendent".

The Project Superintendent shall have full authority to act for the Contractor in supervision of the Project Work as well as in all other matters relating to the Project Work, to receive directions and orders from the Engineer, to promptly execute and carry out said directions and orders within the terms of the Contract Documents, and to supply all materials, equipment, tools, labor, and incidentals as may be required to appropriately perform the Project work. If the Contractor chooses, an alternate representative to act in place of the Project Superintendent in his absence may be designated. Said alternate shall have similar qualifications and equal authority to act as the Contractor's agent as does the Project Superintendent and all references to the Project Superintendent herein apply likewise to the alternate when acting in such capacity.

The Project Superintendent and alternate are subject to the review of the Engineer. The name and qualifications of the proposed Project Superintendent and alternate shall be submitted to the Engineer prior to the commencement of work under the Contract by the Contractor. The Project Superintendent and alternate shall have the appropriate training and knowledge to be considered a "competent person" under the OSHA standards, regulations, instructions, and/or other guidelines applicable for, as a minimum, excavations and confined spaces.

The Project Superintendent shall remain in that capacity for the entirety of the Contract, or until his termination of employment with the Contractor or until his removal from such capacity is agreed to, in writing, by the Engineer. Should the Project Superintendent leave the employment of the Contractor, or otherwise be relieved of his duties as Project Superintendent, during the Contract, the alternate, if designated, shall become the Project Superintendent. If no alternate has been designated, the Contractor shall propose a new Project Superintendent to the Engineer for review through the proper submittal.

In the event that the Project Superintendent is absent from the project site, or cannot be rendered present at the location of certain subject work in a reasonable time, the Project Inspector has the authority to halt for reason of lack of superintendence, and until such time as proper superintendence is again provided, any work for which he may question the materials, workmanship, or other factor which may result in a final product not meeting the requirements of the Contract Documents. Any work performed while the Project Superintendent is absent from the project site shall be considered unauthorized due to lack of superintendence; and, therefore, the Contractor will be due no additional compensation for any additional work, down time, or delays as a result

thereof, including any additional work, delays, or down time which may be a result of the Project Inspector halting work in accordance with this Article.

If, in the opinion of the Engineer, a communication problem develops between the Project Superintendent and the Project Inspector due to a language barrier, the Contractor shall take all steps deemed necessary by the Project Inspector, including providing a qualified interpreter, to resolve the problem to the satisfaction of the Project Inspector.

7. Character of Workers, Methods, and Equipment

The Contractor shall at all times employ sufficient labor and equipment for prosecuting the several classes of work to full completion in the manner and time required by the Contract Documents.

All workers shall have sufficient skill and experience to perform properly the work assigned to them, including the operation of equipment and other specialty or skilled tasks. Any person employed by the Contractor who, in the opinion of the Engineer, does not perform his work in a proper and skillful manner, or who is intemperate, disorderly, or non-courteous toward the public, or who in any way endangers person or property by performing his duties with less than appropriate care, shall, at the direction of the Engineer, be removed from the job forthwith by the Contractor, and shall not be employed again on any portion of the work without the written approval of the Engineer. Upon request, the Engineer shall confirm in writing any such oral direction.

The Contractor shall neither permit nor allow the introduction or use of intoxicating liquors or drugs upon or about the project site by any persons under their control or responsibility during performance of project work; nor shall they permit or allow any person under their control or responsibility to perform any project work while under the influence of any intoxicating liquor or drug.

All equipment used on the work shall be in safe operating condition and shall be capable of performing its intended uses safely. The Contractor is solely responsible for the safety of all equipment used on Contract work and the manner in which it is used.

All equipment which is proposed to be used on the work shall be of sufficient size and in such mechanical condition as to meet the requirements of the work and to produce a satisfactory quality of work in a timely manner. Equipment used on any portion of the project shall be such that its use or transportation will not cause any damage or injury to roadways or property; and shall be in accordance with all applicable laws, regulations, and restrictions. The Contractor shall remove no plant, materials, equipment, or other facilities from the project site without the Engineer’s permission.

When the methods or equipment to be used by the Contractor in accomplishing the various aspects of the construction are not specified in the Contract Documents, the Contractor is free to utilize any methods or equipment that will accomplish the Project

work in conformity with the requirements of the Contract Documents. When the methods or equipment anticipated or proposed for use by the Contractor are other than may be specified in the Contract Documents or are other than is standard practice in Connecticut, or when the Engineer may inquire as to the methods or equipment anticipated for use, the Contractor shall demonstrate to the satisfaction of the Engineer that the subject methods or equipment will accomplish the Project work in conformity with the Contract Documents by means including, but not limited to, providing references, documentation, and demonstrations. Should the Engineer deem that any method or equipment in use by the Contractor is not satisfactory, i.e. that it does not, or will not, result in work conforming with the Contract Documents, the Contractor shall cease using the subject method or equipment and shall propose an alternative to the Engineer's satisfaction.

Should the Contractor continue to use any method or equipment subsequent to being notified of the Engineer's deeming the same not satisfactory, any work resulting or affected thereby shall be considered unauthorized subject to all restrictions and limitations accorded unauthorized work by the Contract Documents.

In the event the Contractor fails to remove from the Project site any person or unsafe equipment as required by the Engineer, or fails to furnish suitable and/or sufficient personnel for the proper prosecution of the work, the Engineer may suspend the work by written notice until such orders are complied with.

8. Subcontracting

(a) In all matters relating to the Contract and enforcement of the provisions of the Contract Documents, with the exception of subarticles (c), (d), and (e) below, any subcontractors utilized to perform Contract work shall be considered employees of the Contractor; and their work shall be subject to the provisions of the Contract Documents as such. Any use of the term "subcontractor", or reference to subcontractors or subcontracting contained in the Contract Documents is strictly for convenience of the Owner and Contractor in distinguishing between regular employees of the Contractor and legal entities subcontracted by the Contractor to specifically perform work on this Project.

(b) In accordance with the preceding paragraph, the Contractor shall be responsible for the performance, finished products, acts and omissions of his subcontractors, and of persons either directly or indirectly employed thereby, in all respects in matters relating to the Contract and applicable provisions of the Contract Documents.

(c) Prior to execution of the Contract, the Contractor shall furnish the Engineer with a list of all subcontractors proposed to perform work on the Project, together with the extents of the work to be performed thereby. Accompanying the list, the Contractor shall include a statement of qualifications, including related

experience and listing projects involving similar work successfully completed, for those subcontractors proposed to perform major categories of the Project Work.

(d) The Engineer has the authority to reject, for reason of insufficient experience, unsatisfactory past performance, or any other legitimate reason which may bring into question the proposed subcontractor's successful performance of the subject work, the use of any specific subcontractor to perform Project work; and the Contractor shall abide by the same. The Contractor shall provide the Engineer with any additional information requested to assist in the evaluation of the proposed subcontractors.

(e) The Contractor shall maintain said list of subcontractors up-to-date throughout the Project; and shall provide the Engineer with an updated copy in every instance that said list is revised. Any proposed changes to the list, following Contract execution, shall be submitted to and approved by the Engineer prior to any subcontractor not listed on the current active list held by the Engineer performing any Project work. The Engineer may require information as set forth in subarticles (c) and (d) above to assist in his evaluation of any additional subcontractors or duties proposed to be added to the list, and the Contractor shall supply the same.

(f) Nothing contained within the Contract Documents shall create, is intended to create, or should be construed to create a contractual relationship of any kind between the Owner and any subcontractor.

9. Construction Surveying / Layout

Unless otherwise designated in the Special Provisions, the Contractor is responsible for all construction surveying, staking, and layout as is necessary and/or is typically required for the prosecution of the work in accordance with the Contract drawings and specifications. The Engineer shall establish bench marks, base lines, and reference points as deemed necessary by the Engineer for the Contractor to meet this responsibility. The Contractor is liable for the protection of said bench marks, base lines, and reference points, as well as for any existing property corner markers located within the project site; and the Engineer shall reset or replace, at the Contractor's expense, any of the same that are removed, lost, destroyed, or in any way damaged or disturbed during the prosecution of the Project Work. The Contractor assumes full responsibility for the accuracy, relative to the provided bench marks, base lines, and reference points, for all dimensions and elevations measured and/or derived from the same; and it is the Contractor's responsibility to verify all such dimensions and elevations.

If so called for in the Special Provisions, the Contractor shall designate a Project Surveyor. The designation thereof, and the associated functions, duties, and responsibilities thereof, shall be in accordance with the provisions of the subject Article of the Special Provisions.

Except where separate bid items are included for all or portions of such work, all construction surveying and layout work shall be considered as included in, and incidental to, the prices bid for the various bid items in the Contract Documents.

10. Permits and Regulations

The Contractor shall procure and pay for all permits and licenses necessary for the execution of his work and the use of such work when completed.

The Contractor shall comply with all laws, ordinances, rules and regulations relating to the performance of the work, the protection of the adjacent property and the maintenance of passageways, guard fences or other protective facilities.

The Contractor shall, at his own expense, secure and pay to the appropriate departments (Board of Public Works, New Britain Water Department, Building Department) of the City of New Britain or State of Connecticut, the fees or charges for all permits for street excavations, pavements, sidewalks, curbs, sealing of house connection drains, pavement cuts, building, electrical, plumbing, water, subway (underground electric and telephone) and sanitary and storm water sewer permits required by the regulatory body of any of its agencies. The Contractor's attention is called to the fact that the City Engineer's office has a list of all State maintained streets which is readily available to the Contractor for inspection.

The Contractor shall comply with the applicable local laws and ordinances governing the disposal of surplus excavation, materials, debris and rubbish on or off the Project Area and commit no trespass on any public or private property in any operation due to or connected with the improvements embraced in this Contract.

11. Access Considerations

The Contractor shall conduct his work at all times and use all practical means available to minimize the interference to traffic, both vehicular and pedestrian, and the inconvenience and discomfort of adjacent residents and property owners and the general public. Except as otherwise provided for in the Special Provisions, vehicular access, as may be restricted by the prosecution of the Project work, will be maintained at all times to all adjacent or abutting properties, except when necessary construction precludes such access for reasonable periods of time. Pedestrian access shall be maintained to all adjacent or abutting properties at all times. Emergency access to all structures and emergency facilities shall be maintained at all times. In the event that Construction activities cause vehicular access to any property to be interrupted for more than, in the opinion of the Engineer, a reasonable time, the Contractor shall construct, or make other arrangements for, reasonably equivalent access to such property to the satisfaction of the Engineer.

In the maintenance and protection of traffic, the Contractor shall abide by, in order of preference and subject to all applicable laws, 1) the rules, regulations, and directions of the New Britain Police Department, 2) the applicable provisions of the most recent edition of the "Manual on Uniform Traffic Control Devices for Streets and Highways", (MUTCD) and any supplements thereto, as published by the Federal Highway Administration of the U.S. Dept. of Transportation, 3) any directives of the Engineer, and 4) the applicable provisions of the Contract Documents.

The Contractor shall supply, maintain, and incorporate into the Project such barricades, warning lights, and directional, informational, warning, construction, and other signage, as well as any other safety precautions, as may be required, necessary, or prudent for the protection and safety of person, property, Project work and workers; and as may be required, necessary, or prudent to the maintenance of traffic flows and access in clear and convenient means (as is practical). The Contractor is referred to said MUTCD regarding the proper selection, placement, and usage of many such devices and precautions.

The Contractor is hereby notified that the New Britain Police Department may require the presence of police officers for the purpose of safety and traffic control at any location where construction activities affect a public street and the flow of traffic thereon. The Contractor is responsible for 1) contacting the traffic division of the Police Department at 826-3000 to properly notify them of the pending construction to determine what level of police presence may be required and arranging for the same, and 2) paying all costs to the Police Department for the same. Unless the necessity for police presence was not contemplated in the Project at the time of Contract execution, or by any Change Order thereafter, and is the result of the Contractor’s actions or inactions, the Contractor shall be appropriately reimbursed for all such costs by the Owner.

The Contractor shall cooperate with the various parties involved in the delivery of mail, school transportation, and the collection and removal of trash and recyclables to maintain existing schedules for these services.

If a bid item for "Maintenance and Protection of Traffic" and/or other related bid items are included in the Contract, all work required or performed, and the associated expenses incurred, in accordance with the provisions of this Article are considered to be included as a part of such bid items. If there are no such bid items, or if the project is bid lump sum, all work required or performed, and the associated expenses incurred, in accordance with the provisions of this Article are considered to be part of the project work as bid, and therefore are considered as included in the price bid for the various Bid items. The Contractor shall be due no additional compensation as a result of any work performed or expenses incurred in accordance with this Article.

12. Protection of Person and Property

The Contractor is responsible and liable for the protection and care of persons and property from harm or injury within the Project Site and otherwise related to his prosecution of the Project Work. The Contractor shall exercise proper precaution at all times for said protection and care of persons and property from harm or injury as a result of the Contractor's actions, or inactions, both on and off the Project site.

The Contractor shall at all times comply with the provisions of all applicable Federal, State, and local safety and health laws, codes, and regulations; and shall take such additional safety and health measures he may determine to be necessary for said protection and care, as well as any such measures that the Engineer may deem to be reasonably necessary.

At all times, as required by any applicable OSHA standards, regulations, instructions, and/ or other guidelines, the Contractor shall have at the site of any excavation, confined space, or any other aspect of the Project work regulated thereby, an employee or other authorized representative having the appropriate training, knowledge, and authority to be considered a "competent person" regarding such work under said OSHA standards, regulations, instructions, and/or other guidelines.

The Contractor shall install and maintain such barricades, fences, and other protective and warning facilities and measures, and shall employ such methods and means, as may be appropriate, required, and/or directed, to protect person and property from excavations, equipment, stored materials, slopes, ditches, flowing water or sewage, exposed utilities, and/or other aspects of the work which may pose a hazard.

All applicable aspects of the Project shall be in accordance with the safety provisions of the "Manual of Accident Prevention in Construction" as published by the Associated General Contractors of America, to the extent said provisions are not in conflict with applicable laws or regulations. Said safety provisions are hereby made a part of this Article by reference.

To the extent possible, the Contractor shall plan the work in such a manner as to avoid the use of explosives in the close proximity structures or utilities. When the use of explosives is necessary for the prosecution of the work, the Contractor shall use the utmost care not to endanger person or property, and shall comply with the requirements of all applicable laws, codes, and regulations. The Contractor is responsible to notify all nearby property owners, the owners of nearby utilities, and all others who may be affected, of the Contractor's intention to use explosives on the project; and such notice shall be given sufficiently in advance of the use of the explosives as to allow the noticees and the Contractor to take any actions deemed necessary for protection of person and property. Such notice shall not relieve the Contractor from responsibility for any damage and/or claims resulting from blasting operations.

The Contractor shall be held responsible for, and required to make restitution at his own expense for, any and all damage to person or property resulting from any act, omission, carelessness, or neglect on the part of the Contractor, or the agent or employees thereof, during the prosecution of the work, or lack thereof, and until its final acceptance.

The Contractor shall maintain an accurate record of all cases of death, occupational disease, and/or injury requiring medical attention or causing loss of time from work, and/or all cases of property damage, occurring as a result of or in the course of the prosecution of work under this Contract. The Contractor shall promptly furnish the Engineer with reports concerning these matters.

The Contractor and his actions shall also be subject to the provisions of Section 1.07.09 of the Reference Specification "Form 816"; and said Section 1.07.09 is hereby made a part of this Article by reference.

All work performed or required, and the associated expenses incurred, in accordance with the provisions of this Article are considered part of the project work as bid, and therefore are considered as included in the price bid for the various Bid items. The Contractor shall be due no additional compensation as a result of such work performed or expenses incurred.

13. Subsurface Conditions

The Contractor is responsible for performing whatever research and/or investigations deemed appropriate for determining the existing soil, groundwater, or other subsurface conditions which may have bearing on the Project work prior to submitting a bid on the Project (reference Article 10 of the Instructions to Bidders). Any information regarding borings, test pits, or other soils or subsurface conditions included in the Contract Documents is provided solely as a courtesy to be used as seen fit by the Contractor; and does not in any way relieve the Contractor of any responsibilities stated in the Contract Documents. The Contractor will not be granted any additional compensation, or any other extra, for any additional work or costs associated with subsurface conditions which could have been reasonably expected to exist and/or to interfere with, or otherwise affect, the Project work in any way.

14. Existing Conditions Found Different

In addition to showing the construction proposed under this Project, the drawings show certain information obtained by the Owner regarding conditions and features which exist at the site of the work, both at and below the surface of the ground.

The Owner and the Engineer expressly disclaim any responsibility for the accuracy or completeness of the information given on the drawings with regard to the existing conditions and features and the Contractor will not be entitled any extra compensation on account of inaccuracy or incompleteness of such information except as provided

herein. It is specifically called to the Contractor's attention that all services, laterals, etc., are not shown on the Contract Drawings and it shall be his responsibility to locate and protect the same. The information which is shown is only for the convenience of the Contractor, who must verify this information to his own satisfaction. The giving of this information upon the Contract Drawings will not relieve the Contractor of his obligations to support and protect all existing utilities, structures and fixtures, which may be encountered during the construction of the work and to repair any and all damages done to such existing utilities.

The Contractor shall immediately notify the Engineer of any existing or latent conditions encountered during the prosecution of Project work which are significantly different from those shown or described in the Contract Documents or from those expected by the Contractor, and/or which may affect or alter the Project work in any way contrary to the Plans and Specifications; and shall, upon such encounter, immediately suspend all work relating to, or affected or altered by, said different conditions.

The Engineer shall thereupon promptly investigate said conditions and, if the conditions are found to be substantially different, shall give such advice and/or instructions, and shall make such adjustments and/or alterations to the Drawings, Specifications, proposed work, quantities, and/or compensation due to the Contractor, as deemed appropriate and/or necessary, and in a manner consistent with the applicable provisions of the Contract Documents. The Contractor shall not resume the performance of any work suspended in accordance with the provisions of this Article until being instructed to do so by the Engineer.

Any work associated with existing conditions found different which is performed by the Contractor and which is, in the opinion of the Engineer, in non-compliance with the provisions of this Article shall be considered unauthorized. Any such unauthorized work shall not be considered to be extra work nor shall any additional compensation be due the Contractor therefor, except as otherwise determined by, and at the sole discretion of, the Engineer.

15. Existing Underground Utilities - Protection and Responsibilities

The Contractor must notify Call Before You Dig (Tel. 1-800-922-4455) in accordance with Public Act No. 81-146 & 77-350 at least forty-eight (48) hours prior to start of construction, and shall keep such notification properly updated as the prosecution of the Project work proceeds.

The Contractor should inquire of the Water Department of the City, Southern New England Telephone Company d/b/a AT&T, Northeast Utilities (Helco & CL&P), Connecticut Natural Gas Corporation, Farmington River Power Company, Comcast Cable Communications, the City Public Works Department and any other public utility companies as to the locations of their facilities, particularly house service pipes, in the vicinity of his trenches and mark or cause to have marked on the site the locations of such pipes, etc. For the guidance of his employees and so that damage to such pipes

may be avoided. The Contractor shall protect water pipes from freezing at all times during cold weather.

The Contractor prior to opening an excavation shall make every effort to determine whether underground installation, i.e., sewer, water, fuel, electric lines, etc., will be encountered and if so, where such underground installations are located. When the excavation approaches the estimated location of such an installation, the exact location shall be determined by careful probing or hand digging, and when it is uncovered, proper supports shall be provided for the existing installation. The Contractor shall, without expense to the City, do everything necessary to provide proper support, protect and maintain from direct or indirect injury all utilities, pipes, bridges, conduits, sewers, drains, wires, poles, or fixtures of all kinds lawfully in the line of excavation or adjacent thereto, and all fences, walls, buildings or other structures and property in the vicinity which may be damaged by the work herein contemplated. He shall give at least 24 hours notice, before breaking ground, to the owners of the structures, pipes or wire conduit that may be affected by his operations and shall not cause any hindrance to or interference with any such owners or their agents in protecting or repairing their property should they wish to do so, but will suffer them to take all such measures as they may deem necessary for said purpose.

The Contractor shall be responsible for the repair of or the replacement of any underground utilities, laterals or mains broken or damaged and any costs for maintenance service while line is out of service along the course of construction. Omissions or improperly located utility lines on the contract drawings will not be cause to hold the Owner liable.

The Engineer may require the Contractor to take proper steps to protect the main lines of public utilities in the immediate vicinity of the work when endangered by the operation of the Contractor, and, if the Contractor fails to take adequate provisions to protect such lines or structures the Engineer may employ others to perform protective work, as may be reasonably needed, at the Contractor's expense.

Guard rails, posts, guard cables, signs, poles, markers, mail boxes, fences, wall and stone walls, etc., which are temporarily removed to facilitate construction, shall be replaced and restored in their original condition to the satisfaction of the Owner or Engineer.

16. Sanitary Provisions

The Contractor shall provide an approved field toilet to maintain a neat and sanitary condition on the job site. The Contractor shall commit no public nuisance. These facilities shall be cleaned regularly and in all ways comply with the State and City Health Regulations. The Contractor shall provide a safe drinking water supply for use of all working personnel on the work site including the construction inspector.

17. Overtime by City Employees

In addition to any license or permit fees that may be required by the ordinances of the City of New Britain or by the rules or regulations of any department thereof, any person, firm or corporation or combination of them, who shall perform any work on any Saturday, Sunday, legal holiday or any other day when City departments are not working or who shall perform any work on any day at such times as to necessitate the employment of City personnel outside the hours of the normal eight (8) hour working shift for the assigned employee(s) in any day or forty (40) hours per week, shall pay to the City of New Britain or the proper department thereof any extra costs of inspection, supervision or employment of City personnel incurred by said City of New Britain or any department thereof.

The City of New Britain's recognized paid holidays are as follows: New Year's Day, Martin Luther King, Jr. Day, Lincoln's Birthday, Washington's Birthday, Good Friday, Memorial Day, Independence Day. Labor Day, Columbus Day, Veterans' Day, Thanksgiving Day, the day following Thanksgiving, Christmas Day and any holiday officially proclaimed as such by the Congress of the United States or the Legislature of the State of Connecticut. Holidays falling on a Saturday will be celebrated on the preceding Friday, holidays falling on a Sunday will be celebrated on the following Monday.

18. Night Work and Sundays

Night work or work on Saturdays, Sundays or legal holidays requiring the presence of an inspector will be permissible upon the approval of the Engineer except in emergencies. Should night work be permitted, required or desired to operate continuous night work or for emergency night work, the lighting, safety and other facilities which are deemed necessary for performing such night work shall be provided by the Contractor and comply with the applicable safety codes. Night work, work on Saturdays, Sundays or legal holidays, if performed, the Contractor shall receive <u>no</u> extra payment, but compensation shall be considered as having been included in the prices stipulated for the appropriate items of work as listed in the bid.

19. Record Drawings

Unless otherwise designated in the Special Provisions, the Contractor shall be responsible for preparing various record drawings for the City's files. These drawings shall be executed in the manner specified in the edition of the "City of New Britain, Bureau of Engineering, and Requirements for As-Built Maps" current at the time this Contract was entered into. Typical maps and copies of the current standards are available for review and purchase at the Bureau of Engineering.

20. Sewage and Water Flows Encountered

The Contractor shall furnish all equipment and take all precautions and steps necessary and appropriate for conveying and perpetuating, in their entirety, all sanitary sewage, storm, groundwater, surface water, and flood water flows encountered in the prosecution of the Project Work in a safe, sanitary, and non-degrading manner. Such work includes, if necessary and appropriate, but is not limited to, furnishing, installing, and operating pumps and conduits, constructing coffer dams, diversion channels, and sumps, the blocking of conduits, and other means and methods used for such purposes.

Sanitary sewage flows shall be conveyed in a closed conduit and shall only be discharged into the City's sanitary sewer system. Under no circumstances shall the contractor willfully allow sewage flows to discharge to the storm drainage system, surface drainways, or any surface water.

Water discharged to the storm drainage system, any surface drainway, or any surface water shall be in accordance with the regulations and standards of the Connecticut Department of Environmental Protection and/or any other regulating authority. In addition, the discharge of water onto private property is only allowed with the prior written permission of the subject property owner and the Engineer.

All aspects of handling sewage and water encountered during prosecution of the Project work is subject to the supervision and approval of the Engineer. Any approval or intervention of the Engineer in such matters in no way relieves the Contractor of any of his responsibilities to comply with any and all applicable laws, regulations, permits, orders, and/or directives established or given by a regulating authority, and/or the safe perpetuation of any such flows.

The Contractor is responsible for knowledge of and compliance with all aspects of any laws, regulations, permits, orders, and/or directives established or given by a regulating authority relating to the handling of sewage and water flows associated with the Project. The Contractor is responsible for obtaining all approvals, and for performing all sampling, testing, and/or analyses, which may be required by the same.

The Contractor is also responsible for any damages to any facilities or properties as a result of his efforts to handle sewage and water encountered, and for the complete restoration of the same upon the completion of any measures which affected the facility or property.

Except where a separate bid item (or items) is included in the Contract Documents for such work, all work and other aspects of handling water and sewage flows shall be considered as included in, and incidental to, the prices bid for the various bid items in the Contract Documents. The Contractor will not be granted any additional compensation, or any other extra, for any work or other aspect of handling water and sewage flows which could have been reasonably expected to be required or necessary

in the prosecution of the Contract Work, or which is a result of the Contractor's actions, lack of action, negligence, or failure to comply with any aspect of this Article, or any other provision of the Contract Documents.

21. Pollution Control

The Contractor shall conduct his operations in conformity with all applicable permits, regulations, and standards of the Connecticut Department of Environmental Protection, and any other Federal, State, or local agency or authority having jurisdiction thereover, concerning water, air, and noise pollution and the handling and disposal of toxic or hazardous materials.

Pollution control measures shall apply to all contractor activities including, but not limited to, the construction site, waste and disposal areas, borrow sites and gravel banks, storage areas, haul roads, access roads, and detours.

In case of the failure on the part of the Contractor to perform pollution control work in a timely manner, the Engineer may, upon 48 hours' written notice, arrange for the performance of the subject work by approved forces, and the cost thereof will be deducted from any monies due, or which may become due, the Contractor under the Contract. In the case of an emergency the Engineer may take such actions immediately upon what he considers to be failure of the Contractor to perform pollution control work in a timely fashion.

(a) Water Pollution Control Measures - The Contractor shall exercise every reasonable precaution throughout the life of the contract to prevent, control and abate siltation, sedimentation and pollution of all surface waters, underground water systems and inland wetlands. The City of New Britain will obtain all permits which may be required concerning inland wetlands and watercourses for work appearing on the plans. The Contractor shall obtain any permits and pay any fees required for work not included on the plans in the fulfillment of his contract concerning the removal of material, depositing of material in, obstruction of, construction within, altering or polluting of any inland wetland, tidal wetland, coastal or navigable water, streams, ponds, lakes, water supplies or other water bodies.

Construction operations in water areas shall be held to a practicable minimum and shall be restricted to those areas which must be entered for the planned construction and for temporary operations pursuant thereto. The frequent fording of live streams shall be avoided during the construction and the use of temporary bridges or culverts is preferred. Mechanized equipment shall not be operated promiscuously in live streams. Roiling of waters shall be cause for the construction of diversion dikes or settling basins to avoid sediment problems.

The banks and beds of waterways and impoundments shall be properly cleared of all debris, falsework and obstructions placed therein or caused by the construction operations, but which are not a part of the planned improvement.

The dumping of oil or other deleterious materials on the ground is expressly forbidden. The Contractor shall provide a means of catching and retaining drained oil, removed oil filters, or other deleterious materials and of properly disposing of same, subject to the approval of the Engineer.

(b) Air Pollution Control Measures - The Contractor shall exercise every reasonable precaution throughout the life of the contract to safeguard the air resources of the State by Controlling or abating air pollution as set forth by the Department of Environmental Protection's regulations. These measures shall include the control and abatement of dust, fumes, mist, smoke, vapor, gas, aerosol, other particulate matter, odorous substances or any combination thereof arising from the construction operations, hauling, storage or manufacture of materials. All trucks carrying materials susceptible to having pollutants enter the ambient air are to be covered during transit.

(c) Noise Pollution Control Measures - The Contractor shall take measures to control the noise intensity to comply with the prescribed ratings as set forth by the regulations of the Department of Environmental Protection, the Occupational Safety and Health Administration and any other agency of the State or Federal government.

(d) Erosion and Sedimentation Control Measures - All watercourses shall be protected from sedimentation, both during and after construction. This provision applies particularly to dewatering activities, storage of excavated or stockpiled material, trench excavation, and placement of compacted berms and embankments. The Contractor shall control erosion and sedimentation in accordance with the publication entitled "2002 Connecticut Guidelines for Soil Erosion and Sediment Control" issued by the Connecticut Council on Soil and Water Conservation, effective May 2002, or as otherwise approved by the Engineer. Provisions shall include, but not be limited to, haybale check dams across any outlet channels and at the toe of all embankments under construction, and temporary culverts at all stream crossings, such that water which flows downstream does not contain additional sediments due to the Project work. The Contractor shall submit details of his erosion and sediment controls to the Engineer for review.

(e) Cleaning of Adjacent Streets - The Contractor shall sweep, and use other methods as necessary, to keep adjacent streets clean of mud, dirt, and debris caused by Project activities. Such sweeping or other methods shall be used on a daily basis when mud, dirt, or debris has been deposited on a street.

The Contractor is responsible for knowledge of and compliance with all aspects of any laws, regulations, permits, orders, and/or directives established or given by a regulating authority relating to pollution control associated with the Project. The Contractor is responsible for obtaining all approvals, and for performing all sampling, testing, and/or analyses, which may be required by the same.

Except where a separate bid item (or items) is included in the Contract Documents for such work, all work and other aspects of pollution control shall be considered as included in, and incidental to, the prices bid for the various bid items in the Contract Documents. The Contractor will not be granted any additional compensation, or any other extra, for any work or other aspect of handling water and sewage flows which could have been reasonably expected to be required or necessary in the prosecution of the Contract Work, or which is a result of the Contractor's actions, lack of action, negligence, or failure to comply with any aspect of this Article, or any other provision of the Contract Documents.

22. Contaminated or Hazardous Material

In the event the Contractor, during the prosecution of Contract Work, encounters any material that is believed to be contaminated, toxic, or hazardous to person or the environment, provided that the occurrence of, handling of, and protection of and from the subject material was not contemplated at the time of Contract execution, the Contractor shall immediately cease work in the immediate area and notify the Engineer. If the nature of the material or the situation under which it is encountered is such that immediate notification of the Connecticut Dept. of Environmental Protection or other regulating agency is required, such notification is the responsibility of the Contractor.

Upon said notification of the Engineer by the Contractor, the Engineer shall take the steps deemed necessary for making investigations and determinations regarding the handling of, protection of and from, and/or the disposal of the subject material. The Engineer shall delineate, or have delineated, a "no-work" area in the vicinity of the subject material within which all project work shall remain suspended until written permission to the contrary is given by the Engineer. The Contractor shall follow all directions and recommendations of the Department of Environmental Protection, or any other regulating authority having jurisdiction, and shall comply with all applicable laws and regulations, regarding the handling of, protection of and from, and/or disposal of the subject material. The Contractor shall also cooperate fully with any special personnel whom the Owner may retain the services of for the same.

23. Connection to Existing Work

The Contractor shall remove such existing masonry, concrete, equipment and piping as is necessary, in order to make the proper connections to the existing work at the locations shown. Also, he shall make the necessary pipe line, roadway and other connections required, in order that on completion of the Contract, water, sewage, or storm water, or as the case may be, will flow through the pipe lines and structures. No

extra payment will be made for this work, but the entire cost shall be included in the unit or lump sum prices bid for the various items of the work to be done under this Contract.

24. Snow Removal

If the Contractor's operations or occupancy of any public street or highway, or the rough surfaces over any trench or area being maintained by the Contractor, shall interfere with the removal or plowing of snow or ice by the public authorities or property owners, or sanding of icy surfaces, in the ordinary manner with regular highway equipment, then the Contractor shall perform such services for the public authority or property owner without charge; or failing to do so, shall reimburse the said authority, owners or the City for any additional cost they incur for doing such work occasioned by the conditions arising from the Contractor's operations, occupancy or trench surfaces, together with the damage to the equipment of said parties by those conditions, or claims of any party for damage or injury or loss by reason of failure to remove snow or ice, or to sand the icy spots under those conditions.

25. Inclement and Freezing Weather Conditions

In the event of temporary suspension of work, or during inclement weather, or whenever the Engineer shall direct, the Contractor will, and will cause the Subcontractor to protect carefully his and their work and materials against damage or injury from the weather. If, in the opinion of the Engineer, any work or materials have been damaged by the failure of the Contractor or Subcontractors to protect the work, such work or materials shall be removed and replaced at the expense of the Contractor.

Unless written permission is given, work liable to be affected by frost or freezing shall be suspended during freezing weather when work proceeds under freezing conditions the Contractor shall provide approved facilities for heating the materials and for protecting the finished work.

26. Final Inspection and Certificate of Completion

Upon the completion of all work whatsoever required, the Contractor must submit a written request to the City Engineer for a final inspection. The Engineer and/or his representative, representatives of the governing authority of the completed project (re: Public Works, Water Dept., etc.) and the Contractor shall hold a semi-final inspection of all work to ascertain that the work is acceptable to the governing authority.

Unacceptable work shall be corrected at no additional costs. After approval, the Engineer shall file a written certificate with the Owner and with the Contractor as to the entire amount of work performed and compensation earned by the Contractor including extra work and compensation thereof.

27. Payment to Contractor

The Owner agrees to pay the Contractor monthly or as nearly once a month as possible, ninety-five (95%) percent of the whole amount due the Contractor for the amount of work which the Engineer shall estimate as done up to the last day of that particular month. Payment of the estimated bill shall follow within thirty days after the receipt and approval of the estimate. It shall also be required in this Contract that the weekly payrolls and basic records (reference General Conditions paragraph 53) be submitted at the same time with the estimated monthly bill.

28. Final Payment and Liens

Thirty (30) days after the filing of such certificate of completion, the Owner shall pay to the Contractor 95 percent of the amount therein stated, less all prior payments and advances whatsoever to or for the account of the Contractor. All prior estimates and payments, including those relating to extra work shall be subject to correction by this payment which is throughout this Contract called Final Payment. The final 5% of the total amount will be paid at the end of one year (12 months) maintenance period, provided the whole of the work is at that time in conformity with the requirements of the Contract; if not, then as soon thereafter as the work shall be made to conform thereto. Said maintenance period for all parts of the work shall not commence prior to filing of the certificate of completion. After final acceptance of the work, the Contractor may request the filing a maintenance bond covering the maintenance period for the total amount of the retained 5% percent. If the City approves the maintenance bond option, the retained 5% percent shall then be paid to the Contractor.

Neither the final Contract payment nor any part of the retainage thereto shall become due to the Contractor until he has, if required, delivered to the Owner either a complete release of all liens arising out of the Contract or receipts in full in lieu thereof. In addition, if required, the Contractor shall furnish the Owner an affidavit that states that so far as he has knowledge or information, the releases and receipts described above include all labor, material and equipment for which a lien could be filed. In the event a subcontractor or materials provider is unwilling or unable to furnish a release or receipt in full, the Contractor may furnish a bond satisfactory to the Owner to indemnify the Owner against any liens. If any liens remain unsatisfied after all payments are made, the Contractor shall refund to the Owner all monies that the latter may be compelled to pay in discharging such a lien, including all costs and a reasonable attorney fee.

29. Disputes

(a) All disputes arising under this contract or its interpretation, whether involving law or fact or both, or extra work, and all claims for alleged breach of contract shall within ten (10) days of commencement of the dispute be presented by the Contractor to the Owner for decision. All papers pertaining to the claims shall be filed in quadruplicate. Such notice need not detail the amount of the claim, but shall state the facts surrounding the claim in sufficient detail to identify the claim,

together with its character and scope. In the meantime the Contractor shall proceed with the work as directed. Any claim not presented within the time limit specified within this paragraph shall be deemed to have been waived, except that if the claim is of a continuing character and notice of the claim is not given within ten days of its commencement, the claim will be considered only for a period commencing ten days prior to the receipt of the Owner of notice thereof.

(b) The Contractor shall submit in detail his claim and proof thereof. Each decision by the Owner will be in writing and will be mailed to the Contractor by registered mail, return receipt requested.

(c) If the Contractor does not agree with any decision of the Owner, he shall in no case allow the dispute to delay the work but shall notify the Owner promptly that he is proceeding with the work under protest and he may then except the matter in question from the final release.

30. Arbitration and Litigation

Any controversy or claim arising out of or relating to this contract, or the breach thereof, shall, at the option of the Owner, be settled by arbitration in accordance with the Construction Industry Arbitration Rules of the American Arbitration Association and judgment upon the award rendered by the Arbitrator(s) may be entered in any court having jurisdiction thereof. The Owner shall exercise its option to arbitrate concurrent with the rendering of its final decision on the claim. Should it fail to render a final decision within the prescribed time or fail to exercise its option, the claim will be determined in accordance with the Rules of the American Arbitration Association as hereinbefore stated.

31. Purchase Assignment

The contractor or subcontractor offers and agrees to assign to the public purchasing body all right, title and interest in and to all causes of action it may have under Section 4 of the Clayton Act, 15 U.S.C. Section 15, or under Chapter 624 of the General Statutes of Connecticut, arising out of the purchase of services, property or intangibles of any kind pursuant to a public purchase contract or subcontract. This assignment shall be made and become effective at the time the public purchasing body awards or accepts such contract, without further acknowledgment by the parties.

32. Quality of Materials

All work done and materials furnished shall be new and of the best quality customarily used in or furnished for installation of the character of that proposed. Many features of the proposed work are described in detail herein, but the failure to describe any part of the proposed work or any detail or appurtenance thereof shall not be an exception to the above rule. The absence of requirements in the contract or specifications covering

details usually included in first-class installation of this type shall not excuse the Contractor for their omission in this work.

33. Defective Materials

The Engineer may reject any or all defective or damaged material or any material not, in his opinion, in conformity with the specifications. Material which may at any time be rejected shall be promptly removed from the site. If the Contractor does not remove defective material promptly after written notice, the Engineer may cause such removal by such means as he shall select and at the Contractor's expense. No defective or damaged materials shall be used in the work. All defective material shall be conspicuously marked.

34. Uncovering and Corrective Work

If any portion of the work should be covered contrary to the request of the Engineer or to requirements specifically expressed in the Contract Documents, it must, if required in writing by the Engineer, be uncovered for his observation, and the Contractor shall bear the costs of uncovering and recovering and shall be responsible for resulting delays, even if the uncovered work is found to be in accordance with the Contract Documents.

The Contractor shall promptly correct all work rejected by the Engineer as defective or as failing to conform to the requirements of the Contract Documents, whether observed before or after Substantial Completion and whether or not fabricated, installed or completed. The Contractor shall bear all cost of correcting such rejected work, including compensation for the Engineer's additional services made necessary thereby.

If the Contractor fails to correct any such defective or nonconforming work to the satisfaction of the Engineer within a reasonable time after notification of the same, the Owner may, upon written notification to the Contractor of his intent to do so, separately arrange for the work to be corrected as he deems fit; and deduct any costs associated with the arrangements for and performance of the corrective work from any monies due, or to become due, the Contractor. Should such costs exceed the monies due, or to become due, the Contractor, than the Contractor shall be liable to the Owner for all amounts exceeding those due, or to become due, the Contractor.

35. Protection of the Work

The Contractor shall protect all work done under this contract and all work done by other contractors within the limits of this contract during the progress of the work and until completion and acceptance, from injury by reason of any work under this contract or by reason of any negligence on his part, or by reason of weather conditions.

36. Clean-up

Upon suspension or completion of the work or of any section thereof, the Contractor shall remove all materials, equipment and rubbish and shall leave the premises in a neat and orderly condition. The premises shall, during the progress of the work, be kept clean, presentable and satisfactory to the Engineer, and shall be left so at the completion of the contract.

37. Work Stoppages

Should the City be prevented or enjoined from proceeding with work either before or after the start of construction by reason of any litigation or other reason beyond the control of the City, the Contractor shall not be entitled to or assert claim for damage by reason of said delay. However, time for completion of the work will be extended to such reasonable time as the City may determine by means of a written Change Order.

38. Sheeting, Shoring and Bracing

Where necessary, the sides of trenches and excavations shall be supported by adequate sheeting, shoring, and bracing. The Contractor shall be held accountable and responsible for the sufficiency of all sheeting, shoring, and bracing used and for all damage to persons, property, streets or utilities resulting from the improper quality, strength, placing, maintaining, or removing of the same. Where sheeting is removed, care shall be taken not to disturb the new work or existing utilities and structures.

No sheeting is to be left in place unless expressly permitted by the Engineer. No direct payment will be made for sheeting, shoring, and bracing, and compensation for such work and all expenses incidental thereto shall be considered as included in the unit prices bid for the various items of this contract.

39. Compliance with Law

(a) In the administration and execution of the Project, the Applicant shall comply with all pertinent provisions of local, State and Federal law, and failure to do so shall constitute a default by the Applicant under this Agreement.

(b) The contract is subject to the provisions of Section 4-114a(a)-(e) of the Connecticut General Statutes which state: "The contractor agrees and warrants that in the performance of this contract he will not discriminate or permit discrimination against any person or group of persons on the grounds of race, color, retardation or physical disability, including, but not limited to, blindness, unless it is shown by such contractor that such disability prevents performance of the work involved, in any manner prohibited by the laws of the United States or of the State of Connecticut. If the contract is for a public works project, the contractor agrees and warrants that he will make good faith efforts to employ minority business enterprises as subcontractors and suppliers of materials on

such project. The contractor further agrees to provide the Commission on Human Rights and Opportunities with such information requested by the commission concerning the employment practices and procedures of the contractor as relate to the provisions of this section and Section 46a-56."

(c) This contract is subject to the provisions of Executive Order No. Three of Governor Thomas J. Meskill promulgated June 16, 1971 and, as such, this contract may be canceled, terminated or suspended by the State Labor Commissioner for violation or of noncompliance with said Executive Order No. Three, or any State or Federal Law concerning nondiscrimination, notwithstanding that the Labor Commissioner is not a party to this contract. The parties to this contract, as part of the consideration hereof, agree that said Executive Order No. Three is incorporated herein by reference and made a part hereof. The parties agree to abide by said Executive Order and agree that the State Labor Commissioner shall have continuing jurisdiction in respect to contract performance in regard to nondiscrimination, until the contract is completed or terminated prior to completion. The contractor agrees as part consideration hereof, that this contract is subject to the guidelines and rules issued by the State Labor Commissioner to implement Executive Order No. Three and that he will not discriminate in his employment practices or policies, will file all reports as required, and will fully cooperate with the State of Connecticut and the State Labor Commissioner.

(d) This contract is subject to the provisions of Executive Order No. Seventeen of Governor Thomas J. Meskill promulgated February 15, 1973, and as such, this contract may be canceled, terminated or suspended by the Contracting agency or the State Labor Commissioner for violation of or noncompliance with said Executive Order No. Seventeen, notwithstanding that the Labor Commissioner may not be a part to this contract. The parties to this contract, as part of the consideration hereof, agree that the Executive Order No. Seventeen is incorporated herein by reference and made a part hereof. The parties agree to abide by said Executive Order and agree that the contracting agency and the State Labor Commissioner shall have joint and several continuing jurisdiction in respect to contract performance in regard to listing all employment openings with the Connecticut Employment Service.

40. Termination for Convenience of the City

(a) The City may terminate performance of work under this contract in whole, or, from time to time, in part, if the City determines that termination is in its best interest. The City shall terminate by delivering to the Contractor a Notice of Termination specifying the extent of termination and the effective date.

(b) After receipt of a Notice of Termination, and except as otherwise directed by the City, the Contractor shall immediately proceed with the following obligations,

regardless of any delay in determining or adjusting any amounts due under his clause:

(1) Stop work as specified in the notice.

(2) Place no further subcontracts or orders for materials, services, or facilities related to the terminated work.

(3) Terminate all subcontracts to the extent they relate to the work terminated.

(4) Assign to the City, as directed by the City, all right, tittle, and interest of the Contractor under the subcontracts terminated, in which case the City shall have the right to settle or pay any termination settlement proposal arising out of those terminations.

(5) With approval or ratification to the extent required by the City, settle all outstanding liabilities and termination settlement proposals arising from the termination of subcontracts; the approval or ratification will be final for the purposes of this clause.

(6) As directed by the City, transfer title and deliver to the City (I) the fabricated or unfabricated parts, work in process, completed work, supplies, and other material produced or acquired for the work terminated, and (ii) the completed or partially completed plans, drawings, information, and other property that, if the contract had been completed, would be required to be furnished to the City.

(7) Complete performance of the work not terminated.

(8) Take any action that may be necessary, or that the City may direct, for the protection and preservation of the property related to this contract that is in the possession of the Contractor and in which the City has or may acquire an interest.

(9) Use its best efforts to sell, as directed or authorized by the City, any property of the types referred to in subparagraph (6) above; provided, however, that the Contractor (I) is not required to extend credit to any purchaser and (ii) may acquire the property under the conditions prescribed by, and at prices approved by, the City. The proceeds of any transfer or disposition will be applied to reduce any payments to be made by the City under this contract, credited to the price or cost of the work, or paid in any other manner as directed by the City.

(c) After expiration of the plant clearance period as defined in Subpart 45.6 of the Federal Acquisition Regulation, the Contractor may submit to the City a list, certified as to quantity and quality, of termination inventory not previously disposed of, excluding items authorized for disposition by the City. The Contractor may request the City to remove those items or enter into an

agreement for their storage. Within fifteen days, the City will accept title to those items and remove them or enter into a storage agreement. The City may verify the list upon removal of the items, or if stored, within 45 days of the submission of the list, and shall correct the list, as necessary, before final settlement.

(d) After termination, the Contractor shall submit a final termination settlement proposal to the City in the form and with the certification prescribed by the City. The Contractor shall submit the proposal promptly, but no later than 1 year from the effective date of termination, unless extended in writing by the City upon written request of the Contractor within this 1 year period. However, if the City determines that the facts justify it, a termination settlement proposal may be received and acted upon after 1 year or any extension. If the Contractor fails to submit the proposal within the time allowed, the City may determine, based on the information available, the amount, if any, due the Contractor because of the termination and shall pay the amount determined.

(e) Subject to paragraph (d) above, the Contractor and the City may agree upon the whole or any part of the amount to be paid because of the termination. The amount may include a reasonable allowance for profit on work done. However, the agreed amount, whether under this paragraph (e) or (f) below, exclusive of costs shown in subparagraph (f)(3), may not exceed the total contract price as reduced by (1) the amount of payments previously made and (2) the contract price of work not terminated. The contract shall be amended and the Contractor paid the agreed amount. Paragraph (f) below shall not limit, restrict, or affect the amount that may be agreed upon to be paid under this paragraph.

(f) If the Contractor and the City fail to agree on the whole amount to be paid because of the termination of work, the City shall pay the Contractor the amounts determined by the City as follows, but without duplication of any amounts agreed on under paragraph (e) above:

(1) The contract price for completed supplies or services accepted by the City (or sold or acquired under subparagraph (b)(9) above) not previously paid for, adjusted for any saving of freight and other charges.

(2) The total of-

(i) The costs incurred in the performance of the work terminated, including initial cost and preparatory expense allocable thereto. but excluding any costs attributable to supplies or services paid or to be paid under subparagraph (f)(1) above;
(ii) The cost of settling and paying termination settlement proposals under terminated subcontracts that are properly chargeable to the terminated portion of the contract if not included in subdivision (I) above; and
(iii) A sum, as profit on subdivision (I) above, determined by the City under 49.202 of the Federal Acquisition Regulation, in effect on the date

of this contract, to be fair and reasonable; however, if it appears that the Contractor would have sustained a loss on the entire contract had it been completed, the City shall allow no profit under this subdivision (iii) and shall reduce the settlement to reflect the indicated rate of loss.

(3) The reasonable costs of settlement of the work terminated, including-

(i) Accounting, legal, clerical, and other expenses reasonably necessary for the preparation of the termination settlement proposals and supporting data;
(ii) The termination and settlement of subcontracts (excluding the amounts of such settlements); and
(iii) Storage transportation and other costs incurred, reasonably necessary for the preservation, protection, or disposition of the termination inventory.

(g) Except for normal spoilage, and except to the extent that the City expressly assumed the risk of loss, the City shall exclude from the amounts payable to the Contractor under paragraph (f) above, the fair value, as determined by the City, of property that is destroyed, lost, stolen, or damaged so as to become undeliverable to the City or to a buyer.

(h) The cost principles and procedures of Part 31 of the Federal Acquisition Regulation, in effect on the date of the contract, shall govern all costs claimed or agreed to under this clause.

(i) The Contractor shall have the right of appeal, under the Disputes clause, for any determination made by the City under paragraph (d), (f), or (k), except that if the Contractor failed to submit the termination settlement proposal within the time provided in paragraph) d) or (k), and failed to request a time extension, there is no right of appeal. If the City has made a determination of the amount due under paragraph (d), (f), or (k), the City shall pay the Contractor (1) the amount determined by the City if there is no right of appeal or if no timely appeal has been taken, or (2) the amount finally determined on an appeal.

(j) In arriving at the amount due the Contractor hereby , there shall be deducted:

(1) All unliquidated advanced or other payments to The Contractor under the terminated portion of this contract;

(2) Any claim which the City has against the Contractor under this contract; and

(3) The agreed price for, or the proceeds of sale of, materials, supplies or other things acquired by the Contractor or sold under the provisions of this clause and not recovered by or credited to the City.

(k) If the termination is partial, the Contractor may file a proposal with the City for an equitable adjustment of the price(s) of the continued portion of the contract. The City shall make any equitable adjustment agreed upon. Any proposal by the Contractor for an equitable adjustment under this clause shall be requested within 90 days from the effective date of termination unless extended in writing by the City.

(l)

(1) The City may, under the terms and conditions it prescribes, make partial payments and payments against incurred by the Contractor for terminated portions of the contract, if the City believes the total of these payments will not exceed the amount to which the Contractor will be entitled.

(2) If the total payments exceed the amount finally determined to be due, the Contractor shall repay the excess to the City upon demand, computed with interest at the rate established by the Secretary of the Treasury under 50 U.S.C. App. 1215(b)(2). Interest shall be computed for the period from the date the excess payment is received by the Contractor to the date the excess is repaid. Interest shall not be charged on any excess payment due to a reduction in the Contractor's termination proposal because of a retention or other disposition of termination inventory until 10 days after the date of retention or disposition, or a later date determined by the City because of the circumstances.

(m) Unless otherwise provided for in this contract or by statute, the Contractor shall maintain all records and documents relating to the terminated portion of this Contractor three years after final settlement. This includes all books and other evidence bearing on the Contractor's costs and expenses under this contract. The Contractor shall make these records and documents available to the City, at the Contractor's office, at all reasonable times, without any direct charge. If approved by the City, photographs, microphotographs, or other authentic reproductions may be maintained instead of original records and documents.

BID PROPOSAL SUBMITTAL DOCUMENT

for the

FAIRVIEW CEMETERY WATER SYSTEM & FAUCETS

BID NO. 3887

CITY OF NEW BRITAIN, CONNECTICUT

HONORABLE ERIN E. STEWART, MAYOR

BID PROPOSAL SUBMITTAL PACKAGE

TABLE OF CONTENTS

Title	Page
Statement of Bidders Qualifications / Notary's Certificate	SBQ-1/7
Required Certificates and Forms:	
Prospective Vendor's Residency and Tax Payment Certificate	RTC-1/3
Certificate of Nonsegregated Facilities	REQ-1
Equal Opportunity Certificates	REQ-2/3
Bid/Proposal Affidavit	BP-1
Affirmation of Receipt of State Ethics Laws Summary	AFF-1
Contractor's Proposed Progress Chart	LOW-1
Certificate of Compliance with Connecticut General Statute Section 31 – 57b	LOW-2/3
Anticipated Source of Material, Form CON-083	LOW-4/6
Certificate of Insurance, Form CON-32	LOW-7
Disadvantaged Business Enterprise Participation Approval Request	LOW-8
Form of Bid / Bid Bond	BID-1/XX
W-9 Form	W9-1/4
Non Collusive Affidavit Form	NCAF-1

STATEMENT OF BIDDER'S QUALIFICATIONS

All questions must be answered and the data given must be clear and comprehensive. This statement must be notarized. If necessary questions may be answered on separate attached sheets. The Bidder may submit any additional information he desires.

1. Name of Bidder

   1A. Corporation __
   Partnership __
   Individual __
   Joint Venture __
   Other __
   (Check One)

2. Bidder's FEDERAL Tax Identification Number.

3. Permanent main office address, telephone number(s) and fax number(s).

4. Date organized?

5. If a corporation, answer the following:

   5.1 Date of incorporation:
   5.2 State of incorporation:
   5.3 President's name:
   5.4 Vice-President's name(s):

   5.5 Secretary's name:
   5.6 Treasurer's name:

6. **If a partnership, answer the following:**

   6.1 Date of organization:
   6.2 Name and address of all partners (State whether general or limited partnership):

7. If other than a corporation or partnership, describe organization and name principals:

8. How many years have you been engaged in construction under your present firm or trade name?

   8.1 Under what other or former names has your organization operated?

9. Contracts on hand:(Schedule these, showing name of project, owner, architect and/or engineer, gross amount of each contract, percent complete and the scheduled dates of completion).

9a. Please provide company name, address, telephone number and contact person for at least two installations which you have completed similar in complexity and facility usage to that which you are proposing in response to Public Bid XXXX that have been in service for at least three years.

10. General character of work performed by you and work normally performed with your own forces:

11. Have you ever failed to complete any work awarded to you? If so, note when, where, why:

12. Within the last five years, has any officer or partner of your organization ever been an officer or partner of another organization when it failed to complete a construction contract? If so, attach a separate sheet of explanation.

13. Have you ever defaulted on a contract? If so, where and why?

14. List the major projects your organization has completed in the past five years, giving the name of project, owner, architect and/or engineer, contract amount, date of completion, and percentage of the cost of the work performed with your own forces.

15. List your major equipment available for this contract, stating which is owned and which will be leased.

16. Experience in work similar in importance to this project and when completed by you.

17. State the number of years of background and experience of the principal members of your organization, including the officers and the nature of business activity.

18. Trade References:

19. Give Bank references and credit available $_____.

20. Name of Bonding Company and name and address of agent:

21. Attach a financial statement, audited if available, including Contractor's latest balance sheet and income statement showing the following items:

    A. Current Assets (e.g., cash, joint venture accounts, accounts receivable, notes receivable, accrued income, deposits, materials, inventory and prepaid expenses):

    B. Net fixed assets:

    C. Other assets:

    D. Current Liabilities (e.g., accounts payable, notes payable, accrued expenses, provision for income taxes, advances, accrued salaries, and accrued payroll taxes):

    E. Other liabilities (e.g., capital, capital stock, authorized and outstanding shares par values, earned surplus, and retained earnings):

    F. Name and address of firm preparing financial statement and date thereof:

21.1. Is this financial statement for the identical organization named in #1?

If not, explain the relationship and financial responsibility of the organization whose financial statement is provided (e.g., parent-subsidiary).

21.2. Will this organization act as guarantor of the contract for construction?

Note regarding financial Statement:

The Bidder financial information will be maintained in confidence pursuant to C.G.S. provision Section 1-19(b)(5), provided that:

a. Bidder clearly indicates in writing a request that the financial information be maintained in confidence by the City of New Britain; and,

b. Submission of financial information is made in a separate, sealed envelope clearly marked "Financial Information - to be maintained in confidence".

22. Will you, upon request, furnish any other information that may be required by the City of New Britain?

23. The undersigned hereby authorizes and requests any persons, firms, or corporations to furnish any information requested by the City of New Britain in verification of the recitals comprising this Statement of Bidder's Qualifications.

Dated this _____ day of _____ , _____

Bidder's Name: _____

By: _____ Official Address:

Title: _____ _____

(**Note:** the above signature must be notarized on following page.)

NOTARY'S CERTIFICATE:

STATE OF _____)

COUNTY OF _____)

_____ , being duly sworn, deposes and says that he is _____ of _____ , and that the answers to the foregoing questions and all statements therein are true and correct.

Subscribed and sworn before me this _____ day of_____, _____.

Notary Public

My Commission Expires:

PROSPECTIVE VENDOR'S RESIDENCY
and TAX PAYMENT CERTIFICATION

The City of New Britain Code of Ordinances, Sec. 2-575, reads as follows:

Sec. 2-575. Rejection of bid where bidder is in default to City

The agent shall not accept the bid of a contractor who is in default on the payment of taxes, licenses or other monies due the city.

The agent shall include in the bid document a form to be executed by a bidder certifying that said bidder is not in default on the payment of taxes, licenses or other monies due the city.

As used in this section, (1) a "principal" of a contractor shall mean an individual who is a director, an officer, an owner, a limited partner, or a general partner; and (2) "default in the payment of taxes" shall mean failure to pay taxes by the date such taxes are due and payable or the failure to be current with respect to a delinquent taxes payment schedule as set forth in a written agreement with the Tax Collector.

In accordance with this provision, the prospective vendor submitting the accompanying bid for City of New Britain Bid No. **3887** hereby makes the following certifications with respect to the residencies of his firm and the principals thereof:

Firm Name: _____

Complete Business Address
of Submitting Office:

_____

Complete Business Address
of Main Office (if different):

_____

The persons listed on the following pages (make and use additional copies of page "RTC-2__ of 3", if necessary, filling in the "__" in the page number and before the name as appropriate,) including their residency address, and all other requested information, represent all of the principals, as defined previously herein, of the above-named prospective vendor:

1. Name: _____

Residency Address:

_____

Mailing Address (if different):

_____

List below the addresses of any (other) properties located within the City of New Britain which the above-named principal owns in whole or in part, or otherwise has an interest in; reply with ‘none’ if applicable:

_____

_____

List below the names and addresses of any (other) business entities using a New Britain address of which the above-named principal is also a principal; reply with ‘none’ if applicable:

_____

_____

2. Name: _____

Residency Address:

_____

Mailing Address (if different):

_____

List below the addresses of any (other) properties located within the City of New Britain which the above-named principal owns in whole or in part, or otherwise has an interest in; reply with ‘none’ if applicable:

_____

_____

List below the names and addresses of any (other) business entities using a New Britain address of which the above-named principal is also a principal; reply with ‘none’ if applicable:

_____

_____

3. Name: _____

Residency Address:

_____

Mailing Address (if different):

_____

List below the addresses of any (other) properties located within the City of New Britain which the above-named principal owns in whole or in part, or otherwise has an interest in; reply with ‘none’ if applicable:

_____

_____

List below the names and addresses of any (other) business entities using a New Britain address of which the above-named principal is also a principal; reply with ‘none’ if applicable:

_____

_____

CERTIFICATION IS HEREBY MADE THAT _____
(The prospective vendor named above) AND THE _____ (total number of principals) PRINCIPALS THEREOF, AS LISTED HEREIN, ARE NOT IN DEFAULT ON PAYMENT OF TAXES, LICENSES, OR OTHER MONIES DUE THE CITY OF NEW BRITAIN AS OF THE DATE OF BID SOLICITATION.

Signature and Title of authorized principal of named prospective vendor: Date:

_____ _____

Review by Tax Collector (to be completed for successful bidder only):

Signature of Tax Official: Date:

_____ _____

CERTIFICATION OF NONSEGREGATED FACILITIES

This Bidder certifies that he does not maintain or provide for his employees any segregated facilities at any of his establishments, and that he does not permit his employees to perform their services at any location, under his control, where segregated facilities are maintained. The Bidder certifies further that he will not maintain or provide for his employees any segregated facilities at any of his establishments, and that he will not permit his employees to perform their services at any location under his control where segregated facilities are maintained. The Bidder agrees that a breach of his certification will be a violation of the Equal Opportunity clause in any Contract resulting from acceptance of his Bid. As used in this certification, the term "segregated facilities" means any waiting rooms, work areas, restrooms and washrooms, restaurants and other eating areas, time clocks, locker rooms and other storage or dressing areas, parking lots, drinking fountains, recreation or entertainment areas, transportation, and housing facilities provided for employees which are segregated by explicit directive or are, in fact, segregated on the basis of race, color, religion or natural origin, because of habit, local custom or otherwise. The Bidder agrees that (except where he has obtained identical certification from proposed Subcontractors for specific time periods) he will obtain identical certifications from proposed Subcontractors prior to the award of Subcontracts exceeding $10,000 which are not exempt from the provisions of the Equal Opportunity clause, and that he will retain such certifications in his files.

Date: _____ Signed: _____

Title: _____

CERTIFICATION OF BIDDER REGARDING EQUAL EMPLOYMENT OPPORTUNITY

INSTRUCTIONS

This certification is required pursuant to Executive Order 11246 (30 F. R. 12319-25). The implementing rules and regulations provide that any bidder or prospective contractor, or any of their proposed subcontractors, shall state as an initial part of the bid or negotiations of the contract whether it has participated in any previous contract or sub-contract subject to the equal opportunity clause; and, if so, whether it has filed all compliance reports due under applicable instructions.

Where the certification indicates that the bidder has not filed a compliance report due under applicable instructions, such bidder shall be required to submit a compliance report within seven calendar days after bid opening. No contract shall be awarded unless such report is submitted.

CERTIFICATION BY BIDDER

Bidder's Name: _____

Address and Zip Code: _____

_____

1. Bidder has participated in a previous contract or subcontract subject to the Equal Opportunity Clause.
   Yes No (If answer is yes, identify the most recent contract.)

2. Compliance reports were required to be filed in connection with such contract or subcontractor.
   Yes No (If answer is yes, identify the most recent contract.)

3. Bidder has filed all compliance reports due under applicable instructions, including SF-100.
   Yes No None Required

4. If answer to item 3 is "No", please explain in detail on reverse side of this certification.

Certification - The information above is true and complete to the best of my knowledge and belief.

Name and Title of Signer (Please Type) _____

_____

Signature Date

CERTIFICATION BY PROPOSED SUBCONTRACTOR REGARDING EQUAL EMPLOYMENT OPPORTUNITY

NAME OF PRIME CONTRACTOR _____
BID NO. XXXX

INSTRUCTIONS

This certification is required pursuant to Executive Order 11246 (30 F.R. 12319-25). The implementing rules and regulations provide that any bidder or prospective contractor, or any of their proposed subcontractors, shall state as an initial part of the bid or negotiations of the contract whether it has participated in any previous contract or sub-contract subject to the equal opportunity clause; and, if so, whether it has filed all compliance reports due under applicable instructions.

Where the certification indicates that the subcontractor has not filed a compliance report due under applicable instructions, such subcontractor shall be required to submit a compliance report before the owner approves the subcontract or permits work to begin under the subcontract.

SUBCONTRACTOR'S CERTIFICATION

Subcontractor's Name: _____

Address: _____

_____

1. Bidder has participated in a previous contract or subcontract subject to the Equal Opportunity Clause.
   Yes No

2. Compliance reports were required to be filed in connection with such contract or subcontract.
   Yes No

3. Bidder has filed all compliance reports due under applicable instructions, including SF-100.
   Yes No None Required

4. If answer to item 3 is "No", please explain in detail on reverse side of this certification.

Certification - The information above is true and complete to the best of my knowledge and belief.

NAME AND TITLE OF SIGNER (Please Type) _____

_____
SIGNATURE DATE

Agree/Contract Identifier:

Bid/Proposal Affidavit

Gift/Campaign Contribution Affidavit to Accompany Bid or Proposal for Large State Contracts, Pursuant to Sections 2, 3 and 4 of Public Act 04-245 and Governor M. Jodi Rell's Executive Order No. 1, para 8.

I, _____,

Type/Print Name and Title

hereby swear that during the two-year period preceding the submission of this bid or proposal that neither myself nor any principals or key personnel of the submitting firm or corporation who participated directly, extensively and substantially in the preparation of this bid or proposal nor any agent of the above gave a gift, as defined in Conn. Gen. Stat. § 1-79(e), including a life event gift as defined in Conn. Gen. Stat. § 1-79(e)(12), except the gifts listed below:

Name of Benefactor	Name of recipient	Gift Description	Value	Date of Gift

to (1) any public official or state employee of the state agency or quasi-public agency soliciting the bids or proposals who participated directly, extensively, and substantially in the preparation of the bid solicitation or preparation of request for proposal or (2) to any public official or state employee who has supervisory or appointing authority over the state agency or quasi-public agency soliciting the bid or proposal.

Further, neither I nor any principals or key personnel of the submitting firm or corporation who participated directly, extensively and substantially in the preparation of this bid or proposal know of any action to circumvent this gift/campaign contribution affidavit.

Further, during the two-year period preceding the submission of this bid or proposal, neither I nor any principals or key personnel of the submitting firm or corporation who participated directly, extensively and substantially in the preparation of this bid or proposal nor any agent of the above gave a contribution to a candidate for statewide public office or the General Assembly, as defined in Conn. Gen. Stat. §9-333b, except the contributions listed below:

Contributor	Recipient	Amount/ Value	Date of Contribution	Contribution Description

Sworn as true to the best of my knowledge and belief, subject to the penalties of false statement.

_____ _____

Signature Date

Sworn and subscribed before me on this _____ day of _____, 2005

_____

Commissioner of the Superior Court/
Notary Public

STATE OF CONNECTICUT
AFFIRMATION OF RECEIPT OF STATE ETHICS LAWS SUMMARY

Affirmation to accompany a large State construction or procurement contract, having a cost of more than $500,000, pursuant to Connecticut General Statutes §§ 1-101mm and 1-101qq

---

INSTRUCTIONS:

Complete all sections of the form. Submit completed form to the awarding State agency or contractor, as directed below.

CHECK ONE:

☐ I am a person seeking a large State construction or procurement contract. I am submitting this affirmation to the awarding State agency with my bid or proposal. [Check this box if the contract will be awarded through a competitive process.]

☐ I am a contractor who has been awarded a large State construction or procurement contract. I am submitting this affirmation to the awarding State agency at the time of contract execution. [Check this box if the contract was a sole source award.]

☐ I am a subcontractor or consultant of a contractor who has been awarded a large State construction or procurement contract. I am submitting this affirmation to the contractor.

IMPORTANT NOTE:

Contractors shall submit the affirmations of their subcontractors and consultants to the awarding State agency. Failure to submit such affirmations in a timely manner shall be cause for termination of the large State construction or procurement contract.

AFFIRMATION:

I, the undersigned person, contractor, subcontractor, consultant, or the duly authorized representative thereof, affirm (1) receipt of the summary of State ethics laws* developed by the Office of State Ethics pursuant to Connecticut General Statutes § 1-81b and (2) that key employees of such person, contractor, subcontractor, or consultant have read and understand the summary and agree to comply with its provisions.

* The summary of State ethics laws is available on the State of Connecticut's Office of State Ethics website at http://www.ct.gov/ethics/lib/ethics/guides/contractors_guide_09_final.pdf

Signature _____ Date _____

Printed Name _____ Title _____

Firm or Corporation (if applicable) _____

Street Address _____ City _____ State ____ Zip ____

Awarding State Agency _____

CONTRACTOR'S PROPOSED PROGRESS CHART – HIGHWAY CONSTRUCTION BAR CHART

Project Number(s): _____

Town(s) of: _____

Date Submitted: _____

Description: _____

Operation	Quantity	Duration
Organization		
Clrearing & Grubbing		
Earth Excavation		
Rock Excavation		
Channel Excavation		
Borrow		
Drainage (Trench, Pipe)		
Pile Driving		
Footing		
Abutments & Wings		
Steel Erection		
Floor Slabs		
Concrete Pavement		
Bit. Conc. Pavement		
Bridge Railing		
Curbing		
Sidewalk		
Fencing		
Electrical Work		
Traffic Items		
Misc. & Clean up		

Calendar Days

Equipment to expect to use:

_____

_____

_____

_____

Total Calendar Days: _____

Signed By: _____

1/95

STATE OF CONNECTICUT

Certificate of Compliance with Connecticut General Statute Section 31 - 57b

I hereby certify that all of the statements herein contained below have been examined by me, and to the best of my knowledge and belief are true and correct.

The _____ **HAS / HAS NOT**
Company Name (Cross out Non-applicable)

been cited for three (3) or more willful or serious or serious violations of any Occupational Safety and Health Act (OSHA) or of any standard, order or regulation promulgated pursuant to such act, during the three year period preceding the bid, provided such violations were cited in accordance with the provisions of any State Occupational Safety and Health Act of 1970, and not abated within the time fixed by the citation and such citation has not been set aside following appeal to the appropriate agency of court having jurisdiction or **HAS / HAS NOT** (Cross out Non-applicable) received one or more criminal convictions related to the injury or death of any employee in the three-year period preceding the bid.

The list of violations (if applicable) is attached.

_____
(Name of Firm, Organization or Corporation)

Signed: _____
Written Signature:

_____
Name Typed: *(Corporation Seal)*

Title: _____
(Title of Above Person, typed)

Dated: _____

State of)

County of) ***ss:*** ***A.D., 20***_____

)

Sworn to and personally appeared before me for the above, _____,
(Name of Firm, Organization, Corporation)

Signer and Sealer of the foregoing instrument of and acknowledged the same to be the free act and deed of

_____, and his/her free act and deed as
(Name of Person appearing in front of Notary or Clerk)

_____.
(Title of Person appearing in front of Notary or Clerk)

My Commission Expires: _____
(Notary Public) *(Seal)*

Sec. 31-57b. Awarding of contracts to occupational safety and health law violators prohibited. No contract shall be awarded by the state or any of its political subdivisions to any person or firm or any firm, corporation, partnership or association in which such persons or firms have an interest (1) which has been cited for three or more wilful or serious violations of any occupational safety and health act or of any standard, order or regulation promulgated pursuant to such act, during the three-year period preceding the bid, provided such violations were cited in accordance with the provisions of any state occupational safety and health act or the Occupational Safety and Health Act of 1970, and not abated within the time fixed by the citation and such citation has not been set aside following appeal to the appropriate agency or court having jurisdiction or (2) which has received one or more criminal convictions related to the injury or death of any employee in the three-year period preceding the bid. Any person who knowingly provides false information concerning the information required pursuant to this section shall be assessed a civil penalty of not less than five hundred dollars nor more than five thousand dollars and shall be disqualified from bidding on or participating in a contract with the state or any of its political subdivisions for five years from the date of the final determination that the information is false. Any political subdivision or any state agency receiving false information pursuant to this section shall notify the Commissioner of Administrative Services and, upon receipt of such notice, the commissioner shall conduct a hearing in accordance with the provisions of chapter 54. Upon a determination that false information was provided, the commissioner shall impose a civil penalty in accordance with the provisions of this section. Such civil penalty shall be paid to the Treasurer or to an official of the political subdivision, as the case may be. Any civil penalty imposed pursuant to this section may be collected in a civil proceeding by any official of a political subdivision authorized to institute civil actions or, in the case of the state, by the attorney general, upon complaint of the Commissioner of Administrative Services.

ANTICIPATED SOURCE OF MATERIAL
CON-083

The attached form *CON-083 Anticipated Source of Material* shall be filled out by the lowest responsible bidder and submitted prior to award of the contract.

ANTICIPATED SOURCE OF MATERIAL

REV. 8/98
PRINTED ON RECYCLED PAPER

STATE OF CONNECTICUT
DEPARTMENT OF TRANSPORTATION
P.O. BOX 317546
NEWINGTON, CT 06111-7546

PROJECT NUMBER
TOWN

MATERIALS	SOURCE OF SUPPLY AND MAILING ADDRESS PG. 1 of 2
AGGREGATES:	
Coarse	
Fine	
BITUMINOUS CONCRETE	
BITUMEN:	
Asphalt Cement	
Asphalt Cutbacks	
Emulsion	
Tar	
BRICK	
CEMENT - PORTLAND	
Type I	
Type II	
Type 1A	
Type IIA	
TYPE OF DELIVERY:	
Truck	
R.R. Car	
CONCRETE BLOCKS	
CONCRETE, PORTLAND CEMENT	
CURING MATERIAL:	
Mats	
Paper	
Compound	
Other	
DAMPPROOFING and/or WATERPROOFING:	
Primer	
Seal	
Fabric	
FENCE:	
Property or Wire	
Posts: Steel	
Wood	
Chain Link	
Fittings for Chain Link	
GRAVEL	
GUIDE RAIL:	
Wire Rope	
Fittings	
Posts:	
Metal	
Wood	
JOINT FILLER	
JOINT SEALER	
LOAD TRANSFER UNIT	
METAL FLASHING	
METAL BEAM TYPE RAIL (BRIDGE)	
METAL BEAM TYPE RAIL	
METAL BRIDGE RAIL	
OVERHEAD SIGN SUPPORTS	
PAINT:	
2nd Prime Coat (Field)	
1st Field Coat	

MATERIALS	SOURCE OF SUPPLY AND MAILING ADDRESS PG. 2 of 2
PILING:	
Sheets	
Bearing	
Pipe	
Wood (Pressure Treated)	
Precast, Prestressed	
PIPE:	
C.C.M.	
Cast Iron	
Reinf. Concrete	
Vitrified Clay	
PRECAST, PRESTRESSED UNITS	
STEEL:	
Bar Mat Fabric and/or Wire Mesh	
Metal Cribbing	
Reinforcement	
Scuppers	
SHEAR CONNECTORS:	
Spiral	
Welded	
STRUCTURAL (BRIDGES)	
STRUCTURAL (Side mounted sign supports)	
	CONTRACTOR
	SIGNED BY
	DATE

NOTE: Items not listed above shall be listed below.

CON-32 REV. 11/07
STATE OF CONNECTICUT
DEPARTMENT OF TRANSPORTATION

CERTIFICATE OF INSURANCE

This is to certify that the Insurance Company named herein has issued to the named insured the policies listed below, that these policies are written in accordance with the Insurance Company's standard policies and endorsements, except as indicated below or as noted in the attachments hereto, which policies and endorsements will be made available to the Department of Transportation upon request, that they provide coverages and limits of liability shown with respect to the hazards indicated, that they are in force on this date, and that this Certificate is furnished in accordance with and for the purpose of satisfying the requirements of the Department of Transportation in connection with the award and the performance of any contract or agreement, or the issuance of any permit or authorization by the Transportation Commissioner or duly authorized agent.

The Insurance Company has a right and duty to defend the insured against any suit seeking damages (or under Workers' Compensation benefits) to which the referenced insurance policy applies and may investigate and settle any claim or suit as they deem appropriate. The Insurance Company's duty to defend or settle any claim or suit ends when the applicable limit of liability has been exhausted in the payment of judgments or settlements.

NAME OF INSURED _____

ADDRESS _____ CITY _____ STATE _____

HAZARDS	POLICY NUMBER	EFFECTIVE DATE	EXPIRATION DATE	COVERAGES AND LIMITS OF LIABILITY BODILY INJURY LIABILITY AND PROPERTY DAMAGE LIABILITY	
				ALL PERSONS / ALL DAMAGES EACH ACCIDENT or OCCURRENCE	AGGREGATE
A OWNER'S AND CONTRACTOR'S PROTECTIVE LIABILITY FOR AND IN THE NAME OF THE STATE OF CONN (1)(2) SEE BELOW					
*B COMMERCIAL GENERAL LIABILITY (1) SEE BELOW					
*C EXPLOSION, COLLAPSE, OR UNDERGROUND DAMAGE LIABILITY(1) SEE BELOW					
*D AUTOMOBILE LIABILITY OWNED AUTOMOBILES HIRED AUTOMOBILES NON-OWNED AUTOMOBILES (1) SEE BELOW					
*E RAILROAD PROTECTIVE LIABILITY (1) (2) SEE BELOW					
*F EXCESS/UMBRELLA LIABILITY (1) SEE BELOW					
G VALUABLE PAPERS and RECORDS	XXXXXXXXXXXXX	XXXXXXXX	XXXXXXXX	POSSESSION	ALL OTHER
VALUABLE PAPERS and RECORDS					
H BLASTING (1) SEE BELOW					
I ** WORKERS' COMPENSATION				STATUTORY COVERAGES AND LIMITS	
J					

* State of Connecticut Is Named as Additional Insured.

** Compensation Commissioner's Certificate shall be supplied herewith by self-insured party.

Note: If Excess/Umbrella Liability Insurance is needed to meet the Agreement/Contract, etc. minimum requirements, complete Section F above.

Check This Certificate is issued in accordance with the terms of:

☐ Construction Contracts ☐ Lease Agreement Rights of Way ☐ Demolition Contracts

☐ Permit Work No. _____ ☐ Project No. _____ ☐ Agree No. _____

☐ Engineering _____ ☐ Other Specify & including all operations incidental thereto.

PARTY FOR NOTICE Bureau: *Unit:* *Name:*

(1) It is agreed that the herein named Insurance Company will not use the defense of sovereign immunity in the adjustment of claims or in the defense of any suit brought against the State, unless requested to do so in writing by the State.

(2) It is agreed that the Insurance Company will bill premiums and audit charges earned under the protective liability policy(ies) to the above named insured; however, if named insured is different from the vendor, consultant, contractor or party of record, the vendor, consultant, contractor or party of record will be billed.

IN THE EVENT OF ANY REDUCTION IN LIMITS, CANCELLATION OF OR FAILURE TO RENEW ANY ONE OR MORE OF SAID POLICIES THE _____ SHALL GIVE NOT LESS
(INSURANCE COMPANY)

THAN THIRTY DAYS WRITTEN NOTICE TO THE PARTY FOR NOTICE TO WHOM THIS CERTIFICATE IS ISSUED OF SUCH REDUCTION IN LIMITS, CANCELLATION, OR FAILURE TO RENEW.

DATED THIS _____ DAY OF _____ _____

_____
(Insurance Company)

_____
(Address)

_____
(Agency)

_____
(Address)

_____
(Authorized Agent's Name & Signature)

ISSUED TO: CONNECTICUT DEPARTMENT OF TRANSPORTATION
CONTRACT ADMINISTRATION
2800 BERLIN TURNPIKE
NEWINGTON, CT 06111

Printed on recycled or recovered paper.

CONNECTICUT DEPARTMENT OF TRANSPORTATION

DBE PARTICIPATION APPROVAL REQUEST

TO BE SUBMITTED WITHIN THE TIME FRAME INDICATED BY THE BID DOCUMENTS.

(REV. DATE 08/08)

Submit this form with ORIGINAL SIGNATURES for approval

Sheet _____ of _____

ConnDOT Project No.: _____

Prime Contractor: _____

Town(s) of: _____

FEIN Number: _____

Date of Bid Opening: _____

Proposed DBE Subcontractor: _____

Date of Submittal: _____

FEIN Number: _____

Full Company Address: _____

Phone Number: _____

Original Contract Dollar Amount: _____

Subcontracted to this Firm: _____

Proposed Percent of Contract to be Subcontracted: _____

Item Number & Description	Firm Type Code (S, M, P, T, or V)	Quantity and Unit for Item Subcontracted	Item Total Price	Dollar Amount to be Subcontracted *	If Supply Item Indicate 60% of Value

Are any items Partial? **(* Note: If yes, an explanation of the subcontractor's involvement must be included.)** _____ YES* _____ NO

Is any portion of this DBE proposed work being further subcontracted? _____ YES _____ amount _____ NO

If YES, is the second tier subcontractor a DBE? _____ YES* _____ NO

If YES please provide DBE form.

Approval is requested for the above firm to perform as:

Check all that apply **(Firm Type Code):** **Subcontractor (S)** _____ **Manufacturer (M)** _____ **Supplier (P)** _____ **Trucking (T)** _____ **Service (V)** _____

_____
Signature of Prime Contractor, Title

_____
Signature of Subcontractor, Title

Only firms currently certified as a DBE by ConnDOT may be used to satisfy the Contract DBE goal requirement.
Information concerning the DBE Directory is available at: www.ct.gov/dot/dbe or by calling 860-594-2112

FORM OF BID

The undersigned bidder hereby submits the following bid for the **FAIRVIEW CEMETERY WATER SYSTEM & FAUCETS, Bid No. 3887**, in accordance with the Bid Documents for said project. The undersigned has carefully examined and understands all Bid Documents, as listed in Article 3 of the Instructions to Bidders [section] of the "Bid Requirements and Conditions Document"; and has complied with all the provisions thereof in the preparation of his bid. The Undersigned also offers to furnish all plant, labor, material, supplies, equipment and other facilities for or incidental to the construction of said project as required by, and in strict accordance with, the Improvement Drawings and Specifications, and all addenda issued by the Owner and posted on the City's website for download by all prospective bidders, for the following unit bid prices.

The Bid Unit Price for each item and the Total Amount Bid must be written in words and figures for the Base Bid and any Alternate Bids.

The undersigned bidder acknowledges receipt of the following:

Addendum #	Date	Acknowledged
_____	_____	_____
_____	_____	_____
_____	_____	_____
_____	_____	_____
_____	_____	_____

The total amount of the bid based on the estimated quantities shown herein and as computed by the undersigned Bidder for the **FAIRVIEW CEMETERY WATER SYSTEM & FAUCETS, Bid No. 3887**, is:

BID

TOTAL AMOUNT BID IN WORDS:

_____ DOLLARS

TOTAL AMOUNT BID IN FIGURES: $

ALTERNATES	**AMOUNT**
ALTERNATE #1 – Granite Posts	$
ALTERNATE #1 – Concrete Pads	$
ALTERNATE #1 – Bituminous Concrete Pavement Repair	$

It is understood and agreed to by the bidder that:

1) The itemization of the Bid, and the selection of the Bid Items used therein, is at the Owner's discretion, and solely for the Owner's convenience in evaluating and comparing the submitted bids and administering the Contract.

2) The Unit Price bid for each item, and the aggregate sum of the Unit Prices multiplied by the corresponding estimated quantity as applied to the project as a whole, includes all plant, labor, material, supplies, equipment, and other facilities necessary for, and incidental to, the construction of said item, complete, fully functional, and properly finished, as required by, and in strict conformance with these Bid Documents, and for the use (or uses) and appearance intended by the Owner.

3) The price bid per unit quantity of work in the various items above shall control in contract award herein.

4) The quantities noted above are approximate, only being estimated solely for use in comparing bids.

5) The Total Bid Amounts entered above, and the bid amount for each item (obtained by multiplying the unit price by the estimated quantity), are included solely for the purpose of checking this proposal and for the convenience of the Bidder.

6) The above prices are to be paid for the actual quantities of the items of work in the completed work or structure. Should the dimensions of any part of the work or the quantities of materials used or work performed be different than those designated in this Form of Bid, or on the Improvement Drawings, the actual quantities only will be allowed in measurement.

7) In submitting this Bid, the Bidder understands that the Owner reserves the right to reject any and all bids, and to waive any informalities in the bidding. The Owner further reserves the right to make the award on the basis of the above bid.

8) If written notice of the acceptance of this bid is mailed, telegraphed, or delivered to the undersigned after the opening thereof, the undersigned agrees to execute and deliver any Agreement in the prescribed form and furnish the required bonds within ten (10) days after the Agreement is presented to him for his signature.

9) The Bidder is enclosing a statement of his qualifications.

10) The Owner reserves the right to delete any of the bid items in total or to increase or reduce the quantity of any bid items.

11) The Bidder shall comply with all provisions of the Bid Documents in his prosecution of the Project if awarded the Contract; and all provisions will be enforced by the Owner.

Dated this _____ day of _____ , _____

Bidder's Name:

By: _____Official Address_____

_____

Title: _____

BID BOND

KNOW ALL MEN BY THESE PRESENTS, that we, the undersigned, _____, as Principal, and _____, as Surety, are hereby held and firmly bound unto The City of New Britain, as Owner, in the penal sum of _____ Dollars ($_____) lawful money of the United States, for the payment of which sum well and truly to be made, we hereby jointly and severally bind ourselves, our heirs, executors, administrators, successors, and assigns firmly by these presents.

The condition of the above obligation is such that whereas the Principal has submitted to the Owner a certain Bid, attached hereto, and made a part hereof by reference, to enter into a contract in writing for the project entitled **PROJECT NAME, Bid No. XXXX.**

NOW THEREFORE,

(a) if said Bid shall be rejected, or in the alternate,

(b) if said Bid shall be accepted and the Principal shall execute and deliver a contract in the Form of Contract (properly completed in accordance with said Bid) attached hereto, and shall furnish the Owner with proper bonds for his faithful performance of said contract and for the payment of all persons performing labor or furnishing materials in connection therewith, and shall in all other respects perform the agreement created by the acceptance of said Bid, then this obligation shall be void. Otherwise, the same shall remain in force and effect; it being expressly understood and agreed that the liability of the Surety for any and all claims hereunder shall, in no event, exceed the penal amount of his obligation as herein stated.

The surety, for value received, hereby stipulates and agrees that the obligation of said Surety and its bond shall be in no way impaired or affected by any extension of the time within which the Owner may accept such Bid; and said Surety does hereby waive notice of any such extension.

IN WITNESS WHEREOF, the Principal and the Surety have hereunto set their hands and seals, and such of them as are corporations have caused their corporation seals to be hereto affixed, and these presents to be signed by their proper officers.

Made and entered into this _____ day of _____,_____.

PRINCIPAL:

By:_____

SURETY:

By:_____

Form **W-9**
(Rev. January 2011)
Department of the Treasury
Internal Revenue Service

Request for Taxpayer Identification Number and Certification

Give Form to the requester. Do not send to the IRS.

Print or type
See **Specific Instructions** on page 2.

Name (as shown on your income tax return)

Business name/disregarded entity name, if different from above

Check appropriate box for federal tax classification (required): ☐ Individual/sole proprietor ☐ C Corporation ☐ S Corporation ☐ Partnership ☐ Trust/estate

☐ Limited liability company. Enter the tax classification (C=C corporation, S=S corporation, P=partnership) ▶

☐ Other (see instructions) ▶

☐ Exempt payee

Address (number, street, and apt. or suite no.)

Requester's name and address (optional)

City, state, and ZIP code

List account number(s) here (optional)

Part I Taxpayer Identification Number (TIN)

Enter your TIN in the appropriate box. The TIN provided must match the name given on the "Name" line to avoid backup withholding. For individuals, this is your social security number (SSN). However, for a resident alien, sole proprietor, or disregarded entity, see the Part I instructions on page 3. For other entities, it is your employer identification number (EIN). If you do not have a number, see *How to get a TIN* on page 3.

Social security number

☐☐☐ – ☐☐ – ☐☐☐☐

Note. If the account is in more than one name, see the chart on page 4 for guidelines on whose number to enter.

Employer identification number

☐☐ – ☐☐☐☐☐☐☐

Part II Certification

Under penalties of perjury, I certify that:

1. The number shown on this form is my correct taxpayer identification number (or I am waiting for a number to be issued to me), and
2. I am not subject to backup withholding because: (a) I am exempt from backup withholding, or (b) I have not been notified by the Internal Revenue Service (IRS) that I am subject to backup withholding as a result of a failure to report all interest or dividends, or (c) the IRS has notified me that I am no longer subject to backup withholding, and
3. I am a U.S. citizen or other U.S. person (defined below).

Certification instructions. You must cross out item 2 above if you have been notified by the IRS that you are currently subject to backup withholding because you have failed to report all interest and dividends on your tax return. For real estate transactions, item 2 does not apply. For mortgage interest paid, acquisition or abandonment of secured property, cancellation of debt, contributions to an individual retirement arrangement (IRA), and generally, payments other than interest and dividends, you are not required to sign the certification, but you must provide your correct TIN. See the instructions on page 4.

Sign Here **Signature of U.S. person ▶** **Date ▶**

General Instructions

Section references are to the Internal Revenue Code unless otherwise noted.

Purpose of Form

A person who is required to file an information return with the IRS must obtain your correct taxpayer identification number (TIN) to report, for example, income paid to you, real estate transactions, mortgage interest you paid, acquisition or abandonment of secured property, cancellation of debt, or contributions you made to an IRA.

Use Form W-9 only if you are a U.S. person (including a resident alien), to provide your correct TIN to the person requesting it (the requester) and, when applicable, to:

1. Certify that the TIN you are giving is correct (or you are waiting for a number to be issued),

2. Certify that you are not subject to backup withholding, or

3. Claim exemption from backup withholding if you are a U.S. exempt payee. If applicable, you are also certifying that as a U.S. person, your allocable share of any partnership income from a U.S. trade or business is not subject to the withholding tax on foreign partners' share of effectively connected income.

Note. If a requester gives you a form other than Form W-9 to request your TIN, you must use the requester's form if it is substantially similar to this Form W-9.

Definition of a U.S. person. For federal tax purposes, you are considered a U.S. person if you are:

- An individual who is a U.S. citizen or U.S. resident alien,
- A partnership, corporation, company, or association created or organized in the United States or under the laws of the United States,
- An estate (other than a foreign estate), or
- A domestic trust (as defined in Regulations section 301.7701-7).

Special rules for partnerships. Partnerships that conduct a trade or business in the United States are generally required to pay a withholding tax on any foreign partners' share of income from such business. Further, in certain cases where a Form W-9 has not been received, a partnership is required to presume that a partner is a foreign person, and pay the withholding tax. Therefore, if you are a U.S. person that is a partner in a partnership conducting a trade or business in the United States, provide Form W-9 to the partnership to establish your U.S. status and avoid withholding on your share of partnership income.

NON COLLUSIVE AFFIDAVIT OF BIDDERS

BID# 3887_____- _____

State of (_____);

County of (_____).

I state that I am the _____ of _____
(title) (name of firm)

and that I am authorized to make this affidavit on behalf of my firm, and its owners, directors, and officers. I am the person responsible in my firm for the price(s) and the amount of this Bid.

I certify that:

(1) The price and amount on this Bid has been arrived at independently and without consultation, communication, or agreement with any other bidder.
(2) Neither the price(s) nor the amount of this Bid and approximate price(s) nor approximate amount of this Bid has been disclosed to any other firm or person who is a Bidder and that no disclosure of these items will be made prior to the Bid opening.
(3) No attempt has been or will be made to induce any firm or person to refrain from proposing on this Bid, or to submit a Bid higher that this Bid, or to submit any intentionally higher or non competitive Bid.
(4) Neither the said Bidder nor any of its officers, partners, owners, representatives, employees or parties in interest, including this affidavit, has in any way colluded, conspired, connived or agreed, directly or indirectly with any other Bidder, firm or person to submit a collusive or sham Bid in connection with the Contract for which the attached Bid has been submitted or to refrain from Bidding in connection with such Contract, or has in any manner, directly or indirectly, sought by agreement or collusion or communication or conference with any other Bidder, firm or person to fix the price or prices in the attached Bid or of any other Bidder, or to fix any overhead, profit or cost element of the Bid price or the Bid price of any Bidder, or to secure through any collusion, conspiracy, connivance or unlawful agreement any advantage against the City of New Britain, owner, or any person interested in the proposed Contact.
(5) The Bid of my firm is made in good faith and not pursuant to any agreement or discussion with, or inducement from, any firm or person to submit a complementary or other non competitive proposal.

(6) I state that _____understands and acknowledges that all
(name of my firm)
representations of this affidavit are material and important, and will be relied on by the City of New Britain in awarding a contract for which this is submitted. I understand and my firm understands that any misstatement in this affidavit is and shall be treated as fraudulent concealment from the City of New Britain of the true facts relating to the submission of Bids for this contract. That the City of New Britain also reserves the right to reject our Bid if failure to complete this document, have it notarized and submitted with our Bid documents.

The undersigned Bidder further certifies that this statement is executed for the purpose of including the City of New Britain to consider the Bid and make an award in accordance therewith.

Subscribe and Sworn to me this

_____day of _____,
2016

_____

_____

Notary Public
My Commission Expires

_____

_____
Legal Name of Bidder

_____
Business Address

_____
Signature and Title of Person

_____
Date

SECTION 011000 – SUMMARY FOR SITEWORK

PART 1 - GENERAL

1.1 RELATED DOCUMENTS

A. Drawings and general provisions of the Contract, including General and Supplementary Conditions and other Division 1 Specification Sections, apply to this Section.

1.2 SUMMARY

A. This Section includes the following:

1. Type of the Contract.
2. Use of premises.
3. Owner's occupancy requirements.
4. Work restrictions.
5. Specification formats and conventions.

1.3 TYPE OF CONTRACT

A. Project will be constructed under a single prime contract.

1.4 USE OF PREMISES

A. Owner Occupancy: Allow for Owner occupancy of Project site and use by the public.

B. Driveways and Entrances: Keep driveways parking, loading areas, and entrances serving premises clear and available to Owner, Owner's employees, and emergency vehicles at all times. Do not use these areas for parking or storage of materials.

1. Schedule deliveries to minimize use of driveways and entrances.
2. Schedule deliveries to minimize space and time requirements for storage of materials and equipment on-site.

1.5 OWNER'S OCCUPANCY REQUIREMENTS

A. Full Owner Occupancy: Owner will occupy site and existing buildings during entire construction period. Cooperate with Owner during construction operations to minimize conflicts and facilitate Owner usage. Perform the Work so as not to interfere with Owner's day-to-day operations.

1. Maintain access to existing walkways, and other adjacent occupied or used facilities. Do not close or obstruct walkways, or other occupied or used facilities without written permission from Owner and authorities having jurisdiction.
2. Provide not less than 72 hours notice to Owner of activities that will affect Owner's operations.

1.6 WORK RESTRICTIONS

A. On-Site Work Hours: Work shall be generally performed during normal business working hours of 7:00 a.m. to 5:00 p.m., Monday through Friday, accept otherwise indicated.

B. Existing Utility Interruptions: Do not interrupt utilities serving facilities occupied by Owner or others unless permitted under the following conditions and then only after arranging to provide temporary utility services according to requirements indicated:

1. Notify Landscape Architect not less than two days in advance of proposed utility interruptions.
2. Do not proceed with utility interruptions without Landscape Architect's written permission.

1.7 SPECIFICATION FORMATS AND CONVENTIONS

A. Specification Format: The Specifications are organized into Divisions and Sections using the 33-division format and The American Institute of Architects (AIA) "MasterSpec" numbering system exclusively published and distributed by Architectural Computer Services, Inc. (ARCOM).

1. Section Identification: The Specifications use Section numbers and titles to help cross-referencing in the Contract Documents. Sections in the Project Manual are in numeric sequence; however, the sequence is incomplete because all available Section numbers are not used. Consult the table of contents at the beginning of the Project Manual to determine numbers and names of Sections in the Contract Documents.
2. Division 1: Sections in Division 1 govern the execution of the Work of all Sections in the Specifications.

B. Specification Content: The Specifications use certain conventions for the style of language and the intended meaning of certain terms, words, and phrases when used in particular situations. These conventions are as follows:

1. Abbreviated Language: Language used in the Specifications and other Contract Documents is abbreviated. Words and meanings shall be interpreted as appropriate. Words implied, but not stated, shall be inferred as the sense requires. Singular words shall be interpreted as plural, and plural words shall be interpreted as singular where applicable as the context of the Contract Documents indicates.
2. Imperative mood and streamlined language are generally used in the Specifications. Requirements expressed in the imperative mood are to be performed by Contractor. Occasionally, the indicative or subjunctive mood may be used in the Section Text for

clarity to describe responsibilities that must be fulfilled indirectly by Contractor or by others when so noted.

a. The words "shall," "shall be," or "shall comply with," depending on the context, are implied where a colon (:) is used within a sentence or phrase.

PART 2 - PRODUCTS (Not Used)

PART 3 - EXECUTION (Not Used)

END OF SECTION 011000

Prevailing

Wage

Rates

Project: Fairview Cemetery Waterline

Minimum Rates and Classifications
for Heavy/Highway Construction

ID#: **H** 22351

Connecticut Department of Labor
Wage and Workplace Standards Division

By virtue of the authority vested in the Labor Commissioner under provisions of Section 31-53 of the General Statutes of Connecticut, as amended, the following are declared to be the prevailing rates and welfare payments and will apply only where the contract is advertised for bid within 20 days of the date on which the rates are established. Any contractor or subcontractor not obligated by agreement to pay to the welfare and pension fund shall pay this amount to each employee as part of his/her hourly wages.

Project Number: 3887

Project Town: New Britain

FAP Number:

State Number:

Project: Fairview Cemetery Waterline

CLASSIFICATION	Hourly Rate	Benefits
01) Asbestos/Toxic Waste Removal Laborers: Asbestos removal and encapsulation (except its removal from mechanical systems which are not to be scrapped), toxic waste removers, blasters. **See Laborers Group 5 and 7**		
1) Boilermaker	33.79	34% + 8.96
1a) Bricklayer, Cement Masons, Cement Finishers, Plasterers, Stone Masons	33.48	28.76
2) Carpenters, Piledrivermen	32.00	24.42

As of: Wednesday, July 06, 2016

Project: Fairview Cemetery Waterline

2a) Diver Tenders	32.00	24.42
3) Divers	40.46	24.42
03a) Millwrights	32.47	24.84
4) Painters: (Bridge Construction) Brush, Roller, Blasting (Sand, Water, etc.), Spray	46.95	20.15
4a) Painters: Brush and Roller	32.02	20.15
4b) Painters: Spray Only	35.02	20.15
4c) Painters: Steel Only	34.02	20.15

As of: Wednesday, July 06, 2016

Project: Fairview Cemetery Waterline

4d) Painters: Blast and Spray	35.02	20.15
4e) Painters: Tanks, Tower and Swing	34.02	20.15
5) Electrician (Trade License required: E-1,2 L-5,6 C-5,6 T-1,2 L-1,2 V-1,2,7,8,9)	37.50	25.06+3% of gross wage
6) Ironworkers: Ornamental, Reinforcing, Structural, and Precast Concrete Erection	35.22	31.99 + a
7) Plumbers (Trade License required: (P-1,2,6,7,8,9 J-1,2,3,4 SP-1,2) and Pipefitters (Including HVAC Work) (Trade License required: S-1,2,3,4,5,6,7,8 B-1,2,3,4 D-1,2,3,4 G-1, G-2, G-8, G-9)	40.62	29.71
----LABORERS---- -		
8) Group 1: Laborer (Unskilled), Common or General, acetylene burner, concrete specialist	28.55	18.90

As of: Wednesday, July 06, 2016

Project: Fairview Cemetery Waterline

9) Group 2: Chain saw operators, fence and guard rail erectors, pneumatic tool operators, powdermen	28.80	18.90
10) Group 3: Pipelayers	29.05	18.90
11) Group 4: Jackhammer/Pavement breaker (handheld); mason tenders (cement/concrete), catch basin builders, asphalt rakers, air track operators, block paver, curb setter and forklift operators	29.05	18.90
12) Group 5: Toxic waste removal (non-mechanical systems)	30.55	18.90
13) Group 6: Blasters	30.30	18.90
Group 7: Asbestos/lead removal, non-mechanical systems (does not include leaded joint pipe)	29.55	18.90
Group 8: Traffic control signalmen	16.00	18.90

As of: Wednesday, July 06, 2016

Project: Fairview Cemetery Waterline

Group 9: Hydraulic Drills	29.30	18.90

----LABORERS (TUNNEL CONSTRUCTION, FREE AIR). Shield Drive and Liner Plate Tunnels in Free Air.----

13a) Miners, Motormen, Mucking Machine Operators, Nozzle Men, Grout Men, Shaft & Tunnel Steel & Rodmen, Shield & Erector, Arm Operator, Cable Tenders	32.22	18.90 + a
13b) Brakemen, Trackmen	31.28	18.90 + a

----CLEANING, CONCRETE AND CAULKING TUNNEL----

14) Concrete Workers, Form Movers, and Strippers	31.28	18.90 + a
15) Form Erectors	31.60	18.90 + a

As of: Wednesday, July 06, 2016

Project: Fairview Cemetery Waterline

----ROCK SHAFT LINING, CONCRETE, LINING OF SAME AND TUNNEL IN FREE AIR:----

16) Brakemen, Trackmen, Tunnel Laborers, Shaft Laborers	31.28	18.90 + a
17) Laborers Topside, Cage Tenders, Bellman	31.17	18.90 + a
18) Miners	32.22	18.90 + a

----TUNNELS, CAISSON AND CYLINDER WORK IN COMPRESSED AIR: ----

18a) Blaster	38.53	18.90 + a
19) Brakemen, Trackmen, Groutman, Laborers, Outside Lock Tender, Gauge Tenders	38.34	18.90 + a

As of: Wednesday, July 06, 2016

Project: Fairview Cemetery Waterline

20) Change House Attendants, Powder Watchmen, Top on Iron Bolts	36.41	18.90 + a
21) Mucking Machine Operator	39.11	18.90 + a

----TRUCK DRIVERS----(*see note below)

Two axle trucks	28.83	21.39 + a
Three axle trucks; two axle ready mix	28.93	21.39 + a
Three axle ready mix	28.98	21.39 + a
Four axle trucks, heavy duty trailer (up to 40 tons)	29.03	21.39 + a

As of: Wednesday, July 06, 2016

Project: Fairview Cemetery Waterline

Four axle ready-mix	29.08	21.39 + a
Heavy duty trailer (40 tons and over)	29.28	21.39 + a
Specialized earth moving equipment other than conventional type on-the road trucks and semi-trailer (including Euclids)	29.08	21.39 + a
----POWER EQUIPMENT OPERATORS----		
Group 1: Crane handling or erecting structural steel or stone, hoisting engineer (2 drums or over), front end loader (7 cubic yards or over), Work Boat 26 ft. & Over, Tunnel Boring Machines. (Trade License Required)	38.55	23.55 + a
Group 2: Cranes (100 ton rate capacity and over); Excavator over 2 cubic yards; Piledriver ($3.00 premium when operator controls hammer); Bauer Drill/Caisson. (Trade License Required)	38.23	23.55 + a
Group 3: Excavator/Backhoe under 2 cubic yards; Cranes (under 100 ton rated capacity), Gradall; Master Mechanic; Hoisting Engineer (all types of equipment where a drum and cable are used to hoist or drag material regardless of motive power of operation), Rubber Tire Excavator (Drott-1085 or similar);Grader Operator; Bulldozer Fine Grade (slopes, shaping, laser or GPS, etc.). (Trade License Required)	37.49	23.55 + a

As of: Wednesday, July 06, 2016

Project: Fairview Cemetery Waterline

Group 4: Trenching Machines; Lighter Derrick; Concrete Finishing Machine; CMI Machine or Similar; Koehring Loader (Skooper)	37.10	23.55 + a
Group 5: Specialty Railroad Equipment; Asphalt Paver; Asphalt Spreader; Asphalt Reclaiming Machine; Line Grinder; Concrete Pumps; Drills with Self Contained Power Units; Boring Machine; Post Hole Digger; Auger; Pounder; Well Digger; Milling Machine (over 24" Mandrell)	36.51	23.55 + a
Group 5 continued: Side Boom; Combination Hoe and Loader; Directional Driller.	36.51	23.55 + a
Group 6: Front End Loader (3 up to 7 cubic yards); Bulldozer (rough grade dozer).	36.20	23.55 + a
Group 7: Asphalt Roller; Concrete Saws and Cutters (ride on types); Vermeer Concrete Cutter; Stump Grinder; Scraper; Snooper; Skidder; Milling Machine (24" and Under Mandrel).	35.86	23.55 + a
Group 8: Mechanic, Grease Truck Operator, Hydroblaster, Barrier Mover, Power Stone Spreader; Welder; Work Boat under 26 ft.; Transfer Machine.	35.46	23.55 + a
Group 9: Front End Loader (under 3 cubic yards), Skid Steer Loader regardless of attachments (Bobcat or Similar); Fork Lift, Power Chipper; Landscape Equipment (including hydroseeder).	35.03	23.55 + a

As of: Wednesday, July 06, 2016

Project: Fairview Cemetery Waterline

Group 10: Vibratory Hammer, Ice Machine, Diesel and Air Hammer, etc.	32.99	23.55 + a
Group 11: Conveyor, Earth Roller; Power Pavement Breaker (whiphammer), Robot Demolition Equipment.	32.99	23.55 + a
Group 12: Wellpoint Operator.	32.93	23.55 + a
Group 13: Compressor Battery Operator.	32.35	23.55 + a
Group 14: Elevator Operator; Tow Motor Operator (Solid Tire No Rough Terrain).	31.21	23.55 + a
Group 15: Generator Operator; Compressor Operator; Pump Operator; Welding Machine Operator; Heater Operator.	30.80	23.55 + a
Group 16: Maintenance Engineer/Oiler	30.15	23.55 + a

As of: Wednesday, July 06, 2016

Project: Fairview Cemetery Waterline

Group 17: Portable asphalt plant operator; portable crusher plant operator; portable concrete plant operator.	34.46	23.55 + a
Group 18: Power Safety Boat; Vacuum Truck; Zim Mixer; Sweeper; (minimum for any job requiring CDL license).	32.04	23.55 + a

**NOTE: SEE BELOW

----LINE CONSTRUCTION----(Railroad Construction and Maintenance)----

20) Lineman, Cable Splicer, Technician	45.43	6.25% + 20.70
21) Heavy Equipment Operator	40.89	6.25% + 18.56
22) Equipment Operator, Tractor Trailer Driver, Material Men	38.62	6.25% + 17.99

As of: Wednesday, July 06, 2016

Project: Fairview Cemetery Waterline

23) Driver Groundmen	24.99	6.25% + 11.81
23a) Truck Driver	34.07	6.25% + 16.60

----LINE CONSTRUCTION----

24) Driver Groundmen	30.92	6.5% + 9.70
25) Groundmen	22.67	6.5% + 6.20
26) Heavy Equipment Operators	37.10	6.5% + 10.70
27) Linemen, Cable Splicers, Dynamite Men	41.22	6.5% + 12.20

As of: Wednesday, July 06, 2016

Project: Fairview Cemetery Waterline

28) Material Men, Tractor Trailer Drivers, Equipment Operators	35.04	6.5% + 10.45

As of: Wednesday, July 06, 2016

Project: Fairview Cemetery Waterline

Welders: Rate for craft to which welding is incidental.

**Note: Hazardous waste removal work receives additional $1.25 per hour for truck drivers.*

***Note: Hazardous waste premium $3.00 per hour over classified rate*

ALL Cranes: When crane operator is operating equipment that requires a fully licensed crane operator to operate he receives an extra $3.00 premium in addition to the hourly wage rate and benefit contributions:

1) Crane handling or erecting structural steel or stone; hoisting engineer (2 drums or over)

2) Cranes (100 ton rate capacity and over) Bauer Drill/Caisson

3) Cranes (under 100 ton rated capacity)

Crane with 150 ft. boom (including jib) - $1.50 extra
Crane with 200 ft. boom (including jib) - $2.50 extra
Crane with 250 ft. boom (including jib) - $5.00 extra
Crane with 300 ft. boom (including jib) - $7.00 extra
Crane with 400 ft. boom (including jib) - $10.00 extra

All classifications that indicate a percentage of the fringe benefits must be calculated at the percentage rate times the "base hourly rate".

Apprentices duly registered under the Commissioner of Labor's regulations on "Work Training Standards for Apprenticeship and Training Programs" Section 31-51-d-1 to 12, are allowed to be paid the appropriate percentage of the prevailing journeymen hourly base and the full fringe benefit rate, providing the work site ratio shall not be less than one full-time journeyperson instructing and supervising the work of each apprentice in a specific trade.

~~Connecticut General Statute Section 31-55a: Annual Adjustments to wage rates by contractors doing state work ~~

The Prevailing wage rates applicable to this project are subject to annual adjustments each July 1st for the duration of the project.

Each contractor shall pay the annual adjusted prevailing wage rate that is in effect each July 1st, as posted by the Department of Labor.

It is the contractor's responsibility to obtain the annual adjusted prevailing wage rate increases directly from the Department of Labor's website.

The annual adjustments will be posted on the Department of Labor's Web page: www.ct.gov/dol.

The Department of Labor will continue to issue the initial prevailing wage rate schedule to the Contracting Agency for the project.

All subsequent annual adjustments will be posted on our Web Site for contractor access.

Contracting Agencies are under no obligation pursuant to State labor law to pay any increase due to the annual adjustment provision.

As of: Wednesday, July 06, 2016

Project: Fairview Cemetery Waterline

Effective October 1, 2005 - Public Act 05-50: any person performing the work of any mechanic, laborer, or worker shall be paid prevailing wage

All Person who perform work ON SITE must be paid prevailing wage for the appropriate mechanic, laborer, or worker classification.

All certified payrolls must list the hours worked and wages paid to All Persons who perform work ON SITE regardless of their ownership i.e.: (Owners, Corporate Officers, LLC Members, Independent Contractors, et. al)

Reporting and payment of wages is required regardless of any contractual relationship alleged to exist between the contractor and such person.

~~Unlisted classifications needed for work not included within the scope of the classifications listed may be added after award only as provided in the labor standards contract clause (29 CFR 5.5 (a) (1) (ii)).

Please direct any questions which you may have pertaining to classification of work and payment of prevailing wages to the Wage and Workplace Standards Division, telephone (860)263-6790.

As of: Wednesday, July 06, 2016

SECTION 012300 - ALTERNATES

PART 1 - GENERAL

1.1 RELATED DOCUMENTS

A. Drawings and general provisions of the Contract, including General and Supplementary Conditions and other Division 1 Specification Sections, apply to this Section.

1.2 SUMMARY

A. This Section includes administrative and procedural requirements for alternates.

1.3 DEFINITIONS

A. Alternate: An amount proposed by bidders and stated on the Bid Form for certain work defined in the Bidding Requirements that may be added to the Base Bid amount if Owner decides to accept a corresponding change either in the amount of construction to be completed or in the products, materials, equipment, systems, or installation methods described in the Contract Documents.

1. The cost or credit for each alternate is the net addition to the Contract Sum to incorporate alternate into the Work. No other adjustments are made to the Contract Sum.

1.4 PROCEDURES

A. Coordination: Modify or adjust affected adjacent work as necessary to completely integrate work of the alternate into Project.

1. Include as part of each alternate, miscellaneous devices, accessory objects, and similar items incidental to or required for a complete installation whether or not indicated as part of alternate.

B. Notification: Immediately following award of the Contract, notify each party involved, in writing, of the status of each alternate. Indicate if alternates have been accepted, rejected, or deferred for later consideration. Include a complete description of negotiated modifications to alternates.

C. Execute accepted alternates under the same conditions as other work of the Contract.

D. Schedule: A Schedule of Alternates is included at the end of this Section.

PART 2 - PRODUCTS (Not Used)

PART 3 - EXECUTION

3.1 SCHEDULE OF ALTERNATES

1. Alternate No. 1 – Granite Posts.
2. Alternate No. 2 – Concrete Pads.

END OF SECTION 012300

SECTION 020000 – GENERAL SITEWORK

PART 1 - GENERAL

1.1 RELATED DOCUMENTS

A. Drawings and general provisions of the Contract, including General and Supplementary Conditions and other Division 1 Specification Sections, apply to this Section.

1.2 REFERENCES

A. Form 816: State of Connecticut Department of Transportation Standard Specifications for Roads, Bridges, and Incidental Construction.

1.3 AS-BUILT PLANS

A. Site Contractor shall submit "As-Built" plans at the conclusion of the project

1.4 DESCRIPTION

A. This project involves the provision and installation of water lines and water faucets.

1.5 QUALITY ASSURANCE

A. Contractor to:

1. Obtain and pay for all required inspections, permits and fees. Provide notices required by governmental authorities.
2. Comply with all applicable local, state and federal requirements regarding materials, methods of work and disposal of excess and waste materials.

1.6 GENERAL JOB CONDITIONS

A. Locate and identify existing underground and overhead services and utilities within contract limit work areas. Provide adequate means of protection of utilities and services designated to remain. Repair utilities damage during sitework operations at Contractor's expense.

B. Protect and maintain all existing utility appurtenances and improvements except items designated for removal.

C. When uncharted or incorrectly charted underground piping or other utilities and services are encountered during sitework operations, notify the applicable utility company immediately to obtain procedure directions. Cooperate with the applicable utility company in maintaining active service operation.

D. Locate, protect and maintain bench marks, monuments, control points and project engineering reference points. Re-establish disturbed or destroyed items at Contractor's expense.

E. Perform sitework operations to assure minimum interference with streets, walks and other adjacent facilities.

F. Obtain written permission when required to close or obstruct driveways, walks or adjacent facilities. Provide alternative routes around closed or obstructed traffic ways when required.

G. Control dust caused by the work with calcium chloride conforming to ASTM D-98, or water. Special care shall be taken by the Contractor to control dust and debris due to construction. Dampen surfaces prior to significant earthwork or other grading operations and clean the site on a regular basis to minimize unsightly or dangerous debris.

H. Protect existing building, paving and other services or facilities on site and adjacent to the site from damage caused by sitework operation. Cost of repair and restoration of damaged items shall be at the Contractor's expense.

I. Coordinate all work of each section with related work of other sections. Failure to coordinate properly will not reduce the obligation to meet the standards of acceptance of the various elements of work contained herein.

J. Examine all work that the work of each section is contingent upon and report any deficiencies to the Owner's Representative. Commencement of work will be construed to mean complete acceptance of the preparatory work of others. No adjustment will be made for discrepancies brought to the Owner's Representative attention after work has begun.

1.7 TRAFFIC MAINTENANCE, SAFETY AND PROTECTION

A. The contractor shall provide for maintenance and protection of traffic, including permits and plans as required per the City of New Britain.

B. Provide, place, move, maintain and dismantle such barricades, warning signs and lights as necessary to adequately protect the work and provide for public safety.

C. Furnish flagmen or police as required for the proper direction and control of traffic during the construction period.

1.8 STANDARD SPECIFICATIONS

A. All reference to the Standard Specifications refers to CT DOT Form 816. A copy of these specifications shall be available on site at all times.

PART 2 - PRODUCTS

2.1 MATERIALS AND EQUIPMENT

A. As selected by Contractor, except as indicated.

PART 3 - EXECUTION

3.1 PREPARATION

A. Examine the areas and conditions under which sitework is performed. Do not proceed with the work until unsatisfactory conditions are corrected.

END OF SECTION 020000

SECTION 221113 – WATER DISTRIBUTION

PART 1 - GENERAL

1.1 RELATED DOCUMENTS

A. Drawings and general provisions of the Contract, including General and Supplementary Conditions and other Division 1 Specification Sections, apply to this Section.

1.2 SUMMARY

A. This Section includes water-distribution piping and specialties outside the building for the following:

1. Water services.
2. Fire-service mains.

1.3 REFERENCES

A. Form 816: State of Connecticut Department of Transportation Standard Specifications for Roads, Bridges, and Incidental Construction.

B. City of New Britain Standard Specifications for Municipal Construction, Prepared by the City of New Britain Water Department, dated July 2011.

1.4 DEFINITIONS

A. Water Service: Exterior domestic-water piping.

1.5 SUBMITTALS

A. Product Data: For the following:

1. Piping and fittings.
2. Valves and accessories.
3. Restraint.
4. RPD
5. Enclosure

1.6 QUALITY ASSURANCE

A. Regulatory Requirements:

1. Comply with requirements of the City of New Britain Standard Specifications For Municipal Construction, dated July 2011.
2. Comply with standards of the City of New Britain Standard Specifications For Municipal Construction, dated July 2011 for potable-water-service piping, including materials, installation, testing, and disinfection.

B. Piping materials shall bear label, stamp, or other markings of specified testing agency.

1.7 DELIVERY, STORAGE AND HANDLING

A. Preparation for Transport: Prepare valves according to the following:

1. Ensure that valves are dry and internally protected against rust and corrosion.
2. Protect valves against damage to threaded ends and flange faces.
3. Set valves in best position for handling. Set valves closed to prevent rattling.

B. During Storage: Use precautions for valves according to the following:

1. Do not remove end protectors unless necessary for inspection; then reinstall for storage.
2. Protect from weather. Store indoors and maintain temperature higher than ambient dew-point temperature. Support off the ground or pavement in watertight enclosures when outdoor storage is necessary.

C. Deliver piping with factory-applied end caps. Maintain end caps through shipping, storage, and handling to prevent pipe-end damage and to prevent entrance of dirt, debris, and moisture.

D. Protect stored piping from moisture and dirt. Elevate above grade. Do not exceed structural capacity of floor when storing inside.

E. Protect flanges, fittings, and specialties from moisture and dirt.

1.8 PROJECT CONDITIONS

A. Existing Utilities: Do not interrupt utilities serving facilities occupied by Owner or others unless permitted under the following conditions and then only after arranging to provide temporary utility services according to requirements indicated:

1. Notify Landscape Architect not less than two days in advance of proposed utility interruptions.
2. Do not proceed with utility interruptions without Architect's written permission.

1.9 COORDINATION

A. Coordinate connection to water main with New Britain Water Department.

PART 2 - PRODUCTS

2.1 POLYVINYL CHLORIDE PIPE (PVC)

A. ASTM D1785/D2665 Schedule 40 PVC and Schedule 80 (sleeves) Pipe: Per City of New Britain Specifications.

2.2 GATE VALVES

A. AWWA, C509, per City of New Britain Approved Materials List.

2.3 BACKFLOW PREVENTER

A. The backflow preventer shall be model 825Y reduced pressure device consisting of two (2) independently operating, spring loaded, “Y” pattern check valves and one (1) hydraulically dependent differential relief valve. The device shall automatically reduce the pressure in the “zone” between the check valves to at least five (5) psi lower than the inlet pressure. Should the differential between the upstream and the zone of the unit drop to two (2) psi, the differential relief valve shall open and maintain the proper differential.

B. Mainline valve body and caps, including relief valve body and cover, shall be bronze. Check valve moving member shall be center stem guided. All hydraulic sensing passages shall be internally located within the mainline and relief valve bodies and relief valve cover. Check valve and relief valve components shall be constructed so that they be serviced without removing the valve body from the line. Shut-off valves shall be fully protected.

C. The device shall be rated to 175 psi water working pressure and water temperature range from thirty two (32) degrees to 140 degrees Fahrenheit.

2.4 METER PITS

A. Per New Britain Water Department standards.

2.5 RPD ENCLOSURE

A. Strongbox expanded metal backflow enclosure per New Britain Water Department standards.

PART 3 - EXECUTION

3.1 PIPING INSTALLATION

A. Install piping with a vibratory plow where possible.
B. Provide minimum cover over top of underground piping according to the following:

1. Circuit Piping: 18 Inches (450mm)
2. Drain Piping: 12 Inches (300mm)
3. Sleeves: 24 Inches (600mm)

3.2 RESTRAINT INSTALLATION

A. Install restraint for tees, bends, and valves.

3.3 WATER-METER INSTALLATION

A. Contractor to provide and install water meter pit, piping, and specialties according to the City of New Britain's written requirements.

B. Water meter by New Britain Water Department.

3.4 RPD ENCLOSURE

A. Secure enclosure to concrete pad per manufacturer's recommendation.

3.5 FIELD QUALITY CONTROL

A. Piping Tests: Conduct piping tests before joints are covered and after thrust blocks have hardened sufficiently. Fill pipeline 24 hours before testing and apply test pressure to stabilize system. Use only potable water.

B. Hydrostatic Tests: Per City of New Britain Requirements.

3.6 IDENTIFICATION

A. Install continuous underground detectable warning tape during backfilling of trench for underground water-service piping. Locate below finished grade, directly over piping. See Division 2 Section "Earthwork" for underground warning tapes.

3.7 CLEANING

A. Clean and disinfect water-distribution piping per City of New Britain Requirements.

END OF SECTION 221113

SECTION 321313 – CEMENT CONCRETE PAVEMENT

PART 1 - GENERAL

1.1 RELATED DOCUMENTS

A. Drawings and general provisions of the Contract, including General and Supplementary Conditions and other Division 1 Specification Sections, apply to this Section.

1.2 REFERENCES

A. Form 816: State of Connecticut Department of Transportation Standard Specifications for Roads, Bridges, and Incidental Construction.

B. ASTM C 94/C 94M" - Standard Specification for ready Mixed Concrete.

1.3 SUMMARY

A. This Section includes exterior cement concrete.

B. Related Sections include the following:

1. Division 32 Section "Gravel" for base material.

1.4 DEFINITIONS

A. Cementitious Materials: Portland cement alone or in combination with one or more of blended hydraulic cement, expansive hydraulic cement, fly ash and other pozzolans, ground granulated blast-furnace slag, and silica fume.

1.5 QUALITY ASSURANCE

A. Installer Qualifications: An experienced installer who has completed pavement work similar in material, design, and extent to that indicated for this Project and whose work has resulted in construction with a record of successful in-service performance.

B. Unless otherwise specified, use materials, measure, batch, and mix concrete materials and concrete and deliver concrete in approved equipment, all in conformance with ASTM C 94/C 94M".

C. Manufacturer Qualifications: Manufacturer of ready-mixed concrete products complying with ASTM C 94 requirements for production facilities and equipment.

1. Manufacturer must be certified according to the National Ready Mix Concrete Association's Plant Certification Program.

D. Source Limitations: Obtain each type or class of cementitious material of the same brand from the same manufacturer's plant and each aggregate from one source.

E. ACI Publications: Comply with ACI 301, "Specification for Structural Concrete," unless modified by the requirements of the Contract Documents.

F. Mockups: Cast mockups of full-size sections of concrete pavement to demonstrate typical joints, surface finish, texture, color, and standard of workmanship.

1. The first section of poured concrete may serve as a mockup. All joints and finishes shall be included
2. Notify Landscape Architect seven days in advance of dates and times when mockups will be constructed.
3. Obtain Landscape Architect's approval of mockups before continuing construction.
4. Maintain approved mockups during construction in an undisturbed condition as a standard for judging the completed pavement.
5. Demolish and remove non-approved mockups from the site when directed by Landscape Architect.
6. Approved mockups may become part of the completed Work if undisturbed at time of Substantial Completion.

1.6 PROJECT CONDITIONS

A. Traffic Control: Maintain access for vehicular and pedestrian traffic as required for other construction activities.

PART 2 - PRODUCTS

2.1 FORMS

A. General: Forms shall be of sufficient strength to maintain alignment without bowing.

B. Form Materials: metal or metal-framed plywood,.

1. Use flexible or curved forms for curves of a radius 100 feet or less.

C. Form-Release Agent: Commercially formulated form-release agent that will not bond with, stain, or adversely affect concrete surfaces and will not impair subsequent treatments of concrete surfaces.

2.2 STEEL REINFORCEMENT

A. Plain-Steel Welded Wire Fabric: ASTM A 185, fabricated from as-drawn steel wire into flat sheets.

B. Reinforcing Bars: ASTM A 615/A 615M, Grade 60 (Grade 420); deformed.

C. Bar Supports: Bolsters, chairs, spacers, and other devices for spacing, supporting, and fastening reinforcement bars, welded wire fabric, and dowels in place. Manufacture bar supports according to CRSI's "Manual of Standard Practice" from steel wire, plastic, or precast concrete or fiber-reinforced concrete of greater compressive strength than concrete.

2.3 CONCRETE MATERIALS

A. Generally conform to Form 816, M.03.01 class F and ASTM C94.

B. General: Use the same brand and type of cementitious material from the same manufacturer throughout the Project.

C. Portland Cement: ASTM C 150 gray Portland cement, Type II

D. Water: ASTM C 94.

E. Normal-Weight Aggregates: ASTM C 33, Class 4S, uniformly graded. Provide aggregates from a single source with documented service-record data of at least 10 years' satisfactory service in similar paving applications and service conditions using similar aggregates and cementitious materials. Conform to Form 816 M.03.01, 1& 2, grading C.

1. Maximum Coarse-Aggregate Size: 3/4 inch nominal.
2. Fine Aggregate: Free of materials with deleterious reactivity to alkali in cement.

2.4 ADMIXTURES

A. General: Admixtures certified by manufacturer to contain not more than 0.1 percent water-soluble chloride ions by mass of cement and to be compatible with other admixtures.

B. Air-Entraining Admixture: AASHTO M 154.

C. Water-Reducing Admixture: ASTM C 494, Type A.

D. High-Range, Water-Reducing Admixture: ASTM C 494, Type F.

E. Water-Reducing and Accelerating Admixture: ASTM C 494, Type E.

F. Water-Reducing and Retarding Admixture: ASTM C 494, Type D.

2.5 CURING MATERIALS

A. Absorptive Cover: AASHTO M 182, Class 2, burlap cloth made from jute or kenaf, weighing approximately 9 oz./sq. yd. dry.

B. Evaporation Retarder: Waterborne, monomolecular film forming, manufactured for application to fresh concrete.

C. Clear, Waterborne, Membrane-Forming Curing Compound: ASTM C 309, Type 1, Class B, dissipating type.

1. AASHTO M 148 type 2 class b.

2.6 CONCRETE MIXES

A. Proportion mixes to provide concrete with the following properties:

1. Compressive Strength (28 Days): 4000 psi.
2. Slump Limit: 4 inches.
3. Water-cementitious materials ratio: .44.
4. Air entrainment: 6%.
5. Cementous materials 658 1b/cy.

B. Cementitious Materials: Limit percentage, by weight, of cementitious materials other than portland cement in concrete as follows:

1. Fly Ash: 15 percent for plain concrete. No fly ash shall be used in colored concrete.
2. Combined Fly Ash and Pozzolan: 25 percent.
3. Ground Granulated Blast-Furnace Slag: 50 percent.
4. Combined Fly Ash or Pozzolan, and Ground Granulated Blast-Furnace Slag: 50 percent portland cement minimum, with fly ash or pozzolan not exceeding 25 percent.

C. Add air-entraining admixture at manufacturer's prescribed rate to result in concrete at point of placement having an air content as follows within a tolerance of plus or minus 1.0 percent:

1. Air Content: 6.0 percent for 3/4-inch maximum aggregate.

2.7 CONCRETE MIXING

A. Ready-Mixed Concrete: Comply with requirements and with ASTM C 94 and Form 816 M.03.01

1. When air temperature is between 85 deg F and 90 deg F, reduce mixing and delivery time from 1-1/2 hours to 75 minutes; when air temperature is above 90 deg F, reduce mixing and delivery time to 60 minutes.

PART 3 - EXECUTION

3.1 PREPARATION

A. Proof-roll prepared subbase surface to check for unstable areas and verify need for additional compaction. Proceed with pavement only after nonconforming conditions have been corrected and subgrade is ready to receive pavement.

B. Remove loose material from compacted subbase surface immediately before placing concrete.

3.2 EDGE FORMS AND SCREED CONSTRUCTION

A. Set, brace, and secure edge forms, bulkheads, and intermediate screed guides for pavement to required lines, grades, and elevations. Install forms to allow continuous progress of work and so forms can remain in place at least 24 hours after concrete placement.

B. Clean forms after each use and coat with form release agent to ensure separation from concrete without damage.

3.3 STEEL REINFORCEMENT

A. General: Comply with CRSI's "Manual of Standard Practice" for fabricating reinforcement and with recommendations in CRSI's "Placing Reinforcing Bars" for placing and supporting reinforcement.

B. Clean reinforcement of loose rust and mill scale, earth, ice, or other bond-reducing materials.

C. Arrange, space, and securely tie bars and bar supports to hold reinforcement in position during concrete placement. Maintain minimum cover to reinforcement.

D. Install welded wire fabric in lengths as long as practicable. Lap adjoining pieces at least one full mesh, and lace splices with wire. Offset laps of adjoining widths to prevent continuous laps in either direction.

3.4 CONCRETE PLACEMENT

A. Inspection: Before placing concrete, inspect and complete formwork installation, reinforcement steel, and items to be embedded or cast in. Notify other trades to permit installation of their work.

B. Remove snow, ice, or frost from subbase surface and reinforcement before placing concrete. Do not place concrete on frozen surfaces.

C. Moisten subbase to provide a uniform dampened condition at the time concrete is placed. Do not place concrete around manholes or other structures until they are at the required finish elevation and alignment.

D. Comply with requirements and with recommendations in Form 816, Section 4.01.03 for measuring, mixing, transporting, and placing concrete.

E. Deposit and spread concrete in a continuous operation between transverse joints. Do not push or drag concrete into place or use vibrators to move concrete into place.

F. Consolidate concrete by mechanical vibrating equipment supplemented by hand-spading, rodding, or tamping. Use equipment and procedures to consolidate concrete according to recommendations in ACI 309R.

1. Consolidate concrete along face of forms and adjacent to transverse joints with an internal vibrator. Keep vibrator away from joint assemblies, reinforcement, or side forms. Use only square-faced shovels for hand-spreading and consolidation. Consolidate with care to prevent dislocating reinforcement, dowels, and joint devices.

G. Place concrete in two operations; strike off initial pour for entire width of placement and to the required depth below finish surface. Lay welded wire fabric or fabricated bar mats immediately in final position. Place top layer of concrete, strike off, and screed.

1. Remove and replace portions of bottom layer of concrete that have been placed more than 15 minutes without being covered by top layer, or use bonding agent if approved by Landscape Architect.

H. Screed pavement surfaces with a straightedge and strike off. Commence initial floating using bull floats or darbies to form an open textured and uniform surface plane before excess moisture or bleed water appears on the surface. Do not further disturb concrete surfaces before beginning finishing operations or spreading dry-shake surface treatments.

I. Cold-Weather Placement: Comply with ACI 306.1 and as follows. Protect concrete work from physical damage or reduced strength that could be caused by frost, freezing actions, or low temperatures.

1. When air temperature has fallen to or is expected to fall below 40 deg F, uniformly heat water and aggregates before mixing to obtain a concrete mixture temperature of not less than 50 deg F and not more than 80 deg F at point of placement.
2. Do not use frozen materials or materials containing ice or snow.
3. Do not use calcium chloride, salt, or other materials containing antifreeze agents or chemical accelerators, unless otherwise specified and approved in mix designs.

J. Hot-Weather Placement: Place concrete according to recommendations in ACI 305R and as follows when hot-weather conditions exist:

1. Cool ingredients before mixing to maintain concrete temperature at time of placement below 90 deg F. Chilled mixing water or chopped ice may be used to control

temperature, provided water equivalent of ice is calculated to total amount of mixing water. Using liquid nitrogen to cool concrete is Contractor's option.

2. Cover reinforcement steel with water-soaked burlap so steel temperature will not exceed ambient air temperature immediately before embedding in concrete.
3. Fog-spray forms, reinforcement steel, and subgrade just before placing concrete. Keep subgrade moisture uniform without standing water, soft spots, or dry areas.

3.5 CONCRETE FINISHING

A. General: Wetting of concrete surfaces during screeding, initial floating, or finishing operations is prohibited. Conform to Form 816 4.01.03-F-5.

B. Float Finish: Begin the second floating operation when bleed-water sheen has disappeared and concrete surface has stiffened sufficiently to permit operations. Float surface with power-driven floats or by hand floating if area is small or inaccessible to power units. Finish surfaces to true planes. Cut down high spots and fill low spots. Refloat surface immediately to uniform granular texture.

1. Medium-to-Coarse-Textured Broom Finish: Provide a coarse finish by striating float-finished concrete surface 1/16 to 1/8 inch deep with a stiff-bristled broom, perpendicular to line of traffic.

3.6 CONCRETE CURING

A. AIR CURING IS NOT ACCEPTABLE.

B. General: Protect freshly placed concrete from premature drying and excessive cold or hot temperatures. Comply with ACI 306.1 for cold-weather protection and follow recommendations in ACI 305R for hot-weather protection during curing. Conform to Form 816 4.01.03--(7). Cure for 7 days minimum. Begin curing within 2 hours of placing concrete.

C. Evaporation Retarder: Apply evaporation retarder to concrete surfaces if hot, dry, or windy conditions cause moisture loss approaching 0.2 lb/sq. ft. x h before and during finishing operations. Apply according to manufacturer's written instructions after placing, screeding, and bull floating or darbying concrete, but before float finishing.

D. Curing Methods: Cure concrete by moisture curing, moisture-retaining-cover curing, curing compound, or a combination of these as follows:

1. Moisture Curing: Keep surfaces continuously moist for not less than seven days with the following materials:

a. Water.
b. Continuous water-fog spray.
c. Absorptive cover, water saturated, and kept continuously wet. Cover concrete surfaces and edges with 12-inch lap over adjacent absorptive covers.

2. Moisture-Retaining-Cover Curing: Cover concrete surfaces with moisture-retaining cover for curing concrete, placed in widest practicable width, with sides and ends lapped at least 12 inches, and sealed by waterproof tape or adhesive. Immediately repair any holes or tears during curing period using cover material and waterproof tape.

3. Curing Compound: Apply uniformly in continuous operation by power spray or roller according to manufacturer's written instructions. Apply in two coats, the second application at right angles to the first. Recoat areas that have been subjected to heavy rainfall within three hours after initial application. Maintain continuity of coating, and repair damage during curing period.

4. Seal all concrete with “Salt Guard” as manufactured by Prosoco or equal. Apply after concrete has cured for a minimum of 14 days

5. Concrete must cure for 30 days minimum prior to freezing temperatures.

3.7 PAVEMENT TOLERANCES

A. Comply with tolerances of ACI 117 and as follows:

1. Elevation: 1/4 inch.
2. Thickness: Plus 3/8 inch, minus 1/4 inch.
3. Surface: Gap below 10-foot- long, unleveled straightedge not to exceed 1/4 inch.
4. Joint Spacing: 3 inches.
5. Contraction Joint Depth: Plus 1/4 inch, no minus.
6. Joint Width: Plus 1/8 inch, no minus.

3.8 REPAIRS AND PROTECTION

A. Remove and replace concrete pavement that is broken, damaged, or defective, or does not meet requirements in this Section.

B. Drill test cores where directed by Landscape Architect when necessary to determine magnitude of cracks or defective areas. Fill drilled core holes in satisfactory pavement areas with portland cement concrete bonded to pavement with epoxy adhesive.

C. Protect concrete from damage. Exclude traffic from pavement for at least 14 days after placement. When construction traffic is permitted, maintain pavement as clean as possible by removing surface stains and spillage of materials as they occur.

D. Maintain concrete pavement free of stains, discoloration, dirt, and other foreign material. Sweep concrete pavement not more than two days before date scheduled for Substantial Completion inspections.

E. Fill all small stress cracks with joint filler

END OF SECTION 321313

FAIRVIEW CEMETERY

Proposed Water System

Smalley Street New Britain, CT
City Bid #3887

Project Site

NTS

CONTENTS

L-1.0	Key Plan
L-1.1, L-1.2, L-1.3, L-1.4, L-1.5	Site Plans
C-1.0	Water Supply Details

Scope of Work:

Remove existing hose bibs, and install new water lines and hose bibs.

CONSTRUCTION DRAWINGS 7.8.2016

Prepared for The City of New Britain, Connecticut

Mayor Erin E. Stewart

Prepared by:

TO DESIGN LLC
Creating Meaningful Outdoor Spaces
Site Design
Landscape Architecture
Urban Design
114 West Main Street, Suite 202
New Britain, CT 06051
P 860.612.1700
www.todesignllc.com

100 0 100 200

1" = 100'

G:\1Drawing Files\6158 - Fairview Cemetery water\Dwg\6158-SitePlan.dwg 7/5/2016 3:10:00 PM mdelhalis

TO DESIGN LLC

Creating Meaningful Outdoor Spaces

Site Design
Landscape Architecture
Urban Design

114 West Main Street, Suite 202
New Britain, CT 06051
P 860.612.1700
www.todesignllc.com

Prepared For:

City of New Britain

Consultant

PROPOSED WATER SYSTEM:

FAIRVIEW CEMETERY

SMALLEY STREET **NEW BRITAIN, CT**

Sheet Description:

Overall Existing Condtions Plan

Rev:

Issue Date: JULY 8, 2016

Scale: AS NOTED

Drawn by: MD

Project number: 6158

Sheet #: L-1.0

LEGEND

EXISTING		PROPOSED
	PROPERTY LINE	
	BUILDING	
40	SECTION NUMBER	
	PAVEMENT LINE	
101	CONTOUR 1 FT	
105	CONTOUR 5 FT	
+105.5	SPOT GRADE	
	HOSE BIBS	
W	WATER LINE	W
	TREES	

LAYOUT NOTES

1. THE CONTRACTOR SHALL COMPLY WITH ALL STATE, LOCAL AND FEDERAL REGULATIONS.
2. MATERIALS AND CONSTRUCTION PROCEDURES SHALL COMPLY WITH CT DOT FORM 816 AND THE CITY OF NEW BRITAIN SPECIFICATIONS.
3. CONTRACTOR TO SECURE ALL NECESSARY TRADE PERMITS.
4. NEW PAVEMENT TO MEET LINE & GRADE OF EXISTING PAVEMENTS.
5. CONTRACTOR IS RESPONSIBLE FOR ANY DAMAGE DUE TO CONSTRUCTION ACTIVITIES.
6. LOAM AND SEED ALL DISTURBED AREAS NOT COVERED BY OTHER IMPROVEMENTS.
7. ALL LINES AND DIMENSIONS ARE PARALLEL OR PERPENDICULAR TO THE LINES FROM WHICH THEY ARE MEASURED.
8. ALL LOCATIONS WHERE EXISTING CURBING, BITUMINOUS CONCRETE ROADWAY OR CONCRETE ROADWAY OR CONCRETE SIDEWALK ABUT NEW CONSTRUCTION, THE EDGE OF THE EXISTING CURB OR PAVEMENT SHALL BE SAW CUT TO PROVIDE A CLEAN, SMOOTH EDGE. TACK COAT EXPOSED EDGES OF EXISTING CONCRETE PRIOR TO PLACEMENT OF NEW BITUMINOUS CONCRETE PAVEMENT.
9. FIELD ADJUSTMENTS MUST BE APPROVED BY THE OWNER'S REPRESENTATIVE AND APPROPRIATE MUNICIPAL OFFICIALS PRIOR TO CONSTRUCTION.
10. CONTRACTOR IS RESPONSIBLE FOR VERIFYING THE VERTICAL AND HORIZONTAL POSITION OF EXISTING UTILITIES PRIOR TO CONSTRUCTION.
11. CONTRACTOR SHALL CONTROL DUST CAUSED BY HIS OPERATIONS BY APPLYING WATER OR DUST PALLIATIVE, OTHER THAN CALCIUM CHLORIDE.
12. CONTRACTOR SHALL CONTROL NOISE TO AS GREAT AN EXTENT AS POSSIBLE. ALL POWER EQUIPMENT USED DURING CONSTRUCTION SHALL BE EQUIPPED WITH MUFFLERS.
13. MANUFACTURED ITEMS SHALL BE INSTALLED, CONNECTED AND CLEANED ACCORDING TO THE MANUFACTURERS DIRECTIONS.
14. PRIOR TO PROJECT CLOSE-OUT, CONTRACTOR SHALL REMOVE ALL DEBRIS AND EXCESS MATERIALS FROM SITE. ALSO, ANY DAMAGE TO FIELD OR FACTORY APPLIED FINISHES SHALL BE REPAIRED.

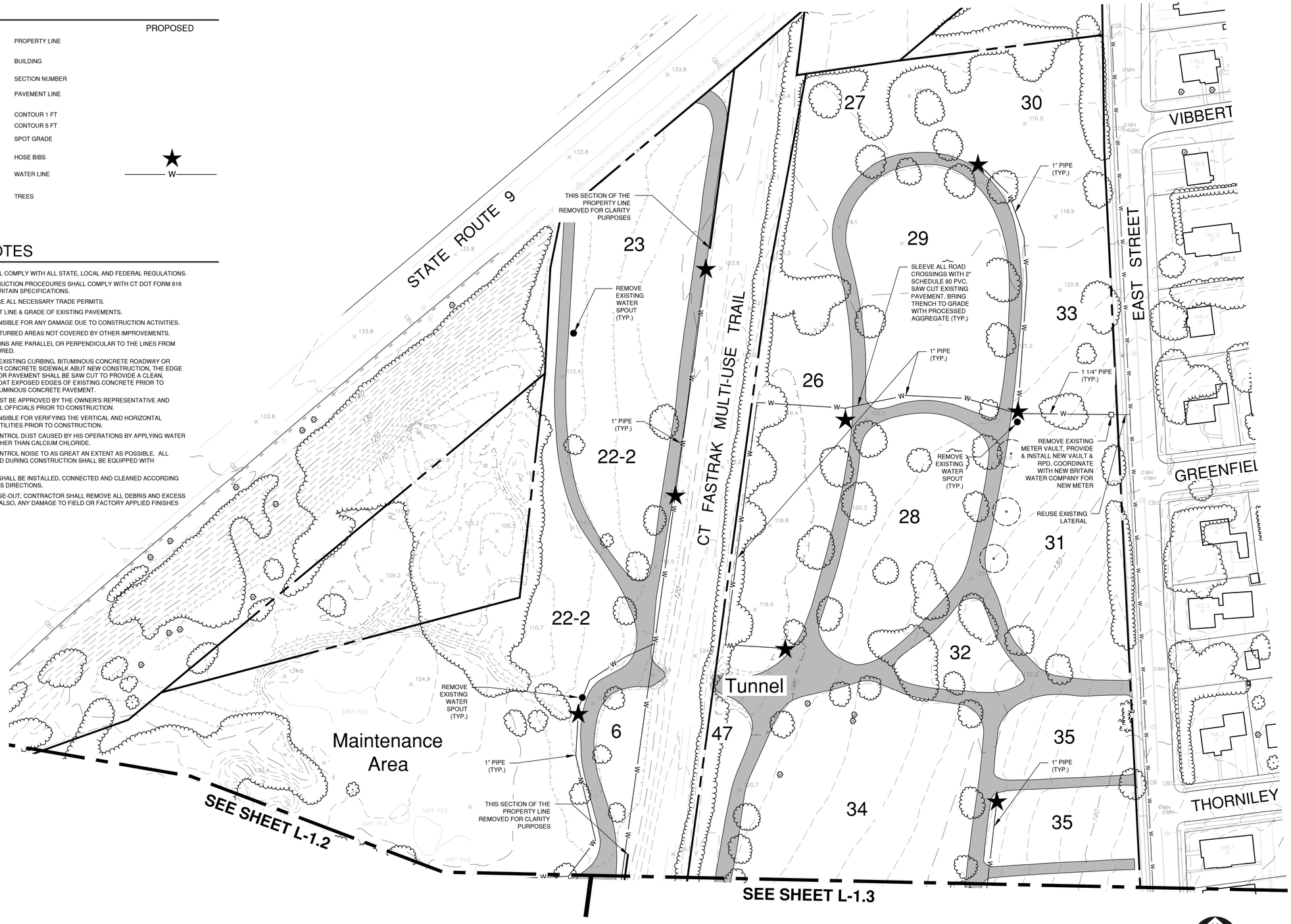

NOTE

THE DESIGN INTENT IS TO INSTALL THE MAJORITY OF THE PIPE WITH A VIBRATORY PLOW PER TYPICAL IRRIGATION SYSTEM INSTALLATION. HOWEVER, SOME DIGGING/TRENCHING MAY BE REQUIRED.

NOTE

SEE SHEET L-1.5 FOR UTILITY NOTES AND DETAILS.

50 0 50 100
1" = 50'

TO DESIGN LLC
Creating Meaningful Outdoor Spaces
Site Design
Landscape Architecture
Urban Design
114 West Main Street, Suite 202
New Britain, CT 06051
P 860.612.1700
www.todesignllc.com

Prepared For:

City of New Britain

Consultant

PROPOSED WATER SYSTEM:
FAIRVIEW CEMETERY
SMALLEY STREET NEW BRITAIN, CT

Sheet Description:

Site Plan

Rev:

Issue Date: JULY 8, 2016

Scale: AS NOTED | Drawn by: MD

Project number: 6158

Sheet #: L-1.1

G:\1Drawing Files\6158 - Fairview Cemetery water\Dwg\6158-SitePlan.dwg 7/5/2016 3:19:08 PM mdehais

LEGEND

EXISTING		PROPOSED
	PROPERTY LINE	
	BUILDING	
40	SECTION NUMBER	
	PAVEMENT LINE	
101	CONTOUR 1 FT	
105	CONTOUR 5 FT	
+105.5	SPOT GRADE	
●	HOSE BIBS	★
W	WATER LINE	W
	TREES	

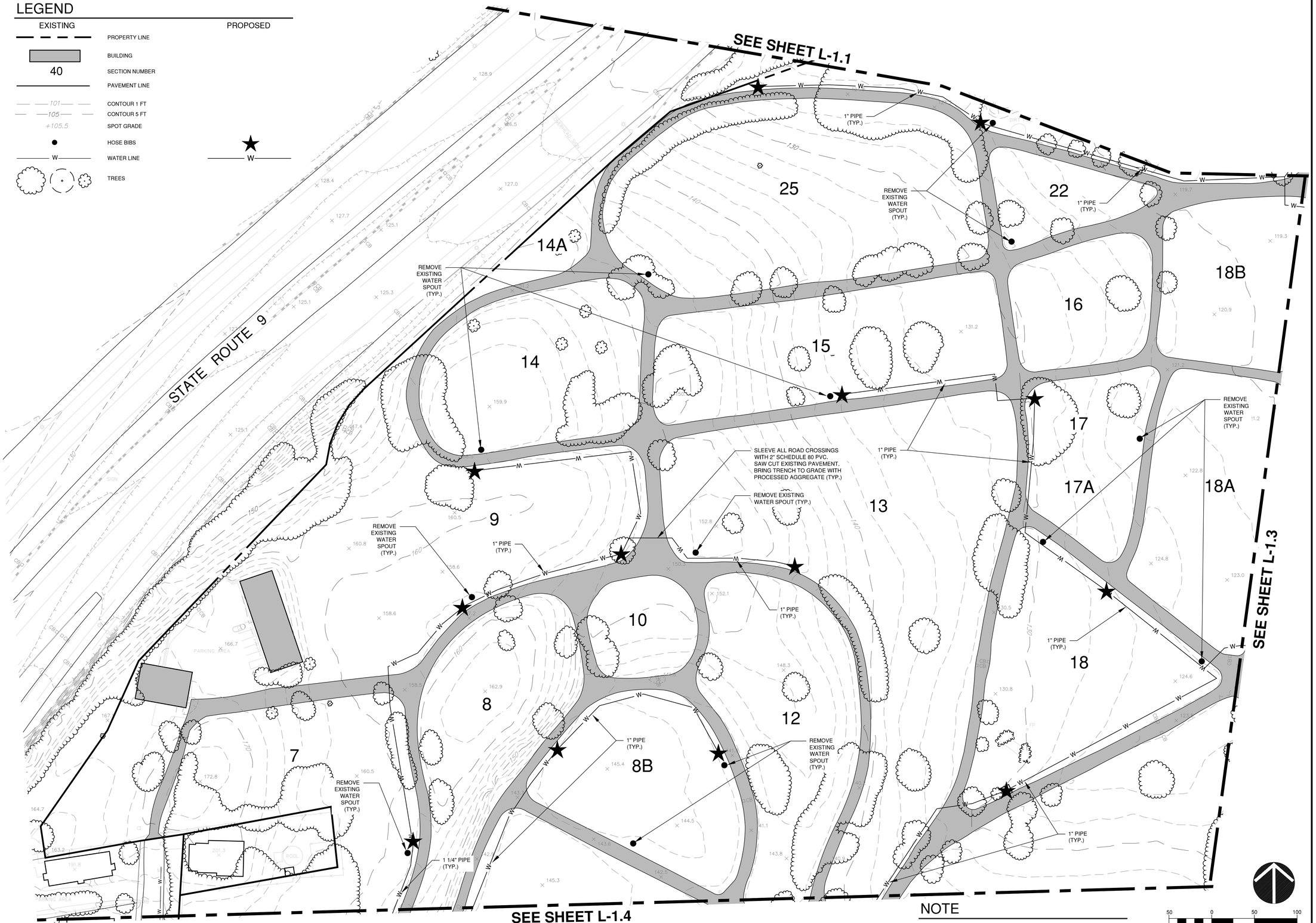

NOTE

SEE SHEET L-1.1 FOR LAYOUT NOTES, AND L-1.5 FOR UTILITY NOTES AND DETAILS.

TO DESIGN LLC

Creating Meaningful Outdoor Spaces

Site Design
Landscape Architecture
Urban Design

114 West Main Street, Suite 202
New Britain, CT 06051
P 860.612.1700
www.todesignllc.com

Prepared For:

City of New Britain

Consultant

PROPOSED WATER SYSTEM:
FAIRVIEW CEMETERY
SMALLEY STREET NEW BRITAIN, CT

Sheet Description:

Site Plan

Rev:

Issue Date: JULY 8, 2016

Scale: AS NOTED

Drawn by: MD

Project number: 6158

Sheet #: L-1.2

G:\1Drawing Files\6158 - Fairview Cemetery water\Dwg\6158-SitePlan.dwg 7/5/2016 3:19:19 PM mdehais

LEGEND

EXISTING		PROPOSED
	PROPERTY LINE	
	BUILDING	
40	SECTION NUMBER	
	PAVEMENT LINE	
101	CONTOUR 1 FT	
105	CONTOUR 5 FT	
+105.5	SPOT GRADE	
	HOSE BIBS	
W	WATER LINE	W
	TREES	

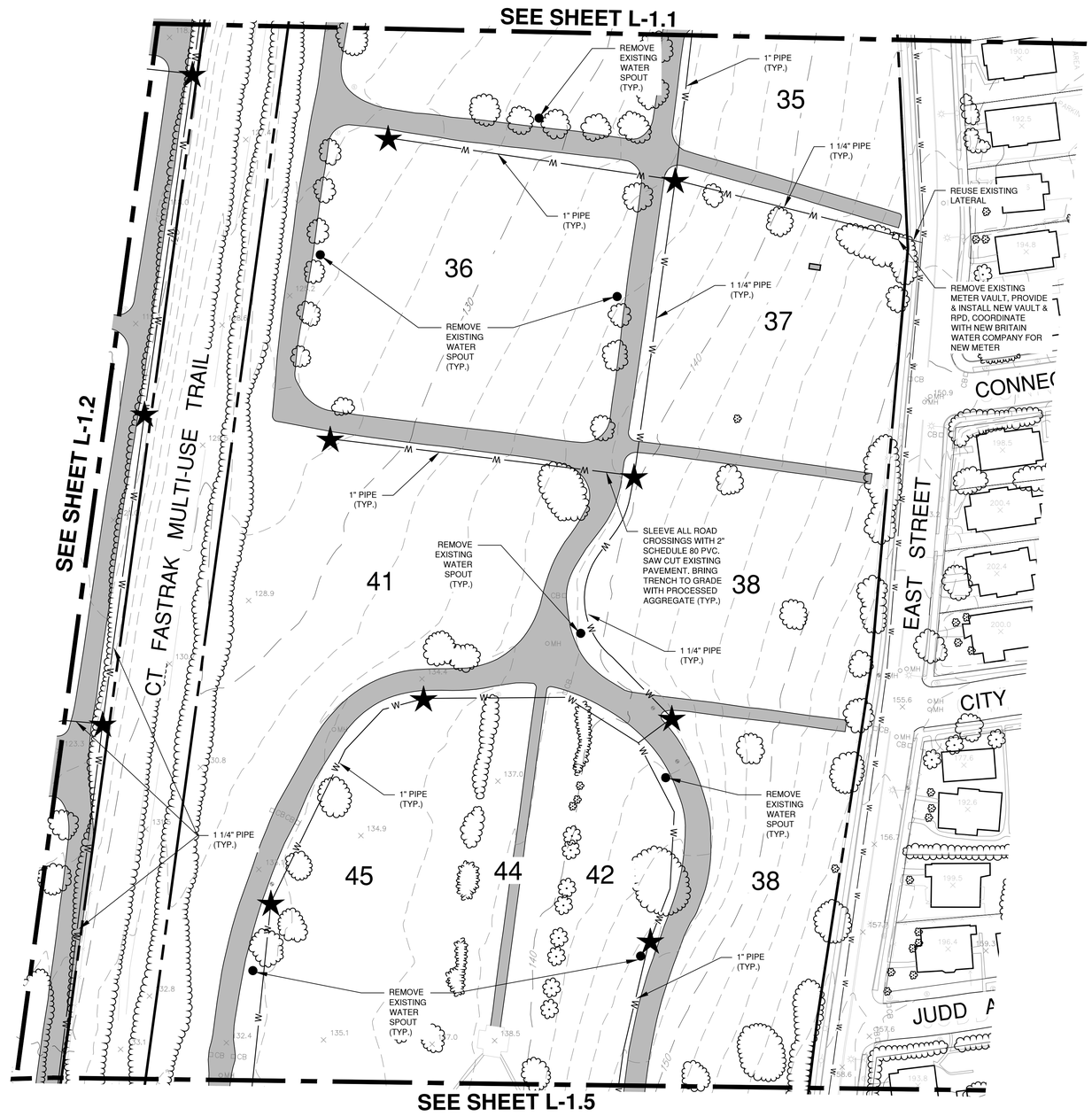

NOTE

SEE SHEET L-1.1 FOR LAYOUT NOTES, AND L-1.5 FOR UTILITY NOTES AND DETAILS.

50 0 50 100
1" = 50'

G:\1Drawing Files\6158 - Fairview Cemetery water\Dwg\6158-SitePlan.dwg 7/5/2016 3:19:28 PM mdehais

TO DESIGN LLC
Creating Meaningful Outdoor Spaces
Site Design
Landscape Architecture
Urban Design
114 West Main Street, Suite 202
New Britain, CT 06051
P 860.612.1700
www.todesignllc.com

Prepared For:

City of New Britain

Consultant

PROPOSED WATER SYSTEM:
FAIRVIEW CEMETERY
SMALLEY STREET NEW BRITAIN, CT

Sheet Description:

Site Plan

Rev:

Issue Date: JULY 8, 2016

Scale: AS NOTED

Drawn by: MD

Project number: 6158

Sheet #: L-1.3

LEGEND

EXISTING		PROPOSED
	PROPERTY LINE	
	BUILDING	
40	SECTION NUMBER	
	PAVEMENT LINE	
101	CONTOUR 1 FT	
105	CONTOUR 5 FT	
+105.5	SPOT GRADE	
●	HOSE BIBS	★
W	WATER LINE	W
	TREES	

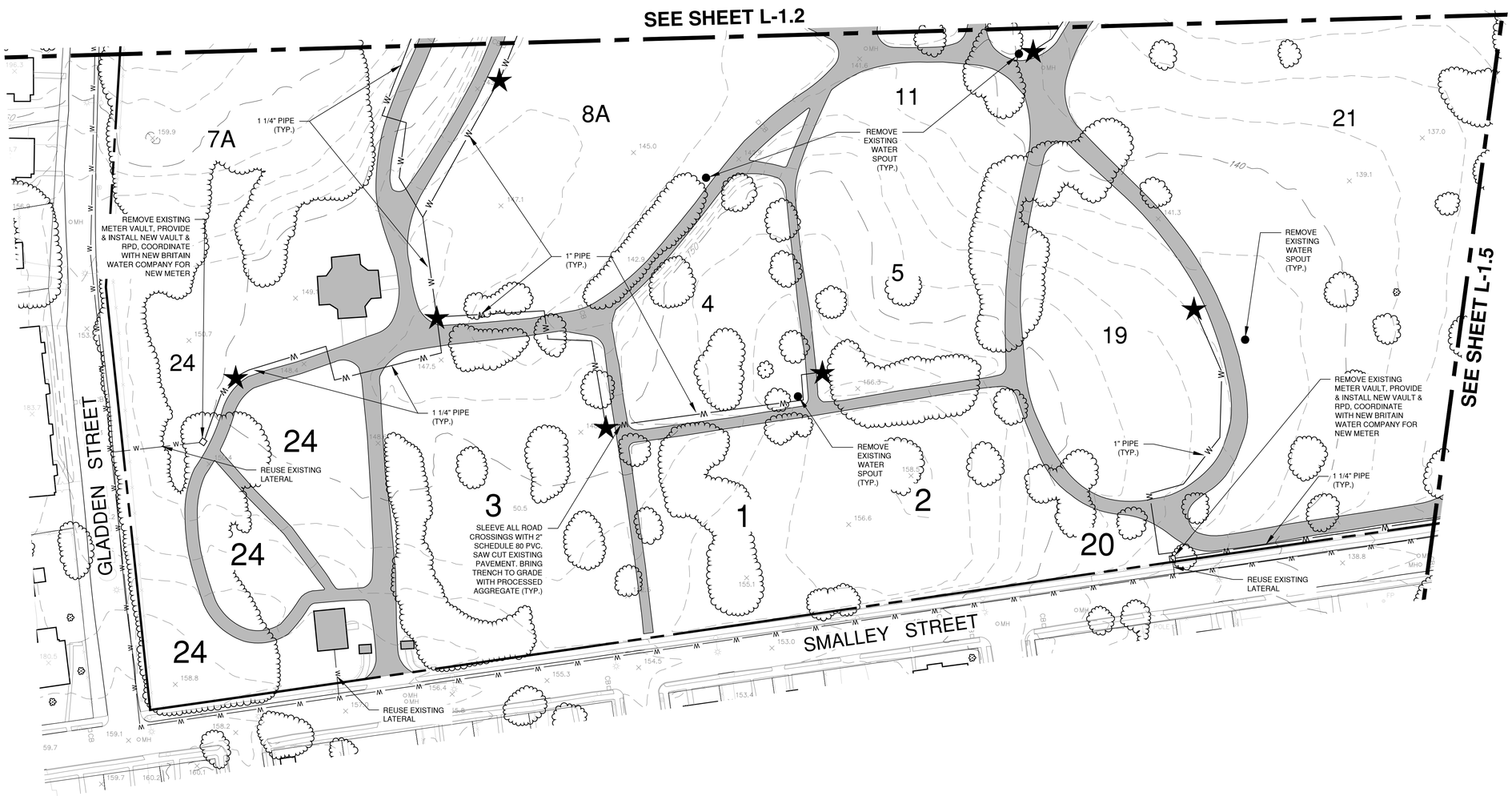

NOTE

SEE SHEET L-1.1 FOR LAYOUT NOTES, AND L-1.5 FOR UTILITY NOTES AND DETAILS.

50 0 50 100
1" = 50'

TO DESIGN LLC
Creating Meaningful Outdoor Spaces
Site Design
Landscape Architecture
Urban Design
114 West Main Street, Suite 202
New Britain, CT 06051
P 860.612.1700
www.todesignllc.com

Prepared For:

City of New Britain

Consultant

PROPOSED WATER SYSTEM:
FAIRVIEW CEMETERY
SMALLEY STREET NEW BRITAIN, CT

Sheet Description:

Site Plan

Rev:

Issue Date: JULY 8, 2016

Scale: AS NOTED

Drawn by: MD

Project number: 6158

Sheet #: L-1.4

G:\1Drawing Files\6158 - Fairview Cemetery water\Dwg\6158-SitePlan.dwg 7/5/2016 3:19:38 PM mdehais

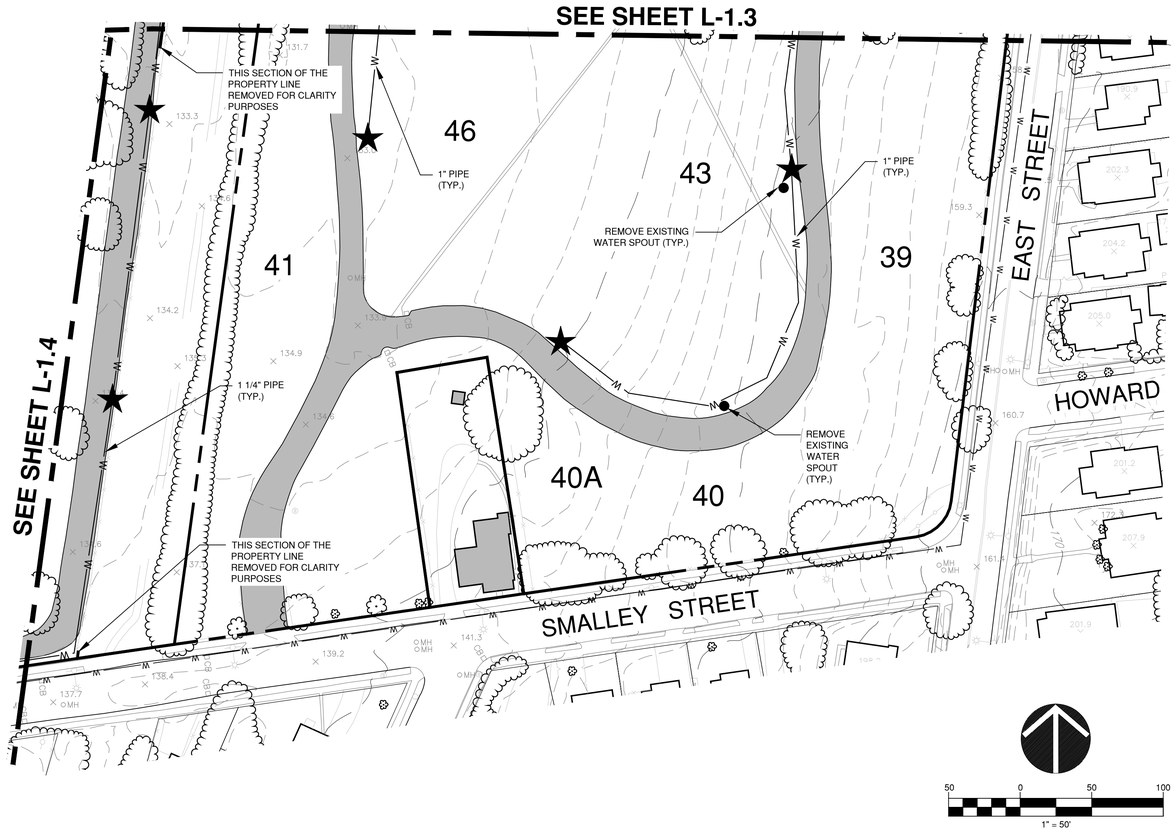

UTILITY NOTES

1. CONTRACTOR TO TAKE AND VERIFY ALL DIMENSIONS AND CONDITIONS OF THE JOB AND BE RESPONSIBLE FOR THE SAME. NOTIFY SITE PLANNER OF DISCREPANCIES PRIOR TO BEGINNING WORK.
2. ADJUST ALL EXISTING AND PROPOSED UTILITY FRAMES, GRATES, MANHOLE COVERS, VALVE BOXES, ETC. TO BE FLUSH WITH THE PROPOSED SURFACE.
3. ALL EXISTING UTILITY LINES TO BE ABANDONED SHALL BE ABANDONED ACCORDING TO UTILITY COMPANY REQUIREMENTS.
4. ALL WORK SHALL BE COMPLETED IN ACCORDANCE WITH APPLICABLE STANDARDS.
5. ALL EXCESS MATERIAL, EXCEPT TOPSOIL, SHALL BE LEGALLY DISPOSED OF OUTSIDE THE PROJECT LIMITS.
6. REFERENCE IS MADE IN THESE DOCUMENTS TO THE STATE OF CONNECTICUT DEPARTMENT OF TRANSPORTATION STANDARD SPECIFICATIONS FOR ROADS, BRIDGES AND INCIDENTAL CONSTRUCTION. FORM 816, 2004 AND SUPPLEMENTS THERETO.
7. DAMAGE TO EXISTING UTILITIES AS A RESULT OF THE CONTRACTOR'S OR ANY OF HIS SUBCONTRACTOR'S ACTIVITIES DURING THE CONSTRUCTION PROCESS SHALL BE REPAIRED AS DIRECTED BY THE ENGINEER AT NO ADDITIONAL COST TO THE OWNER.
8. THE CONTRACTOR SHALL BE RESPONSIBLE FOR ALL DEWATERING DURING THE EXECUTION OF HIS WORK.
9. THE LOCATION OF EXISTING UNDERGROUND UTILITIES IS DEVELOPED FROM THE BEST AVAILABLE INFORMATION. THE ACTUAL LOCATION OF EXISTING UTILITIES SHALL BE VERIFIED BY THE CONTRACTOR PRIOR TO THE START OF EXCAVATION ACTIVITIES.
10. ACCESS AND UTILITIES TO EXISTING FACILITIES MUST BE MAINTAINED BY THE CONTRACTOR AT NO ADDITIONAL COST TO THE OWNER. THE CONTRACTOR MUST MAINTAIN SUFFICIENT TRAVEL LANE(S), APPROVED BY THE OWNER, TO ENABLE ALL EMERGENCY VEHICLES TO ACCESS THE ENTIRE PROJECT SITE.
11. CONTRACTOR TO VERIFY THAT ALL EXISTING UTILITIES TO BE REUSED ARE FUNCTIONAL.

LEGEND

EXISTING		PROPOSED
	PROPERTY LINE	
	BUILDING	
40	SECTION NUMBER	
	PAVEMENT LINE	
101	CONTOUR 1 FT	
105	CONTOUR 5 FT	
+105.5	SPOT GRADE	
	HOSE BIBS	
W	WATER LINE	W
	TREES	

NOTE

SEE SHEET L-1.1 FOR LAYOUT NOTES.

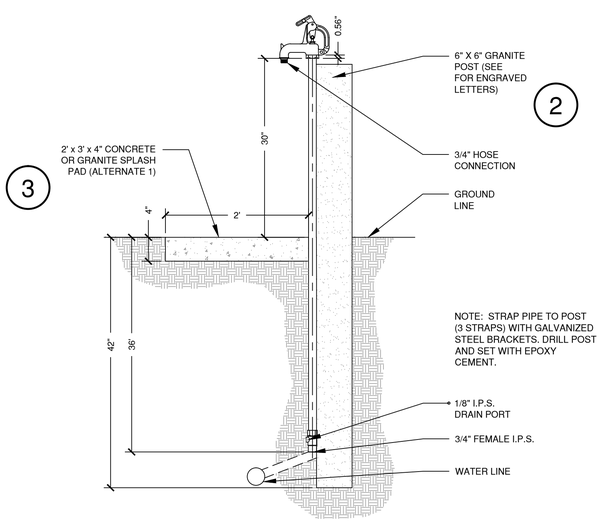

1 FLO-TROL YARD HYDRANT, MODEL Z1397

NOT TO SCALE

ZURN INDUSTRIES, LLC

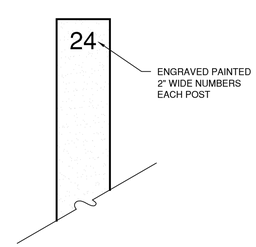

2 ENGRAVED LETTERS ON POST

NOT TO SCALE

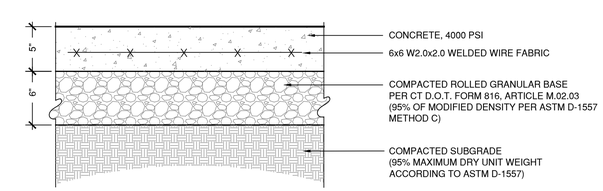

3 CONCRETE PAD

Scale 1 1/2" = 1' -0"

TO DESIGN LLC

Creating Meaningful Outdoor Spaces

Site Design
Landscape Architecture
Urban Design

114 West Main Street, Suite 202
New Britain, CT 06051
P 860.612.1700
www.todesignllc.com

Prepared For:

City of New Britain

Consultant

PROPOSED WATER SYSTEM:

FAIRVIEW CEMETERY

SMALLEY STREET NEW BRITAIN, CT

Sheet Description:

Site Plan

Rev:

Issue Date: JULY 8, 2016

Scale: AS NOTED

Drawn by: MD

Project number: 6158

Sheet #: L-1.5

G:\1Drawing Files\6158 - Fairview Cemetery Water\Dwg\6158-SitePlan.dwg 7/5/2016 3:25:06 PM mdehais

NOTE: BACKFLOW PREVENTER SHALL BE EQUIPPED WITH AN ISOLATION VALVE IN ORDER TO PROVIDE FOR PROPER WINTERIZATION. PRIOR TO BEING EXPOSED TO FREEZING CONDITIONS THE BACKFLOW PREVENTOR SHALL BE WINTERIZED PER MANUFACTURER RECOMMENDATIONS.

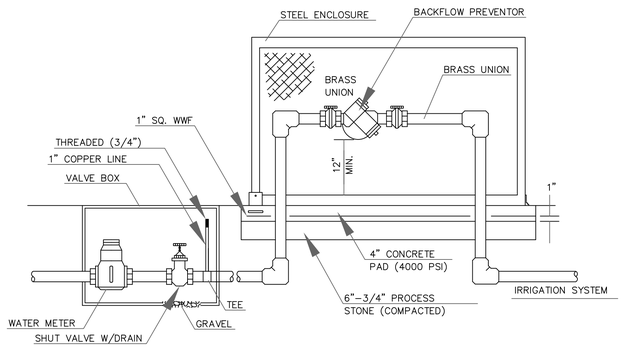

TYPICAL INSTALLATION OFBACKFLOW PREVENTOR DEVICE WITH ENCLOSURE AND VALVE BOX WITH METAL AND SHUT VALVE

NOT TO SCALE

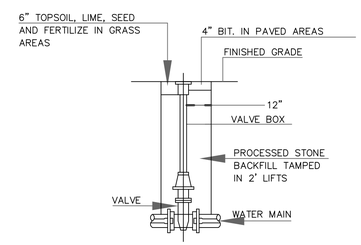

VALVE BOX BACKFILL

NOT TO SCALE

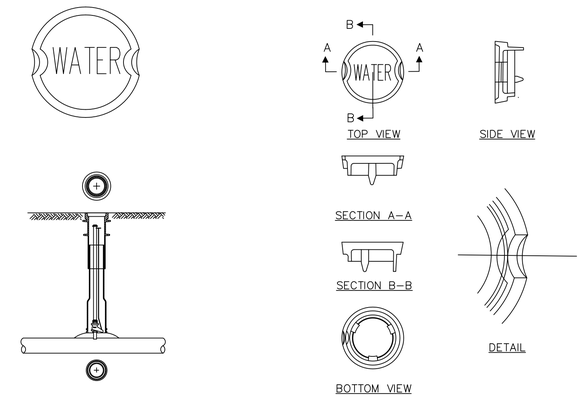

CAST IRON GATE BOX COVER

NOT TO SCALE

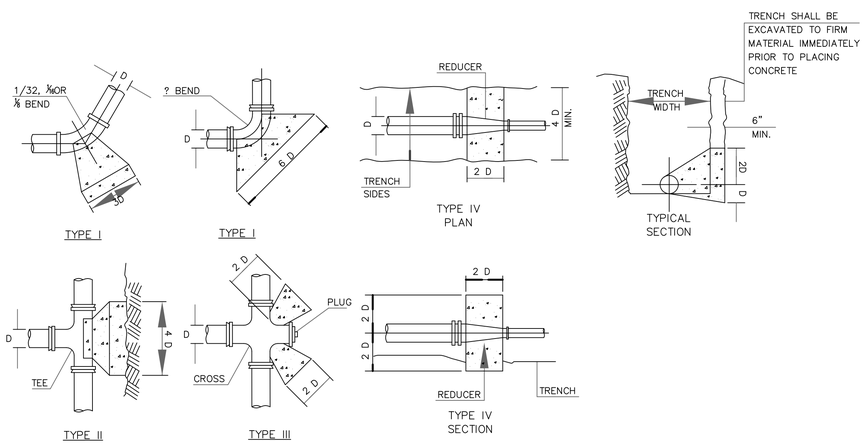

CONCRETE THRUST BLOCK DETAILS

NOT TO SCALE

NOTE: ALL PIPES AND HOSE BIBS SHALL BE WINTERIZED PRIOR TO BEING EXPOSED TO FREEZING CONDITIONS. ALL HOSES SHALL BE REMOVED AND WATER SUPPLY SHALL BE TURNED/CUT OFF PRIOR TO WINTERIZING. INSPECTIONS SHALL BE MADE TO EACH HOSE BIB TO CHECK FOR LEAKS AND DRIPS. ALL LEAKS SHALL BE REPAIRED PRIOR TO WINTERIZATION. ALL HOSE BIBS SHALL BE TURNED ON AND DRAINED COMPLETELY. IF NECESSARY, INSTALL AN INSULATED HOSE BIB COVER FOR ADDITIONAL PROTECTION.

Professional Seal

TO DESIGN LLC

Creating Meaningful Outdoor Spaces

Site Design
Landscape Architecture
Urban Design

114 West Main Street, Suite 202
New Britain, CT 06051
P 860.612.1700

www.todesignllc.com

Prepared For:

City of New Britain

Consultant

PROPOSED WATER SYSTEM:

FAIRVIEW CEMETERY

SMALLEY STREET NEW BRITAIN, CT

Sheet Description:

Water Supply Details

Rev:

Issue Date: JULY 8, 2016

Scale: AS NOTED

Drawn by: EJ

Project number: 6158

Sheet #: C-1.0

G:\1 PROJECTS\3400 Projects\3416 - TO Design - Fairview Cemetery\Drawings\3416.dwg 7/5/2016 12:13:39 PM ejones