04 - MECHANICAL
INDEX OF DRAWINGS

DRAWING NUMBER	DRAWING TITLE	DRAWING NUMBER	DRAWING TITLE
M-001	INDEX OF DRAWINGS		
M-002	REPAIR FACILITY PLAN & DETAILS (EAST GRANBY)		
M-003	MATERIALS LAB FACILITY PLANS & DETAILS - 1 (ROCKY HILL)		
M-004	MATERIALS LAB FACILITY PLANS & DETAILS - 2 (ROCKY HILL)		

THE DESIGN APPEARS TO CONFORM TO APPLICABLE CRITERIA. APPROVAL IS NOT TO BE CONSTRUED TO MEAN THAT ALL ASPECTS OF THE DESIGN HAVE BEEN PERSONALLY CHECKED BY THE UNDERSIGNED.

Digitally signed by Gregory Dorosh, P.E.
Date: 2016.04.19 16:16:29-04'00'

TRANSPORTATION PRINCIPAL ENGINEER

REV.	DATE	REVISION DESCRIPTION	SHEET NO.

THE INFORMATION, INCLUDING ESTIMATED QUANTITIES OF WORK, SHOWN ON THESE SHEETS IS BASED ON LIMITED INVESTIGATIONS BY THE STATE AND IS IN NO WAY WARRANTED TO INDICATE THE CONDITIONS OF ACTUAL QUANTITIES OF WORK WHICH WILL BE REQUIRED.

Plotted Date: 3/8/2016

DESIGNER/DRAFTER: EAM/JAB
CHECKED BY: JAB

STATE OF CONNECTICUT
DEPARTMENT OF TRANSPORTATION

Filename: ...\FD_MSH_MEC_0170_3369_M001.dgn

SIGNATURE/ BLOCK:
OFFICE OF ENGINEERING
APPROVED BY:

PROJECT TITLE:
FACILITIES
GENERATOR REPLACEMENT

TOWN: VARIOUS

DRAWING TITLE: INDEX OF DRAWINGS

PROJECT NO. 170-3369
DRAWING NO. M-001
SHEET NO. 04.01

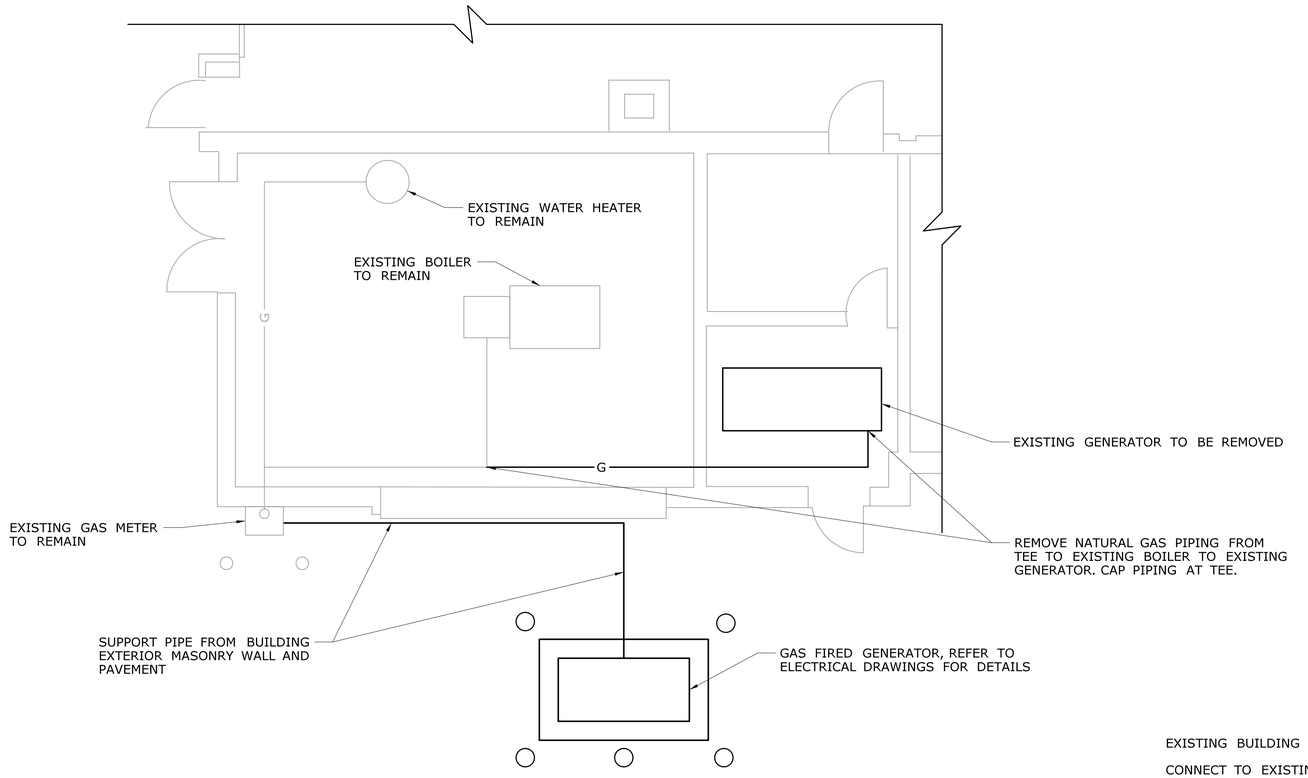

MECHANICAL ROOM DEMOLITION AND INSTALLATION PLAN

SCALE: 1/4" = 1'-0"

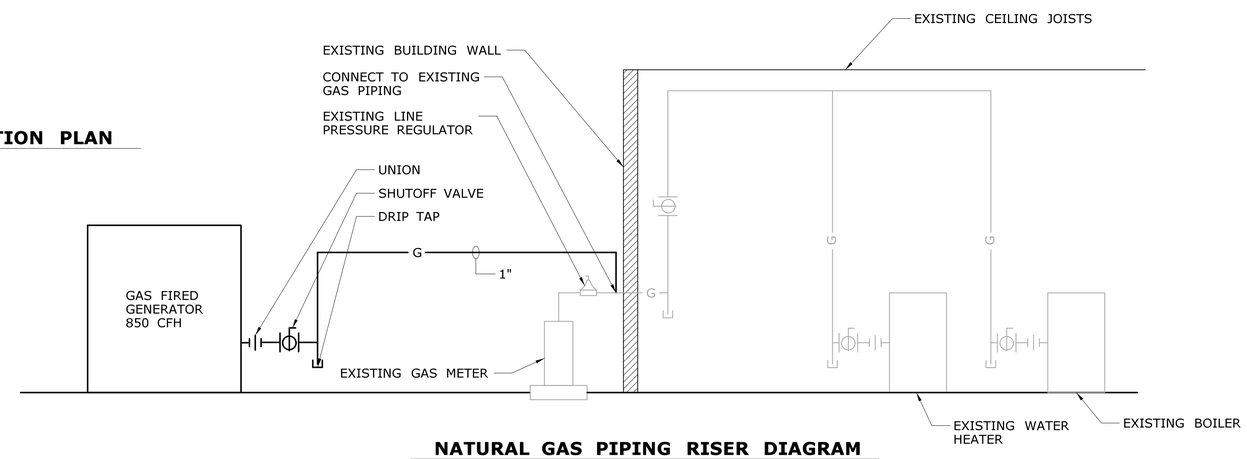

NATURAL GAS PIPING RISER DIAGRAM

NOT TO SCALE

REV.	DATE	REVISION DESCRIPTION	SHEET NO.

THE INFORMATION, INCLUDING ESTIMATED QUANTITIES OF WORK, SHOWN ON THESE SHEETS IS BASED ON LIMITED INVESTIGATIONS BY THE STATE AND IS IN NO WAY WARRANTED TO INDICATE THE CONDITIONS OF ACTUAL QUANTITIES OF WORK WHICH WILL BE REQUIRED.

Plotted Date: 3/8/2016

DESIGNER/DRAFTER: **EAM/JAB**

CHECKED BY: **JAB**

SCALE AS NOTED

STATE OF CONNECTICUT
DEPARTMENT OF TRANSPORTATION

Filename: ...\FD_MSH_MEC_0170_3369_M002.dgn

SIGNATURE/ BLOCK: **OFFICE OF ENGINEERING**

APPROVED BY:

PROJECT TITLE: **FACILITIES GENERATOR REPLACEMENT**

TOWN: **EAST GRANBY**

DRAWING TITLE: **REPAIR FACILITY PLAN & DETAILS**

PROJECT NO. **170-3369**

DRAWING NO. **M-002**

SHEET NO. **04.02**

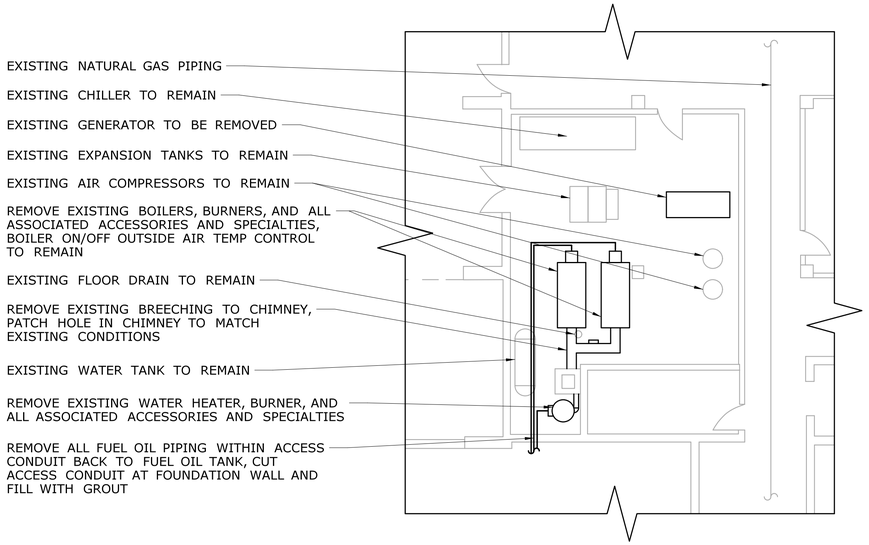

MECHANICAL ROOM DEMOLITION PLAN

SCALE: 1/8" = 1'-0"

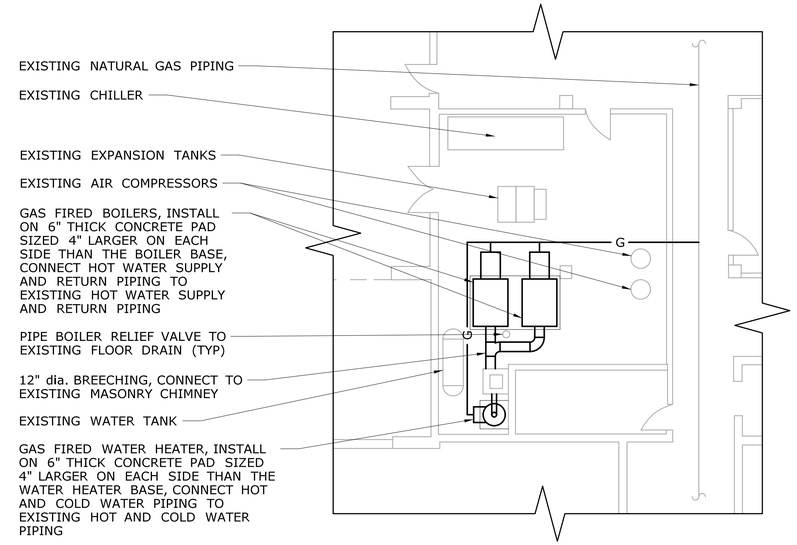

MECHANICAL ROOM INSTALLATION PLAN

SCALE: 1/8" = 1'-0"

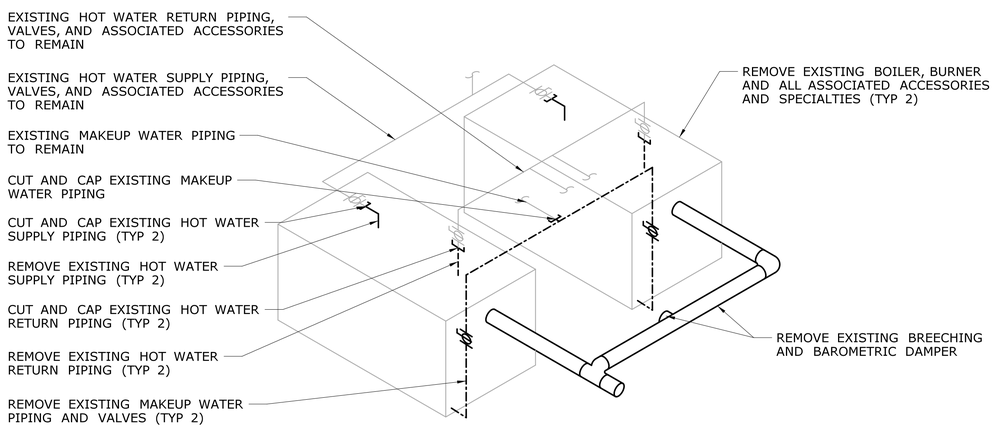

EXISTING BOILER DEMOLITION DIAGRAM

NOT TO SCALE

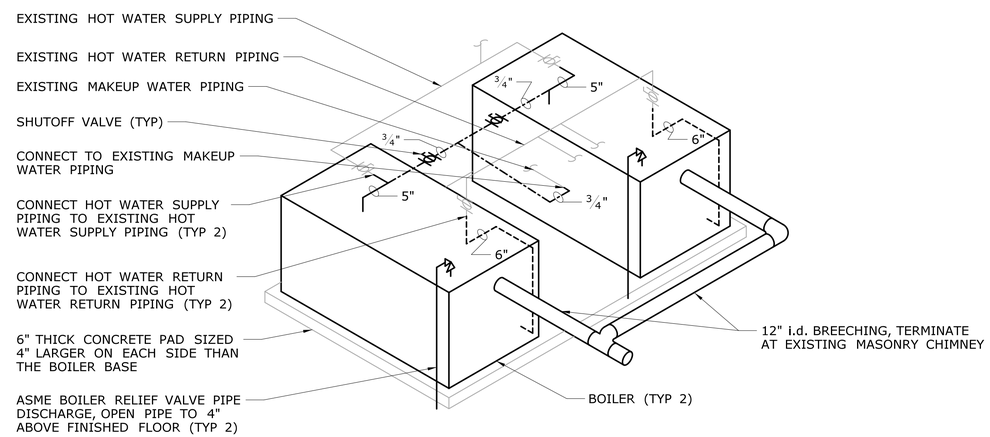

BOILER INSTALLATION DIAGRAM

NOT TO SCALE

NOTE:

1. REFER TO CSI SECTION 230900 AND 230993 FOR CONNECTION OF BOILERS TO EXISTING BUILDING AUTOMATION SYSTEM.

REV.	DATE	REVISION DESCRIPTION	SHEET NO.

THE INFORMATION, INCLUDING ESTIMATED QUANTITIES OF WORK, SHOWN ON THESE SHEETS IS BASED ON LIMITED INVESTIGATIONS BY THE STATE AND IS IN NO WAY WARRANTED TO INDICATE THE CONDITIONS OF ACTUAL QUANTITIES OF WORK WHICH WILL BE REQUIRED.

Plotted Date: 3/8/2016

DESIGNER/DRAFTER: EAM/JAB

CHECKED BY: JAB

SCALE AS NOTED

STATE OF CONNECTICUT
DEPARTMENT OF TRANSPORTATION

Filename: ...\FD..MSH..MEC..0170..3369..M003.dgn

SIGNATURE/BLOCK: OFFICE OF ENGINEERING

APPROVED BY:

PROJECT TITLE: FACILITIES GENERATOR REPLACEMENT

TOWN: ROCKY HILL

DRAWING TITLE: MATERIALS LAB FACILITY PLANS & DETAILS - 1

PROJECT NO. 170-3369

DRAWING NO. M-003

SHEET NO. 04.03

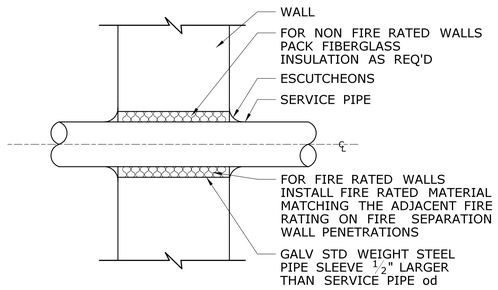

NOTE: SEAL ALL PENETRATIONS AS PER SPECIFICATIONS.

INTERIOR WALL SLEEVE DETAIL

NOT TO SCALE

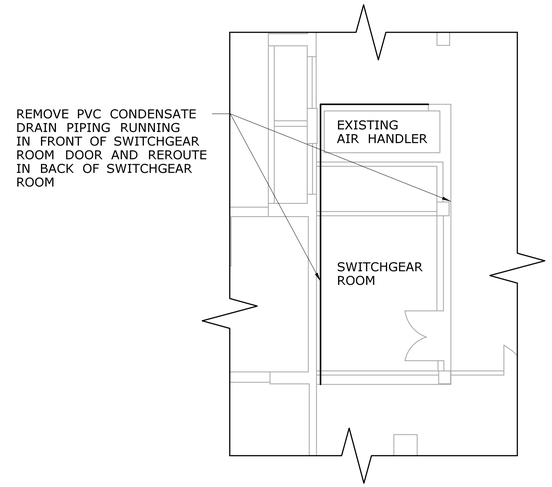

SWITCHGEAR ROOM PLAN

SCALE: 1/8" = 1'-0"

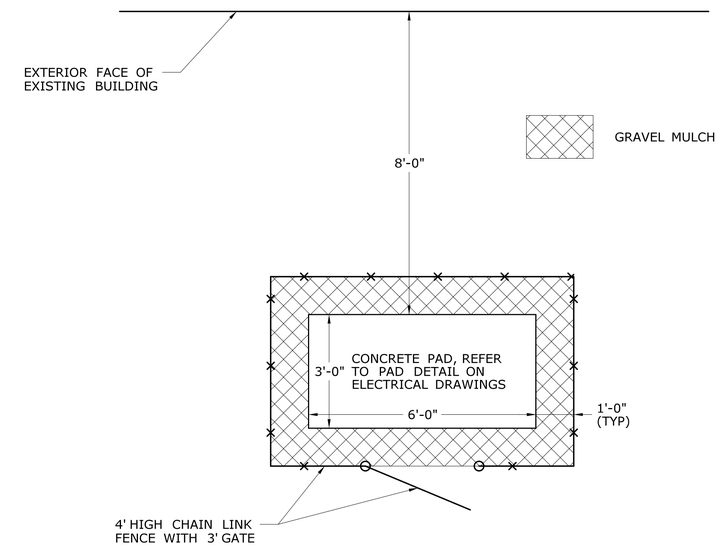

NATURAL GAS METER PLAN

SCALE: 1/8" = 1'-0"

NOTE: COORDINATE METER PAD LOCATION WITH CNG AND GENERATOR INSTALLER.

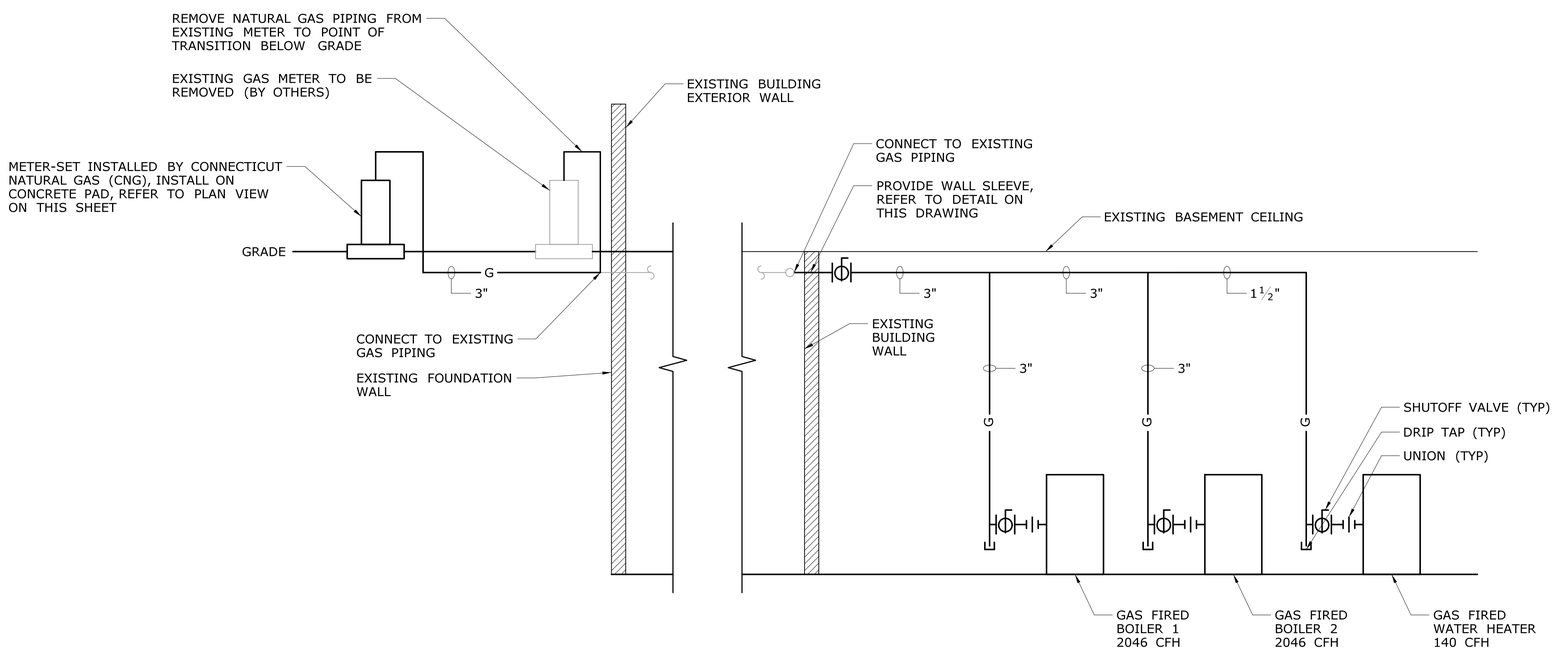

NATURAL GAS PIPING RISER DIAGRAM

NOT TO SCALE

REV.	DATE	REVISION DESCRIPTION	SHEET NO.

THE INFORMATION, INCLUDING ESTIMATED QUANTITIES OF WORK, SHOWN ON THESE SHEETS IS BASED ON LIMITED INVESTIGATIONS BY THE STATE AND IS IN NO WAY WARRANTED TO INDICATE THE CONDITIONS OF ACTUAL QUANTITIES OF WORK WHICH WILL BE REQUIRED.

Plotted Date: 3/8/2016

DESIGNER/DRAFTER: EAM/JAB
CHECKED BY: JAB
SCALE AS NOTED

STATE OF CONNECTICUT
DEPARTMENT OF TRANSPORTATION

Filename: ...\FD_MSH_MEC_0170_3369_M004.dgn

SIGNATURE/BLOCK: OFFICE OF ENGINEERING
APPROVED BY:

PROJECT TITLE: FACILITIES GENERATOR REPLACEMENT

TOWN: ROCKY HILL

DRAWING TITLE: MATERIALS LAB FACILITY PLANS & DETAILS - 2

PROJECT NO. 170-3369
DRAWING NO. M-004
SHEET NO. 04.04