FORM NO. ENG. 6 ED. 11-56

PUB. ROAD DIV. NO.	STATE	TOWN	FED. AID PROJ. NO.	PROJ. NO.	YEAR	ROUTE NO.	SHEET NO.	TOTAL SHEETS
1	CONN.	NEW HAVEN	EAC I-91-1(16)2	92-124	1962	I-91	1	57

CONNECTICUT
STATE HIGHWAY DEPARTMENT
PLAN
FOR
CONSTRUCTION
OF
INTERSTATE ROUTE 91 BRIDGE OVER QUINNIPIAC RIVER
IN THE TOWN OF
NEW HAVEN

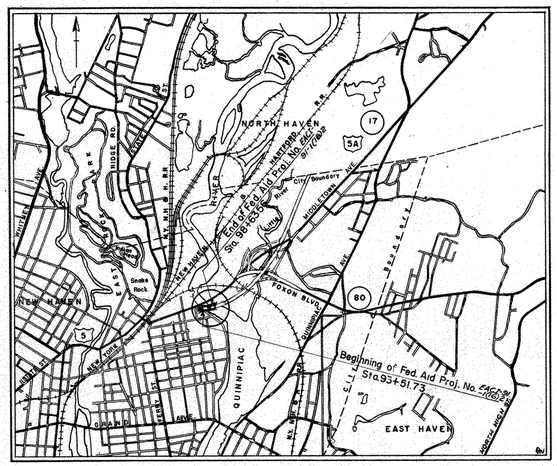

LOCATION PLAN

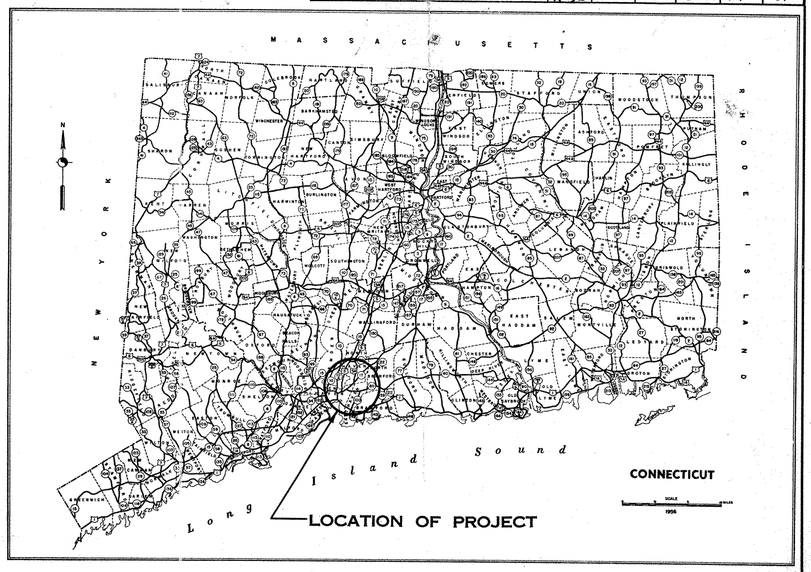

FROM STA. 93+51.73 **TO STA.** 98+63.56

LENGTH 511.83 FT.

SCALES
- PLAN 1 IN. = 40 FT.
- PROFILE HOR. 1 IN. = 40 FT. VERT. 1 IN. = 4 FT.
- CROSS SECTIONS 1 IN. = 10 FT.

FEDERAL AID PROJECT NO. EAC I-91-1(16)2

FEDERAL AID LENGTH 511.83 L.F.

TO BE MAINTAINED BY THE STATE

1955 SPECIFICATIONS, FORM NO. 808 GOVERN

TOWN NO. 92
PROJECT NO. 124

ALL ELEVATIONS ON THIS PROJECT BASED ON U.S.C. AND G.S. DATUM

FEDERAL AID INTERSTATE SYSTEM
ASSUMED DESIGN SPEED 50 M.P.H.
ANTICIPATED A.D.T. IN 1975 67,800 D.D.H.V. 4900
C.H.D. CLASSIFICATION "H" Urban (C. or I.)
1958 GEOMETRIC HIGHWAY DESIGN STANDARDS (MODIFIED)

LIST OF DRAWINGS

SHEET NO.	TITLE
1	Title Sheet
2	Index Plan & Profile
3	Detailed Estimate Sheet
4-5	Typical Cross Section Sheets
6	Alinement Data Sheet
7-11	Plans & Profiles
12-46	Bridge Sheets - Interstate Route 91 over Quinnipiac River
47-56	Cross Sections
57	Federal Aid Construction Identification Signs
A	S.N.E.T. - Relocation of Facilities

NOTE:
11/27/73
BOLTED SPLICE REPAIRS - G28 - SH 34A

LIST OF DRAWINGS STANDARD SHEETS

SHEET NO.	TITLE	B.P.R. Approval Date
221-F	Endwalls, Slope Paved Inlets & Outlets	5/7/62
221-G	Type "D", "D-G", & "L" Endwalls & Reinf. Conc. Pipe	5/7/62
222-B	Conc. Steps, Gutters, Conc. Sidewalks & Paved Ditch	5/7/62
226-A	A.C.C.M. Drop Outlet & A.C.C.M. Pipe Elbow	5/7/62
228-A	Type "C" Catch Basin, Type "C" Drop Inlet	5/7/62
228-D	Steel Frame & Grate for Type "C", "C-L" & "C-G" CB & DI	
712-B	Fences, Barways	5/7/62
714	Reinforced Concrete Marker Post (Federal Aid)	5/7/62
718	Temporary Field Office for State Highway Dept. Forces	5/7/62
712-C	Barricades	

FEDERAL AID PROJECT NO. EAC I-91-1(16)2

ROADWAY	STA.	TO STA.	LENGTH: INCLUDED IN PROJECT LENGTH FEET	LENGTH: BRIDGE SECTIONS INCLUDED IN PROJECT LENGTH FEET	LENGTH: NOT INCLUDED IN PROJECT LENGTH FEET	REMARKS	FEDERAL AID SECTIONS
Main Line	91+00	93+51.73			251.73	Grading & Drainage	Road Section II
Interstate Route 91 over Quinnipiac River - Structure	93+51.73	98+63.56		511.83		One Simple Span Composite Construction, 3 Spans Non Composite Cantilever Type with Suspended Center Portion	Bridge Section I
Main Line	98+63.56	102+50			386.44	Grading & Drainage	Road Section II
TOTALS FEDERAL AID PROJECT NO. EAC I-91-1(16)2				511.83	638.17		

DISCLAIMER CLAUSE

These plans have been prepared for the Connecticut State Highway Department by the undersigned, except that sheet identified as Sheet "A" and appended to these plans has been prepared by the utility owner identified thereon. The undersigned hereby disclaims all responsibility for the accuracy of data shown on the above mentioned sheet, except that he has reviewed it for general coordination with the plans prepared by him.

DESIGNED BY:

FIRM NAME LEONARD S. WEGMAN CO.

PER Herbert Mandelbaum

CONN. PROF. ENG. REG. NO. 3800

DATE April 24, 1962

STANDARD CONVENTIONS

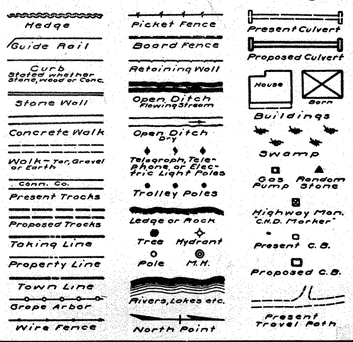

CONSTRUCTION STARTED - OCT. 22, 1962
CONSTRUCTION COMPLETED APRIL 6, 1965
PLANS REVISED BY G.A.R DATE 9-29-66

CHECKED BY W.E.S DATE SEPT. 29, 1966

PROPERTY CHECK 9-29-66

DEPARTMENT OF COMMERCE
BUREAU OF PUBLIC ROADS

APPROVED:

DIVISION ENGINEER DATE

SUBMITTED June 15 1962
Maxwell Kramer
ENGINEER OF DESIGN (CONSULTING ENGRS)

APPROVAL RECOMMENDED June 15 1962
CHIEF OF DESIGN

APPROVED June 18 1962
David S. Yalmum
DIRECTOR OF PLANNING AND DESIGN

"ARWHIGHT" TRACING CLOTH JOSEPH MERRITT & CO. 60442

124

M 258 01

FORM NO. ENG. 10 ED. 8-55

PUB. ROAD DIV. NO.	STATE	TOWN	FED. AID PROJ. NO.	PROJ. NO.	YEAR	ROUTE NO.	SHEET NO.	TOTAL SHEETS
1	CONN.	NEW HAVEN	EACI-91-1(16)2	92-124	1962	I-91	2	57

INDEX PLAN & PROFILE

PLAN SCALE 1" = 200'
PROFILE SCALE HOR. 1" = 200'
VERT. 1" = 20'

INTERSTATE ROUTE 91

GRAPHIC SCALE 1" = 200' (400' 0 400')

NOTE:
Work in this contract includes the complete construction of the structure for Interstate Route 91 over the Quinnipiac River, fencing, riprap, all grading, including removal of unsuitable material, all drainage, including paved ditches, barricades and North Front Street curb and sidewalk.

TRAFFIC DATA LEGEND:
00000 1975 Average daily traffic.
(00000) 1975 Directional design-hour volume

Legend
◎ – Federal-Aid Construction Identification Signs (Series 10A)

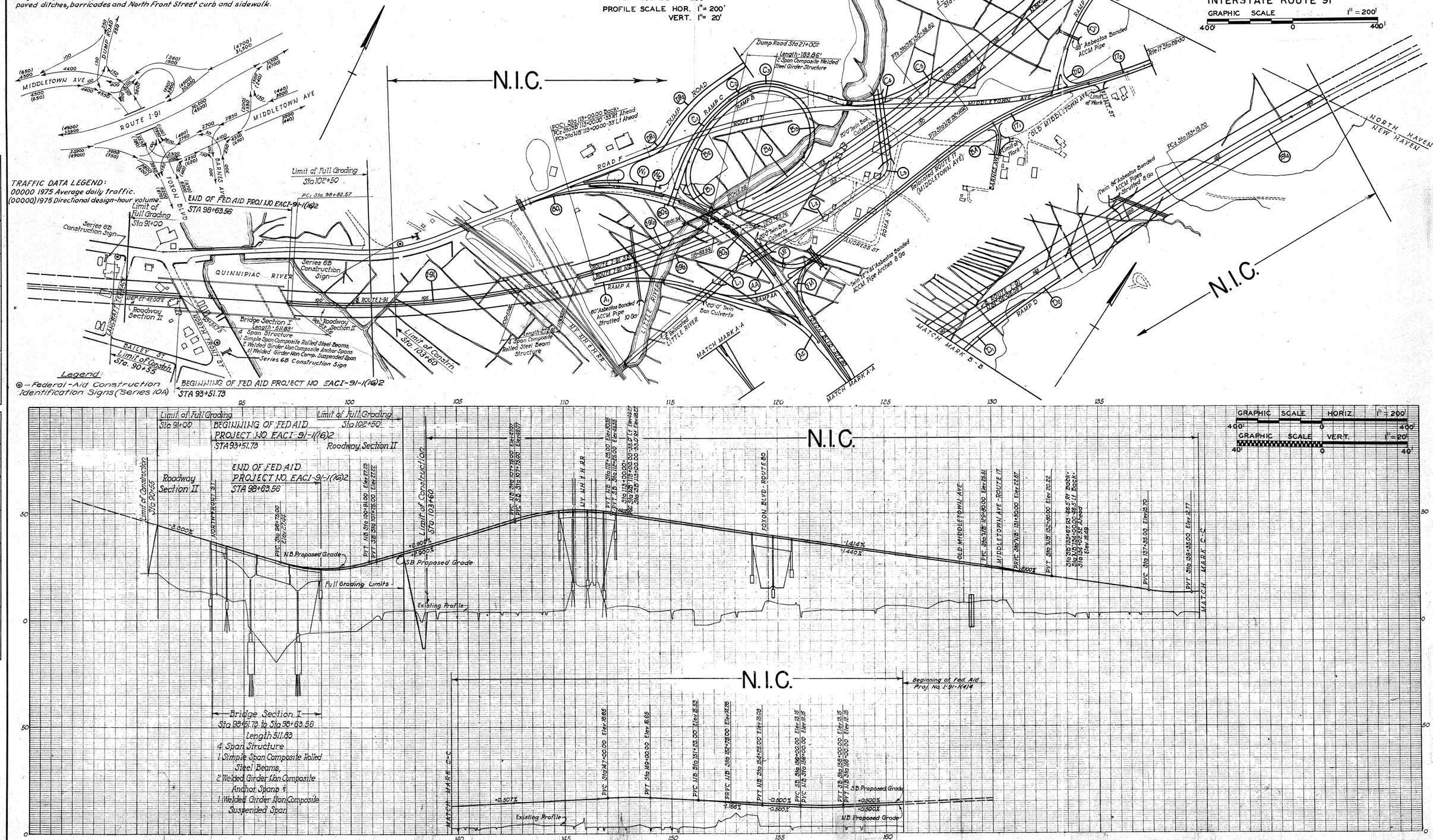

PLAN	BY	DATE	CHECKED BY	DATE
Surveyed	N.E.A.	1960, 1961	N.E.A.	1960, 1961
Plotted	"	"	"	"
Traced	L.S.W. Co.	Oct. 1960	L.S.W. Co.	Oct. 1960
Designed	"	"	"	"
New Const. Noted	"	1960-1962	"	1960-1962
Top. Field Clk. Noted	N.E.A.	"	N.E.A.	"
NOTE BOOK				
NO.				

PROFILE	BY	DATE	CHECKED BY	DATE
Surveyed	N.E.A.	1960, 1961	N.E.A.	1960, 1961
Plotted	"	"	"	"
Grades Plotted	L.S.W. Co.	Oct. 1960	L.S.W. Co.	Oct. 1960
Traced	"	"	"	"
New Const. Noted	"	1960-1962	"	1960-1962
Designed	N.E.A.	"	N.E.A.	"
NOTE BOOK				
NO.				

THIS SHEET NOT CORRECTED

"ARMWRIGHT" TRACING CLOTH JOSEPH MERRITT & CO. 18907

92 124

M 258 01

2

Index Plan & Profile

FORM NO. ENG. 11 ED 9-59

PUB. ROAD DIV. NO.	STATE	TOWN	FED. AID PROJ. NO.	PROJ. NO.	YEAR	ROUTE NO.	SHEET NO.	TOTAL SHEETS
1	CONN.	NEW HAVEN	EACI-91-1(162)	92-124	1962	I-91	3	57

DETAILED ESTIMATE SHEET

FOR THE CONSTRUCTION OF INTERSTATE ROUTE 91 BRIDGE OVER QUINNIPIAC RIVER IN THE TOWN OF NEW HAVEN

FROM STA. 93+51.73 TO STA. 98+63.56 LENGTH 511.83 FEET; BASE COURSE _____ WIDTH ____ FEET; DEPTH ____ INCHES; SURFACE COURSE _____ WIDTH ____ FEET; DEPTH ____ INCHES

EXCAVATION AND BORROW

STA. TO STA.	Earth Excavation C.Y.	Fill C.Y.		Borrow C.Y.
90+55 - 98+51.73	2 488	44 764		
98+63.56-100+00	16	37 847		
100+00-103+60	302	54 937		
Totals from Sections	2 806	137 548		
Less Pervious Mat'l		- 5500		
Unsuit. Mat'l in Fill Areas	65 393	65 393		
Misc.	6 820	19 359		
TOTALS	75 019	216 800		
Less Unsuit. Mat'l	-71 932			
Less Shrinkage	- 309			
Avail. for Fill	2 778	2 778		
Net Borrow		214 022		
Plus Shrinkage		21 402		
Total Borrow				235 424
TOTALS	75 019			235 424

DRAINAGE

STA. TO STA.	15" Reinforced Concrete Pipe L.F.	A.C.C.M. Pipe 6" L.F.	A.C.C.M. Pipe 18" L.F.	ACCM Pipe Elbows 6" L.F.	ACCM Pipe Elbows 18" L.F.		Type "C" Catch Basin Ea.	Class "A" Concrete C.Y.	Paved Ditch S.Y.		Ditch Excavation C.Y.	Trench Excavation 0'-6' Deep C.Y.	Trench Excavation 0'-10' Deep C.Y.
FEDERAL													
93+15 Rt	72						1					45	
92+75 Rt	6						1					2	18
92+75 Lt	72						1					46	
92+35 Lt			58		6		1					44	
92+35 For Lt		80										35	
99+40 Rt	48						1					30	
98+90 Rt	72						1					43	
99+00 Lt			32		6		1	1.83	7		6	18	34
101+50 Rt	72						1					39	
101+50 Lt			40		6		1	1.83	5		6	51	
UNASSIGNED	12	2	2	6	0		0	.34	1		2	7	3
TOTALS	356	82	132	6	18		9	4	13		14	360	55

MISCELLANEOUS

STA. TO STA.	Maintenance and Protection of Traffic L.S.	Trafficmen Hr.	Calcium Chloride for Dust Control Ton	Water for Dust Control M. Gal.	5" Granite Stone Curbing L.F.	Concrete Sidewalk S.F.	Riprap Ton	Concrete Marker Post Ea.	Permanent Barricade L.F.	6' Chain Link Fence L.F.
PARTICIPATING										
Main Line										
91+00 102+50	L.S.	480	5	65			710		26	500
93+51.73								1		
98+63.56								1		
North Front Street		290				2 800				288
UNASSIGNED		20	1	5						
TOTALS	L.S.	500	6	70	290	2 800	710	2	26	788

BRIDGE QUANTITIES

	Structure Excavation (Complete) C.Y.	Struc. Excavation (Excl. Cofferdam & Pumping) C.Y.	6" Perforated A.C.C.M. Pipe L.F.	6" Cast Iron Pipe for Bridge Drainage L.F.	Test Pile (Cast-in-Place Concrete Pile Type 1 60' Length) Each	Test Pile (Cast-in-Place Concrete Pile Type 1 75' Length) Each	Test Pile (Cast-in-Place Concrete Pile Type 1 100' Length) Each	Test Pile (Cast-in-Place Concrete Pile Type 2 75' Length) Each	Test Pile (Cast-in-Place Concrete Pile Type 2 90' Length) Each	Pile loading Test for Piles - Types 1 Each	6" A.C.C.M. Pipe Elbow L.F.	Cast-in-Place Concrete Piles Type 1 L.F.	Cast-in-Place Concrete Piles Type 2 L.F.	Splicing Cast-in-Place Concrete Piles Type 1 Each	Splicing Cast-in-Place Concrete Piles Type 2 Each	Steel Sheet Piles Lb.	Timber Sheet Piles M.B.F.	Cofferdam and Pumping L.F.	Class "A" Concrete C.Y.	Class "C" Concrete C.Y.	Underwater Concrete C.Y.	1½" Prefor. Expans. Joint Filler for Bridges S.F.	1" Prefor. Expans. Joint Filler for Bridges S.F.	1½" Prefor Expans. Joint Filler for Bridges S.F.	Neoprene Plate for Bridge Expansion Joint L.F.	Dimension Stone Masonry C.Y.	Deformed Steel Bars Lb.	Structural Steel Lb.	Dampproofing S.Y.	Metal Bridge Rail L.F.	Metal Beam Type Rail (Bridge) L.F.	Pervious Structure Backfill C.Y.	Shear Connectors L.F.	6"x9½" Granite Stone Curbing for Bridges L.F.	Riprap Ton	GRAVEL FILL C.Y.	Bridge Scupper Each	2" Rigid Steel Conduit in Structure (18'x18'x10') L.F.	Cast Iron Junction Box Each	Removal of Pile-Driving Obstructions C.Y.	24" Cored Holes for Piles L.F.	Pile Loading Test for Piles-Type 2 Each
FEDERAL AID PARTICIPATING																																												
INTERSTATE ROUTE 91 BRIDGE OVER QUINNIPIAC RIVER	1,300	4,870	154	105	1	1	1	1	1	3	12	17,700	16,400	15	12	1,040,000	1.72	890	3,384	2,250	2,290	1,180	6	21	330	336	823,000	3,950,000	878	1,126	512	5,500	1,140	1,170	3,540	350	11	1,250	9	5	100	2
TOTALS	1,300	4870	154	105	1	1	1	1	1	3	12	17,700	16,400	15	12	1,040,000	1.72	890	3,384	2,250	2,290	1,180	6	21	330	336	823,000	3,950,000	878	1,126	512	5,500	1,140	1,170	3,540	350	11	1,250	9	5	100	2

THIS SHEET NOT CORRECTED

PLAN NOTE BOOK NO. ____

Surveyed ____ Plotted ____ Traced ____ Designed ____ New Const. Noted ____ Top. Field Chk. noted ____

BY	DATE	CHECKED BY	DATE
L.S.W. Co.	1962	L.S.W. Co.	1962

DIETZGEN 131 Arkwright Tracing Cloth 6762

92 124

M 253 01

TYPICAL CROSS SECTIONS

NOT TO SCALE

PUB. ROAD DIV. NO.	STATE	TOWN	FED. AID PROJ. NO.	PROJ. NO.	YEAR	ROUTE NO.	SHEET NO.	TOTAL SHEETS
1	CONN.	NEW HAVEN	FACI-91-1(16)2	92-124	1962	I-91	4	57

INTERSTATE ROUTE 91

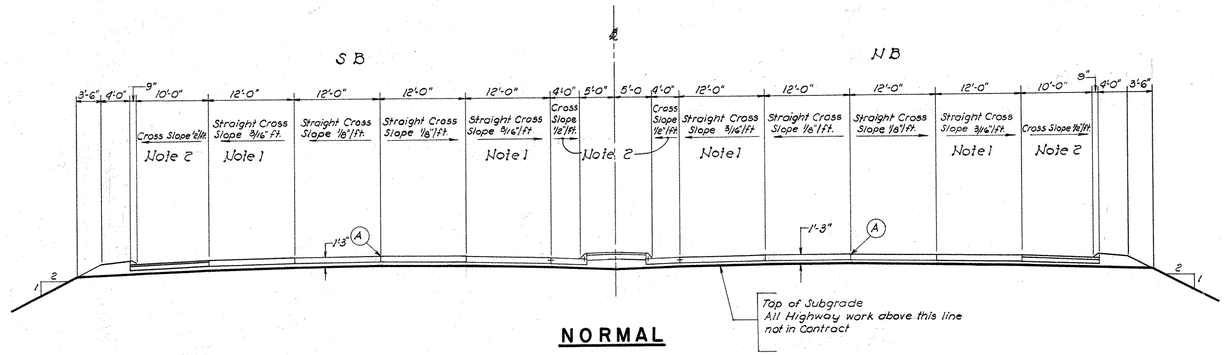

NORMAL

Sta 91+00 to Sta 96+75

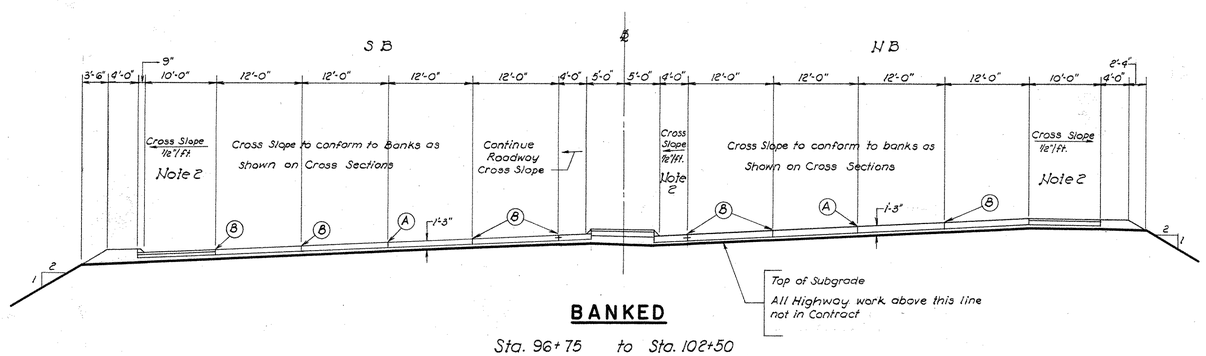

BANKED

Sta. 96+75 to Sta. 102+50

LEGEND

A Point of Application of grade

B Point of Application of bank

NOTES:

1- Slope transitions to 1/8"/ft before Quinnipiac River Bridge - see Cross Sections

2- Continue roadway cross slope within limits of Quinnipiac River Bridge

3- Shoulder cross slope to transition within 50' either side of Quinnipiac River Bridge

NOT CORRECTED – NO CHANGE

PLAN			
Surveyed			
Plotted			
Traced			
Designed	L.S.W.Co.	1962	L.S.W.Co.	1962
New Const. Noted			
Top Field Chk. noted			
NOTE BOOK			
NO.			

TYPICAL SECTIONS

THE INFORMATION, INCLUDING ESTIMATED QUANTITIES OF WORK, SHOWN ON THESE SHEETS IS BASED ON LIMITED INVESTIGATIONS BY THE STATE AND IS IN NO WAY WARRANTED TO INDICATE THE TRUE CONDITIONS TO BE ENCOUNTERED OR QUANTITIES OF WORK WHICH WILL BE DISCLOSED

TYPICAL CROSS SECTIONS

NOT TO SCALE

PUB. ROAD DIV. NO.	STATE	TOWN	FED. AID PROJ. NO.	PROJ. NO.	YEAR	ROUTE NO.	SHEET NO.	TOTAL SHEETS
1	CONN.	NEW HAVEN	EACI-91-1(6)2	92-124	1962	I-91	5	57

INTERSTATE ROUTE 91

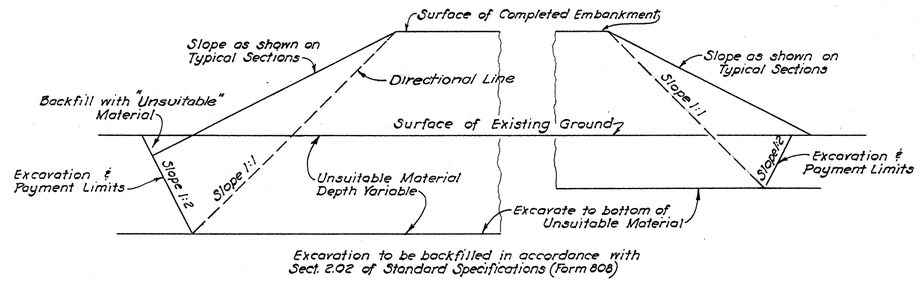

EXCAVATION LIMITS FOR UNSUITABLE MATERIAL

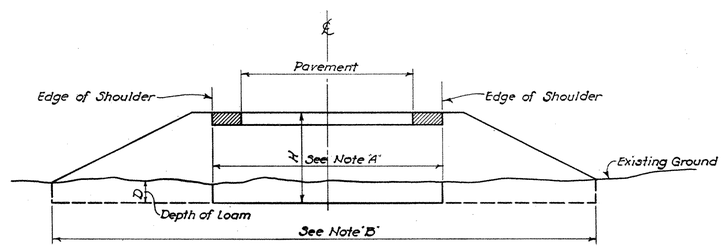

TYPICAL METHOD OF STRIPPING LOAM UNDER FILLS

Note "A"
For stability of embankment, loam to be excavated within these minimum limits at all grade points and where "H" is 3 feet or less.

Note "B"
In order to obtain required loam for placement on proposed slopes, medians, etc, loam within these limits is to be excavated in so far as it is available under fills regardless of "H."

No loam removed as stated above shall be used in the construction of embankment without permission of the Engineer; and if such permission is granted no loam shall be placed within 3 feet of the finished grade.

NOT CORRECTED – NO CHANGE

ABBREVIATIONS

SC	5" Granite Stone Curbing
CB	Catch Basin
EW	End Wall
NIC	Not in Contract
SL	Slope
CI	Cast Iron
DDHV	Directional Design Hourly Volume
ADT	Average Daily Traffic
EF	Each Face
PAG	Point of Application of Grade

PLAN	BY	DATE	CHECKED BY	DATE
Surveyed				
Plotted				
Traced	L.S.W. Co.	1960/1962	L.S.W. Co.	1960/1962
Designed				
New Const. Noted				
Top. Field Chk. noted				
NOTE BOOK NO.				

Typical Sections

PUB. ROAD DIV. NO.	STATE	TOWN	FED. AID PROJ. NO.	PROJ. NO.	YEAR	ROUTE NO.	SHEET NO.	TOTAL SHEETS
1	CONN.	NEW HAVEN	ACI-91-1(162)	92-124	1962	I-91	6	51

INTERSTATE ROUTE 91

LOCATION	CURVE NO.	POINT	COORDINATES N / E	STATION & OFFSET	BEARING	DISTANCE OR LENGTH OF CURVE	CURVE DATA (Dc, Δ, R, T)	REMARKS
℄ I-91		POL	177,319.295 / 560,998.280	91+00.00 ℄	N67°27'42.0"E	782.57	1°19'58.80" / 18°53'39.50" / 4,298.26 / 715.21	
	(I-91)	PC_1	177,619.256 / 561,721.081	98+82.57 ℄				
		PI_1	177,893.398 / 562,381.667			1417.43		
		POC_1	178,366.683 / 562,917.885	113+00.00 ℄ Back				
℄ I-91 SB		PC_2	178,391.418 / 562,896.041	113+00.00 ℄ Ahead = 113+00.00 Back - 33' Lt.	N24°05'05.05"E N40°34'02.50"E		1°23'22.35" / 24°28'51.42" / 4,115.12 / 892.83	
	(I-91)	PI_2	178,982.237 / 563,565.424			1758.40		
		PT_2	179,797.336 / 563,929.774	130+58.40 ℄				
		POL	180,079.918 / 564,056.089	133+67.93 ℄ Back = 134+02.32 ℄ Ahd. 46.51' Lt.				
℄ I-91 NB		PC_3	178,341.935 / 562,939.716	113+00.00 ℄ Ahead = 113+00.00 Back - 33' Rt.			1°16'42.68" / 24°28'51.42" / 4,481.41 / 972.30	
	(I-91)	PI_3	178,985.342 / 563,668.680			1314.92		
		PT_3	179,872.994 / 564,065.462	132+14.92 ℄	N24°05'05.05"E			
		POL	180,041.966 / 564,140.993	134+00.00 ℄ Back = 134+02.32 ℄ Ahd. 46.51' Rt.				
℄ I-91		POL	180,060.942 / 564,098.541	134+02.32 ℄	N24°05'05.1"E	1912.88		
	(I-91)	PC_4	181,807.281 / 564,879.163	153+15.20 ℄			0°30'00" / 6°30'25.83" / 11,459.16 / 651.42	
		PI_4	182,402.000 / 565,144.999			764.18		
		POC_4	182,494.033 / 565,214.038	160+79.38 ℄	N30°35'30.93"E			
		PT_4	182,962.750 / 565,476.520	166+16.64 ℄		537.26		
Survey ℄ Rte. I-91		POL	177,319.295 / 560,998.280	91+00.00 ℄	N67°27'42.00"E	972.90		
	(I-91)	PC_5	177,692.207 / 561,896.868	100+72.89 ℄			1°30'00" / 43°22'36.92" / 3819.72' / 1519.16'	
		PI_5	178,274.503 / 563,300.000			2891.80		
		PT_5	179,661.409 / 563,919.350	129+64.69 ℄	N24°05'05.05"E			

LOCATION	CURVE NO.	POINT	COORDINATES N / E	STATION & OFFSET	BEARING	DISTANCE OR LENGTH OF CURVE	CURVE DATA (Dc, Δ, R, T)	REMARKS
℄ RAMP "A"		PC_{A1}	178,325.441 / 562,954.274	10+00.00 ℄ = I-91 NB 13+00.00 Ah. 22' Rt.	N40°34'43"E		7° 02' 20" / 31° 34' 08" / 814.00 / 230.10	
	(A1)	PI_{A1}	178,477.707 / 563,126.788			448.50		
		PT_{A1}	178,517.124 / 563,353.488	14+48.50 ℄	N80°08'11"E	391.87		
		PC_{A2}	178,584.253 / 563,739.562	18+40.37 ℄			13° 50' 22" / 38° 03' 19" / 414.00 / 142.78	
	(A2)	PI_{A2}	178,608.711 / 563,880.226			274.97		
		PT_{A2}	178,541.262 / 564,006.065	21+15.34 ℄ = Rte. 80 Sta. 264+34.44 - 18' Rt.	S61°48'30"E			
℄ RAMP "B"		PC_{B1}	178,868.593 / 563,265.962	10+00.00 ℄ = Rte. 80 Sta. 184+50.00 - 19' Lt.	N87°52'45"W		31° 08' 20" / 81° 14' 00" / 184.00 / 157.80	
	(B1)	PI_{B1}	178,874.432 / 563,108.270			260.87		
		PCC_{B12}	179,031.172 / 563,090.007	12+60.87 ℄	N6°38'45"W			
		PCC_{B12}	do / do	12+60.87 ℄			9° 32' 57" / 43° 03' 45" / 600.00 / 236.73	
	(B2)	PI_2	179,266.307 / 563,062.610			450.95		
		PCC_{B23}	179,456.804 / 563,203.144	17+11.82 ℄	N36°25'00"E			
		PCC_{B23}	do / do	17+11.82 ℄			26° 46' 25" / 164° 50' 17" / 214.00 / 1,607.93	
	(B3)	PI_3	180,750.740 / 564,157.697			615.68		
		PCC_{B34}	179,252.183 / 563,574.798	23+27.50 ℄	N21°05'17"W			
		PCC_{B34}	do / do	23+27.50 ℄			5° 43' 46" / 15° 45' 23" / 1,000.00 / 138.37	
	(B4)	PI_4	179,123.222 / 563,524.635			275.00		
		PT_{B4}	179,012.729 / 563,441.338	26+02.50 ℄ = I-91 "SB" 121+30.00 - 22' Lt.	S37°00'40"W			
℄ RAMP "BB"		POL_{BB}	178,810.219 / 563,115.751	Rte. 80 Const. ℄ Sta. 16+96.79 = 10+38.42 ℄	N6°38'45"W	222.45	Tangent	
		PCC_{B1}	179,031.172 / 563,090.007	12+60.87 ℄ = Ramp "B" ℄ Sta. 12+60.87				

LOCATION	CURVE NO.	POINT	COORDINATES N / E	STATION & OFFSET	BEARING	DISTANCE OR LENGTH OF CURVE	CURVE DATA (Dc, Δ, R, T)	REMARKS
℄ RAMP "C"		POL_C	178,807.125 / 563,091.949	13+55.60 ℄ = Rte. 80 Const. ℄ 16+72.79	N16°38'46"W	176.48		
	(C1)	PC_1	178,982.422 / 563,071.525	15+32.08 ℄			8° 15' 43" / 33° 39' 46" / 693.49' / 209.79'	
		PI_1	179,190.805 / 563,047.244			407.44		
		PCC_{12}	179,377.103 / 563,142.542	19+39.52 ℄ = "B" 16+13.39 - 10' Lt.				
		PCC_{12}	do / do	do / do			9° 23' 34" / 9° 24' 00" / 610.00 / 50.15	
	(C2)	PI_2	179,422.382 / 563,165.323		N27°01'00"E	100.08		
		PCC_{23}	179,462.740 / 563,195.096	20+39.60 ℄ = "B" 17+11.82 - 10' Lt.				
		PCC_{23}	do / do	20+39.60 ℄			25° 34' 43" / 44° 36' 14" / 224.00 / 91.88	
	(C3)	PI_3	179,536.675 / 563,249.640		N36°25'00"E	174.38		
		PT_3	179,551.016 / 563,340.391	22+13.98 ℄ = "B" 18+78.42 - 10' Lt.				
		PC_4	179,590.200 / 563,588.352	24+65.01 ℄	N81°01'14"E	251.03		
	(C4)	PI_4	179,611.235 / 563,721.471			259.99	14° 19' 26" / 37° 14' 25" / 400.00 / 134.77	
		PCC_{45}	179,708.539 / 563,814.719	27+25.00 ℄	N43°46'49"E			
		PCC_{45}	do / do	27+25.00 ℄			7° 09' 43" / 19° 41' 44" / 800.00 / 138.87	
	(C5)	PI_{45}	179,808.803 / 563,910.803			275.00		
		PT_5	179,935.585 / 563,967.475	30+00.00 ℄ = I-91 "SB" 132+00.00 - 22' Lt.	N24°05'05"E			
℄ RAMP "D"		POT	180,055.162 / 564,474.484	9+15.02 ℄ = Rte. 17 Sta. 25+43.92 ℄	N7°13'53"W	228.48		
	(D1)	PC_{D1}	180,281.824 / 564,445.724	11+43.50 ℄			5° 43' 46" / 26° 38' 35" / 1000.00 / 236.79	
		PI_{D1}	180,516.726 / 564,415.918			465.01		
		PCC_{D12}	180,740.052 / 564,494.615	16+08.51 ℄	N19°24'42"E			
		PCC_{D12}	do / do	16+08.51 ℄			1° 11' 37" / 4° 40' 23" / 4,800.00 / 195.85	
	(D2)	PI_{D2}	180,924.772 / 564,559.708			391.49		
		PT_{D2}	181,103.576 / 564,639.634	20+00.00 ℄ = I-91 Sta. 145+75.00 ℄	N24°05'05"E			

NO CHANGES

Alinement Data

PUB. ROAD DIV. NO.	STATE	TOWN	FED. AID PROJ. NO.	PROJ. NO.	YEAR	ROUTE NO.	SHEET NO.	TOTAL SHEETS
1	CONN.	NEW HAVEN	EACI-91-1(19)2	92-124	1962	I-91	7	57

GENERAL CONSTRUCTION NOTES

Remove existing drainage culverts where and as directed.

All proposed drainage may be varied by the Engineer to fit conditions found in the field.

All buildings within the limits of the R.O.W. to be removed under separate contract.

Where buildings have been removed to clear the way for construction or where old foundations and cellars or other holes exist, the removal as directed of the cellar walls and other concrete or masonry to three feet below the directed finished grade and the filling of the cellar or other holes will be paid for as per Section 2.02 of the Standard Specifications and Special Provisions.

All present pavement which is to be discontinued as pavement is to be removed as directed and the area neatly graded. Payment as per Section 2.02 of the Standard Specifications.

Paved ditches to be of 2" Hot Asphalt Concrete on 4" Rolled Gravel Base.

Work in this contract includes the complete construction of the structure for Interstate Route 91 over the Quinnipiac River, riprap, all grading including removal of unsuitable material, all drainage including paved ditches, barricades and North Front Street curb and sidewalk.

Remove loam within roadbed limits at grade points and to an elevation 3 feet below finished pavement grade and elsewhere as directed. No loam removed as stated above shall be used in the construction of embankment without permission of the Engineer, and if such permission is granted no loam shall be placed within 3 feet of the finished grade.

GRAPHIC SCALE 1" = 40'

80' 0 80'

B.M. No 91-25 Elev 34.230
Town Mon #171 on the N.E. Corner of Middletown and Clinton Avenue

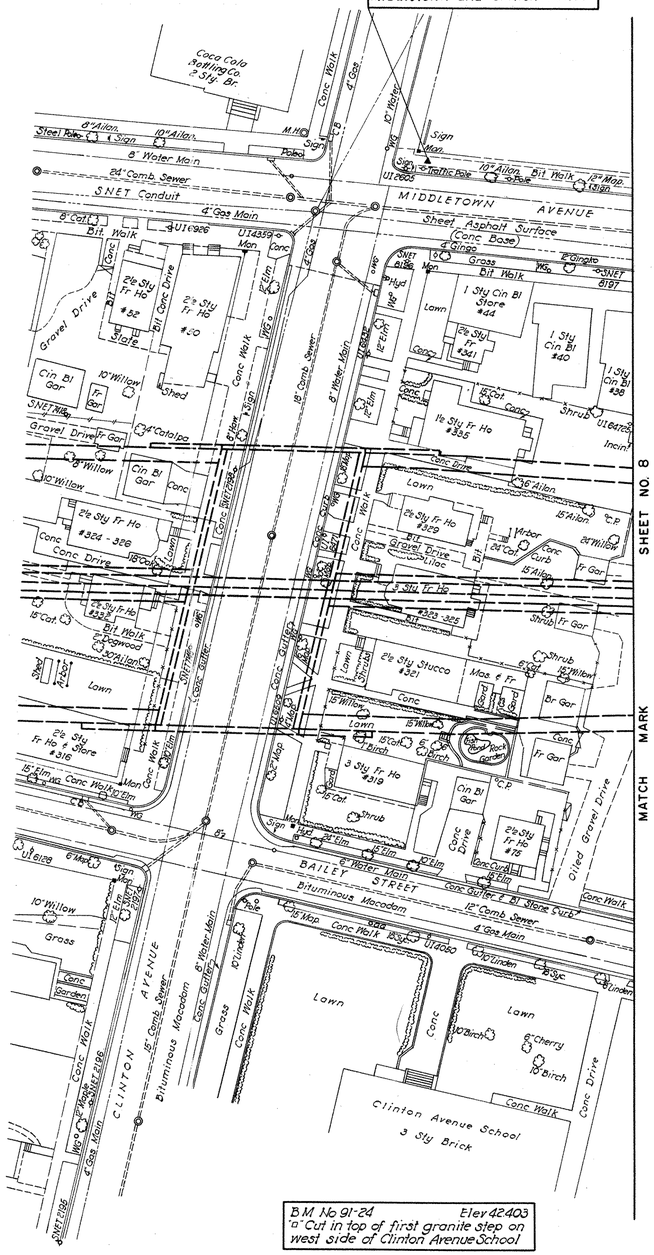

B.M. No 91-24 Elev 42.403
"a" Cut in top of first granite step on west side of Clinton Avenue School

SHEET NO. 8

MATCH MARK

NO REVISIONS

PLAN	BY	DATE	CHECKED BY	DATE
Surveyed	N.E.A.	1960, 1961	N.E.A.	1960, 1961
Plotted				
Traced	L.S.W.Co.	1960-1962	L.S.W.Co.	1960-1962
Designed				
New Const. Noted				
Top. Field Chk. noted	N.E.A.	1960-1961	N.E.A.	1960-1961
NOTE BOOK NO.				

PLAN - Rte 1-91 Sta 85+30 to Rte 1-91 Sta 88+79
GENERAL CONSTRUCTION NOTES

FORM NO. ENG. 11 ED 8-54

PUB. ROAD DIV. NO.	STATE	TOWN	FED. AID PROJ. NO.	PROJ. NO.	YEAR	ROUTE NO.	SHEET NO.	TOTAL SHEETS
1	CONN.	NEW HAVEN	EACI-91-1(16)2	92-124	1962	I-91	8	57

INTERSTATE ROUTE 91

MINIMUM WIDTH OF R.O.W = 274'

Note:
Work in this contract includes the complete construction of the structure for Interstate Route 91 over the Quinnipiac River, fencing, riprap, all grading including removal of unsuitable material, all drainage including paved ditches, barricades and North Front Street curb and sidewalk.

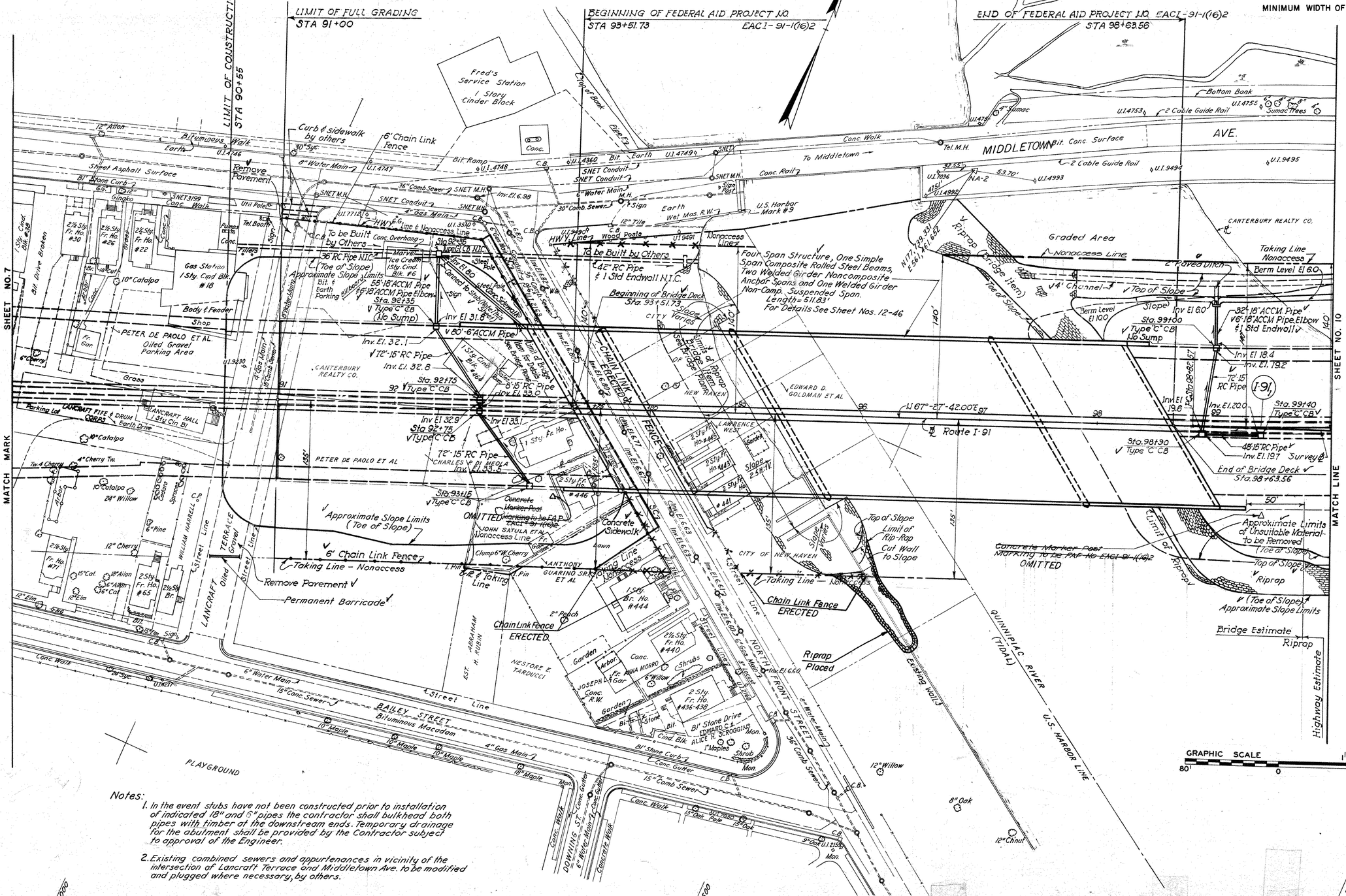

Notes:

1. In the event stubs have not been constructed prior to installation of indicated 18" and 6" pipes the contractor shall bulkhead both pipes with timber at the downstream ends. Temporary drainage for the abutment shall be provided by the Contractor subject to approval of the Engineer.

2. Existing combined sewers and appurtenances in vicinity of the intersection of Lancraft Terrace and Middletown Ave. to be modified and plugged where necessary, by others.

PLAN	BY	DATE	CHECKED BY	DATE
Surveyed	N.E.A.	1960, 1961	N.E.A.	1960, 1961
Plotted	"	"	"	"
Traced	L.S.W. Co.	Oct. 1960	L.S.W. Co.	Oct. 1960
Designed	"	"	"	"
New Const. Noted	"	1960, 1962	"	1960, 1962
Top Field Chk. noted	N.E.A.	1960, 1961	N.E.A.	1960, 1961

NOTE BOOK

NO.

PLAN - Rte I-91, Sta 88+78 to Rte I-91 Sta 100+00

"ARWRIGHT" TRACING CLOTH JOSEPH MERRITT & CO. 14551

92 124

M 253 01

8

FORM NO. ENG. 12 ED. 3-56

PUB. ROAD DIV. NO.	STATE	TOWN	FED. AID PROJ. NO.	PROJ. NO.	YEAR	ROUTE NO.	SHEET NO.	TOTAL SHEETS
1	CONN.	NEW HAVEN	EACI-91-1(16)2	92-124	1962	I-91	9	57

INTERSTATE ROUTE 91

GRAPHIC SCALE HORIZ. 1" = 40'
80' 0 80'
GRAPHIC SCALE VERT. 1" = 4'
8' 8'
I-91 SB & NB

Note:
Work in this contract includes the complete construction of the structure for Interstate Route 91 over the Quinnipiac River, fencing, riprap, all grading including removal of unsuitable material, all drainage including paved ditches, barricades and North Front Street curb and sidewalk.

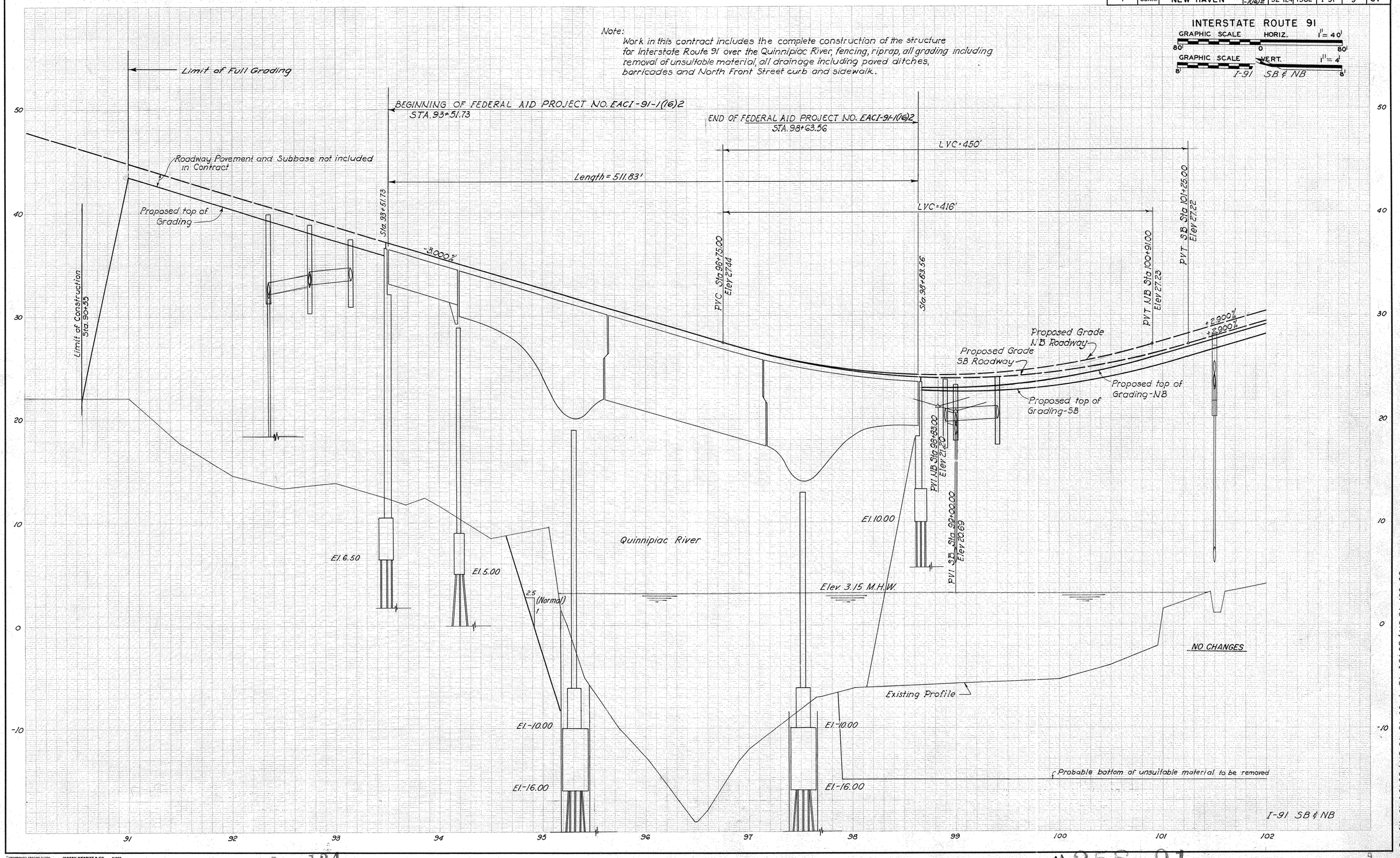

PROFILE		BY	DATE	CHECKED BY	DATE
	Surveyed	N.E.A.	1960, 1961	N.E.A.	1960, 1961
	Plotted	"	"	"	"
	Traced	L.S.W. Co.	Oct. 1960	L.S.W. Co.	Oct. 1960
NOTE BOOK	Designed	"	"	"	"
	New Const. Noted	"	1960, 1961	"	1960, 1961
NO.	Top Field Chk. noted	N.E.A.	"	N.E.A.	"

Profile Rte I-91 SB & NB Sta 91+00 to Rte I-91 SB & NB Sta 102+00

"ARKWRIGHT" TRACING CLOTH JOSEPH MERRITT & CO. 64972

92 124

M 258 01

9

FORM NO. ENG. 11 ED 8-54

PUB. ROAD DIV. NO.	STATE	TOWN	FED. AID PROJ. NO.	PROJ. NO.	YEAR	ROUTE NO.	SHEET NO.	TOTAL SHEETS
1	CONN.	NEW HAVEN	EACI-91-1(16)2	92-124	1962	I-91	10	57

INTERSTATE ROUTE 91

MINIMUM WIDTH OF R.O.W. = 325'

Note:
Work in this contract includes the complete construction of the structure for Interstate Route 91 over the Quinnipiac River, fencing, riprap, all grading including removal of unsuitable material, all drainage including paved ditches, barricades and North Front Street curb and sidewalk.

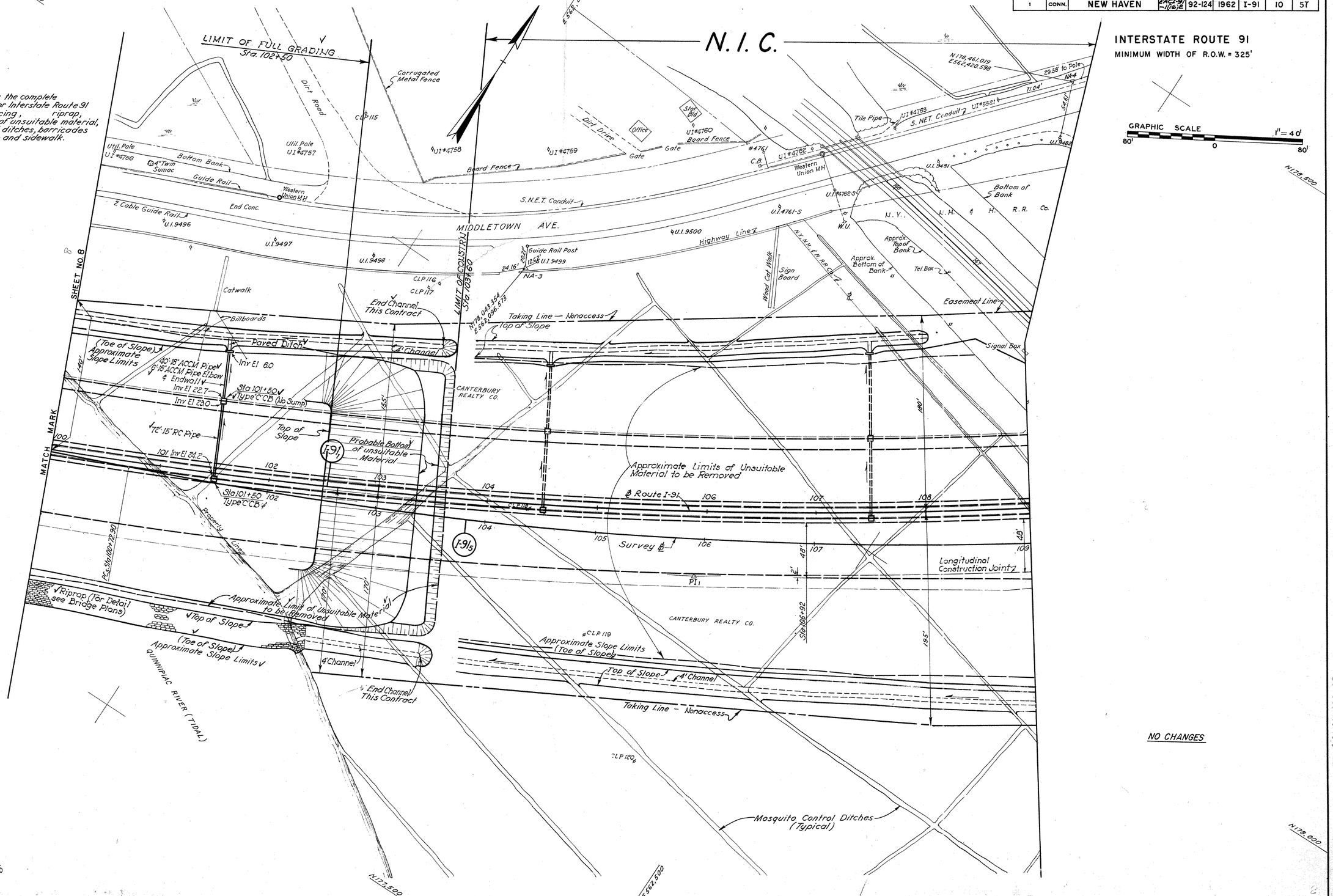

GRAPHIC SCALE 1" = 40'

NO CHANGES

PLAN		BY	DATE	CHECKED BY	DATE
NOTE BOOK	Surveyed	N.E.A.	1960, 1961	N.E.A.	1960, 1961
	Plotted	"	"	"	"
	Traced	L.S.W. Co.	Oct. 1960	L.S.W. Co.	Oct. 1960
	Designed	"	"	"	"
NO.	New Const. Noted	"	1960, 1961	"	1960, 1961
	Top Field Chk. noted	N.E.A.	"	N.E.A.	"

Plan Rte I-91 Sta. 100+00 to Rte I-91 Sta 108+95

"ARKWRIGHT" TRACING CLOTH JOSEPH MERRITT & CO. 16291

92 124

M 258 01

10

FORM NO. ENG. 12 ED. 3-56

PUB. ROAD DIV. NO.	STATE	TOWN	FED. AID PROJ. NO.	PROJ. NO.	YEAR	ROUTE NO.	SHEET NO.	TOTAL SHEETS
1	CONN.	NEW HAVEN	FACI-91-1(16)2	92-124	1962	I-91	11	57

PROFILE	BY	DATE	CHECKED BY	DATE
Surveyed	N.E.A.	1960, 1961	N.E.A.	1960, 1961
Plotted	"	"	"	"
Traced	L.S.W. Co.	Oct. 1960	L.S.W. Co.	Oct. 1960
Designed	"	"	"	"
New Const. Noted	"	1960, 1962	"	1960, 1962
Top Field Chk. noted	N.E.A.	1960, 1961	N.E.A.	1960, 1962

NOTE BOOK NO.

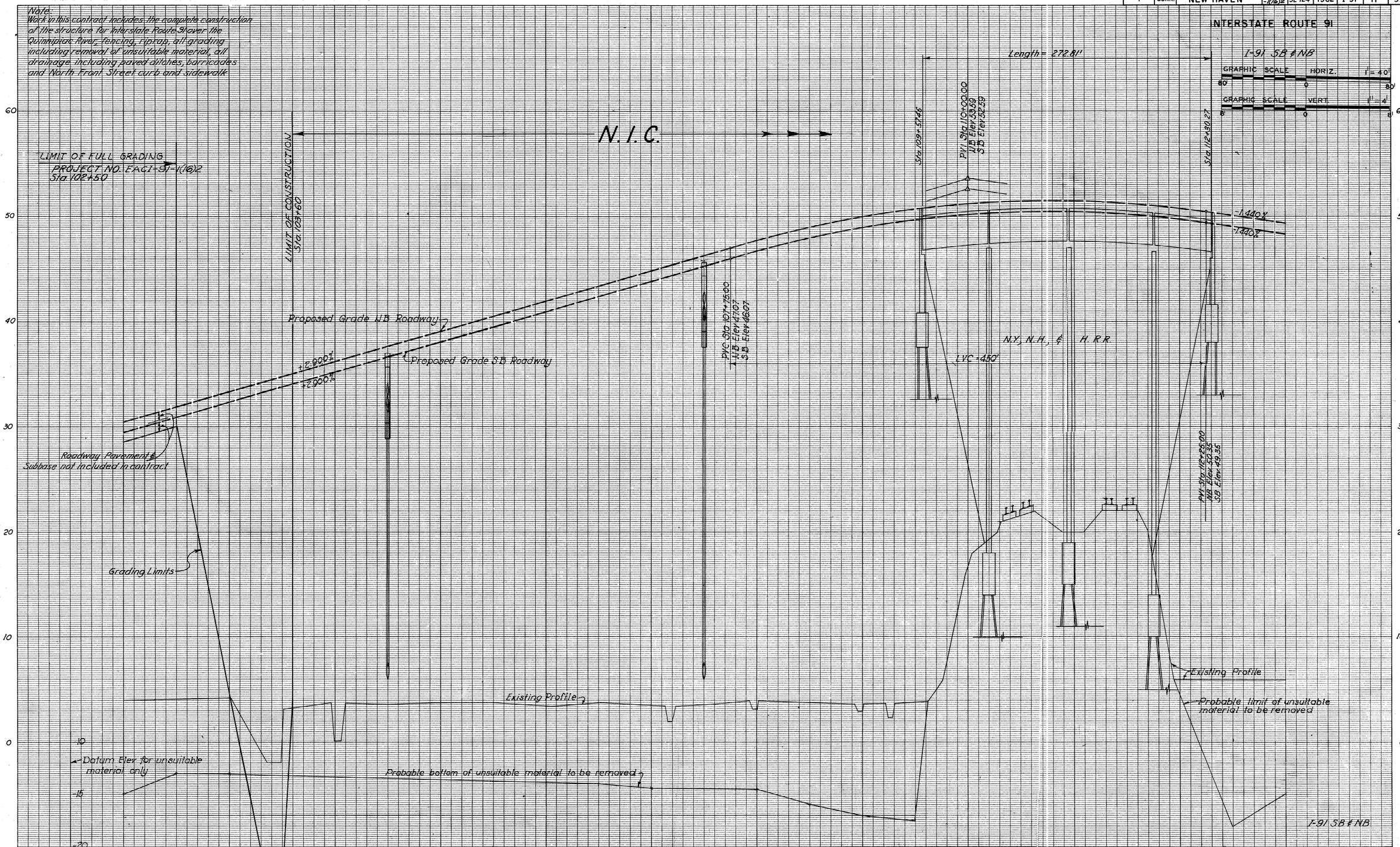

Profile Rte I-91 SB & NB Sta 102+00 to Rte I-91 SB & NB Sta 113+00

"ARKWRIGHT" TRACING CLOTH JOSEPH MERRITT & CO. 64872

92 124

M 253 01

11

FORM NO. ENG. 15 ED. 11-52

PUB. ROAD DIV. NO.	STATE	TOWN	FED. AID PROJ. NO.	PROJ. NO.	YEAR	ROUTE NO.	SHEET NO.	TOTAL SHEETS
1	CONN.	NEW HAVEN	FACI-91 -1(6)E	92-124	1962	I-91	12	57

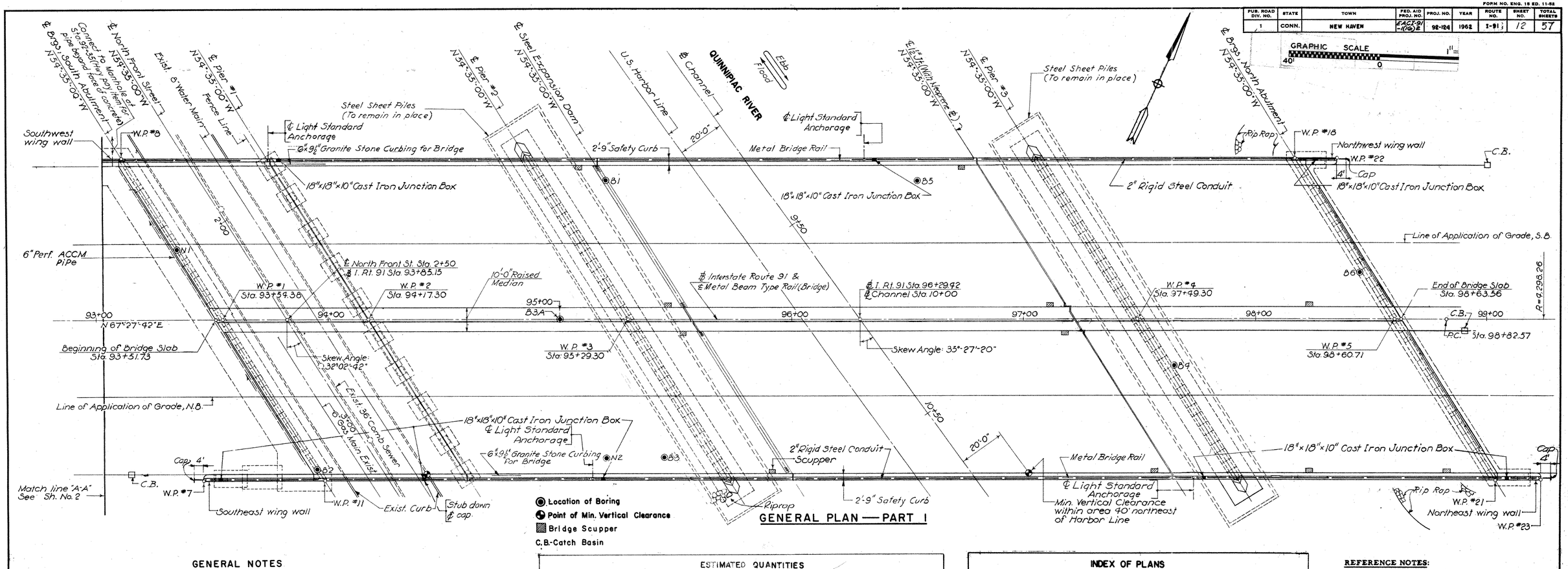

● Location of Boring
Point of Min. Vertical Clearance
Bridge Scupper
C.B.-Catch Basin

GENERAL PLAN — PART I

GENERAL NOTES

SPECIFICATIONS: CONNECTICUT STATE HIGHWAY DEPARTMENT FORM 808 (JANUARY, 1955) AND SPECIAL PROVISIONS.
DESIGN SPECIFICATIONS: STANDARD SPECIFICATIONS FOR HIGHWAY BRIDGES (AASHO-1957) EXCEPT AS MODIFIED BY THE BUREAU OF PUBLIC ROADS "POLICY ON INTERSTATE SYSTEM PROJECTS" (AUGUST, 1956) AND AS SUPPLEMENTED BY THE CONNECTICUT HIGHWAY DEPARTMENT BRIDGE MANUAL (JANUARY, 1961).
BRIDGE SLAB DESIGN - STANDARD SPECIFICATIONS FOR HIGHWAY BRIDGES (AASHO-1961).
LIVE LOAD: H20-S16-44. ALTERNATE 24,000 LB. DUAL AXLE AT 4'-0" O.C.
GROUP LOADS: THE VARIOUS GROUP LOADINGS NOTED ON THE SUBSTRUCTURE PLAN SHEETS REFER TO THE GROUP LOADS AS GIVEN IN SUBSECTION 1.4.1 OF AASHO STANDARD SPECIFICATIONS FOR HIGHWAY BRIDGES.
FUTURE PAVING ALLOWANCE: 25 LB. PER S.F.
COMPOSITE CONSTRUCTION: NO TEMPORARY INTERMEDIATE SUPPORTS SHALL BE USED DURING CONSTRUCTION. SUPERIMPOSED LOADS SHALL BE PLACED WHEN DIRECTED BY THE ENGINEER, BUT NOT LESS THAN 10 DAYS AFTER THE SLAB HAS BEEN POURED.
CONCRETE: CLASS "A" CONCRETE SHALL BE USED FOR THE ENTIRE SUBSTRUCTURE. SEE SPECIAL PROVISIONS. CLASS "C" CONCRETE SHALL BE USED FOR CAST-IN-PLACE CONCRETE PILES AND FOR BRIDGE DECKS INCLUDING CONCRETE SAFETY CURBS, AND PARAPETS. SEE SPECIAL PROVISIONS.
CLASS "C" CONCRETE USED IN CAST-IN-PLACE CONCRETE PILES TO BE INCLUDED IN THE CONTRACT UNIT PRICE FOR CAST-IN-PLACE CONCRETE PILES.
EXPOSED EDGES: EXPOSED EDGES SHALL BE BEVELED 1"x1" UNLESS DIMENSIONED OTHERWISE.
STRUCTURAL STEEL: SEE BRIDGE SHEET NOS. 19, 20, 21, 22, 23, 24, 26, 27, 28, 29, 30 AND 32 FOR ASTM DESIGNATIONS.
PAINTING: SEE SPECIAL PROVISIONS FOR STRUCTURAL STEEL AND METAL BRIDGE RAIL.
JOINT SEAL: SEE SPECIAL PROVISIONS.
REINFORCING STEEL: SEE SPECIAL PROVISIONS FOR DEFORMED STEEL BARS.
WELDING AND WELD INSPECTION: SEE SPECIAL PROVISIONS FOR STRUCTURAL STEEL

FELT: THE COST OF FURNISHING AND PLACING 15 LB. FELT IS INCLUDED IN THE ITEM FOR CLASS "A" CONCRETE.
PARAFFIN: THE COST OF FURNISHING AND APPLYING PARAFFIN IS INCLUDED IN THE ITEM FOR CLASS "C" CONCRETE.
SHEET NUMBERS: WHEREVER REFERENCE IS MADE TO A SHEET NUMBER PERTAINING TO THE STRUCTURE, IT WILL REFER TO THE BRIDGE SHEET NUMBER SHOWN IN THE BOTTOM TITLE BOX.
WORKING POINTS: THE WORKING POINTS DESIGNATED AS W.P. #1 TO W.P. #5 ARE PRIMARY WORKING POINTS. W.P. #6 TO W.P. #23 ARE SECONDARY WORKING POINTS. THE STATIONS OF THE PRIMARY WORKING POINTS ARE SHOWN ON "GENERAL PLAN - PART 1", BRIDGE SHEET NO. 1. THE SECONDARY WORKING POINTS ARE TIED BY DISTANCES AND BEARINGS TO THE PRIMARY WORKING POINTS SHOWN ON "LAYOUT DIAGRAM FOR WORKING POINTS", BRIDGE SHEET NO. 3.

THE INFORMATION, INCLUDING ESTIMATED QUANTITIES OF WORK, SHOWN ON THESE SHEETS IS BASED ON LIMITED INVESTIGATIONS BY THE STATE AND IS IN NO WAY WARRANTED TO INDICATE THE TRUE CONDITIONS OR ACTUAL QUANTITIES OR DISTRIBUTION OF QUANTITIES OF WORK WHICH WILL BE REQUIRED.

ESTIMATED QUANTITIES

ITEM	UNIT	QUANTITY
STRUCTURE EXCAVATION (COMPLETE)	C.Y.	1300
STRUCTURE EXCAVATION (EXCLUDING COFFERDAM & PUMPING)	C.Y.	4870
6" PERF. A.C.C.M. PIPE	L.F.	154
6" CAST IRON PIPE FOR BRIDGE DRAINAGE	L.F.	105
TEST PILE (CAST-IN-PLACE CONCRETE PILE TYPE 1 - 65' LENGTH)	EACH	1
TEST PILE (CAST-IN-PLACE CONCRETE PILE TYPE 1 - 75' LENGTH)	EACH	1
TEST PILE (CAST-IN-PLACE CONCRETE PILE TYPE 1 - 100' LENGTH)	EACH	1
TEST PILE (CAST-IN-PLACE CONCRETE PILE TYPE 2 - 75' LENGTH)	EACH	1
TEST PILE (CAST-IN-PLACE CONCRETE PILE TYPE 2 - 100' LENGTH)	EACH	1
PILE LOADING TEST FOR PILES TYPE 1	EACH	3
6" A.C.C.M. PIPE ELBOW	L.F.	12
CAST-IN-PLACE CONCRETE PILES - TYPE 1	L.F.	17,700
CAST-IN-PLACE CONCRETE PILES - TYPE 2	L.F.	16,400
SPLICING CAST-IN-PLACE CONCRETE PILES TYPE 1	EACH	15
SPLICING CAST-IN-PLACE CONCRETE PILES TYPE 2	EACH	12
STEEL SHEET PILES	LB.	1,040,000
TIMBER SHEET PILES	M.B.F.	1.72
COFFERDAM AND PUMPING	L.F.	890
CLASS "A" CONCRETE	C.Y.	3,384
CLASS "C" CONCRETE	C.Y.	2,250
UNDERWATER CONCRETE	C.Y.	2,290
1/2" PREFORMED EXPANSION JOINT FILLER FOR BRIDGES	S.F.	1,180
1" PREFORMED EXPANSION JOINT FILLER FOR BRIDGES	S.F.	6
1-1/2" PREFORMED EXPANSION JOINT FILLER FOR BRIDGES	S.F.	21
NEOPRENE PLATE FOR BRIDGE EXPANSION JOINT	L.F.	330
DIMENSION STONE MASONRY	C.Y.	336
DEFORMED STEEL BARS	LB.	823,000
STRUCTURAL STEEL	LB.	3,950,000
DAMPPROOFING	S.Y.	878
METAL BRIDGE RAIL	L.F.	1,126
METAL BEAM TYPE RAIL (BRIDGE)	L.F.	512
PERVIOUS STRUCTURE BACKFILL	C.Y.	5,500
SHEAR CONNECTORS	L.F.	1,140
6" x 9-1/2" GRANITE STONE CURBING FOR BRIDGE	L.F.	1,170
RIPRAP	TON	3,540
BRIDGE SCUPPER	EACH	11
2" RIGID STEEL CONDUIT IN STRUCTURE	L.F.	1,250
18"x18"x10" CAST IRON JUNCTION BOX	EACH	9
REMOVAL OF PILE DRIVING OBSTRUCTIONS	C.Y.	5
24" CORED HOLES FOR PILES	L.F.	100
GRAVEL FILL	C.Y.	350
PILE LOADING TEST FOR PILES — TYPE 2	EACH	2

INDEX OF PLANS

1. GENERAL PLAN
2. GRADING PLAN
3. PAVING PLAN
4. BORINGS I
5. BORINGS II
6. ELEVATION AND PROFILES
7. PILE PLAN FOR ABUTMENTS
8. PILE PLAN FOR PIERS
9. SOUTH ABUTMENT
10. NORTH ABUTMENT
11. ABUTMENT DETAILS I
12. ABUTMENT DETAILS II
13. PIER #1
14. DETAILS FOR PIER #1
15. PIER #2
16. PIER #3
17. PARAPET AND SLAB DETAILS
18. BRIDGE SLAB DETAILS
19. FRAMING PLAN
20. BRIDGE CROSS SECTIONS
21. GIRDER DETAILS I
22. GIRDER DETAILS II
23. GIRDER DETAILS III
24. GIRDER DETAILS IV
25. GIRDER DETAILS V
26. LINK & WIND LOCK
27. HINGE DETAILS
28. EXPANSION DAM
29. INTERMEDIATE DIAPHRAGMS
30. END DIAPHRAGMS
31. SCUPPER DETAILS
32. BEARINGS
33. METAL BRIDGE RAIL
34. METAL BEAM TYPE RAIL (BRIDGE)
35. ELECTRICAL DETAILS

REFERENCE NOTES:

1. GENERAL PLAN - PART II IS SHOWN ON SHEET NO. 2.
2. SEE SHEET NO. 3 FOR LOCATION OF LIGHTING STANDARDS, BRIDGE SCUPPERS, AND SPACING OF POSTS OF METAL BRIDGE RAIL AND METAL BEAM TYPE RAIL.
3. CATCH BASINS SHOWN ON THIS SHEET ARE INCLUDED IN HIGHWAY ESTIMATE. FOR DETAILS AND LOCATION SEE HIGHWAY PLANS.
4. COFFERDAMS AND PUMPING ITEM IS FOR PIER #2 AND PIER #3. SEE BRIDGE SHEET #15 AND #16 FOR PAYMENT LINE.
5. ALL REFERENCES TO SHEET NUMBERS ON BRIDGE SHEETS REFER TO BRIDGE SHEET NUMBERS.

CONCRETE DISTRIBUTION:

SUPERSTRUCTURE	2,250	CY
SUBSTRUCTURE	1,943	CY
FOOTINGS	1,441	CY
UNDERWATER CONCRETE	2,290	CY
TOTAL	7,924	CY

3093

INSPECTION OF FIELD WELDS

METHOD	UNIT	QUANTITY
RADIOGRAPHIC	IN.	0
MAGNETIC PARTICLE	L.F.	0

REVISIONS

NO.	DATE	DESCRIPTION

CONNECTICUT
STATE HIGHWAY DEPARTMENT

TOWN OF NEW HAVEN
INTERSTATE ROUTE 91
OVER
QUINNIPIAC RIVER
GENERAL PLAN

DESIGNED BY LEONARD S. WEGMAN CO., CONTRACTING ENGINEER
SCALES 1" = 20'-0"
MADE BY H.L., H.A.E. DATE 4-26-62
CHECKED BY L.P., L.K. DATE 4-26-62
APPROVED [signature] DATE 4-26-62
PROJECT NO. 92-124
BRIDGE SHEET NO. 1 OF 35

M 258 01

92 124

12 12

TRIANGLE LITHO PRINT CO., INC.

FORM NO. ENG. 18 ED. 11-52

PUB. ROAD DIV. NO.	STATE	TOWN	FED. AID PROJ. NO.	PROJ. NO.	YEAR	ROUTE NO.	SHEET NO.	TOTAL SHEETS
1	CONN.	NEW HAVEN	FACI-91-1(16)2	92-124	1962	I-91	13	57

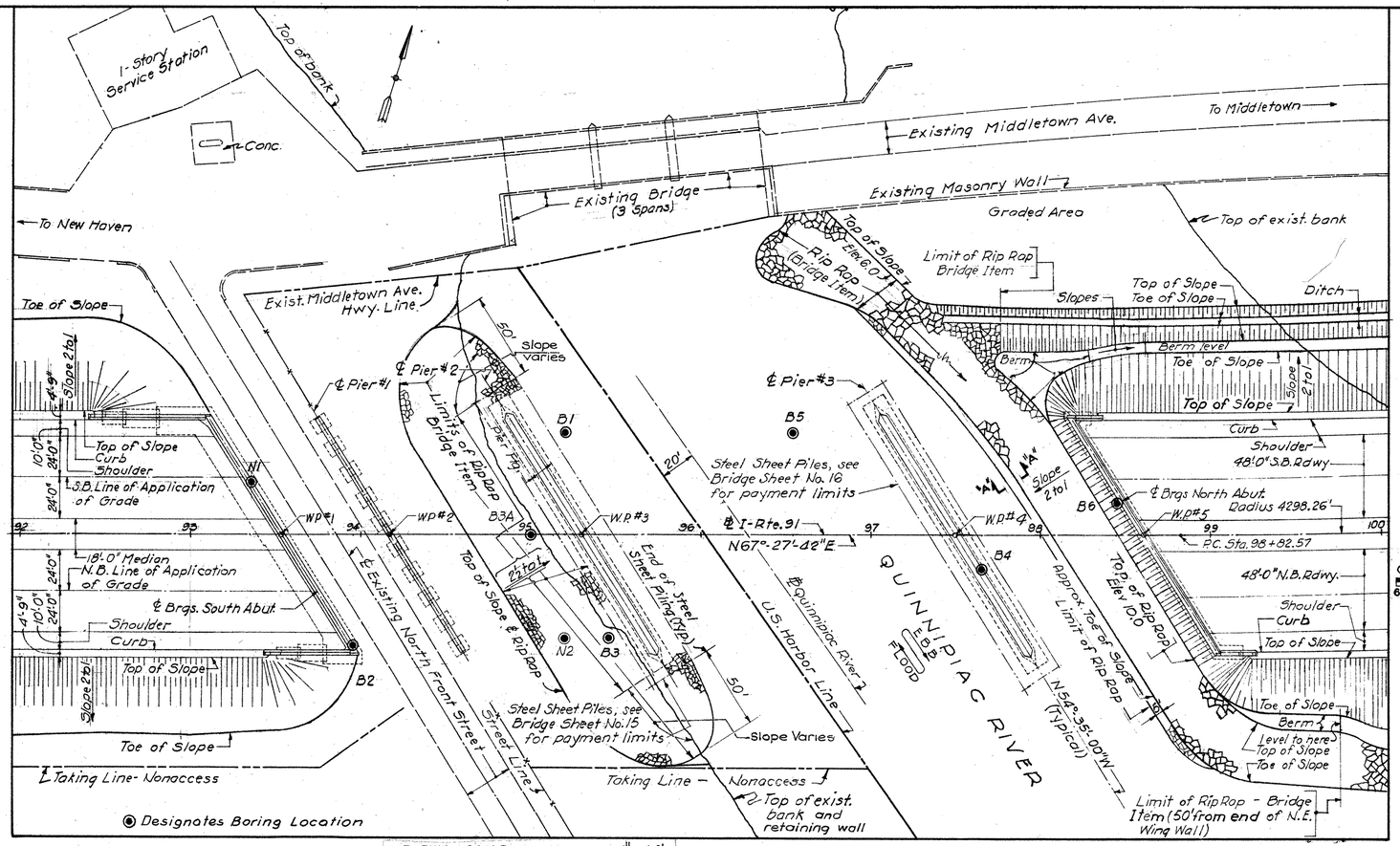

GRAPHIC SCALE 1" = 40'

GRADING PLAN

SCALE: 1" = 40'-0"

The Existing Buildings and Retaining Walls not shown- See Highway Plans

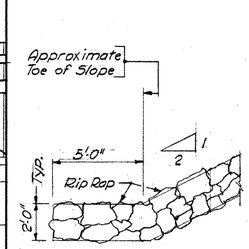

SECTION "A-A"

SCALE: 1/4" = 1'-0"

GRAPHIC SCALE 1/4" = 1'

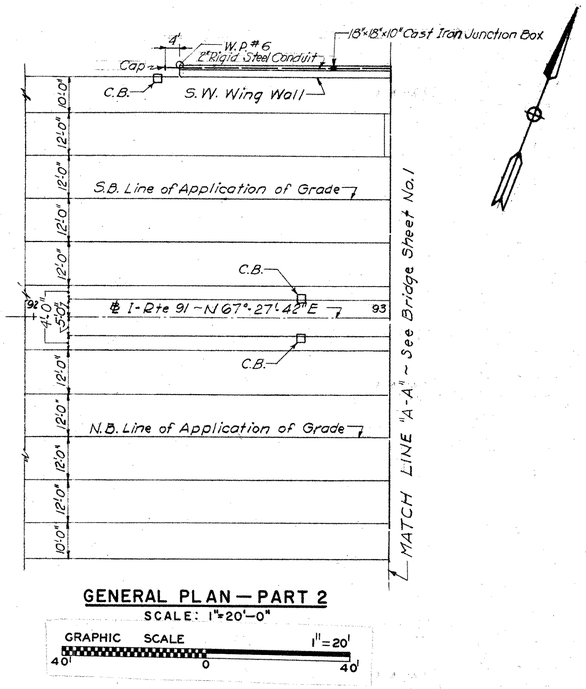

GENERAL PLAN — PART 2

SCALE: 1" = 20'-0"

GRAPHIC SCALE 1" = 20'

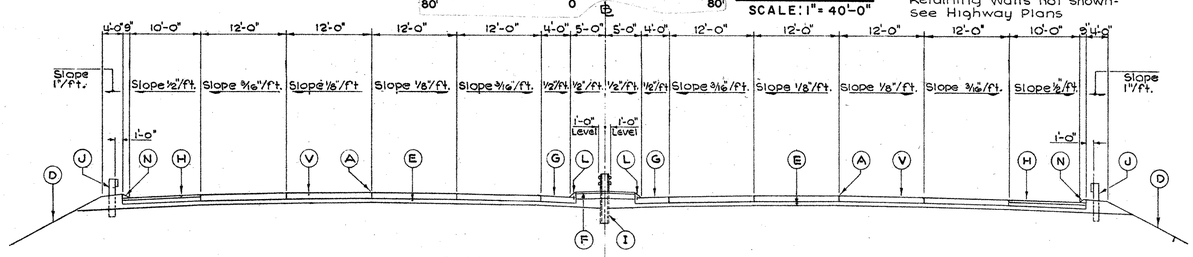

SOUTHERLY APPROACH SECTION (TYPICAL PROJECT ROADWAY SECTION)

SCALE: 1" = 10'-0"

GRAPHIC SCALE 1" = 10'

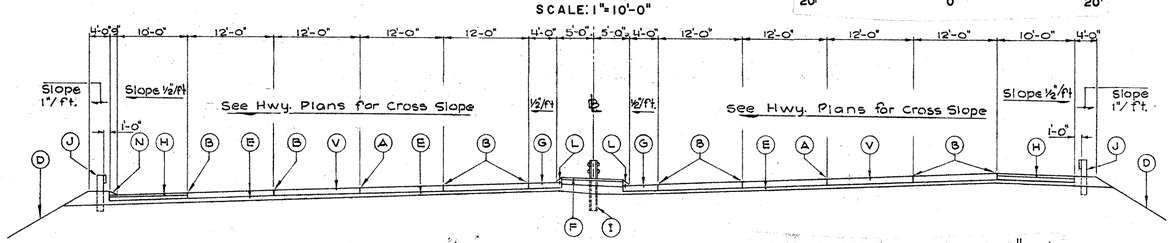

NORTHERLY APPROACH SECTION

SCALE: 1" = 10'-0"

GRAPHIC SCALE 1" = 10'

NOTES:

1. SEE SHEET NOS. 6 AND 12 FOR ADDITIONAL PAYMENT LIMITS OF RIPRAP.
2. SEE SHEET NO 1 AND HIGHWAY PLANS FOR DRAINAGE SYSTEM.

L E G E N D

A POINT OF APPLICATION OF GRADE
B POINT OF APPLICATION OF BANK
D. SLOPE 6:1 ON FILLS OF 8 FT. OR LESS ; SLOPE 2:1 ON FILLS OVER 8 FT.
E. PLACE 10" SUBBASE OF DUMP ROAD, BARNES AVE. & FLINT STREET.
ON ALL OTHER ROADS PLACE 10" SUBBASE IN CUTS AND FILLS UP THROUGH 5'-0" IN HEIGHT.
6" SUBBASE IN FILLS GREATER THAN 5'0" OR AS DIRECTED.
F. LOAM 6" IN DEPTH
G. 9" CONCRETE PAVEMENT
H. 3" TWO COURSE BITUMINOUS CONCRETE ON 6" ROLLED GRAVEL BASE
I. METAL BEAM TYPE RAIL (TYPE MD-B)
J. THREE CABLE GUIDE RAILING.
L. DOWELED CONCRETE PARK CURBING.
N. BITUMINOUS CONCRETE LIP CURBING (WHERE INDICATED ON PLAN).
U. CONCRETE PARK CURBING
V. 9" REINFORCED CONCRETE PAVEMENT
Y. 2 1/2" TWO COURSE BITUMINOUS CONCRETE ON 3" BITUMINOUS MACADAM BASE ON 3" BROKEN STONE BASE.
Z. 2 1/2" BITUMINOUS MACADAM ON 6" ROLLED GRAVEL BASE.

NOT IN THIS CONTRACT

REVISIONS		
NO.	DATE	DESCRIPTION

CONNECTICUT
STATE HIGHWAY DEPARTMENT

TOWN OF NEW HAVEN
INTERSTATE ROUTE 91
OVER
QUINNIPIAC RIVER
GRADING PLAN

DESIGNED BY LEONARD S. WEGMAN CO., CONTRACTING ENGINEER
SCALES AS NOTED
MADE BY ERC., H.A.E. DATE 4-24-62
CHECKED BY L.K. DATE 4-24-62
APPROVED [signature] DATE 4-24-62
PROJECT NO. 92-124
BRIDGE SHEET NO. 2 OF 35

92 124

M 253 01

13 13

FORM NO. ENG. 18 ED. 11-52

PUB. ROAD DIV. NO.	STATE	TOWN	FED. AID PROJ. NO.	PROJ. NO.	YEAR	ROUTE NO.	SHEET NO.	TOTAL SHEETS
1	CONN.	NEW HAVEN	BRCZ-91 (116)2	92-124	1962	I-91	14	57

GRAPHIC SCALE 1" = 20'
40' 0 40'

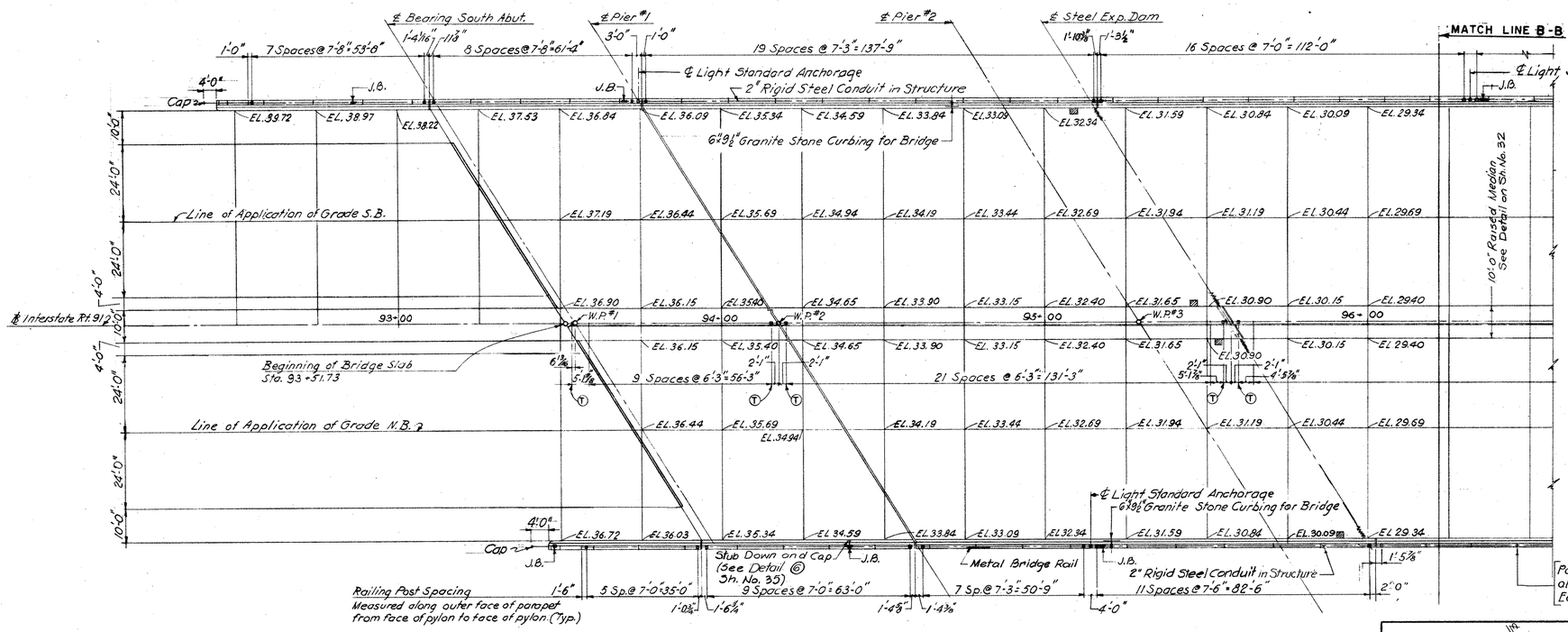

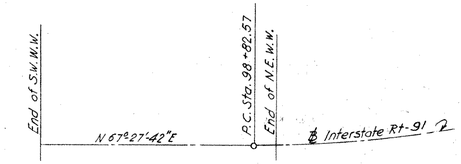

ALIGNMENT DIAGRAM

N.T.S.

Curve Data
D = 1° 19' 58.8"
Δ = 18° 53' 39.5"
R = 4298.260'
T = 715.207'
L = 1417.428'

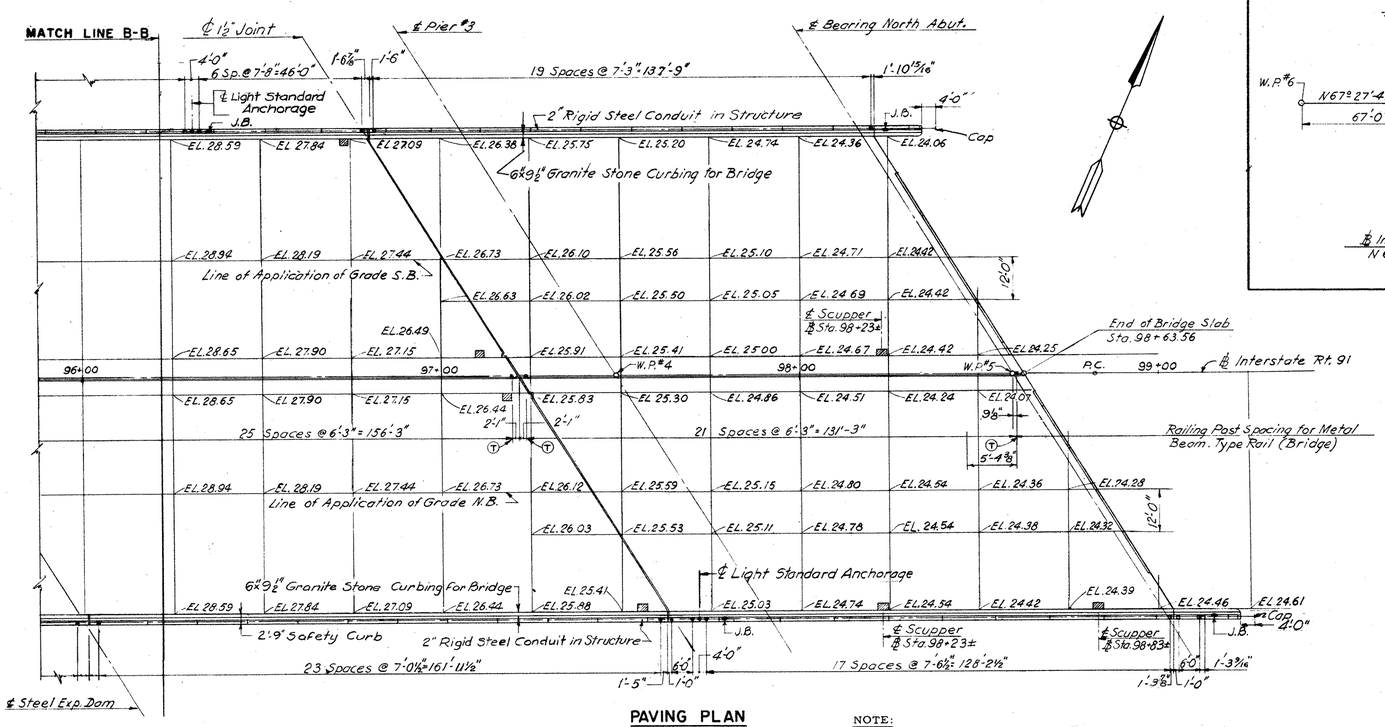

Ⓣ Terminal Post
▨ Bridge Scupper
▬ J.B. Cast Iron Junction Box 18"x18"x10"

PAVING PLAN

ALL DIMENSIONS SHOWN ARE HORIZONTAL DIMENSIONS.
ELEVATIONS INDICATED ON PAVING PLAN ARE GIVEN AT 25-FOOT INTERVALS.

NOTE:
SEE SHEET NO. 28 FOR ADDITIONAL INFORMATION ABOUT THE LOCATION OF BRIDGE SCUPPERS.

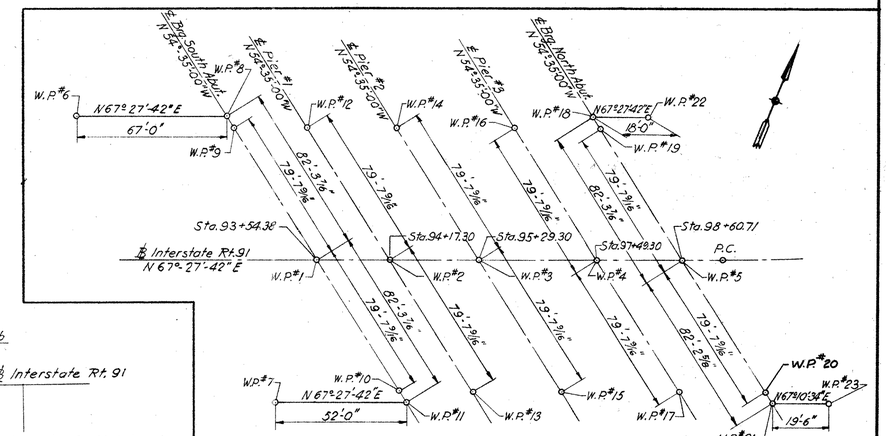

LAYOUT DIAGRAM FOR WORKING POINTS

N.T.S.

REVISIONS		
NO.	DATE	DESCRIPTION

CONNECTICUT
STATE HIGHWAY DEPARTMENT
TOWN OF NEW HAVEN
INTERSTATE ROUTE 91 OVER QUINNIPIAC RIVER
PAVING PLAN

DESIGNED BY LEONARD S. WEGMAN CO., CONTRACTING ENGINEER
SCALES 1" = 20'-0" EXCEPT AS NOTED
MADE BY A.K., H.A.E. DATE 4-24-62
CHECKED BY F.G., L.K. DATE 4-24-62
APPROVED [signature] DATE 4-24-62
PROJECT NO. 92-124
BRIDGE SHEET NO. 3 OF 35

OGILVIE PRESS, INC., BROOKLYN 17, N. Y. REPROVEL NO. 400M

FORM NO. ENG. 15 ED. 11-52

PUB. ROAD DIV. NO.	STATE	TOWN	FED. AID PROJ. NO.	PROJ. NO.	YEAR	ROUTE NO.	SHEET NO.	TOTAL SHEETS
1	CONN.	NEW HAVEN	FACI-91-1(6)E	92-124	1962	I-91	15	57

GRAPHIC SCALE VERT. 1"=8'
12' 0 12'

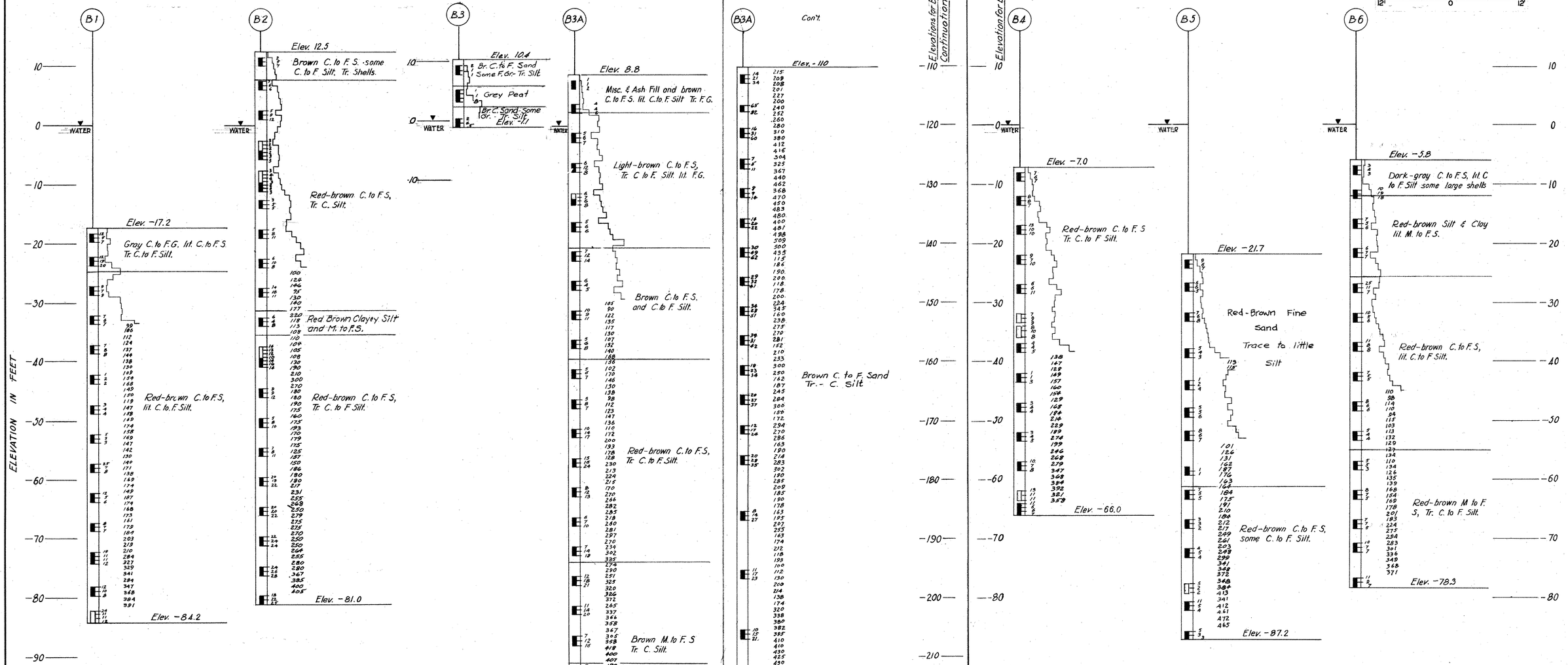

THE INFORMATION, INCLUDING ESTIMATED QUANTITIES OF WORK, SHOWN ON THESE SHEETS IS BASED ON LIMITED INVESTIGATIONS BY THE STATE AND IS IN NO WAY WARRANTED TO INDICATE THE TRUE CONDITIONS OR ACTUAL QUANTITIES OR DISTRIBUTION OF QUANTITIES OF WORK WHICH WILL BE REQUIRED.

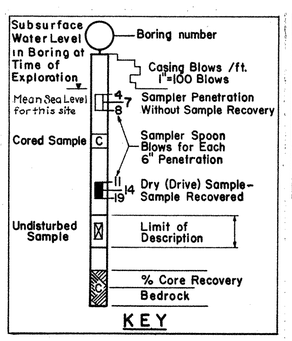

ABBREVIATIONS	
C.	Coarse
F.	Fine
M.	Medium
G.	Gravel
S.	Sand
Boul.	Boulders
Cobb.	Cobbles
lit.	little
Tr.	Trace
Misc.	Miscellaneous
Org.	Organic

	B1 to B6
Casing	3 5/16"
Hammer Weight	
Hammer Fall	24"
Sampler	1 3/8"
Hammer Weight	140#
Hammer Fall	30"

BORINGS

REVISIONS		
NO.	DATE	DESCRIPTION

CONNECTICUT
STATE HIGHWAY DEPARTMENT
TOWN OF NEW HAVEN
INTERSTATE ROUTE 91
OVER
QUINNIPIAC RIVER
BORINGS I

DESIGNED BY LEONARD S. WEGMAN CO., CONTRACTING ENGINEER
SCALES VERT.: 1"=8'-0" HORIZ.: 1"=100 BL.
MADE BY W.H. DATE 4-24-62
CHECKED BY L.K. DATE 4-24-62
APPROVED [signature] DATE 4-24-62

PROJECT NO. 92-124
BRIDGE SHEET NO. 4 OF 35

92 124 M 253 01 15

FORM NO. ENG. 15 ED. 11-52

PUB. ROAD DIV. NO.	STATE	TOWN	FED. AID PROJ. NO.	PROJ. NO.	YEAR	ROUTE NO.	SHEET NO.	TOTAL SHEETS
1	CONN.	NEW HAVEN	FAC-91 1(12)E	92-124	1962	I-91	16	57

GRAPHIC SCALE VERT 1" = 8'

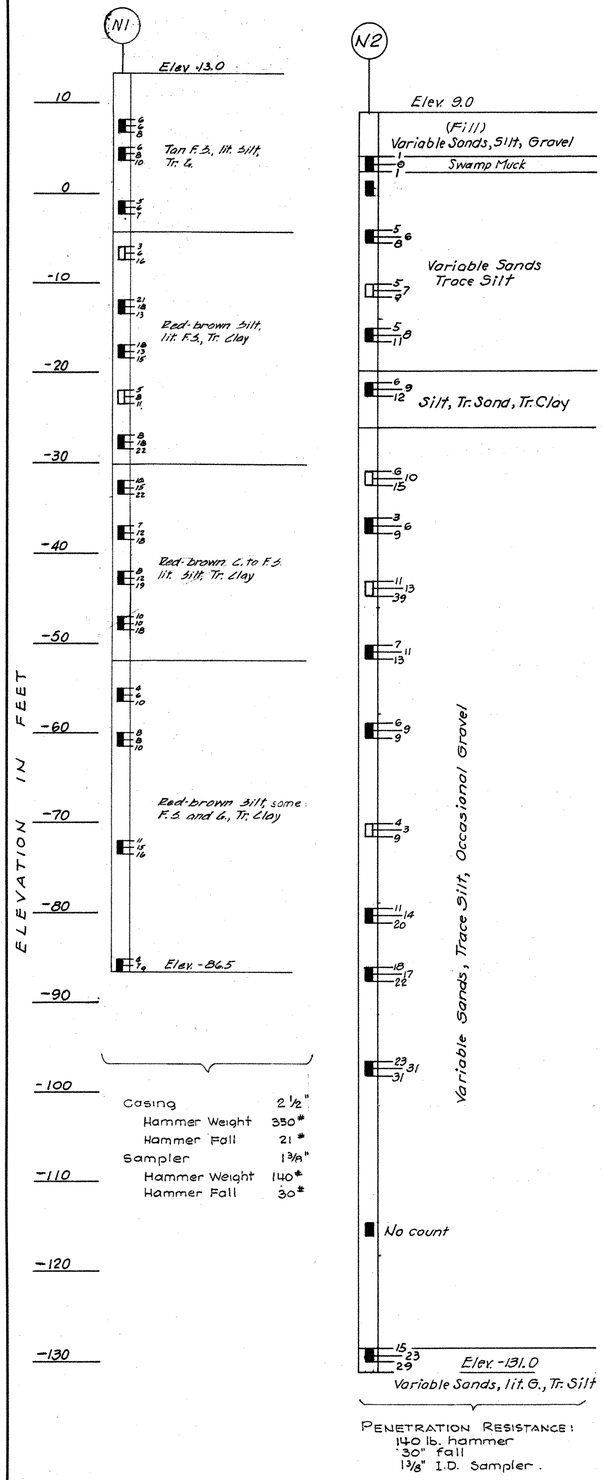

For legend and abbreviations see Sheet No. 5

THE INFORMATION, INCLUDING ESTIMATED QUANTITIES OF WORK, SHOWN ON THESE SHEETS IS BASED ON LIMITED INVESTIGATIONS BY THE STATE AND IS IN NO WAY WARRANTED TO INDICATE THE TRUE CONDITIONS OR ACTUAL QUANTITIES OR DISTRIBUTION OF QUANTITIES OF WORK WHICH WILL BE REQUIRED.

CONNECTICUT
STATE HIGHWAY DEPARTMENT

TOWN OF NEW HAVEN
INTERSTATE ROUTE 91
OVER
QUINNIPIAC RIVER

BORINGS II

REVISIONS		
NO.	DATE	DESCRIPTION

DESIGNED BY LEONARD S. WEGMAN CO., CONTRACTING ENGINEER

SCALES VERT.: 1" = 8'-0"; HORIZ.: 1" = 100 BL.

MADE BY E.R.C. DATE 4-24-62

CHECKED BY L.K. DATE 4-24-62

APPROVED [signature] DATE 4-24-62

PROJECT NO. 92-124

BRIDGE SHEET NO. 5 OF 35

92 124

M 253 01

16

FORM NO. ENG. 18 ED. 11-52

PUB. ROAD DIV. NO.	STATE	TOWN	FED. AID PROJ. NO.	PROJ. NO.	YEAR	ROUTE NO.	SHEET NO.	TOTAL SHEETS
1	CONN.	NEW HAVEN	FAC-5-91 (176)E	92-124	1962	I-91	17	57

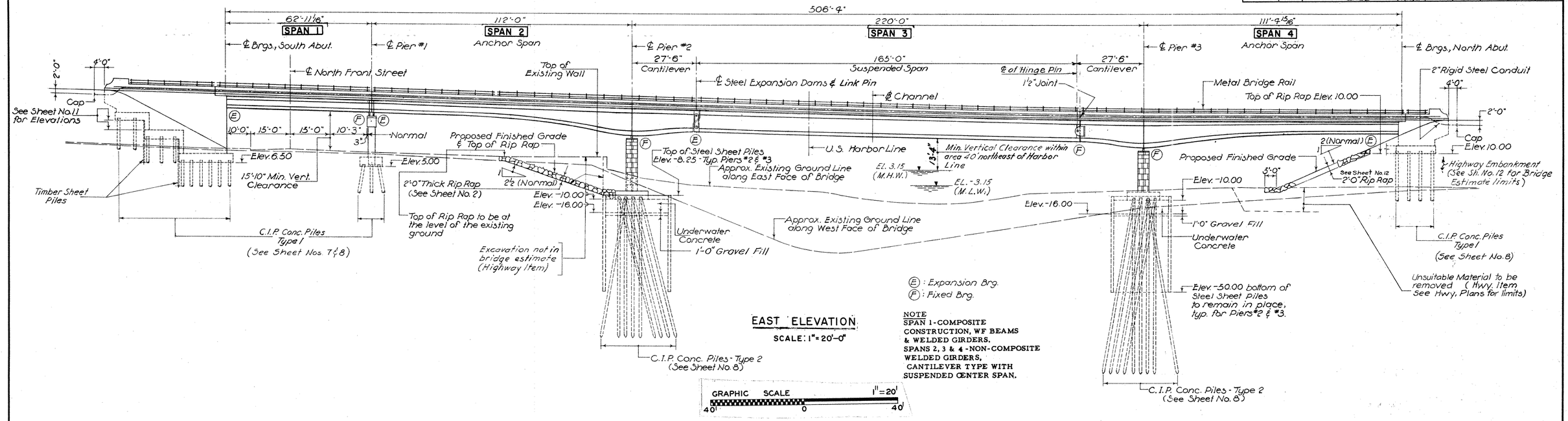

EAST ELEVATION

SCALE: 1" = 20'-0"

NOTE
SPAN 1 - COMPOSITE CONSTRUCTION, WF BEAMS & WELDED GIRDERS.
SPANS 2, 3 & 4 - NON-COMPOSITE WELDED GIRDERS, CANTILEVER TYPE WITH SUSPENDED CENTER SPAN.

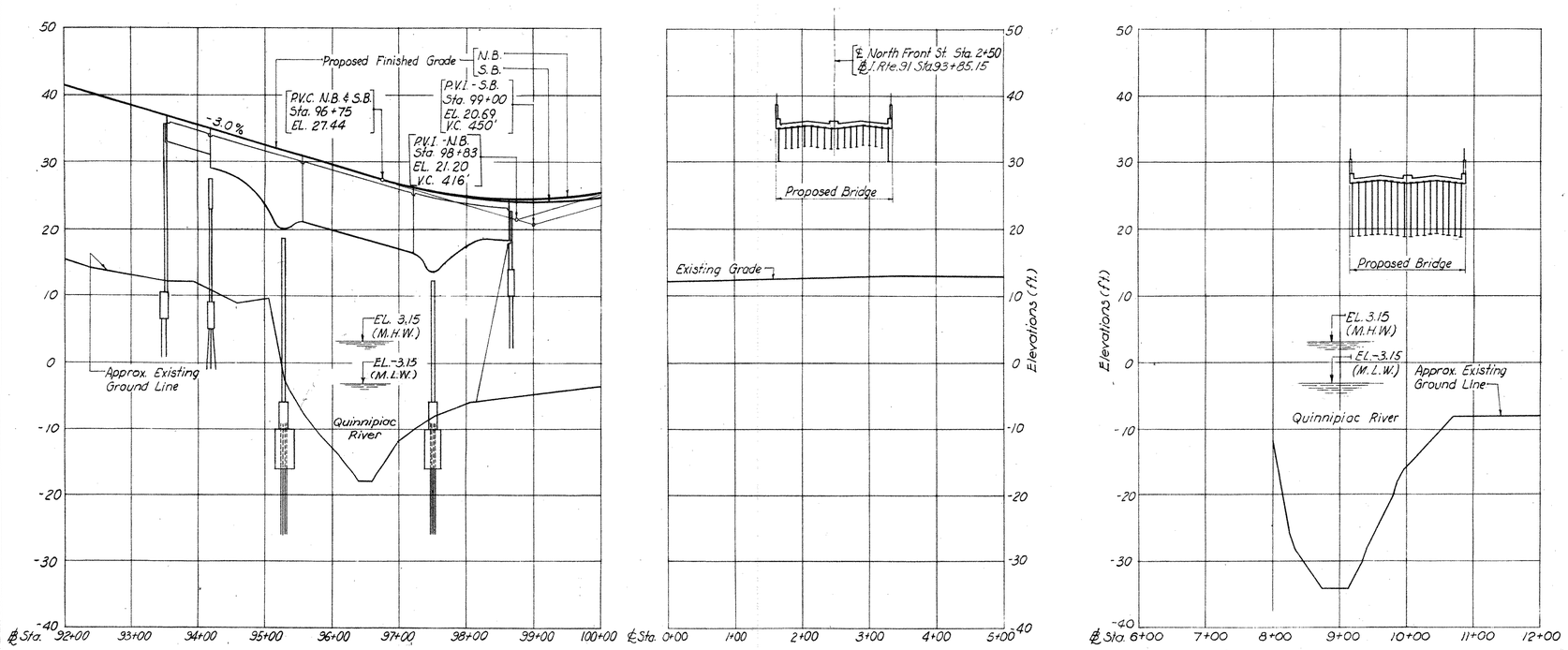

INTERSTATE ROUTE 91

GRAPHIC SCALE HORIZ. 1" = 100'
200' 0 200'

NORTH FRONT STREET

PROFILES

SCALE: Horiz.: 1" = 100'-0" Vert.: 1" = 10'-0"

GRAPHIC SCALE VERT. 1" = 10'
20' 0 20'

QUINNIPIAC RIVER

THE INFORMATION, INCLUDING ESTIMATED QUANTITIES OF WORK, SHOWN ON THESE SHEETS IS BASED ON LIMITED INVESTIGATIONS BY THE STATE AND IS IN NO WAY WARRANTED TO INDICATE THE TRUE CONDITIONS OR ACTUAL QUANTITIES OR DISTRIBUTION OF QUANTITIES OF WORK WHICH WILL BE REQUIRED.

REVISIONS		
NO.	DATE	DESCRIPTION

CONNECTICUT
STATE HIGHWAY DEPARTMENT

TOWN OF NEW HAVEN
INTERSTATE ROUTE 91
OVER
QUINNIPIAC RIVER
ELEVATION AND PROFILES

DESIGNED BY LEONARD S. WEGMAN CO., CONTRACTING ENGINEER
SCALES AS NOTED
MADE BY H.L., H.A.E. DATE 4-24-62
CHECKED BY L.P., L.K. DATE 4-24-62
APPROVED [signature] DATE 4-24-62

PROJECT NO. 92-124
BRIDGE SHEET NO. 6 OF 35

FORM NO. ENG. 15 ED. 11-52

PUB. ROAD DIV. NO.	STATE	TOWN	FED. AID PROJ. NO.	PROJ. NO.	YEAR	ROUTE NO.	SHEET NO.	TOTAL SHEETS
1	CONN.	NEW HAVEN	EACT-91-1(16)2	92-124	1962	I-91	18	57

NOTES:

1. ○ DENOTES VERTICAL PILE
2. ◑ DENOTES BATTER PILE, 3 ON 1 BATTER
3. ALL PILES SHOWN ON THIS SHEET ARE CAST- IN- PLACE CONCRETE PILES (TYPE 1)
4. FOR ESTIMATING PURPOSES , THE LENGTHS OF PILES ARE ASSUMED TO BE AS FOLLOWS:

	VERTICAL PILE	BATTER PILE
SOUTH ABUTMENT	53 FT. TO 74 FT.	55 FT. TO 78 FT.
NORTH ABUTMENT	80 FT.	84 FT.

5. THE LENGTHS OF TEST PILES SHOWN ON THIS SHEET ARE AS FOLLOWS: TEST PILE NO. 1 - 65 FT.
   TEST PILE NO. 3 - 100 FT.
6. PILE LOAD: THE MAXIMUM DESIGN PILE LOAD UNDER GROUP I LOADS IS 45 TONS PER PILE.
7. THE DIMENSIONS OF PILE SPACING ARE HORIZONTAL DIMENSIONS AT BOTTOM OF FOOTING LEVEL.
8. SEE SHEET NO. 11 FOR DETAILS OF FOOTING STEPS.

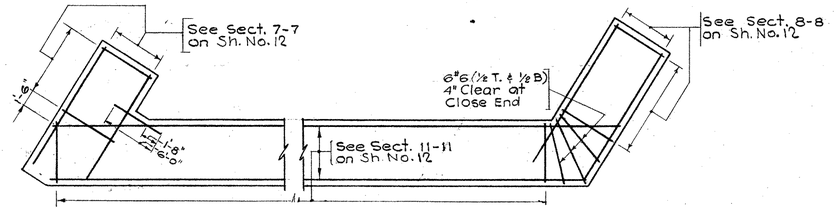

NORTH ABUTMENT FOOTING REINFORCEMENT

N.T.S.

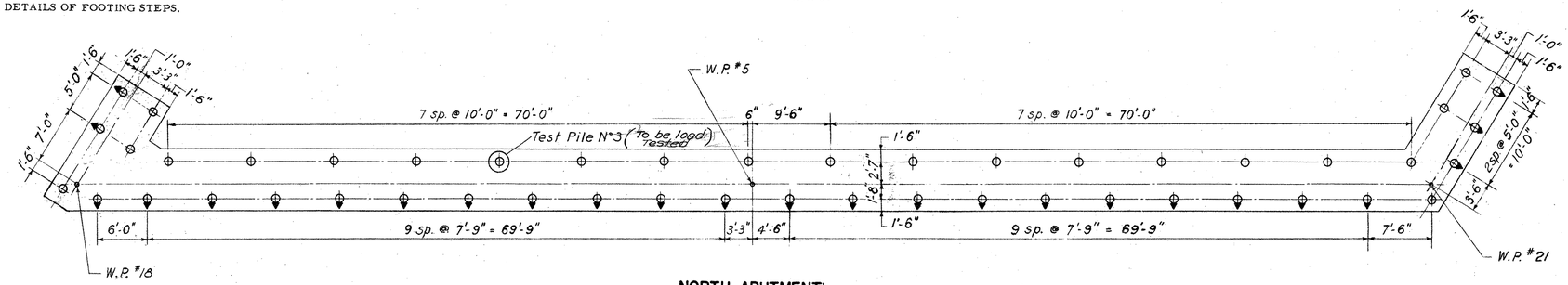

NORTH ABUTMENT

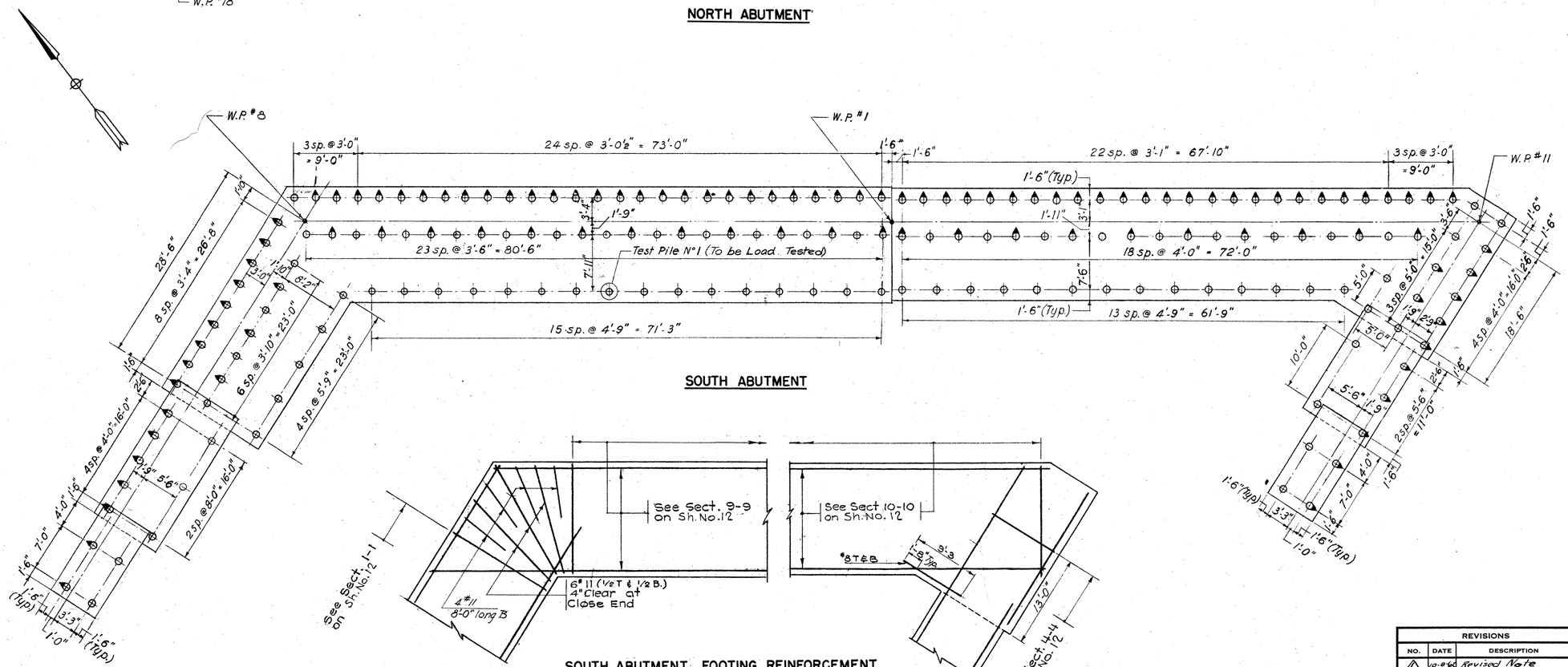

SOUTH ABUTMENT

SOUTH ABUTMENT FOOTING REINFORCEMENT

N.T.S.

GRAPHIC SCALE 1/8" = 1'

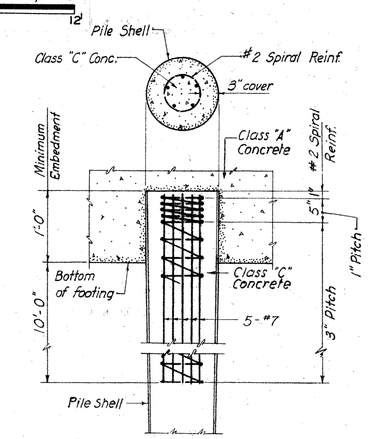

DETAIL OF CAST-IN-PLACE CONCRETE PILE (TYPE I)

N.T.S.

△1 PILES SHALL BE REINFORCED AS SHOWN WHEN SHELL IS ~~#9 GAGE OR~~ THINNER. THAN #9 GAGE. NO REINFORCEMENT REQUIRED FOR A PILE WITH A SHELL ~~THICKER THAN~~ #9 GAGE. OR THICKER.

PILE SPLICES SHALL BE MADE IN ACCORDANCE WITH THE METHOD AS RECOMMENDED BY THE MANUFACTURER OF THE PILE SHELL BEING USED. THE METHOD SHALL ALSO BE SUBJECT TO THE APPROVAL OF THE ENGINEER.

REVISIONS		
NO.	DATE	DESCRIPTION
△1	10-8-62	Revised Note

CONNECTICUT
STATE HIGHWAY DEPARTMENT
TOWN OF NEW HAVEN
INTERSTATE ROUTE 91
OVER
QUINNIPIAC RIVER
PILE PLAN FOR ABUTMENTS

DESIGNED BY LEONARD S. WEGMAN CO., CONTRACTING ENGINEER
SCALES 1/8" = 1'-0" EXCEPT AS NOTED
MADE BY W.N.L. , H.A.E. DATE 4-24-62
CHECKED BY L.P. , L.K. DATE 4-24-62
APPROVED Herbert Mandelbaum DATE 4-24-62
PROJECT NO. 92-124
BRIDGE SHEET NO. 7 OF 35

92 124 N258 01 18 18

FORM NO. ENG. 15 ED. 11-58

PUB. ROAD DIV. NO.	STATE	TOWN	FED. AID PROJ. NO.	PROJ. NO.	YEAR	ROUTE NO.	SHEET NO.	TOTAL SHEETS
1	CONN.	NEW HAVEN	64F(8) 10642	92-124	1962	I-91	19	57

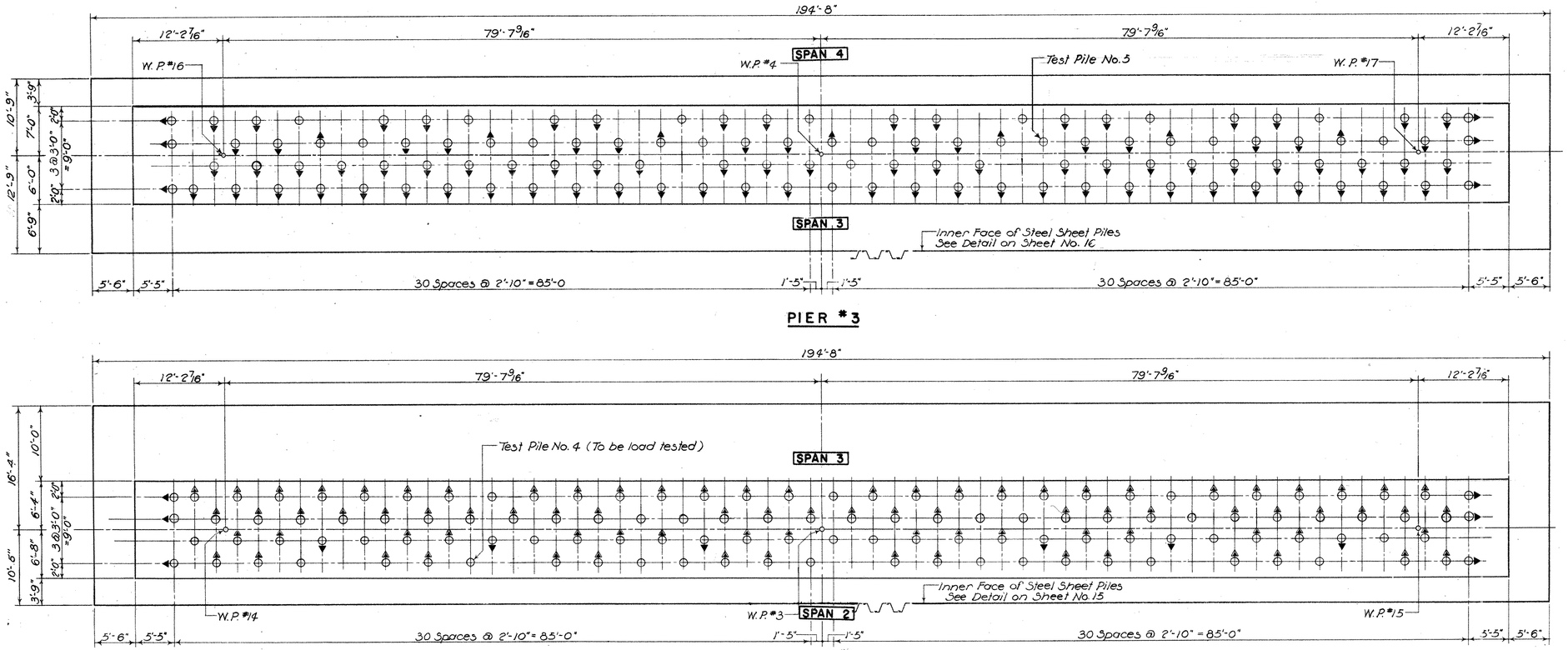

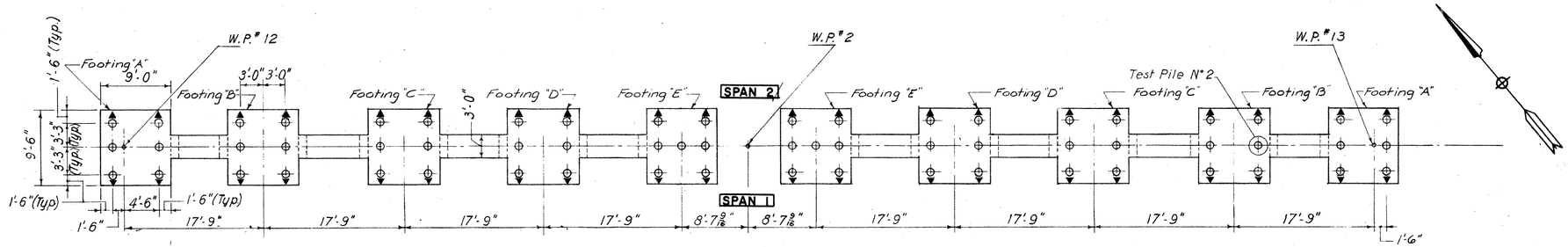

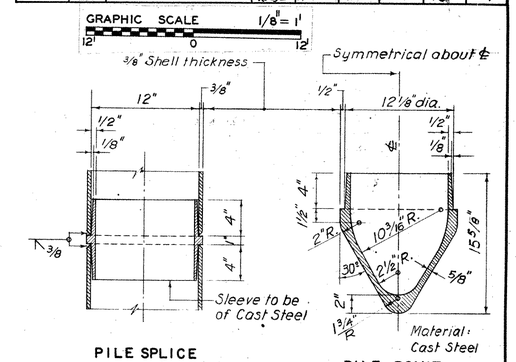

PILE SPLICE
SCALE: 1 1/2" = 1'-0"

PILE POINT
SCALE: 1 1/2" = 1'-0"

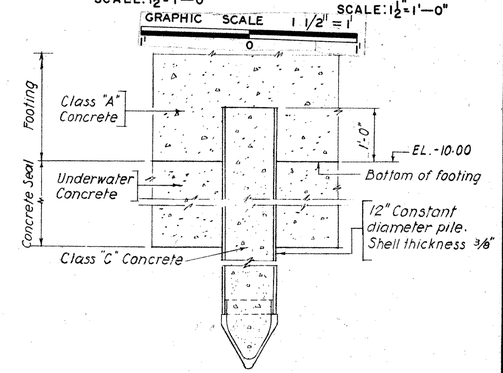

SECTION THROUGH PILE
SCALE: 3/4" = 1'-0"

DETAILS OF CAST-IN-PLACE CONCRETE PILE (TYPE 2)

GRAPHIC SCALE 3/4" = 1'

NOTES

1. O DENOTES VERTICAL PILE
2. BATTER PILES ARE DESIGNATED AS FOLLOWS: (THE SYMBOL POINTS IN THE DIRECTION OF BATTER)
   6 ON 1 BATTER O▶
   4 ON 1 BATTER O▶ (ALL PIER #2 PILES WITH THE DIRECTION OF BATTER TOWARDS SPAN 3)
3. ALL PILES SHOWN FOR PIER #1 ARE CAST-IN-PLACE CONCRETE PILES (TYPE 1)
4. ALL PILES SHOWN UNDER PIERS #2 AND #3 ARE CAST-IN-PLACE CONCRETE PILES (TYPE 2)
5. FOR ESTIMATING PURPOSES, THE LENGTHS OF PILES ARE ASSUMED TO BE AS FOLLOWS:

	VERTICAL PILE	BATTER PILE
PIER #1	60 FT.	61 FT.
PIER #2	61 FT.	62 FT.
PIER #3	76 FT.	77 FT.

6. THE LENGTHS OF TEST PILES SHOWN ON THIS SHEET ARE TO BE AS FOLLOWS:
   TEST PILE NO. 2 - 75 FT.
   TEST PILE NO. 4 - 75 FT.
   TEST PILE NO. 5 - 90 FT.
7. PILE LOAD:

		MAX. PILE LOAD UNDER GROUP 1 LOADS	MAXIMUM DESIGN LOAD	
			GROUP LOADING	MAX. PILE LOAD
PIER #1	FOOTING A	32 TONS/PILE	GROUP VI	45 TONS/PILE
	FOOTING B	38	GROUP VI	45
	FOOTING C	43	GROUP I	43
	FOOTING D	36	GROUP VI	44
	FOOTING E	42	GROUP VI	45
PIER #2		60	GROUP I	60
PIER #3		57	GROUP I	57

8. PILE SPACINGS FOR PIER #1 ARE SHOWN IN A HORIZONTAL PLANE AT ELEV. 5.0. PILE SPACINGS FOR PIERS #2 & #3 ARE SHOWN IN A HORIZONTAL PLANE AT ELEV. -10.0
9. ALL PILES FOR PIERS #2 AND #3 SHALL HAVE A MINIMUM PENETRATION OF 56' BELOW PLAN CUTOFF.
10. TEST PILES NOS 2 & 5 SHALL BE LOAD TESTED IF DIRECTED BY THE ENGINEER.

REVISIONS		
NO.	DATE	DESCRIPTION

CONNECTICUT
STATE HIGHWAY DEPARTMENT
TOWN OF NEW HAVEN
INTERSTATE ROUTE 91
OVER
QUINNIPIAC RIVER
PILE PLAN FOR PIERS

DESIGNED BY LEONARD S. WEGMAN CO., CONTRACTING ENGINEER
SCALES 1/8" = 1'-0" EXCEPT AS NOTED
MADE BY H.L., W.N.L. DATE 4-20-62
CHECKED BY L.P., L.K. DATE 4-20-62
APPROVED [signature] DATE 4-20-62
PROJECT NO. 92-124
BRIDGE SHEET NO. 8 OF 35

TRIANGLE LITHO PRINT CO., INC.
92 124
M 258-01

FORM NO. ENG. 15 ED. 11-52

PUB. ROAD DIV. NO.	STATE	TOWN	FED. AID PROJ. NO.	PROJ. NO.	YEAR	ROUTE NO.	SHEET NO.	TOTAL SHEETS
1	CONN.	NEW HAVEN	EACI-91-1(16)2	92-124	1962	I-91	20	57

GRAPHIC SCALE 1/8" = 1'

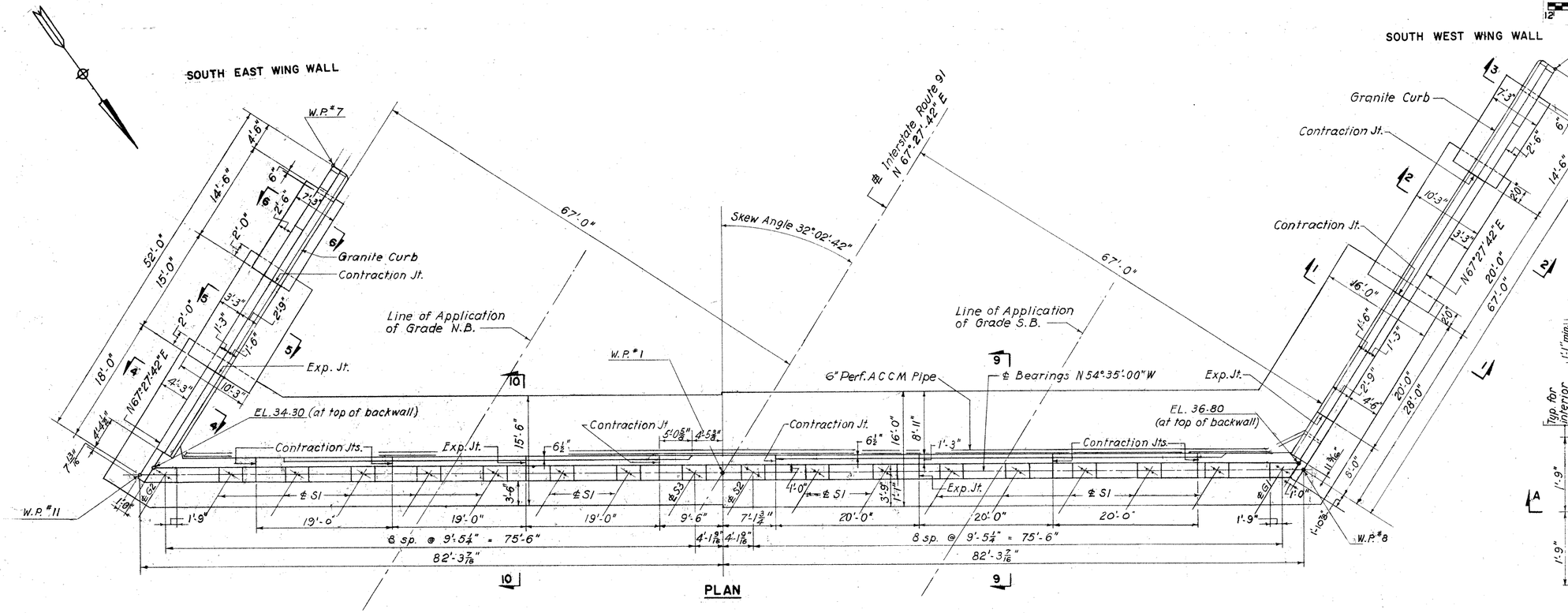

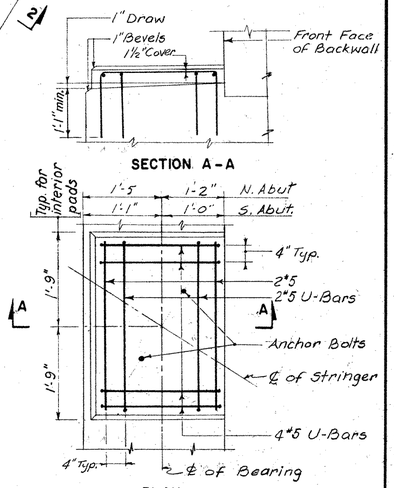

BEARING PAD DETAIL
N.T.S.

See Bearing Details for Anchor Bolt Location.

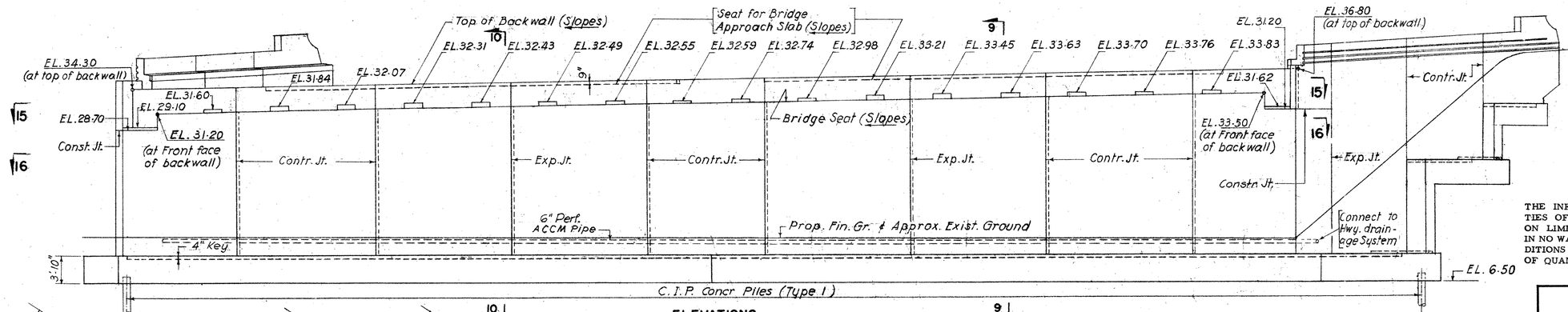

ELEVATIONS

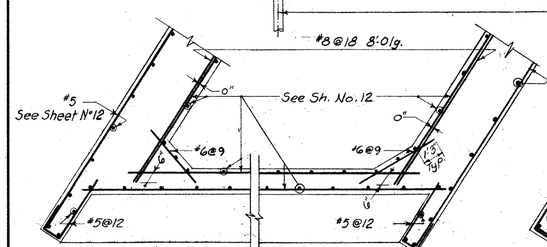

SECTION 15-15
N.T.S.

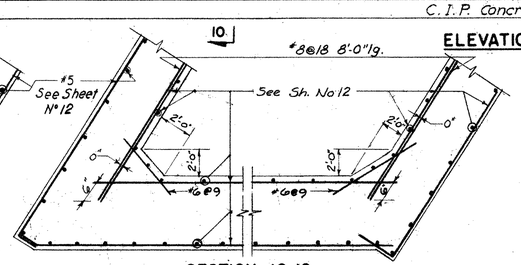

SECTION 16-16
N.T.S.

THE INFORMATION, INCLUDING ESTIMATED QUANTITIES OF WORK, SHOWN ON THESE SHEETS IS BASED ON LIMITED INVESTIGATIONS BY THE STATE AND IS IN NO WAY WARRANTED TO INDICATE THE TRUE CONDITIONS OR ACTUAL QUANTITIES OR DISTRIBUTION OF QUANTITIES OF WORK WHICH WILL BE REQUIRED.

NOTES.
1. "SUBSTRUCTURE NOTES" SHOWN ON SHEET NO. 12 APPLY.
2. SEE SHEET NO. 11 FOR WINGWALL ELEVATIONS.
3. SECTIONS 1-1, 2-2, 3-3, 4-4, 5-5, 6-6, 9-9 AND 10-10 ARE SHOWN ON SHEET NO. 12.
4. FOR DETAILS OF EXPANSION AND CONTRACTION JOINTS SEE SHEET NO. 17.
5. SEE SHEET NO. 7 FOR PILE LAYOUT AND FOOTING REINFORCEMENT.
6. SEE SHEET NO. 12 FOR PAYMENT LIMITS.
7. BRIDGE RAIL NOT SHOWN. SEE SHEET NO. 3 FOR SPACING, SHEET NO. 31 FOR DETAILS.

REVISIONS		
NO.	DATE	DESCRIPTION

CONNECTICUT
STATE HIGHWAY DEPARTMENT
TOWN OF NEW HAVEN
INTERSTATE ROUTE 91
OVER
QUINNIPIAC RIVER
SOUTH ABUTMENT

DESIGNED BY LEONARD S. WEGMAN CO., CONTRACTING ENGINEER
SCALES 1/8" = 1'-0" Except as Noted
MADE BY H.G., W.N.L. DATE 4-24-62
CHECKED BY H.A.E., L.K. DATE 4-24-62
APPROVED [signature] DATE 4-24-62
PROJECT NO. 92-124
BRIDGE SHEET NO. 9 OF 35

92 124

M 2558 001

20

FORM NO. ENG. 15 ED. 11-52

PUB. ROAD DIV. NO.	STATE	TOWN	FED. AID PROJ. NO.	PROJ. NO.	YEAR	ROUTE NO.	SHEET NO.	TOTAL SHEETS
1	CONN.	NEW HAVEN	EACT-91-1(16)2	92-124	1962	I-91	21	57

NOTES
1. "SUBSTRUCTURE NOTES" SHOWN ON SHEET NO. 12 APPLY.
2. SEE SHEET NO. 7 FOR PILE LAYOUT AND FOOTING REINFORCEMENT.
3. SEE SHEET NO. 11 FOR WINGWALL ELEVATIONS.
4. SECTIONS 7-7, 8-8 AND 11-11 ARE SHOWN ON SHEET NO. 12.
5. FOR DETAILS OF EXPANSION AND CONSTRUCTION JOINTS SEE SHEET NO. 17.
6. SEE SHEET NO. 12 FOR PAYMENT LIMITS.
7. BRIDGE RAIL NOT SHOWN. SEE SHEET NO. 3 FOR SPACING, SHEET NO. 33 FOR DETAILS.

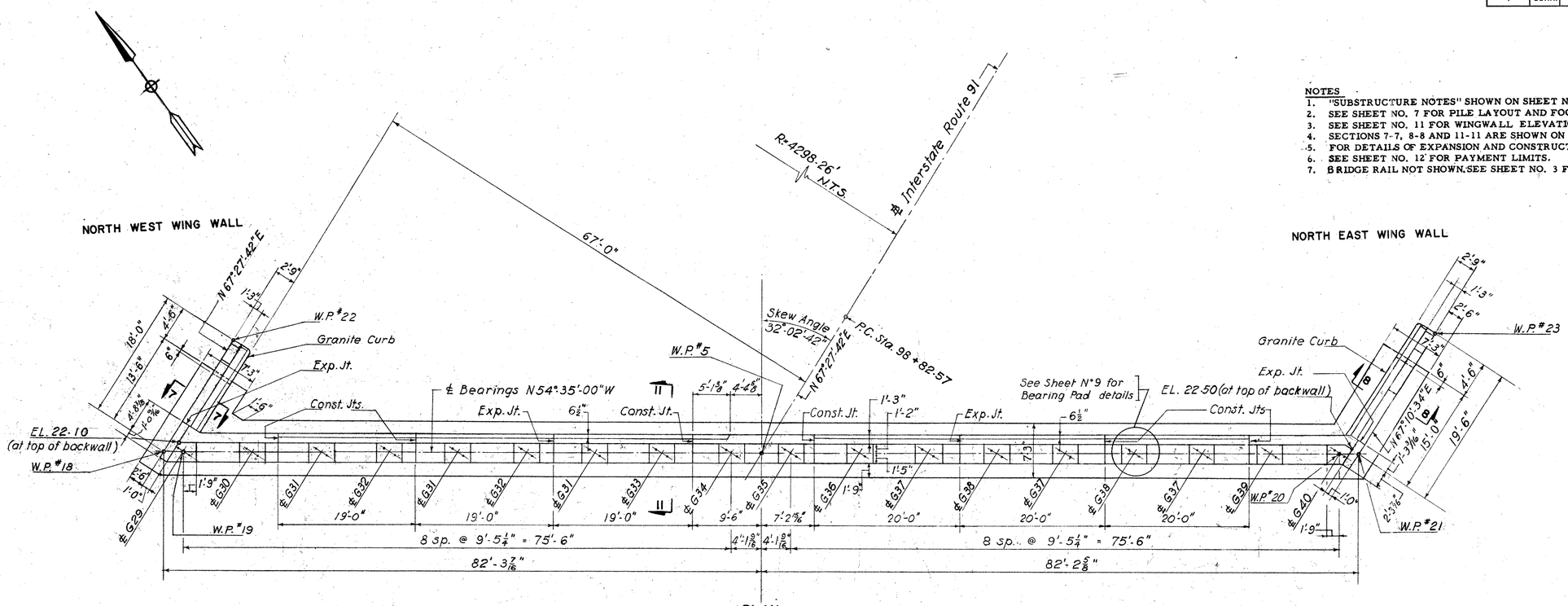

PLAN
SCALE: 1/8" = 1'-0"
GRAPHIC SCALE 1/8" = 1'

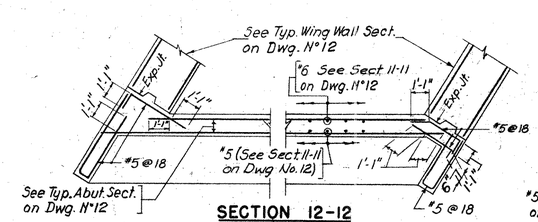

SECTION 12-12
N.T.S.

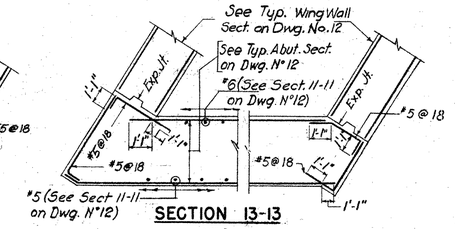

SECTION 13-13
N.T.S.

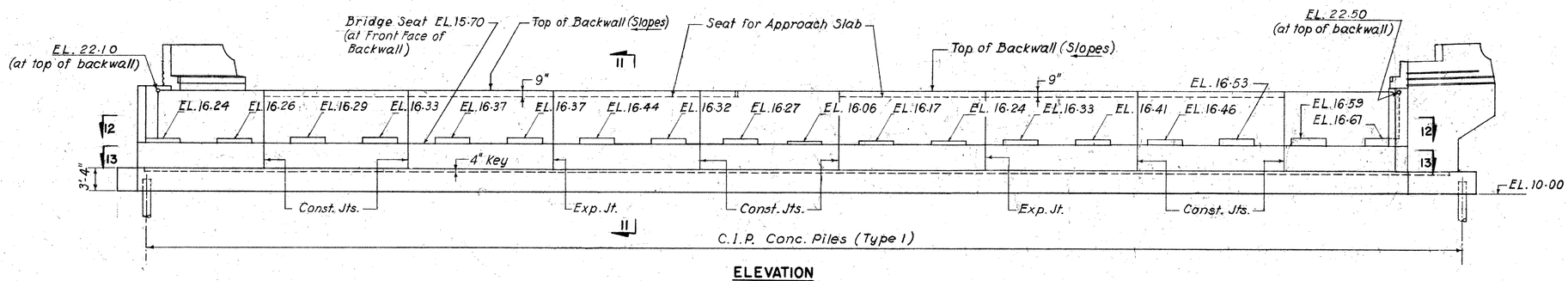

ELEVATION
SCALE: 1/8" = 1'-0"
GRAPHIC SCALE 1/8" = 1'

THE INFORMATION, INCLUDING ESTIMATED QUANTITIES OF WORK, SHOWN ON THESE SHEETS IS BASED ON LIMITED INVESTIGATIONS BY THE STATE AND IS IN NO WAY WARRANTED TO INDICATE THE TRUE CONDITIONS OR ACTUAL QUANTITIES OR DISTRIBUTION OF QUANTITIES OF WORK WHICH WILL BE REQUIRED.

CONNECTICUT
STATE HIGHWAY DEPARTMENT
TOWN OF NEW HAVEN
INTERSTATE ROUTE 91
OVER
QUINNIPIAC RIVER
NORTH ABUTMENT

REVISIONS		
NO.	DATE	DESCRIPTION

DESIGNED BY LEONARD S. WEGMAN CO., CONTRACTING ENGINEER
SCALES AS NOTED
MADE BY H.G., W.N.L. DATE 4-24-62
CHECKED BY H.A.E., L.K. DATE 4-24-62
APPROVED [signature] DATE 4-24-62
PROJECT NO. 92-124
BRIDGE SHEET NO. 10 OF 35

992 1124
M258 01
21

FORM NO. ENG. 18 ED. 11-52

PUB. ROAD DIV. NO.	STATE	TOWN	FED. AID PROJ. NO.	PROJ. NO.	YEAR	ROUTE NO.	SHEET NO	TOTAL SHEETS
1	CONN.	NEW HAVEN	EACI-91-1(16)2	92-124	1962	I-91	22	57

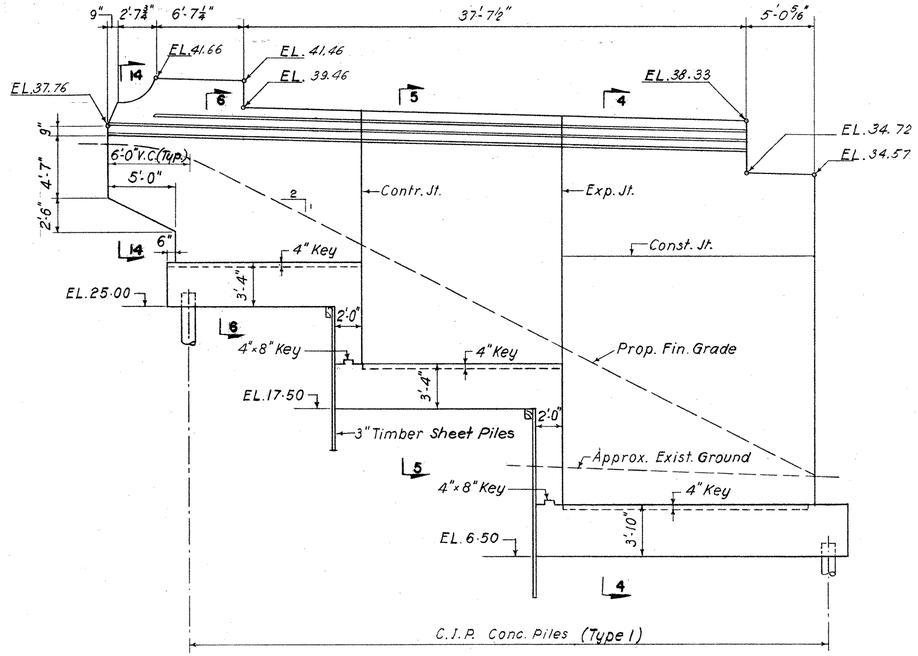

ELEVATION OF SOUTHEAST WINGWALL

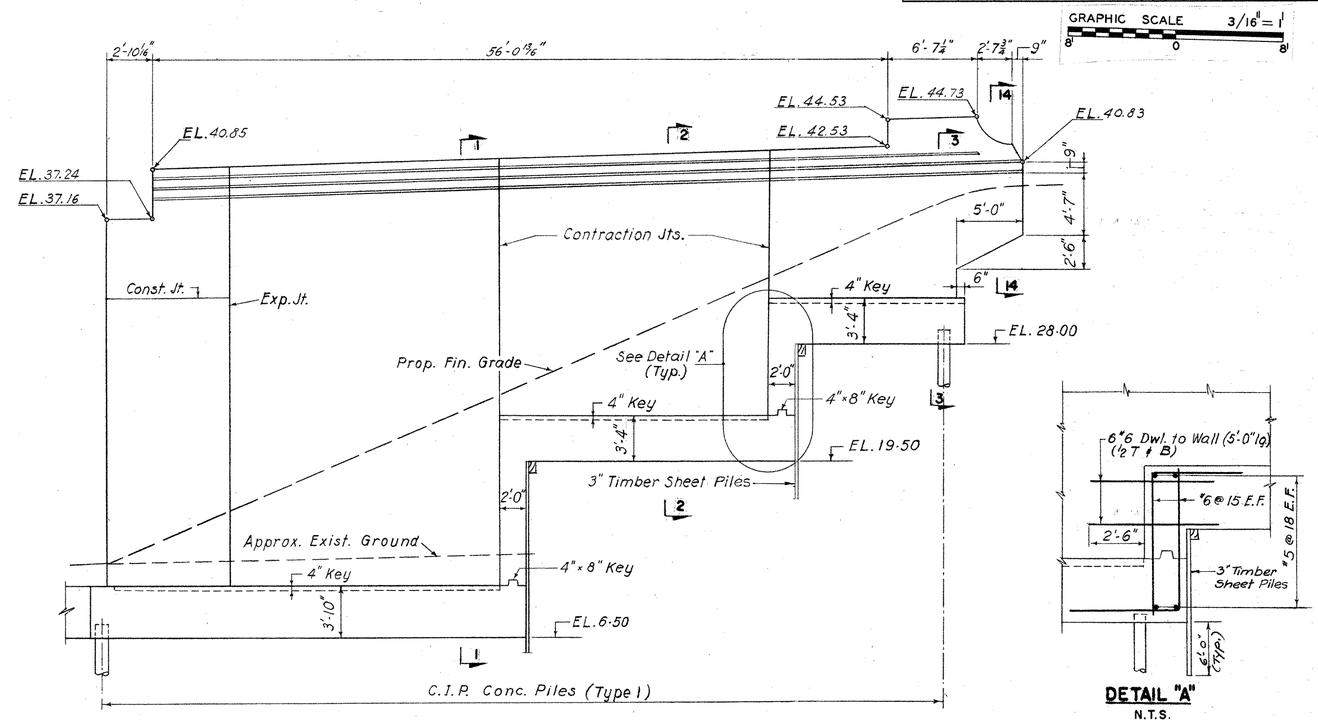

ELEVATION OF SOUTHWEST WINGWALL

DETAIL "A"

N.T.S.

See Sections shown on Sheet N°12 for additional Reinforcement.

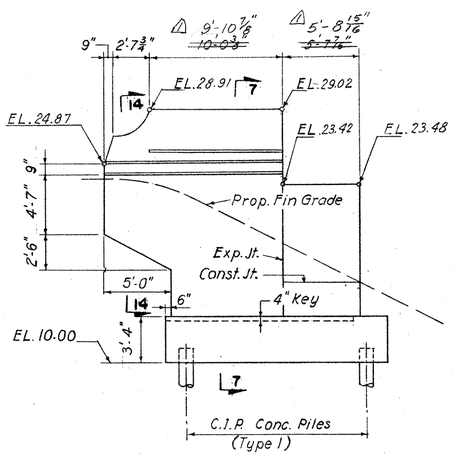

ELEVATION OF NORTHWEST WINGWALL

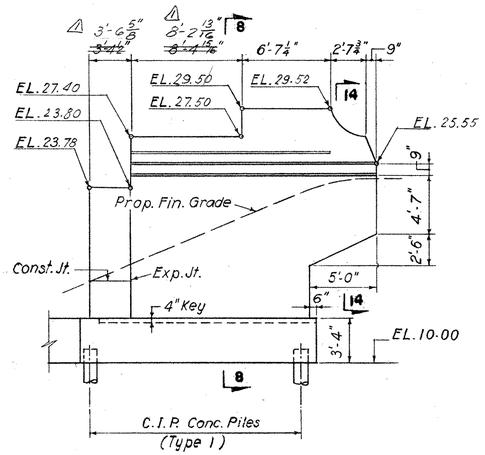

ELEVATION OF NORTHEAST WINGWALL

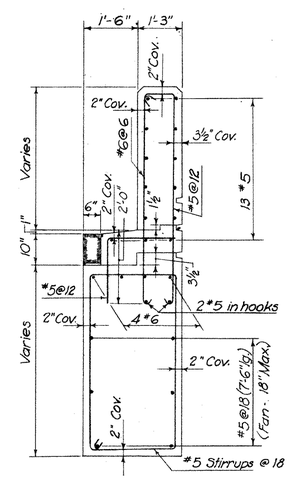

SECTION 14 14

SCALE: ½" = 1'-0"

GRAPHIC SCALE 1/2" = 1'

NOTES

1. "SUBSTRUCTURE NOTES" SHOWN ON SHEET NO. 12 APPLY
2. SEE SHEET NO. 7 FOR PILE LAYOUT AND FOOTING REINFORCEMENT
3. SECTIONS 1-1, 2-2, 3-3, 4-4, 5-5, 6-6, 7-7 AND 8-8 ARE SHOWN ON SHEET NO. 12
4. SEE SHEET NO. 17 FOR DETAILS OF EXPANSION, CONTRACTION AND CONSTRUCTION JOINTS.
5. SEE SHEET NO. 12 FOR PAYMENT LIMITS.
6. BRIDGE RAIL NOT SHOWN. SEE SHEET NO. 3 FOR SPACING, SHEET NO. 33 FOR DETAILS
7. SEE SHEET NO. 17 FOR PYLON DETAILS

REVISIONS		
NO.	DATE	DESCRIPTION
1	2/21/62	dimensions

CONNECTICUT
STATE HIGHWAY DEPARTMENT

TOWN OF NEW HAVEN
INTERSTATE ROUTE 91
OVER
QUINNIPIAC RIVER

ABUTMENT DETAILS I

DESIGNED BY LEONARD S. WEGMAN CO., CONTRACTING ENGINEER

SCALES 3/16" = 1'-0" EXCEPT AS NOTED

MADE BY H.G., W.N.L. DATE 4-26-62

CHECKED BY H.A.E., L.K. DATE 4-26-62

APPROVED [signature] DATE 4-26-62

PROJECT NO. 92-124

BRIDGE SHEET NO. 11 OF 35

FORM NO. ENG. 15 ED. 11-62

PUB. ROAD DIV. NO.	STATE	TOWN	FED. AID PROJ. NO.	PROJ. NO.	YEAR	ROUTE NO.	SHEET NO.	TOTAL SHEETS
1	CONN.	NEW HAVEN	FASCP-91 (16) E	92-124	1962	I-91	23	57

SUBSTRUCTURE NOTES

1. FOR DETAILS OF ANCHOR BOLTS AND BEARINGS SEE SHEET NO. 30. THE 6" W.I. PIPES FOR BEARINGS MARK FS1 TO BE FILLED WITH SAND BEFORE BEARING PADS ARE POURED. SAND TO BE REMOVED AND PIPES FILLED WITH GROUT WHEN BEARINGS ARE INSTALLED.
2. THE BEARING PAD ELEVATIONS SHOWN ON ELEVATIONS OF PIERS AND ABUTMENTS ARE THE ELEVATIONS OF THE BOTTOM OF BASE PLATES.
3. COST OF FURNISHING AND PLACING CAULKING COMPOUND FOR JOINT FILLERS TO BE INCLUDED IN THE ITEMS FOR JOINT FILLERS FOR BRIDGES.
4. UNLESS OTHERWISE NOTED, SPLICES SHALL BE 20 BAR DIAMETERS.
5. DETAILS OF EXPANSION, CONTRACTION AND CONSTRUCTION JOINTS FOR ABUTMENTS AND WINGWALLS ARE SHOWN ON SHEET 17.
6. LONGITUDINAL BARS IN TOP OF HEEL SHALL BE SPLICED 30 BAR DIAMETERS.

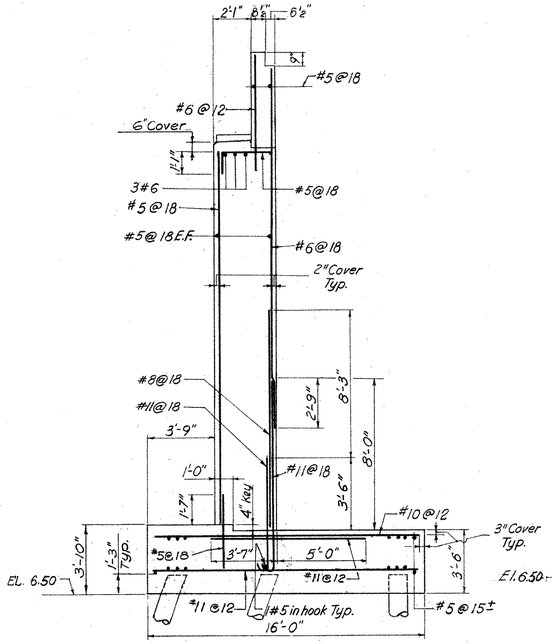

SECTION 9-9

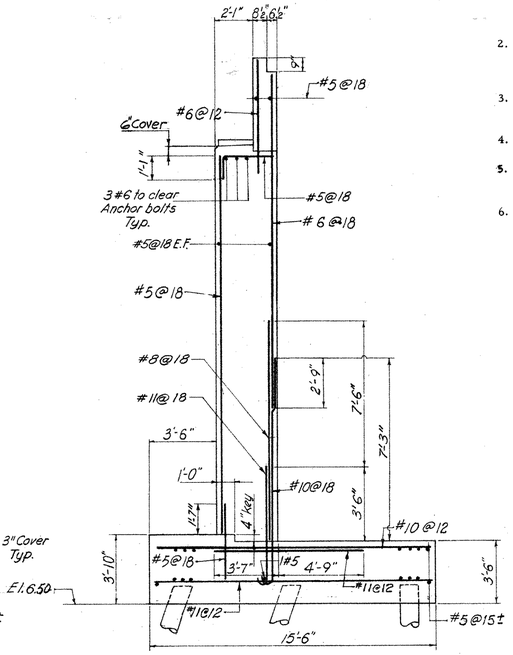

SECTION 10-10

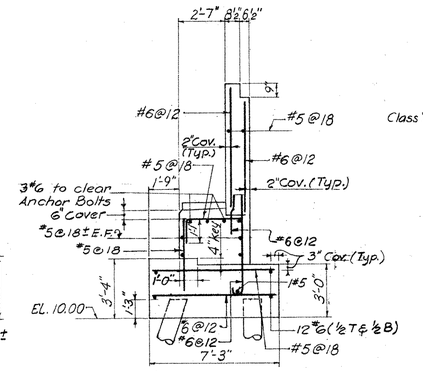

SECTION 11-11

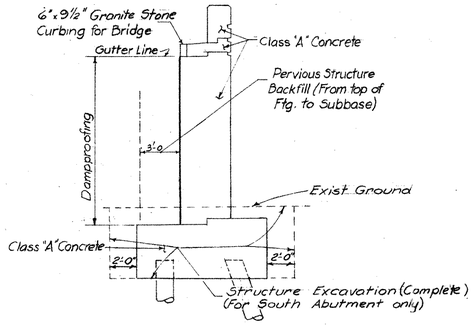

PAYMENT LIMITS FOR WINGWALLS

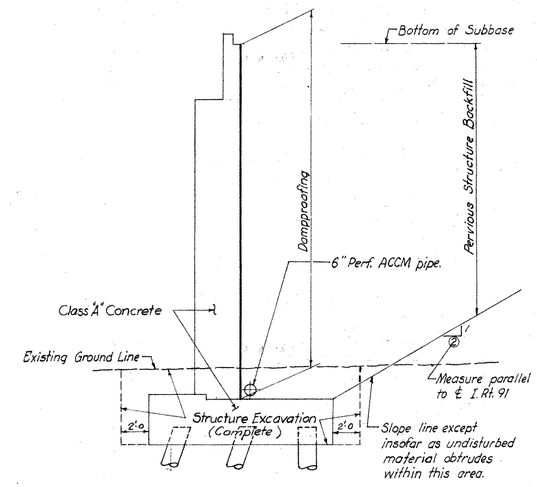

PAYMENT LIMITS FOR SOUTH ABUTMENT

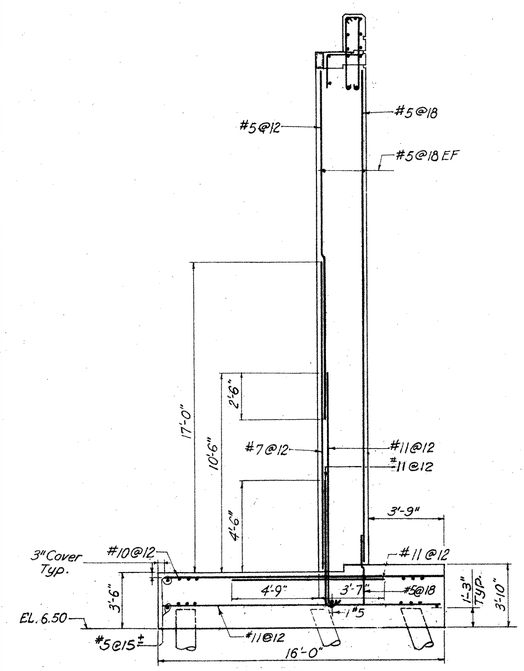

SECTION 1-1

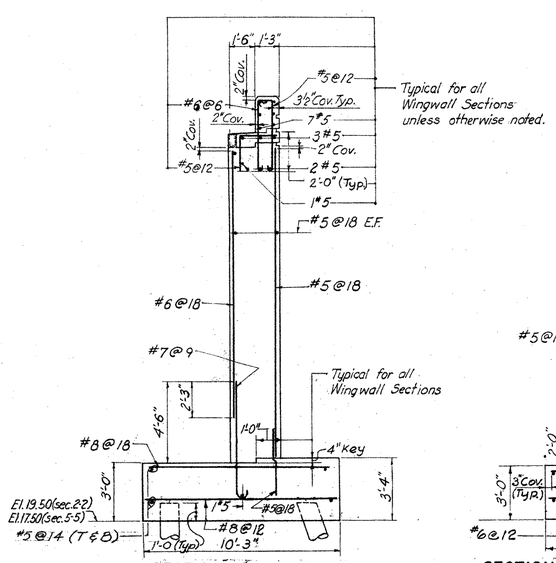

Typical for all Wingwall Sections unless otherwise noted.

SECTIONS 2-2 & 5-5

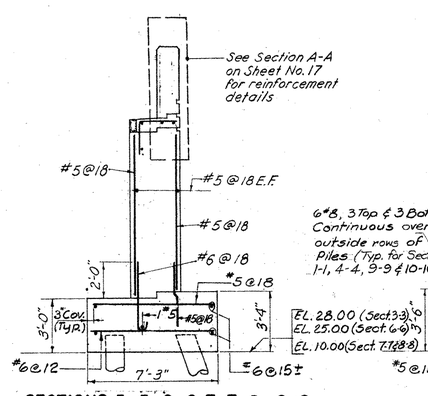

SECTIONS 3-3, 6-6, 7-7 & 8-8

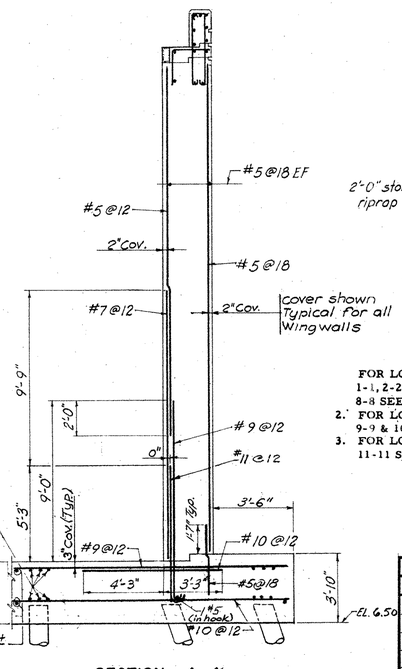

SECTION 4-4

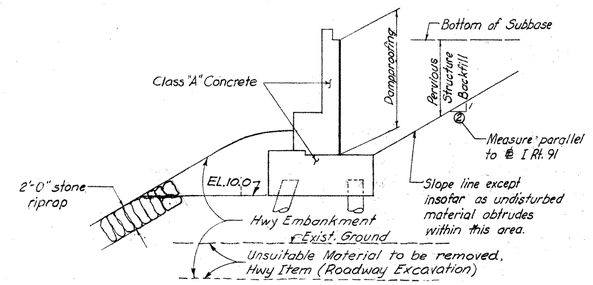

PAYMENT LIMITS FOR NORTH ABUTMENT

FOR LOCATION OF SECTIONS 1-1, 2-2, 3-3, 4-4, 5-5, 6-6, 7-7 & 8-8 SEE SHEET NO. 11.
2. FOR LOCATION OF SECTIONS 9-9 & 10-10 SEE SHEET NO. 9
3. FOR LOCATION OF SECTION 11-11 SEE SHEET NO. 10

REVISIONS		
NO.	DATE	DESCRIPTION

CONNECTICUT
STATE HIGHWAY DEPARTMENT

TOWN OF NEW HAVEN
INTERSTATE ROUTE 91
OVER
QUINNIPIAC RIVER

ABUTMENT DETAILS II

DESIGNED BY LEONARD S. WEGMAN CO., CONTRACTING ENGINEER
SCALES NO SCALE
MADE BY H.A.E., W.N.L. DATE 4-24-62
CHECKED BY L.P., L.K. DATE 4-24-62
APPROVED [signature] DATE 4-24-62
PROJECT NO. 92-124
BRIDGE SHEET NO. 12 OF 35

FORM NO. ENG. 15 ED. 11-52

PUB. ROAD DIV. NO.	STATE	TOWN	FED. AID PROJ. NO.	PROJ. NO.	YEAR	ROUTE NO.	SHEET NO.	TOTAL SHEETS
1	CONN.	NEW HAVEN	EACI-91-1(68)2	92-124	1962	I-91	24	57

THE INFORMATION, INCLUDING ESTIMATED QUANTITIES OF WORK, SHOWN ON THESE SHEETS IS BASED ON LIMITED INVESTIGATIONS BY THE STATE AND IS IN NO WAY WARRANTED TO INDICATE THE TRUE CONDITIONS OR ACTUAL QUANTITIES OR DISTRIBUTION OF QUANTITIES OF WORK WHICH WILL BE REQUIRED.

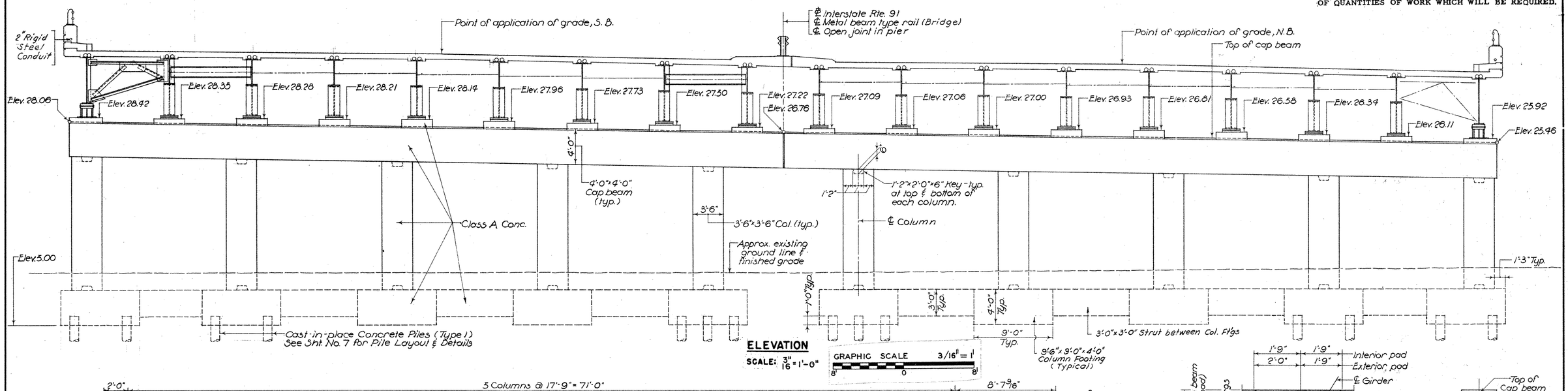

ELEVATION

SCALE: 3/16" = 1'-0"

GRAPHIC SCALE 3/16" = 1'

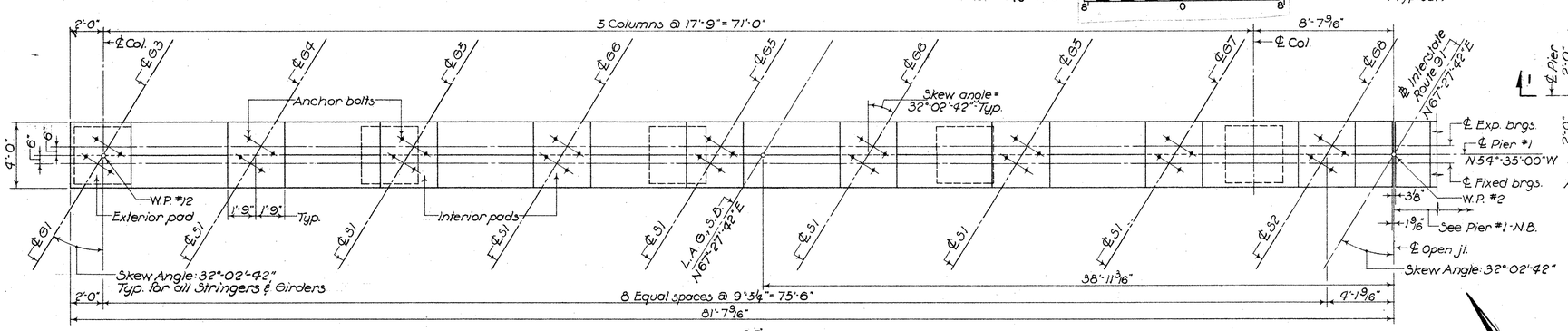

S.B

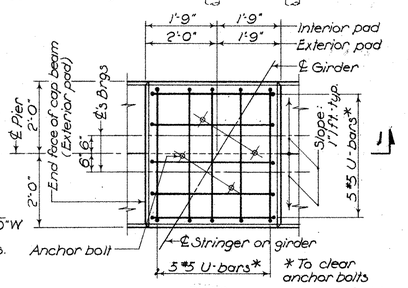

PLAN

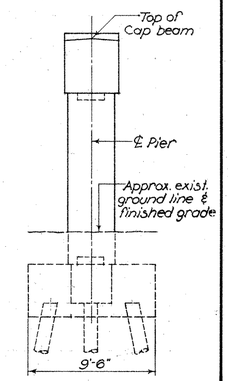

END ELEVATION

SCALE: 3/16" = 1'-0"

GRAPHIC SCALE 3/16" = 1'

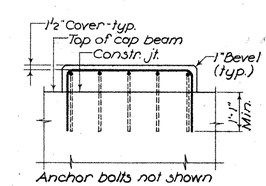

SECTION 1-1

BEARING PEDESTAL DETAILS

SCALE: 1/2" = 1'-0"

GRAPHIC SCALE 1/2" = 1'

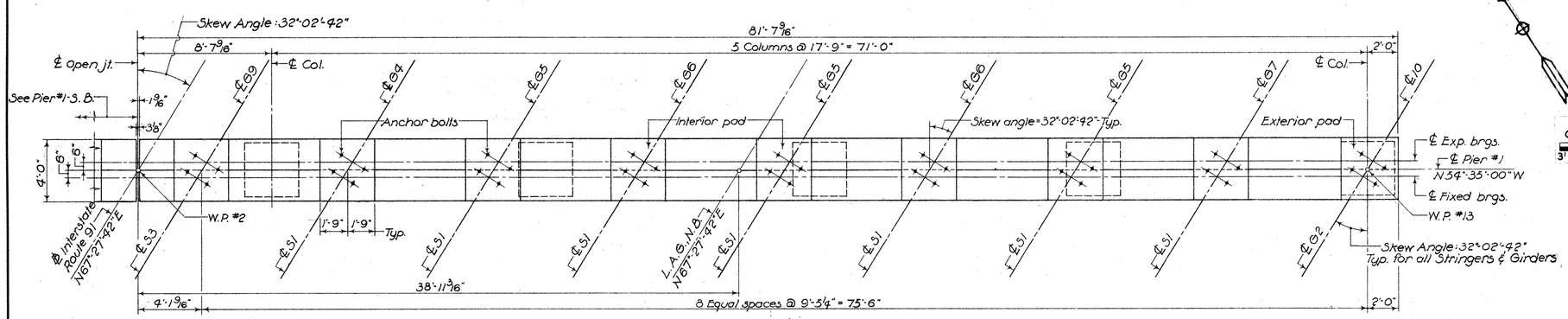

N.B.

PLAN

SCALE: 1/4" = 1'-0"

GRAPHIC SCALE 1/4" = 1'

L.A.G. = Line of application of grade

SEE SHEET NO. 12 FOR SUBSTRUCTURE NOTES.

REVISIONS		
NO.	DATE	DESCRIPTION

CONNECTICUT
STATE HIGHWAY DEPARTMENT

TOWN OF NEW HAVEN
INTERSTATE ROUTE 91
OVER
QUINNIPIAC RIVER

PIER #1

DESIGNED BY LEONARD S. WEGMAN CO., CONTRACTING ENGINEER

SCALES AS NOTED

MADE BY H.L., W.N.L. DATE 4-24-62

CHECKED BY L.P., L.K. DATE 4-24-62

APPROVED [signature] DATE 4-24-62

PROJECT NO. 92-124

BRIDGE SHEET NO. 13 OF 35

92-124

M258 01

FORM NO. ENG. 15 ED. 11-52

PUB. ROAD DIV. NO.	STATE	TOWN	FED. AID PROJ. NO.	PROJ. NO.	YEAR	ROUTE NO.	SHEET NO.	TOTAL SHEETS
1	CONN.	NEW HAVEN	EACT-91-1(16)2	92-124	1962	I-91	25	57

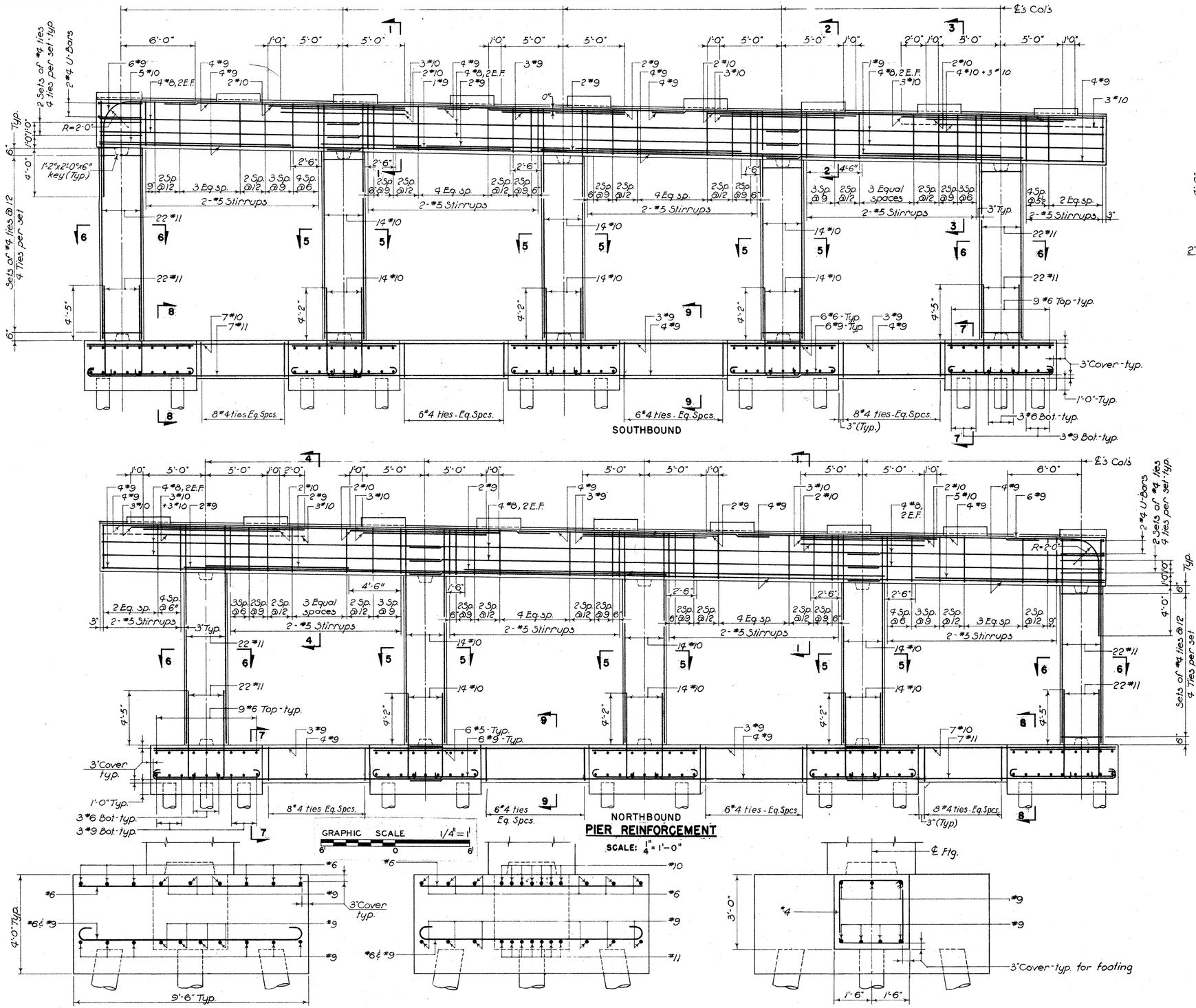

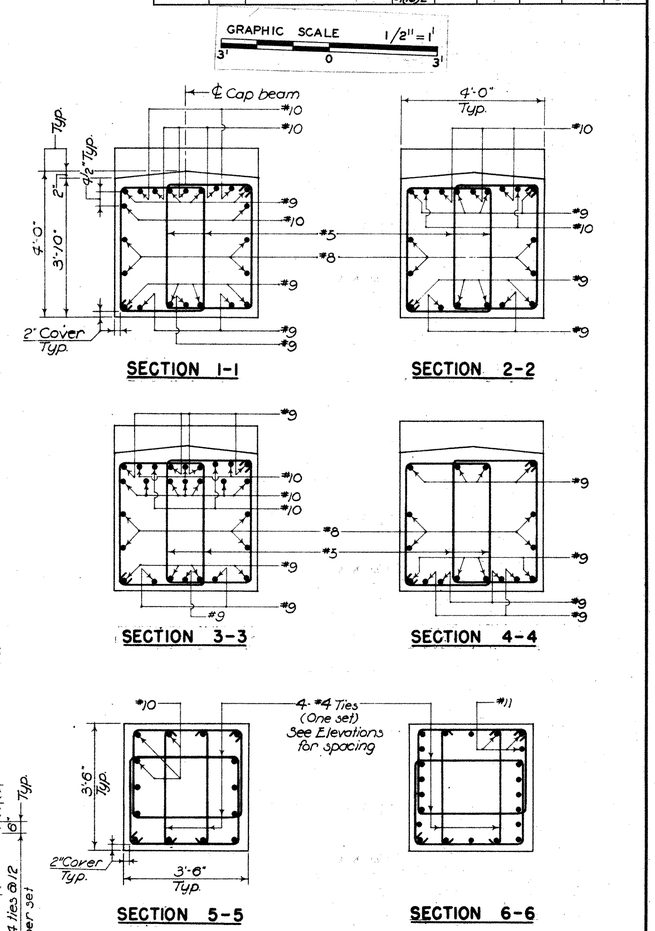

NOTES:

1. SEE SHEET NO. 12 FOR SUBSTRUCTURE NOTES.
2. PIER REINFORCEMENT TO BE PLACED TO CLEAR ANCHOR BOLTS. CAP BEAM AND FOOTING REINFORCEMENT TO BE PLACED TO CLEAR VERTICAL COLUMN REINFORCEMENT?
3. FOR THE SIZE OF KEYS AT TOP AND BOTTOM OF COLUMNS SEE ELEVATION OF PIER #1 ON SHEET NO 13.
4. SEE SHEET NO. 13 FOR BEARING PAD REINFORCEMENT.

CONNECTICUT
STATE HIGHWAY DEPARTMENT

TOWN OF NEW HAVEN INTERSTATE ROUTE 91 OVER QUINNIPIAC RIVER DETAILS FOR PIER #1

REVISIONS		
NO.	DATE	DESCRIPTION

DESIGNED BY LEONARD S. WEGMAN CO., CONTRACTING ENGINEER

SCALES 1/2" = 1'-0" EXCEPT AS NOTED

MADE BY H.L., W.N.L. DATE 4-24-62

CHECKED BY L.P., L.K. DATE 4-24-62

APPROVED [signature] DATE 4-24-62

PROJECT NO. 92-124

BRIDGE SHEET NO. 14 OF 35

92 124

M 25

25

FORM NO. ENG. 15 ED. 11-52

PUB. ROAD DIV. NO.	STATE	TOWN	FED. AID PROJ. NO.	PROJ. NO.	YEAR	ROUTE NO.	SHEET NO.	TOTAL SHEETS
1	CONN.	NEW HAVEN	EACT-91-1(162)	92-124	1962	I-91	26	57

*: Cost of this and any other required bracing to be included in the unit price for sheet piles. (See Sheet Pile Payment Note.)

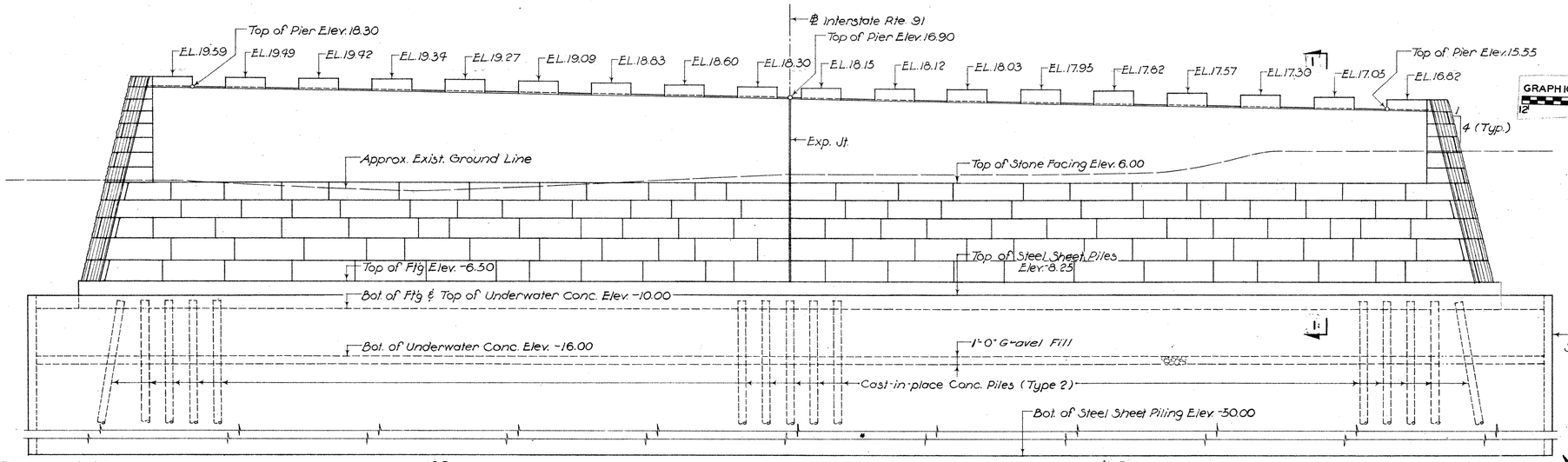

ELEVATION

Ties, Wales, Conc. Encasement & Rip Rap not shown

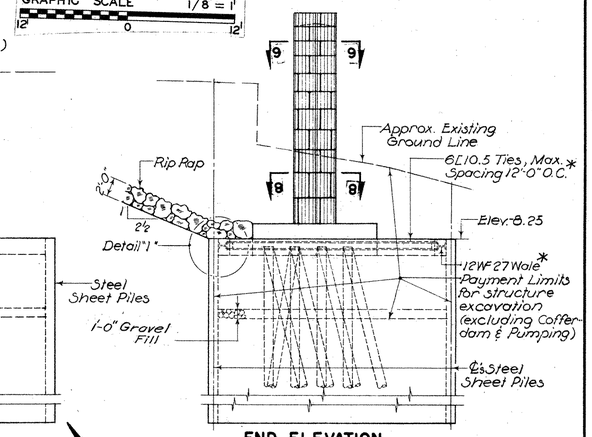

END ELEVATION

Sheet Pile Payment Note:
Steel Sheet piles left in place will be measured for payment at the rate of 27 lbs per sq. ft. Min. Size ZP-27, MZ-27 or equivalent to have a min. section modulus of 30.2 in.³ (To remain in place)

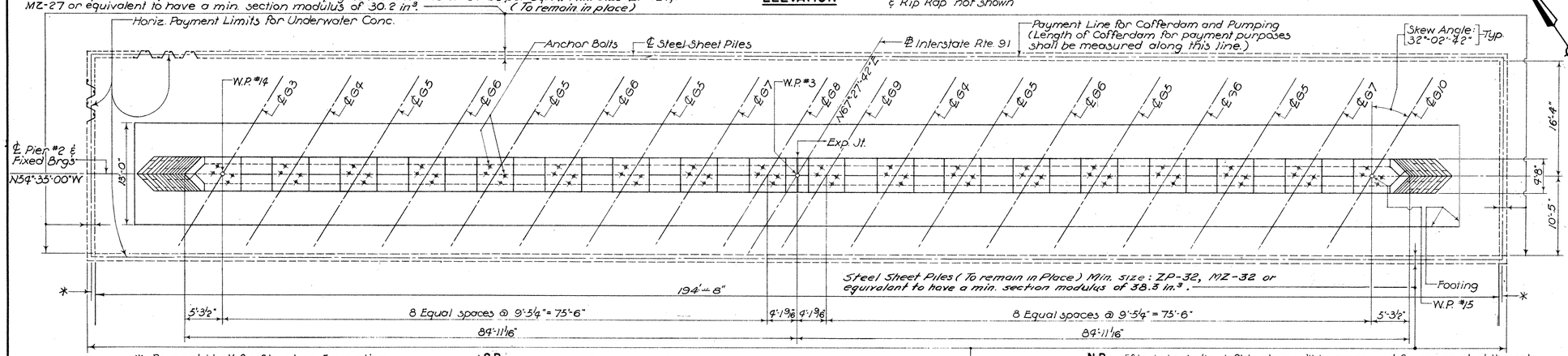

*: Payment Limit for Structure Excavation (Excluding Cofferdam & Pumping)

S.B.

Ties, Wales, Concrete Encasement & Rip Rap not shown

PLAN

N.B. Sheet Pile Payment Note: Steel sheet piles left in place will be measured for payment at the rate of 32 lbs per sq. ft.

FOR COFFERDAM DESIGN NOTE SEE SHEET NO. 16

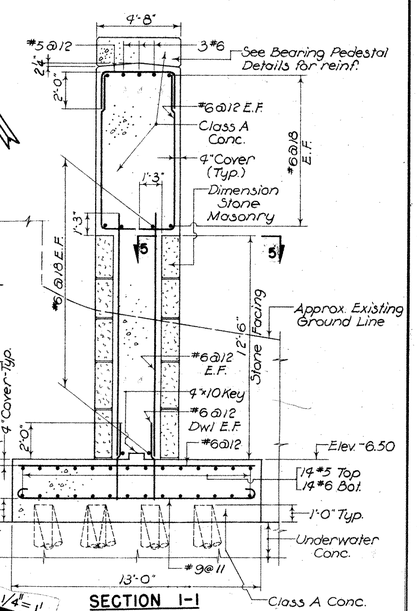

SECTION 1-1

SCALE: 1/4" = 1'-0"

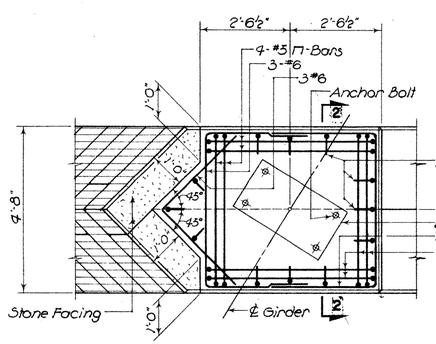

EXTERIOR PAD

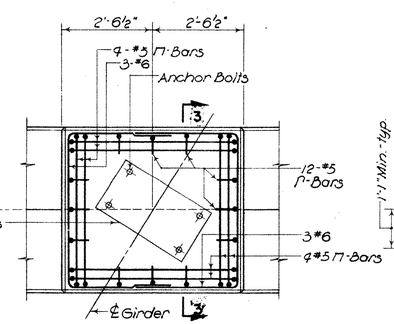

INTERIOR PAD

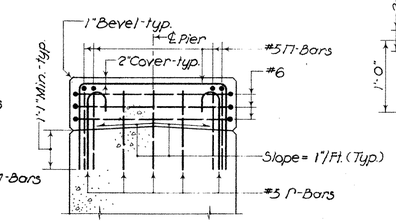

Anchor Bolts not shown

SECTIONS 2-2 & 3-3

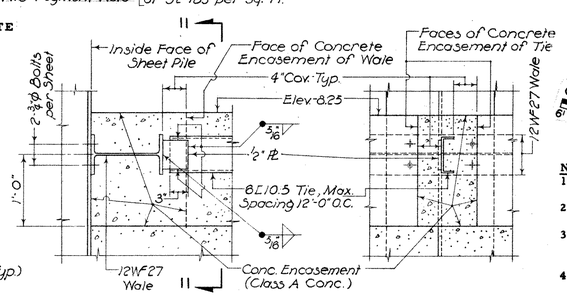

DETAIL "1"

SCALE: 1" = 1'-0"

SECTION 11-11

SCALE: 1" = 1'-0"

GRAPHIC SCALE 1/4" = 1'
6'
0
6'

GRAPHIC SCALE 1" = 1'
2'
0
2'

GRAPHIC SCALE 1/2" = 1'
3'
0
3'

TYPICAL BEARING PEDESTAL DETAILS FOR PIERS #2 & #3

SCALE: 1/2" = 1'-0"

NOTES

1. SEE SHEET NO. 12 FOR SUBSTRUCTURE NOTES.
2. SEE SHEET NO. 8 FOR PILE LAYOUT AND DETAILS
3. SECTIONS 5-5, 8-8, 9-9 AND 10-10 ARE SHOWN ON SHEET NO. 16.
4. SEE SHEET NO. 16 FOR STONE FACING AND EXPANSION JOINT DETAILS.

THE INFORMATION, INCLUDING ESTIMATED QUANTITIES OF WORK, SHOWN ON THESE SHEETS IS BASED ON LIMITED INVESTIGATIONS BY THE STATE AND IS IN NO WAY WARRANTED TO INDICATE THE TRUE CONDITIONS OR ACTUAL QUANTITIES OR DISTRIBUTION OF QUANTITIES OF WORK WHICH WILL BE REQUIRED.

REVISIONS		
NO.	DATE	DESCRIPTION

CONNECTICUT
STATE HIGHWAY DEPARTMENT

TOWN OF NEW HAVEN
INTERSTATE ROUTE 91 OVER QUINNIPIAC RIVER
PIER #2

DESIGNED BY LEONARD S. WEGMAN CO., CONTRACTING ENGINEER
SCALES 1/8" = 1'-0" EXCEPT AS NOTED
MADE BY H.L., L.P. DATE 6-22-62
CHECKED BY L.K. DATE 6-28-62
APPROVED [signature] DATE 6-29-62

PROJECT NO. 92-124
BRIDGE SHEET NO. 15 OF 35

OGILVIE PRESS, INC., BROOKLYN 17, N. Y. REPROVEL NO. 400M

FORM NO. ENG. 19 ED. 11-52

PUB. ROAD DIV. NO.	STATE	TOWN	FED. AID PROJ. NO.	PROJ. NO.	YEAR	ROUTE NO.	SHEET NO.	TOTAL SHEETS
1	CONN.	NEW HAVEN	IRC(F-91)-1(106)2	92-124	1962	I-91	27	57

*: Cost of this & any other required bracing to be included in the unit price for sheet piles. (See Sheet Pile Payment Note)

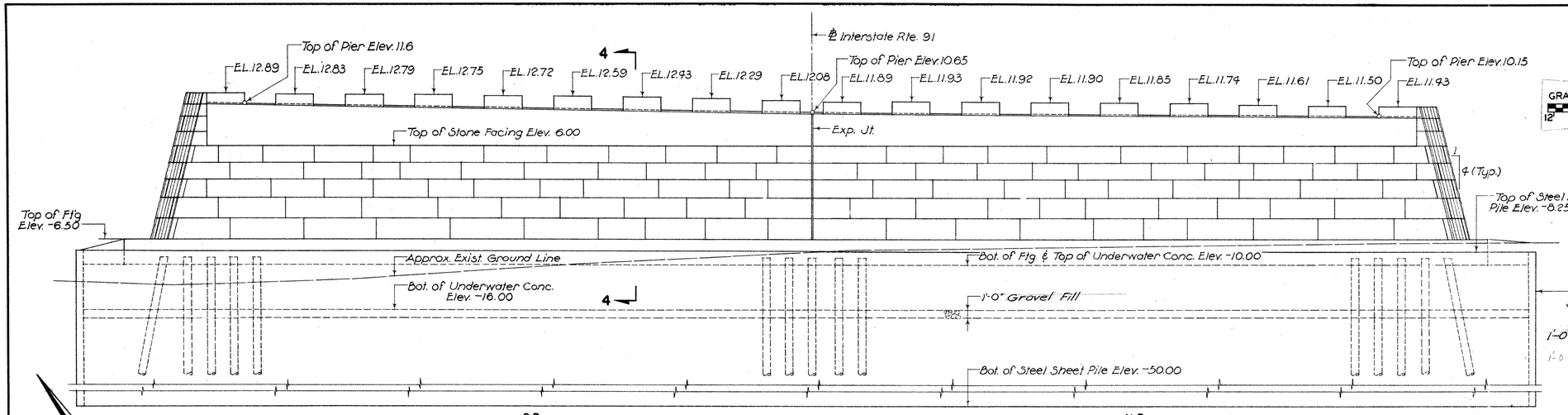

ELEVATIONS Ties, Wales & Concrete Encasement not shown

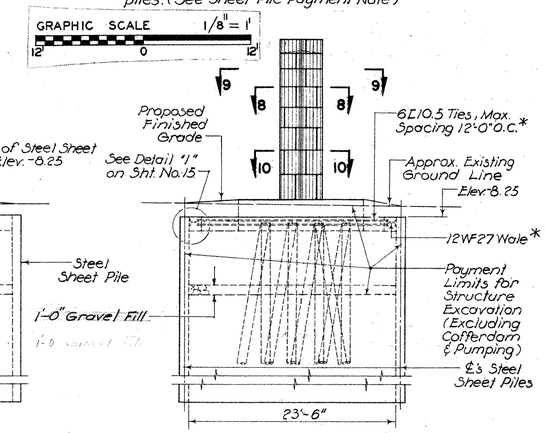

END ELEVATION

Steel Sheet Piles (To remain in place) Min. size: ZP-27, MZ-27 or equivalent to have a min. section modulus of 30.2 in.³

Sheet Pile Payment Note: Steel sheet piles left in place will be measured for payment at the rate of 27 lbs per sq. ft.

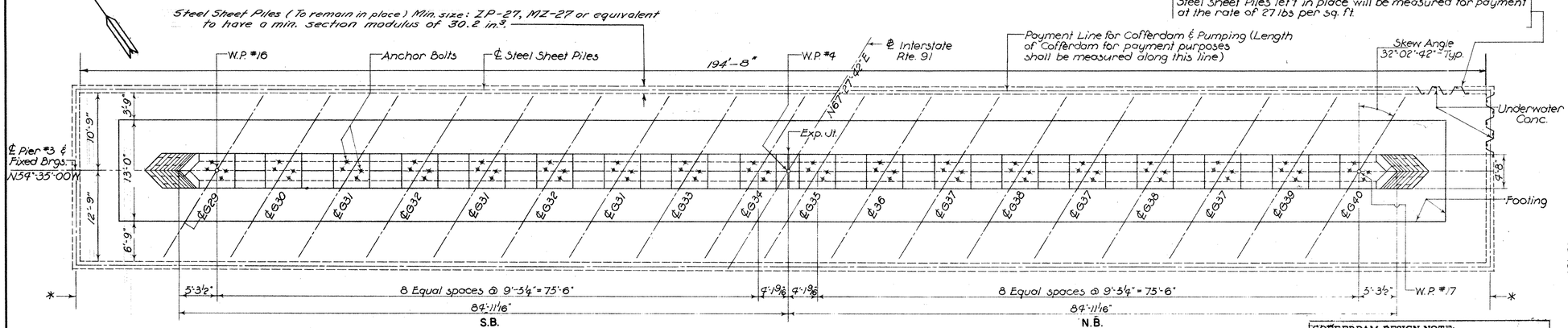

PLAN *: Payment Limit for Structure Excavation (Excluding Cofferdam & Pumping)

Ties, Wales & Concrete Encasement not shown

COFFERDAM DESIGN NOTE:
THE THICKNESS OF THE UNDERWATER CONCRETE HAS BEEN DETERMINED BY ASSUMING THE WATER AT ELEVATION + 4.0. IF THE WATER IS AT A HIGHER LEVEL, THE CONTRACTOR IS REQUIRED TO MAKE PROVISIONS FOR COUNTERACTING THE BUOYANCY AT NO ADDITIONAL COST TO THE STATE.

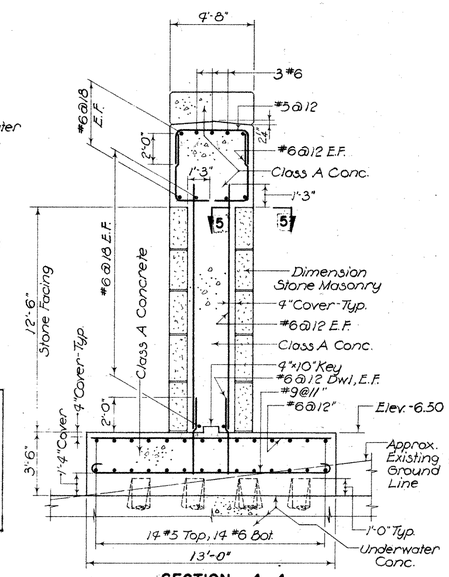

SECTION 4-4
SCALE: 1/4" = 1'-0"

GRAPHIC SCALE 1/4" = 1'

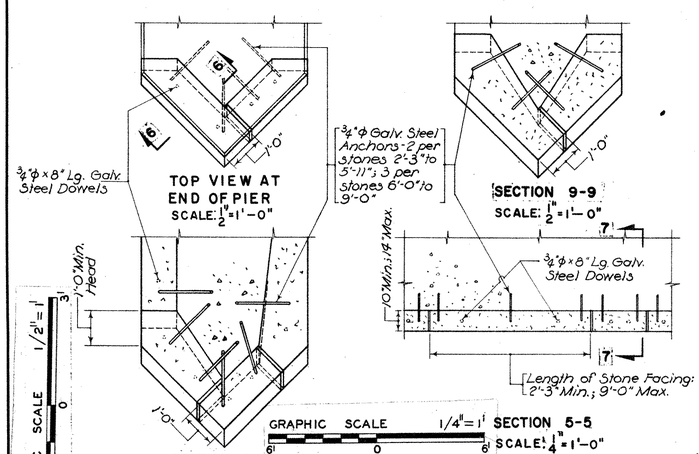

STONE FACING DETAILS
(TYPICAL FOR PIERS #2 & #3)

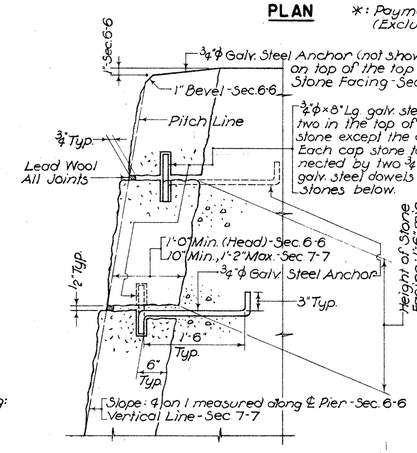

SECTION 6-6
(SECTION 7-7 SIMILAR EXCEPT AS NOTED)
SCALE: 1" = 1'-0"

⚠ Note: Exposed surface of face stone shall be Rock-Face or Quarry-Face

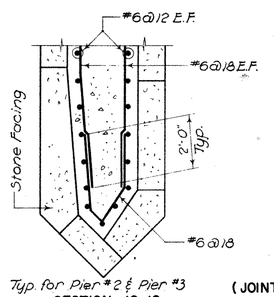

Typ. for Pier #2 & Pier #3
SECTION 10-10
SCALE: 3/8" = 1'-0"
GRAPHIC SCALE 3/8" = 1'

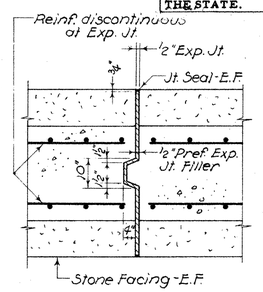

EXPANSION JOINT DETAIL
(JOINT DETAIL FOR PIER # 3 SHOWN, FOR PIER # 2 SIMILAR)
SCALE: 1/2" = 1'-0"
GRAPHIC SCALE 1/2" = 1'

NOTES
1. SEE SHEET NO. 12 FOR SUBSTRUCTURE NOTES.
2. SEE SHEET NO. 8 FOR PILE LAYOUT AND DETAILS.
3. SEE SHEET NO. 15 FOR BEARING PEDESTAL DETAILS
4. DETAIL "1" IS SHOWN ON SHEET NO. 15

REVISIONS		
NO.	DATE	DESCRIPTION
⚠	1/8/62	Added Note

CONNECTICUT
STATE HIGHWAY DEPARTMENT

TOWN OF NEW HAVEN
INTERSTATE ROUTE 91
OVER
QUINNIPIAC RIVER
PIER #3

DESIGNED BY LEONARD S. WEGMAN CO., CONTRACTING ENGINEER
SCALES 1/8" = 1'-0" EXCEPT AS NOTED
MADE BY H.L., L.P. DATE 4-24-62
CHECKED BY L.K. DATE 4-24-62
APPROVED [signature] DATE 4-24-62
PROJECT NO. 92-124
BRIDGE SHEET NO. 16 OF 35

OGILVIE PRESS, INC., BROOKLYN 17, N. Y. REPROYEL NO. 400M

92 124 M 258 01 27

FORM NO. ENG. 18 ED. 11-58

PUB. ROAD DIV. NO.	STATE	TOWN	FED. AID PROJ. NO.	PROJ. NO.	YEAR	ROUTE NO.	SHEET NO.	TOTAL SHEETS
1	CONN.	NEW HAVEN	ERCS-91 (062) E	92-124	1962	I-91	28	57

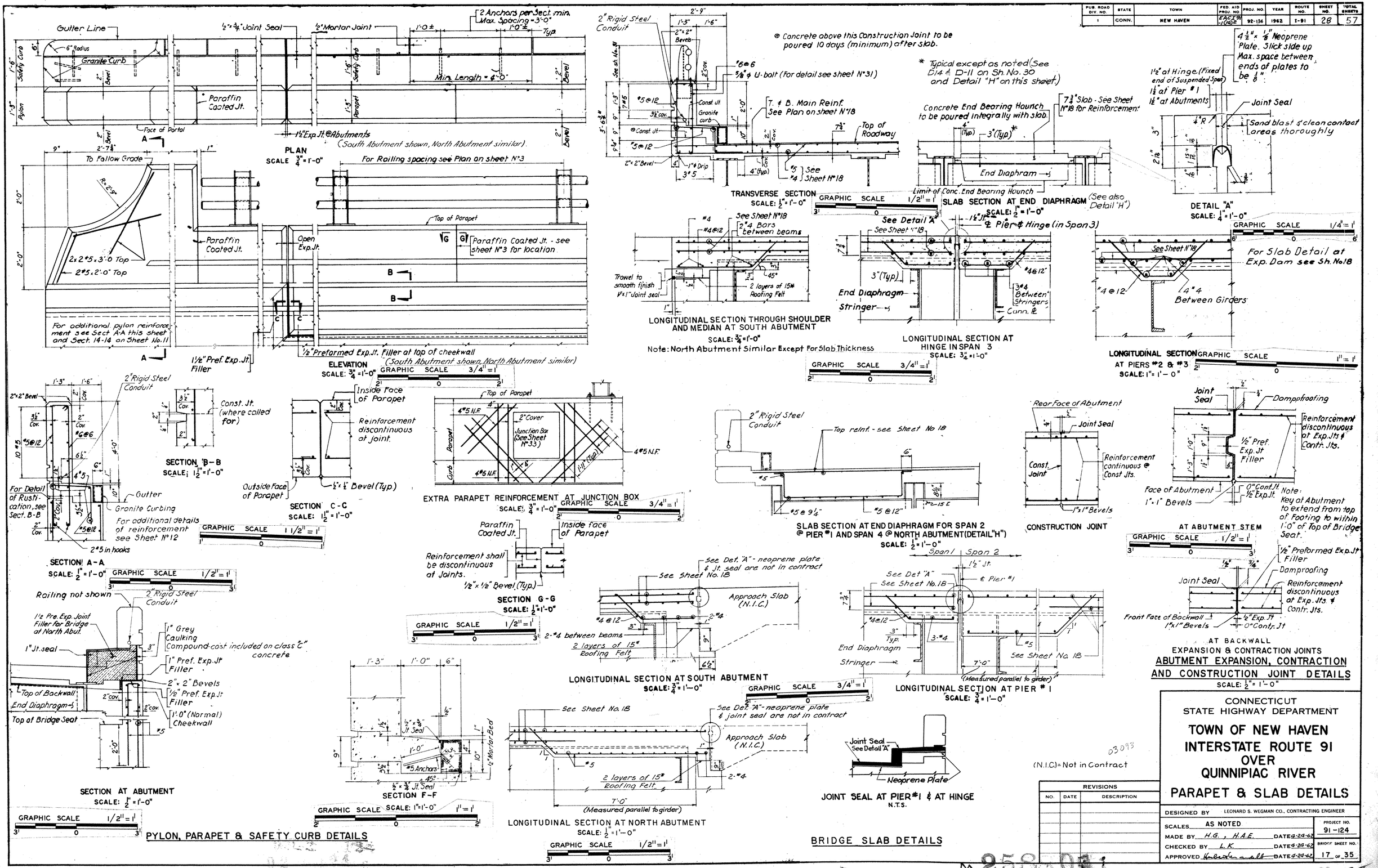

REVISIONS		
NO.	DATE	DESCRIPTION

CONNECTICUT
STATE HIGHWAY DEPARTMENT

TOWN OF NEW HAVEN
INTERSTATE ROUTE 91
OVER
QUINNIPIAC RIVER
PARAPET & SLAB DETAILS

DESIGNED BY LEONARD S. WEGMAN CO., CONTRACTING ENGINEER
SCALES AS NOTED
MADE BY H.G., H.A.E. DATE 9-24-62
CHECKED BY L.K. DATE 9-24-62
APPROVED [signature] DATE 9-24-62
PROJECT NO. 91-124
BRIDGE SHEET NO. 17 OF 35

M 258-071

02 124

28 28

FORM NO. ENG. 18 ED. 11-52

PUB. ROAD DIV. NO.	STATE	TOWN	FED. AID PROJ. NO.	PROJ. NO.	YEAR	ROUTE NO.	SHEET NO.	TOTAL SHEETS
1	CONN.	NEW HAVEN	EACS(9)-1(106)E	92-124	1962	I-91	29	57

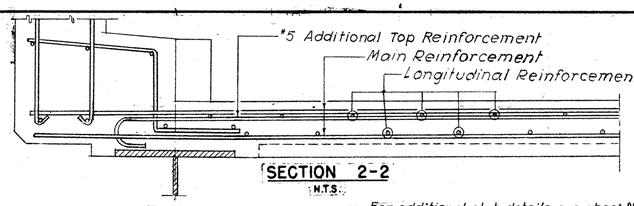

SECTION 2-2
N.T.S.

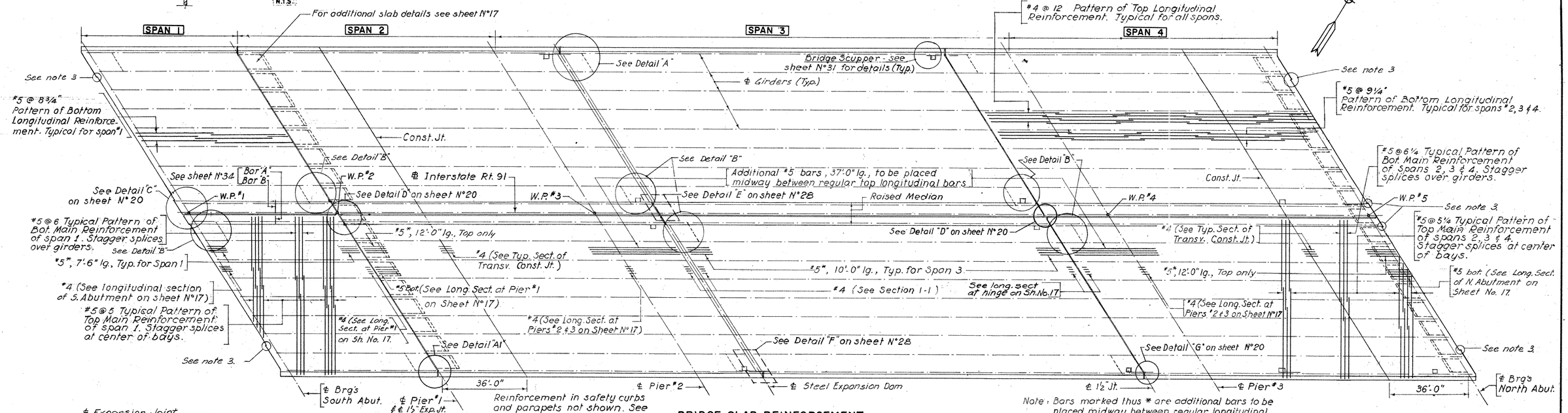

BRIDGE SLAB REINFORCEMENT
SCALE: 1" = 20'-0"

GRAPHIC SCALE 1" = 20' (40' 0 40')

Note: Bars marked thus * are additional bars to be placed midway between regular longitudinal bars, except where otherwise noted.

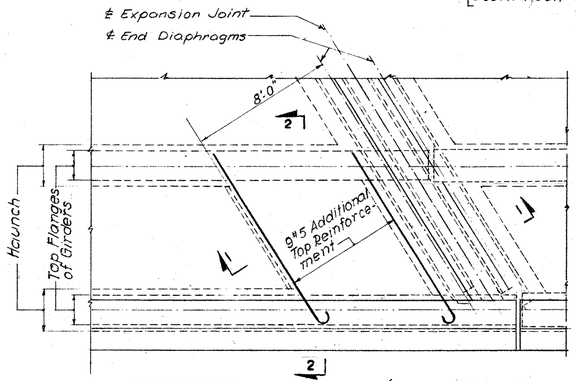

GRAPHIC SCALE 1/4" = 1' (6' 0 6')

DETAIL "A"
SCALE: ¼" = 1'-0"

(Detail "A1" identical except as noted)

Detail "B" similar except as noted

Note to Detail "A" & "A1"

Increase depth of slab to underside of top flange of girders between fascia girder & first interior girder. Additional reinforcement for acute corners at steel expansion dam is shown. Detail at S. Abutment is similar.

Note to Detail "B":
Increase the depth of slab to underside of the top flange of girders between the first & the second girder adjacent to the longitudinal joint within indicated limits.
See plan above for location.

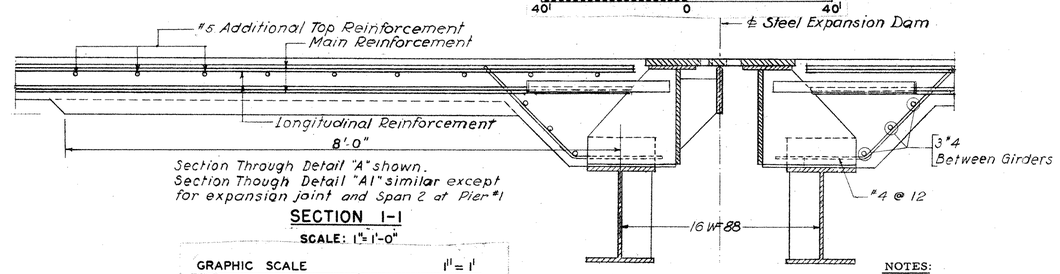

Section Through Detail "A" shown.
Section Though Detail "A1" similar except for expansion joint and Span 2 at Pier #1

SECTION 1-1
SCALE: 1" = 1'-0"

GRAPHIC SCALE 1" = 1' (2' 0 2')

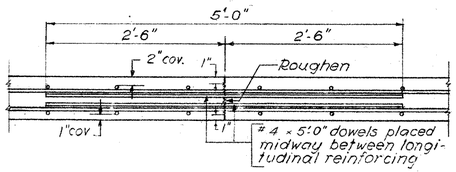

TYPICAL SECTION OF TRANSVERSE CONSTRUCTION JOINT
SCALE: 1" = 1'-0"

GRAPHIC SCALE 1" = 1' (2' 0 2')

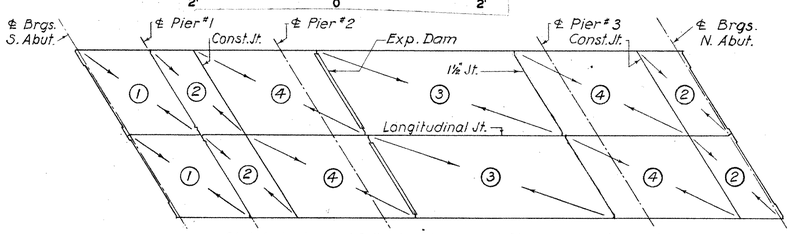

Slab to be poured following the numerical sequence shown above. Concrete shall be poured starting from acute corners as indicated in each slab.

SLAB POURING SEQUENCE
N.T.S.

NOTES:

1. ALL CONCRETE SHOWN ON THIS SHEET SHALL BE CLASS "C" CONCRETE. SPLICES OF BAR REINFORCEMENT SHALL BE 20 BAR DIAMETERS.
2. FOR ADDITIONAL SLAB REINFORCEMENT SEE SHEET NO. 28.
3. BRIDGE SLAB STEPS IN AT SEAT FOR APPROACH SLAB. SEAT LOCATION SHOWN ON SH. NOS. 9 & 10. SEE DETAIL "C" ON SHEET NO. 20 FOR ADDITIONAL BRIDGE SLAB DETAILS AT ABUTMENTS.

REVISIONS		
NO.	DATE	DESCRIPTION

CONNECTICUT
STATE HIGHWAY DEPARTMENT

TOWN OF NEW HAVEN
INTERSTATE ROUTE 91
OVER
QUINNIPIAC RIVER

BRIDGE SLAB DETAILS

DESIGNED BY LEONARD S. WEGMAN CO., CONTRACTING ENGINEER
SCALES AS NOTED
MADE BY H.G., R.M. DATE 4-24-62
CHECKED BY L.P., L.K. DATE 4-24-62
APPROVED [signature] DATE 4-24-62
PROJECT NO. 92-124
BRIDGE SHEET NO. 18 OF 35

OGILVIE PRESS, INC., BROOKLYN 17, N. Y. REPROVEL NO. 400M

92 124

M 258 01

29

FORM NO. ENG. 15 ED. 11-52

PUB. ROAD DIV. NO.	STATE	TOWN	FED. AID PROJ. NO.	PROJ. NO.	YEAR	ROUTE NO.	SHEET NO.	TOTAL SHEETS
1	CONN.	NEW HAVEN	ERAC-91-1(69)2	92-124	1962	I-91	30	57

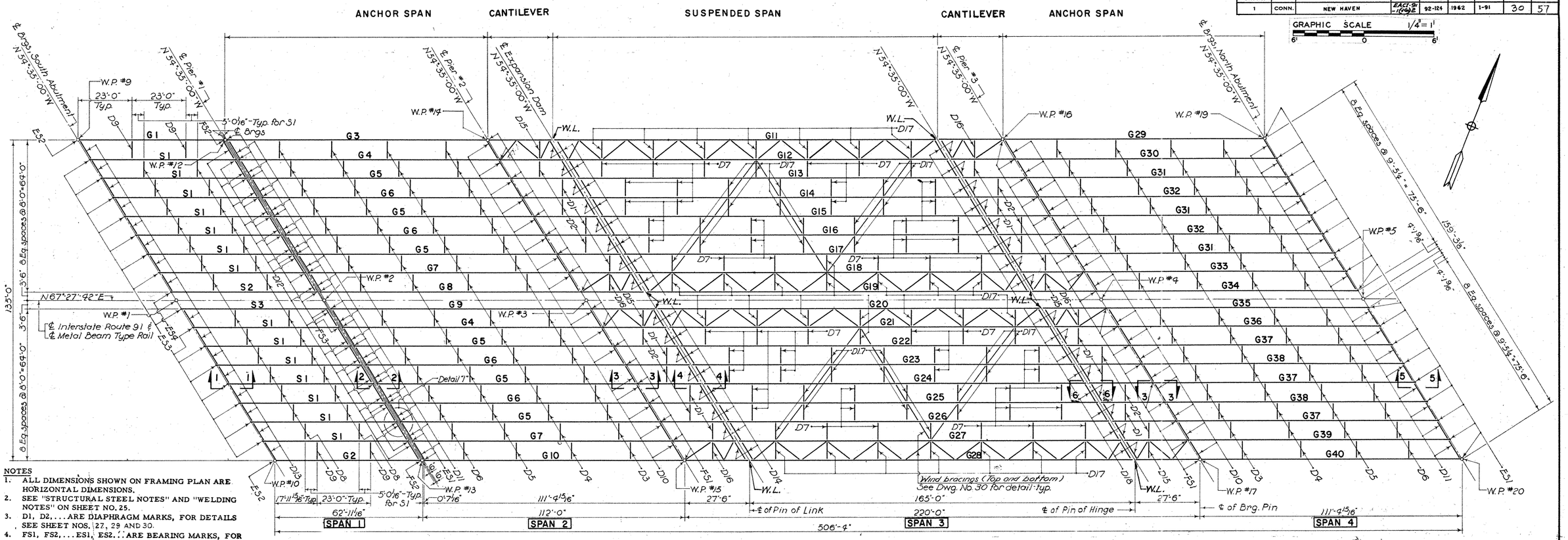

NOTES

1. ALL DIMENSIONS SHOWN ON FRAMING PLAN ARE HORIZONTAL DIMENSIONS.
2. SEE "STRUCTURAL STEEL NOTES" AND "WELDING NOTES" ON SHEET NO. 25.
3. D1, D2, . . . ARE DIAPHRAGM MARKS, FOR DETAILS SEE SHEET NOS. 27, 29 AND 30.
4. FS1, FS2, . . . ES1, ES2, . . . ARE BEARING MARKS, FOR DETAILS SEE SHEET NO. 32
5. FOR DETAILS OF SHEAR CONNECTORS, SEE SHEET NO. 25

W.L. = Wind Lock at bottoms of bottom flanges (exterior and median girders only). See Sheet No. 26 for details.

FRAMING PLAN

All girders are parallel. Bearings of center lines of girders shall be N 67°-27'-42" E.

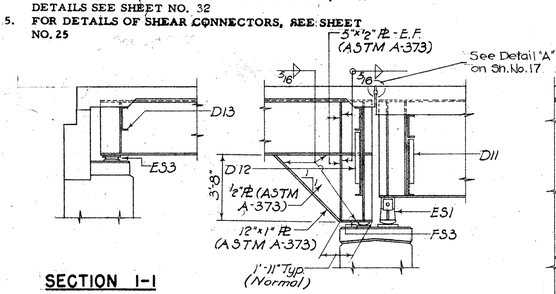

SECTION 1-1

SECTION 2-2

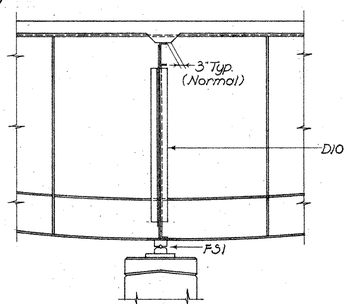

SECTION 3-3

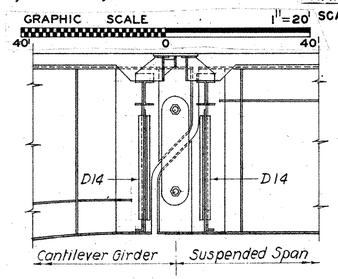

SECTION 4-4

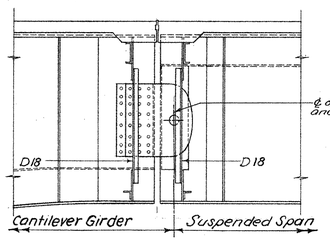

SECTION 6-6

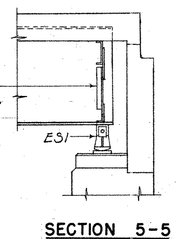

SECTION 5-5

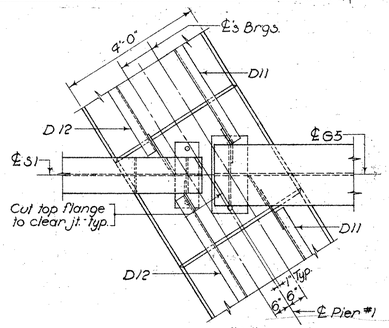

DETAIL "1"

SCALE: 1/2" = 1'-0"

GRAPHIC SCALE 1/2" = 1'

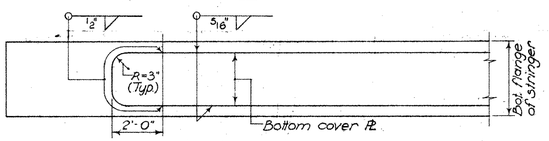

PLAN AT END OF COVER PLATE

N.T.S.

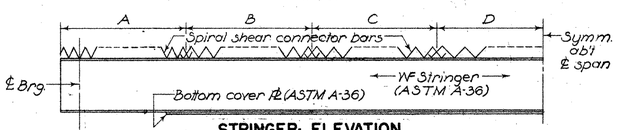

STRINGER ELEVATION

N.T.S.

STRINGER SCHEDULE

STRINGER MARK	HORIZONTAL DISTANCE C. TO C. BEARINGS	NUMBER REQUIRED	SIZE OF STRINGER	SIZE OF BOTTOM PLATE	ALTERNATE "A" SPIRAL SHEAR CONNECTOR BARS: DIAMETER OF BAR	SPIRAL PITCH A: PITCH	SPIRAL PITCH B: PITCH	SPIRAL PITCH C: PITCH	SPIRAL PITCH D: PITCH	ALTERNATE "B" STUD SHEAR CONNECTOR BARS. (5") DIAMETER OF STUD	STUD SPACING A: SPACING	STUD SPACING B: SPACING	STUD SPACING C: SPACING	STUD SPACING D: SPACING
S 1	62'-4"	14	36 WF 150	10"×3/4"×93'-0"	Two-3/4"	8'-1 1/2" / 6 1/2"	8'-2" / 7"	7'-9 1/2" / 8 1/2"	Balance / 10 1/2"	Two-7/8"	8'-0" / 4"	7'-10 1/2" / 4 1/2"	8'-3" / 3 1/2"	Balance / 6 1/2"
S 2	62'-4"	1	36 WF 230	8"×7/8"×40'-0"	Two-3/4"	8'-0" / 6"	8'-1 1/2" / 6 1/2"	8'-0" / 8"	Bal. / 9 1/2"	Two-7/8"	7'-10 1/2" / 3 1/2"	8'-0" / 4"	7'-11" / 5"	Bal. / 6"
S 3	62'-4"	1	36 WF 182	10"×1"×44'-0"	Two-3/4"	8'-3" / 5 1/2"	8'-1 1/2" / 6 1/2"	8'-1 1/2" / 7 1/2"	Bal. / 9"	Two-7/8"	7'-10 1/2" / 3 1/2"	8'-0" / 4"	7'-11" / 5"	Bal. / 6"

REVISIONS

NO.	DATE	DESCRIPTION

CONNECTICUT
STATE HIGHWAY DEPARTMENT

TOWN OF NEW HAVEN
INTERSTATE ROUTE 91
OVER
QUINNIPIAC RIVER
FRAMING PLAN

DESIGNED BY LEONARD S. WEGMAN CO., CONTRACTING ENGINEER

SCALES 1" = 1'-0" EXCEPT AS NOTED — PROJECT NO. 92-124

MADE BY H.L., L.P. — DATE 4-24-62

CHECKED BY L.K. — DATE 4-24-62

APPROVED [signature] — DATE 4-24-62

BRIDGE SHEET NO. 19 OF 35

92 92 124

M 258 01

FORM NO. ENG. 15 ED. 11-52

PUB. ROAD DIV. NO.	STATE	TOWN	FED. AID PROJ. NO.	PROJ. NO.	YEAR	ROUTE NO.	SHEET NO.	TOTAL SHEETS
1	CONN.	NEW HAVEN	FACT-91-1(162)	92-124	1962	I-91	31	57

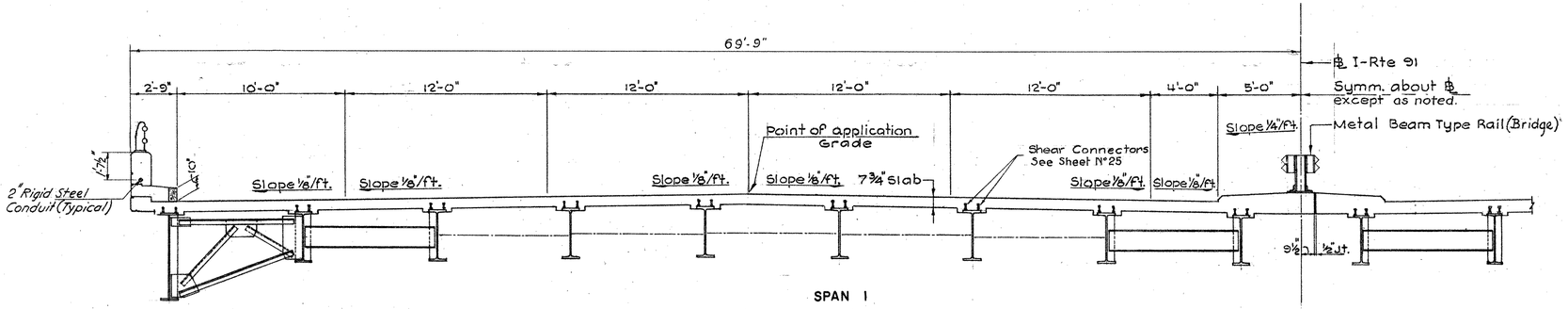

SPAN 1

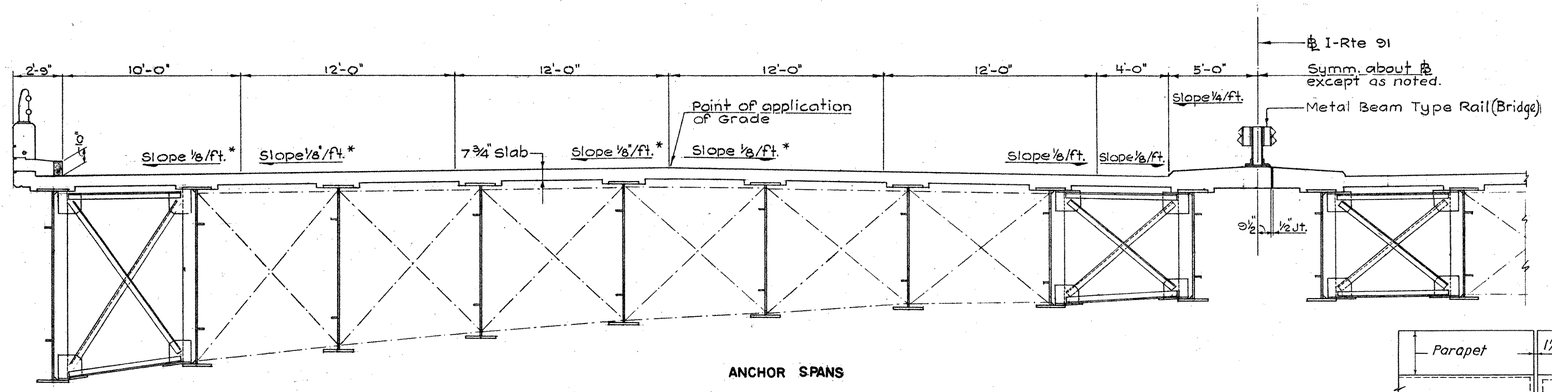

ANCHOR SPANS

Span 2 shown, Span 4 similar

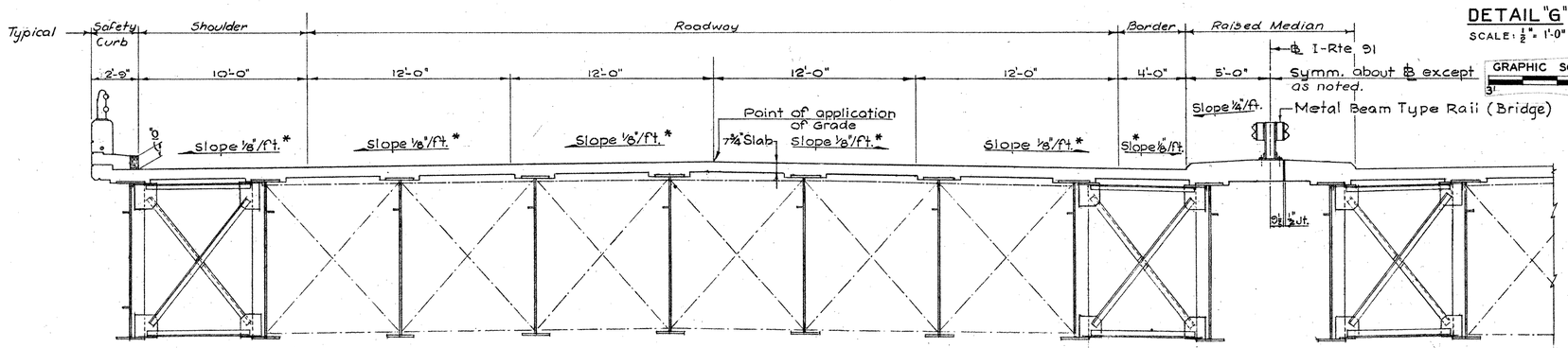

SUSPENDED SPAN

BRIDGE CROSS SECTION

SCALE: 1/4" = 1'-0"

GRAPHIC SCALE 1/4" = 1'

6' 0 6'

NOTE: Cross slopes marked thus * shown for anchor span and suspended span apply from Pier No. 1 to Sta. 96+75. Cross slopes from Sta. 96+75 to North Abutment vary.

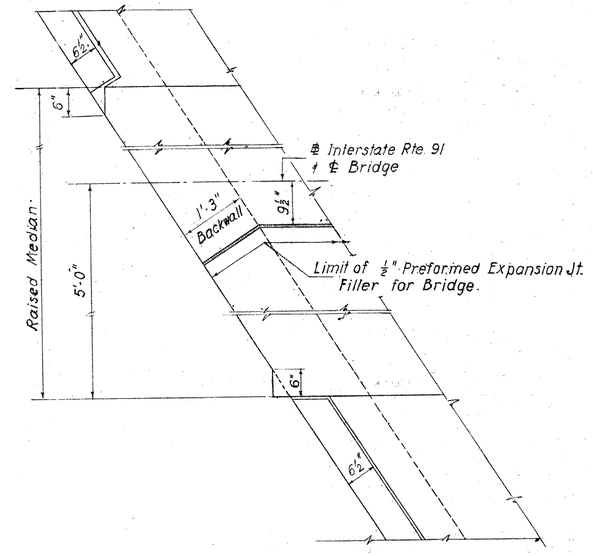

DETAIL "C" (JOINT AT ABUTMENTS)

SCALE: 3/4" = 1'-0"

GRAPHIC SCALE 3/4" = 1'

2' 0 2'

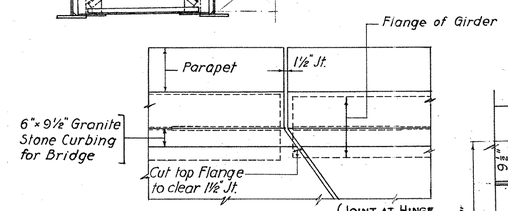

DETAIL "G" (JOINT AT HINGE & AT PIER #1)

SCALE: 1/2" = 1'-0"

GRAPHIC SCALE 1/2" = 1'

3' 0 3'

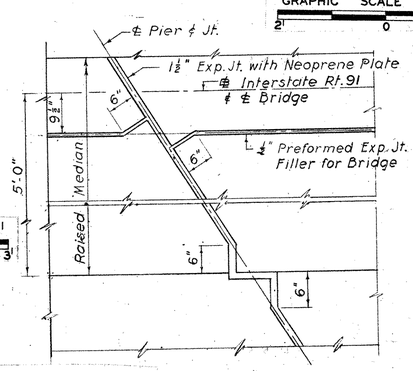

GRAPHIC SCALE 3/4" = 1'

2' 0 2'

DETAIL "D" (JOINT AT PIER #1 & AT HINGE)

SCALE: 3/4" = 1'-0"

For locations of Details "C", "D" & "G" see Sheet N°18.

NOTES

1. ALL CONCRETE SHOWN ON THIS SHEET SHALL BE CLASS "C" CONCRETE.
2. SLAB REINFORCEMENT NOT SHOWN SEE SHEET NOS. 17 & 18 FOR DETAILS.
3. SEE SHEET NO. 32 FOR DETAILS OF RAISED MEDIAN.
4. FOR DETAILS OF GIRDERS, SHEAR CONNECTORS AND DIAPHRAGMS SEE SHEET NOS. 19, 21, 22, 23, 24, 25, 26, 27, 29 & 30.

REVISIONS		
NO.	DATE	DESCRIPTION

CONNECTICUT
STATE HIGHWAY DEPARTMENT

TOWN OF NEW HAVEN
INTERSTATE ROUTE 91
OVER
QUINNIPIAC RIVER

BRIDGE CROSS SECTIONS

DESIGNED BY LEONARD S. WEGMAN CO., CONTRACTING ENGINEER

SCALES AS NOTED

MADE BY H.G., H.A.E. DATE 9-28-62

CHECKED BY L.P., L.K. DATE 9-28-62

APPROVED [signature] DATE 9-28-62

PROJECT NO. 92-124

BRIDGE SHEET NO. 20 OF 35

FORM NO. ENG. 18 ED. 11-52

PUB. ROAD DIV. NO.	STATE	TOWN	FED. AID PROJ. NO.	PROJ. NO.	YEAR	ROUTE NO.	SHEET NO.	TOTAL SHEETS
1	CONN.	NEW HAVEN	FACP-91-1(16)E	92-124	1962	I-91	32	57

GRAPHIC SCALE 3/16" = 1'

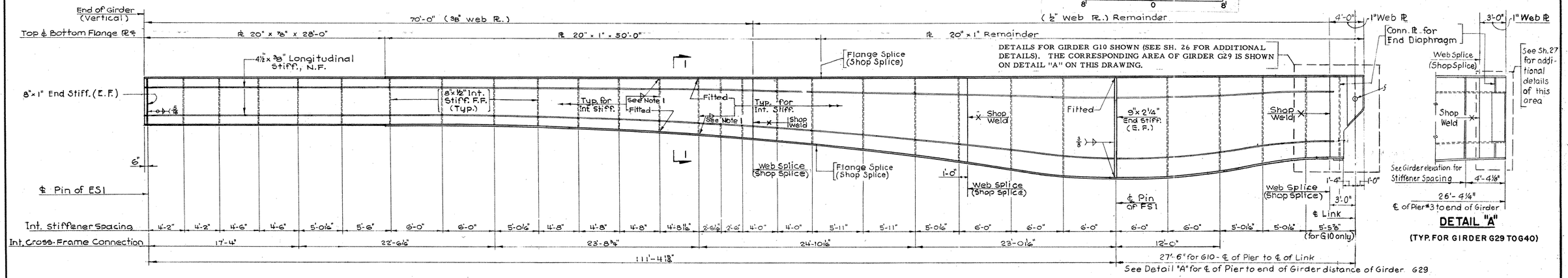

GIRDER ELEVATION — G10 & G29

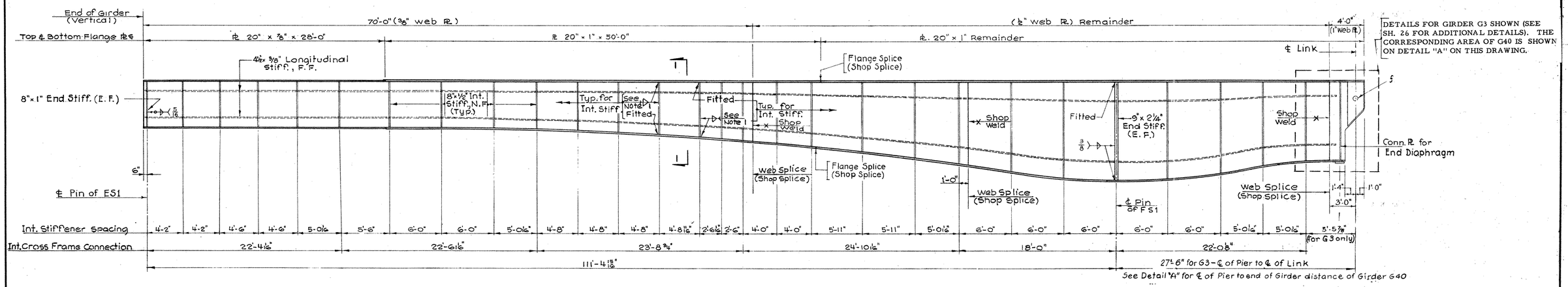

GIRDER ELEVATION — G3 & G40

REFERENCE NOTES
"STRUCTURAL STEEL NOTES" SHOWN ON SHEET NO. 25 APPLY.
"WELDING NOTES" SHOWN ON SHEET NO. 25 APPLY.

NOTES
1. SEE WELDING NOTE NO. 7 ON SHEET NO. 25 FOR SIZES OF WELDS.
2. SECTION 1-1 IS SHOWN ON SHEET NO. 23.
3. ALL DIMENSIONS MARKED THUS * ARE VERTICAL DIMENSIONS.
4. UNLESS OTHER WISE NOTED, ALL DIMENSIONS SHOWN ON THIS SHEET ARE HORIZONTAL DIMENSIONS.
5. UNLESS OTHERWISE NOTED, ALL STEEL SHOWN ON THIS SHEET SHALL CONFORM TO ASTM A-373

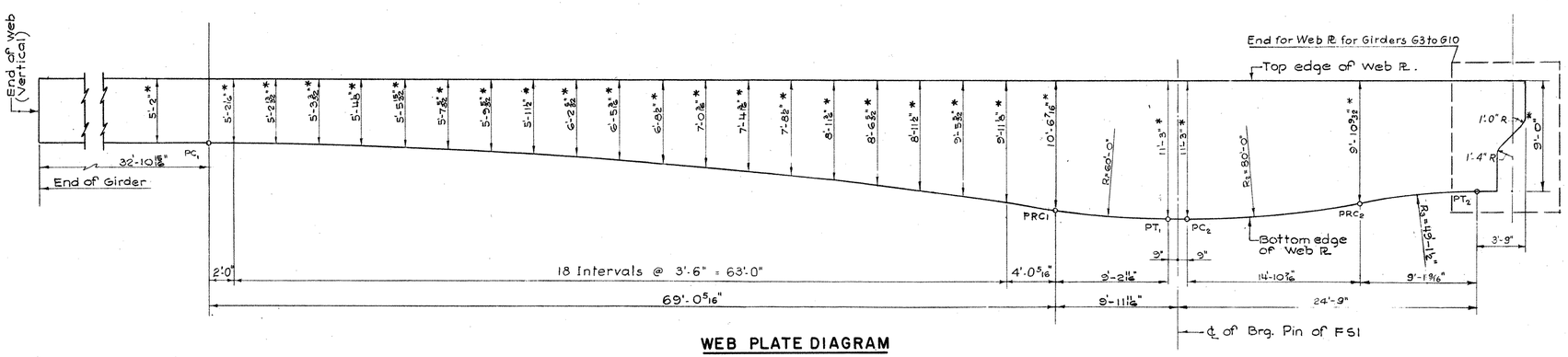

WEB PLATE DIAGRAM

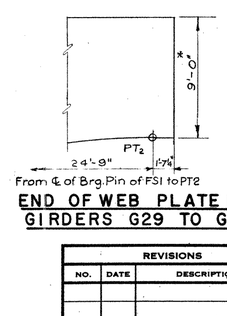

END OF WEB PLATE FOR GIRDERS G29 TO G40

REVISIONS		
NO.	DATE	DESCRIPTION

CONNECTICUT
STATE HIGHWAY DEPARTMENT

TOWN OF NEW HAVEN
INTERSTATE ROUTE 91 OVER QUINNIPIAC RIVER
GIRDER DETAILS I

DESIGNED BY LEONARD S. WEGMAN CO., CONTRACTING ENGINEER
SCALES 3/16" = 1'-0" EXCEPT AS NOTED
MADE BY L.P. DATE 4-24-62
CHECKED BY L.K. DATE 4-24-62
APPROVED [signature] DATE 4-24-62
PROJECT NO. 92-124
BRIDGE SHEET NO. 21 OF 35

92 124

M 258 01

32

FORM NO. ENG. 15 ED. 11-52

PUB. ROAD DIV. NO.	STATE	TOWN	FED. AID PROJ. NO.	PROJ. NO.	YEAR	ROUTE NO.	SHEET NO.	TOTAL SHEETS
1	CONN.	NEW HAVEN	BRF-91-1(16)2	92-124	1962	I-91	33	57

GRAPHIC SCALE 3/16" = 1'

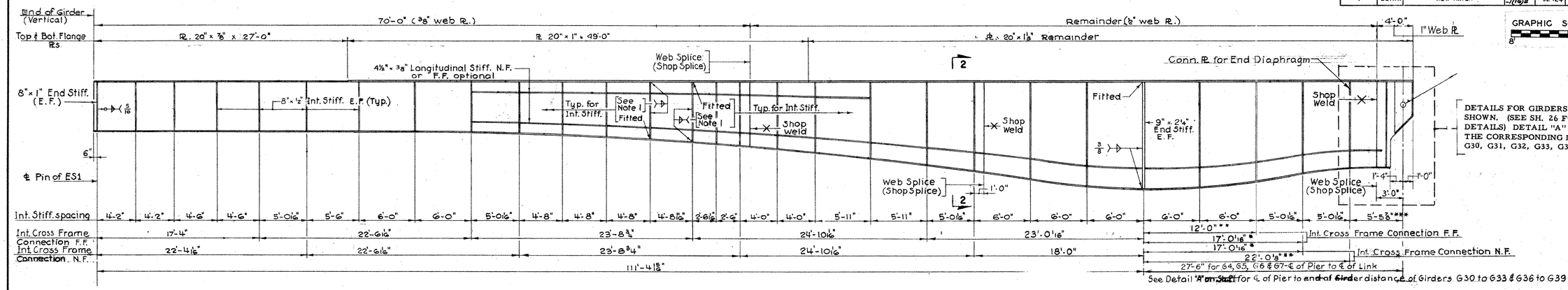

DETAILS FOR GIRDERS G4, G5, G6 & G7 SHOWN. (SEE SH. 26 FOR ADDITIONAL DETAILS) DETAIL "A" ON SH. 21 SHOWS THE CORRESPONDING DETAIL FOR GIRDERS G30, G31, G32, G33, G36, G37, G38 & G39.

GIRDER ELEVATION—G4, G5, G6, G7, G30, G31, G32, G33, G36, G37, G38 & G39

DIMENSIONS MARKED THUS * APPLY TO GIRDERS G4, G6, G7, G30, G32, G33, G36, G38 AND G39 ONLY.
DIMENSIONS MARKED THUS ** APPLY TO GIRDERS G5, G31 AND G37 ONLY.
DIMENSIONS MARKED THUS *** APPLY TO GIRDERS G4, G5, G6 & G7.

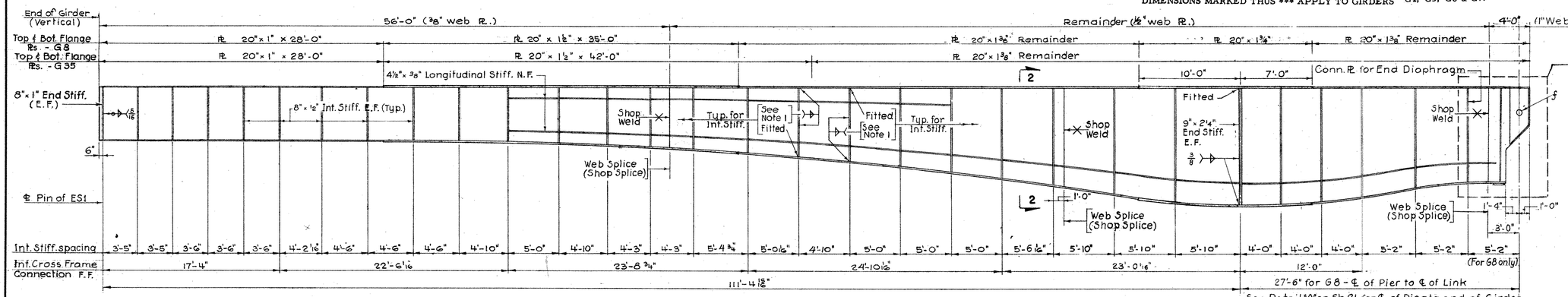

DETAIL FOR GIRDER G8 SHOWN. (SEE SH. 26 FOR ADDITIONAL DETAILS). DETAIL "A" ON SH. 21 SHOWS THE CORRESPONDING DETAIL FOR GIRDER G35.

GIRDER ELEVATION—G8 & G35

NOTES

1. SEE WELDING NOTE NO. 7 ON SHEET NO. 25 FOR SIZES OF WELDS.
2. THE DETAILS OF SECTIONS 2-2 ARE SHOWN ON SHEET NO. 23.
3. ALL DIMENSIONS SHOWN ON THIS SHEET ARE HORIZONTAL DIMENSIONS.
4. UNLESS OTHERWISE NOTED, ALL STEEL SHOWN ON THIS SHEET SHALL CONFORM TO ASTM A-373.

REFERENCE NOTES
"STRUCTURAL STEEL NOTES" SHOWN ON SHEET NO. 25 APPLY.
"WELDING NOTES" SHOWN ON SHEET NO. 25 APPLY.

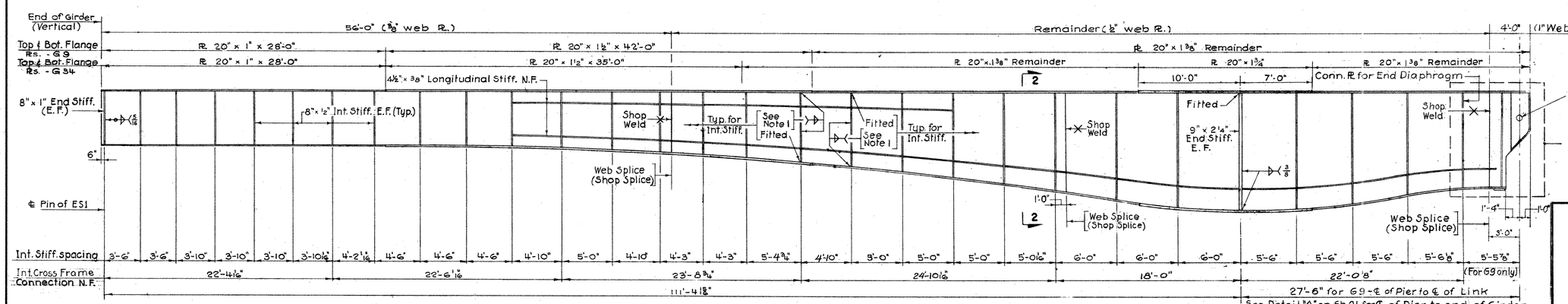

DETAIL FOR GIRDER G9 SHOWN. (SEE SH. 26 FOR ADDITIONAL DETAILS) DETAIL "A" ON SH. 21 SHOWS THE CORRESPONDING DETAIL FOR GIRDER G34.

GIRDER ELEVATION—G9 & G34

REVISIONS		
NO.	DATE	DESCRIPTION

CONNECTICUT
STATE HIGHWAY DEPARTMENT
TOWN OF NEW HAVEN
INTERSTATE ROUTE 91
OVER
QUINNIPIAC RIVER
GIRDER DETAILS II

DESIGNED BY LEONARD S. WEGMAN CO., CONTRACTING ENGINEER
SCALES 3/16" = 1'-0"
MADE BY L.P. DATE 4-24-62
CHECKED BY L.K. DATE 4-24-62
APPROVED Hubert Grandelli DATE 4-24-62
PROJECT NO. 92-124
BRIDGE SHEET NO. 22 OF 35

FORM NO. ENG. 15 ED. 11-61

PUB. ROAD DIV. NO.	STATE	TOWN	FED. AID PROJ. NO.	PROJ. NO.	YEAR	ROUTE NO.	SHEET NO.	TOTAL SHEETS
1	CONN.	NEW HAVEN	FACT-01-(162)	92-124	1962	I-91	34	57

GRAPHIC SCALE 3/16" = 1'

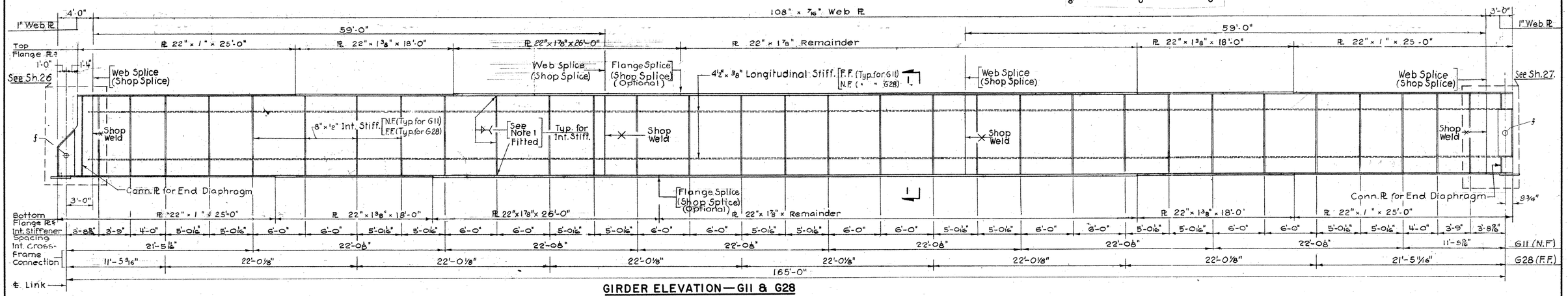

GIRDER ELEVATION—G11 & G28

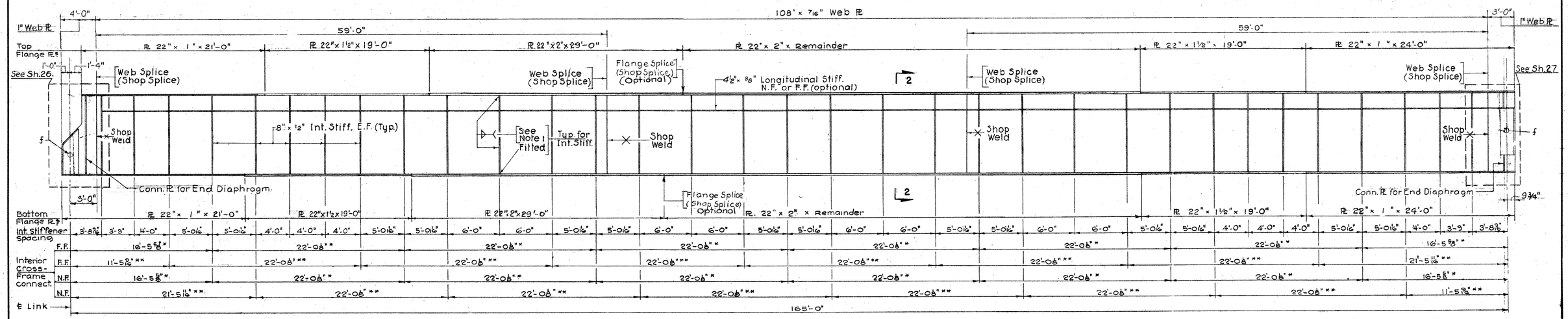

GIRDER ELEVATION—G12, G13, G14, G15, G16, G17, G18, G21, G22, G23, G24, G25, G26 & G27

DIMENSIONS MARKED THUS * APPLY TO GIRDERS G12, G14, G16, G18, G21, G23, G25 AND G27 ONLY.
DIMENSIONS MARKED THUS ** APPLY TO GIRDERS G13, G15, G17, G22, G24 AND G26 ONLY.

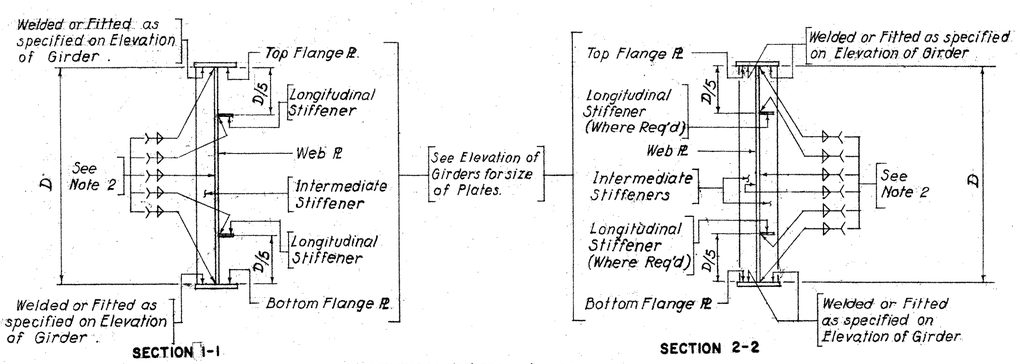

SECTION 1-1

SECTION 2-2

TYPICAL GIRDER SECTIONS (N.T.S.)

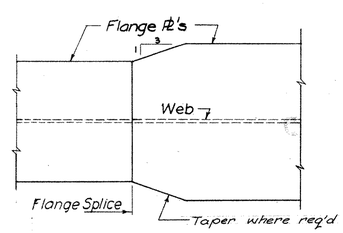

FLANGE SPLICE DETAIL
N.T.S.

REFERENCE NOTES
"STRUCTURAL STEEL NOTES" SHOWN ON SHEET NO. 25 APPLY.
"WELDING NOTES" SHOWN ON SHEET NO. 25 APPLY.

NOTES
1. SEE WELDING NOTE NO. 7 ON SHEET NO. 25 FOR SIZES OF WELDS.
2. UNLESS OTHERWISE NOTED, ALL STEEL SHOWN ON THIS SHEET SHALL CONFORM TO ASTM A-373.
3. ALL DIMENSIONS SHOWN ON GIRDER ELEVATIONS ARE HORIZONTAL DIMENSIONS.

REVISIONS		
NO.	DATE	DESCRIPTION

CONNECTICUT
STATE HIGHWAY DEPARTMENT
TOWN OF NEW HAVEN
INTERSTATE ROUTE 91
OVER
QUINNIPIAC RIVER
GIRDER DETAILS III

DESIGNED BY LEONARD S. WEGMAN CO., CONTRACTING ENGINEER
SCALES 3/16" = 1'-0" EXCEPT AS NOTED
MADE BY H.G., H.L. DATE 4-24-62
CHECKED BY L.P., L.K. DATE 4-24-62
APPROVED [signature] DATE 4-24-62
PROJECT NO. 92-124
BRIDGE SHEET NO. 23 OF 35

92-124
M258 01
34

FORM NO. ENG. 15B ED. 7-71

FHWA DIV. OFF.	STATE	TOWN	FED. AID PROJ. NO.	PROJ. NO.	YEAR	ROUTE NO.	SHEET NO.	TOTAL SHEETS
	CONN.	New Haven	"	92-218	1973	I-91	34A	57
1	"	"	EACI-91 -1(16)2	92-124 19G2	"			

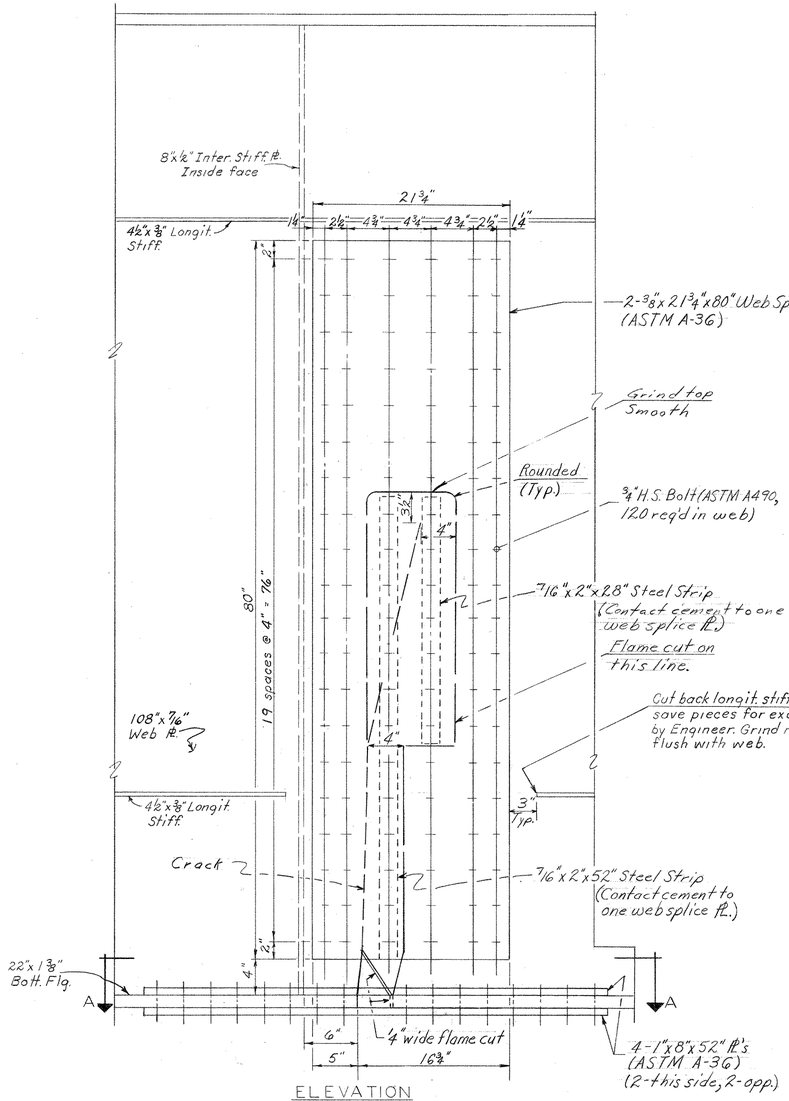

ELEVATION

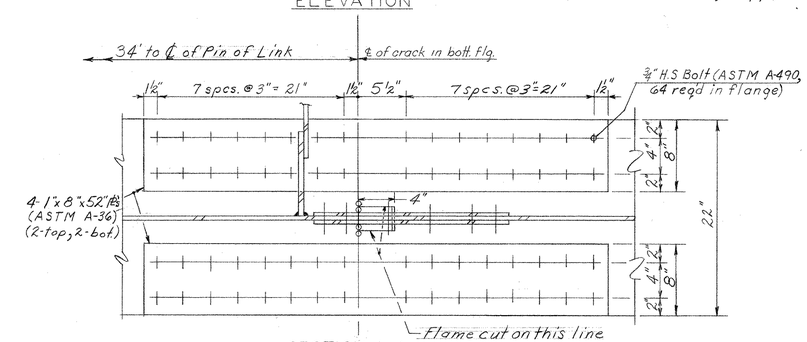

SECTION A-A

BOLTED REPAIR SPLICE

Scale 1½" = 1'

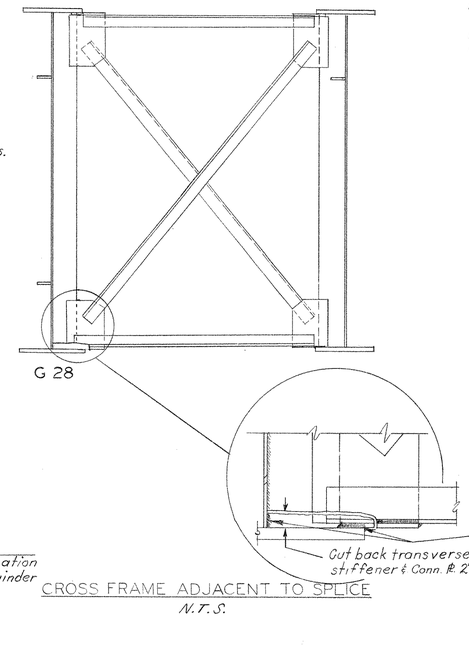

CROSS FRAME ADJACENT TO SPLICE

N.T.S.

QUANTITIES

2 — Web Splice Plates @ 185 lbs. ea. = 370
4 — Flange Splice Plates @ 118 lbs. ea. = 236
Steel Strips = 20
Total 626 lbs.

120 — ¾"ø x 2½" ASTM A 490 Bolts
64 — ¾"ø x 4¾" ASTM A 490 Bolts
184 — Plain hardened round washers
184 — Load indicating washers

GENERAL NOTES

Specifications: Connecticut State Highway Department Form 810 (1969), Interim Specifications and Special Provisions. "Specification for Structural Joints using ASTM A-325 or A-490 Bolts", approved by Research Council on Riveted and Bolted Structural Joints of the Engineering Foundation, April 18, 1972.
Design Specifications: Standard Specifications for Highway Bridges (AASHO 1973).
Allowable Design Stresses:
Structural Steel: ASTM A-36 F_t = 20,000 psi. All thicknesses.
High Strength Bolts: ASTM A-490 Friction Type Connection F_v = 18,000 psi.
Live Load: HS 20-44.
Structural Steel: ASTM A 36
Paint: Painting will be done by others.

ERECTION NOTES

The repair procedure shall be as follows:

1. The transverse stiffener shall be cut and the welds broken as shown.
2. All holes shall be drilled in flange; the flange splice plates positioned and the bolts, nuts and washers loosely placed; the nuts shall be "snugged" from the crack centerline outward, alternating on each side of the crack; the nuts shall then be finally tightened such that the load indicating washer has a gap of 0.015 inches or less.
3. The flange shall next be flame cut as shown with the cut starting and ending at the outer edge of the inner hole. The cut opposite the flange crack shall be ¼" inch wide. Before proceeding into the web with the ¼" cut, the flange piece shall be supported from below. When this cut is completed, the piece shall be moved straight back and then downward without marring the fracture surface. The piece shall immediately be wrapped in soft cloth and packed in a box.
4. The longitudinal stiffener shall be cut off as shown. The pieces shall be wrapped in soft cloth and boxed.
5. The web shall then be flame cut along the lines shown. The plate shall not be allowed to move until it can be gently removed without marring the crack surface. The piece shall be wrapped in soft cloth.
6. The holes for the web splice shall then be drilled; the splice plates positioned with the bolts, nuts and washers loose; the nuts "snugged" from the center of the plate outward; and the nuts finally tightened such that the load indicating washer has a gap of 0.015 inches or less.

Notes:

- Bolted Repair Splice is a Friction-Type Connection using 184 - A-490 Bolts in the splice (120 in web, 64 in flange). A Load Indicator Washer shall be used under bolt heads and a plain washer under nuts. Nuts only shall be turned.
- All holes shall be drilled 1 3/16" ø.
- All splice plates shall conform to ASTM A-36 and shall be smooth and free from burrs, nicks and gouges.
- All paint, mill scale, rust, grease and oil shall be removed by either sand or grit blasting. Oil and grease may also be removed by solvent cleaning.
- The Load Indicating Washer shall be the "Coronet" Load Indicator ("V" grade) supplied by either Cooper + Turner, 111 Founders Plaza, East Hartford Conn. or Bethlehem Steel Corp. The load indicating washers shall be installed according to the manufacturer's latest printed instructions.
- Bolt heads shall face downward on the flange splice and inward on the web splice.
- All lines to be flame cut shall be marked, prior to cutting, with a heavy black felt tip marker.

CONNECTICUT
DEPARTMENT OF TRANSPORTATION
BUREAU OF HIGHWAYS

NEW HAVEN

INTERSTATE ROUTE 91
OVER
QUINNIPIAC RIVER

BOLTED SPLICE REPAIRS-G 28

NO.	DATE	DESCRIPTION

REVISIONS

ENGINEER BRIDGE DESIGN SECTION
APPROVED E. T. Koenig DATE 11/27/73
DRAFTSMAN T.S.R. CHECKER R.F.V. DESIGNER R.F.V.
STRUCTURE NO. 03093 STRUCTURE SHEET 1 OF 1

BRUNING 44-132 15587

92 218 & 92 124

M 258 01

34-A

FORM NO. ENG. 18 ED. 11-58

PUB. ROAD DIV. NO.	STATE	TOWN	FED. AID PROJ. NO.	PROJ. NO.	YEAR	ROUTE NO.	SHEET NO.	TOTAL SHEETS
1	CONN.	NEW HAVEN	[illegible]	92-124	1962	I-91	35	57

GRAPHIC SCALE 3/16" = 1'

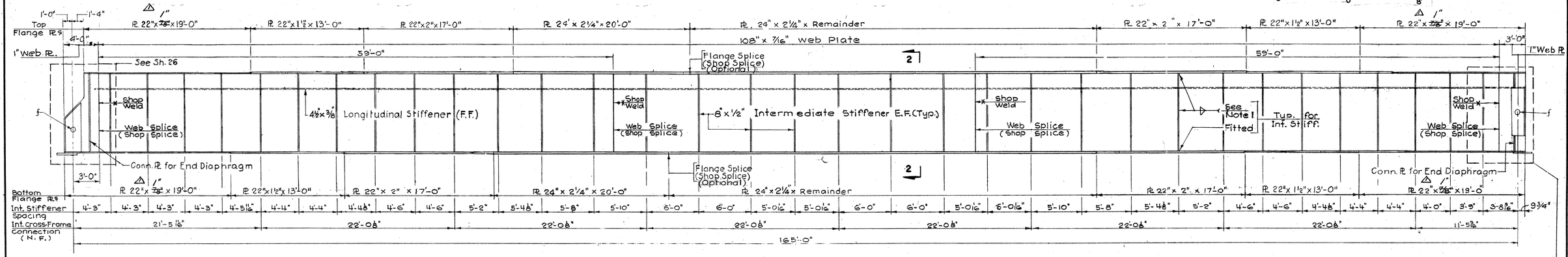

GIRDER ELEVATION — G20

See Sheet N° 27 for additional details of this area

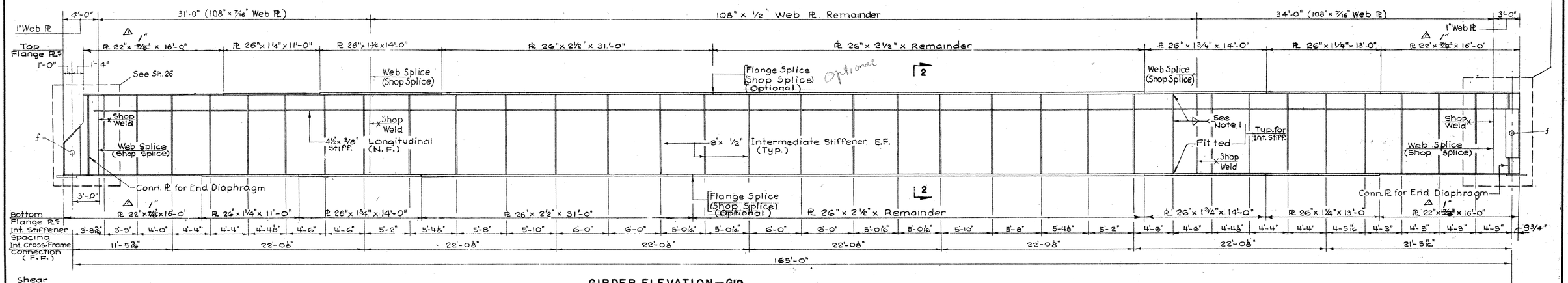

GIRDER ELEVATION — G19

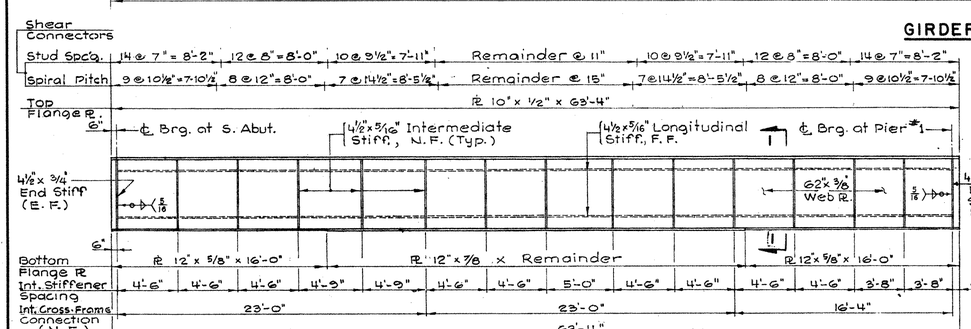

GIRDER ELEVATION — G1

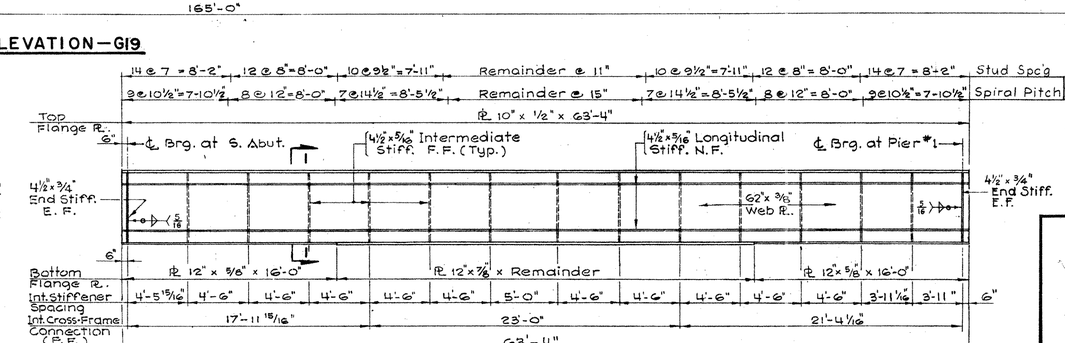

GIRDER ELEVATION — G2

NOTES:

1. SEE WELDING NOTE NO. 7 ON SHEET NO. 25. FOR SIZES OF WELDS.
2. THE DETAILS OF SECTIONS 1-1 AND 2-2 ARE SHOWN ON SHEET NO. 23
3. FOR DETAILS OF SHEAR CONNECTORS SEE SHEET NO. 25.
4. ALL DIMENSIONS SHOWN ON GIRDER ELEVATIONS ARE HORIZONTAL DIMENSIONS.
5. UNLESS OTHERWISE NOTED, ALL STEEL SHOWN ON THIS SHEET SHALL CONFORM TO ASTM A-373.

REFERENCE NOTES:

"STRUCTURAL STEEL NOTES" SHOWN ON SHEET NO. 25 APPLY.
"WELDING NOTES" SHOWN ON SHEET NO. 25 APPLY.

REVISIONS		
NO.	DATE	DESCRIPTION
1	10/16/62	Revised E Thickness

CONNECTICUT
STATE HIGHWAY DEPARTMENT
TOWN OF NEW HAVEN
INTERSTATE ROUTE 91
OVER
QUINNIPIAC RIVER
GIRDER DETAILS IV

DESIGNED BY LEONARD S. WEGMAN CO., CONTRACTING ENGINEER
SCALES 3"/16" = 1'-0"
MADE BY H.L., W.N.L. DATE 4-24-62
CHECKED BY L.P., L.K. DATE 4-24-62
APPROVED [signature] DATE 4-24-62
PROJECT NO. 92-124
BRIDGE SHEET NO. 24 OF 35

92 124

M 258 01

35

DESIGN MOMENTS AND SHEARS FOR GIRDERS OF SPAN 1 AND SUSPENDED SPAN

GIRDER MARK	MAXIMUM MOMENT (AT CENTER LINE OF SPAN) (FT.-KIPS)			END SHEAR (KIPS)		
	DEADLOAD	SUPERIMPOSED DEADLOAD (AFTER CONCRETE SLAB HAS SET)	LIVELOAD AND IMPACT	DEADLOAD	SUPERIMPOSED DEADLOAD (AFTER CONCRETE SLAB HAS SET)	LIVELOAD AND IMPACT
G1, G2	467	128	718	30	8	52
G11, G28	4,500	885	2,280	108	22	62
G12 to G18 G21 to G27	4,870	885	2,490	118	22	67
G19	7,170	885	3,040	174	22	82
G20	5,650	885	3,040	137	22	82

DESIGN MOMENTS AND SHEARS FOR GIRDERS OF ANCHOR SPANS

GIRDER MARK	LOADING	MOMENTS (FT.-KIPS)				SHEARS (KIPS)				
		M_1	M_2	M_3	M_4	V_1	V_2	V_3	V_4	V_5
G3, G10	D. L. *	+ 540	+ 60	-1,360	-4,060	+38	-34	-113	+168	+130
G29, G40	L. L. +I.	+1,060 - 520	+1,400 -1,040	+1,060 -1,560	-2,080	+53 -19	+24 -43	- 72	+ 83	+ 68
	Total	+1,600	+1,460 - 980	-2,920	-6,140	+91	-77	-185	+251	+198
G4, G5, G6, G7, G30, G31, G32, G33, G36, G37, G38, G39	D. L. *	+ 640	+ 150	-1,450	-4.290	+43	-37	-122	+178	+140
	L. L. +I	+1,150 - 560	+1,520 -1,130	+1,150 -1,690	-2,250	+58 -20	+26 -46	- 78	+ 91	+ 74
	Total	+1,790	+1,670 - 980	-3,140	-6,540	+101	-83	-200	+269	+214
G8, G34	D. L. *	+ 990	+ 330	-2,060	-6,260	+65	- 63	-180	+254	+195
	L. L. +I.	+1,410 - 690	+1,870 -1,390	+1,410 -2,080	-2,780	+71 -25	+32 -57	- 96	+111	+ 91
	Total	+2,400	+2,200 -1,060	-4,140	-9,040	+136	-120	-276	+365	+286
G9, G35	D. L. *	+ 730	+ 160	-1,710	-5,040	+49	-52	-141	+208	+158
	L. L. +I	+1,410 - 690	+1,870 -1,390	+1,410 -2,080	-2,780	+71 -25	+32 -57	- 96	+111	+ 91
	Total	+2,140	+2,030 -1,230	-3,790	-7,820	+120	-109	-237	+319	+249

* D. L. including 25 PSF Future Paving Allowance

DEAD LOAD DEFLECTIONS AND CAMBERS (INCHES)

BEAM MARK	POINT	DEAD LOAD DEFLECTIONS: STRUCTURAL STEEL	DECK SLAB	SAFETY CURB AND PARAPET	FUTURE PAVING ALLOWANCE	CAMBERS: TOTAL DEAD-LOAD CAMBER	VERTICAL CURVE ORDINATE	EXTRA CAMBER	TOTAL CAMBER REQUIRED
G3, G10	B	+1/8	+1/4	+1/16	+1/16	+1/2			1/2
	C	+1/8	+1/4	0	0	+3/8			3/8
	D	0	0	0	0	0	0	0	0
	F	+1/8	+1/4	0	0	+3/8			3/8
G4, G5 G6, G7	B	+1/8	+1/4	+1/16	+1/16	+1/2			1/2
	C	+1/8	+1/4	0	0	+3/8			3/8
	D	0	0	0	0	0	0	0	0
	F	+1/8	+1/4	0	0	+3/8			3/8
G8	B	+1/8	+7/16	0	+1/16	+5/8			5/8
	C	+1/8	+1/4	0	0	+3/8			3/8
	D	0	0	0	0	0	0	0	0
	F	+1/8	+5/16	0	+1/16	+1/2			1/2
G9	B	+1/8	+5/16	0	+1/16	+1/2			1/2
	C	+1/8	+1/4	0	0	+3/8			3/8
	D	0	0	0	0	0	0	0	0
	F	+1/8	+1/4	0	0	+3/8			3/8
G29	B	+1/8	+1/4	+1/16	+1/16	+1/2	0		1/2
	C	+1/8	+1/4	0	0	+3/8	0		3/8
	D	0	0	0	0	0	0	0	0
	F	+1/8	+1/4	0	0	+3/8	+3		3 3/8
G30, G31 G32, G33	B	+1/8	+1/4	+1/16	+1/16	+1/2	0		1/2
	C	+1/8	+1/4	0	0	+3/8	0		3/8
	D	0	0	0	0	0	0	0	0
	F	+1/8	+1/4	0	0	+3/8	+3		3 3/8
G34	B	+1/8	+7/16	0	+1/16	+5/8	0		5/8
	C	+1/8	+1/4	0	0	+3/8	0		3/8
	D	0	0	0	0	0	0	0	0
	F	+1/8	+5/16	0	+1/16	+1/2	+3		3 1/2
G35	B	+1/8	+5/16	0	+1/16	+1/2	0		1/2
	C	+1/8	+1/4	0	0	+3/8	0		3/8
	D	0	0	0	0	0	0	0	0
	F	+1/8	+1/4	0	0	+3/8	+3 1/4		3 5/8
G36, G37 G38, G39	B	+1/8	+1/4	+1/16	+1/16	+1/2	0		1/2
	C	+1/8	+1/4	0	0	+3/8	0		3/8
	D	0	0	0	0	0	0	0	0
	F	+1/8	+1/4	0	0	+3/8	+3 1/4		3 5/8
G40	B	+1/8	+1/4	+1/16	+1/16	+1/2	0		1/2
	C	+1/8	+1/4	0	0	+3/8	0		3/8
	D	0	0	0	0	0	0	0	0
	F	+1/8	+1/4	0	0	+3/8	+3 1/4		3 5/8
G1, G2	Center of Span	+1/8	+3/8	0	0	+1/2	0	+5/8	1 1/8
G11	"	+1	+1 7/8	+1/8	+3/8	+3 3/8	0	+5/8	4
G12, G13	"	+1	+1 7/8	+1/8	+3/8	+3 3/8	0	+5/8	4
G14, G15, G16	"	+1	+1 7/8	+1/8	+3/8	+3 3/8	0	+5/8	4
G17, G18	"	+1	+1 7/8	+1/8	+3/8	+3 3/8	0	+5/8	4
G19	"	+7/8	+2 1/4	+1/8	+1/4	+3 1/2	0	+5/8	4 1/8
G20	"	+15/16	+2	+1/8	+5/16	+3 3/8	0	+5/8	4
G21	"	+1	+1 7/8	+1/8	+3/8	+3 3/8	0	+5/8	4
G22	"	+1	+1 7/8	+1/8	+3/8	+3 3/8	0	+5/8	4
G23	"	+1	+1 7/8	+1/8	+3/8	+3 3/8	0	+5/8	4
G24	"	+1	+1 7/8	+1/8	+3/8	+3 3/8	0	+5/8	4
G25	"	+1	+1 7/8	+1/8	+3/8	+3 3/8	0	+5/8	4
G26	"	+1	+1 7/8	+1/8	+3/8	+3 3/8	0	+5/8	4
G27	"	+1	+1 7/8	+1/8	+3/8	+3 3/8	0	+5/8	4
G28	"	+1	+1 7/8	+1/8	+3/8	+3 3/8	0	+5/8	4
S 1	"	+1/4	+13/16	+1/16	+1/8	+1 1/4	0	+5/8	1 7/8
S 2	"	+1/4	+1 1/8	+1/16	+1/16	+1 1/2	0	+5/8	2 1/8
S 3	"	+3/16	+7/8	+1/16	+1/8	+1 1/4	0	+5/8	1 7/8

STRUCTURAL STEEL NOTES

1. SEE SHEET NOS. 19, 20, 21, 22, 23, 24, 26, 27, 28, 29, 30 AND 32 FOR ASTM DESIGNATIONS OF STRUCTURAL STEEL.
2. ENDS OF STRINGERS AND GIRDERS TO BE VERTICAL UNDER FULL DEAD LOAD.
3. BEARING STIFFENERS AND INTERMEDIATE STIFFENERS SHALL BE PARALLEL AND VERTICAL AFTER APPLICATION OF FULL DEAD LOAD.
4. SHOP SPLICES OTHER THAN THOSE SHOWN ON THE PLANS MAY BE REQUESTED BY THE CONTRACTOR. THE LOCATION OF THE ADDITIONAL SHOP SPLICES SHALL BE SUBJECT TO APPROVAL BY THE ENGINEER. THESE ADDITIONAL SHOP SPLICES, INCLUDING THE RADIOGRAPHING OF THEIR WELDS AS DETERMINED BY THE ENGINEER, SHALL BE AT NO EXPENSE TO THE STATE.
5. LOSS OF CAMBER DUE TO SHRINKAGE SHALL BE COMPENSATED FOR BY ADDITIONAL CAMBER WHICH IS TO BE DETERMINED BY THE FABRICATOR.
6. ALL ROLLED BEAMS SHALL BE HEAT CAMBERED IN THE SHOP TO THE TOTAL CAMBER GIVEN IN THE TABLE ON THIS SHEET AFTER SHOP WELDING IS COMPLETED.

WELDING NOTES

1. ALL WELDING SHALL CONFORM TO THE CURRENT STANDARD SPECIFICATION FOR WELDED HIGHWAY AND RAILWAY BRIDGES OF AMERICAN WELDING SOCIETY AND AS SUPPLEMENTED BY THE SPECIAL PROVISIONS.
2. ALL BUTT WELD DETAILS SHALL CONFORM TO THE CURRENT STANDARD SPECIFICATIONS FOR WELDED HIGHWAY AND RAILWAY BRIDGES OF AMERICAN WELDING SOCIETY.
3. DOUBLE VEE BUTT WELDS SHALL BE USED FOR WEB SHOP SPLICES.
4. DOUBLE GROOVE BUTT WELDS SHALL BE USED FOR ALL FLANGE SHOP SPLICES.
5. ALL BUTT WELDS IN THE TOP AND BOTTOM FLANGES AND IN WEB SHALL BE COMPLETELY RADIOGRAPHED. SEE SPECIAL PROVISIONS.
6. BUTT WELDS SHALL BE GROUND SMOOTH AND FLUSH WITH THE BASE MATERIAL AT ALL SURFACES.
7. FILLET WELDS FOR CONNECTION OF FLANGE PLATES TO WEB PLATES SHALL BE 5/16" FOR FLANGE PLATES UP TO AND INCLUDING 1 1/2" THICK, 3/8" FOR FLANGE PLATES UP TO AND INCLUDING 2 1/4", AND 1/2" FOR GREATER THICKNESS. USE SIMILAR WELDS FOR CONNECTION OF INTERMEDIATE STIFFENER PLATES TO FLANGE PLATES. FILLET WELDS FOR CONNECTION OF INTERMEDIATE STIFFENER PLATES AND LONGITUDINAL STIFFENER PLATES TO WEB PLATES SHALL BE 5/16".
8. ALL FLANGE TO WEB FILLET WELDS SHALL BE INSPECTED IN THEIR ENTIRETY BY THE MAGNETIC PARTICLE METHOD. SEE SPECIAL PROVISIONS.

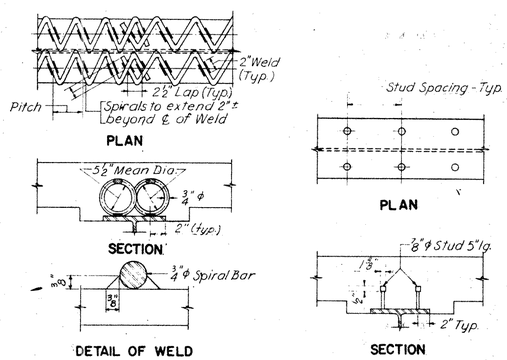

SPIRAL SHEAR CONNECTOR BARS (ALTERNATE "A")

WELDED STUD SHEAR CONNECTORS (ALTERNATE "B")

Paid for under the Item of Shear Connectors. See special provisions.

Spiral Shear Connector Bars.	lb.	8,500
Welded Stud Shear Connectors	each	5,350

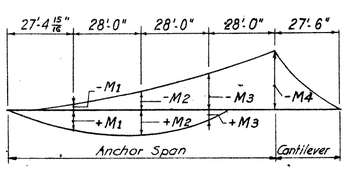

ANCHOR SPAN MOMENT DIAGRAM

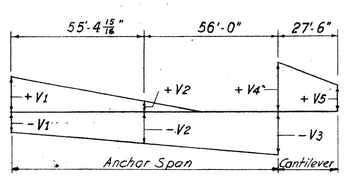

ANCHOR SPAN SHEAR DIAGRAM

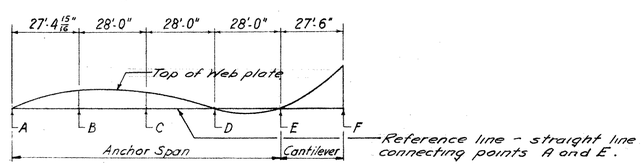

ANCHOR SPAN CAMBER DIAGRAM

REVISIONS		
NO.	DATE	DESCRIPTION

CONNECTICUT
STATE HIGHWAY DEPARTMENT

TOWN OF NEW HAVEN
INTERSTATE ROUTE 91
OVER
QUINNIPIAC RIVER

GIRDER DETAILS V

DESIGNED BY LEONARD S. WEGMAN CO., CONTRACTING ENGINEER
SCALES NO SCALE.
MADE BY L.P. DATE 4-24-62
CHECKED BY W.N.L., L.K. DATE 4-24-62
APPROVED Herbert L. and Olsen DATE 4-24-62
PROJECT NO. 92-124
BRIDGE SHEET NO. 25 OF 35

FORM NO. ENG. 12 ED. 11-52

PUB. ROAD DIV. NO.	STATE	TOWN	FED. AID PROJ. NO.	PROJ. NO.	YEAR	ROUTE NO.	SHEET NO.	TOTAL SHEETS
1	CONN.	NEW HAVEN	EACI-91-1(176)2	92-124	1962	I-91	37	57

GRAPHIC SCALE 3/4" = 1'

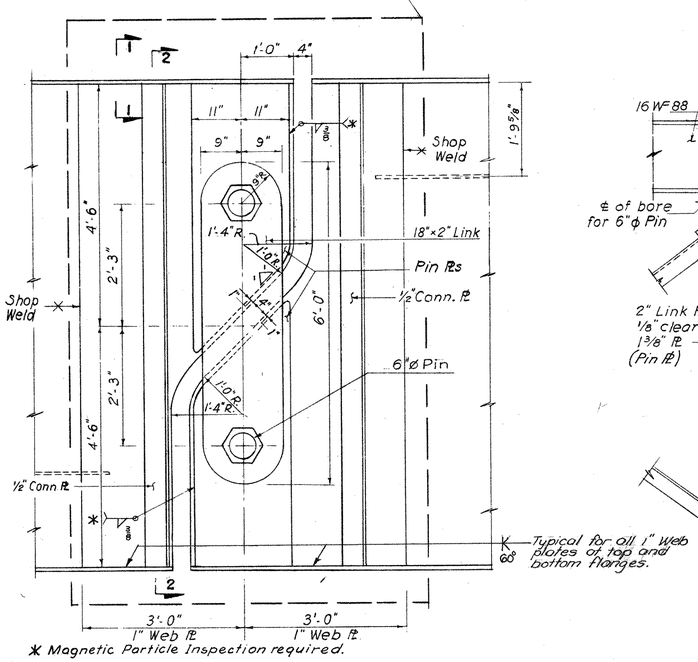

* Magnetic Particle Inspection required.

ELEVATION SHOWING LINK AND PIN PLATES

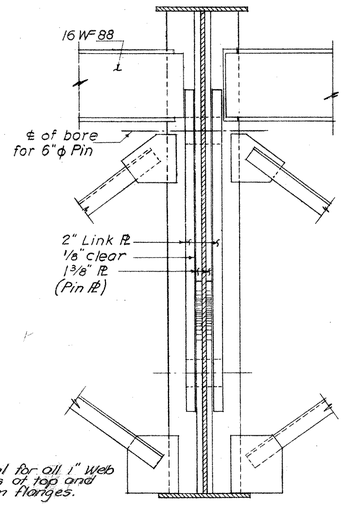

SECTION 2-2

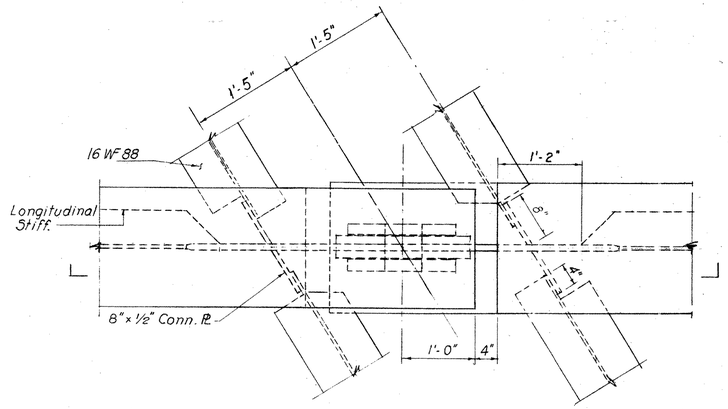

FOR INTERIOR GIRDERS (SLAB REMOVED)

NOTE: Cut top flange of cantilever girders to clear the web of the expansion dam by 2 3/4". Concrete slab of suspended span to clear the ends of the cantilever girders by a min. of 2 3/4" in the direction of expansion and by a min. of 1" in the other directions.

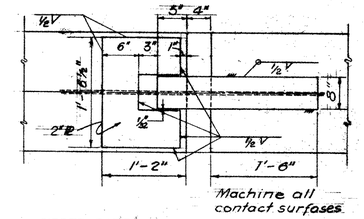

GIRDER BOTTOM FLANGE WITH WIND LOCK

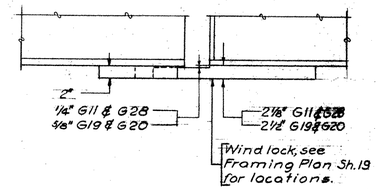

ELEVATION OF WIND LOCK

WIND LOCK DETAILS

SCALE: 1" = 1'-0"

GRAPHIC SCALE 1" = 1'

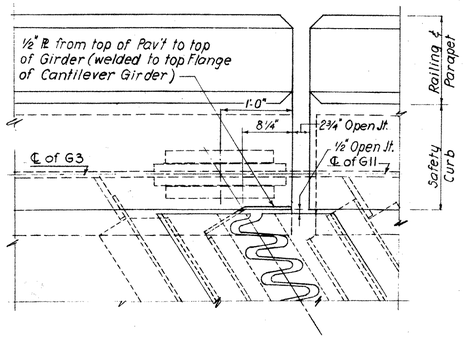

FOR EXTERIOR GIRDERS

PLAN OF LINK

SCALE: 1" = 1'-0"

GRAPHIC SCALE 1" = 1'

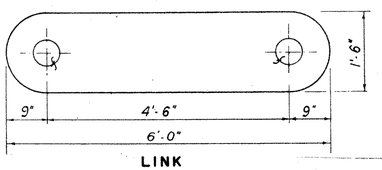

LINK

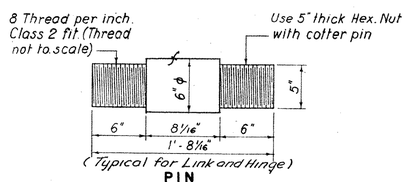

PIN

SCALE: 1 1/2" = 1'-0"

LINK DETAILS

GRAPHIC SCALE 1 1/2" = 1'

STEEL FOR PINS: PIN TO BE ASTM A-235* OR ASTM A-108 (GRADE 1016 TO 1030 INCL.) WITH A MINIMUM ROCKWELL SCALE B HARDNESS OF 80

*(Class C1)

NOTES:

1. STRUCTURAL STEEL NOTES AND WELDING NOTES SHOWN ON SHEET NO. 25 APPLY.
2. UNLESS OTHERWISE NOTED, ALL STEEL SHOWN ON THIS SHEET SHALL CONFORM TO ASTM A-373.

REVISIONS		
NO.	DATE	DESCRIPTION

CONNECTICUT
STATE HIGHWAY DEPARTMENT

TOWN OF NEW HAVEN
INTERSTATE ROUTE 91
OVER
QUINNIPIAC RIVER

LINK & WIND LOCK

DESIGNED BY LEONARD S. WEGMAN CO., CONTRACTING ENGINEER
SCALES 3/4" = 1'-0" EXCEPT AS NOTED
MADE BY H.G., L.P. DATE 4-24-62
CHECKED BY L.K. DATE 4-24-62
APPROVED [signature] DATE 4-24-62

PROJECT NO. 92-111
BRIDGE SHEET NO. 26 OF 35

FORM NO. ENG. 18 ED. 11-52

PUB. ROAD DIV. NO.	STATE	TOWN	FED. AID PROJ. NO.	PROJ. NO.	YEAR	ROUTE NO.	SHEET NO.	TOTAL SHEETS
1	CONN.	NEW HAVEN	EACI-91-1(14)2	92-124	196	I-91	38	57

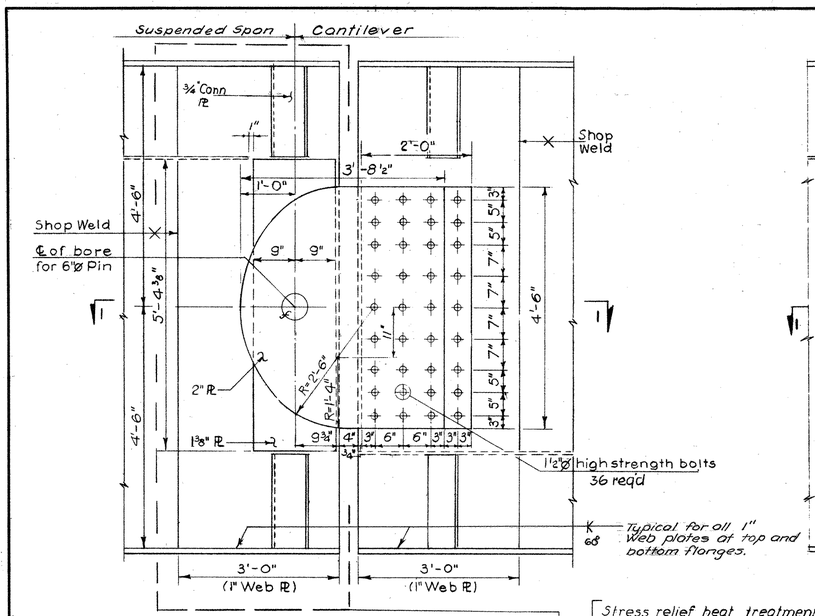

HINGE FOR GIRDER G20

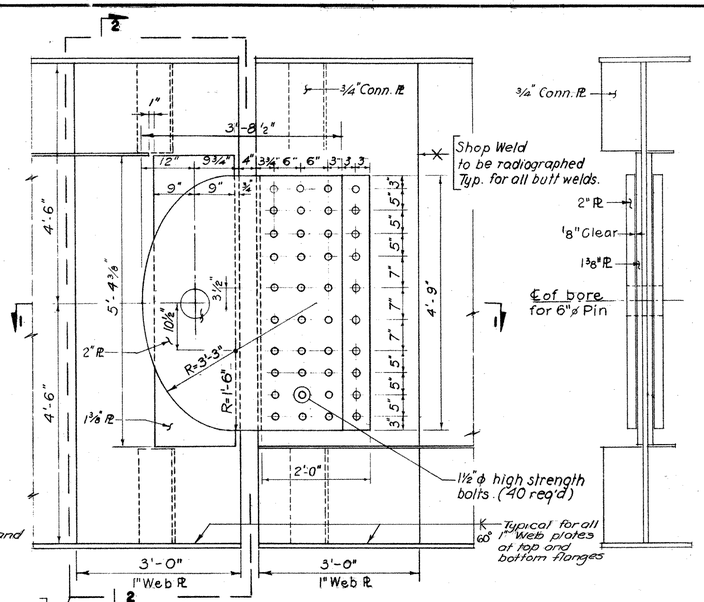

HINGE FOR GIRDER G19

SECTION 2-2

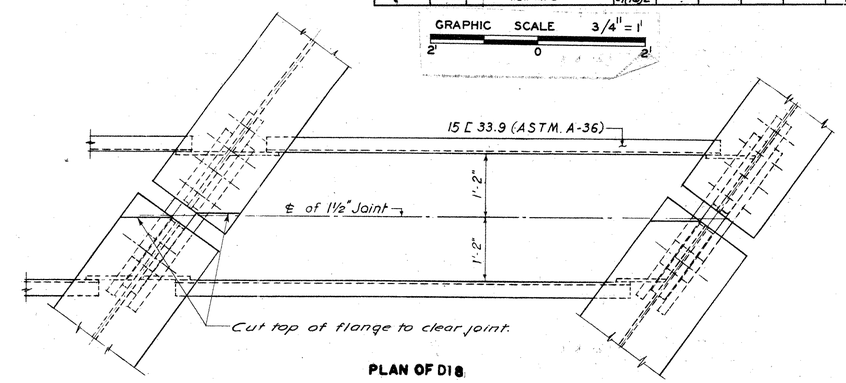

PLAN OF D18

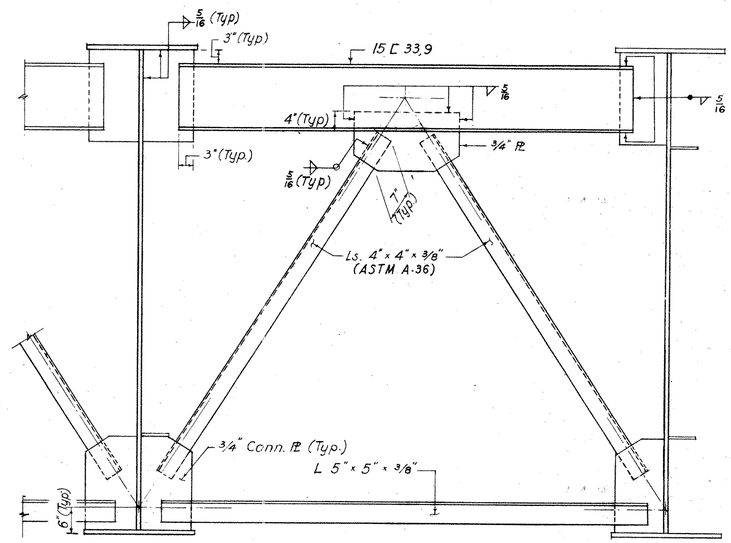

ELEVATION OF D18

END DIAPHRAGM AT HINGE

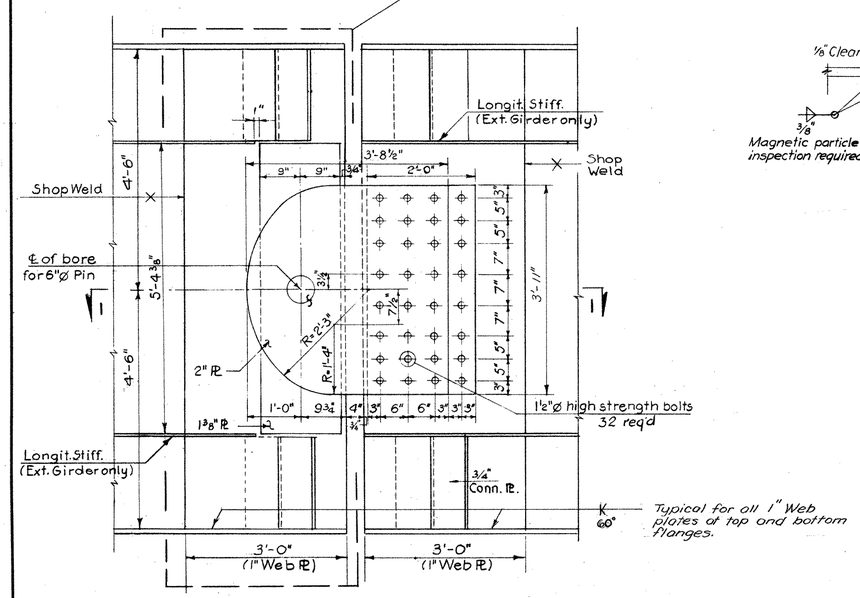

HINGE FOR GIRDERS G11 TO G18, G21 TO G33 & G36 TO G40 (INCL.)

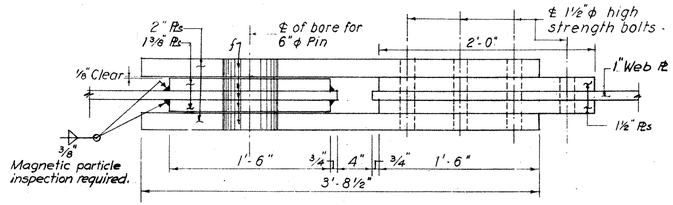

SECTION 1-1

SCALE: 1 1/2" = 1'-0"

GRAPHIC SCALE 1 1/2" = 1'

NOTES:

1. STRUCTURAL STEEL NOTES AND WELDING NOTES SHOWN ON SHEET NO. 25 APPLY.
2. UNLESS OTHERWISE NOTED, ALL STEEL SHOWN ON THIS SHEET SHALL CONFORM TO ASTM A-373.
3. SEE SPECIAL PROVISIONS FOR THE REQUIREMENTS PERTAINING TO THE HIGH STRENGTH BOLTS.
4. ALL HIGH STRENGTH BOLTED JOINTS SHALL BE FRICTION TYPE AS DEFINED IN THE SPECIFICATIONS FOR STRUCTURAL JOINTS USING ASTM A 325 BOLTS (SEE SPECIAL PROVISIONS.)
5. FOR PIN DETAILS SEE BRIDGE SHEET 26

NOTE "A"

STRESS RELIEF HEAT TREATMENT:

THE ENDS OF GIRDERS FOR WHICH STRESS RELIEF HEAT TREATMENT IS CALLED FOR SHALL BE SUBJECTED TO A HEAT TREATMENT IN ACCORDANCE WITH THE REQUIREMENTS OF THE STANDARD SPECIFICATIONS FOR WELDED HIGHWAY AND RAILWAY BRIDGES, SECTION 512, EXCEPT AS NOTED IN THE FOLLOWING: COOLING SHALL BE ACCOMPLISHED IN SUCH A MANNER THAT NO DISTORTIONS WILL RESULT; WHEN THE ASSEMBLY HAS COOLED TO 100° F IT MAY BE REMOVED FROM THE FURNACE.

REVISIONS		
NO.	DATE	DESCRIPTION

CONNECTICUT
STATE HIGHWAY DEPARTMENT

TOWN OF NEW HAVEN
INTERSTATE ROUTE 91
OVER
QUINNIPIAC RIVER

HINGE DETAILS

DESIGNED BY LEONARD S. WEGMAN CO., CONTRACTING ENGINEER
SCALES 3/4" = 1'-0" EXCEPT AS NOTED
MADE BY H.G. DATE 4-24-62
CHECKED BY L.P., L.K. DATE 4-24-62
APPROVED [signature] DATE 4-24-62

PROJECT NO. 92-124
BRIDGE SHEET NO. 27 OF 35

OGILVIE PRESS, INC., BROOKLYN 17, N. Y. REPROVEL NO. 400M

92 1124

M 258-011

FORM NO. ENG. 15 ED. 11-12

PUB. ROAD DIV. NO.	STATE	TOWN	FED. AID PROJ. NO.	PROJ. NO.	YEAR	ROUTE NO.	SHEET NO.	TOTAL SHEETS
1	CONN.	NEW HAVEN	FACP-91-1(16)2	92-124	1962	I-91	39	57

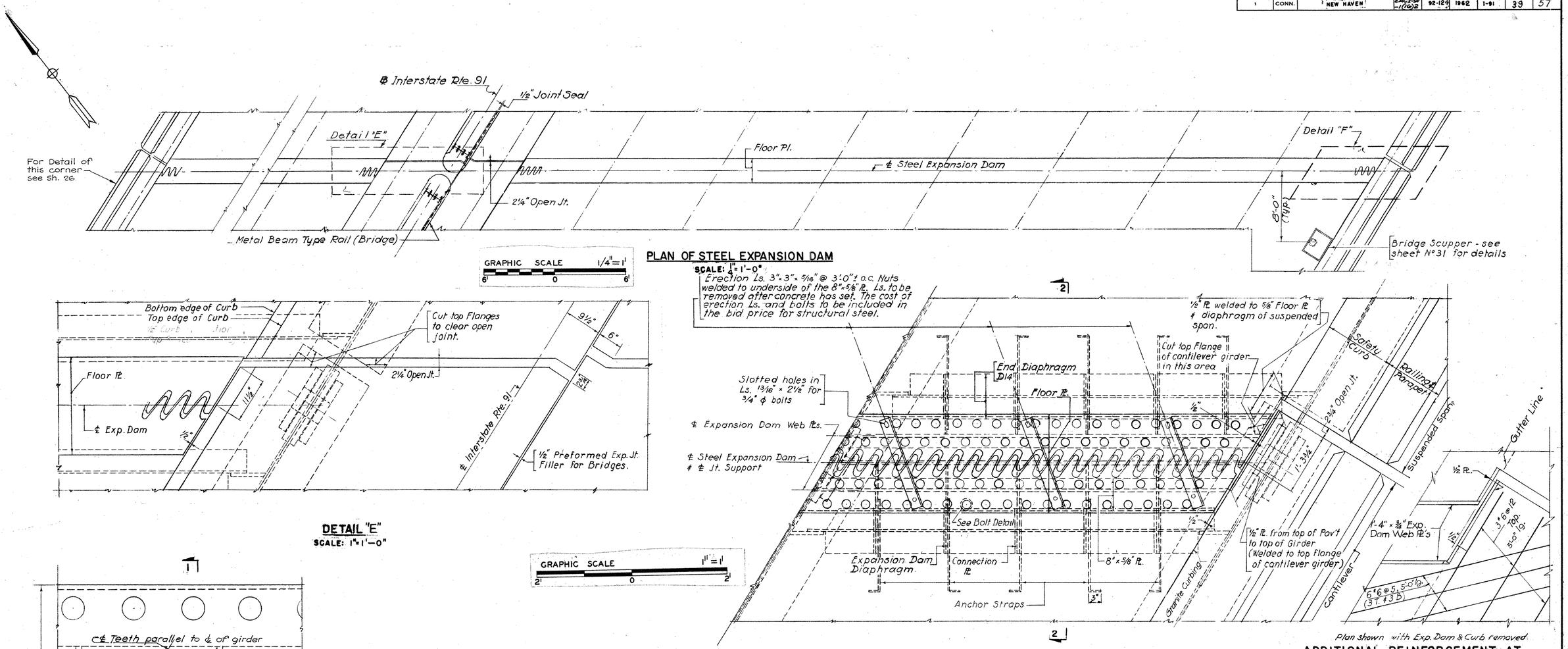

PLAN OF STEEL EXPANSION DAM

SCALE: 1/4" = 1'-0"

DETAIL "E"

SCALE: 1" = 1'-0"

DETAIL "F"

SCALE: 1" = 1'-0"

See sheet N°18 for reinforcement details.

ADDITIONAL REINFORCEMENT AT END OF EXPANSION DAM (TYP)

SCALE: 1" = 1'-0"

UNLESS OTHERWISE NOTED, ALL STEEL SHOWN ON THIS SHEET SHALL CONFORM TO ASTM A-373.

PLAN OF FLOOR PLATE

SCALE: 3/8" = 1'-0"

SECTION 2-2

SCALE: 1" = 1'-0"

BOLT DETAIL

SCALE: 1/2" = 1'-0"

SECTION 1-1

SCALE: 3/8" = 1'-0"

REVISIONS		
NO.	DATE	DESCRIPTION

CONNECTICUT
STATE HIGHWAY DEPARTMENT

TOWN OF NEW HAVEN
INTERSTATE ROUTE 91
OVER
QUINNIPIAC RIVER
EXPANSION DAM

DESIGNED BY LEONARD S. WEGMAN CO., CONTRACTING ENGINEER
SCALES AS NOTED
MADE BY H.G. DATE 4-24-62
CHECKED BY H.A.E., L.K. DATE 4-24-62
APPROVED [signature] DATE 4-25-62
PROJECT NO. 92-124
BRIDGE SHEET NO. 28 OF 35

92-124

M 258 91

39

FORM NO. ENG. 19 ED. 11-62

PUB. ROAD DIV. NO.	STATE	TOWN	FED. AID PROJ. NO.	PROJ. NO.	YEAR	ROUTE NO.	SHEET NO.	TOTAL SHEETS
1	CONN.	NEW HAVEN	EACI-91-1(16)2	92-124	1962	I-91	40	57

GRAPHIC SCALE 1/2" = 1'

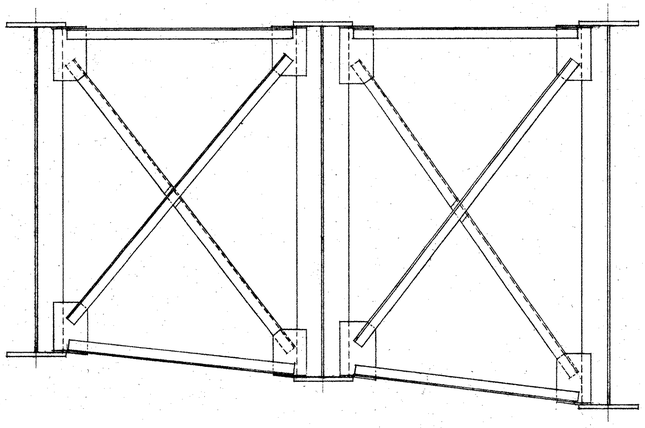

D1 & D15 D2 & D16

ELEVATION OF D1, D2, D15 & D16

The wind bracings to be connected to D15 & D16 are not shown.

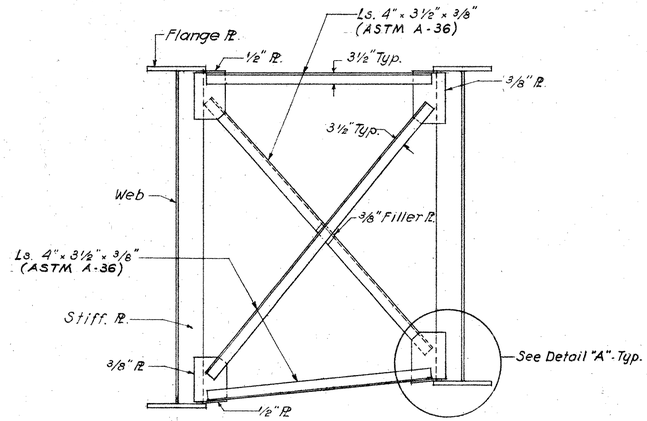

ELEVATION OF D3

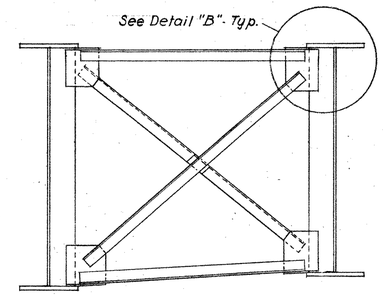

ELEVATION OF D4

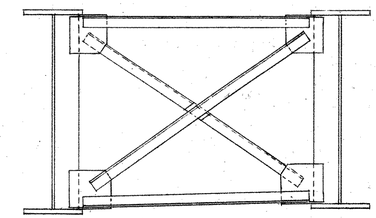

ELEVATION OF D5

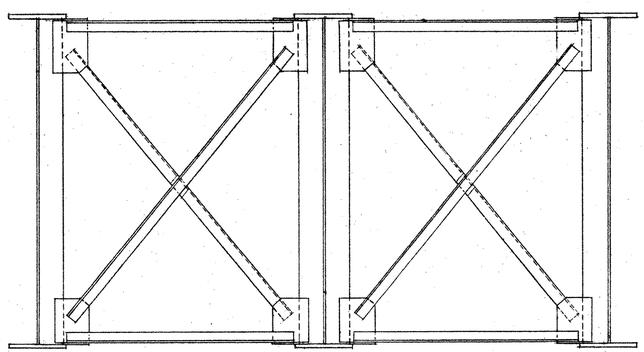

D7 D17 (Wind Bracing not shown)

ELEVATION OF D7 & D17

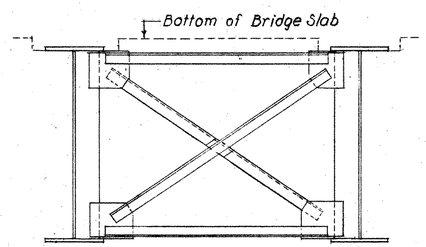

ELEVATION OF D6

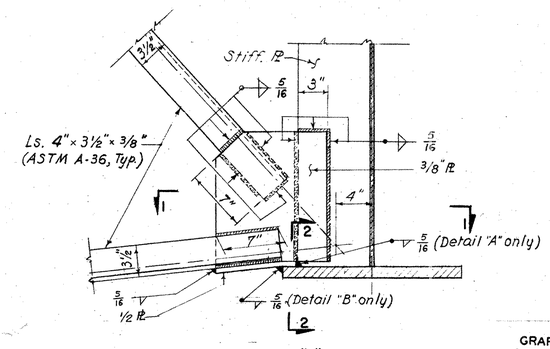

DETAIL "A"

SCALE: 1 1/2" = 1'-0"

Detail "B" similar except as noted

GRAPHIC SCALE 1 1/2" = 1'

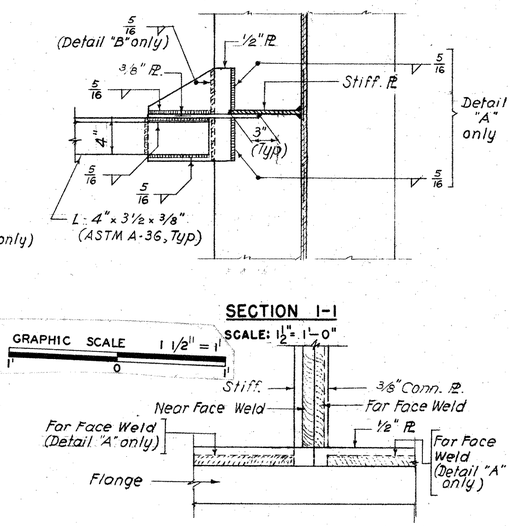

SECTION 1-1

SCALE: 1 1/2" = 1'-0"

GRAPHIC SCALE 1 1/2" = 1'

SECTION 2-2

N.T.S.

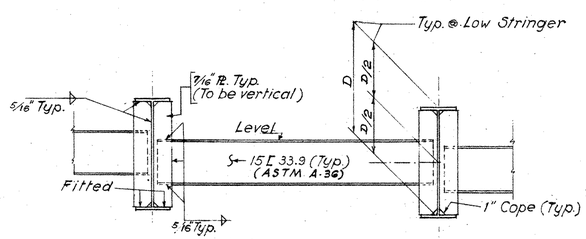

ELEVATION OF D8

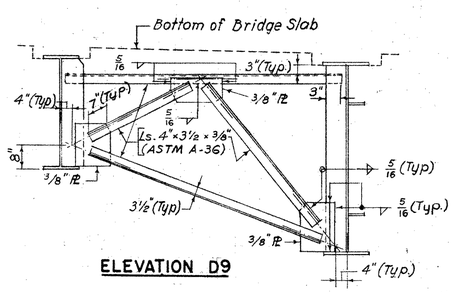

ELEVATION D9

NOTES:

1. "STRUCTURAL STEEL NOTES" AND " WELDING NOTES" SHOWN ON SHEET NO. 25 APPLY.
2. FOR CONNECTIONS OF STIFFENER PLATES TO FLANGE PLATES AND WEB PLATES, SEE SHEET NO. 23.
3. DETAILS "A" AND "B" ARE TYPICAL FOR INTERMEDIATE DIAPHRAGMS EXCEPT WHERE OTHERWISE SHOWN.
4. UNLESS OTHERWISE SHOWN, ALL STEEL SHOWN ON THIS SHEET SHALL BE ASTM A-373.

REVISIONS		
NO.	DATE	DESCRIPTION

CONNECTICUT
STATE HIGHWAY DEPARTMENT
TOWN OF NEW HAVEN
INTERSTATE ROUTE 91
OVER
QUINNIPIAC RIVER
INTERMEDIATE DIAPHRAGMS

DESIGNED BY LEONARD S. WEGMAN CO., CONTRACTING ENGINEER
SCALES 1" = 1'-0" EXCEPT AS NOTED
MADE BY H.G. DATE 4-24-62
CHECKED BY L.P., L.K. DATE 4-24-62
APPROVED [signature] DATE 4-24-62

PROJECT NO. 92-124
BRIDGE SHEET NO. 29 OF 35

92 124

M 258 011

FORM NO. ENG. 15 ED. 11-52

PUB. ROAD DIV. NO.	STATE	TOWN	FED. AID PROJ. NO.	PROJ. NO.	YEAR	ROUTE NO.	SHEET NO.	TOTAL SHEETS
1	CONN.	NEW HAVEN	BRCT-91-1(16)2	92-124	1962	I-91	41	57

GRAPHIC SCALE 1/2" = 1'

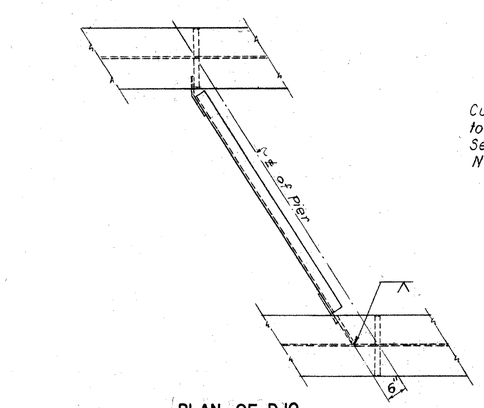

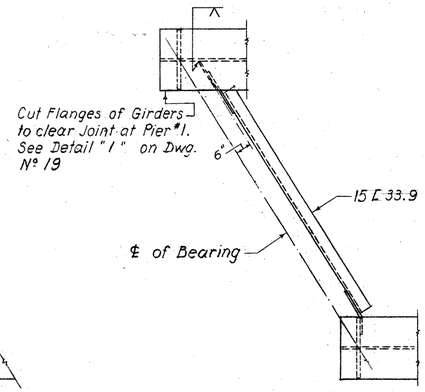

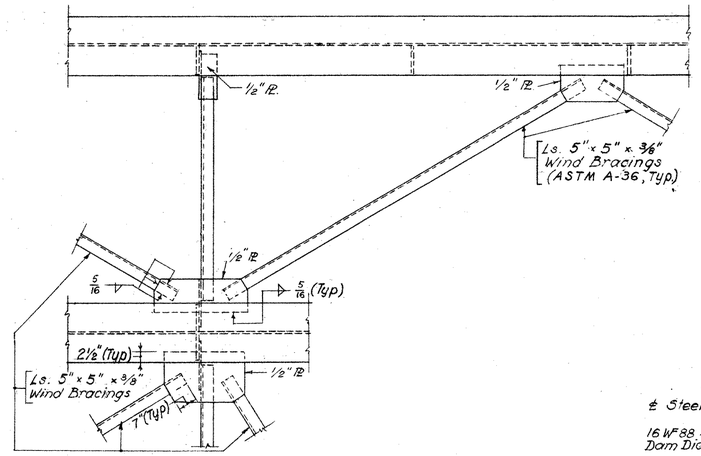

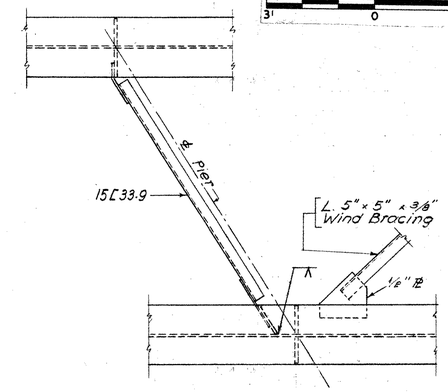

PLAN OF D10

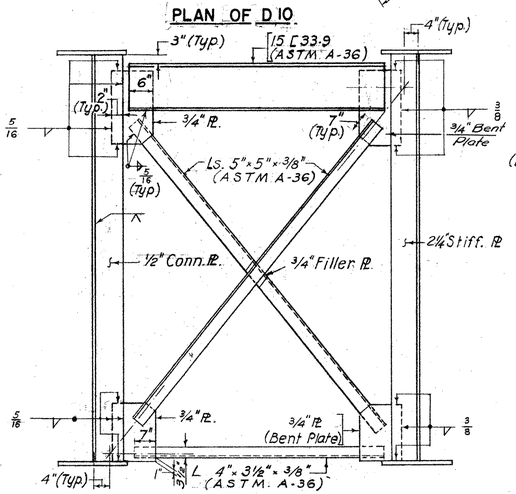

ELEVATION OF D10

PLAN OF D11

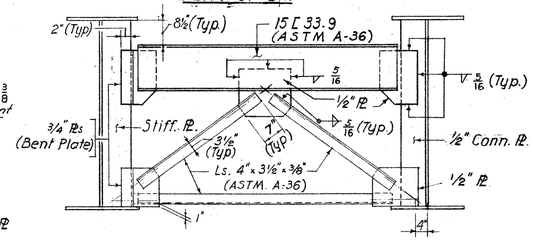

ELEVATION OF D11

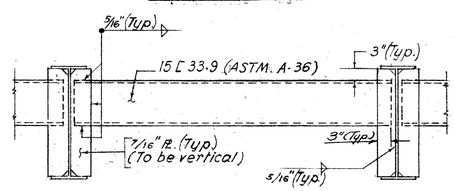

ELEVATION OF INTERIOR D13

PLAN OF WIND BRACING

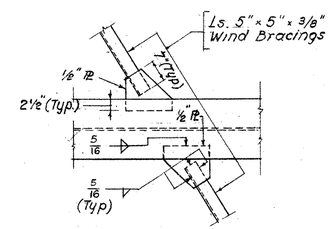

WIND BRACING CONNECTION BETWEEN DIAPHRAGMS

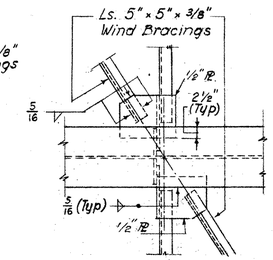

WIND BRACING CONNECTION AT DIAPHRAGMS

WIND BRACING DETAIL

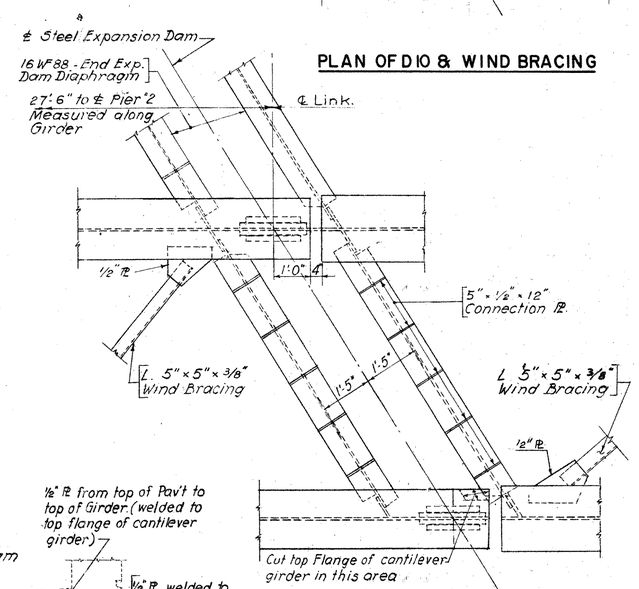

PLAN OF D14 AND WIND BRACING

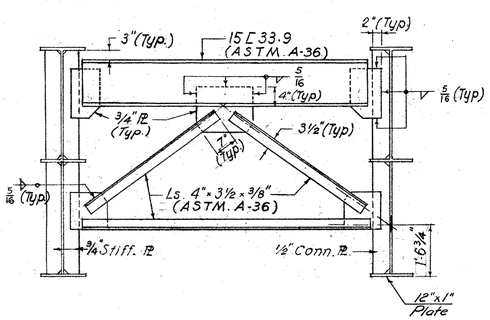

ELEVATION OF D12

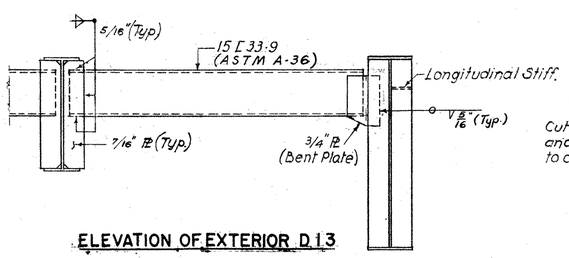

ELEVATION OF EXTERIOR D13

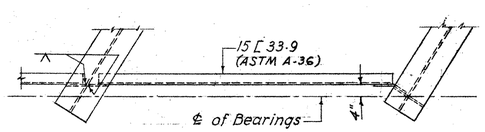

PLAN OF D13

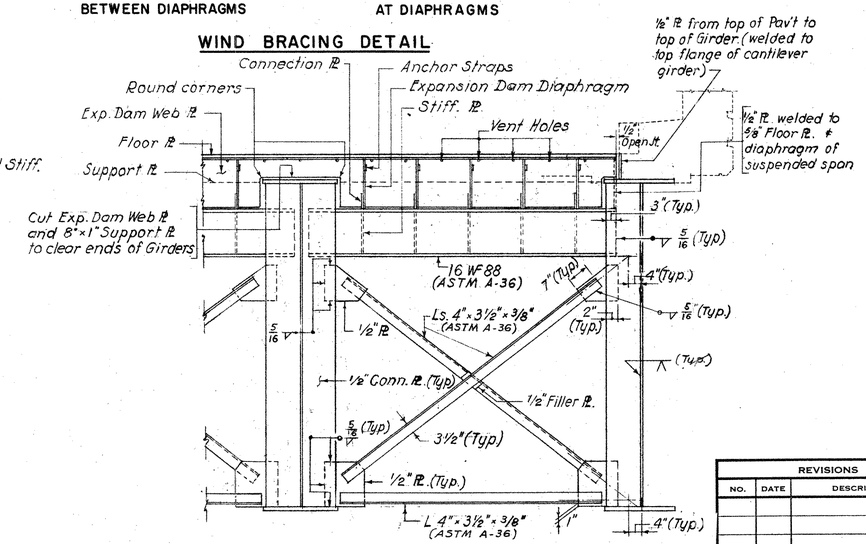

ELEVATION OF D 14

NOTES:

1. "STRUCTURAL STEEL NOTES" AND "WELDING NOTES" SHOWN ON SHEET NO. 25 APPLY.
2. FOR CONNECTIONS OF STIFFENER PLATES TO FLANGE PLATES AND WEB PLATES, SEE SHEET NO 23.
3. UNLESS OTHERWISE NOTED, ALL STEEL SHOWN ON THIS SHEET SHALL BE ASTM A-373.

REVISIONS		
NO.	DATE	DESCRIPTION

CONNECTICUT
STATE HIGHWAY DEPARTMENT
TOWN OF NEW HAVEN
INTERSTATE ROUTE 91
OVER
QUINNIPIAC RIVER
END DIAPHRAGMS

DESIGNED BY LEONARD S. WEGMAN CO., CONTRACTING ENGINEER
SCALES 1" = 1'-0"
MADE BY H.G. DATE 2-24-62
CHECKED BY L.P., L.K. DATE 2-24-62
APPROVED [signature] DATE 2-24-62
PROJECT NO. 92-124
BRIDGE SHEET NO. 30 OF 35

92 124 M 258 011 41 41

FORM NO. ENG. 15 ED. 11-52

PUB. ROAD DIV. NO.	STATE	TOWN	FED. AID PROJ. NO.	PROJ. NO.	YEAR	ROUTE NO.	SHEET NO.	TOTAL SHEETS
1	CONN.	NEW HAVEN	EACI-91-1(16)2	92-124	1962	I-91	42	57

GRAPHIC SCALE 1/2" = 1'
3' 0 3'

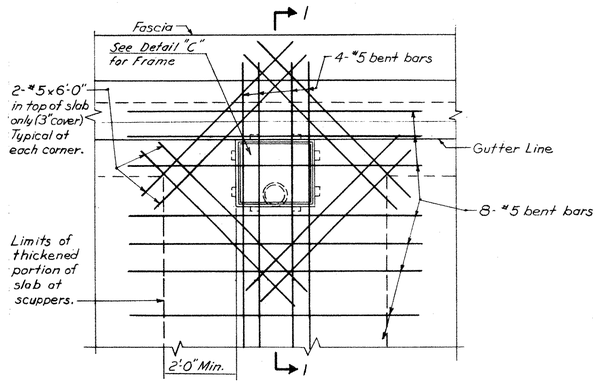

PLAN

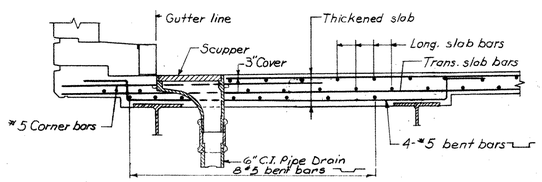

SECTION 1-1
N. T. S.

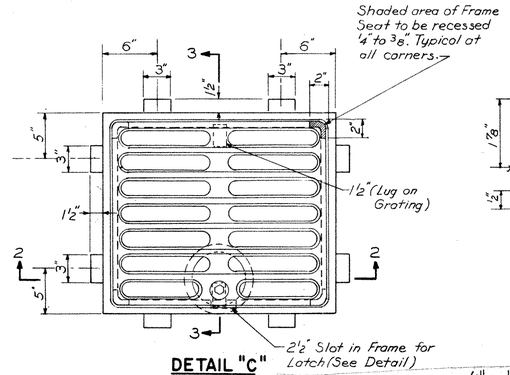

DETAIL "C"
SCALE: 1 1/2" = 1'-0"

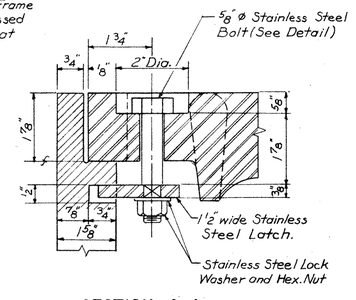

SECTION 4-4

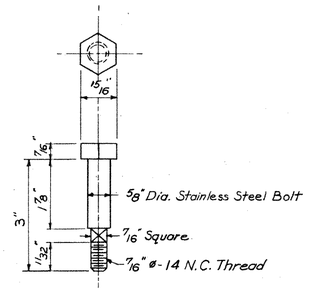

BOLT DETAIL

GRAPHIC SCALE 1 1/2" = 1'
1' 0 1'

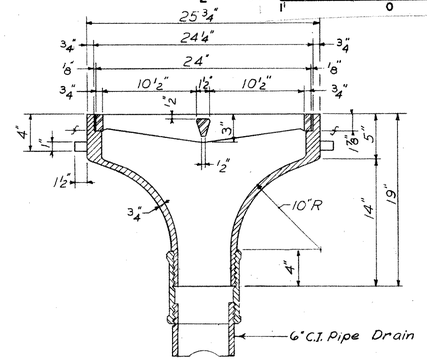

SECTION 2-2
SCALE: 1 1/2" = 1'-0"

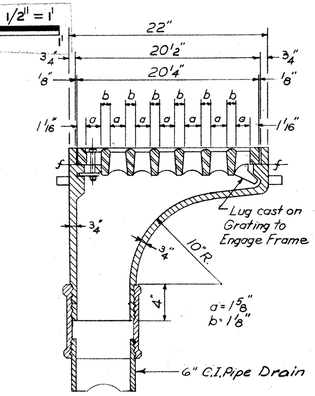

SECTION 3-3
SCALE: 1 1/2" = 1'-0"

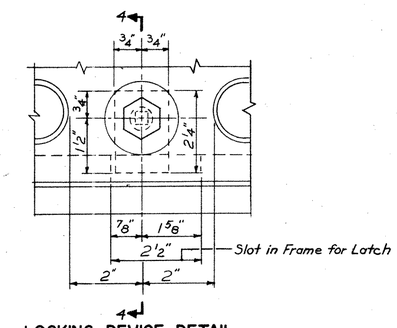

LOCKING DEVICE DETAIL

GRAPHIC SCALE 1 1/2" = 1'
1' 0 1'

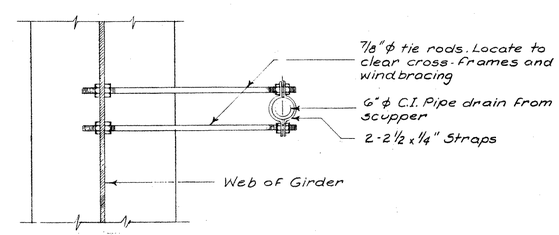

PLAN

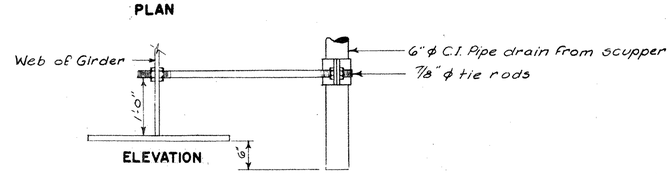

ELEVATION

TYPICAL SCUPPER DRAIN BRACE
N.T.S.

NOTES:

1. FOR LOCATION OF SCUPPERS SEE SHEET NO. 3
2. SCUPPERS SHALL BE SET TO GRADE AND CROSS-SLOPE.
3. ALL TRANSVERSE AND LONGITUDINAL SLAB BARS IN THE VICINITY OF THE SCUPPERS SHALL BE CONTINUOUS WHEREVER POSSIBLE.
4. GRATINGS SHALL BE MADE FROM CASTINGS OF CARBON STEEL OR MALLEABLE IRON. FRAMES SHALL BE MADE FROM CASTINGS OF CARBON STEEL, MALLEABLE IRON, OR GRAY IRON.
5. BEARING SURFACES OF FRAME AND GRATING TO BE MACHINED.

REVISIONS		
NO.	DATE	DESCRIPTION

CONNECTICUT
STATE HIGHWAY DEPARTMENT

TOWN OF NEW HAVEN
INTERSTATE ROUTE 91 OVER QUINNIPIAC RIVER
SCUPPER DETAILS

DESIGNED BY LEONARD S. WEGMAN CO., CONTRACTING ENGINEER
SCALES 1/2" = 1'-0" EXCEPT AS NOTED
MADE BY H.A.E. DATE 4-24-62
CHECKED BY L.K. DATE 4-24-62
APPROVED [signature] DATE 4-24-62
PROJECT NO. 92-124
BRIDGE SHEET NO. 31 OF 35

92 124
M258 01
42

FORM NO. ENG. 15 ED. 11-52

PUB. ROAD DIV. NO.	STATE	TOWN	FED. AID PROJ. NO.	PROJ. NO.	YEAR	ROUTE NO.	SHEET NO.	TOTAL SHEETS
1	CONN.	NEW HAVEN	BRDGE-91-1(162)	92-124	1962	I-91	43	57

GRAPHIC SCALE 1 1/2" = 1'

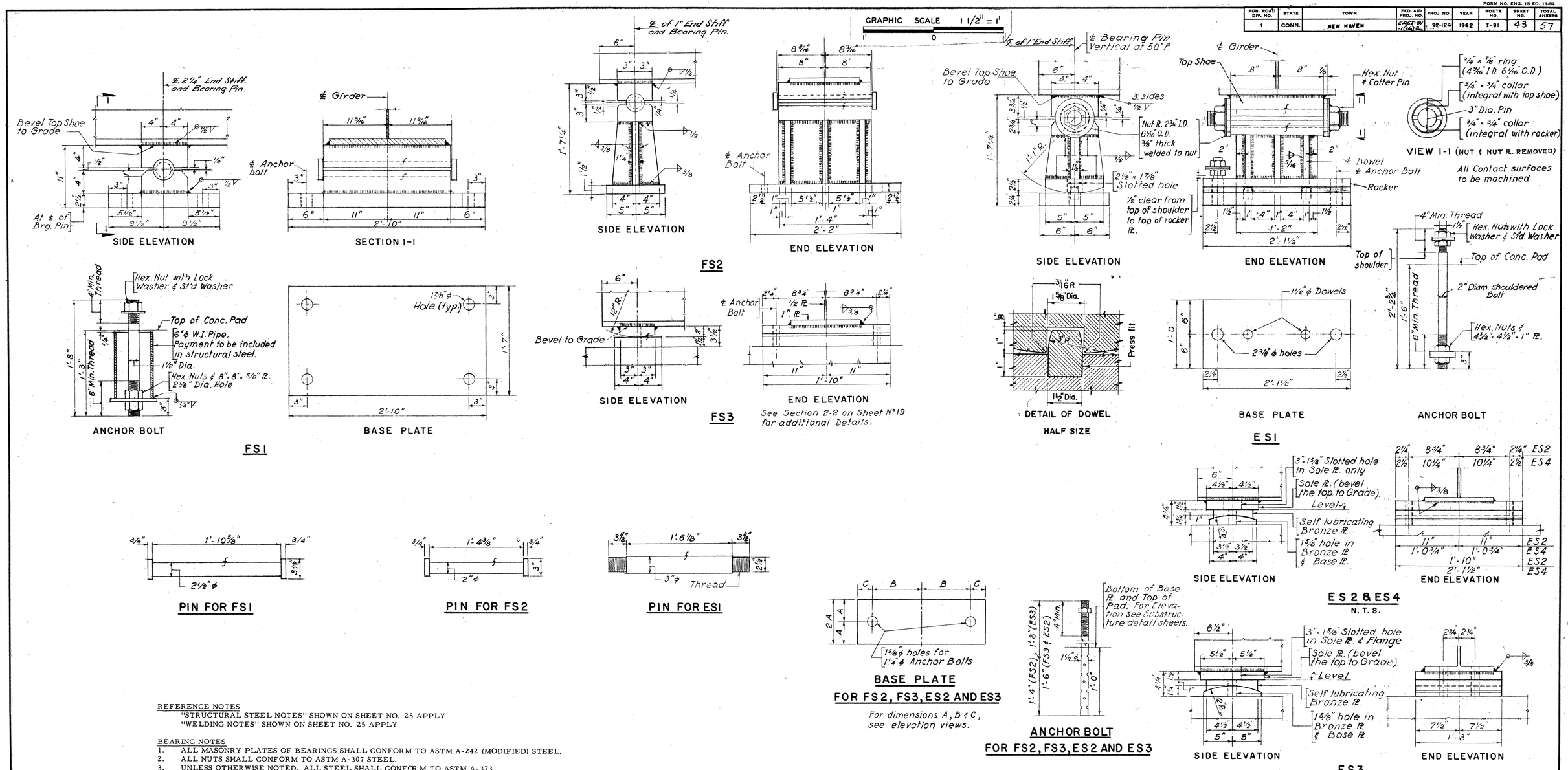

REFERENCE NOTES

"STRUCTURAL STEEL NOTES" SHOWN ON SHEET NO. 25 APPLY
"WELDING NOTES" SHOWN ON SHEET NO. 25 APPLY

BEARING NOTES

1. ALL MASONRY PLATES OF BEARINGS SHALL CONFORM TO ASTM A-242 (MODIFIED) STEEL.
2. ALL NUTS SHALL CONFORM TO ASTM A-307 STEEL.
3. UNLESS OTHERWISE NOTED, ALL STEEL SHALL CONFORM TO ASTM A-373.
4. SEE SPECIAL PROVISIONS FOR "STRUCTURAL STEEL" FOR ADDITIONAL INFORMATION PERTAINING TO THE ASTM DESIGNATIONS OF STEEL SPECIFIED IN NOTES 1 TO 4
5. PAYMENT FOR ALL MATERIAL USED IN BEARINGS SHALL BE MADE AT THE UNIT PRICE FOR STRUCTURAL STEEL.
6. NUTS OF ANCHOR BOLTS FOR FIXED BEARINGS MARK FS3 AND EXPANSION BEARINGS MARK ES2, ES3 AND ES4 SHALL BE TIGHTENED IN ACCORDANCE WITH THE FOLLOWING PROCEDURE:
   (a) DRAW THE NUT UP FINGER TIGHT AND BACK OFF 1/8 TURN
   (b) BURR OFF THE THREADS OF ANCHOR BOLT AT FACE OF NUT WITH A POINTED TOOL.
7. ANCHOR BOLTS OF EXPANSION BEARINGS MARK ES2, ES3 AND ES4 TO BE SET AT CENTER OF THE SLOT AT 50° F.
8. THE 1'-6" LONG PORTION OF BOTTOM FLANGE OF STRINGER OR GIRDER OVER THE BEARINGS TO BE TRULY AT RIGHT ANGLE TO WEB.
9. STEEL FOR PINS: PIN TO BE ASTM A-235* OR ASTM A-108 (GRADE 1016 TO 1030 INCL.) WITH A MINIMUM ROCKWELL SCALE B HARDNESS OF 80.

*(Class C1)

REVISIONS		
NO.	DATE	DESCRIPTION

CONNECTICUT
STATE HIGHWAY DEPARTMENT
TOWN OF NEW HAVEN
INTERSTATE ROUTE 91
OVER
QUINNIPIAC RIVER
BEARINGS

DESIGNED BY LEONARD S. WEGMAN CO., CONTRACTING ENGINEER
SCALES 1½" = 1'-0" EXCEPT AS NOTED
MADE BY H.G., L.P. DATE 4-24-62
CHECKED BY H.A.E., L.K. DATE 4-24-62
APPROVED [signature] DATE 4-24-62
PROJECT NO. 92-124
BRIDGE SHEET NO. 32 OF 35

92 124

M 258 01

FORM NO. ENG. 15 ED. 11-52

PUB. ROAD DIV. NO.	STATE	TOWN	FED. AID PROJ. NO.	PROJ. NO.	YEAR	ROUTE NO.	SHEET NO.	TOTAL SHEETS
1	CONN.	NEW HAVEN		92-124	1962	I-91	44	56

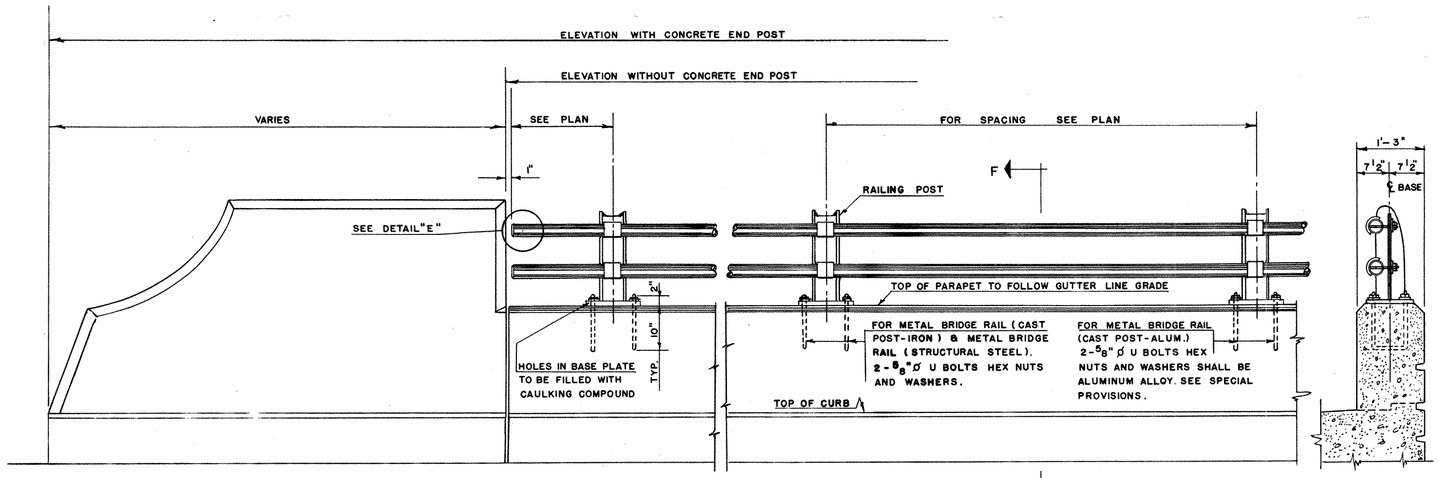

ELEVATION
CONC. END POST AND RAIL
SCALE 3/4" = 1'-0"

SECTION F-F
SCALE 3/4" = 1'-0"

GRAPHIC SCALE 3/4" = 1'
2' 0 2'

METAL BRIDGE RAIL
(STRUCTURAL STEEL)

ALL POSTS TO BE 6 WF 20 STRUCTURAL STEEL.
ALL RAILS TO BE 2 1/2"ø STANDARD STEEL PIPE.
RAILING POSTS SHALL BE VERTICAL.
IF NECESSARY SHIM WITH LEAD WOOL AND CAULK. COST TO BE INCLUDED IN ITEM METAL BRIDGE RAIL.(STRUCTURAL STEEL.)
FOR PAINTING SEE SPECIAL PROVISIONS.
ALL POSTS & BASE PLATES TO BE OF STRUCTURAL STEEL CONFORMING TO A.S.T.M. A-7.

METAL BRIDGE RAIL
(CAST POST - IRON)

ALL POSTS TO BE MALLEABLE IRON CASTING CONFORMING TO A.S.T.M. A-47 GRADE 35018 OR DUCTILE IRON CASTING CONFORMING TO A.S.T.M. A-339.
ALL RAILS TO BE 2 1/2"ø STANDARD STEEL PIPE.
RAILING POSTS SHALL BE VERTICAL.
IF NECESSARY SHIM WITH LEAD WOOL AND CAULK. COST TO BE INCLUDED IN ITEM METAL BRIDGE RAIL (CAST POST-IRON.).
FOR PAINTING SEE SPECIAL PROVISIONS.

METAL BRIDGE RAIL
(CAST POST - ALUMINUM)

ALL POSTS TO BE CAST OF ALUMINUM. SEE SPECIAL PROVISION.
ALL RAILS TO BE 3" O.D. X 2.625" I.D. ALUMINUM TUBING. SEE SPECIAL PROVISIONS.
RAILING POSTS SHALL BE VERTICAL.
IF NECESSARY SHIM WITH ALUMINUM SHEETS AND CAULK.
COST TO BE INCLUDED IN ITEM METAL BRIDGE RAIL (CAST POST-ALUM.)
ALUMINUM RAILING AND POSTS SHALL NOT BE PAINTED.

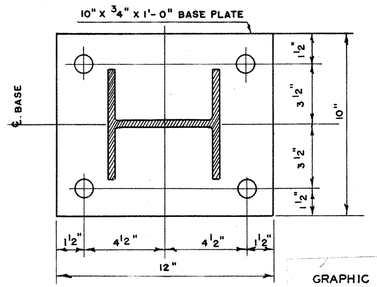

SECTION B-B
SCALE 3" = 1'-0"

GRAPHIC SCALE 3" = 1'
6" 0 6"

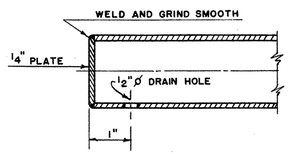

DETAIL "E"
NOT TO SCALE

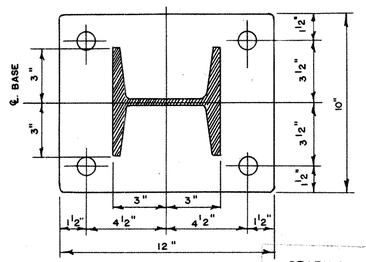

SECTION C-C
SCALE 3" = 1'-0"

GRAPHIC SCALE 3" = 1'
6" 0 6"

GENERAL NOTES:

UNLESS OTHERWISE SPECIFIED ON THE PLANS OR IN THE SPECIAL PROVISIONS METAL BRIDGE RAIL MAY BE: METAL BRIDGE RAIL (STRUCTURAL STEEL). METAL BRIDGE RAIL (CAST POST-IRON) OR METAL BRIDGE RAIL (CAST POST-ALUMINUM).
COST OF FURNISHING AND SETTING 5/8"ø U BOLTS, HEX NUTS AND WASHERS TO BE INCLUDED IN ITEM "METAL BRIDGE RAIL."

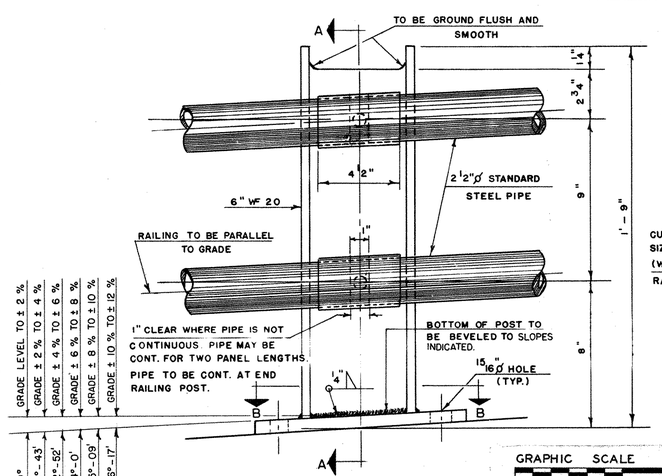

ELEVATION OF POST
SCALE 3" = 1'-0"

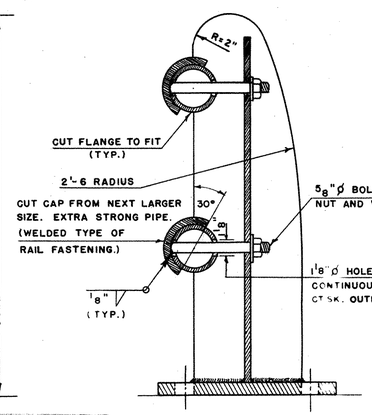

SECTION A-A
SCALE 3" = 1'-0

GRAPHIC SCALE 3" = 1'
6" 0 6"

DETAILS
STRUCTURAL STEEL POST
FOR METAL BRIDGE RAIL (STUCTURAL STEEL)

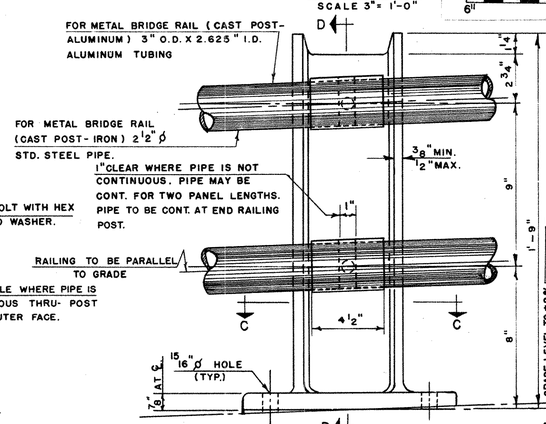

ELEVATION OF POST
SCALE 3" = 1'-0"

GRAPHIC SCALE 3" = 1'
6" 0 6"

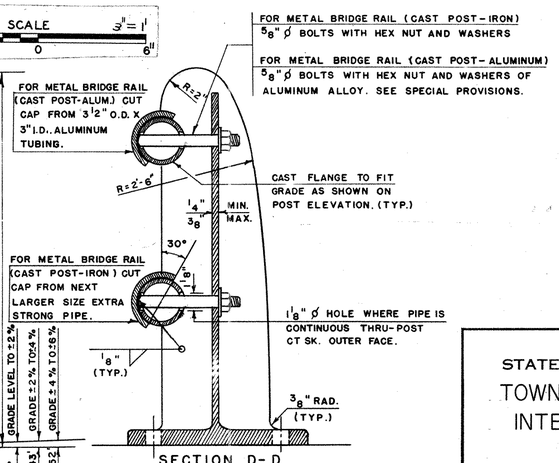

SECTION D-D
SCALE 3" = 1'-0"

NOTE

DETAILS OF METAL BRIDGE RAILING AND FASTENING SIMILAR TO DETAILS SHOWN FOR METAL BRIDGE RAILING. (STRUCTURAL STEEL.)

DETAILS
CAST POST
FOR METAL BRIDGE RAIL (CAST POST-IRON) AND FOR METAL BRIDGE RAIL (CAST POST-ALUMINUM)

REVISIONS		
NO.	DATE	DESCRIPTION

CONNECTICUT
STATE HIGHWAY DEPARTMENT
TOWN OF NEW HAVEN
INTERSTATE ROUTE 91
OVER
QUINNIPIAC RIVER
METAL BRIDGE RAIL

DESIGNED BY C.H.D.
SCALES AS NOTED
MADE BY G.M.K. & G.J.Z. DATE 4-29-60
CHECKED BY J.F.C. DATE 10/29/60
APPROVED V. F. Lagan DATE 10/29/60
PROJECT NO. 92-124
BRIDGE SHEET NO. 33 OF 35

"ARCHRIGHT" TRACING CLOTH JOSEPH MERRITT & CO. 11310

92 124

M258 01

FORM NO. ENG. 15 ED. 11-52

PUB. ROAD DIV. NO.	STATE	TOWN	FED. AID PROJ. NO.	PROJ. NO.	YEAR	ROUTE NO.	SHEET NO.	TOTAL SHEETS
1	CONN.	NEW HAVEN	BRF-L-91 (26)2	92-124	1962	I-91	45	57

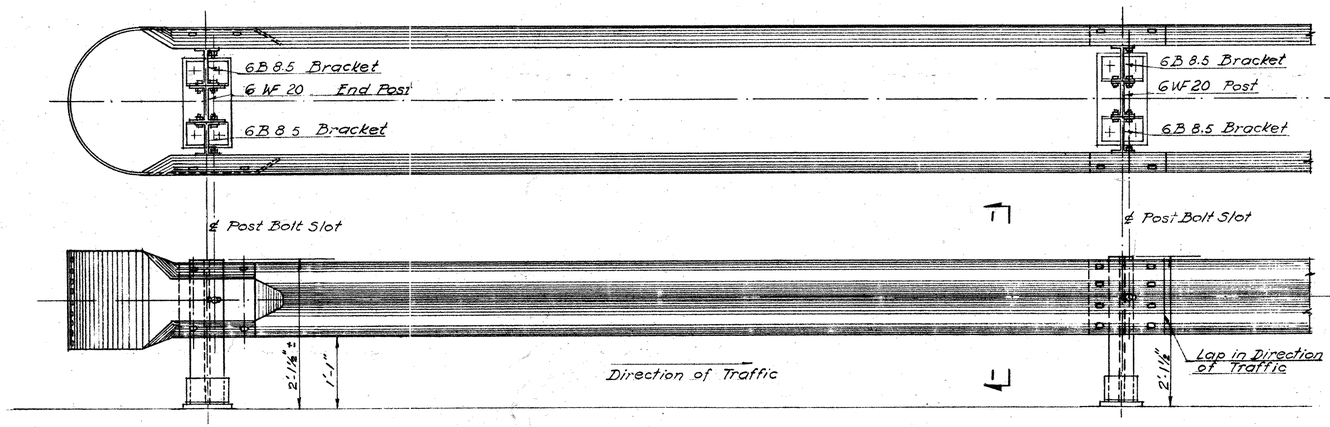

ELEVATION

SCALE: 1" = 1'-0"

GRAPHIC SCALE 1" = 1' (2' 0 2')

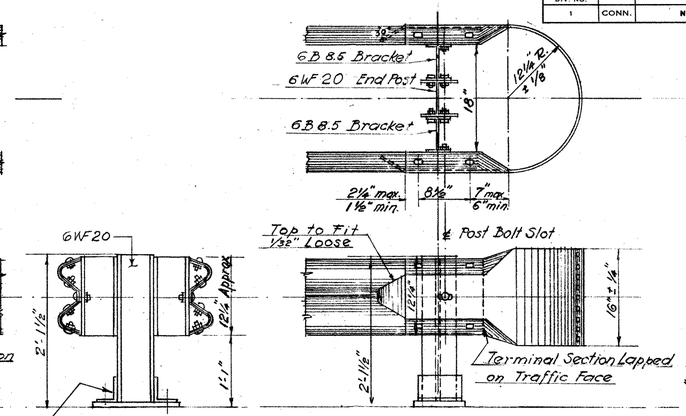

TERMINAL SECTION

SCALE: 1" = 1'-0"

GRAPHIC SCALE 1" = 1' (2' 0 2')

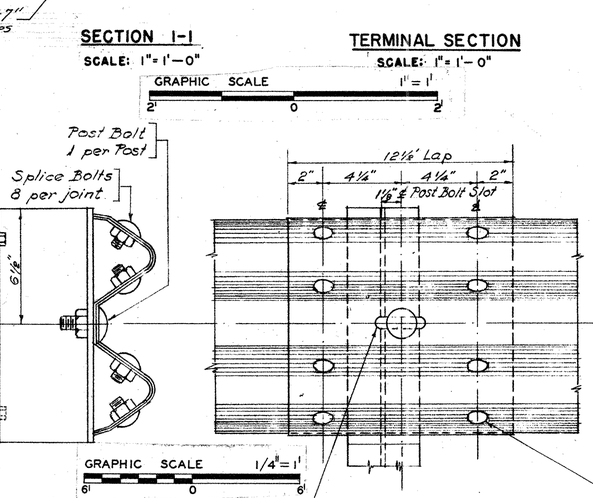

SECTION I-I

SCALE: 1" = 1'-0"

GRAPHIC SCALE 1" = 1' (2' 0 2')

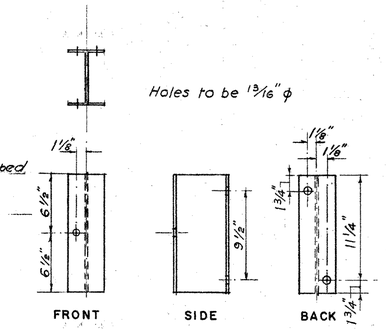

BRACKET FOR POSTS

SCALE: 1½" = 1'-0"

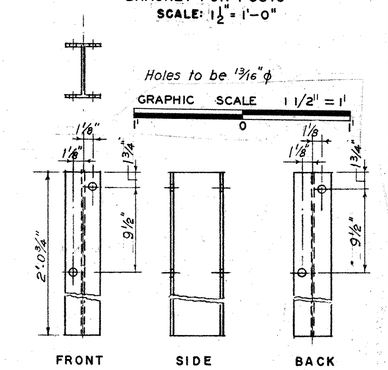

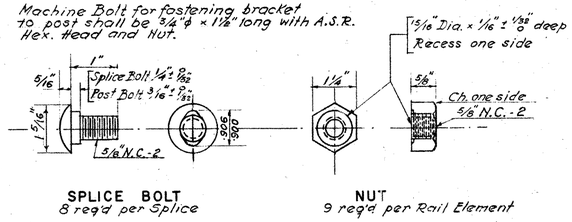

SPLICE BOLT
8 req'd per Splice

NUT
9 req'd per Rail Element

POST BOLT
Same except length 1 req'd per post
Std. length: 1½"

Note: After Galvanizing, the nut must be free running fit on the bolt.

BOLTS & NUTS

N.T.S.

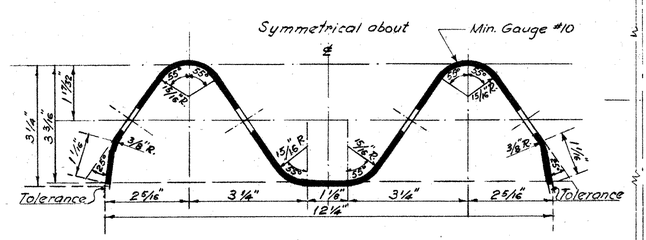

SECTION THRU RAIL ELEMENT

HALF SIZE

GRAPHIC SCALE 6" = 1' (3" 0 3")

SECTION THRU RAIL SPLICE

SCALE: 3" = 1'-0"

GRAPHIC SCALE 3" = 1' (6" 0 6")

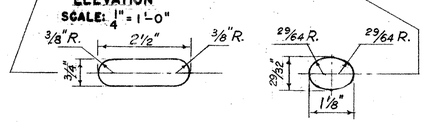

ELEVATION
SCALE: ¼" = 1'-0"

POST BOLT SLOT
HALF SIZE

SPLICE BOLT SLOT
HALF SIZE

GRAPHIC SCALE 6" = 1' (3" 0 3")

RAIL SPLICE

GRAPHIC SCALE 1" = 1' (2' 0 2')

DETAIL SHOWING LOCATION OF HOLES FOR ATTACHING BRACKETS TO RAIL POSTS

SCALE: 1½" = 1'-0"

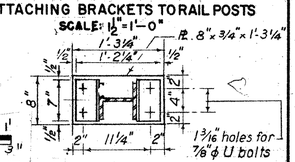

BASE PLATE & ANCHORAGE

SCALE: 1" = 1'-0"

POST DETAILS

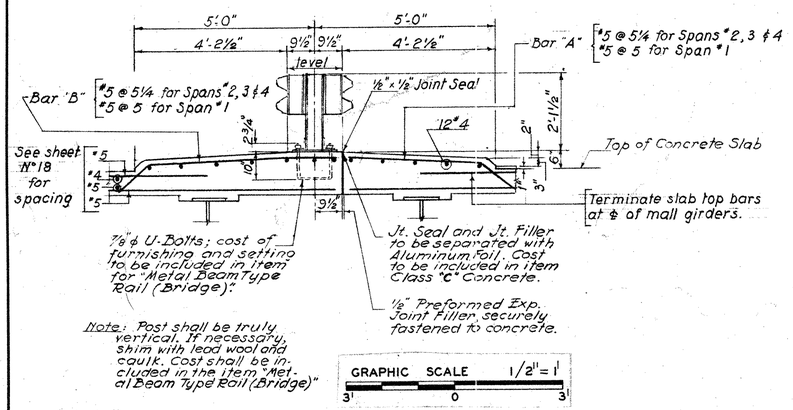

Note: Post shall be truly vertical. If necessary, shim with lead wool and caulk. Cost shall be included in the item "Metal Beam Type Rail (Bridge)"

GRAPHIC SCALE 1/2" = 1' (3' 0 3')

BARRIER MEDIAN SECTION

SCALE: ½" = 1'-0"

REVISIONS		
NO.	DATE	DESCRIPTION
△	10/9/62	Added size of ⊔

CONNECTICUT
STATE HIGHWAY DEPARTMENT

TOWN OF NEW HAVEN
INTERSTATE ROUTE 91
OVER
QUINNIPIAC RIVER
METAL BEAM TYPE RAIL (BRIDGE)

DESIGNED BY LEONARD S. WEGMAN CO., CONTRACTING ENGINEER
SCALES AS NOTED
MADE BY H.G. DATE 4-24-62
CHECKED BY L.K. DATE 4-24-62
APPROVED [signature] DATE 4-24-62
PROJECT NO. 92-124
BRIDGE SHEET NO. 34 OF 35

092 124
M 258 01

PUB. ROAD DIV NO.	STATE	TOWN	FED AID PROJ. NO.	PROJ NO.	YEAR	ROUTE NO.	SHEET NO.	TOTAL SHEETS
1	CONN.	NEW HAVEN	I-207-01 (118)2	92-124	1962	I-91	46	57

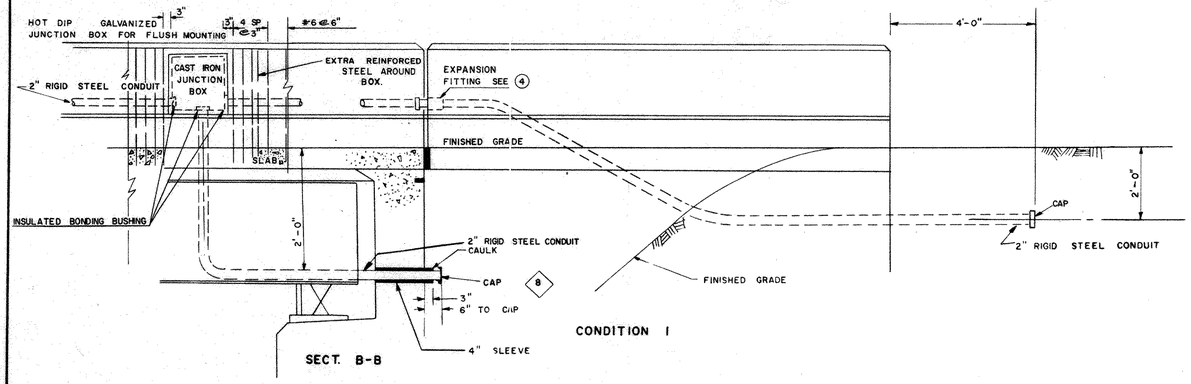

CONDUIT PARAPET TO FILL 3

SCALE 1/2" = 1'-0"

GRAPHIC SCALE 1/2" = 1'

3' 0 3'

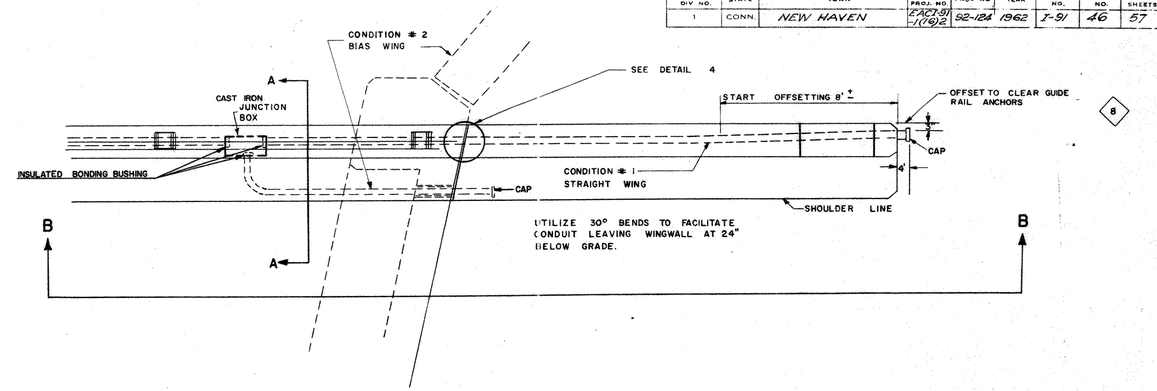

CONDUIT PARAPET TO FILL 1

NOT TO SCALE

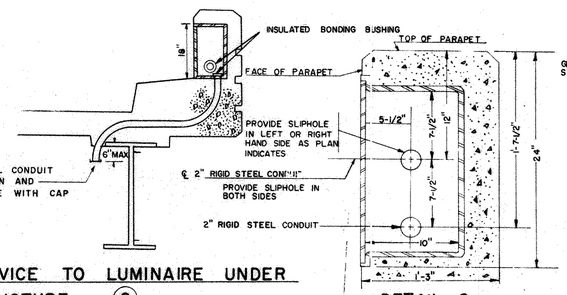

SERVICE TO LUMINAIRE UNDER STRUCTURE 6

NOT TO SCALE

DETAIL 2

18" X 18" X 10" JUNCTION BOX FOR LIGHT STANDARD

NOT TO SCALE

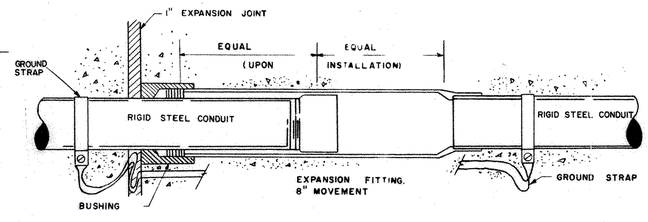

DETAIL OF EXPANSION FITTING 4

USE AT ALL EXPANSION JOINTS

NOT TO SCALE

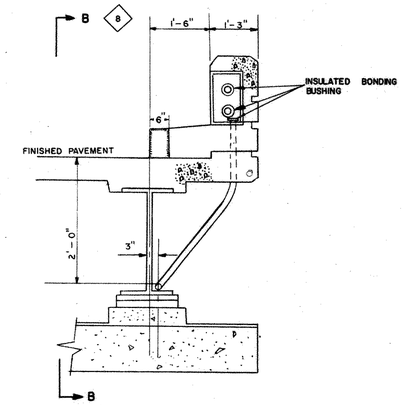

SECT A-A

NOT TO SCALE

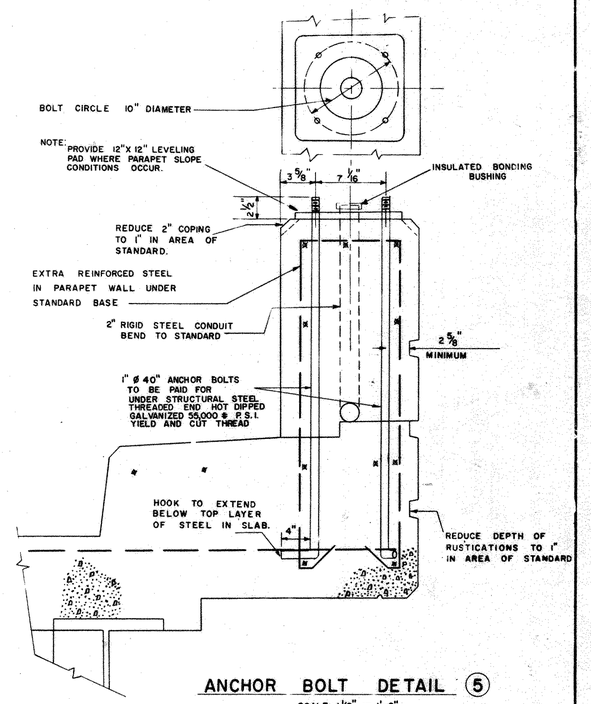

ANCHOR BOLT DETAIL 5

SCALE 1 1/2" = 1'-0"

GRAPHIC SCALE 1 1/2" = 1'

1' 0 1'

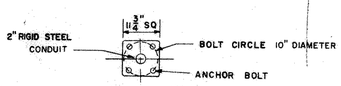

PLAN OF BASE

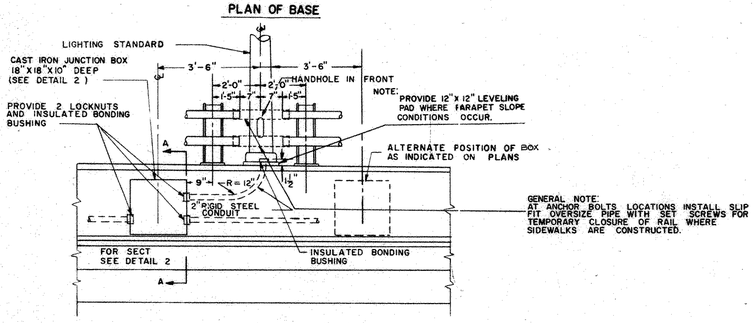

DETAIL 1

LIGHTING STANDARD ON PARAPET WALL, TYPICAL

NOT TO SCALE

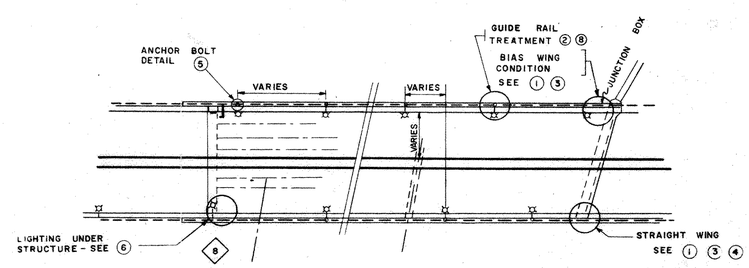

INDEX TO DETAILS

NOT TO SCALE

THE INFORMATION, INCLUDING ESTIMATED QUANTITIES OF WORK, SHOWN ON THESE SHEETS IS BASED ON LIMITED INVESTIGATIONS BY THE STATE AND IS IN NO WAY WARRANTED TO INDICATE THE TRUE CONDITIONS OR ACTUAL QUANTITIES OR DISTRIBUTION OF QUANTITIES OF WORK WHICH WILL BE REQUIRED.

REVISIONS		
NO.	DATE	DESCRIPTION

CONNECTICUT
STATE HIGHWAY DEPARTMENT

TOWN OF NEW HAVEN
INTERSTATE ROUTE 91
OVER
QUINNIPIAC RIVER
ELECTRICAL DETAILS

SCALE AS NOTED	ELECTRICAL		PROJECT NO. 92-124
DESIGNED BY	C. W. JOHNSON	3/1/61	
MADE BY	R. E. WENTWORTH	3/1/61	
SUBMITTED BY	H. A. KERR	3/1/61	BRIDGE SH. NO. 35 of 35
APPROVED BY	R. M. Wallace	3-1-61	

92 124 M 258 01 46 C-203

CROSS SECTIONS

SCALE 1 INCH = 10 FEET

FORM NO. ENG. 14 ED. 7-46

PUB. ROAD DIV. NO.	STATE	TOWN	FED. AID PROJ. NO.	PROJ. NO.	YEAR	ROUTE NO.	SHEET NO.	TOTAL SHEETS
1	CONN.	New Haven	EACI-91-1(16)2	92-124	1962	I-91	47	57

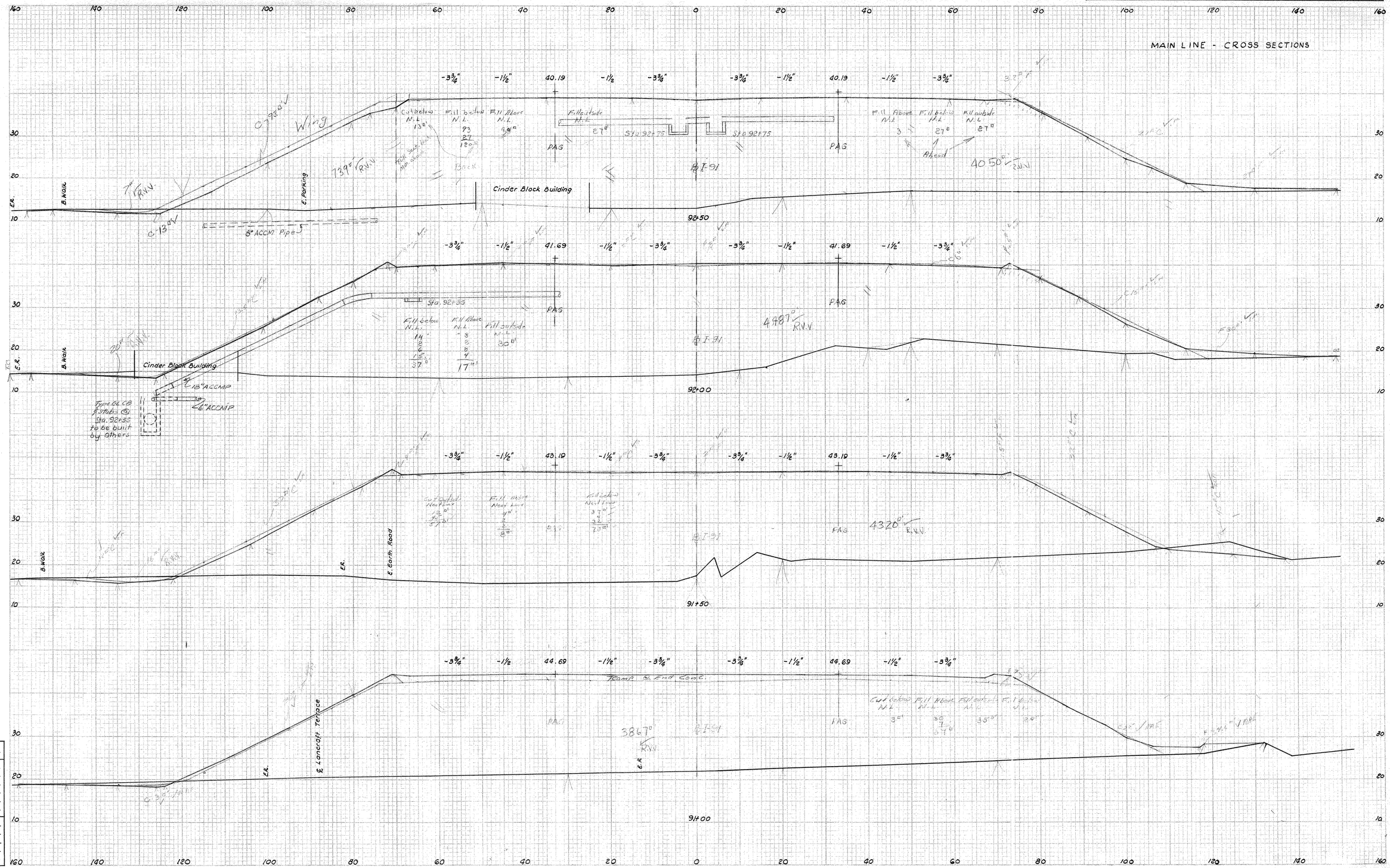

NOTE BOOK NO. 92-11-C

Ground Surface Plotted by R.E.F. 1-7-60
" " Checked by GFB 1-9-60
Template Sections Plotted by LSW. Co. '60, '62
" " Checked by " " "
Areas by LSW. Co. 1960, 1962
" Checked by " " "

Final Sections Plotted by
" " Checked by
Final Areas by
" " Checked by
Quantity Transferred and Inked by

"ARKWRIGHT" TRACING CLOTH JOSEPH MERRITT & CO. 64972

92 124

M 258 01

47

FORM NO. ENG. 14 ED. 7-46

PUB. ROAD DIV. NO.	STATE	TOWN	FED. AID PROJ. NO.	PROJ. NO.	YEAR	ROUTE NO.	SHEET NO.	TOTAL SHEETS
1	CONN.	New Haven	EACT-91-1(16)2	92-124	1962	I-91	48	57

CROSS SECTIONS

SCALE 1 INCH = 10 FEET

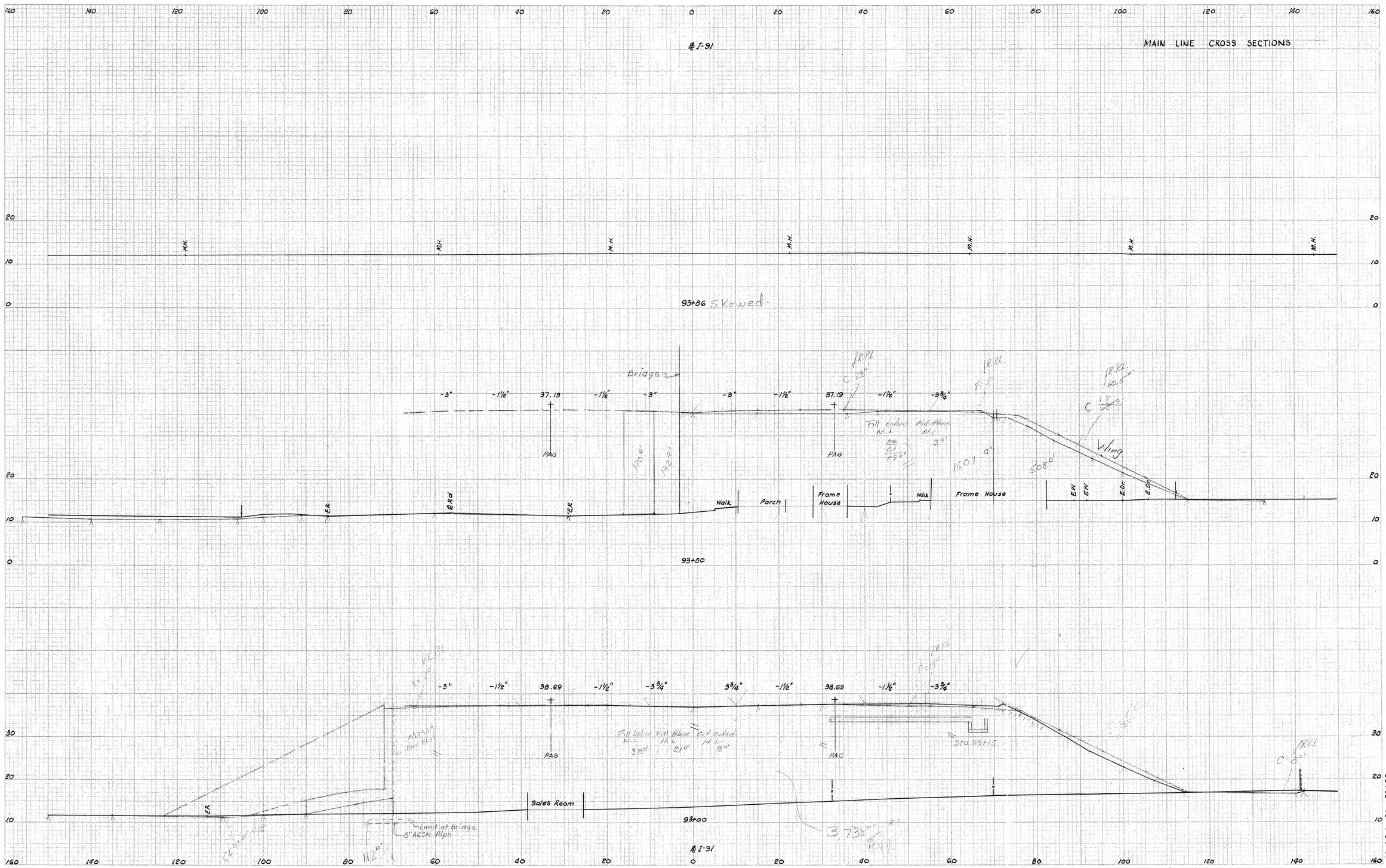

NOTE BOOK NO. 92-111-C

Ground Surface Plotted by R.E.F. 1-7-60
" " Checked by G.F.B. 1-9-60
Template Sections Plotted by L.S.W.Co. '60-'62
" " Checked by " " "
Areas by L.S.W.Co. 1960-1962
" Checked by " " "

Final Sections Plotted by
" " Checked by
Final Areas by
" " Checked by
Quantity Transferred and Inked by

"ARKWRIGHT" TRACING CLOTH JOSEPH MERRITT & CO. 64372

92 124

M 258 01

48

CROSS SECTIONS

SCALE 1 INCH = 10 FEET

FORM NO. ENG. 14 ED. 7-46

PUB. ROAD DIV. NO.	STATE	TOWN	FED. AID PROJ. NO.	PROJ. NO.	YEAR	ROUTE NO.	SHEET NO.	TOTAL SHEETS
1	CONN.	New Haven	EACI-91 -1(162)	92-124	1962	I-91	49	57

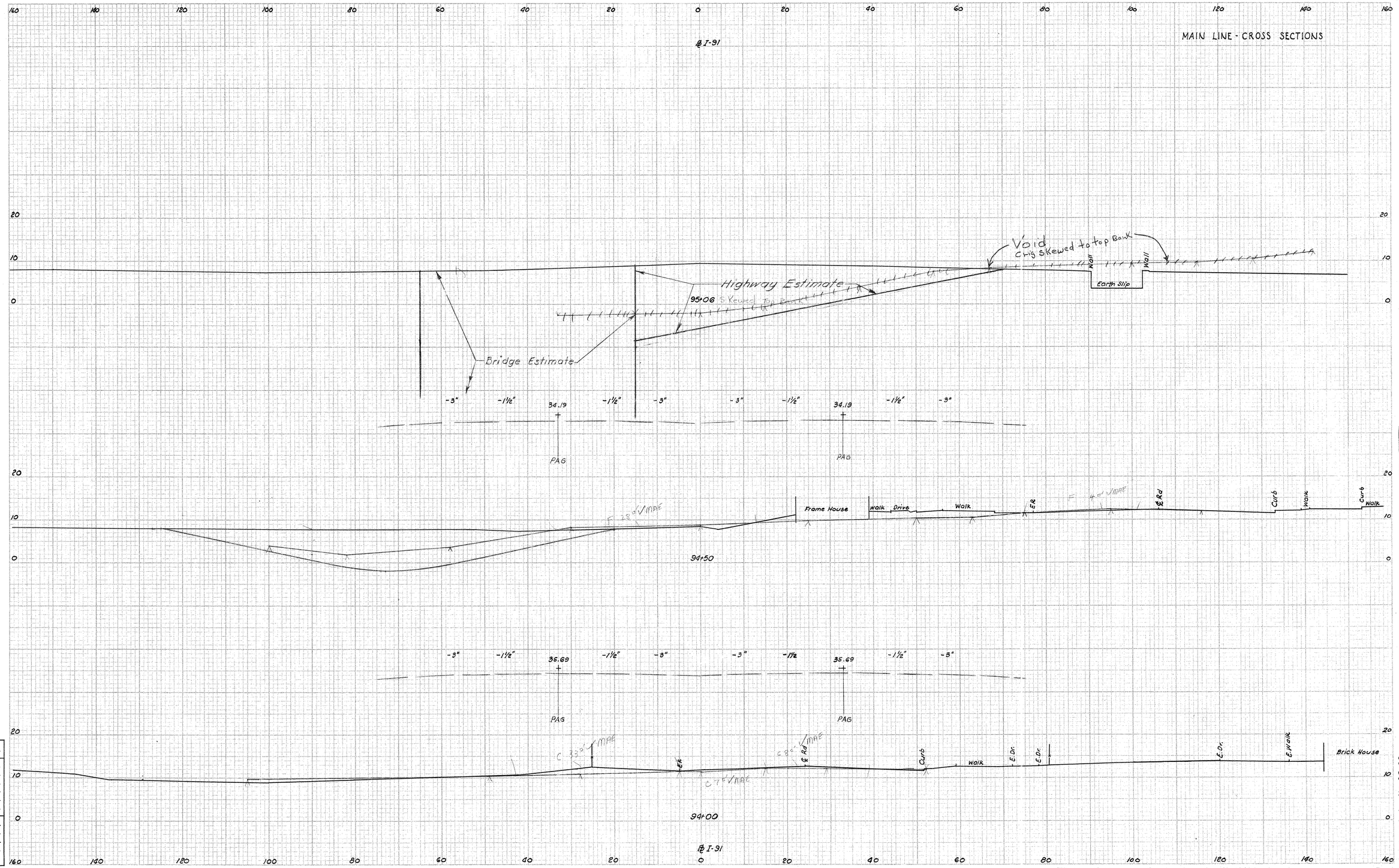

NOTE BOOK NO. 92-111-C
Ground Surface Plotted by R.E.F. 1-9-60
" " Checked by G.F.B 1-9-60
Template Sections Plotted by LSW Co. '60-'62
" " Checked by " " "
Areas by LSW Co. 1960-1962
" Checked by " " "
Final Sections Plotted by
" " Checked by
Final Areas by
" " Checked by
Quantity Transferred and Inked by

"ARKWRIGHT" TRACING CLOTH JOSEPH MERRITT & CO. 64872

92 - 124

M 258 01

CROSS SECTIONS

SCALE 1 INCH = 10 FEET

FORM NO. ENG. 14 ED. 7-46

PUB. ROAD DIV. NO.	STATE	TOWN	FED. AID PROJ. NO.	PROJ. NO.	YEAR	ROUTE NO.	SHEET NO.	TOTAL SHEETS
1	CONN.	New Haven	EACI-91-1(76)2	92-124	1962	I-91	50	57

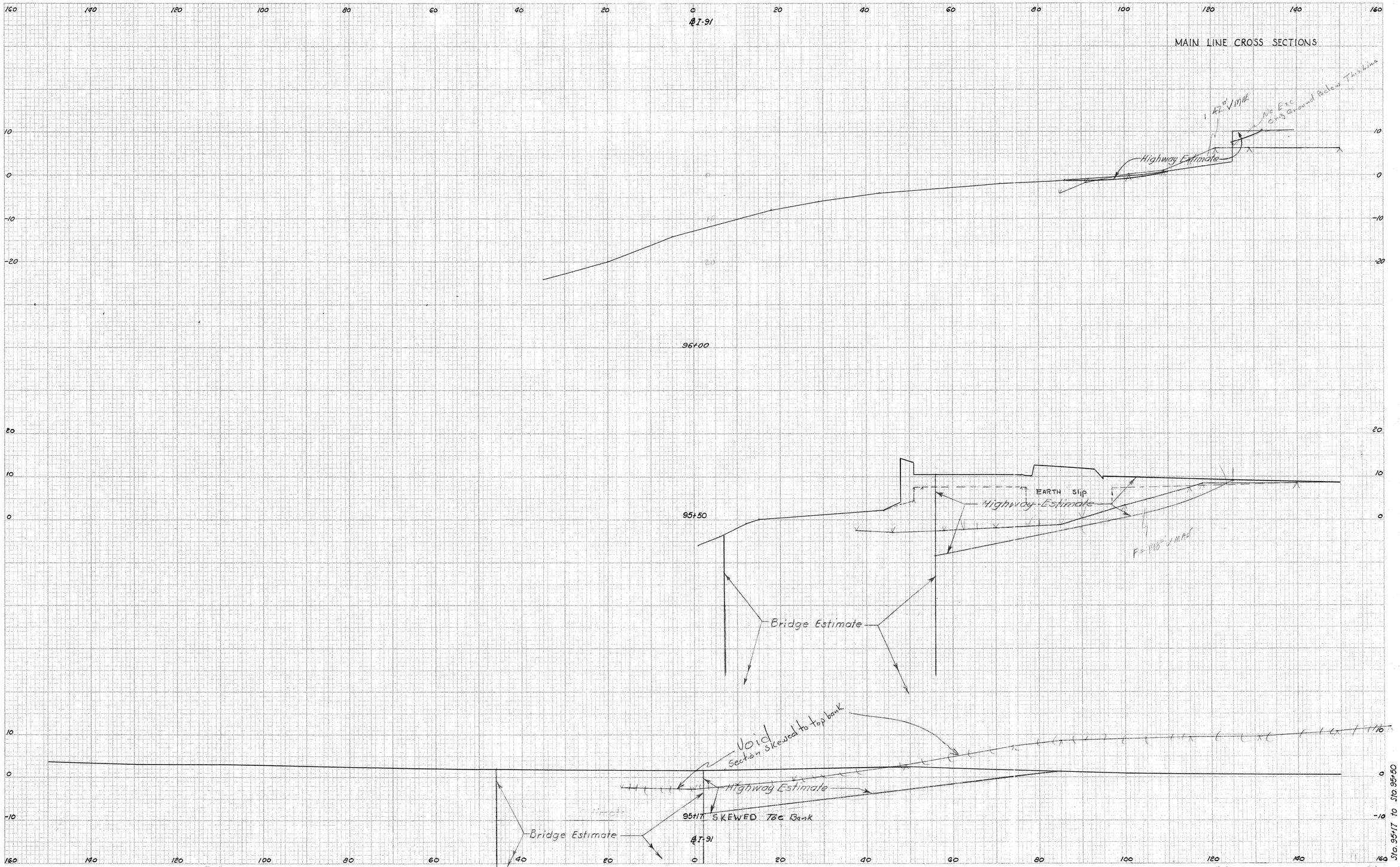

NOTE BOOK NO. 92-111-K

Ground Surface Plotted by REF 2-2-60
" " Checked by CHH 2-3-60
Template Sections Plotted by L.S.W.Co. 60-62
" " Checked by " 60-62
Areas by L.S.W.Co 1960-1962
" Checked by " " "

Final Sections Plotted by
" " Checked by
Final Areas by
" " Checked by
Quantity Transferred and Inked by

"ARKWRIGHT" TRACING CLOTH JOSEPH MERRITT & CO. 64372

92-124

M258 01

50

CROSS SECTIONS

SCALE 1 INCH = 10 FEET

FORM NO. ENG. 14 ED. 6-60

PUB. ROAD DIV. NO.	STATE	TOWN	FED. AID PROJ. NO.	PROJ. NO.	YEAR	ROUTE NO.	SHEET NO.	TOTAL SHEETS
1	CONN.	New Haven	EACT-91-1(16)2	92-124	1962	I-91	51	57

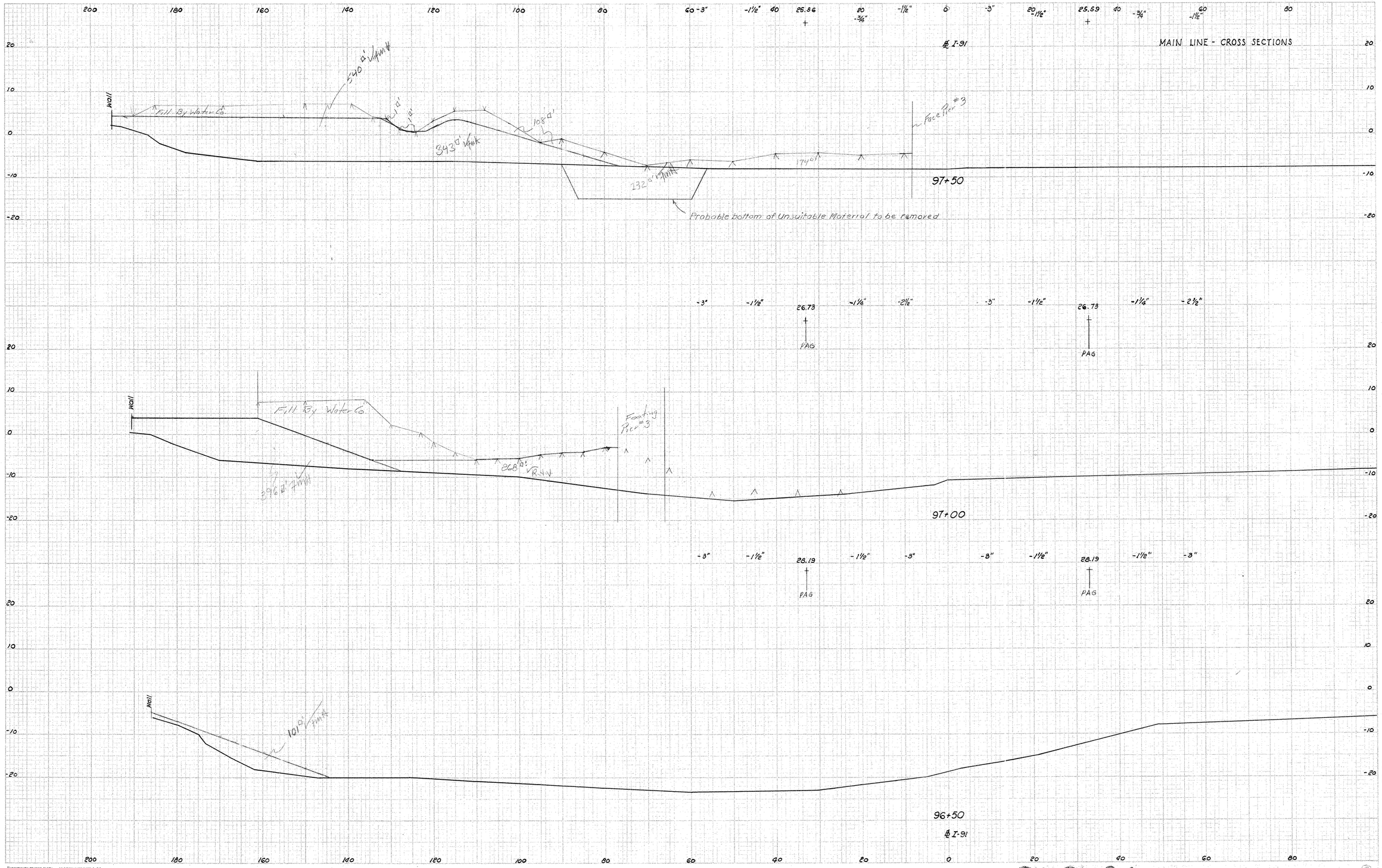

NOTE BOOK NO.

Ground Surface Plotted by L.S.W.Co. 11-23-60
" " Checked by " 1960 - 1962
Template Sections Plotted by " 11-24-60
" " Checked by " 1960-1962
Areas by L.S.W. Co. 1960-1962
" Checked by " " "

Final Sections Plotted by
" " Checked by
Final Areas by
" " Checked by
Quantity Transferred by

"ARKWRIGHT" TRACING CLOTH JOSEPH MERRITT & CO. 66669

92 124

M 258 01

51

FORM NO. ENG. 14 ED. 6-60

PUB. ROAD DIV. NO.	STATE	TOWN	FED. AID PROJ. NO.	PROJ. NO.	YEAR	ROUTE NO.	SHEET NO.	TOTAL SHEETS
1	CONN.	New Haven	EACI-91-1 (16)2	92-124	1962	I-91	52	57

CROSS SECTIONS

SCALE 1 INCH = 10 FEET

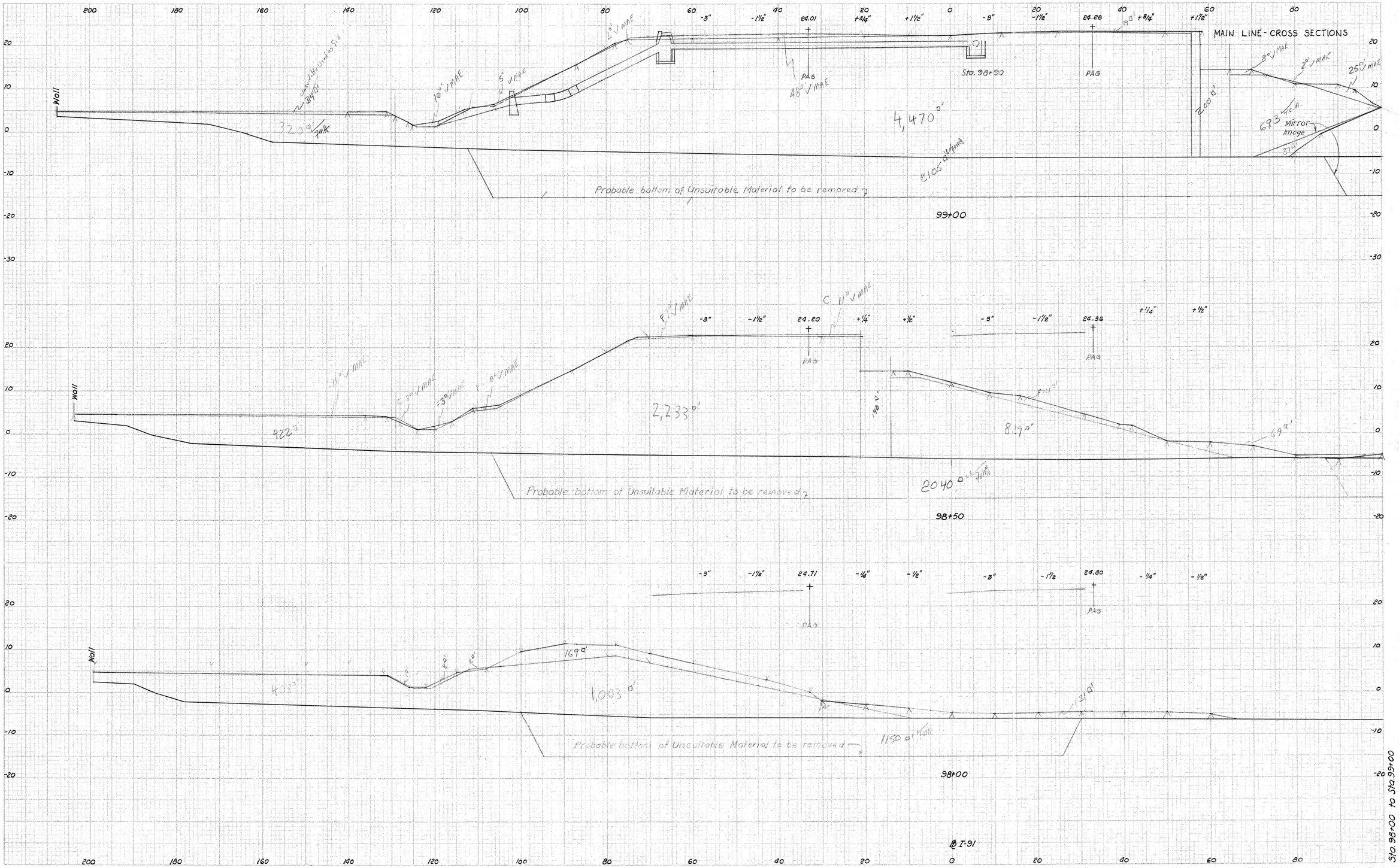

NOTE BOOK NO.	
Ground Surface Plotted by	L.S.W. Co. 11-23-60
" " Checked by	" " 60-62
Template Sections Plotted by	" " 11-24-60
" " Checked by	" 1960-1962
Areas by	L.S.W. Co. 1960-1962
" Checked by	" " " "
Final Sections Plotted by	
" " Checked by	
Final Areas by	
" " Checked by	
Quantity Transferred by	

"ARKWRIGHT" TRACING CLOTH JOSEPH MERRITT & CO. 66669

92 124

M 258 01

52

CROSS SECTIONS

SCALE 1 INCH = 10 FEET

FORM NO. ENG. 14 ED. 7-46

PUB. ROAD DIV. NO.	STATE	TOWN	FED. AID PROJ. NO.	PROJ. NO.	YEAR	ROUTE NO.	SHEET NO.	TOTAL SHEETS
1	CONN.	New Haven	EACI-91-1(16)2	92-124	1962	I-91	53	57

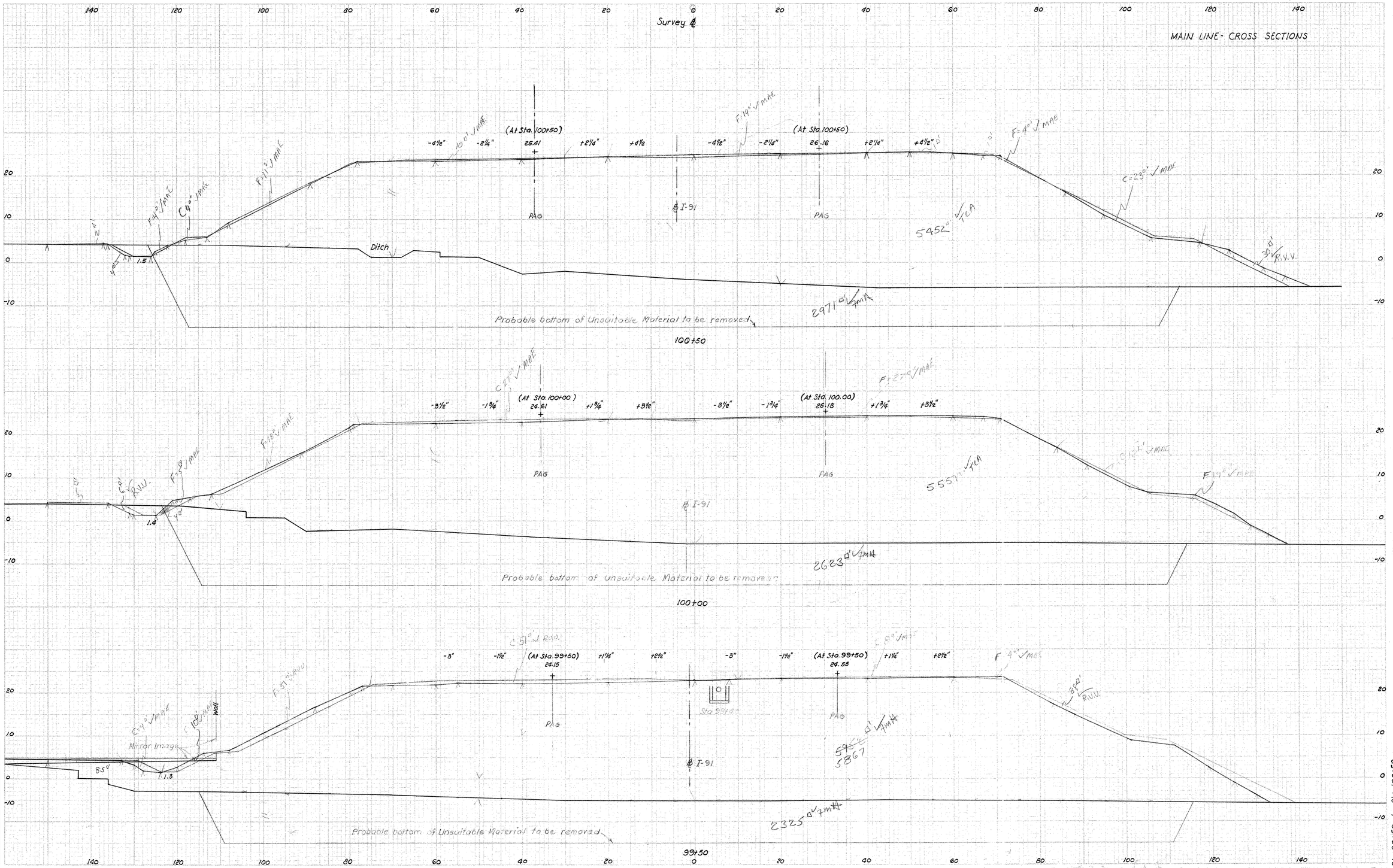

NOTE BOOK NO. 92-111-K

Ground Surface Plotted by R.E.F. 2-2-60
" " Checked by CHH. 2-3-60
Template Sections Plotted by L.S.W.Co. 60-62
" " Checked by " " " "
Areas by L.S.W.Co. 1960-1962
" Checked by " " "

Final Sections Plotted by
" " Checked by
Final Areas by
" " Checked by
Quantity Transferred and Inked by

"ARKWRIGHT" TRACING CLOTH JOSEPH MERRITT & CO. 64372

92 124

M 258 01

53

CROSS SECTIONS

SCALE 1 INCH = 10 FEET

FORM NO. ENG. 14 ED. 7-46

PUB. ROAD DIV. NO.	STATE	TOWN	FED. AID PROJ. NO.	PROJ. NO.	YEAR	ROUTE NO.	SHEET NO.	TOTAL SHEETS
1	CONN.	New Haven	I-91-1(26)2	92-124	1962	I-91	54	57

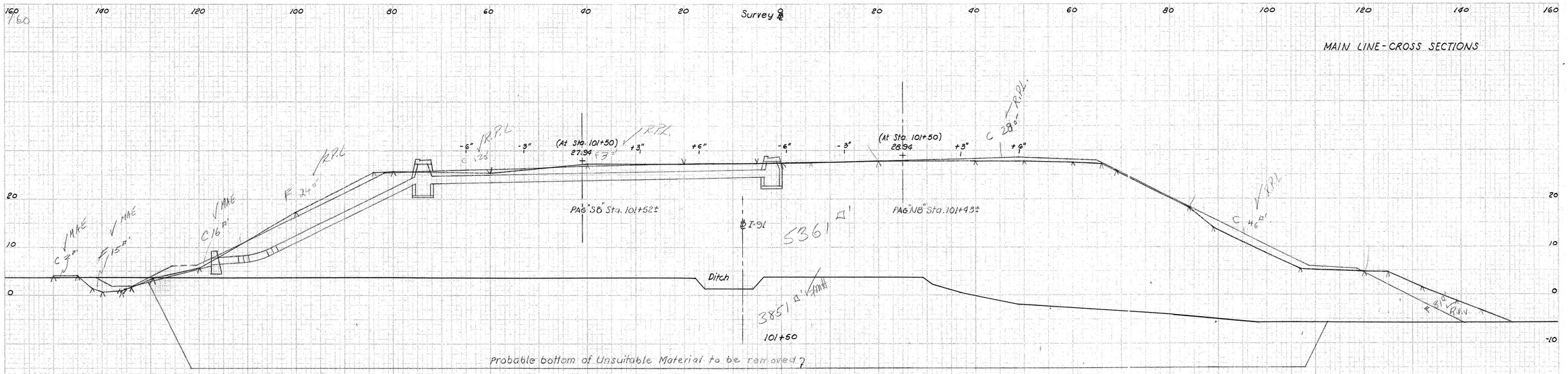

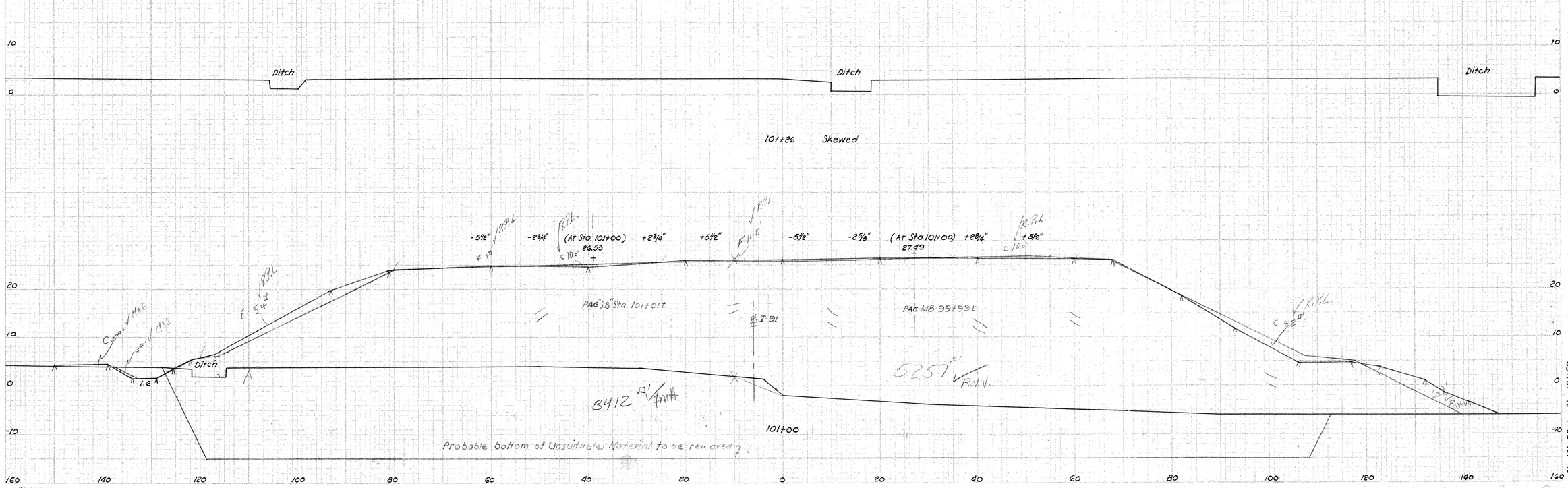

NOTE BOOK NO. 92-11-C&K
Ground Surface Plotted by R.E.F. 2-2-60
" " Checked by CHH 2-3-60
Template Sections Plotted by L.S.W.Co. '60, '62
" " Checked by " " " "
Areas by L.S.W. Co. 1960-1962
" Checked by " " " "
Final Sections Plotted by
" " Checked by
Final Areas by
" " Checked by
Quantity Transferred and Inked by

"ARWRIGHT" TRACING CLOTH JOSEPH MERRITT & CO. 64372

62 124

M 258 01

54

Sta. 101+00 to Sta. 101+50

CROSS SECTIONS

SCALE 1 INCH = 10 FEET

FORM NO. ENG. 14 ED. 7-46

PUB. ROAD DIV. NO.	STATE	TOWN	FED. AID PROJ. NO.	PROJ. NO.	YEAR	ROUTE NO.	SHEET NO.	TOTAL SHEETS
1	CONN.	New Haven	EACI-91-1(16)2	92-124	1962	I-91	55	57

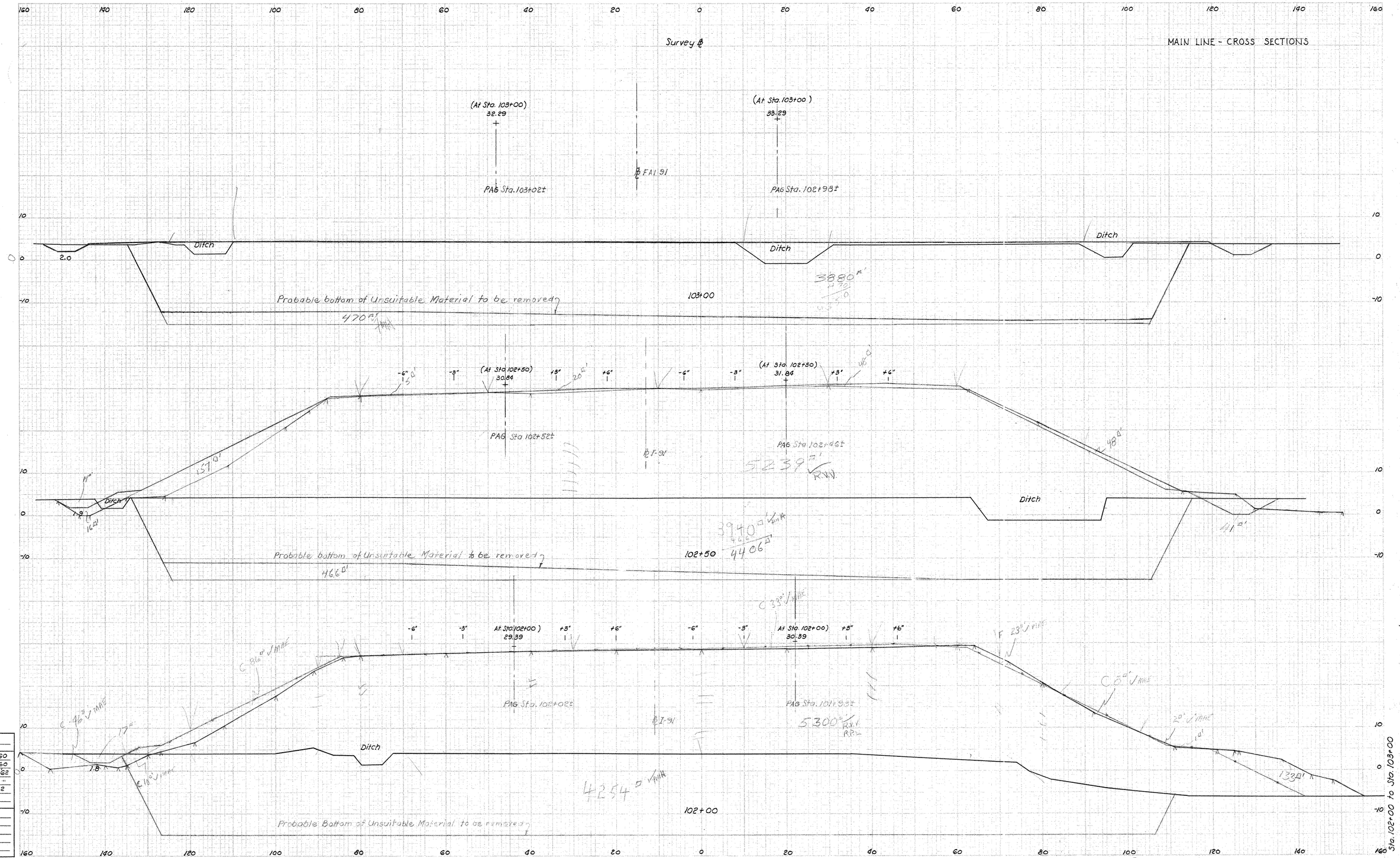

NOTE BOOK NO. 92-11-C

Ground Surface Plotted by R.E.F. 1.9.60
" " Checked by G.F.B. 1-9-60
Template Sections Plotted by L.S.W. Co. 60-62
" " Checked by " " " "
Areas by L.S.W. Co. 1960-1962
" Checked by " " " "

Final Sections Plotted by
" " Checked by
Final Areas by
" " Checked by
Quantity Transferred and Inked by

"ARCWRIGHT" TRACING CLOTH JOSEPH MERRITT & CO. 64972

92 124

M 258 01

55

CROSS SECTIONS

SCALE 1 INCH = 10 FEET

FORM NO. ENG. 14 ED. 6-60

PUB. ROAD DIV. NO.	STATE	TOWN	FED. AID PROJ. NO.	PROJ. NO.	YEAR	ROUTE NO.	SHEET NO.	TOTAL SHEETS
1	CONN.	New Haven	EACI-91-1(6)2	92-124	1962	I-91	56	57

MAIN LINE - CROSS SECTIONS

293

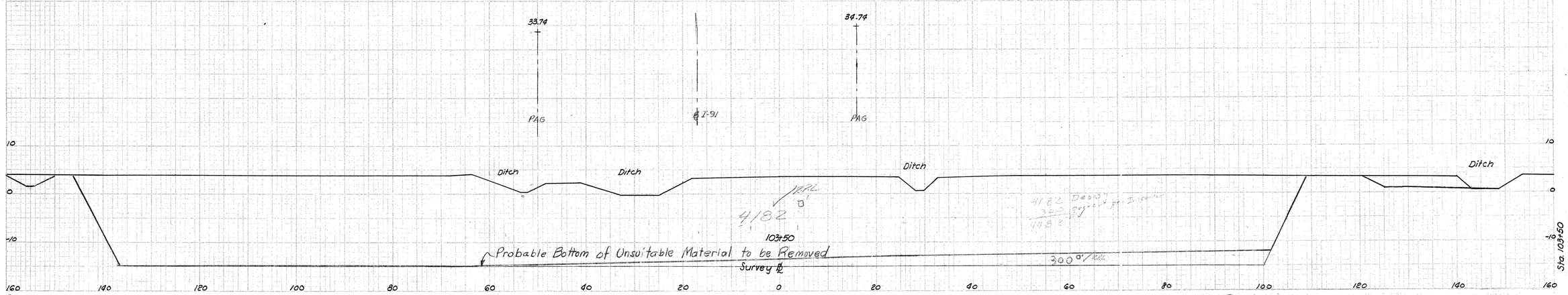

NOTE BOOK NO. 92-111-C
Ground Surface Plotted by REF 1-9-60
" " Checked by GFB 1-9-60
Template Sections Plotted by LJW Co. 9-14-60
" " Checked by LJW Co. 60, 62
Areas by LJW Co. 1960-1962
" Checked by " " "
Final Sections Plotted by
" " Checked by
Final Areas by
" " Checked by
Quantity Transferred by

"ARCHRIGHT" TRACING CLOTH JOSEPH MERRITT & CO. 66669

92 124

M 253 01

(10)

FORM NO. ENG. 18A

PUB. ROAD DIV. NO.	STATE	TOWN	FED. AID PROJ. NO.	PROJ. NO.	YEAR	ROUTE NO.	SHEET NO.	TOTAL SHEETS
1	CONN.	NEW HAVEN	FAP(I-91) 116(2)	92-124	1962	I-91	57	57

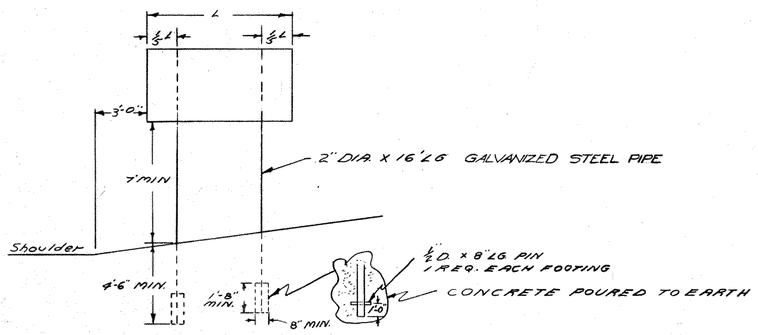

TYPICAL MOUNTING OF SIGNS
SCALE 1/4" = 1'-0"

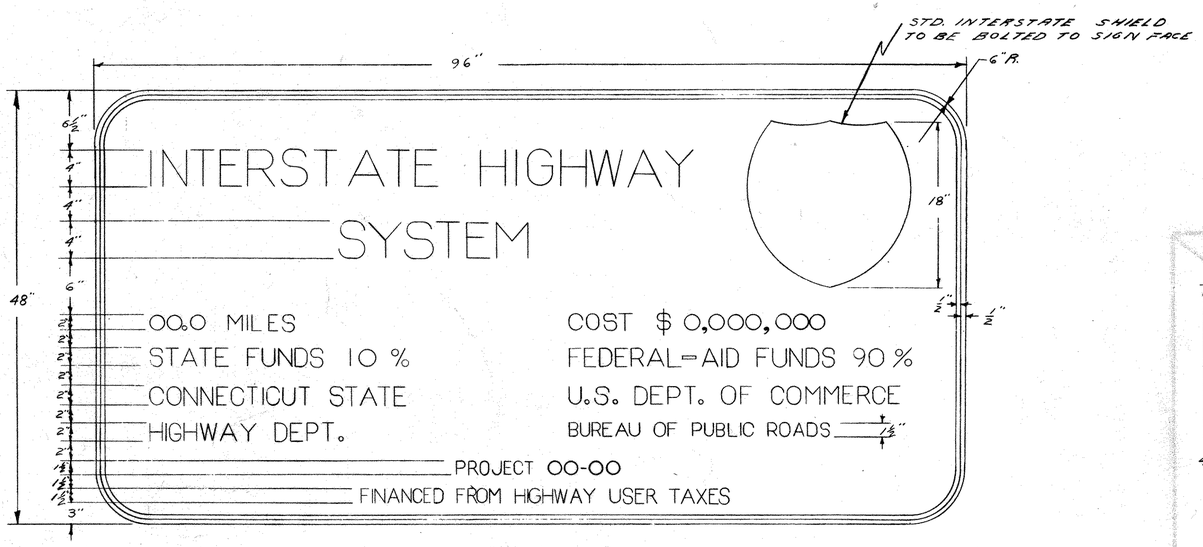

4" SERIES "D" P.R.A. GOTHIC LETTERS, 5/8" STROKE.
2" " "D" " " " , 5/16" " .
1 1/2" " "D" " " " , 1/4" " .
BLACK PAINTED COPY ON PAINTED WHITE BACKGROUND.
1/2" EXTERIOR PLYWOOD GRADE A-C OR BETTER.

TYPICAL INTERSTATE SYSTEM SIGN (SERIES 10A)

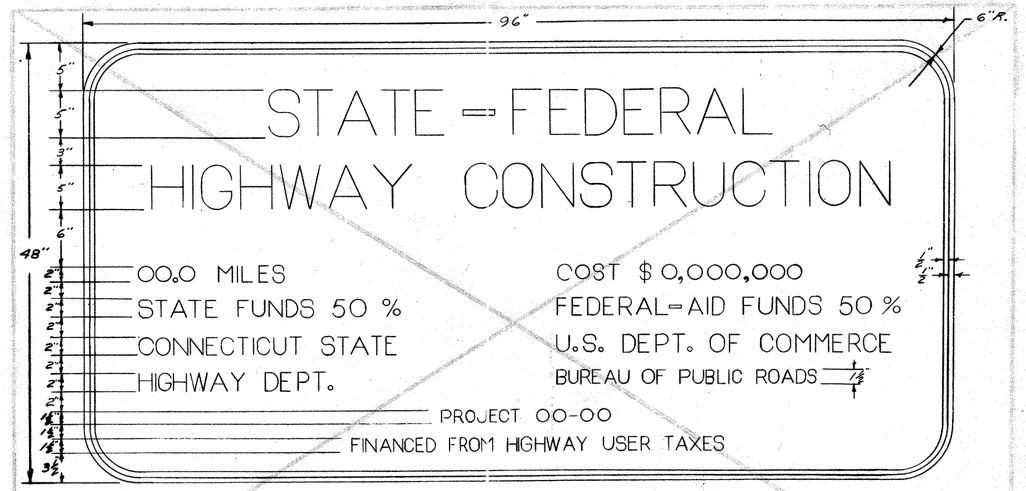

5" SERIES "D" P.R.A. GOTHIC LETTERS, 13/16" STROKE.
2" " "D" " " " , 5/16" " .
1 1/2" " "D" " " " , 1/4" " .
BLACK PAINTED COPY ON PAINTED WHITE BACKGROUND.
1/2" EXTERIOR PLYWOOD GRADE A-C OR BETTER.

TYPICAL PRIMARY SYSTEM SIGN (SERIES 10B)

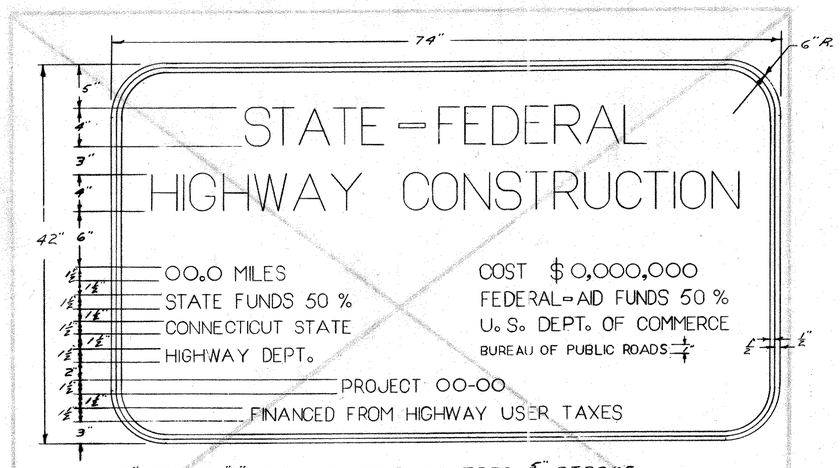

4" SERIES "D" P.R.A. GOTHIC LETTERS, 5/8" STROKE.
1 1/2" " "D" " " " , 3/8" " .
1" " "D" " " " , 3/16" " .
BLACK PAINTED COPY & BORDER ON PAINTED WHITE BACKGROUND.
1/2" EXTERIOR PLYWOOD GRADE A-C OR BETTER.

TYPICAL SECONDARY SYSTEM SIGN (SERIES 10C)

CONNECTICUT
STATE HIGHWAY DEPARTMENT
TRAFFIC DIVISION

FEDERAL AID
CONSTRUCTION-IDENTIFICATION
SIGNS

REVISIONS		
NO.	DATE	DESCRIPTION

SIGNS

SCALES 1 1/2" = 1'-0"
MADE BY A.V.L. DATE 12-6-60
CHECKED BY A.M. DATE 12-6-60
APPROVED [illegible] DATE 12-6-60

PROJECT NO. 92-124

PUB. ROAD DIV. NO.	STATE	TOWN	FED. AID PROJ. NO.	PROJ. NO.	YEAR	ROUTE NO.	SHEET NO.	TOTAL SHEETS
1	CONN.	NEW HAVEN	EACT-91 -1(18)2	92-124	1962	I-91	A	57

WORK TO BE PERFORMED BY THE SOUTHERN NEW ENGLAND TELEPHONE COMPANY.

RELOCATION OF TELEPHONE PLANT
INTERSTATE ROUTE 91
WORK ORDER 85445

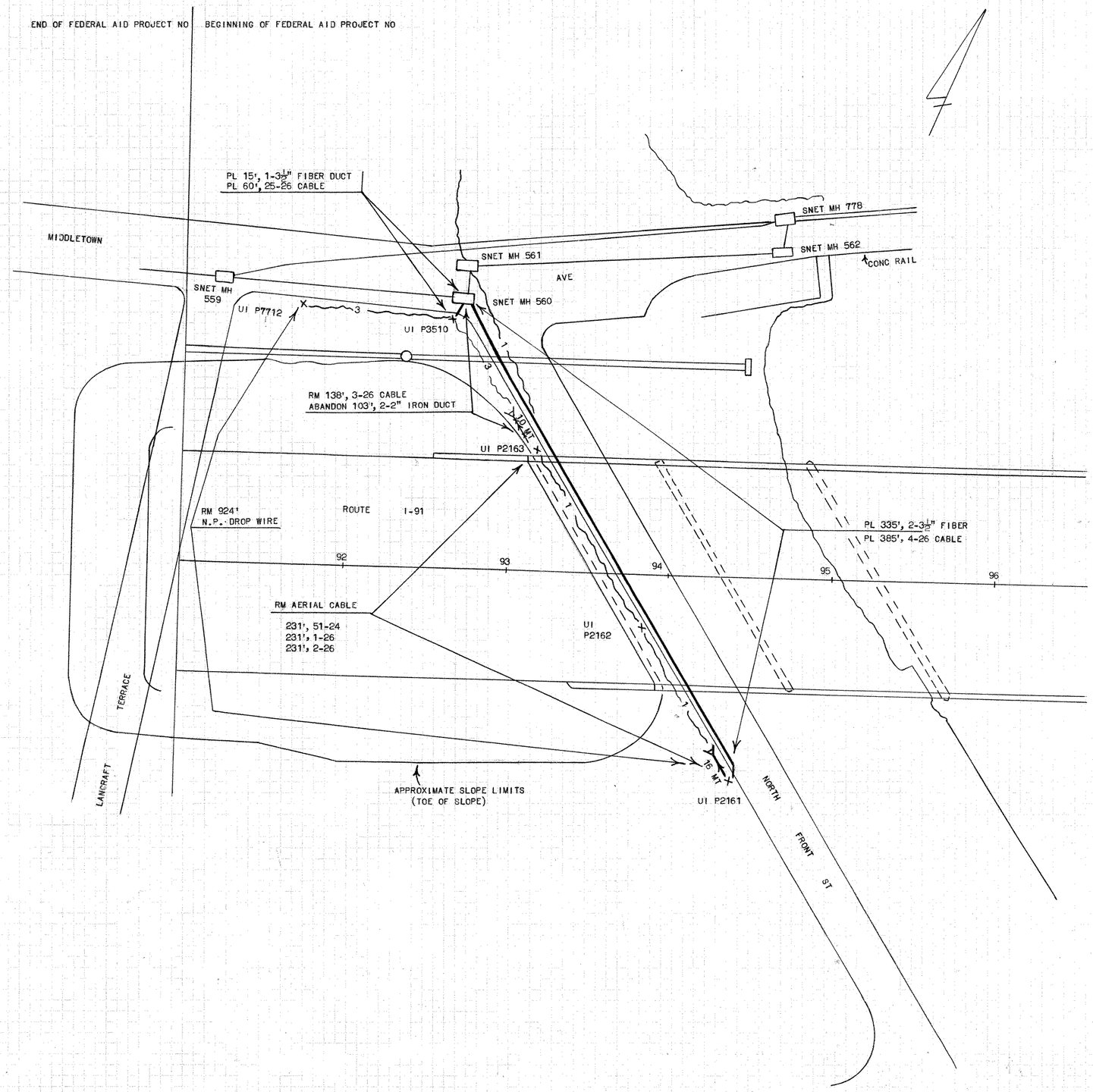

GRAPHIC SCALE
80' 0

SNET SHEET 1

REVISED 11-21-61

—LEGEND—

EXISTING	PROPOSED	
○	●	POLE, SNET CO CUSTODIAN
×	×	POLE, E.L. CO CUSTODIAN
○	●	POLE, REPLACED & RELOCATED
		ANCHOR GUY
		POLE, STUB, TREE OR BLDG GUY
TEL. EL.	TEL. EL.	DOUBLE ANCHOR & SNET CO GUY (EL. CO. TO PLACE OWN STRAND)
		ANCHOR GUY TO BE REMOVED
		CONDUIT & MANHOLE
		DROP WIRE
16 —51-22—	16 —51-22—	CABLE (51 PAIR 22 GAUGE), WITH 16 PAIR TERMINAL

RM = REMOVE, PL = PLACE, REL. = RELOCATE

DESIGNED BY	J. STASIUK		
SCALE	1" = 40'	PROJ. NO.	92-124
MADE BY	A. G. EVGRAFOFF	DATE	9-25-61
CHECKED BY	C. E. TULLY	DATE	9-25-61
APPROVED	R. C. COOK	DATE	9-25-61
TITLE	DISTRICT PLANT ENGINEER		

K+E PHOENIX M186 TRACING CLOTH 66754

92 124

M 258 01

A