FORM NO. ENG. 6 ED. 7-48

PUB. ROAD DIV. NO.	STATE	TOWN	FED. AID PROJ. NO.	PROJ. NO.	YEAR	ROUTE NO.	SHEET NO.	TOTAL SHEETS
1	CONN.	DARIEN	UI-29(11)	35-53	1950	U.S. 1.	1	37

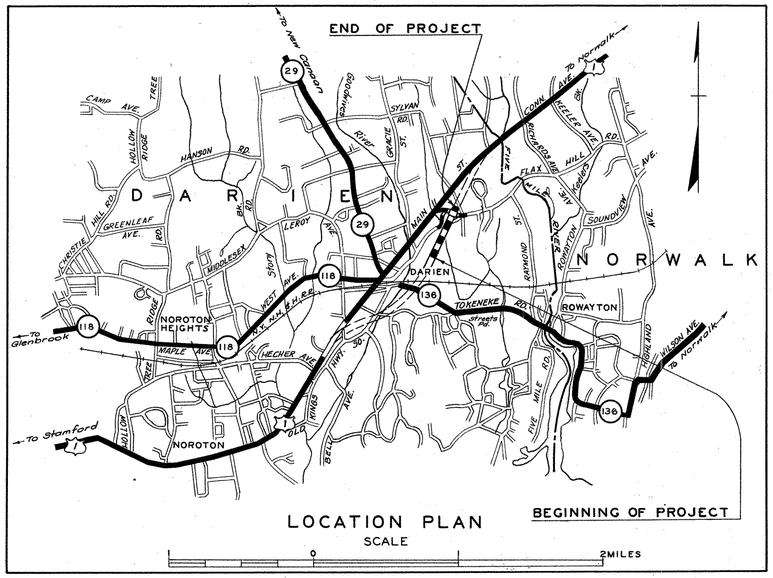

CONNECTICUT
STATE HIGHWAY DEPARTMENT
PLAN
FOR
CONSTRUCTION
OF

RELOCATION OF U.S. ROUTE NO. 1 AND UNDERPASS AND APPROACHES AT OLD KINGS HIGHWAY (NORTH)

IN THE TOWN OF

DARIEN

FROM STA. 153+75 **TO STA.** 174+30

LENGTH 2055 FT.

SCALES
- PLAN 1 IN. = 40 FT.
- PROFILE HOR. 1 IN. = 40 FT. VERT. 1 IN. = 4 FT.
- CROSS SECTIONS 1 IN. = 10 FT. & 5 FT.

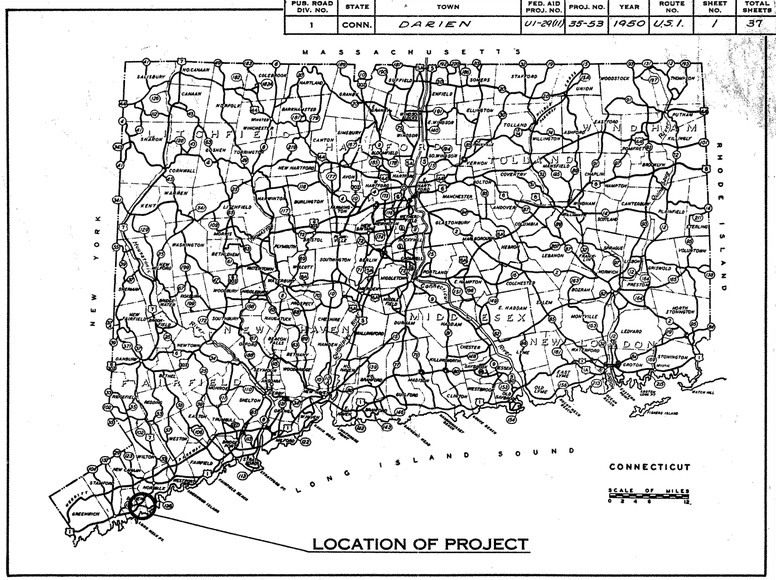

STRUCTURE AND ROUTE U.S. NO. 1 TO BE MAINTAINED BY THE STATE
OLD KINGS HIGHWAY (NORTH) AND VALENTINE VILLAGE LANE TO BE MAINTAINED BY THE TOWN OF DARIEN

1947 SPECIFICATIONS FORM NO. 807 GOVERN

ALL ELEVATIONS ON THIS PROJECT BASED ON U.S.C.&G.S. DATUM (ELEVATIONS INCREASED BY 100 FT.)

TOWN NO. 35
PROJECT NO. 53

FEDERAL AID PROJECT NO. UI-29(11)
STAGE CONSTRUCTION

FEDERAL AID PRIMARY SYSTEM
ESTIMATED A.D.T. IN 1975 — 18000
ASSUMED DESIGN HOURLY CAPACITY
30% OF 4 SHEET HOUR DIVISIONS 2040

Construction Started August 14, 1950
Construction Completed August 17, 1951
Plans Revised By P. O'Connell July 31, 1952
Plans Checked By Zappulla Aug. 4, 1952

THE INFORMATION, INCLUDING ESTIMATED QUANTITIES OF WORK, SHOWN ON THESE SHEETS IS BASED ON LIMITED INVESTIGATIONS BY THE STATE AND IS IN NO WAY WARRANTED TO INDICATE THE TRUE CONDITIONS OR ACTUAL QUANTITIES OR DISTRIBUTION OF QUANTITIES OF WORK WHICH WILL BE REQUIRED.

STANDARD CONVENTIONS

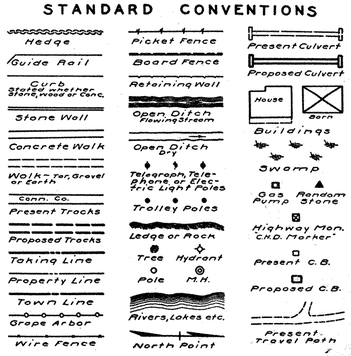

THE INFORMATION, INCLUDING ESTIMATED QUANTITIES OF WORK, SHOWN ON THESE SHEETS IS BASED ON LIMITED INVESTIGATIONS BY THE STATE AND IS IN NO WAY WARRANTED TO INDICATE THE TRUE CONDITIONS OR ACTUAL QUANTITIES OR DISTRIBUTION OF QUANTITIES OF WORK WHICH WILL BE REQUIRED.

LIST OF DRAWINGS

SHEET NO.	TITLE
1	Title Sheet
2	Index Plan Sheet
3	Detailed Estimate Sheet
4 & 5	Typical Cross Section Sheets
6-13	Plan & Profile Sheets
14-17	Bridge at Old Kings Highway (North)
18-37	Cross Sections.
	STANDARD SHEETS
217B	Wire Rope Railing
221E	Underdrain, Outlets & "L" Type Endwalls.
221F	Endwalls, Slope Paved outlets.
222A	Concrete Curbing, Paved Ditch.
223	Standard Manholes
226	A.C.C.M. Pipe Elbow
228A	Type "C" Catch Basin
228B	Type "C-G" Catch Basin
228C	Type "C-L" Catch Basin
228D	Standard Frame & Grate for Type C, "C-G" & "C-L" Catch Basin
711	Standard Figures for Dates on Bridge Railings

RECOMMENDED FOR APPROVAL DATE _____

[redacted]

DISTRICT ENGINEER
BUREAU OF PUBLIC ROADS
DEPARTMENT OF COMMERCE

APPROVED DATE _____

[redacted]

DIVISION ENGINEER
BUREAU OF PUBLIC ROADS
DEPARTMENT OF COMMERCE

APPROVED May 11 1950
Ernest T. Parkins
ENGINEER OF HIGHWAY DESIGN

APPROVED May 11 1950
M. Alfred Kachele
ENGINEER OF LOCATION & DESIGN

APPROVED May 11 1950
Roy E. Ingersen
DEPUTY HIGHWAY COMMISSIONER

FORM NO. ENG. 15 ED. 8-48

FED. ROAD DIV. NO.	STATE	TOWN	FED. AID PROJ. NO.	PROJECT NO.	YEAR	ROUTE NO.	SHEET NO.	TOTAL SHEETS
1	CONN.	DARIEN	U1-29(11)	35-53	1950	U.S. #1	14	37

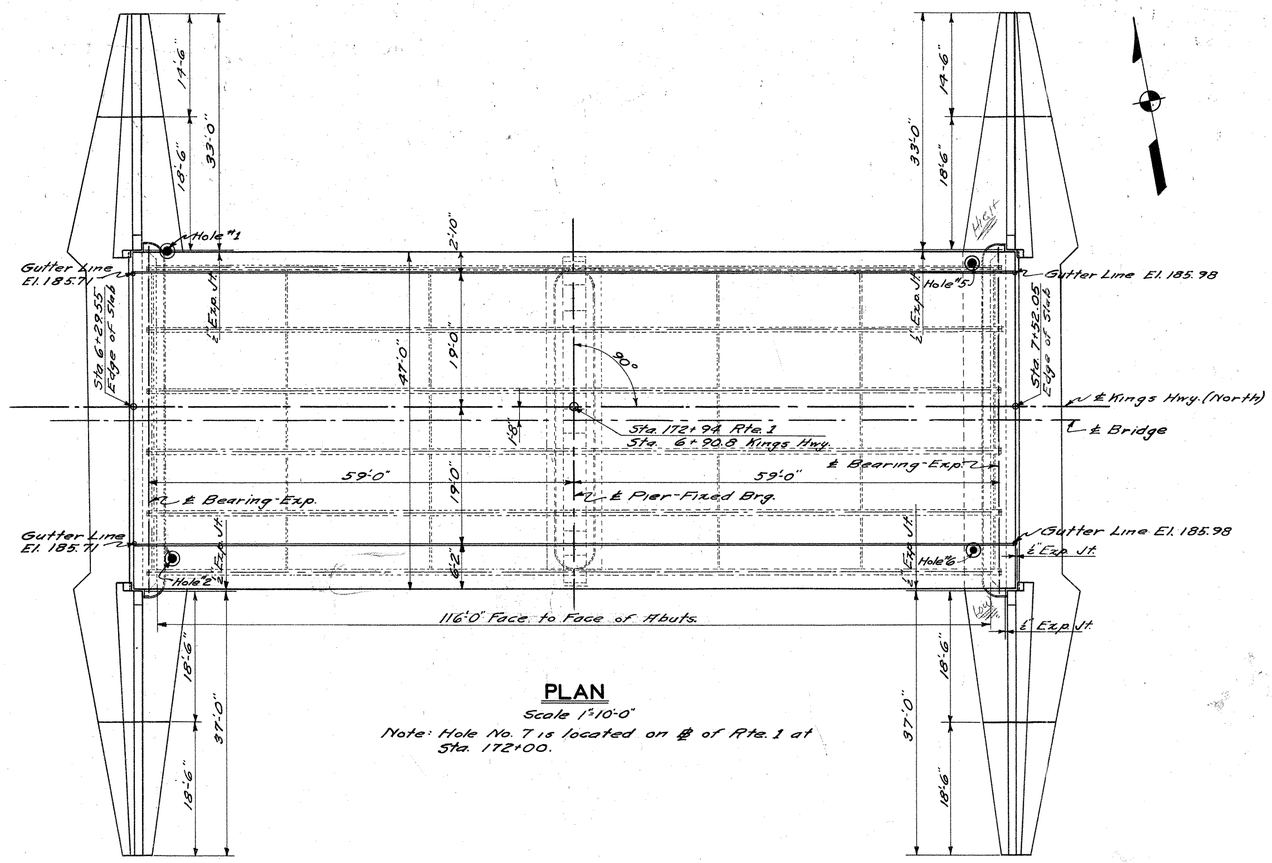

PLAN

Scale 1"=10'-0"

Note: Hole No. 7 is located on ℄ of Rte. 1 at Sta. 172+00.

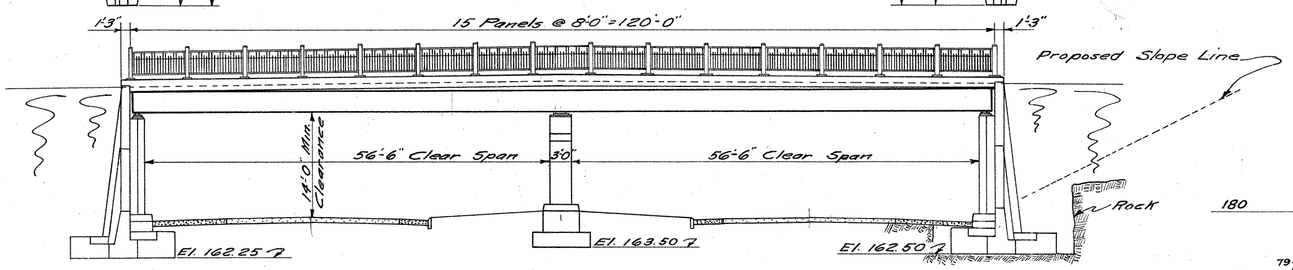

ELEVATION

Scale 1"=10'-0"

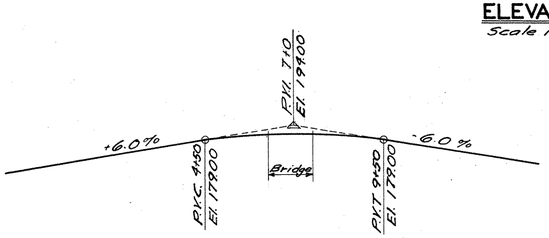

PROFILE - KINGS HWY.

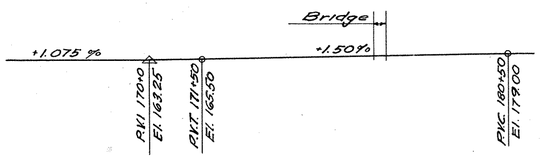

PROFILE - RTE. NO. 1

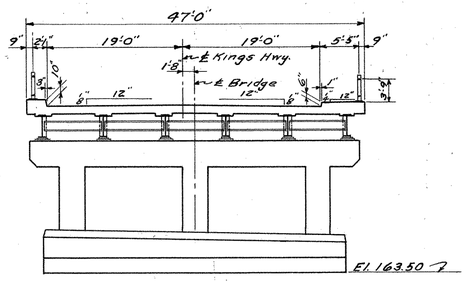

ELEV.-PIER

Scale 1"=1'-0"
Looking East

QUANTITIES

Bridge Excavation	C.Y.	1,026
Class "A" Concrete	C.Y.	937
Portland Cement	Bbl.	1,330
Natural Cement	Bbl.	240
½" Bit. Prem'ld. Jt. Filler for Bridges	S.F.	180
Deformed Steel Bars	Lbs.	30,009
Structural Steel	Lbs.	147,070
Metal Flashing	Lbs.	310
Dampproofing	S.Y.	402
Metal Bridge Rail	L.F.	240
Pervious Material	C.Y.	2,000

Class "A" Concrete Distribution

Superstructure	166 C.Y.
Substructure	370 C.Y.
Footings	401 C.Y.

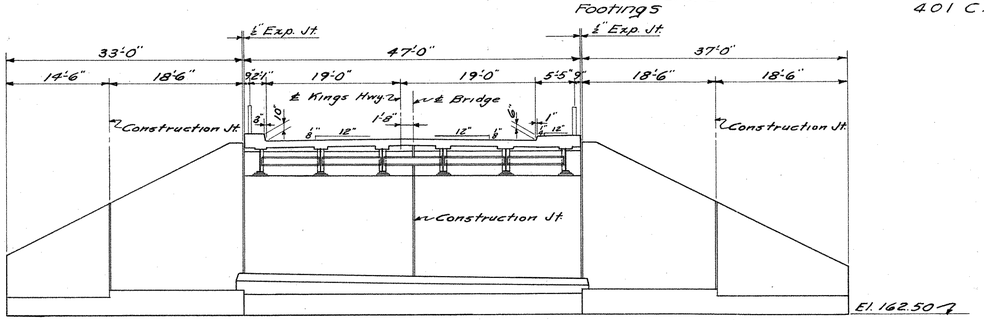

ELEV.-EAST ABUT.

Scale 1"=10'-0"
West Abut. - opposite hand

GENERAL NOTES

General Specifications - Conn. State Highway Dept. Form 807 (1947)
Design Specifications - A.A.S.H.O. '49 Live Load H20-S16-44
Reinforcing steel to consist of deformed bars of an approved type.
Quantities - Cost of furnishing & placing tarpaper and 4" ϕ weepholes with one cubic ft. of broken stone at each drain as shown on plans, is to be included in the general cost of the contract.
Item of structural steel to include all necessary weld material, anchor bolts and steel bearings.
Class "A" concrete to be used thruout.
Quantities are approximate only and do not relieve the Contractor of the responsibility of checking them in preparing his bid.
Bridge excavation shall include only that material removed below the bottom of sub-base, shoulder foundations and cut slope lines, after the roadway excavation is completed.

BORING DATA

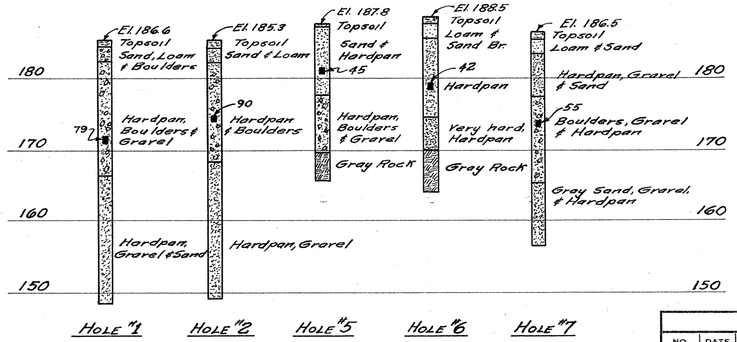

79 - Denotes number of blows to drive a 2½" sampler pipe 1'-0" with a 300# weight falling 2'-0".

FED. AID PROJECT U1-29(11)

CONNECTICUT
STATE HIGHWAY DEPARTMENT
TOWN OF DARIEN

KINGS HIGHWAY-NORTH
OVER
RELOCATION OF U.S. RTE. 1
GENERAL PLAN

REVISIONS		
NO.	DATE	DESCRIPTION

DESIGNED BY G.A.H.
SCALES As noted
MADE BY W.F.D. & G.A.H. DATE 3-15-50
CHECKED BY G.A.H. DATE 3-16-50
APPROVED J. D. Drury DATE 3/23/50
PROJECT NO. 35-53
BRIDGE SHEET NO. 1 OF 4

STANDARD No. 14

Dietzgen Co., Inc., New York, N.Y. No. 131 Tracing Cloth

35 53 160 06

FORM NO. ENG. 15 ED. 8-48

FED. ROAD DIV. NO.	STATE	TOWN	FED. AID PROJ. NO.	PROJECT NO.	YEAR	ROUTE NO.	SHEET NO.	TOTAL SHEETS
1	CONN.	DARIEN	U-249(1)	35-53	1950	U.S.7	15	37

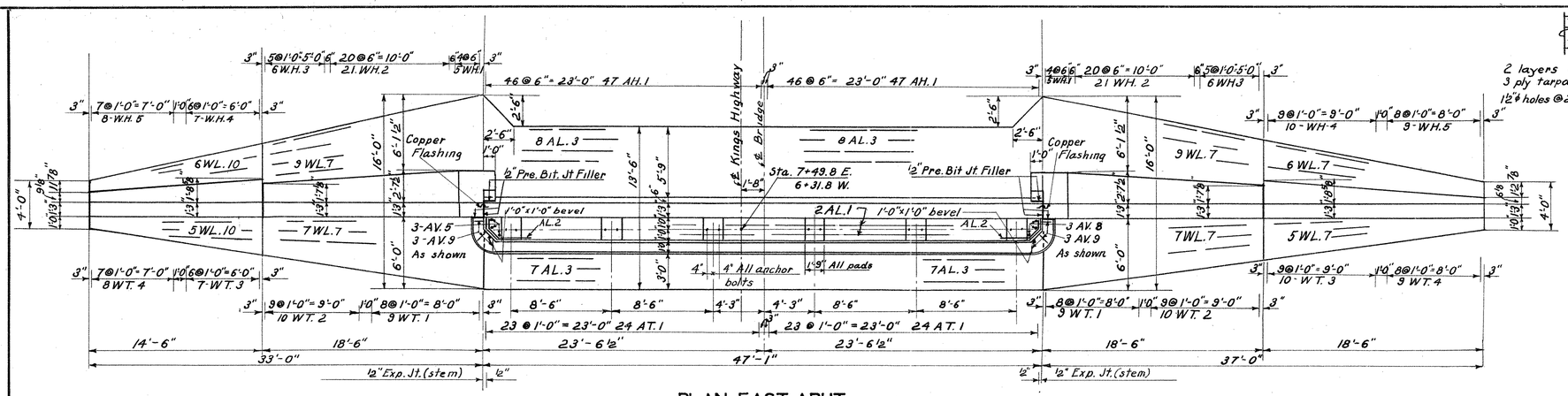

PLAN EAST ABUT.

West Abut. opposite hand
Scale 3/16" = 1'-0"

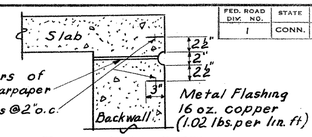

FLASHING DETAIL

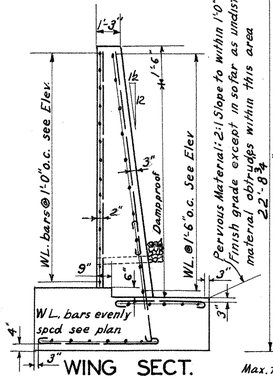

WING SECT.

All dimensions not shown are variable.

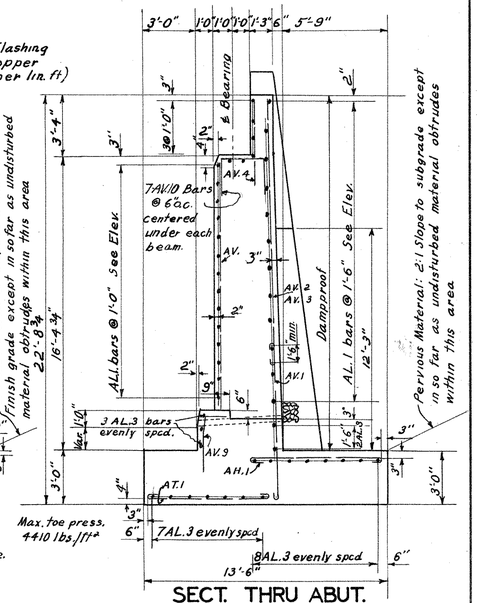

SECT. THRU ABUT.

Scale 1/4" = 1'-0"

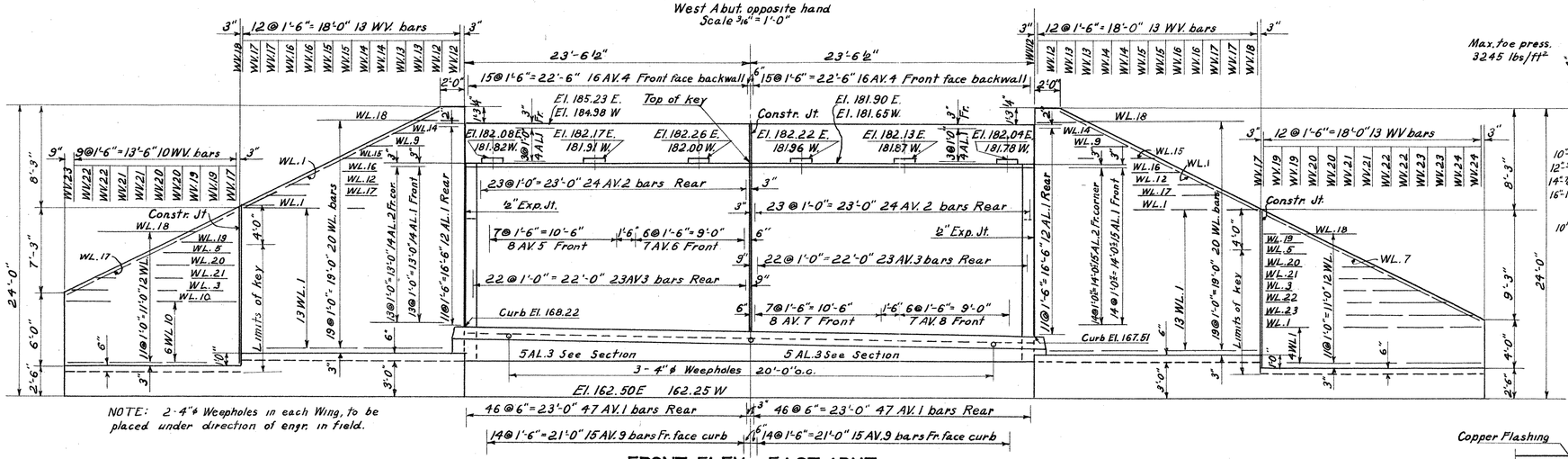

NOTE: 2-4" ϕ Weepholes in each Wing, to be placed under direction of engr. in field.

FRONT ELEV. EAST ABUT.

West Abut. opposite hand
Scale 3/16" = 1'-0"

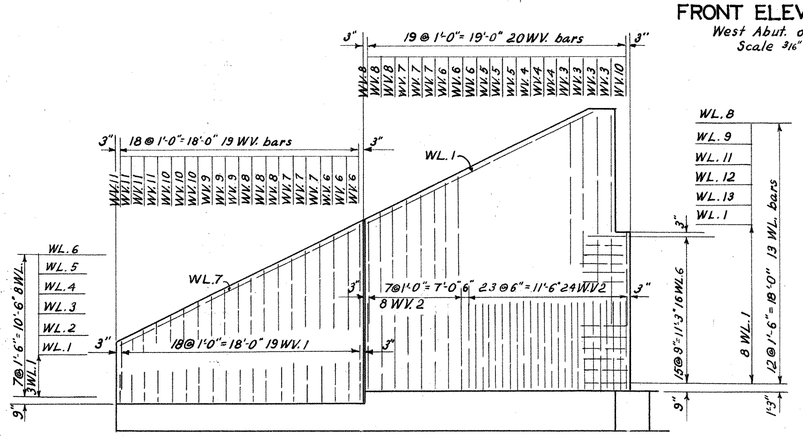

REAR ELEV. S.E. WING

S.W. Wing opposite hand
Scale 3/16" = 1'-0"

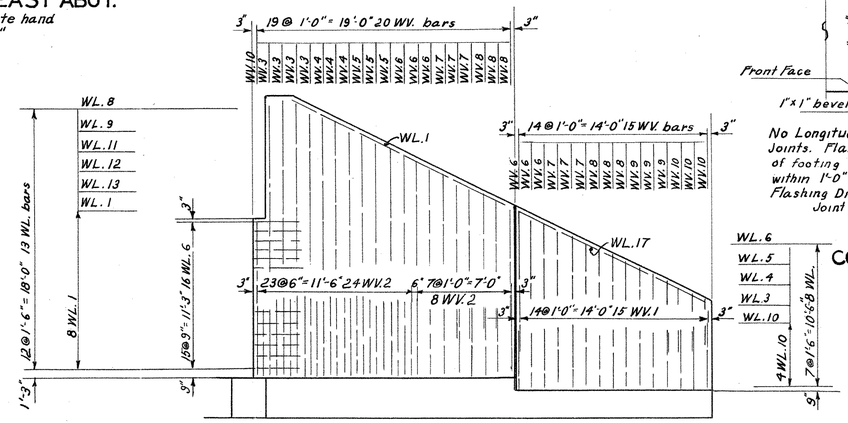

REAR ELEV. N.E. WING

N.W. Wing opposite hand
Scale 3/16" = 1'-0"

Note:
All exposed edges to be beveled 1"x1" except as noted.

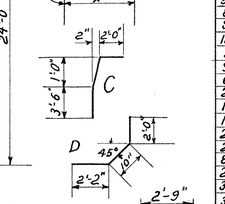

No Longitudinal steel to pass thru Joints. Flashing to extend from top of footing to top of backwall & to within 1'-0" of top of wingwall.
Flashing Dimensions same for expansion Joint except as noted.

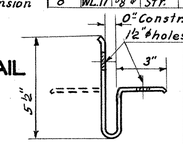

CONST. JOINT DETAIL

FLASHING DET.

BAR BILL TWO ABUTMENTS & FOUR WINGS

No.	Mark	Size	Det	X	Length	Weight	No.	Mark	Size	Det	X	Length	Weight
188	AV.1	7/8" ϕ	A		6'-8"	9'-0"	3458	8	WL.18	5/8" ϕ	Str.		3'-3"	27
150	AL.1	5/8" ϕ	Str.			23'-0"	3598	4	WL.19				5'-3"	22
58	AL.2	5/8" ϕ	D		—	5'-0"	302	4	WL.20				9'-3"	39
80	AL.3	5/8" ϕ	Str.			23'-6"	2188	4	WL.21				11'-3"	47
96	AT.1	7/8" ϕ	A		6'-8"	9'-0"	1766	2	WL.22				15'-3"	32
188	AV.1	3/4" ϕ	A		9'-0"	11'-0"	3106	2	WL.23				17'-3"	36
96	AV.2	5/8" ϕ	B		14'-8"	15'-6"	1552	36	WT.1	7/8" ϕ	A	10'-2"	12'-6"	920
92	AV.3		B		5'-2"	6'-0"	576	40	WT.2	7/8" ϕ	A	8'-8"	11'-0"	899
64	AV.4		Str.			4'-6"	300	34	WT.3	5/8" ϕ	A	5'-10"	7'-6"	266
22	AV.5					13'-3"	304	34	WT.4	5/8" ϕ	A	3'-4"	5'-0"	177
14	AV.6					13'-6"	197	68	WV.1	5/8" ϕ	A	5'-7"	7'-3"	514
16	AV.7					13'-9"	229	128	WV.2	7/8" ϕ	A	9'-2"	11'-6"	3009
20	AV.8					14'-0"	292	16	WV.3	5/8" ϕ	B	15'-2"	16'-0"	267
20	WH.1	1" ϕ	A		7'-4"	10'-0"	534	12	WV.4		B	14'-2"	15'-0"	188
84	WH.2	7/8" ϕ	A		7'-2"	9'-6"	1631	12	WV.5		B	12'-8"	13'-6"	169
24	WH.3	7/8" ϕ	A		5'-8"	8'-0"	392	24	WV.6		B	11'-2"	12'-0"	300
34	WH.4	3/4" ϕ	A		4'-6"	6'-6"	332	24	WV.7		B	9'-8"	10'-6"	263
34	WH.5	3/4" ϕ	A		3'-3"	5'-3"	268	24	WV.8		B	8'-2"	9'-0"	225
118	WL.1	5/8" ϕ	Str.			18'-0"	2215	12	WV.9		B	6'-8"	7'-6"	94
2	WL.2					16'-3"	34	16	WV.10		B	5'-2"	6'-0"	100
8	WL.3					13'-3"	111	8	WV.11		B	3'-8"	4'-6"	38
4	WL.4					10'-3"	43	8	WV.12		Str.		20'-3"	169
8	WL.5					7'-3"	60	8	WV.13				18'-10"	157
68	WL.6					4'-3"	301	8	WV.14				17'-4"	144
90	WL.7					20'-0"	1877	8	WV.15				15'-10"	132
4	WL.8					4'-6"	19	8	WV.16				14'-4"	119
8	WL.9					7'-6"	63	12	WV.17				12'-10"	161
42	WL.10					14'-0"	613	4	WV.18				12'-1"	50
4	WL.11					10'-6"	44	8	WV.19				11'-4"	95
8	WL.12					13'-6"	113	8	WV.20				9'-10"	82
4	WL.13					16'-6"	69	8	WV.21				8'-4"	69
4	WL.14					5'-6"	23	8	WV.22				6'-10"	57
4	WL.15					9'-6"	40	6	WV.23				5'-4"	33
16	WL.16					11'-6"	192	4	WV.24				3'-10"	16
8	WL.17	5/8" ϕ	Str.			15'-6"	129	72	AV.9	5/8" ϕ	C	—	6'-6"	488
								84	AV.10	1"	E		8'-9"	767

Total 37,142

REVISIONS		
NO.	DATE	DESCRIPTION

CONNECTICUT
STATE HIGHWAY DEPARTMENT
TOWN OF DARIEN

KINGS HIGHWAY-NORTH
OVER
RELOCATION OF U.S. RTE. 1
ABUTMENTS AND WINGS

DESIGNED BY GAH
SCALES As noted
MADE BY C.R.J. DATE 3-16-50
CHECKED BY GAH DATE 3-22-50
APPROVED J. D. Drury DATE 3/23/50
PROJECT NO. 35-53
BRIDGE SHEET NO. 2 OF 4

STANDARD No. 15

Cuprex Dietzgen Co., Inc., New York, N.Y. No. 131 Tracing Cloth

35 - 53

160 06

FORM NO. ENG. 15 ED. 8-48

FED. ROAD DIV. NO.	STATE	TOWN	FED. AID PROJ. NO.	PROJECT NO.	YEAR	ROUTE NO.	SHEET NO.	TOTAL SHEETS
1	CONN.	DARIEN	U1-298(1)	35-53	1950	US#1	16	37

REINFORCING STEEL

Mark	No.	Size	Remark	Length	Weight
P1	15	1"⌀	Det.	43'-6"	1742
P2	42	¾"⌀	"	9'-0"	568
P3	86	⅝"⌀	"	8'-3"	740
P4	42	"	Str.	7'-6"	329
P5	6	"	"	41'-6"	260
P6	4	"	"	37'-6"	156
P7	9	1"⌀	"	37'-6"	901
P8	72	⅝"⌀	"	7'-6"	1104
P9	105	½"⌀	Det.	11'-8"	818
P10	72	⅝"⌀	Str.	12'-0"	1766
P11	12	1"□	Det.	25'-0"	1020
P12	6	⅝"⌀	Det.	11'-3"	70
P13	12	1"□	Det.	17'-6"	714
P14	6	1"□	Str.	21'-0"	428
P15	12	1"□	Det.	12'-3"	500
P16	8	⅝"⌀	Str.	24'-0"	200
			Total Weight		11,316#

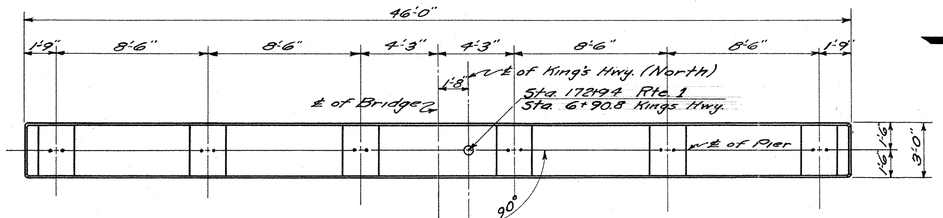

PLAN
Scale ¼"=1'-0"

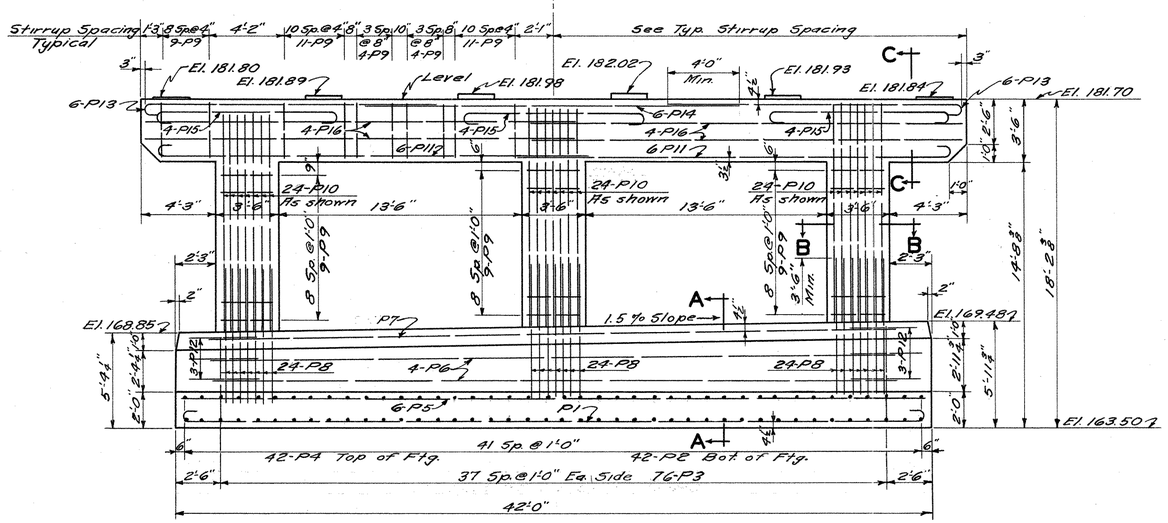

ELEVATION
Scale ¼"=1'-0"

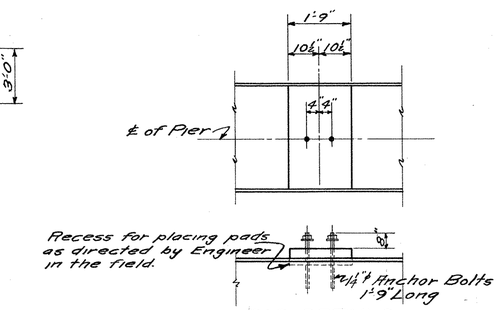

PAD DETAILS
Scale ½"=1'-0"

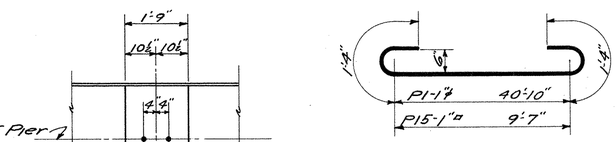

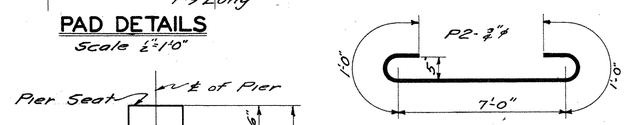

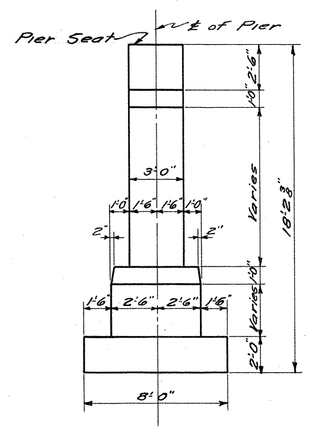

END ELEV.
Scale ¼"=1'-0"

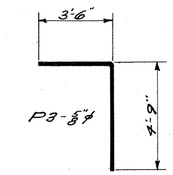

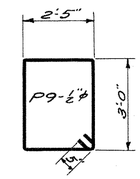

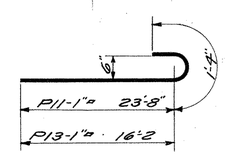

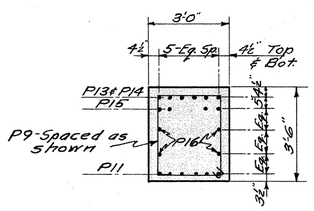

SECT. C-C
Scale ⅜"=1'-0"
THRU BEAM

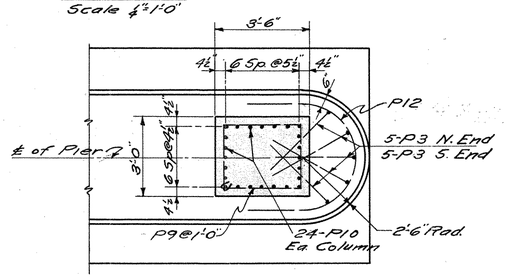

SECT. B-B
Scale ⅜"=1'-0"
THRU COLUMNS
North end of footing shown, south end similar.

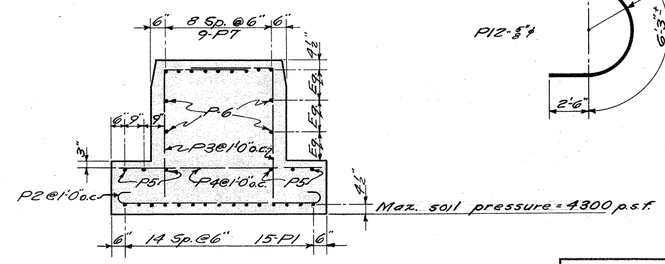

SECT. A-A
Scale ⅜"=1'-0"
THRU FOOTING

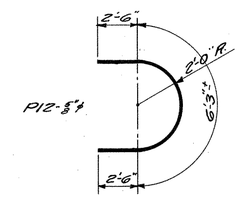

NOTE:
Bevel all exposed edges 1"x1".

REVISIONS		
NO.	DATE	DESCRIPTION

CONNECTICUT
STATE HIGHWAY DEPARTMENT
TOWN OF DARIEN
KINGS HIGHWAY-NORTH
OVER
RELOCATION OF U. S. RTE. 1
PIER

DESIGNED BY GAH
SCALES As noted
MADE BY W.F.D. DATE 3-10-50
CHECKED BY GAH DATE 3-14-50
APPROVED J. D. Dewey DATE 3/23/50
PROJECT NO. 35-53
BRIDGE SHEET NO. 3 OF 4
STANDARD NO. 16

Eugene Dietzgen Co., Inc., New York, N. Y. No. 151 Tracing Cloth

35 53

160 06

FORM NO. ENG. 15 ED. 8-48

FED. ROAD DIV. NO.	STATE	TOWN	FED. AID PROJ. NO.	PROJECT NO.	YEAR	ROUTE NO.	SHEET NO.	TOTAL SHEETS
1	CONN.	DARIEN	U1-249(6)	35-53	1950	U.S. #1	17	37

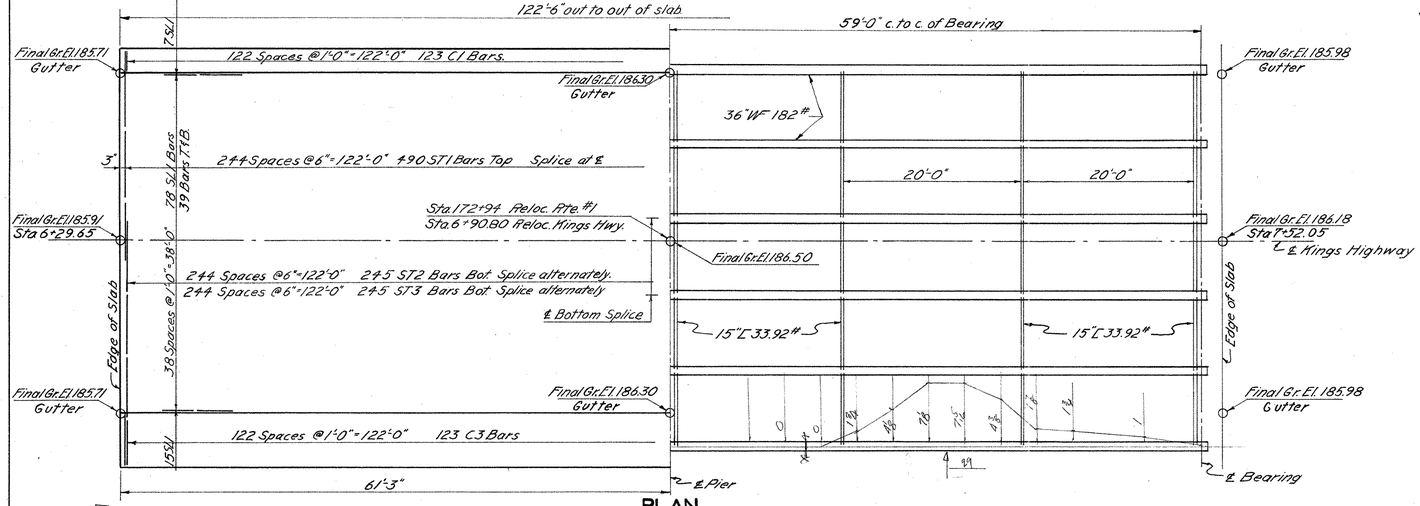

PLAN

Scale 1/8" = 1'-0"

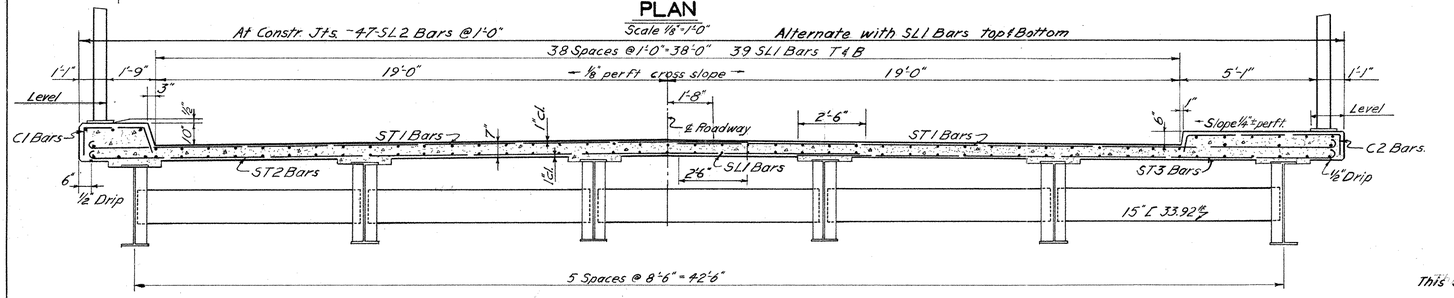

TYPICAL SECTION

Scale 3/16" = 1'-0"

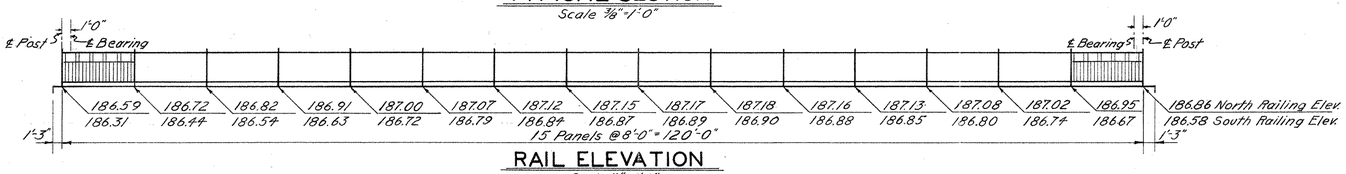

RAIL ELEVATION

Scale 1/8" = 1'-0"

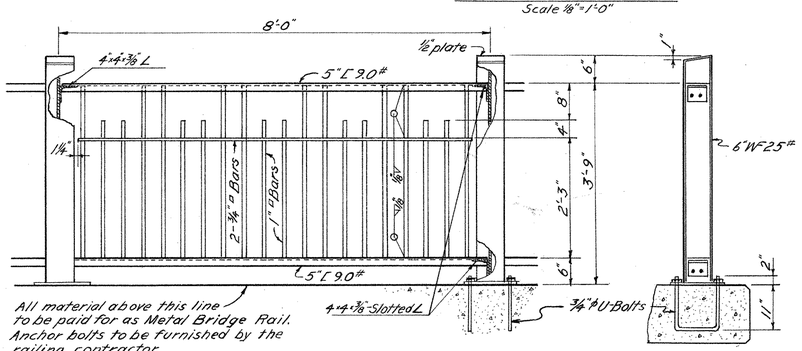

All material above this line to be paid for as Metal Bridge Rail. Anchor bolts to be furnished by the railing contractor.

RAIL DETAILS

Scale 3/4" = 1'-0"

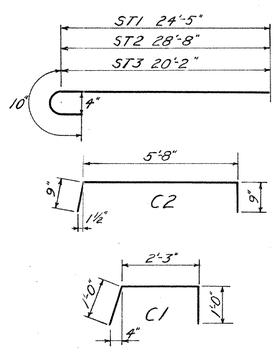

BAR DETAILS

Shop Paint
Zinc chromate & Iron oxide. No paint for contact surfaces, field welding surfaces or surfaces in contact with concrete.
Field Paint
2 coats of a color & shade as directed by the Engineer in the field.

Curved Sole Plates & Masonry Plates to be "Mayari-R" steel, "Cor-Ten" steel or equivalent. Payment for the above special plates to be included in price bid for structural steel.

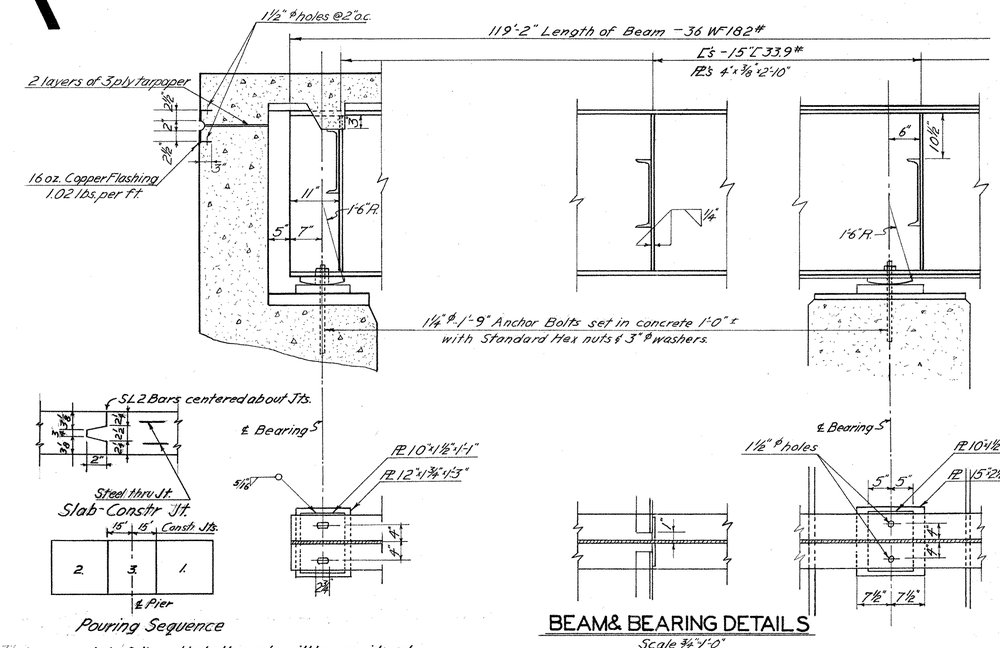

BEAM & BEARING DETAILS

Scale 3/4" = 1'-0"

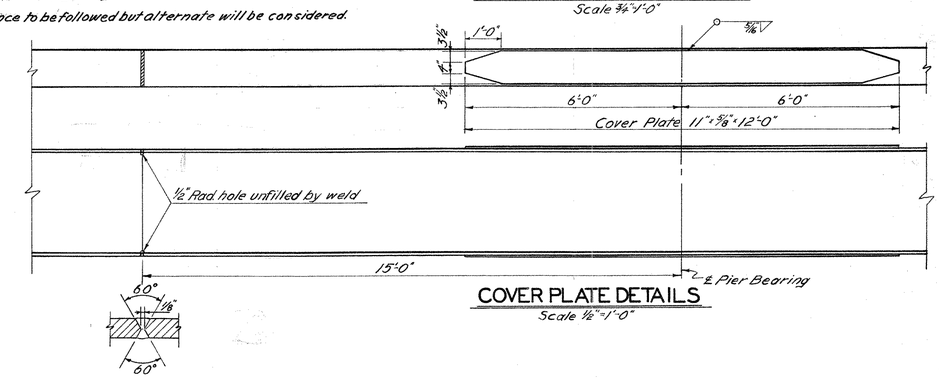

Note: After welding, both sides are to be ground smooth.

COVER PLATE DETAILS

Scale 1/2" = 1'-0"

DETAIL-FIELD SPLICE

Bevel all exposed edges 1" x 1".

00047

BAR BILL					
Mark	No.	Size	Length	Detail	Weight
C1	123	5/8" ø	4'-3"	Detail	545
C2	123	"	7'-2"	"	919
SL1	300	"	42'-6"	Str.	13,298
ST1	490	"	25'-3"	Detail	12,905
ST2	245	"	29'-6"	"	7538
ST3	245	"	21'-0"	"	5366
SL2	188	"	5'-0"	Str.	980
				TOTAL	41,551

REVISIONS		
NO.	DATE	DESCRIPTION

CONNECTICUT
STATE HIGHWAY DEPARTMENT
TOWN OF DARIEN

KINGS HIGHWAY-NORTH
OVER
RELOCATION OF U. S. RTE. 1
SUPERSTRUCTURE

DESIGNED BY G.A.H.
SCALES As noted
MADE BY I.R.N. DATE 3-16-50
CHECKED BY G.A.H. DATE 3-20-50
APPROVED J. D. Drury DATE 3/23/50
PROJECT NO. 35-53
BRIDGE SHEET NO. 4 OF 4

STANDARD No. 17

Eugene Dietzgen Co., Inc., New York, N. Y. No. 111 Tracing Cloth

35 58

160 08

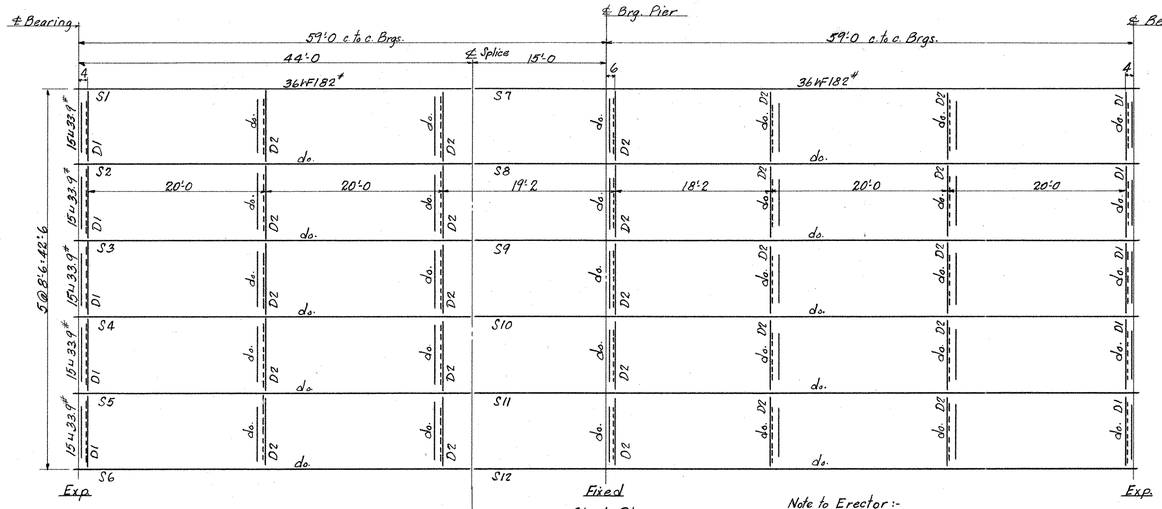

Steel Plan

Note to Erector:-
Erect stringers with Mark in the same position as shown on the plan.

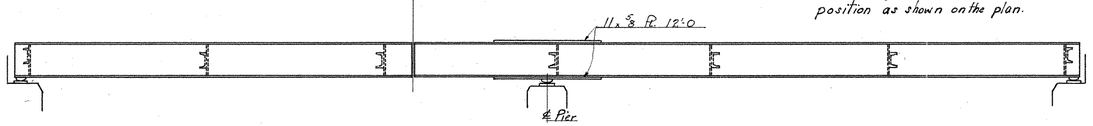

Elevation

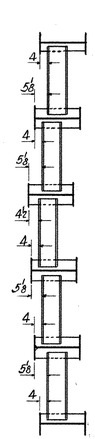

End View

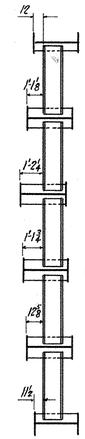

Typical Cross Section

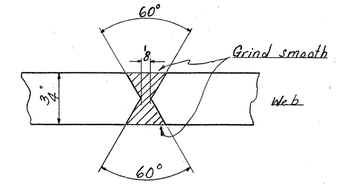

Enlarged view of Butt Weld at Web Splice

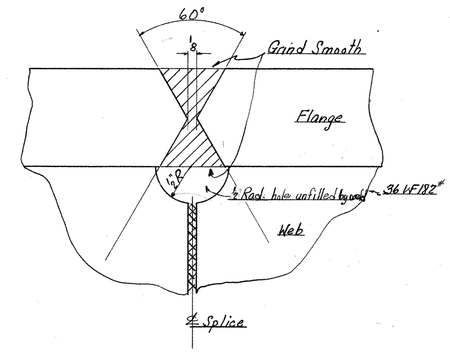

Enlarged view of butt weld of flange and open hole cut in web of beam Top and Bottom

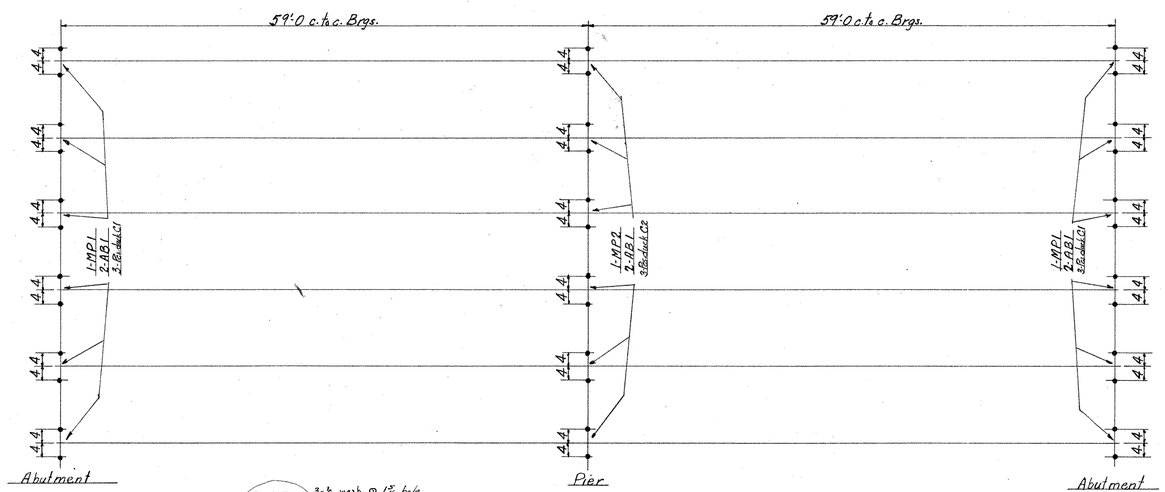

Anchor Bolt Plan

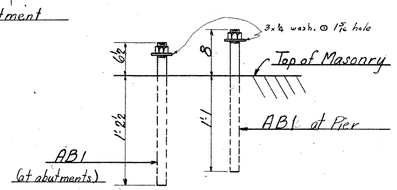

Projection of Anchor Bolts above Masonry

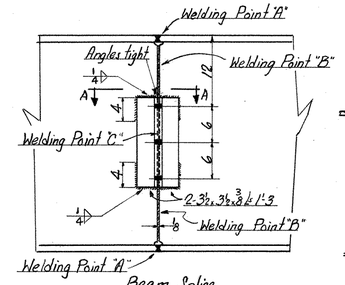

Beam Splice

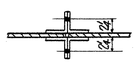

Section A-A

Erectors Note:-
Bolt 36 WF beams together with splice angles then weld Top & Both flanges (Point "A") and portion of web not covered by splice angles (Point "B"). Remove splice angles and finish web welding (Point "C"). Grind welds smooth

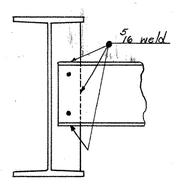

View showing field weld for all diaphragms

List of Drawings

No.	Description
P1	Plan (this Dwg.)
1	String. + Diaphragms
2	Stringers
3	Stringer & Bearings

CONNECTICUT
STATE HIGHWAY DEPT.
TOWN OF DARIEN
KINGS, HIGHWAY - NORTH
OVER
RELOCATION OF U. S. RTE. 1
THE BRUNALLI CONST. CO. CONTRACTOR

PHOENIX BRIDGE COMPANY
CONTRACT 872
C. O.
DRAWING: P1
ENGINEER: J.J. Ford
DRAFTSMAN J.M. Williams
CHECKED BY J.F. 7-6-50
SCALE 1/8" and 1" = 1 foot & Full size
DATE June 30, 1950

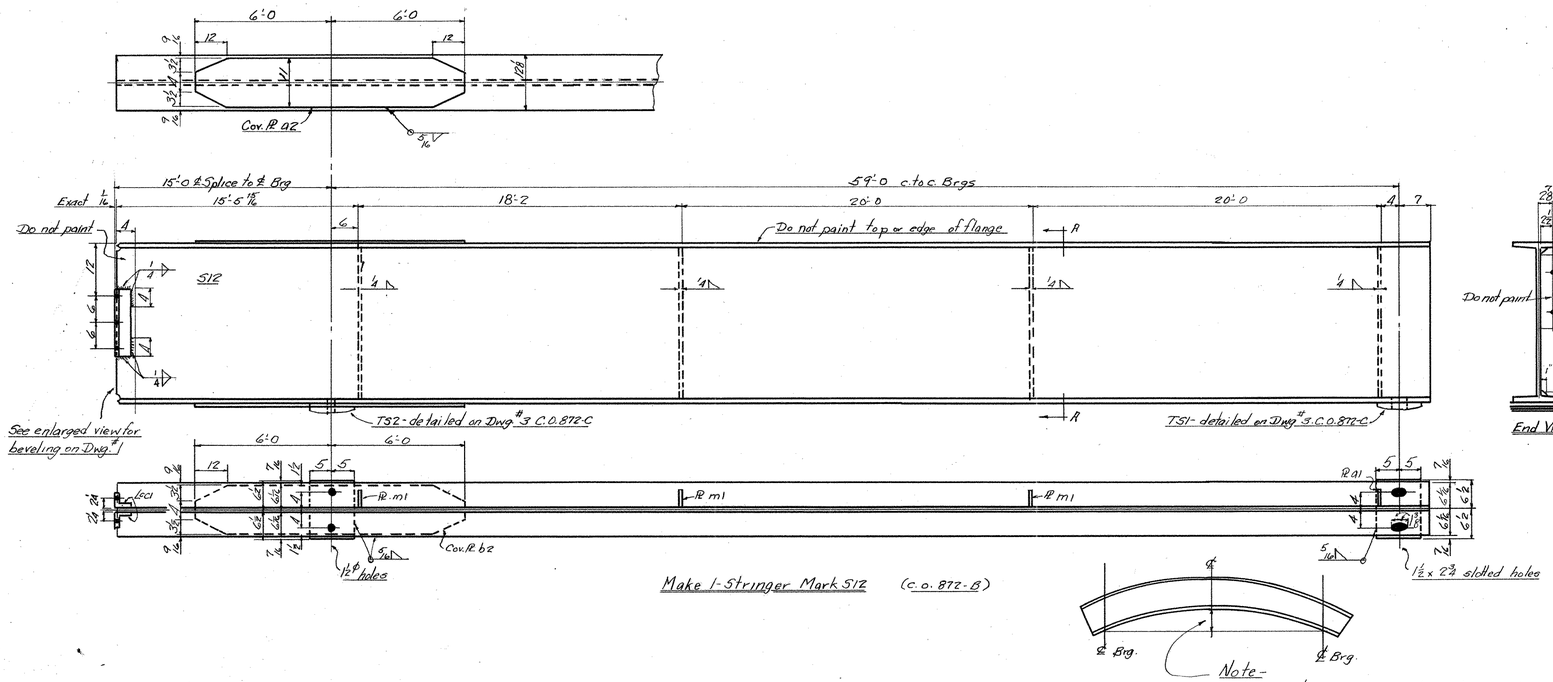

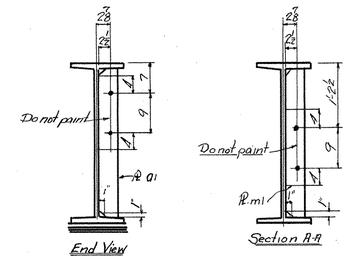

Make 1-Stringer Mark S12 (C.O. 872-B)

Note-
The 36" Stringers are not to be cambered but if they are not rolled exactly true they are to be fabricated with concave side down.

Material for S12

1		36 WF 182#	74'-6 15/16	a.d. 74'-8
1	a2	11 x 5/8 U.M. Cov. PL	12'-0	T. web
1	b2	do	12'-0	" "
1	a1	4 x 5/8 PL	2'-10 3/16	T. M2E.
3	m1	do	2'-10 3/16	" " "
2	c1	3½ x 3½ x 3/8 Ls	1'-3	"
1	TS1 - detailed on Dwg. #3 C.O. 872-C			
1	TS2 " " " 3-C.O. 872-C			

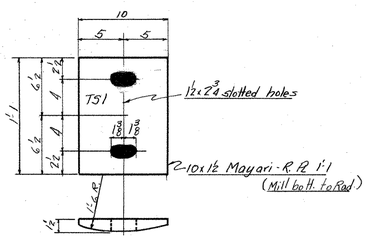

Make 12-Top Shoes Mk. TS1 (C.O. 872-C)
(Welded in shop to stringers S1 to S6 incl. on Dwg. #1 S7 to S11 incl. on Dwg. #2 and S12 on Dwg. #3)

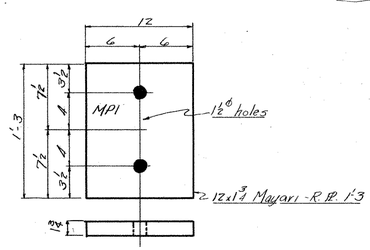

Make 12-Masonry Pls. Mk. MP1 (C.O. 872-C)

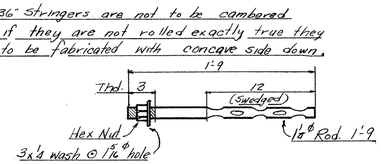

Make 36-Anchor Bolts Mk. AB1
(C.O. 872-C)

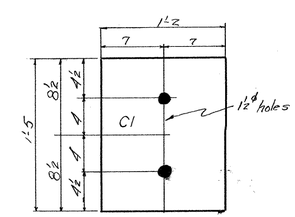

36-Pcs. 12 or 14 oz. Canvas Duck 14 x 17 Mk. C1
(C.O. 872-C)

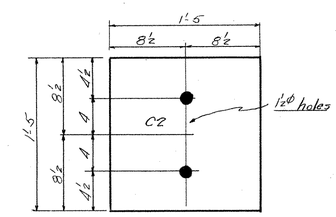

18-Pcs. 12 or 14 oz. Canvas Duck 17 x 17 Mk. C2
(C.O. 872-C)

3-Gals. of Red Lead Paint
(C.O. 872-C)

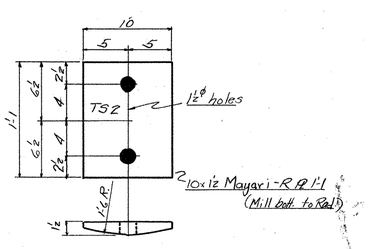

Make 6-Top Shoes Mk. TS2 (C.O. 872-C)
(Welded in shop to stringers S7 to S11 incl. on Dwg. #2 and S12 on Dwg. #3)

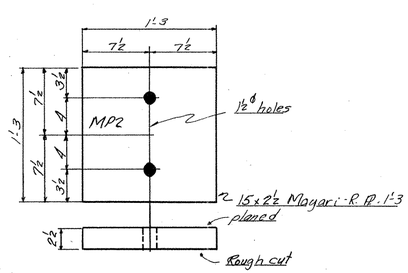

Make 6-Masonry Pls. Mk. MP2 (C.O. 872-C)

Note to Shop:
Place shipping marks at left end of stringers as shown.

CONNECTICUT
STATE HIGHWAY DEPT.
TOWN OF DARIEN
KINGS HIGHWAY - NORTH
OVER
RELOCATION OF U.S. RTE. 1
THE BRUNALLI CONST. CO. CONTRACTOR

Stringers & Bearings

SPECIFICATIONS:- STATE OF CONNECTICUT STATE HWY DEPT. MARCH 1947 FORM 807
STRUCTURAL STEEL:- A.S.T.M. A7-46 13/16ϕ OPEN HOLES unless noted
WELDING:- AMERICAN WELDING SOCIETY SPECIFICATIONS
SHOP PAINT:- ONE COAT OF ZINC CHROMATE AND IRON OXIDE AS PER CONNECTICUT STATE SPECIAL PROVISIONS
CONTACT SURFACES NOT PAINTED. (edge distance not given ℄)
MACHINED SURFACES COATED WITH WHITE LEAD AND TALLOW
LAST ASSEMBLY MARK SHOP LIST PAGES

PHOENIX BRIDGE COMPANY
CONTRACT 872
C.O. 872-B+C
DRAWING: 3
ENGINEER: J.J. Ford
DRAFTSMAN J.M. Williams
CHECKED BY C.J. 7/27/50
SCALE ¾", 1½", 1'-0
DATE July 13, 1950

35 53

160 06

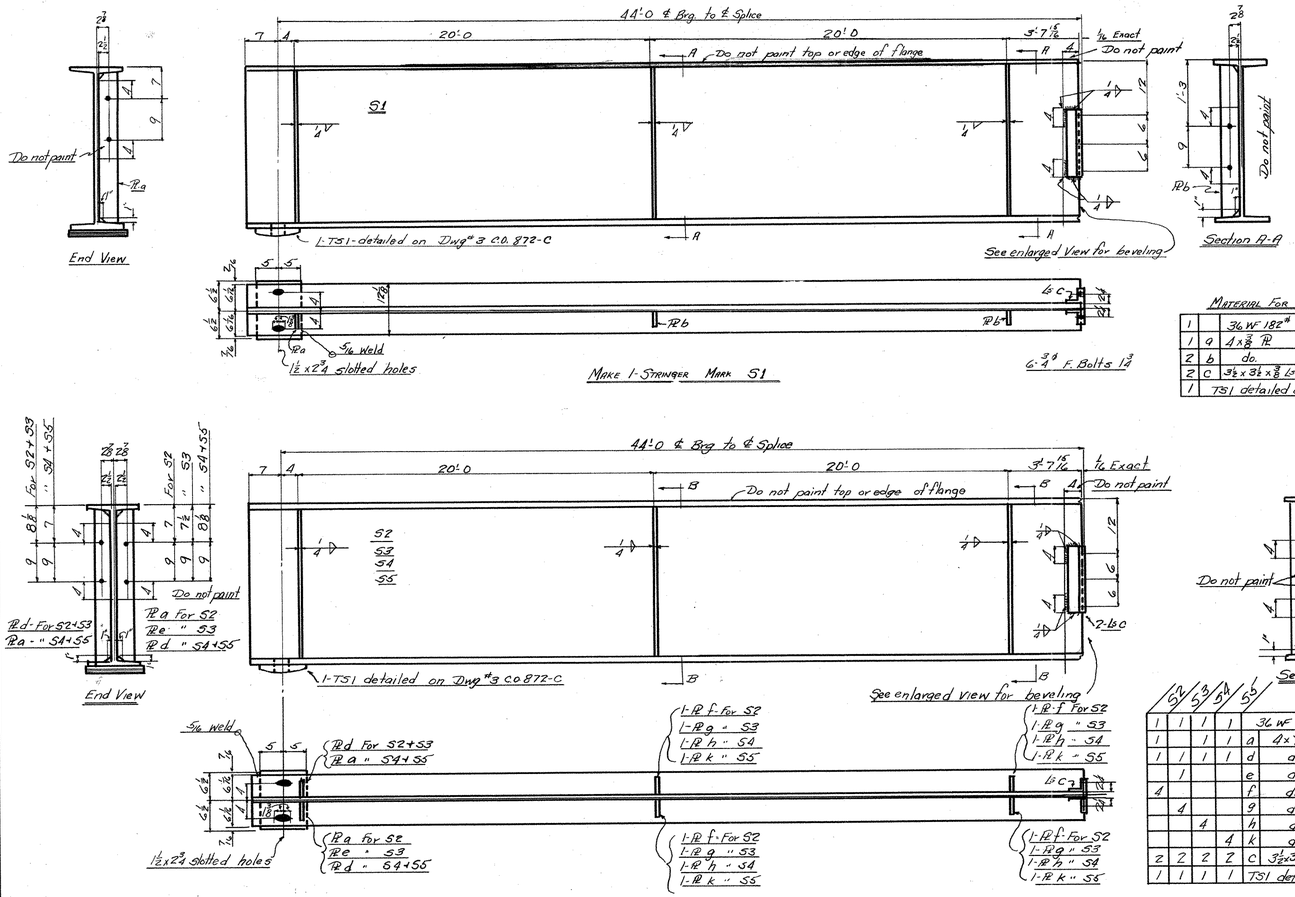

Make 1-Stringer Mark S1

Material for S1				
1		36 WF 182#	44'-6 15/16	ord 44'-8
1	a	4 x 3/8 PL	2'-10 7/16	T. M2E } ord.-20'-6
2	b	do.	2'-10 7/16	T. M2E
2	c	3 1/2 x 3 1/2 x 3/8 ∠s	1'-3	Weld
1		TS1 detailed on Dwg #3 C.O. 872-C		

Make 1 Stringer Mark S2
" 1 " " S3
" 1 " " S4
" 1 " " S5

Material for S2								
1	1	1	1		36 WF 182#	44'-6 15/16	ord 44'-8	
1				a	4 x 3/8 PL	2'-10 7/16	T. M2E	
1	1	1	1	d	do.	2'-10 7/16	T. M2E	
	1			e	do.	2'-10 7/16	T. "	
4				f	do.	2'-10 7/16	T. "	
	4			g	do.	2'-10 7/16	T. "	
		4		h	do.	2'-10 7/16	T. "	
			4	k	do.	2'-10 7/16	T. "	
2	2	2	2	c	3 1/2 x 3 1/2 x 3/8 ∠s	1'-3	weld	
1	1	1	1		TS1 detailed on Dwg #3 C.O. 872-C			

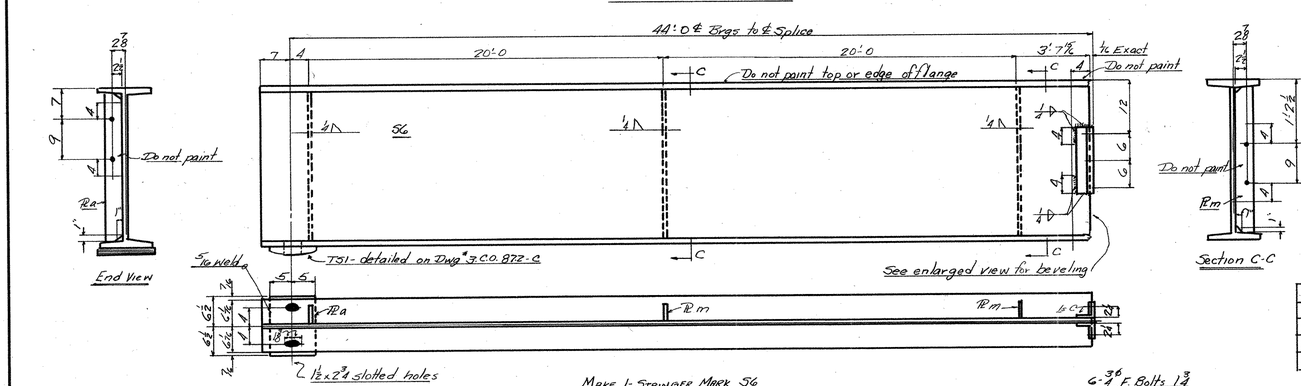

Make 1-Stringer Mark S6

Material for S6				
1		36 WF 182#	44'-6 15/16	ord 44'-8
1	a	4 x 3/8 PL	2'-10 7/16	T. M2E.
2	m	do	2'-10 7/16	T. M2E
2	c	3 1/2 x 3 1/2 x 3/8 ∠s	1'-3	
1		TS1-detailed on Dwg #3 C.O. 872-C		

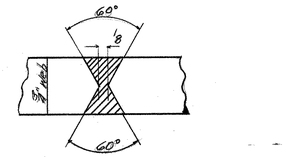

Enlarged view showing beveling of web of 36 WF Beam for field welding.

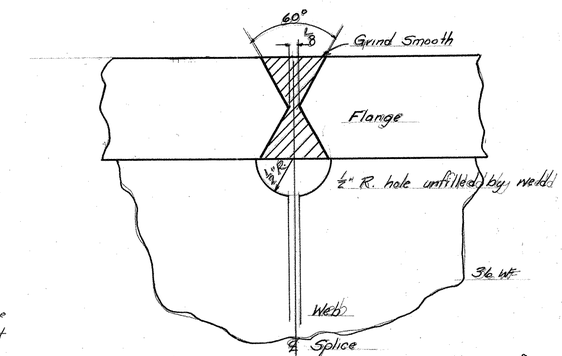

Enlarged view showing beveling of top + bottom flanges of 36 WF Beams for field welding. Also cutting Rad. of web.

Shop Notes

Ends of stringers field splices must be cut square to axis of beam so that 1/8" root opening of joints will be maintained for web and both flanges. Dimensions from ℄ splice to ℄ Bearing must be exact.

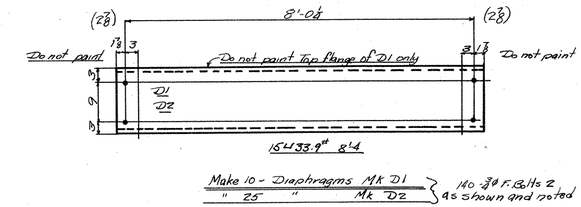

15 @ 33.9# 8'-4

Make 10 - Diaphragms Mk D1 } 140-3/4 ϕ F. Bolts 2
" 25 " Mk D2 } as shown and noted

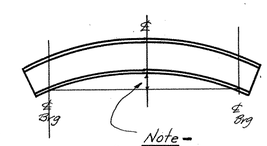

Note - The 36" Stringers are not to be cambered but if they are not rolled exactly true they are to be fabricated with concave side down

Summary of Field Bolts

36 - 3/4 ϕ F. Bolts 1 3/4
140 - 3/4 ϕ " " 2

Note to Shop

Place shipping marks at left end of stringers + Diaphragms as shown

CONNECTICUT
STATE HIGHWAY DEPT.
TOWN OF DARIEN
KINGS, HIGHWAY - NORTH
OVER
RELOCATION OF U.S. RTE. 1
THE BRUNALLI CONST. CO. CONTRACTOR

STRINGERS and DIAPHRAGMS

SPECIFICATIONS:- STATE OF CONNECTICUT STATE HWY. DEPT. MARCH 1947 FORM 807
STRUCTURAL STEEL:- A.S.T.M. A7-46 13/16 OPEN HOLES unless noted
WELDING:- AMERICAN WELDING SOCIETY SPECIFICATIONS
SHOP PAINT:- ONE COAT OF ZINC CHROMATE AND IRON OXIDE AS PER CONNECTICUT STATE SPECIAL PROVISIONS
CONTACT SURFACES NOT PAINTED. (Edge distances Not given 1 1/2)
MACHINED SURFACES COATED WITH WHITE LEAD AND TALLOW
LAST ASSEMBLY MARK m SHOP LIST PAGES 1

PHOENIX BRIDGE COMPANY
CONTRACT 872
C.O. 872-B
DRAWING: 1
ENGINEER: J.J. Ford
DRAFTSMAN J.M. Williams
CHECKED BY C.A. 7/26/50
SCALE 3/8 = 1'-0 Full size
DATE July 11, 1950

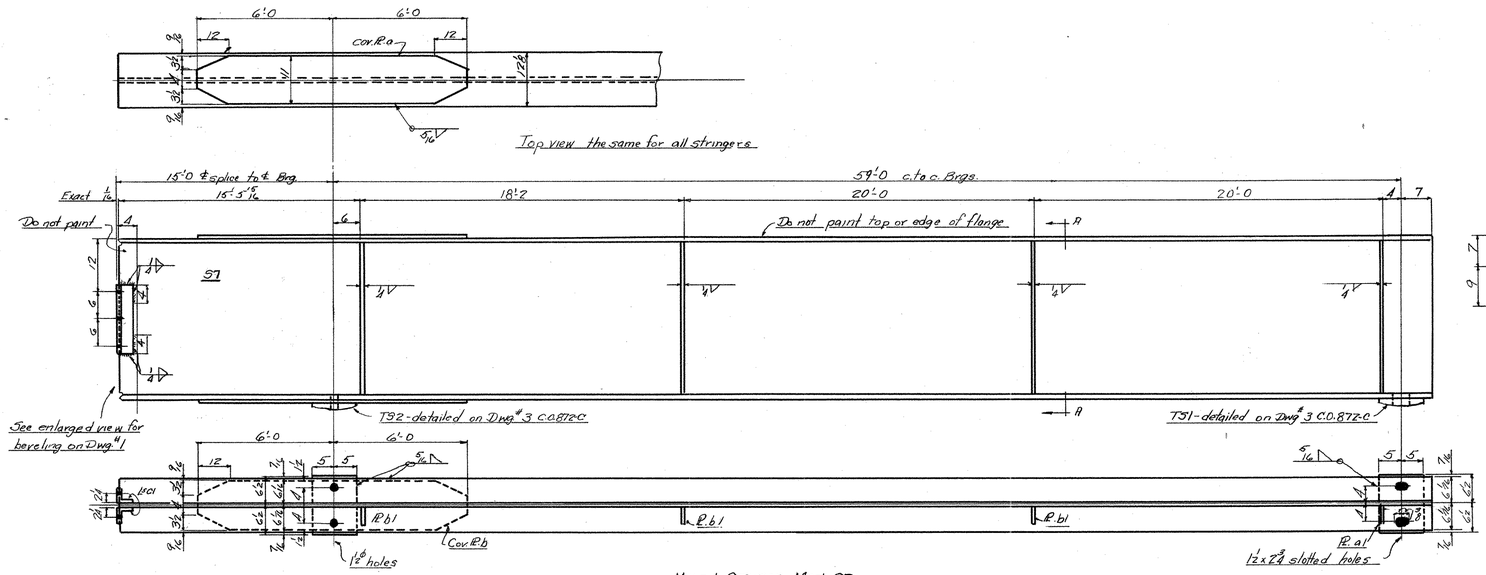

MAKE 1-STRINGER MARK S7

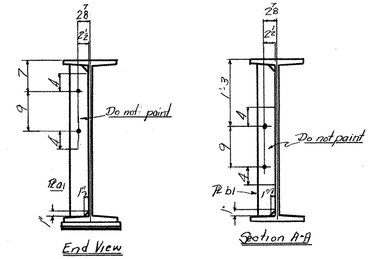

MATERIAL FOR S7

1		36 WF 182#	74'-6 15/16	o.d. 74'-8	
1	a	11 x 3/8 UM Cov. Pl.	12'-0	T. Web	
1	b	do " " "	12'-0	T. "	
1	a1	4 x 3/8 Pl.	2'-10 3/16	T. M2E "	ord. 20'-6
3	b1	do	2'-10 3/16	T. " "	
2	c1	3 1/2 x 3 1/2 x 3/8 Ls	1'-3	" "	
1	T31 - detailed on Dwg. #3-C.O. 872-C				
1	T32 - " " " 3-C.O. 872-C				

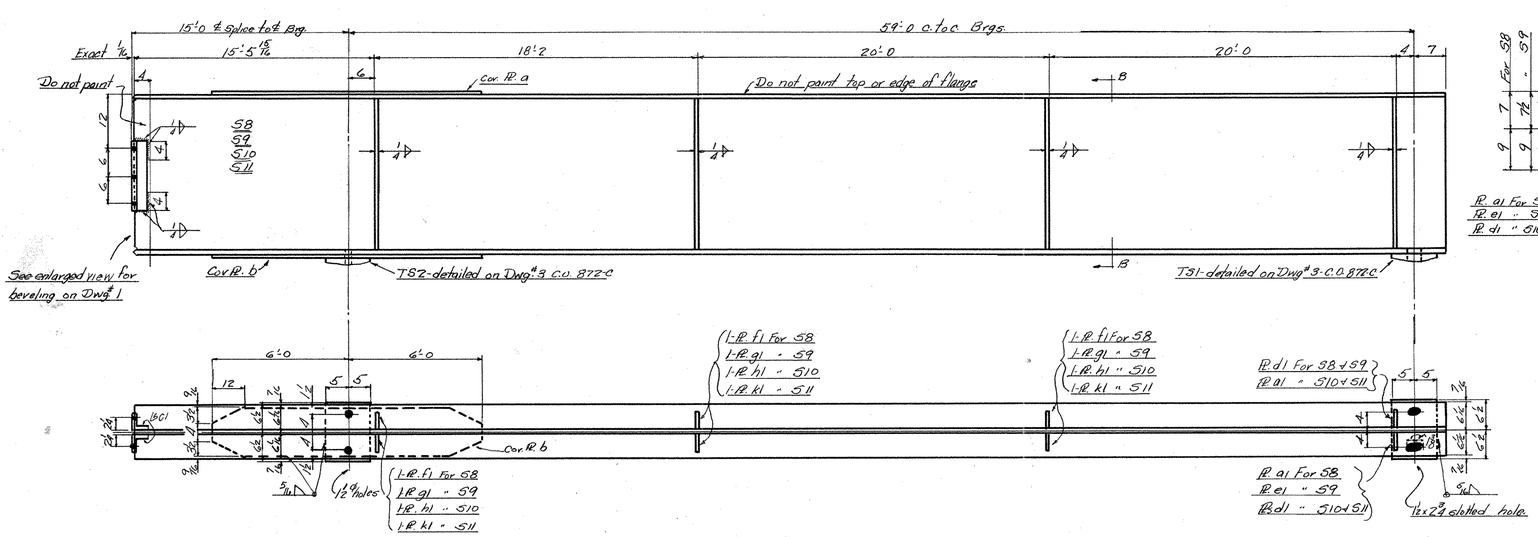

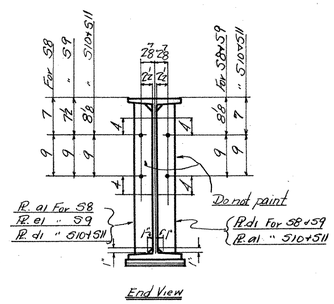

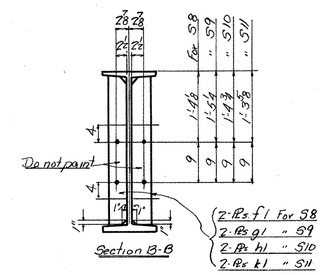

S8	S9	S10	S11				
1	1	1	1		36 WF 182#	74'-6 15/16	ord. 74'-8
1	1	1	1	a	11 x 3/8 UM Cov. Pl.	12'-0	T. web
1	1	1	1	b	do.	12'-0	" "
1		1	1	a1	4 x 3/8 Pl.	2'-10 3/16	" M2E "
1	1	1	1	d1	do.	2'-10 3/16	" " "
	1			e1	do.	2'-10 3/16	" " "
6				f1	do.	2'-10 3/16	" " "
	6			g1	do.	2'-10 3/16	" " "
		6		h1	do.	2'-10 3/16	" " "
			6	k1	do.	2'-10 3/16	" " "
2	2	2	2	c1	3 1/2 x 3 1/2 x 3/8 Ls	1'-3	"
1	1	1	1	T31 - detailed on Dwg. #3-C.O. 872-C			
1	1	1	1	T32 - " " " 3-C.O. 872-C			

ord. 20'-6

Make 1-Stringer Mark S8
" 1 " " S9
" 1 " " S10
" 1 " " S11

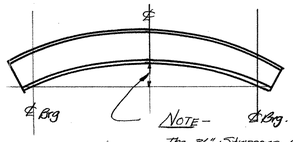

NOTE - The 36" Stringers are not to be cambered but if they are not rolled exactly true they are to be fabricated with Concave side down.

Note to Shop:-
Place shipping marks at left end of stringers as shown.

CONNECTICUT
STATE HIGHWAY DEPT.
TOWN OF DARIEN
KINGS HIGHWAY - NORTH
OVER
RELOCATION OF U.S. RTE. 1
THE BRUNALLI CONST. CO. CONTRACTOR

Stringers

SPECIFICATIONS:- STATE OF CONNECTICUT STATE HWY. DEPT. MARCH 1947 FORM 807
STRUCTURAL STEEL:- A.S.T.M. A7-46 13/16" OPEN HOLES unless noted
WELDING:- AMERICAN WELDING SOCIETY SPECIFICATIONS
SHOP PAINT:- ONE COAT OF ZINC CHROMATE AND IRON OXIDE AS PER CONNECTICUT STATE SPECIAL PROVISIONS
CONTACT SURFACES NOT PAINTED. (edge distance not given 1/2)
MACHINED SURFACES COATED WITH WHITE LEAD AND TALLOW
LAST ASSEMBLY MARK 6 SHOP LIST PAGES

PHOENIX BRIDGE COMPANY
CONTRACT 872
C. O. 872-B
DRAWING: 2
ENGINEER: J. J. Ford
DRAFTSMAN J. M. Williams
CHECKED BY C.D. 7/26/50
SCALE 3/4" = 1'-0
DATE July 13, 1950

35 53 160 06

STATE OF CONNECTICUT DEPT. OF TRANSPORTATION FORM NO. ENG. 6 ED. 2-86

F.H.W.A. REGION NO.	STATE	TOWN	FED. AID PROJ. NO.	PROJ. NO.	YEAR	ROUTE NO.	SHEET NO.	TOTAL SHEETS
1	CONN.	DARIEN	—	35-173	1992	I-95	1	40

CONNECTICUT DEPARTMENT OF TRANSPORTATION PLAN

FOR

REHABILITATION OF BRIDGES
STATE BRIDGE PROGRAM

IN THE TOWN OF

DARIEN

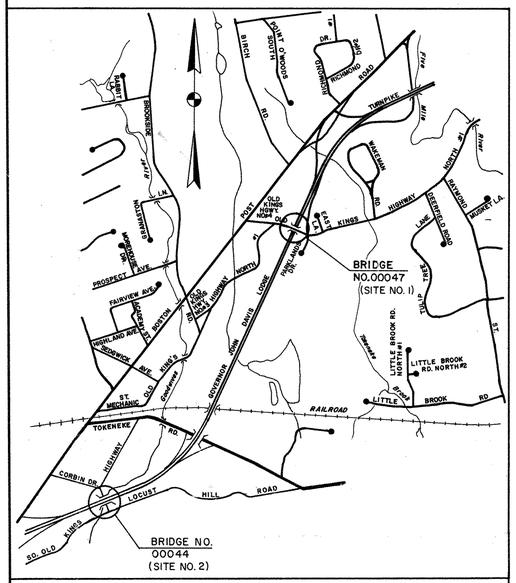

LOCATION PLAN

1000 0 1000 2000
SCALE IN FEET

TOWNS	BRIDGE NO'S	TOTAL LENGTH	DESCRIPTION
DARIEN	00047		I-95 UNDER OLD KINGS HIGHWAY NORTH
DARIEN	00044		I-95 OVER OLD KINGS HIGHWAY AND GOODWIVES RIVER

OTHER SCALES AS NOTED

STATE BRIDGE PROGRAM
TO BE MAINTAINED BY THE STATE

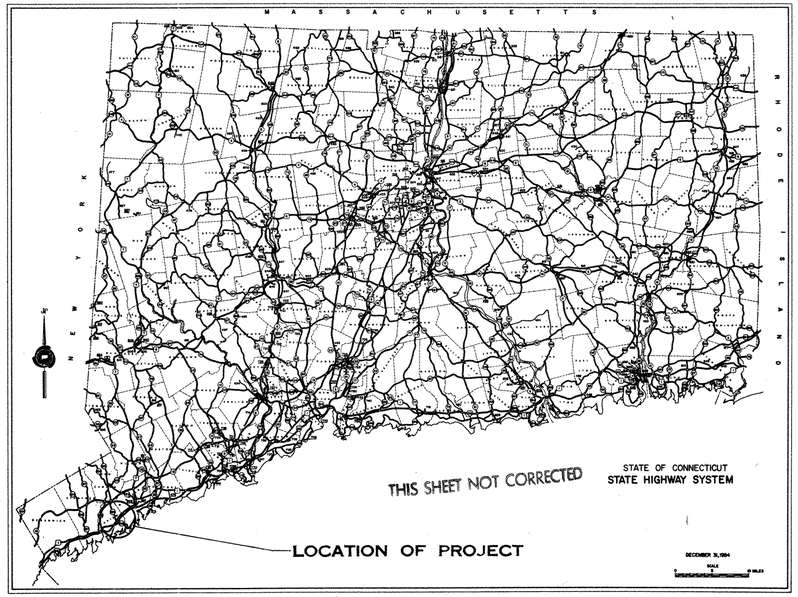

1988 SPECIFICATIONS, FORM NO. 814 INCLUDING SUPPLEMENT THERETO DATED JULY 1, 1992 GOVERN ALL ELEVATIONS ON THIS PROJECT BASED ON N.G.V.D. OF 1929

TOWN NO. 35
PROJECT NO. 173

LIST OF DRAWINGS

SHEET NO.	TITLE
1	TITLE SHEET
2-3	DETAILED ESTIMATE SHEET
4	ROADWAY DEVELOPMENT PLAN & PROFILE
5-6	M.P.T. PLANS - SITE #1
7-8	CROSS SECTIONS - SITE #1
9-21	BRIDGE PLANS - SITE #1
22	M.P.T. PLAN - SITE #2
23-36	BRIDGE PLANS - SITE #2
37-40	TRAFFIC SHEETS

STANDARD DRAWINGS

SHEET NO.	TITLE	F.H.W.A. APPROVAL DATE
222-D	SIDEWALK AND DRIVEWAYS	4-22-72
811-A	CURBING	10-13-86
816-A	GRANITE STONE TRANSITION CURBING	10-15-86
822-A	PRECAST CONCRETE MEDIAN BARRIER CURB FOR TEMP. TRAFFIC CONTROL	4-24-87
910-A	METAL BEAM RAIL (TYPE 'R-B' & TYPE 'MD-B')	4-16-79
911-B	METAL BEAM RAIL (TYPE R-B) ATTACHMENT TO BRIDGE PARAPET	
913-A	CHAIN LINK FENCE	3-18-77

Construction Started June 1, 1993
Construction Completed Nov 30, 1994
Plans Revised by B. MacAllister
Plans Checked by Jeffrey J. McGrath

BRIDGE NO. 00044

APPROVAL IS HEREBY CONSTRUED TO MEAN THAT THIS DESIGN WAS PREPARED BY PERSONS BELIEVED TO BE COMPETENT IN DESIGN AND THAT THE DESIGN APPEARS TO CONFORM TO APPLICABLE CRITERIA.
APPROVAL IS NOT TO BE CONSTRUED TO MEAN THAT ALL ASPECTS OF THE DESIGN HAVE BEEN PERSONALLY CHECKED BY THE UNDERSIGNED

SUBMITTED Thomas A. Harley 1992
December 18, 1992
ENGINEER OF DESIGN - THOMAS A. HARLEY

APPROVAL RECOMMENDED December 18, 1992
DIVISON MANAGER OF STATE DESIGN - BRADLEY J. SMITH

APPROVED Dec. 18 1992
DIRECTOR OF ENGINEERING - EARLE R. MUNROE

BRIDGE NO. 00047
DESIGNED BY
BOSWELL ENGINEERING
Signature: Stephen T. Boswell 3-19-92
STEPHEN T. BOSWELL, P.E. Date
CONNECTICUT PROFESSIONAL ENGINEER REG. No. 16847

REVIEWED AND RECOMMENDED
FOR CONSTRUCTION
GREINER INCORPORATED
DATE 12-17-92

STANDARD CONVENTIONS

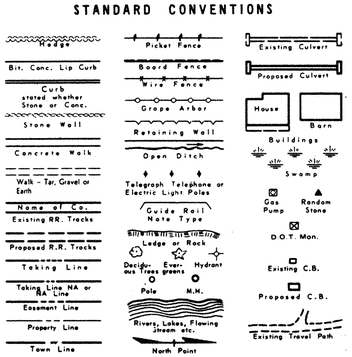

35-173

466-02

F.H.W.A. REGION NO.	STATE	TOWN	FED. AID PROJ. NO.	PROJ. NO.	YEAR	ROUTE NO.	SHEET NO.	TOTAL SHEETS
1	CONN.	DARIEN	—	35 - 173	1992	I-95	4	40

THIS SHEET CORRECTED

SCALE IN FEET 40 20 0 40

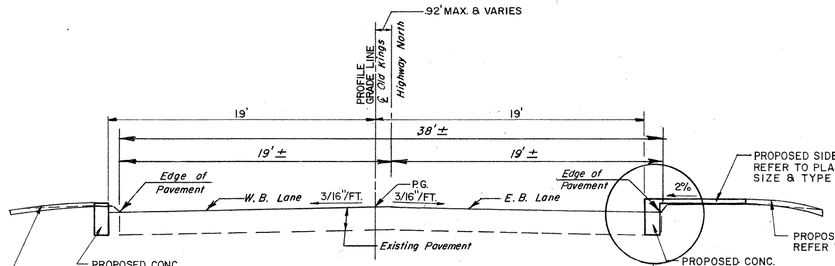

TYPICAL ROADWAY CROSS SECTION

N.T.S.

BRIDGE APPROACH REPAIR DETAIL

N.T.S.

FULL DEPTH PAVEMENT DETAIL

N.T.S.

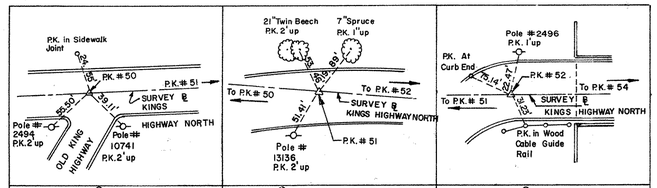

TIE FOR ℄ STA.3+70.25 KINGS HIGHWAY NORTH | TIE FOR ℄ STA.4+92.05, 10.65 LT. KINGS HIGHWAY NORTH | TIE FOR ℄ STA.6+15.82 KINGS HIGHWAY NORTH

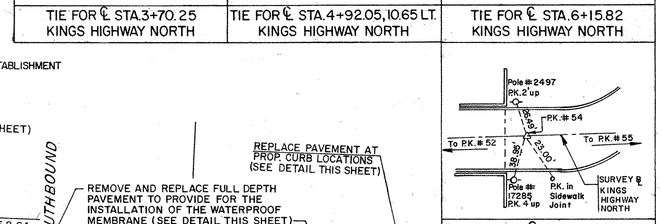

TIE FOR ℄ STA. 7+89.63 KINGS HIGHWAY NORTH

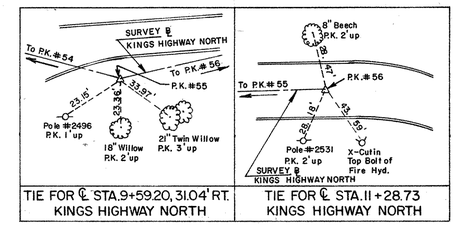

TIE FOR ℄ STA.9+59.20, 31.04' RT. KINGS HIGHWAY NORTH | TIE FOR ℄ STA.11+28.73 KINGS HIGHWAY NORTH

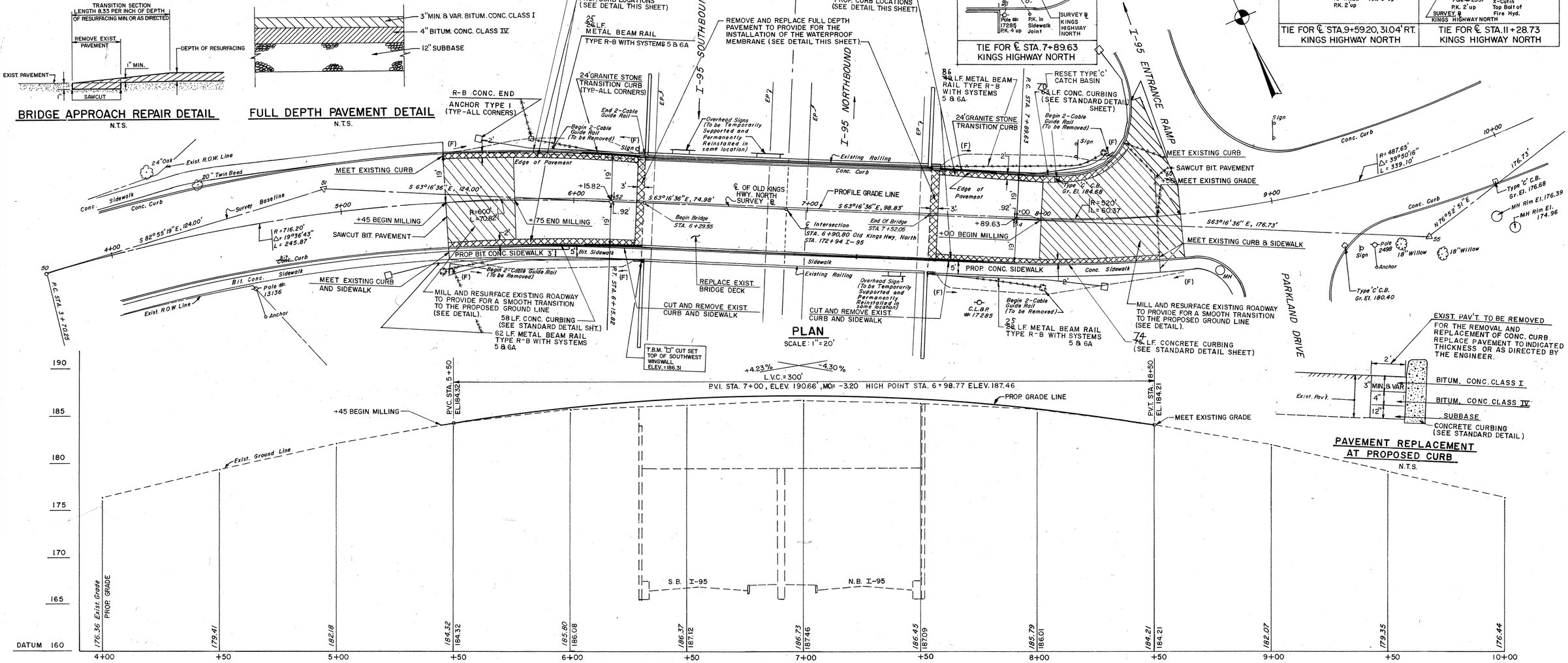

PLAN

SCALE: 1" = 20'

PROFILE ALONG ℄ OLD KINGS HIGHWAY NORTH

SCALE: HORIZ. 1" = 20'
VERT. 1" = 5'

PAVEMENT REPLACEMENT AT PROPOSED CURB

N.T.S.

REVISIONS			
NO.	DATE	DESCRIPTION	REV. SHEET NO.

SHT. 1 OF 1
CONN. D.O.T. BRIDGE NO. 00047

PLAN	BY	DATE	CHECKED BY	DATE
Surveyed				
Plotted	NT		EPC	
Traced	JHW		NT	
Designed	N		EPC	
New Const. Noted				
Top. Field Chk. Noted				

NOTEBOOK NO.

35-173 4/66-02 4

STATE OF CONNECTICUT - DEPT. OF TRANSPORTATION

FORM NO. ENG. 19A ED. 1-88

F.H.W.A. REGION NO.	STATE	TOWN	FED. AID PROJ. NO.	PROJ. NO.	YEAR	ROUTE NO.	SHEET NO.	TOTAL SHEETS
1	CONN.	DARIEN	—	35-173	1992	I-95	9	40

THIS SHEET CORRECTED

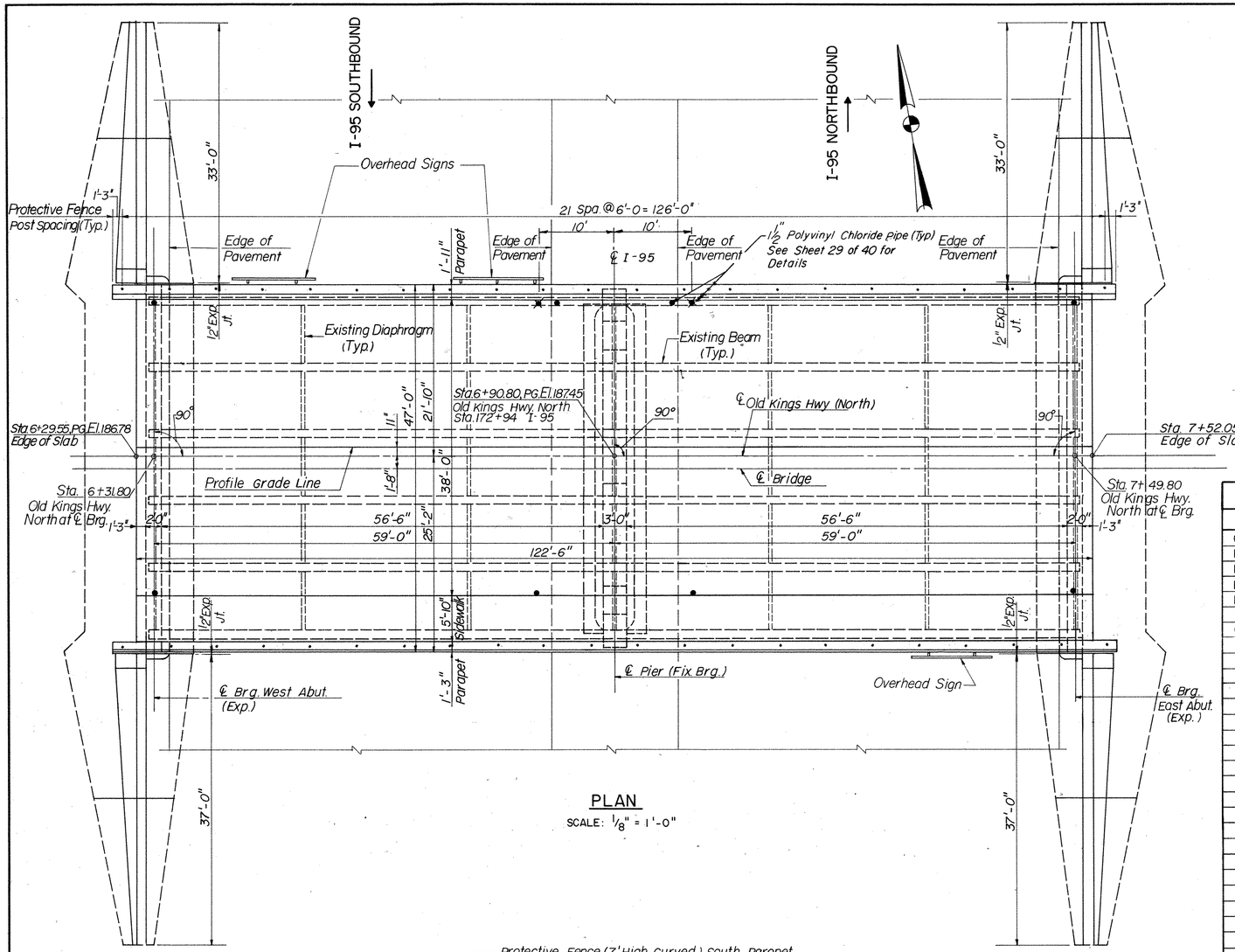

PLAN

SCALE: 1/8" = 1'-0"

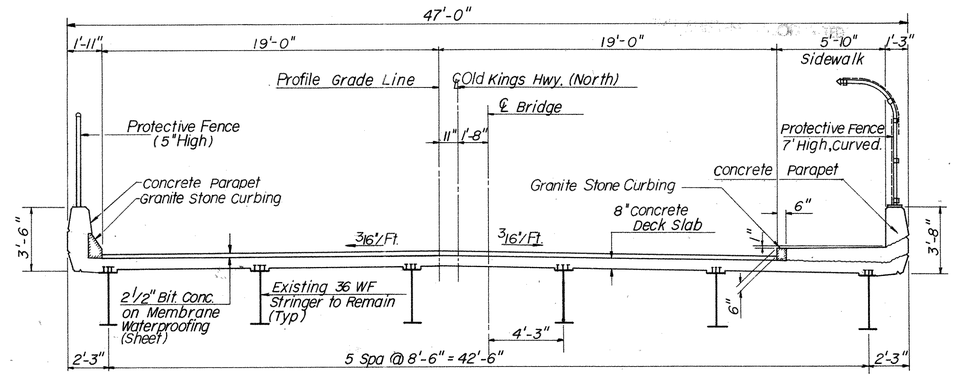

TYPICAL SECTION

SCALE: 1/4" = 1'-0"

GENERAL NOTES

SPECIFICATIONS
CONNECTICUT DEPARTMENT OF TRANSPORTATION FORM 814 (1988) WITH SUPPLEMENTS UP TO AND INCLUDING JULY 1, 1992 AND SPECIAL PROVISIONS.

DESIGN SPECIFICATIONS:
STANDARD SPECIFICATIONS FOR HIGHWAY BRIDGES (AASHTO) 1989 WITH THE INTERIM SPECIFICATIONS UP TO AND INCLUDING (1991), AS SUPPLEMENTED BY THE CONNECTICUT DEPARTMENT OF TRANSPORTATION BRIDGE DESIGN MANUAL (1985).

ALLOWABLE DESIGN STRESSES:
CLASS 'F' CONCRETE fc' = 4000 psi.
CLASS 'A' CONCRETE fc' = 3,000 psi
CLASS 'S' CONCRETE fc' = 3000 psi
REINFORCEMENT (A 615 GRADE 60) fs = 24,000 psi.
ALL NEW STRUCTURAL STEEL-ASTM A709, GRADE 50 W

CLASS 'F' CONCRETE:
SHALL BE USED FOR BRIDGE DECK AND PARAPET

CLASS 'S' CONCRETE:
SHALL BE USED FOR SUBSTRUCTURE REPAIR.

CLASS 'A' CONCRETE:
SHALL BE USED FOR SUBSTRUCTURE EXCEPT FOR REPAIR WORK.

LIVE LOAD:
HS 20-44

FUTURE PAVING ALLOWANCE:
NONE

FOR CONTINUATION OF GENERAL NOTES SEE SHEET NO. 2

QUANTITIES

ITEM	UNIT	AMOUNT
CLASS "A" CONCRETE	C.Y.	10
REMOVAL OF EXISTING MASONRY	C.Y.	7
REMOVAL OF EXISTING BRIDGE DECK	L.S.	1
BITUMINOUS CONCRETE - CLASS 1	TON	43
BITUMINOUS CONCRETE - CLASS 12	TON	29
MEMBRANE WATERPROOFING (SHEET)	S.Y.	539
CLASS "F" CONCRETE	C.Y.	204
8" x 16" SLOPED GRANITE STONE CURBING FOR BRIDGES	L.F.	129
6" x 8 1/2" GRANITE STONE CURBING FOR BRIDGES	L.F.	129
DEFORMED STEEL BARS - EPOXY COATED	LBS.	58900
DRILLING AND GROUTING ANCHOR BOLTS	L.F.	111
DRILLING AND GROUTING REINFORCING BARS	L.F.	303
PENETRATING SEALER PROTECTIVE COMPOUND	S.F.	1425
ASPHALTIC PLUG EXPANSION JOINT SYSTEM	L.F.	76
PROTECTIVE FENCE (5' HIGH)	L.F.	126
PROTECTIVE FENCE (7'-0" HIGH CURVED)	L.F.	126
BEARING REPLACEMENT WITH ELASTOMERIC BEARING PADS	EA.	18
1" CLOSED CELL ELASTOMER	C.I.	16920
TEMPORARY WALKWAY	L.S.	1
JACKING EXISTING GIRDERS	EA.	18
DISCONNECT & RECONNECT EXISTING DIAPHRAGMS	EA.	28
CLASS "S" CONCRETE	C.Y.	5
COPOLYMER CEMENTITOUS MORTAR PATCH	GAL.	5
SHEAR CONNECTORS	EA.	2,016
EPOXY INJECTION CRACK REPAIR	L.F.	4
DOWEL BAR SPLICER SYSTEM - EPOXY COATED	EA.	952
SPOT PAINTING OF STRUCTURE	S.F.	1032
SPECIAL PREPARATION TREATMENT	S.F.	1032
TEMPORARY SUPPORT SYSTEM	L.S.	1
DISPOSAL OF DEBRIS (CONTAMINATED)	C.Y.	5
DISPOSAL OF DEBRIS (HAZARDOUS)	C.Y.	5
CONTAINMENT & COLLECTION OF SURFACE PREPARATION DEBRIS	L.S.	1
TEMPORARY PRECAST CONC. BARRIER CURB. (STRUCTURE)	L.F.	240
RELOCATED TEMP PRECAST CONC. BARRIER CURB. (STRUCTURE)	L.F.	480

NOTICE TO BRIDGE INSPECTORS

THE DEPARTMENT'S BRIDGE SAFETY PROCEDURES REQUIRE THIS BRIDGE TO BE INSPECTED FOR, BUT NOT LIMITED TO, ALL APPROPRIATE COMPONENTS INDICATED IN THE GOVERNING MANUALS FOR BRIDGE INSPECTION. ATTENTION MUST BE GIVEN TO INSPECTING THE FOLLOWING SPECIAL COMPONENTS AND DETAILS, (THE LISTING OF COMPONENTS FOR SPECIFIC ATTENTION SHALL NOT BE CONSTRUED TO REDUCE THE IMPORTANCE OF INSPECTION OF ANY OTHER COMPONENT OF THE STRUCTURE.) THE FREQUENCY OF INSPECTION OF THIS STRUCTURE SHALL BE IN ACCORDANCE WITH THE GOVERNING MANUALS FOR BRIDGE INSPECTION, UNLESS OTHERWISE DIRECTED BY THE ENGINEER OF BRIDGES AND STRUCTURES, OR NOTED BELOW.

COMPONENT OR DETAIL	BR.	SH.	REF.

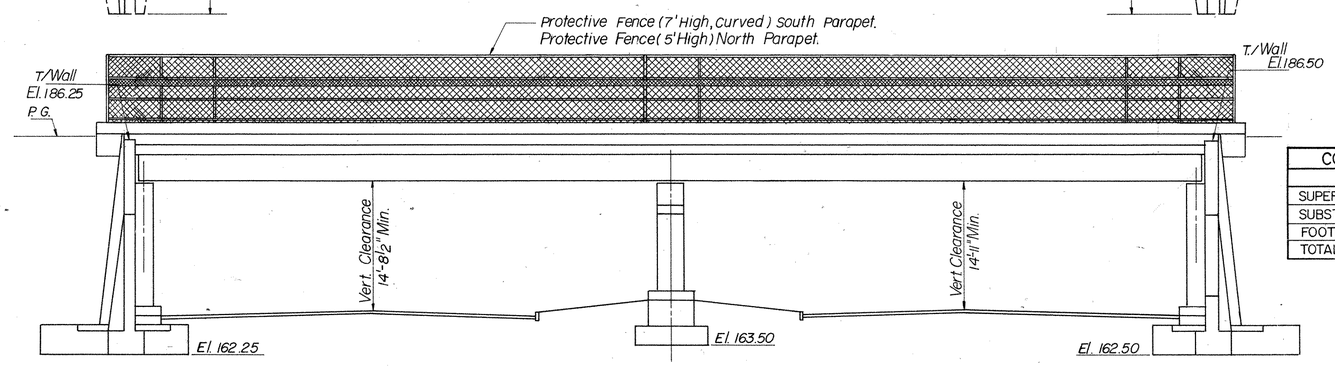

ELEVATION

SCALE: 1/8" = 1'-0"

CONCRETE DISTRIBUTION		
ITEM	UNIT	TOTAL
SUPERSTRUCTURE	C.Y.	204
SUBSTRUCTURE	C.Y.	11
FOOTING	C.Y.	0
TOTAL	C.Y.	215

INSPECTION OF FIELD WELDS		
METHOD	UNIT	TOTAL
RADIOGRAPHIC OR ULTRASONIC	IN.	0
ULTRASONIC	IN.	0
MAGNETIC PAPTICLE	L.F.	0

THE INFORMATION, INCLUDING ESTIMATED QUANTITIES OF WORK SHOWN ON THESE SHEETS IS BASED ON LIMITED INVESTIGATIONS BY THE STATE AND IS IN NO WAY WARRANTED TO INDICATE THE TRUE CONDITIONS OR ACTUAL QUANTITIES OR DISTRIBUTION OF QUANTITIES OF WORK WHICH WILL BE REQUIRED.

NO.	DATE	DESCRIPTION

REVISIONS

STATE OF CONNECTICUT
DEPARTMENT OF TRANSPORTATION

DARIEN

OLD KINGS HIGHWAY NORTH OVER U.S. INTERSTATE 95

GENERAL PLAN

ENGINEER BOSWELL ENGINEERING
DESIGNER CD./AK. DRAFTER DMP./KT. CHECKER L.T.
APPROVED GGB. DATE 12/92
STRUCTURE NO. BRIDGE LOG NO. 00047 STRUCTURE SHEET NO. 1 of 13

35-173

466-02

9

F.H.W.A. REGION NO.	STATE	TOWN	FED. AID PROJ. NO.	PROJ. NO.	YEAR	ROUTE NO.	SHEET NO.	TOTAL SHEETS
I	CONN.	DARIEN	—	35-173	1992	I-95	10	40

THIS SHEET NOT CORRECTED

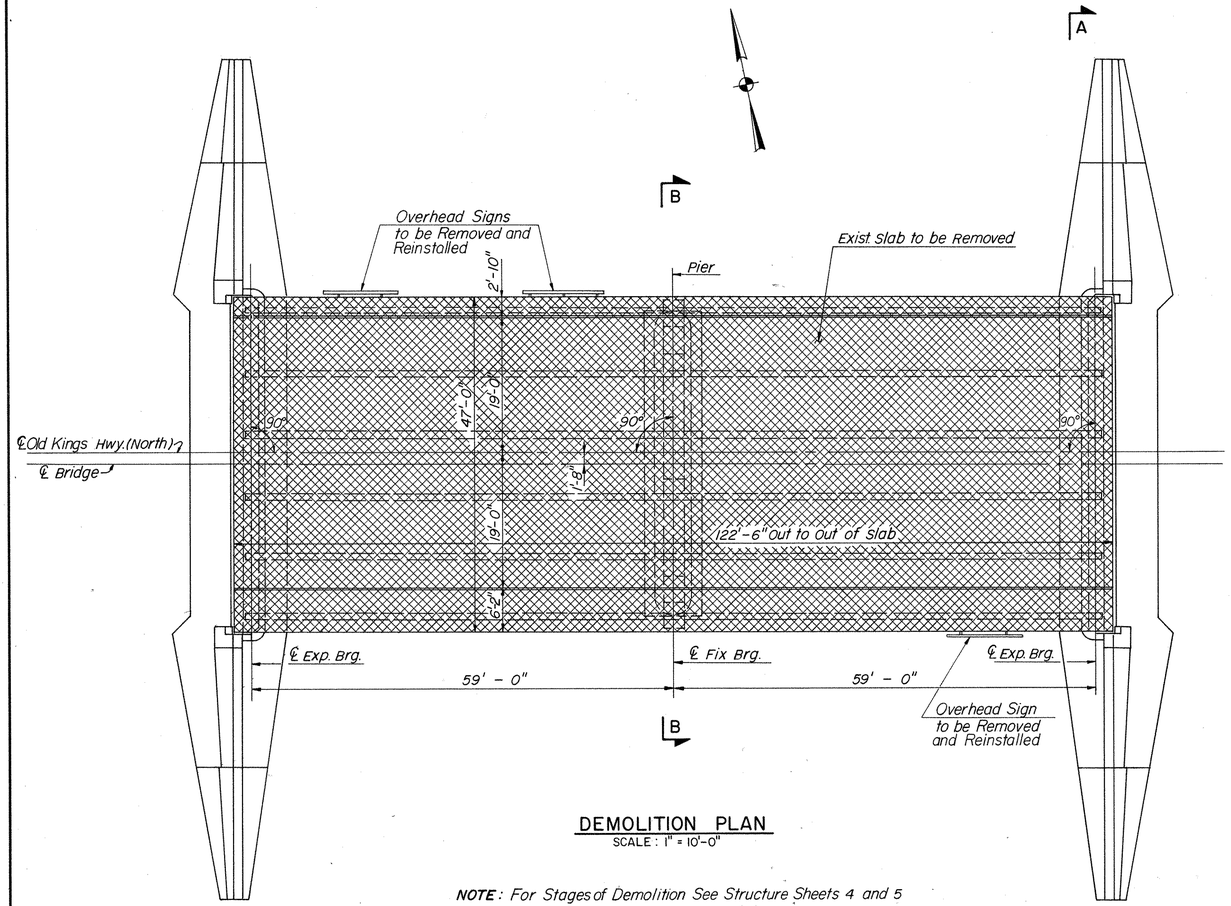

DEMOLITION PLAN

SCALE : 1" = 10'-0"

***NOTE**: For Stages of Demolition See Structure Sheets 4 and 5*

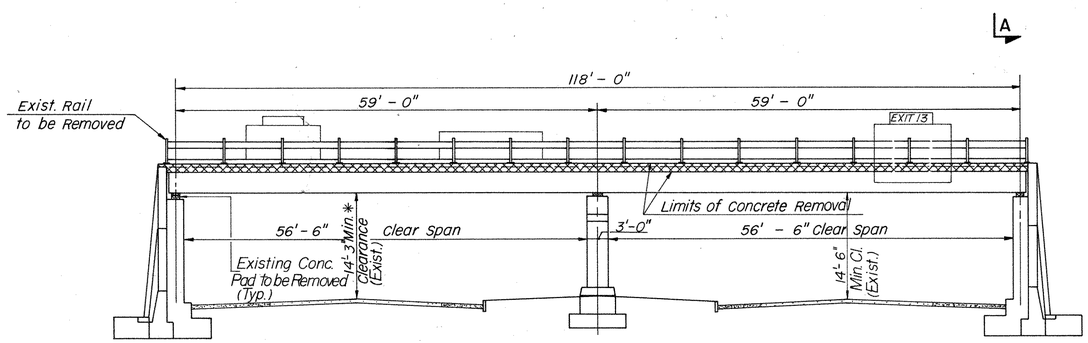

ELEVATION

SCALE: 1" = 10' - 0"

* NOTE : THE EXISTING MIN. VERTICAL CLEARANCE SHALL BE INCREASED TO 14'-8 1/2"

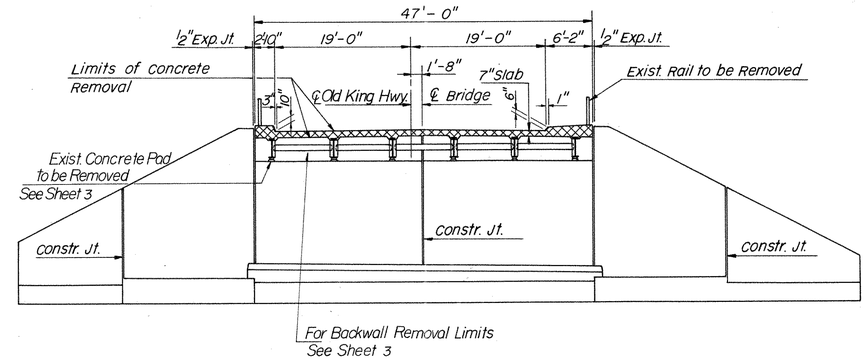

SECTION A - A

SCALE : 1" = 10'-0"

WEST ABUTMENT - OPPOSITE HAND

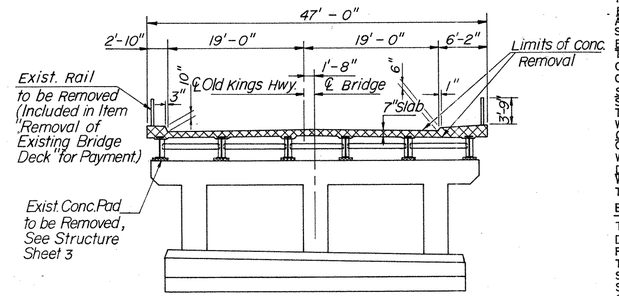

SECTION B - B

SCALE: 1" = 10'-0"

LEGEND :

Indicates Limits of Concrete Deck Removal Removal shall be Done in Stages.

GENERAL NOTES CON'T.

JOINT SEAL:
SEE SPECIAL PROVISIONS.

EXPOSED EDGES:
EXPOSED EDGES OF CONCRETE SHALL BE BEVELED 1"x1" UNLESS DIMENSIONED OTHERWISE.

REMAIN-IN-PLACE FORMS
USE OF REMAIN-IN-PLACE FORMS IS NOT ALLOWED.

PARRAFIN:
THE COST OF FURNISHING AND APPLYING PARRAFIN IS INCLUDED IN THE ITEM CLASS "F" CONCRETE.

EPOXY COATED REINFORCING BARS:
ALL REINFORCEMENT AND ADDITIONAL BARS IN THE DECK SLAB SHALL BE EPOXY COATED.

BITUMINOUS CONCRETE OVERLAY:
THIS SHALL CONSIST OF TWO LIFTS. THE FIRST SHALL BE BITUMINOUS CONCRETE-CLASS (12) (1" THICK) AND THE SECOND SHALL BE BITUMINOUS CONCRETE-CLASS (1) (1 1/2" THICK).

SPECIAL PREPARATION TREATMENT:
SPECIAL PREPARATION TREATMENT SHALL BE APPLIED TO THOSE AREAS THAT EXHIBIT HEAVY RUST OR SCALE, WHICH WILL BE DEFINED BY THE ENGINEER.

CONSTRUCTION JOINTS:
CONSTRUCTION JOINTS, OTHER THAN THOSE SHOWN ON THE PLANS, WILL NOT BE PERMITTED WITHOUT PRIOR APPROVAL OFTHE ENGINEER.

DECIMAL DIMENSIONS:
WHEN DIMENSIONS ARE GIVEN TO LESS THAN THREE DECIMAL PLACES, THE OMITTED DIGITS SHALL BE ASSUMED TO BE ZEROS.

EXISTING CONDITIONS :
THESE CONTRACT DOCUMENTS HAVE BEEN DEVELOPED FROM EXISTING PLANS AND A LIMITED FIELD INVESTIGATION. ACTUAL CONDITIONS MAY WARRANT MODIFICATION IN THE CONSTRUCTION DETAILS AND/OR QUANTITIES. THE CONTRACTOR SHALL VERIFY ALL DIMENSIONS AND ELEVATIONS WHICH CAN AFFECT THE SATISFACTORY COMPLETION OF THE PROPOSED WORK. FIELD VERIFICATIONS SHALL BE PERFORMED PRIOR TO THE PREPARATION OF SHOP DRAWINGS AND THE FABRICATION OF ALL ITEMS.

PAINT
SELECTED AREAS OF EXISTING STRUCTURAL STEEL SHALL BE CLEANED AND PAINTED. SEE SPECIAL PROVISIONS. THE COLOR OF THE TOP COAT MATERIAL ON THE STRUCTURAL STEEL SHALL CONFORM TO FEDERAL STANDARD COLOR NO. 24424 (APPROXIMATELY THE DEPARTMENT'S STD. BRIDGE COLOR NUMBER 503 (LIGHT GREEN)).

EXISTING PLANS:
EXISTING DRAWINGS CAN BE FOUND AT THE DEPARTMENT'S ADMINISTRATION BUILDING LOCATED AT 24 WOLCOTT HILL ROAD, WETHERSFIELD.

THE INFORMATION, INCLUDING ESTIMATED QUANTITIES OF WORK SHOWN ON THESE SHEETS IS BASED ON LIMITED INVESTIGATIONS BY THE STATE AND IS IN NO WAY WARRANTED TO INDICATE THE TRUE CONDITIONS OR ACTUAL QUANTITIES OR DISTRIBUTION OF QUANTITIES OF WORK WHICH WILL BE REQUIRED.

NO.	DATE	DESCRIPTION

REVISIONS

STATE OF CONNECTICUT
DEPARTMENT OF TRANSPORTATION

DARIEN

OLD KINGS HIGHWAY NORTH OVER U.S. INTERSTATE 95

DECK DEMOLITION PLAN

ENGINEER BOSWELL ENGINEERING		
DESIGNER CD.	DRAFTER C.L.	CHECKER L.T.
APPROVED GGB.	DATE 12/92	
STRUCTURE NO.	BRIDGE LOG NO. 00047	STRUCTURE SHEET NO. 2 OF 13

STATE OF CONNECTICUT - DEPT. OF TRANSPORTATION

FORM NO ENG 15A ED. 1-88

F.H.W.A. REGION NO.	STATE	TOWN	FED. AID PROJ. NO.	PROJ. NO.	YEAR	ROUTE NO.	SHEET NO.	TOTAL SHEETS
1	CONN.	DARIEN	—	35 - 173	1992	I-95	11	40

THIS SHEET NOT CORRECTED

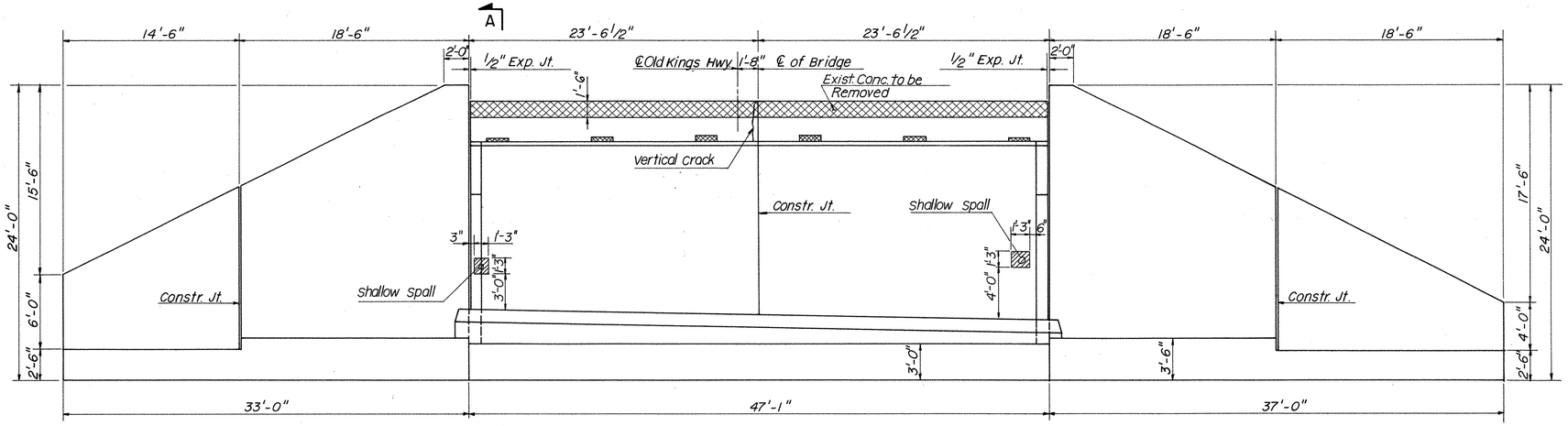

ELEVATION - EAST ABUTMENT

SCALE: 3/16" = 1'-0"

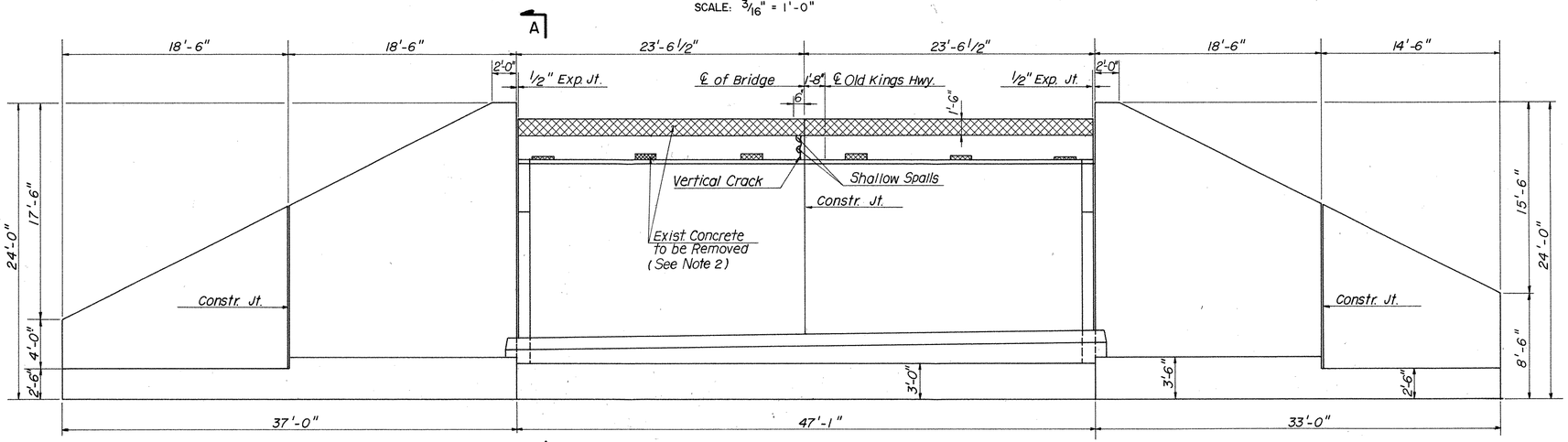

ELEVATION - WEST ABUTMENT

SCALE: 3/16" = 1'-0"

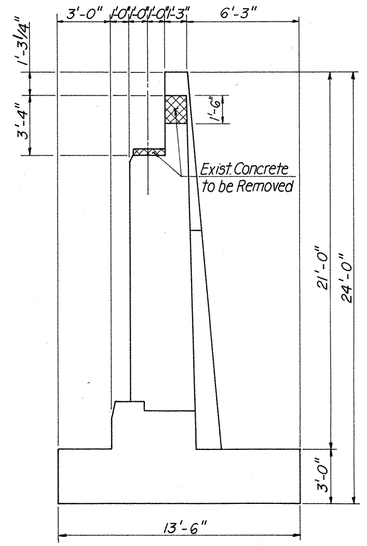

SECTION A-A

SCALE: 1/4" = 1'-0"

NOTES:

1. FOR TYPICAL SUBSTRUCTURE REPAIR DETAILS SEE STRUCTURE SHEET 8
2. REMOVAL OF ABUTMENT BACKWALLS, ABUTMENT SEATS AND PIER SEATS SHALL BE INCLUDED IN THE ITEM "REMOVAL OF EXISTING MASONRY."
3. FOR STAGE DEMOLITION, SEE STRUCTURE SHEET 4.
4. FOR BACKWALL AND BRIDGE SEAT MODIFICATION DETAILS, SEE STRUCTURE SHEET 6.
5. FOR PIER MODIFICATION DETAILS, SEE STRUCTURE SHEET 7.

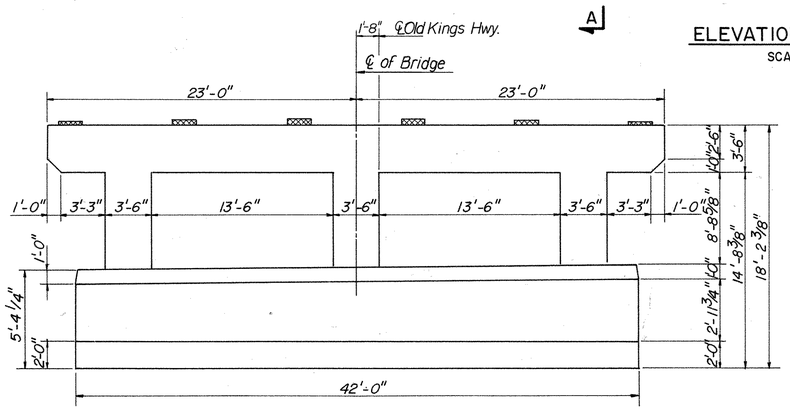

ELEVATION - PIER LOOKING WEST

SCALE: 3/16" = 1'-0"

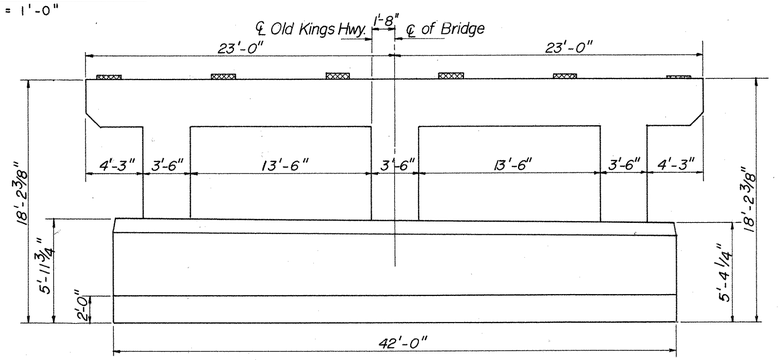

ELEVATION - PIER LOOKING EAST

SCALE: 3/16" = 1'-0"

THE INFORMATION, INCLUDING ESTIMATED QUANTITIES OF WORK SHOWN ON THESE SHEETS IS BASED ON LIMITED INVESTIGATIONS BY THE STATE AND IS IN NO WAY WARRANTED TO INDICATE THE TRUE CONDITIONS OR ACTUAL QUANTITIES OR DISTRIBUTION OF QUANTITIES OF WORK WHICH WILL BE REQUIRED.

LEGEND

- APPROXIMATE LIMITS OF SHALLOW SPALL REPAIR
- INDICATES LIMITS OF CONC. REMOVAL. REMOVAL SHALL BE DONE IN STAGES.
- CRACK LINE REPAIR WITH EPOXY INJECTION CRACK REPAIR

NO.	DATE	DESCRIPTION

REVISIONS

STATE OF CONNECTICUT
DEPARTMENT OF TRANSPORTATION

DARIEN

OLD KINGS HIGHWAY NORTH OVER U.S. INTERSTATE 95

SUBSTRUCTURE DEMOLITION PLAN

ENGINEER BOSWELL ENGINEERING

DESIGNER CD. | DRAFTER D.M.P., KT. | CHECKER L.T.

APPROVED GGB. | DATE 12/92

STRUCTURE NO. | BRIDGE LOG NO. 00047 | STRUCTURE SHEET NO. 3 OF 13

35-173

466-02

11

STATE OF CONNECTICUT - DEPT. OF TRANSPORTATION

FORM NO. ENG. 158 ED 3-86

F.H.W.A. REGION NO.	STATE	TOWN	FED. AID PROJ. NO.	PROJ. NO.	YEAR	ROUTE NO.	SHEET NO.	TOTAL SHEETS
1	CONN.	DARIEN	—	35-173	1992	I-95	14	40

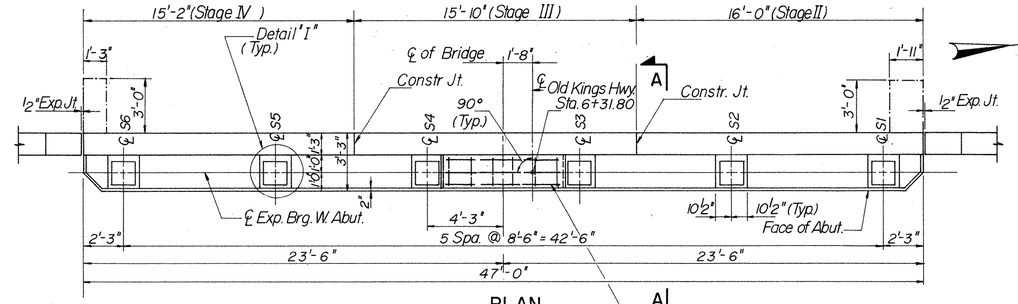

PLAN

SCALE: 1/4" = 1'-0"

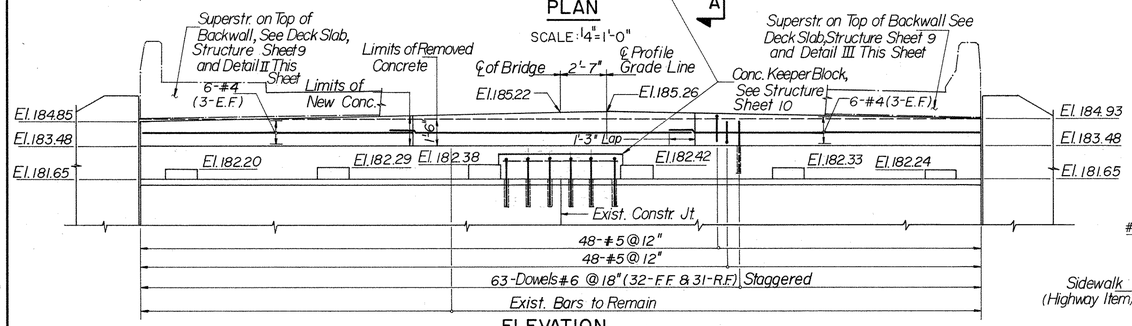

ELEVATION

SCALE: 1/4" = 1'-0"

WEST ABUTMENT

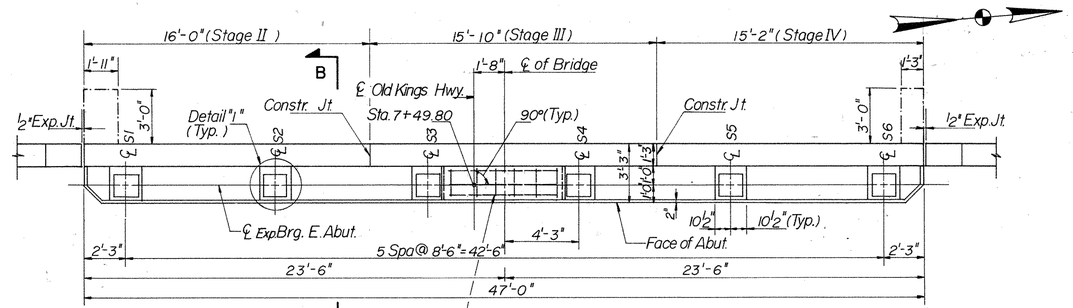

PLAN

SCALE: 1/4" = 1'-0"

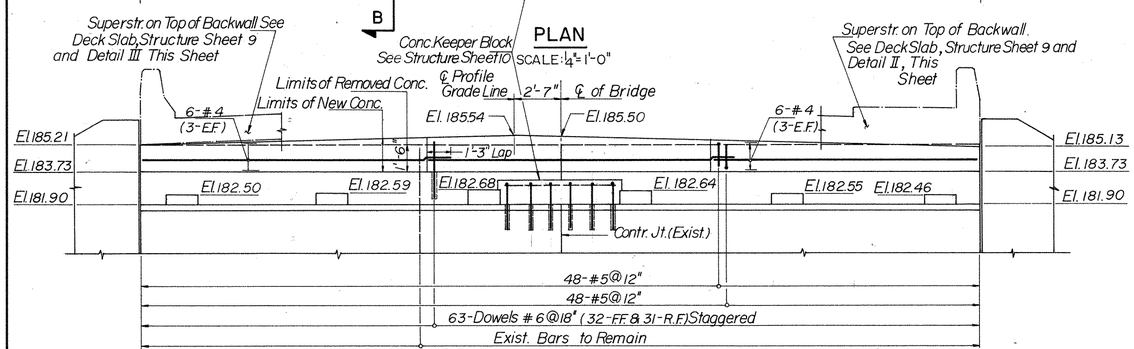

ELEVATION

SCALE: 1/4" = 1'-0"

EAST ABUTMENT

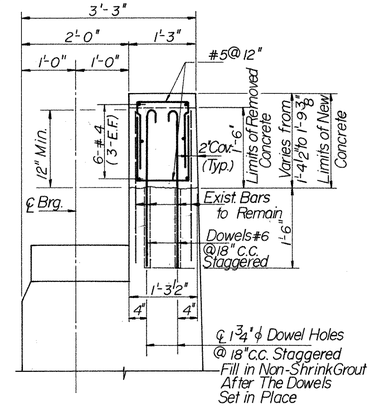

SECTION A-A

SCALE: 3/4" = 1'-0"

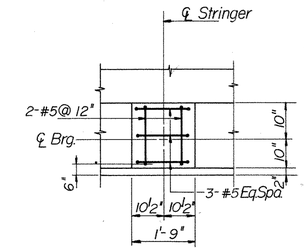

DETAIL "I"

SCALE: 1/2" = 1'-0"

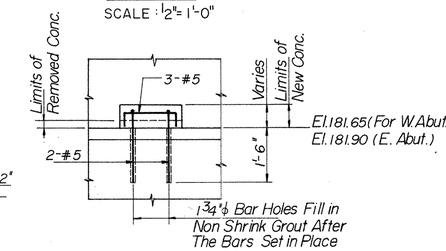

ELEVATION

SCALE: 1/2" = 1'-0"

THIS SHEET NOT CORRECTED

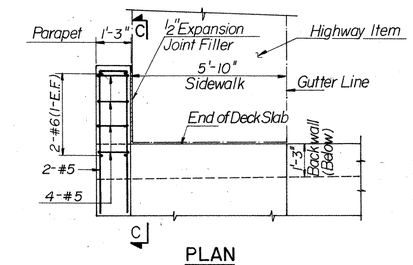

PLAN

DETAIL II

SCALE: 3/8" = 1'-0"

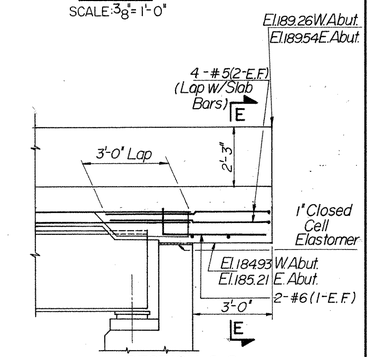

SECTION C-C

SCALE: 3/8" = 1'-0"

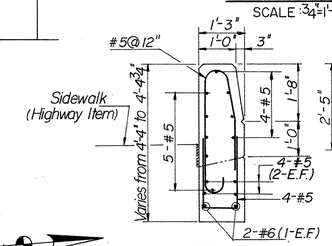

SECTION E-E

SCALE: 1/2" = 1'-0"

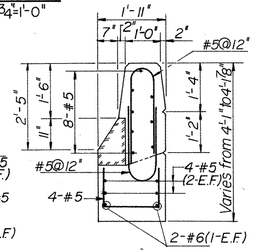

SECTION F-F

SCALE: 1/2" = 1'-0"

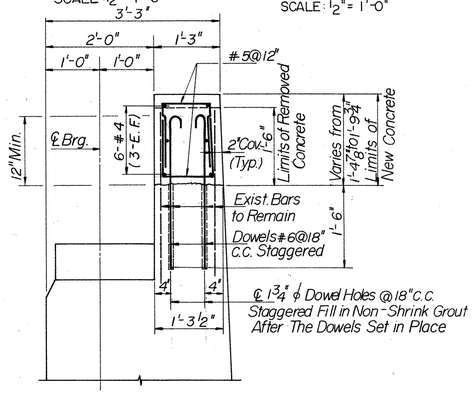

SECTION B-B

SCALE: 3/4" = 1'-0"

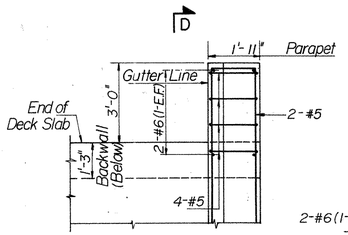

PLAN

SCALE: 3/8" = 1'-0"

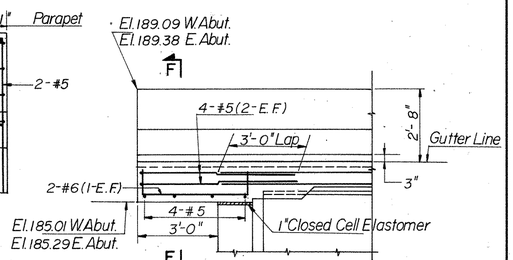

SECTION D-D

SCALE: 3/8" = 1'-0"

DETAIL III

SCALE: 3/8" = 1'-0"

NOTE: WORK THIS SHEET WITH STRUCTURE SHEET 9

NOTE:

THE PROPOSED SEAT ELEVATIONS WERE DETERMINED BY ADDING 5 INCHES TO THE BEARING SEAT ELEVATIONS TAKEN FROM THE ORIGINAL ABUTMENT PLAN DATED MARCH 1953. THE CONTRACTOR SHALL VERIFY THESE ELEVATIONS AND ADJUST THE BEARING SEAT ELEVATIONS AND PROFILE GRADE, AS REQUIRED, TO RAISE THE EXISTING SUPERSTRUCTURE STEEL BY 5 INCHES AND PROVIDE THE MIN. HAUNCH AND SLAB THICKNESS INDICATED ON SHEET S-9.

NO.	DATE	DESCRIPTION

REVISIONS

CONNECTICUT
DEPARTMENT OF TRANSPORTATION

DARIEN

OLD KINGS HIGHWAY NORTH OVER

U.S. INTERSTATE 95

WEST AND EAST ABUTMENTS

ENGINEER BOSWELL ENGINEERING

DESIGNER CD. | DRAFTER KT. | CHECKER LT.

APPROVED GGB. | DATE 12/92

STRUCTURE NO. | BRIDGE LOG NO. 00047 | STRUCTURE SHEET NO. 6 OF 13

35-173

466-02

14

THIS SHEET NOT CORRECTED

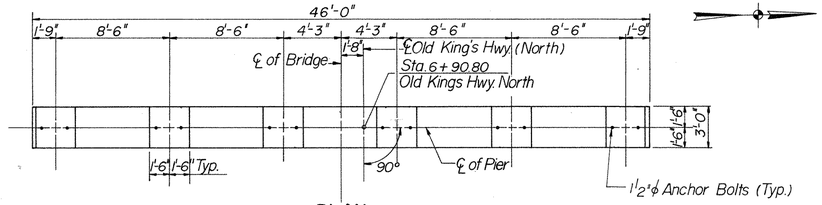

PLAN

SCALE: 3/16" = 1'-0"

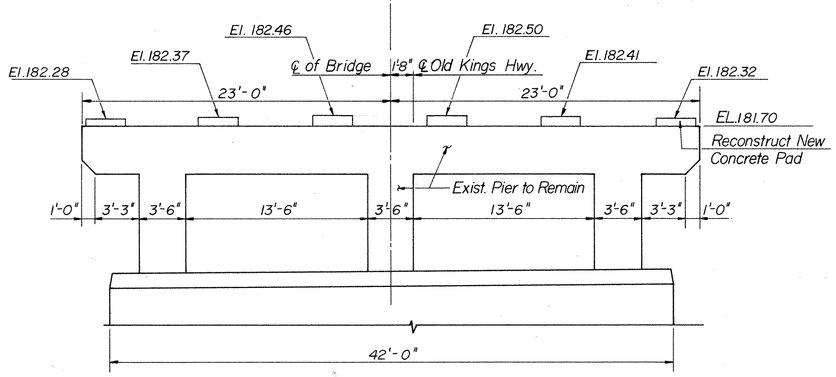

ELEVATION

SCALE: 3/16" = 1'-0"

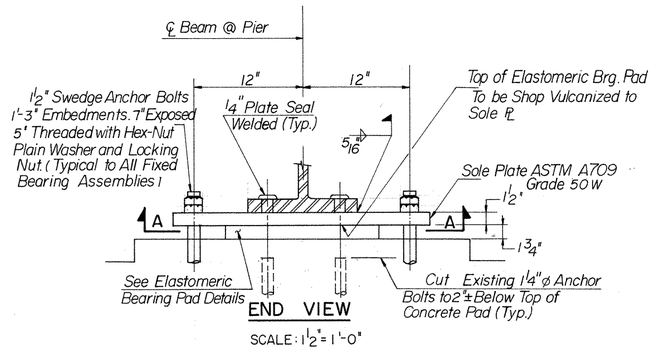

END VIEW

SCALE: 1½" = 1'-0"

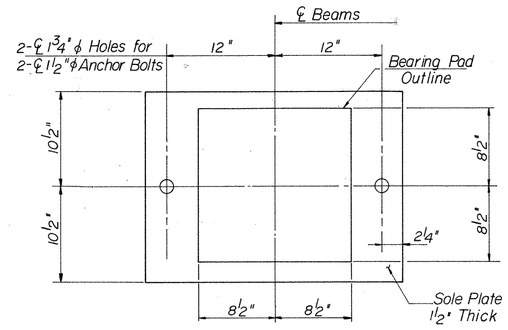

SECTION A-A

SCALE: 1½" = 1'-0"

FIXED BEARING

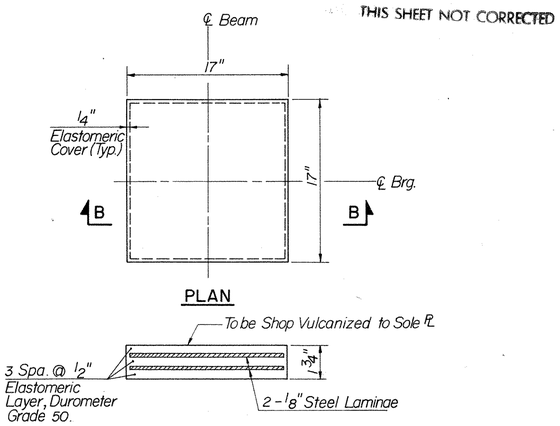

PLAN

SECTION B-B

ELASTOMERIC BEARING PAD DETAIL

N.T.S.

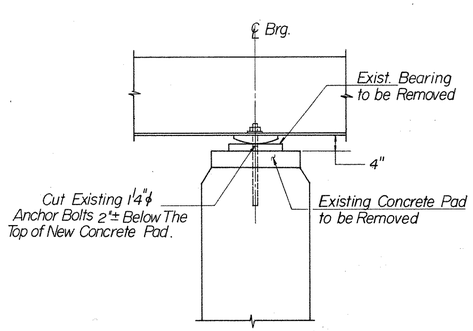

EXISTING FIXED BEARING

PIER

SCALE: N.T.S.

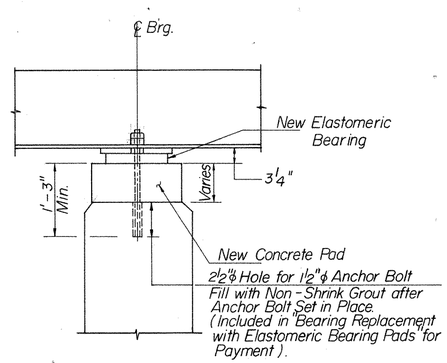

NEW FIXED BEARING

PIER

SCALE: N.T.S.

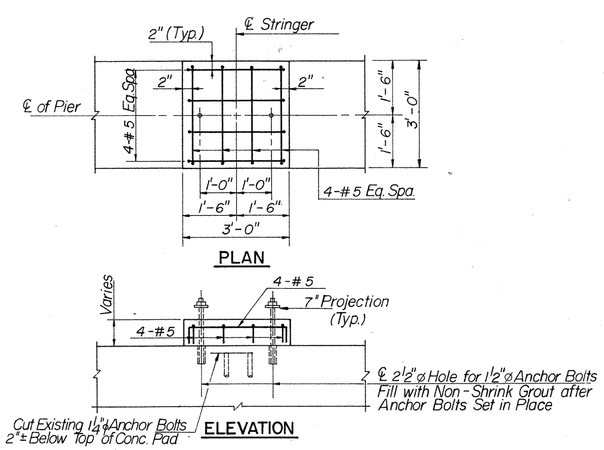

TYPICAL DETAIL OF NEW CONCRETE PAD

SCALE: ½" = 1'-0"

REPLACMENT OF BRIDGE BEARING.

1. FOR CONSTRUCTION SEQUENCE OF BEARING REPLACEMENT AND CRITERIA OF NEW BEARING ASSEMBLY MATERIALS, SEE ITEM "BEARING REPLACEMENT WITH ELASTOMERIC BEARING PADS" IN SPECIAL PROVISIONS.
2. MIN. CAPACITY OF NEW PIER BEARINGS SHALL BE 173^k (DEAD LOAD = 118^k, LIVE LOAD = 55^k)
3. SOLE PLATES INCLUDED IN "BEARING REPLACEMENT WITH ELASTOMERIC BEARING PADS" FOR PAYMENT.
4. FOR EXPANSION BEARING DETAILS, SEE STRUCTURE SHEET 10.

NO.	DATE	DESCRIPTION

REVISIONS

CONNECTICUT

DEPARTMENT OF TRANSPORTATION

DARIEN

OLD KINGS HIGHWAY NORTH OVER U.S. INTERSTATE 95

PIER RECONSTRUCTION DETAIL

ENGINEER BOSWELL ENGINEERING

DESIGNER CD. DRAFTER KT. CHECKER LT.

APPROVED GGB. DATE 12/92

STRUCTURE NO. BRIDGE LOG NO. 00047 STRUCTURE SHEET NO. 7 OF 13

THIS SHEET NOT CORRECTED

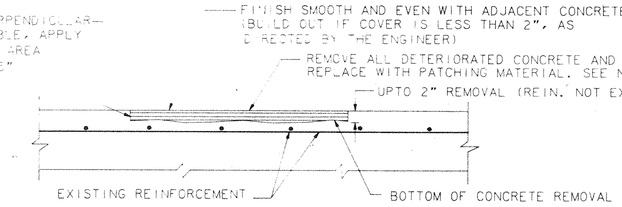

PATCH ABOVE TOP REINFORCING STEEL

NOT TO SCALE

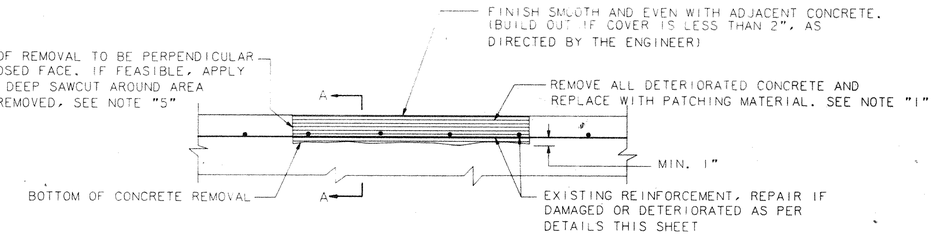

PATCH BELOW TOP REINFORCING STEEL

NOT TO SCALE

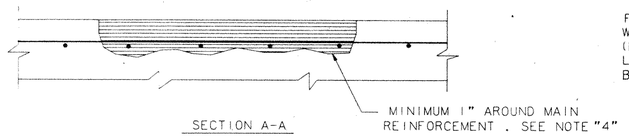

SECTION A-A

TOP SURFACE PATCHING

NOT TO SCALE

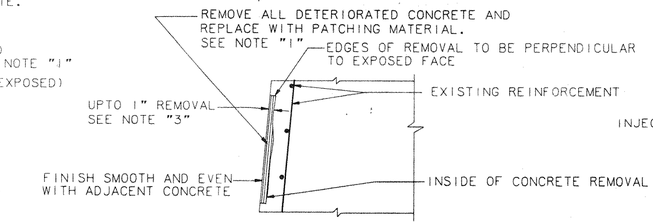

REPAIR OF SHALLOW DEPTHS (UPTO 1" REMOVAL)

NOT TO SCALE

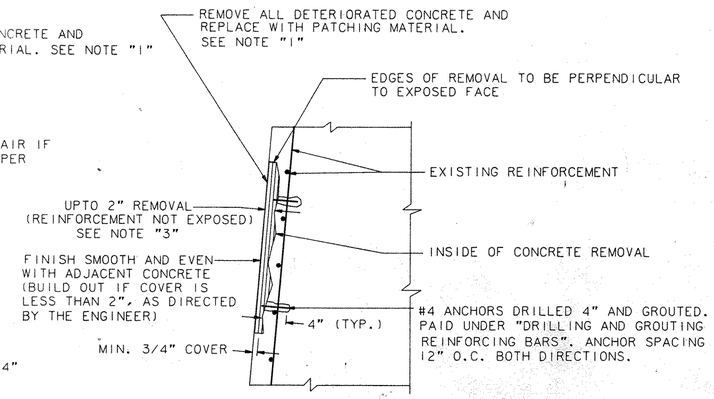

REPAIRS OF DEPTHS MORE THAN 1" AND UPTO 2"

NOT TO SCALE

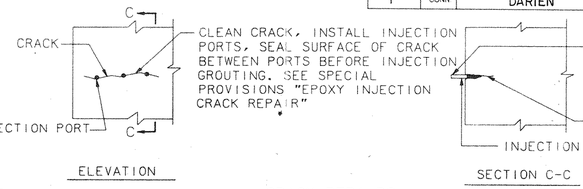

ELEVATION

SECTION C-C

CRACK REPAIRS

NOT TO SCALE

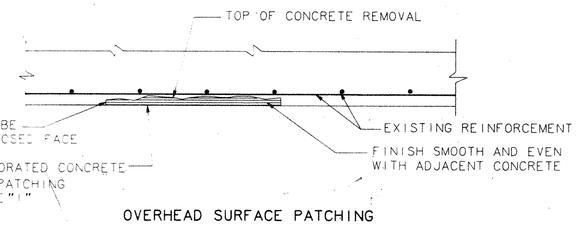

OVERHEAD SURFACE PATCHING

NOT TO SCALE

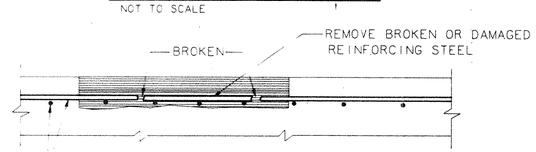

SECTION SHOWING CONCRETE REMOVAL AREA

NOT TO SCALE

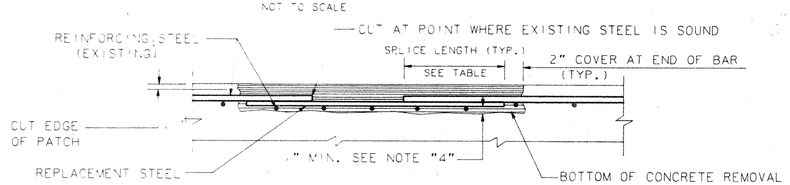

REPAIR OF DAMAGED REINFORCING STEEL

NOT TO SCALE

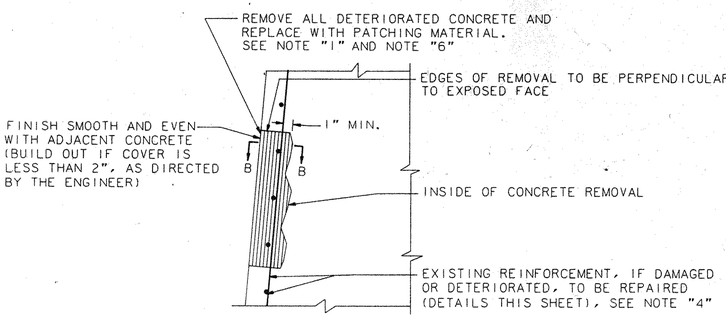

REPAIRS OF DEPTHS OVER 2" (REINF. EXPOSED)

NOT TO SCALE

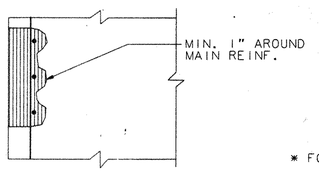

SECTION B-B

VERTICAL SURFACE REPAIRS

NOT TO SCALE

NOTES

NOTE "1" : TYPES AND METHODS OF CONCRETE REPAIRS

(a) CONCRETE PATCHING :

(i) TOP AND VERTICAL SURFACES

FOR DETERIORATED AREAS AT LEAST 1" IN DEPTH, REPAIR USING "CLASS "S" CONCRETE", SEE SPECIAL PROVISIONS.

FOR SMALL DETERIORATED AREAS LESS THAN 1" IN DEPTH, REPAIR USING "COPOLYMER CEMENTITIOUS MORTAR PATCH". SEE SPECIAL PROVISIONS

~~FOR VERTICAL SURFACES WITH SEVERAL PATCHES, REPAIR BY SHOTCRETE.~~

(ii) OVERHEAD SURFACES

WHERE FEASIBLE, REPAIR BY SHOTCRETE, IF SHOTCRETE IS NOT POSSIBLE, REPAIR USING "COPOLYMER CEMENTITIOUS MORTAR PATCH". SEE SPECIAL PROVISIONS.

(b) CRACK REPAIR

(i) IN ABUTMENTS, BACKWALLS AND WINGWALLS

IF THE BACKSIDE (IN CONTACT WITH EARTH) IS VISIBLE AND ACCESSIBLE, REPAIR THE CRACKS (FROM THE BACKSIDE SURFACE) BY INJECTION GROUTING. SEE SPECIAL PROVISION "EPOXY INJECTION CRACK REPAIR".

IF THE BACKSIDE IS NOT ACCESSIBLE, THE CRACKS SHALL NOT BE REPAIRED.

(ii) IN PIERS

CRACKS WITH WIDTHS EQUAL TO OR GREATER THAN 0.005" WILL BE REPAIRED BY INJECTION GROUTING. SEE SPECIAL PROVISION "EPOXY INJECTION CRACK REPAIR.

CRACKS LESS THAN 0.005" IN WIDTH WILL NOT BE REPAIRED BUT WILL BE SEALED BY THE APPLICATION OF "PROTECTIVE COATING FOR CONCRETE" (SEE SPECIAL PROVISION) AFTER ALL CONCRETE REPAIRS HAVE BEEN COMPLETED. FOR LIMITS OF APPLICATION SEE STR. SHT.

NOTE "2" : FOR AREAS TO BE REPAIRED, SEE SUBSTRUCTURE PLANS ON STR. SHT.3 AND GENERAL NOTES ON STR. SHT.1 ~~FOR BAR SIZE SEE STR. SHT.~~

NOTE "3" : IN AREAS WHERE THE REINFORCING STEEL, ON REMOVAL OF DETERIORATED CONCRETE, HAS LESS THAN HALF OF ITS SURFACE EXPOSED, THE REINFORCEMENT SHALL BE COATED WITH EPOXY BONDING COMPOUND PRIOR TO PLACING THE PATCHING MATERIAL. THE COST OF THIS COATING IS INCLUDED IN THE APPLICABLE REPAIR PAY ITEM.

NOTE "4" : IF AFTER CONCRETE REMOVAL THE REINFORCING STEEL HAS AT LEAST ONE HALF OF ITS SURFACE AREA EXPOSED, THE CONCRETE SHALL BE FURTHER REMOVED TO A DEPTH OF 1" AROUND THE STEEL.

NOTE "5" : THE 1/2" DEPTH SAWCUT SHALL BE INCLUDED IN THE CONTRACT BID PRICE OF THE APPLICAELE REPAIR PAY ITEM.

NOTE "6" : IF THE AREA OR DEPTH OF REMOVAL IS DEEMED TO BE EXCESSIVE, THE ENGINEER SHALL BE IMMEDIATELY NOTIFIED BEFORE CONTINUING REMOVAL WORK.

TABLE OF SPLICE LENGTH

	BAR SIZE	MIN. SPLICE LENGTH
MAIN REINF. @ ≥ 6"O.C. *	#6	1'- 9"
	#7	2'- 4"
	#8	3'- 0"
TRANS. REINF. @ ≥ 6"O.C. *	#4	1'- 4"
	#5	1'- 4"

* FOR BARS SPACED < 6" O.C. MULTIPLY TABLE VALUES BY 1.25

THE INFORMATION, INCLUDING ESTIMATED QUANTITIES OF WORK SHOWN ON THESE SHEETS IS BASED ON LIMITED INVESTIGATIONS BY THE STATE AND IS IN NO WAY WARRANTED TO INDICATE THE TRUE CONDITIONS OR ACTUAL QUANTITIES OR DISTRIBUTION OF QUANTITIES OF WORK WHICH WILL BE REQUIRED.

NO.	DATE	DESCRIPTION

REVISIONS

5/2/88

STATE OF CONNECTICUT
DEPARTMENT OF TRANSPORTATION

DARIEN

OLD KINGS HIGHWAY NORTH
OVER
U.S. INTERSTATE 95

SUBSTRUCTURE REPAIR DETAILS

ENGINEER BOSWELL ENGINEERING

DESIGNER CD. | DRAFTER KT. | CHECKER LT.

APPROVED GGB. | DATE 12/92

STRUCTURE NO. | BRIDGE LOG NO. 00047 | STRUCTURE SHEET NO. 8 of 13

35-173

466-02

16

STATE OF CONNECTICUT - DEPT. OF TRANSPORTATION

FORM NO. ENG. 158 ED 3-86

F.H.W.A. REGION NO.	STATE	TOWN	FED. AID PROJ. NO.	PROJ. NO.	YEAR	ROUTE NO.	SHEET NO.	TOTAL SHEETS
1	CONN.	DARIEN	—	35 - 173	1992	I-95	17	40

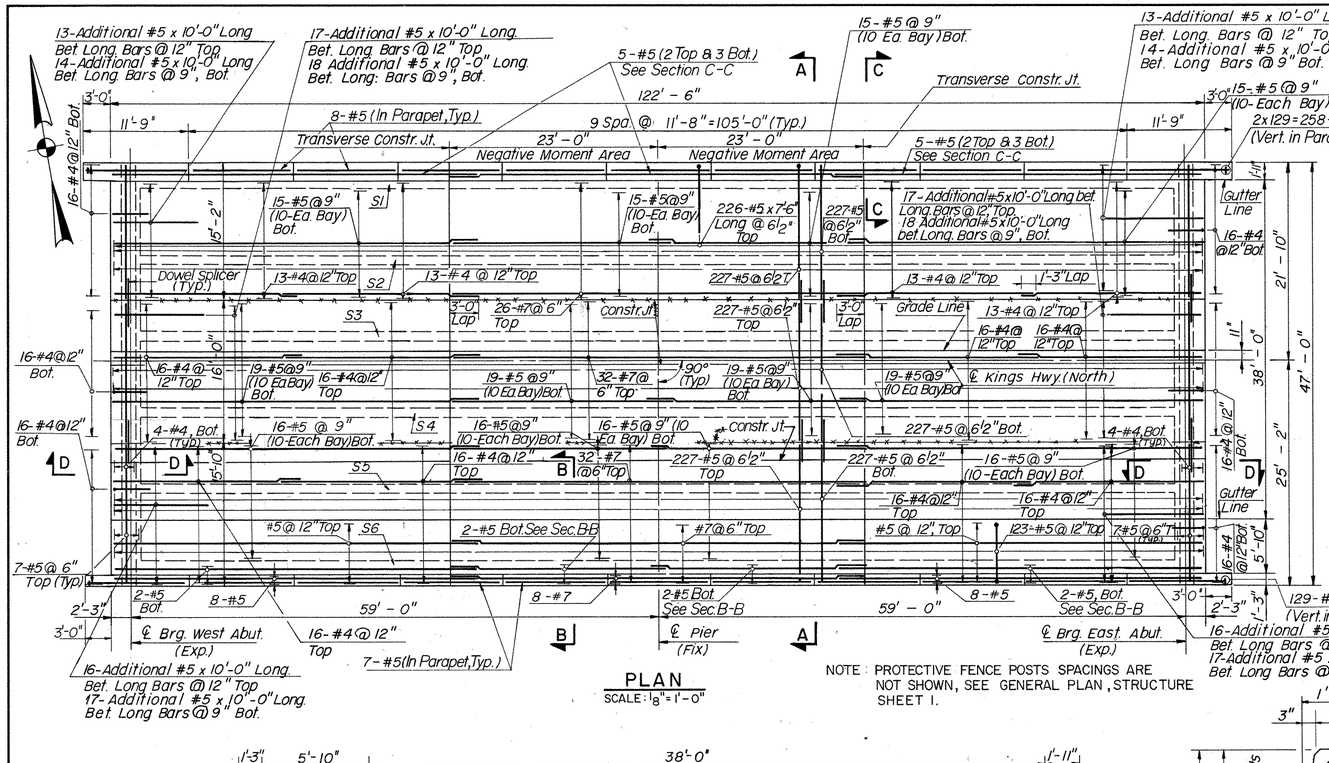

PLAN

SCALE: 1/8" = 1'-0"

NOTE: PROTECTIVE FENCE POSTS SPACINGS ARE NOT SHOWN, SEE GENERAL PLAN, STRUCTURE SHEET 1.

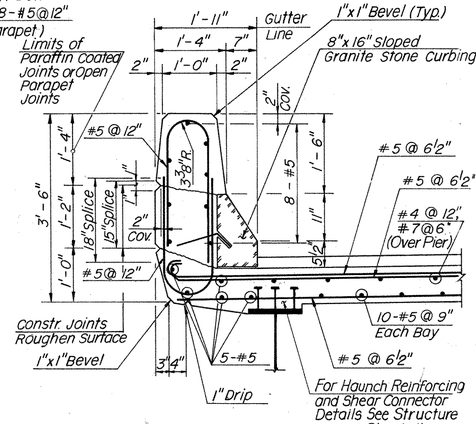

SECTION C-C

SCALE: 3/4" = 1'-0"

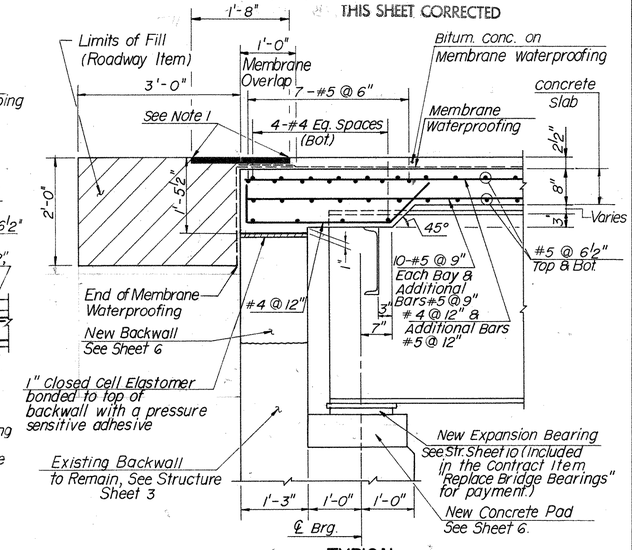

TYPICAL SECTION D-D

SCALE: 3/4" = 1'-0"

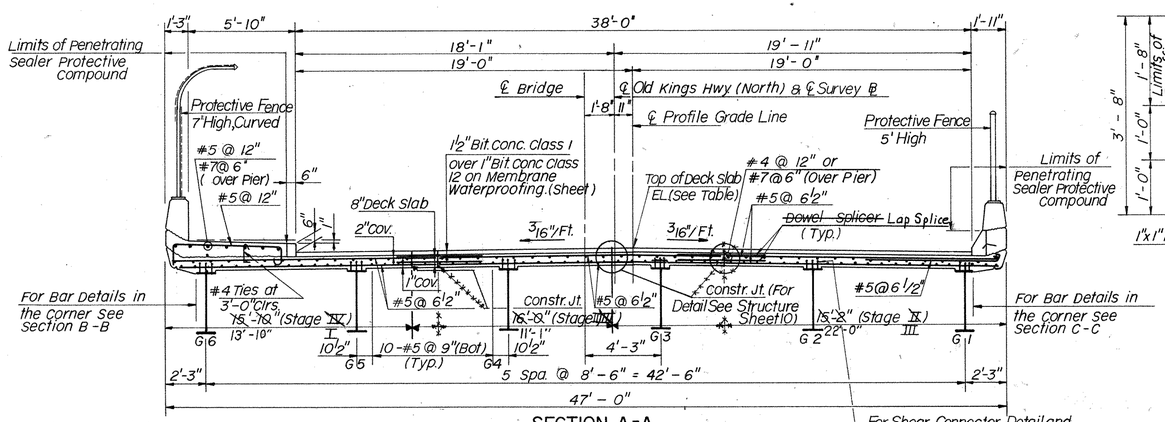

SECTION A-A

SCALE: 1/4" = 1'-0"

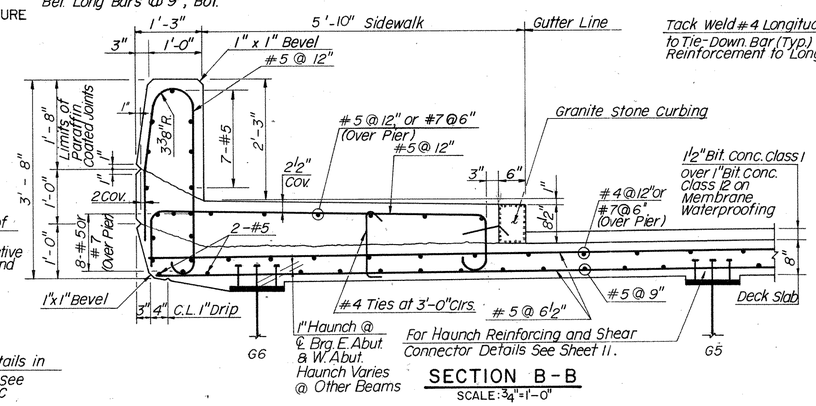

SECTION B-B

SCALE: 3/4" = 1'-0"

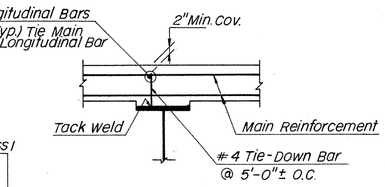

TIE DOWN DETAIL

SCALE: 3/4" = 1'-0"

NOTES:

- Tie-Down Bars Do Not Exclude the use of chairs for Supporting the Reinforcement Mat.
- The Cost of Furnishing and Placing Tie-Down Bars to be Included in the Contract Item "Deformed Steel Bars-Epoxy Coated".
- Tie-Down Bars and Longitudinal Bars Shall Clear Shear Connectors.

T/STEEL ELEVATIONS

BEAM NO	℄ BRG. W. ABUT.	℄ PIER	℄ BRG. E. ABUT.
G1	185.54	185.69	185.80
G2	185.63	185.78	185.89
G3	185.72	185.87	185.98
G4	185.68	185.91	185.94
G5	185.59	185.82	185.85
G6	185.50	185.73	185.76

NOTE: IF FINAL TOP OF STEEL ELEVATIONS VARY FROM VALUES PRESENTED IN TABLE ABOVE, CONTRACTOR SHALL ADJUST FINISHED DECK SLAB ELEVATIONS TO PROVIDE A HAUNCH OF ONE INCH OVER BEAM G6 AT CENTER LINE BRG. W. ABUT. AND E. ABUT.

FINISHED DECK SLAB ELEVATIONS

STATION	P.G. (11" LT. FROM ℄ OLD KINGS HWY)	LT. GUTT. (19" LT. FROM P.G.)	RT. GUTT. (19" RT. FROM P.G.)	
6+29.55	186.78	186.48	186.48	Begin of Deck
+30	186.79	186.49	186.49	
+31.80	186.82	186.52	186.52	
+40	186.97	186.67	186.67	
+50	187.12	186.82	186.82	
+60	187.25	186.95	186.95	
6+90.80	187.45	187.15	187.15	
+70	187.34	187.04	187.04	
+80	187.41	187.11	187.11	
+90	187.45	187.15	187.15	
7+00	187.46	187.16	187.16	
+10	187.44	187.14	187.14	
+20	187.40	187.10	187.10	
+30	187.32	187.02	187.02	
+40	187.22	186.92	186.92	
7+49.80	187.09	186.79	186.79	
+50	187.10	186.80	186.80	
+52.05	187.06	186.76	186.76	End of Deck

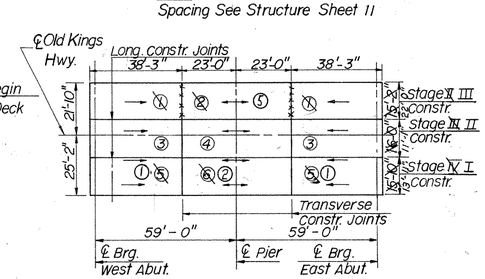

SLAB POURING SEQUENCE

N.T.S.

NOTES:

1. Saw Cut Overlay to full Depth (2½" Max) and Fill 20" Strip with Hot Rubber Asphalt Binder, cost of Saw Cutting and Sealing to be Paid for at the Contract Unit Price per Foot for Expansion
2. Existing Shear connectors may Remain. Any Connector Damaged during Slab Removal shall be Replaced. Should Existing connectors Consist of Welded Studs, Replace in Kind at the same Pitch. Spacing of Studs to be Determined by Substituting Two-7/8" ϕ x 6" Long Studs for One Pitch. Maximum Spacing of Studs 24"

SLAB POURING SEQUENCE LEGEND & NOTES

(4) Slab Section and Pouring Sequence

→ Direction of Pour

Slab shall be Poured Following the Numerical and Direction Sequence Shown for each Stage. The Concrete for the Bridge Slab shall not be Poured in any Numbered Sequence Sections until the concrete of the Previous Numbered Sequence Section has cured a Minimum of 5 Days. Placing of all Superimposed Dead Loads shall be in the same Sequence as the Slab.

NOTE: Stage III Deck Poured In One Pour (With Prior Approval From District)

NO.	DATE	DESCRIPTION

REVISIONS

CONNECTICUT
DEPARTMENT OF TRANSPORTATION

DARIEN

OLD KINGS HIGHWAY NORTH OVER U.S. INTERSTATE 95

DECK SLAB

ENGINEER BOSWELL ENGINEERING

DESIGNER C.D. | DRAFTER C.L./K.T. | CHECKER L.T.

APPROVED GGB | DATE 12/92

STRUCTURE NO. | BRIDGE LOG NO. 00047 | STRUCTURE SHEET NO. 9 OF 13

35-173

466-02

17

F.H.W.A. REGION NO.	STATE	TOWN	FED. AID PROJ. NO.	PROJ. NO.	YEAR	ROUTE NO.	SHEET NO.	TOTAL SHEETS
1	CONN.	DARIEN	———	35-173	1992	I-95	18	40

THIS SHEET CORRECTED

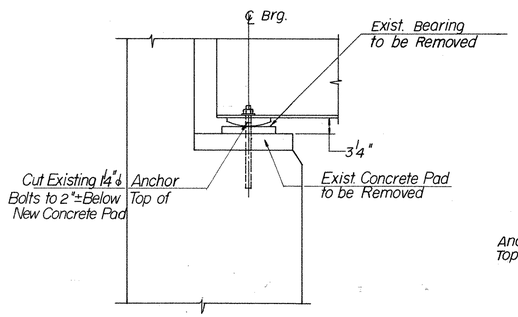

EXISTING EXPANSION BEARING
ABUTMENT EAST & WEST

SCALE : ¾" = 1'-0"

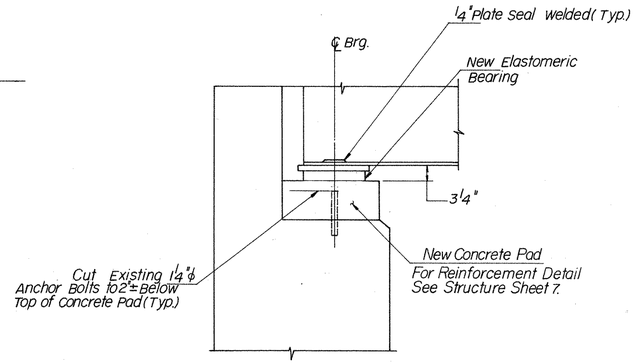

NEW EXPANSION BEARING
ABUTMENT EAST & WEST

SCALE : ¾" = 1'-0"

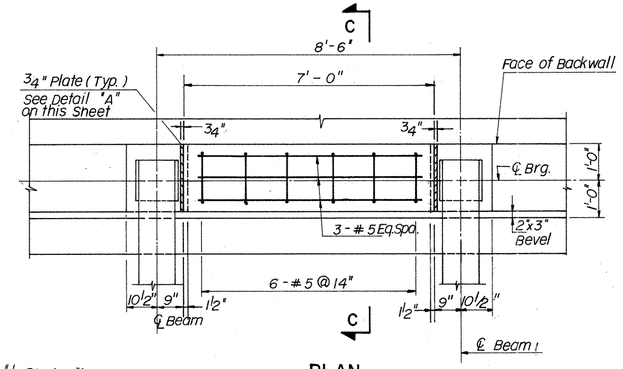

PLAN

SCALE : ½" = 1'-0"

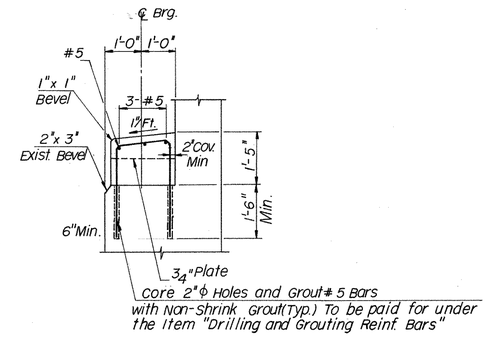

SECTION C-C

SCALE : ½" = 1'-0"

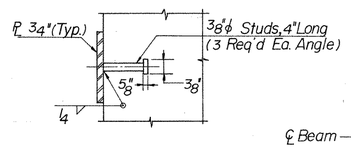

DETAIL "B"

N.T.S.

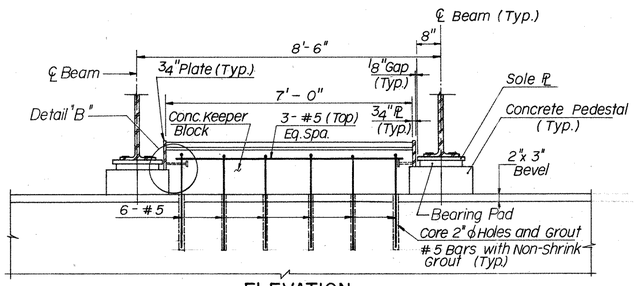

ELEVATION

SCALE : ½" = 1'-0"

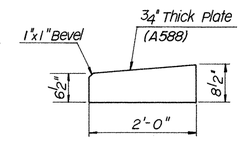

DETAIL "A"

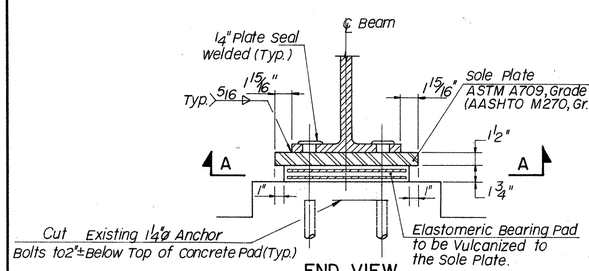

END VIEW

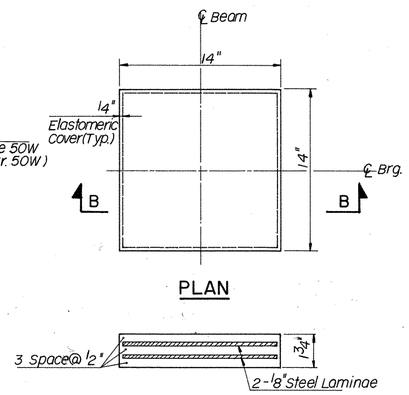

PLAN

SECTION B-B

ELASTOMERIC BEARING PAD DETAIL

N.T.S.

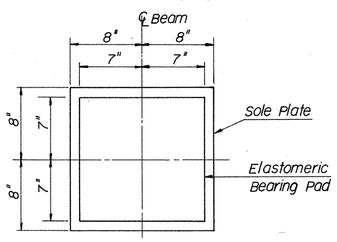

SECTION A-A

NEW EXPANSION BEARING

SCALE : 1½" = 1'-0"

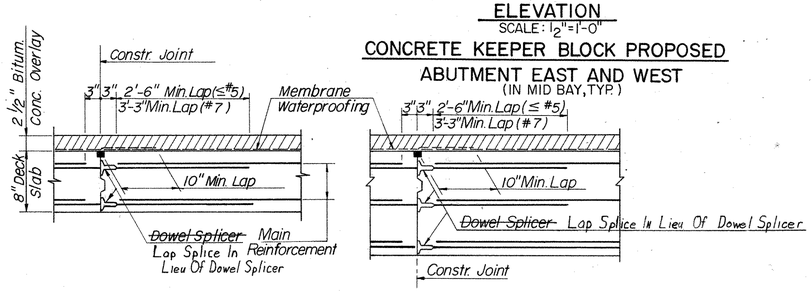

AT MIDSPAN — AT END HAUNCH

LONGITUDINAL CONSTRUCTION JOINT DETAILS

N.T.S.

REPLACEMENT OF BRIDGE BEARINGS.

1. FOR CONSTRUCTION SEQUENCE OF BEARING REPLACEMENT AND CRITERIA OF NEW BEARING ASSEMBLY MATERIALS, SEE ITEM "BEARING REPLACEMENT WITH ELASTOMERIC BEARING PADS" IN SPECIAL PROVISIONS.
2. MIN. CAPACITY OF NEW ABUT. BEARING SHALL BE 85K (DEAD LOAD = 35K., LIVE LOAD 50 K.)
3. SOLE PLATES INCLUDED IN "BEARING REPLACEMENT WITH ELASTOMERIC BEARING PADS" FOR PAYMENT.
4. FOR PIER (FIXED) BEARING SEE STRUCTURE SHEET 7

JACKING NOTES

1. THE EXISTING CONCRETE DECK SHALL BE REMOVED AND APPROPRIATE DIAPHRAGMS DISCONNECTED PRIOR TO THE GIRDERS BEING RAISED.
2. ALL JACKS SHALL BE CONTROLLED BY ONE COMMON MANIFOLD.
3. THE MAGNITUDE OF THE ANTICIPATED JACKING FORCE FOR EACH GIRDER (8 KIPS) IS 4 TONS. THIS VALUE INCLUDES ONLY THE STEEL FRAMING DEAD LOAD.
4. THE CONTRACTOR SHALL SUBMIT A DETAILED SCHEME FOR JACKING OF THE GIRDERS TO THE ENGINEER FOR APPROVAL PRIOR TO THE START OF THE WORK. THE SUBMITTAL SHALL INCLUDE BUT NOT LIMITED TO THE FOLLOWING:
   a. WORKING DRAWINGS PREPARED, STAMPED AND SIGNED BY A CONNECTICUT STATE LICENSED PROFESSIONAL ENGINEER.
   b. LIFT POINT LOCATIONS
   c. DETAILS FOR ALL LIFTING AND SUPPORTING SYSTEMS.
   d. TYPE AND GRADE OF ALL MATERIALS.
5. THE REPLACEMENT OF THE FIXED AND EXPANSION BEARINGS WITH ELASTOMERIC BEARINGS AND THE RECONNECTION OF DIAPHRAGMS SHALL FOLLOW THE PROCEDURES OUTLINED IN THE SUGGESTED SEQUENCE OF CONSTRUCTION NOTES.
6. ALL WORK IS TO BE DONE IN ACCORDANCE WITH THE SPECIAL PROVISIONS, "MAINTENANCE AND PROTECTION OF TRAFFIC" AND "PROSECUTION AND PROGRESS".

THE INFORMATION, INCLUDING ESTIMATED QUANTITIES OF WORK SHOWN ON THESE SHEETS IS BASED ON LIMITED INVESTIGATIONS BY THE STATE AND IS IN NO WAY WARRANTED TO INDICATE THE TRUE CONDITIONS OR ACTUAL QUANTITIES OR DISTRIBUTION OF QUANTITIES OF WORK WHICH WILL BE REQUIRED.

NO.	DATE	DESCRIPTION

REVISIONS

STATE OF CONNECTICUT
DEPARTMENT OF TRANSPORTATION

DARIEN

OLD KINGS HIGHWAY NORTH
OVER
U.S. INTERSTATE 95

BEARING AND KEEPER BLOCK DETAILS

ENGINEER BOSWELL ENGINEERING
DESIGNER CD. | DRAFTER C.L./K.T. | CHECKER L.T.
APPROVED GGB. | DATE 12/92
STRUCTURE NO. | BRIDGE LOG NO. 00047 | STRUCTURE SHEET NO. 10 OF 13

35-173

466-02

18

STATE OF CONNECTICUT - DEPT. OF TRANSPORTATION

FORM NO. ENG. 15B ED 3-86

F.H.W.A. REGION NO.	STATE	TOWN	FED. AID PROJ. NO.	PROJ. NO.	YEAR	ROUTE NO.	SHEET NO.	TOTAL SHEETS
1	CONN.	DARIEN	—	35 - 173	1992	I-95	19	40

THIS SHEET NOT CORRECTED

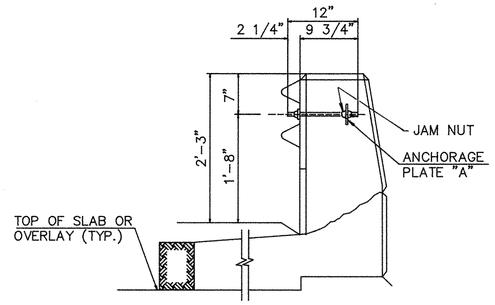

END ELEVATION
SCALE 1" = 1'-0"

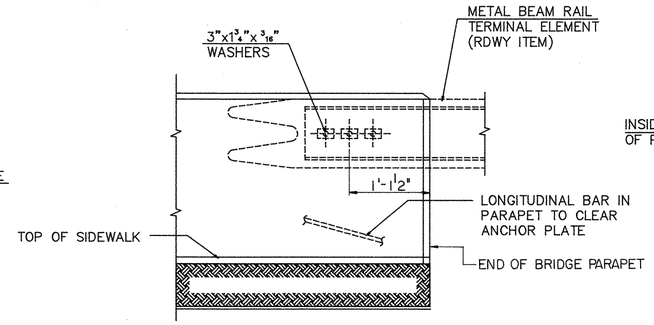

ELEVATION
SCALE 1" = 1'-0"

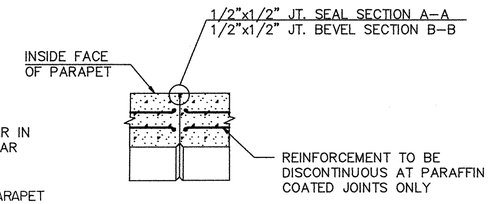

SECT. A-A & B-B

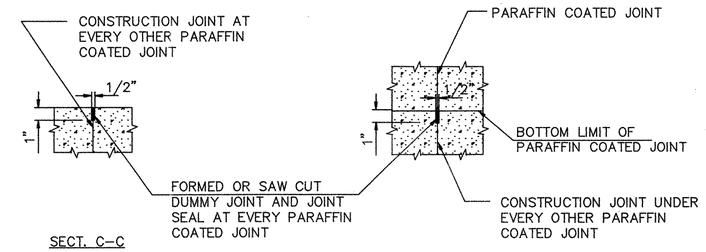

SECT. C-C

SECT. D-D

PARAFFIN COATED JOINT DETAILS
N.T.S.

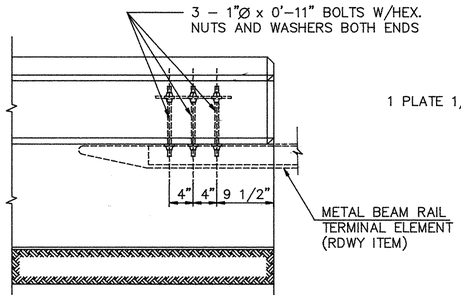

PLAN
SCALE 1" = 1'-0"

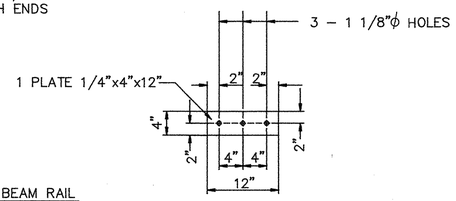

ANCHORAGE PLATE "A"
SCALE 1" = 1'-0"

TYPICAL METAL BEAM RAIL ANCHORAGE DETAIL (TYPE R-B)

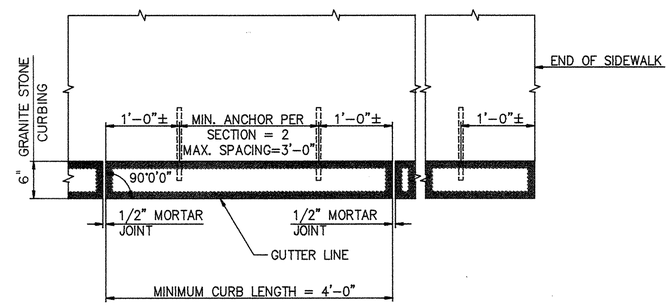

PLAN
SCALE 1" = 1'-0"

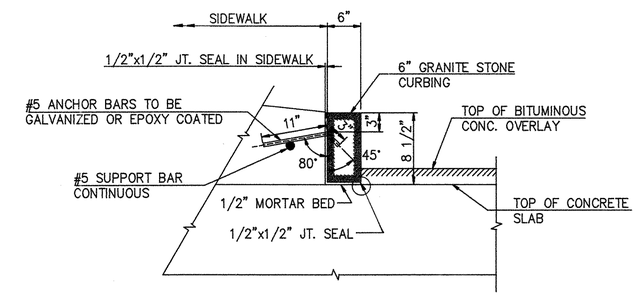

ELEVATION
SCALE 1" = 1'-0"

6" GRANITE STONE CURBING

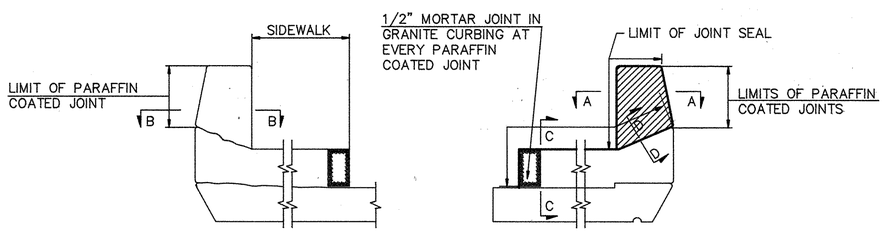

POSITIVE MOMENT AREA

NEGATIVE MOMENT AREA

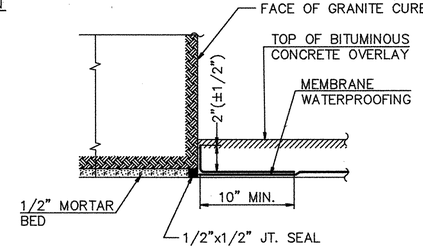

TREATMENT OF MEMBRANE WATERPROOFING AT GUTTER
N.T.S.

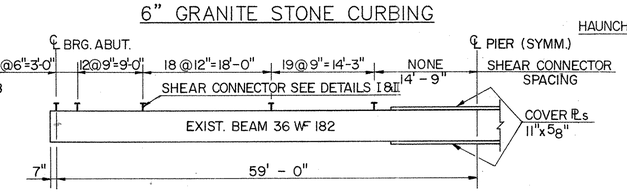

BEAM ELEVATION
N.T.S.

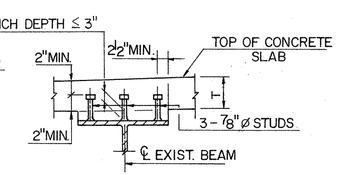

SHEAR CONNECTOR DETAIL I
(WHERE HAUNCH DEPTH ≤ 3" WITHOUT HAUNCH REINFORCEMENT)
N.T.S.

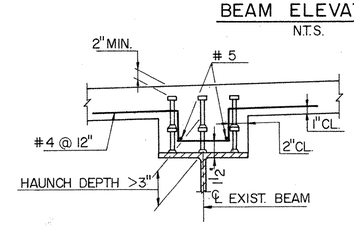

SHEAR CONNECTOR DETAIL II
(WHERE HAUNCH DEPTH>3" WITH HAUNCH REINF.)
N.T.S.

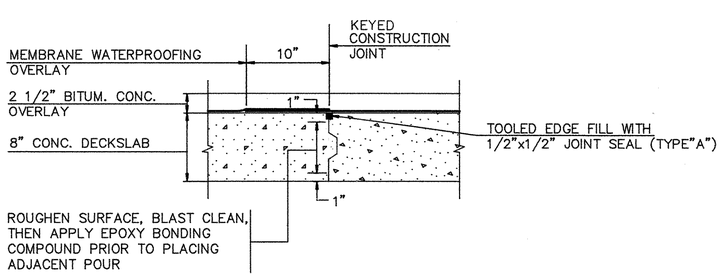

TREATMENT OF CONSTRUCTION DECK JOINT
N.T.S.

NO.	DATE	DESCRIPTION

REVISIONS

CONNECTICUT
DEPARTMENT OF TRANSPORTATION

DARIEN

OLD KINGS HIGHWAY NORTH OVER U.S. INTERSTATE 95

SUPERSTRUCTURE DETAILS

ENGINEER BOSWELL ENGINEERING
DESIGNER LN | DRAFTER NK | CHECKER LT
APPROVED GGB. | DATE 12/92
STRUCTURE NO. | BRIDGE LOG NO. 00047 | STRUCTURE SHEET NO. 11 OF 13

35-173

466-02

19

F.H.W.A. REGION NO.	STATE	TOWN	FED. AID PROJ. NO.	PROJ. NO.	YEAR	ROUTE NO.	SHEET NO.	TOTAL SHEETS
1	CONN.	DARIEN	—	35-173	1992	I-95	20	40

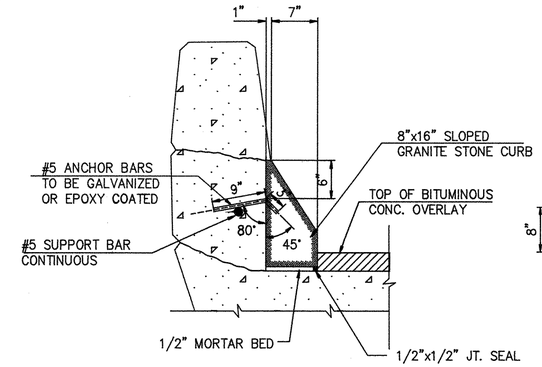

SECTION

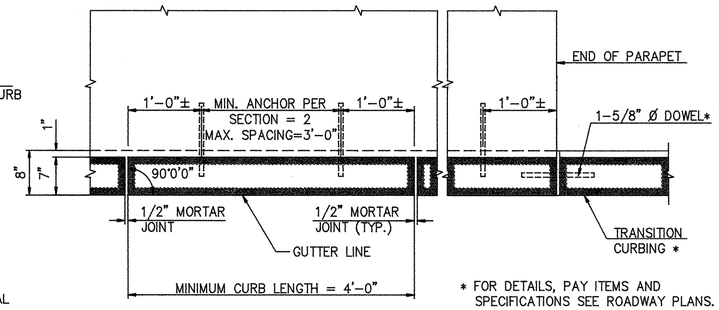

PLAN

* FOR DETAILS, PAY ITEMS AND SPECIFICATIONS SEE ROADWAY PLANS.

SLOPED GRANITE STONE CURB DETAILS

N.T.S.

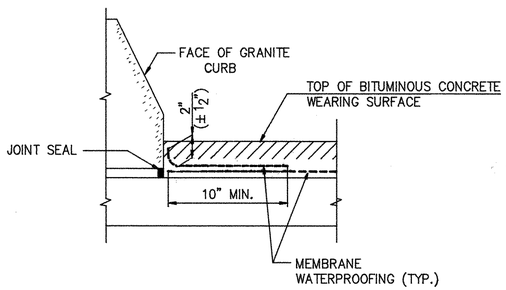

TREATMENT OF MEMBRANE WATERPROOFING AT GUTTER

N.T.S.

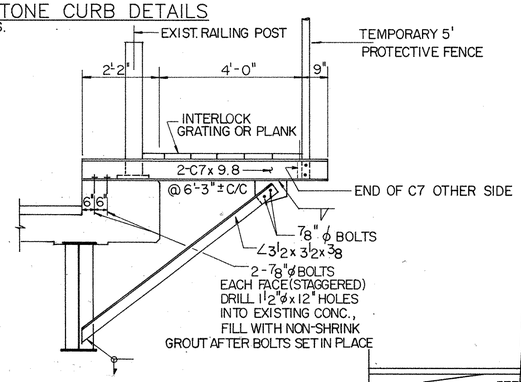

SUGGESTED TEMPORARY WALKWAY DETAIL

N.T.S.

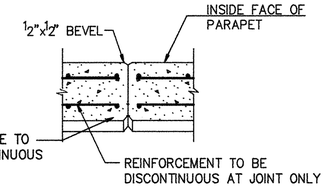

PLAN

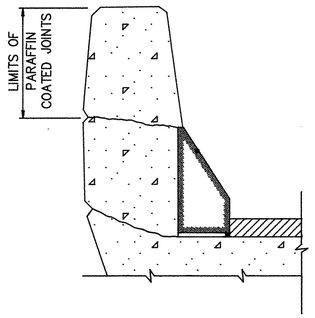

SECTION

PARAFFIN COATED JOINT DETAILS

NOT TO SCALE

THIS SHEET NOT CORRECTED

GRANITE STONE CURB TOLERANCES

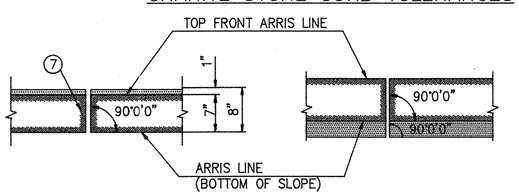

PLAN ELEVATION

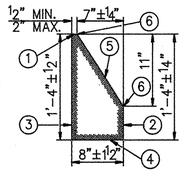

SECTION

TOLERANCE NOTES

1. Sawed surface approximating a true plane with no projections or depressions greater than 1/4".
2. Smooth, quarry split surface, free of all drill holes with projections or depressions not over 1/2".
3. Split surface shall be free of any projections over 1".
4. Sawed or split surface approximating a true plane to the specified dimensions with projection no greater than 1/4".
5. Sawed surface free of all quarry sawing and cutting marks with allowable depression or projection not over 1/4".
6. These arris lines shall be straight and true within a tolerance of ±1/4".
7. Ends of stones at intermediate joints shall be held full for 2" from all exposed surfaces with a permitted variation of 1/4". Beyond this area, the joint may fall away a maximun of 3".

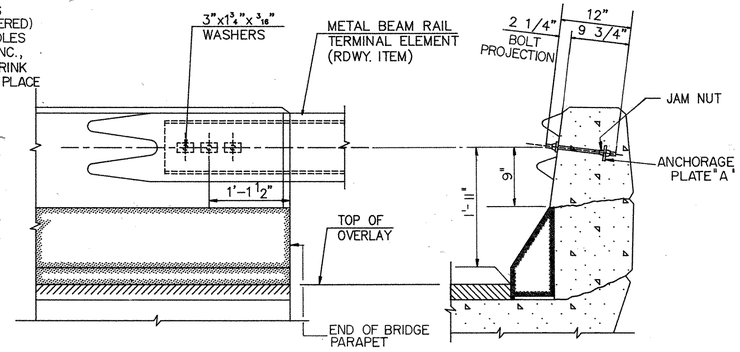

ELEVATION
SCALE 1" = 1'-0"

END ELEVATION
SCALE 1" = 1'-0"

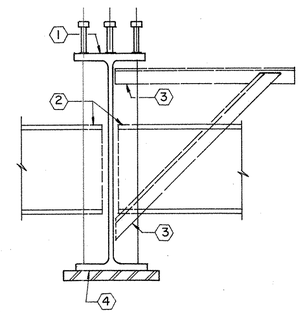

SPOT PAINTING OF STRUCTURE

(SCHEMATIC SKETCH)

N.T.S.

NOTES FOR METAL BEAM RAIL ANCHORAGE

1. Anchor bolts shall conform to the requirements of ASTM A449 with nuts and washers conforming to A563 Grade B.
2. Anchor bolts, nuts and washers shall be galvanized in conformance with the requirements of ASTM A153.
3. Anchorage plate shall conform to the requirements of ASTM A36.
4. All anchorage material will be paid for at the contract unit price per pound for "Deformed Steel Bars".

NOTES FOR SPOT PAINTING OF STRUCTURE

All areas disturbed by work or any other area as directed by the engineer shall be cleaned and primed in the field. Only exposed surface areas shall be painted with the top coat paint. See General Notes on Structure Sheet 2 for paint color.

1. Disturbed area due to removal of existing deck and welding shear connectors.
2. Disturbed area due to disconnecting and reconnecting the existing diaphragms.
3. Disturbed area due to installing temporary support
4. Disturbed area due to removal of existing bearing and welding new sole plate. See Special Provisions.

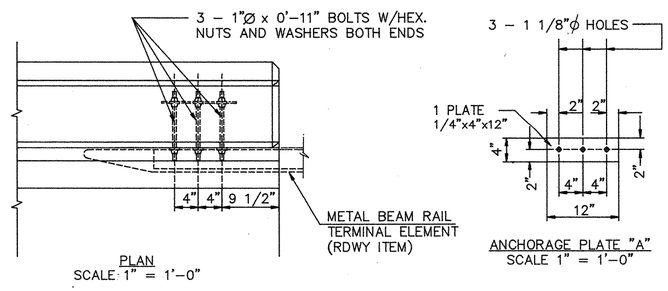

PLAN
SCALE 1" = 1'-0"

ANCHORAGE PLATE "A"
SCALE 1" = 1'-0"

METAL BEAM RAIL (TYPE R-B) ANCHORAGE DETAILS

NO.	DATE	DESCRIPTION

REVISIONS

CONNECTICUT
DEPARTMENT OF TRANSPORTATION

DARIEN

OLD KINGS HIGHWAY NORTH
OVER
U.S. INTERSTATE 95

MISCELLANEOUS DETAILS

ENGINEER BOSWELL ENGINEERING			
DESIGNER LN	DRAFTER NK	CHECKER LT	
APPROVED GGB.		DATE 12/92	
STRUCTURE NO.		BRIDGE LOG NO. 00047	STRUCTURE SHEET NO. 12 OF 13

35-173

466-02

20

F.H.W.A. REGION	STATE	TOWN	FED. AID PROJ. NO.	PROJ. NO.	YEAR	ROUTE NO.	SHEET NO.	TOTAL SHEETS
1	CONN.	DARIEN	—	35-173	1992	I-95	21	40

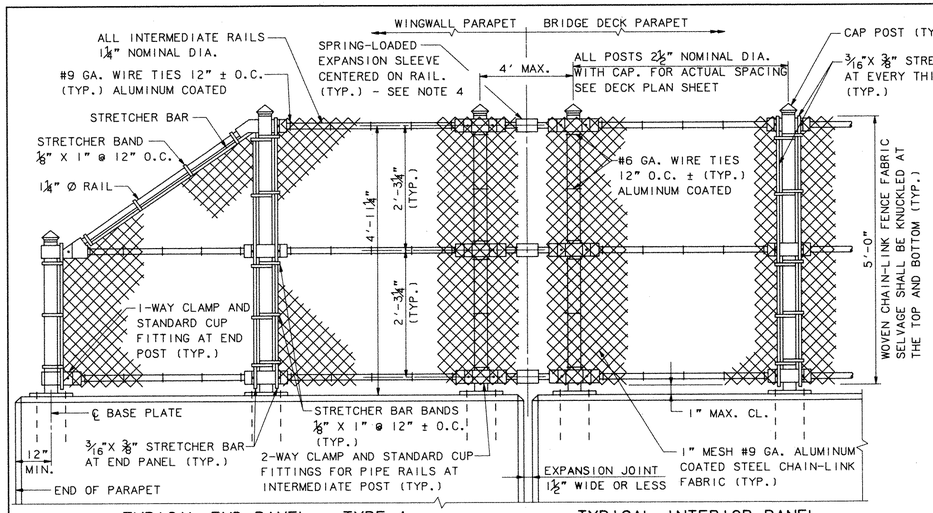

TYPICAL END PANEL - TYPE A
NOT TO SCALE

TYPICAL INTERIOR PANEL
NOT TO SCALE

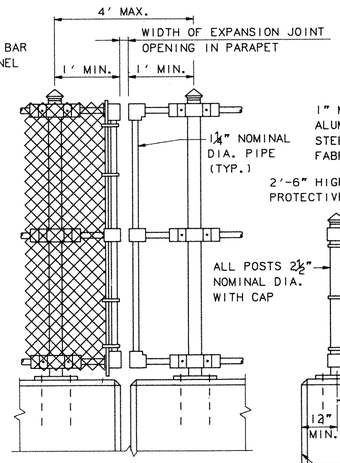

EXPANSION JOINT
GREATER THAN 1½" WIDE
NOT TO SCALE

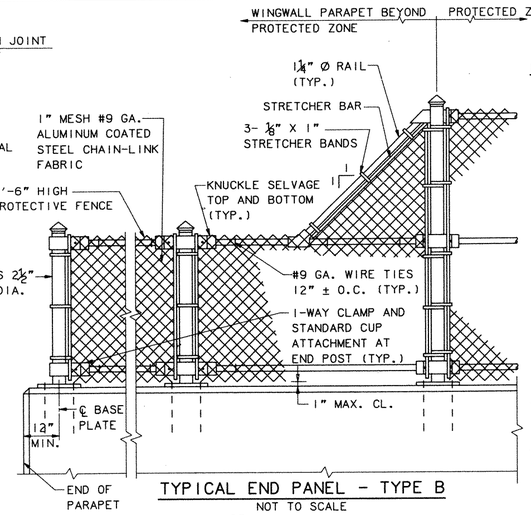

TYPICAL END PANEL - TYPE B
NOT TO SCALE

NOTES

THIS SHEET NOT CORRECTED

MATERIALS:

THE BASE METAL OF THE CHAIN-LINK FENCE FABRIC, POSTS, RAILS, TIES, BARS, BANDS AND ALL OTHER APPURTENANCES SHALL BE OF A GOOD COMMERCIAL QUALITY OF GALVAVIZED OR ALUMINUM COATED STEEL, AND SHALL CONFORM TO THE REQUIREMENTS OF AASHTO DESIGNATION M181 OR AS INDICATED HEREIN AND IN SPECIAL PROVISIONS.

CHAIN-LINK FENCE FABRIC SHALL BE NO. 9 GAGE, ALUMINUM COATED, 1 INCH MESH SIZE, DIAMOND SHAPED.

WIRE TIES SHALL BE STANDARD NO. 9 GAGE FOR RAILS AND NO. 6 GAGE FOR POSTS, ALUMINUM COATED AND SHALL CONFORM TO THE REQUIREMENTS OF ASTM A112.

ALL POSTS AND RAILS SHALL BE STANDARD PIPE OF NOMINAL DIAMETER SIZES 2½" AND 1¼", RESPECTIVELY AND SHALL CONFORM TO ASTM SPECIFICATION A53.

BASE AND ANCHORAGE PLATES SHALL CONFORM TO ASTM A36 GALVANIZED STEEL.

ANCHOR BOLTS SHALL BE STAINLESS STEEL CONFORMING TO ASTM A193/A193M. THE PRE-SET ANCHORAGE SYSTEM SHALL BE ASTM A108 GRADE 12L14 FOR THE FERRULE MATERIAL AND ASTM A510 GRADE 1034 FOR THE STRUTS.

LIVE LOAD:

PEDESTRIAN RAILILNG LOADS, AASHTO 2.7.3.

CONSTRUCTION:

1. ALL POSTS, RAILS AND FENCING ARE TO BE FABRICATED AND ERECTED SO THAT THE RAILS ARE PARALLEL AND THE POSTS ARE TRULY VERTICAL.
2. FOR STRUCTURES ON CURVATURES OF 3° OR LESS THE RAILS MAY BE SPRUNG INTO PLACE. STRUCTURES EXCEEDING 3° IN CURVATURE SHALL HAVE CURVED RAILS.
3. ALL PROTECTIVE FENCE MATERIALS EXCEPT FABRIC, SHALL BE HOT-DIP GALVANIZED. SEE SPECIAL PROVISIONS.
4. RAIL EXPANSION SLEEVES SHALL BE PROVIDED AT EVERY EXPANSION JOINT IN PARAPET. WHERE JOINT MOVEMENTS ARE LESS THAN ¼", EXPANSION SLEEVES MAY BE OMITTED AND THE STANDARD CUP AND RAIL FITTING, OR APPROVED EQUAL, MAY BE SUBSTITUTED.
5. EXPOSED SURFACES OF ASSEMBLED PROTECTIVE FENCE MATERIALS SHALL BE FREE OF BURRS AND SHARP EDGES AND SHALL BE OF ONE COLOR IN APPEARANCE.
6. EITHER TYPE A OR TYPE B END PANEL SHALL BE USED AS SHOWN ON THE PLANS. FOR EXTREMELY LONG APPROACH PARAPETS BEYOND THE PROTECTED ZONE, TYPE B END PANELS SHALL BE EXTENDED AS SHOWN.
7. THE COST OF FURNISHING AND INSTALLING THE PRESET ANCHORAGE SYSTEM INCLUDING SHIMS AND BASE PLATES SHALL BE INCLUDED IN THE PAYMENT ITEM "PROTECTIVE FENCE (5' HIGH)" OR "PROTECTIVE FENCE (7' HIGH) (CURVED)", AS APPROPRIATE.
8. THE CURVED 7 FT. HIGH PROTECTIVE FENCE SHALL ONLY BE USED ON THE SIDE OF A BRIDGE WHERE THERE IS A SIDEWALK. WHERE THE SIDEWALK PARAPET EXTENDS BEYOND THE AREA OF HIGHWAY, RAILROAD OR CONCERNED FACILITY BELOW BY TWO OR MORE PANELS, THE HEIGHT OF THE PROTECTIVE FENCE SHALL DROP TO THE STRAIGHT 5 FT. HEIGHT OR 2 FT. 6 INCHS HEIGHT, AS SHOWN ON THE GENERAL PLAN.
9. ALL MEASUREMENTS SHALL BE FIELD VERIFIED BEFORE FABRICATION OF THE PROTECTIVE FENCE SYSTEM TO ENSURE PROPER FIT AND ALIGNMENT.
10. FOR FENCE POST SPACINGS, SEE DECK PLAN DETAIL SHEET.

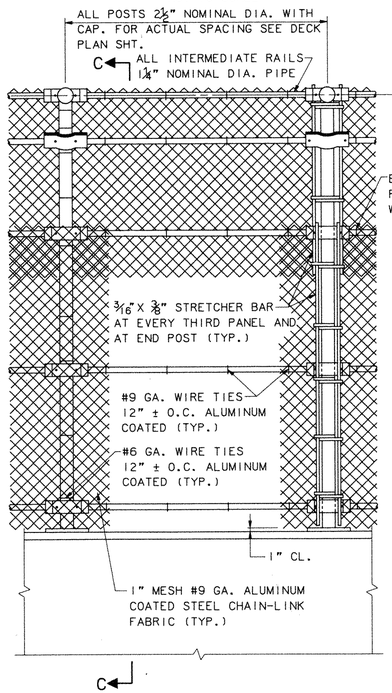

TYPICAL SIDEWALK PANEL
NOT TO SCALE

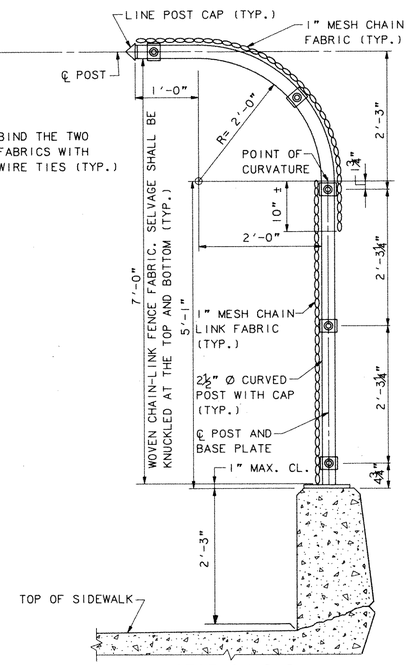

SECTION C-C
NOT TO SCALE

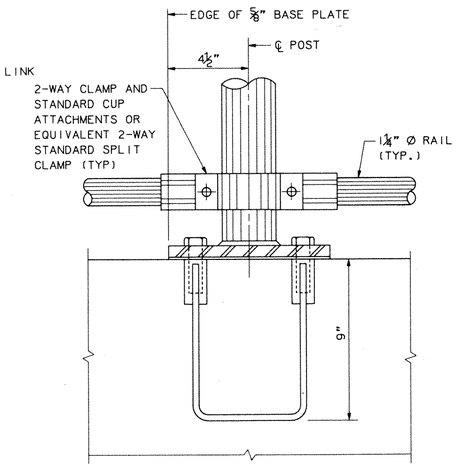

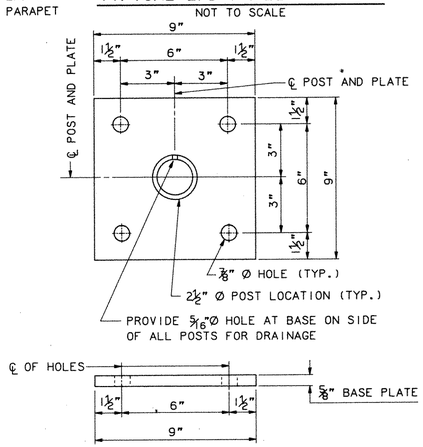

BASE PLATE DETAIL
SCALE: 3" = 1'-0"

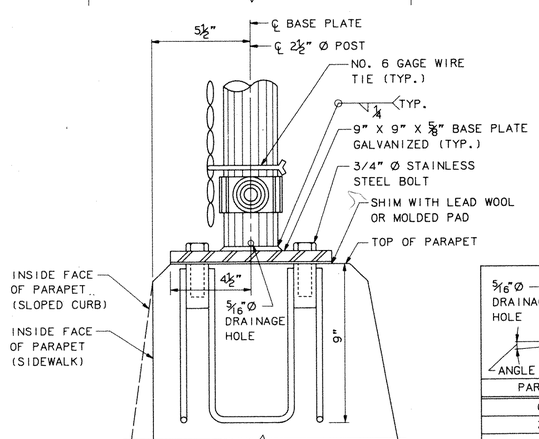

POST PRESET ANCHORAGE DETAILS
SCALE: 3" = 1'-0"

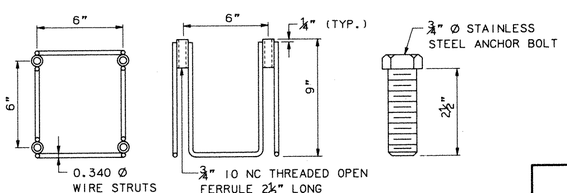

PRESET ANCHORAGE SYSTEM
NOT TO SCALE

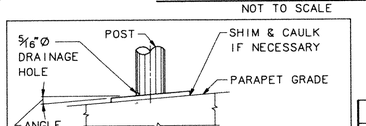

PARAPET GRADE	ANGLE
0% TO 2%	0°
2% TO 4%	1°-43'
4% TO 6%	2°-52'
6% TO 8%	4°-0'
8% TO 10%	5°-09'
10% TO 12%	6°-17'

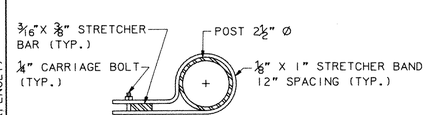

STRETCHER BAND POST CONNECTION
NOT TO SCALE

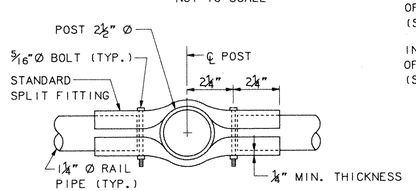

EQUIVALENT POST CONNECTION CLAMP
NOT TO SCALE

NO.	DATE	DESCRIPTION

REVISIONS

CONNECTICUT
DEPARTMENT OF TRANSPORTATION

DARIEN

OLD KINGS HIGHWAY NORTH
OVER
U.S. INTERSTATE 95

BRIDGE PROTECTIVE FENCE DETAILS
(OVER NON-ELECTRIFIED RAILROADS)

ENGINEER BOSWELL ENGINEERING		
DESIGNER CD.	DRAFTER	CHECKER LT.
APPROVED GGB.		DATE 12/92
STRUCTURE NO.	BRIDGE LOG NO. 00047	STRUCTURE SHEET NO. 13 of 13

FENCE (FENCE1)

35-123

466-02

21

F.H.W.A. REGION	STATE	TOWN	FED. AID PROJ. NO.	PROJ. NO.	YEAR	ROUTE NO.	SHEET NO.	TOTAL SHEETS
1	CONN.	DARIEN		35-173	1992	I-95	22	40

MAINTENANCE AND PROTECTION OF TRAFFIC

THIS SHEET NOT CORRECTED

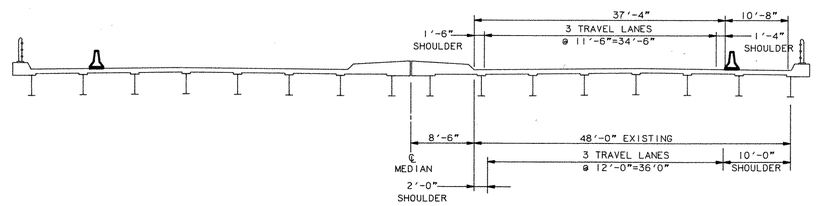

SECTION

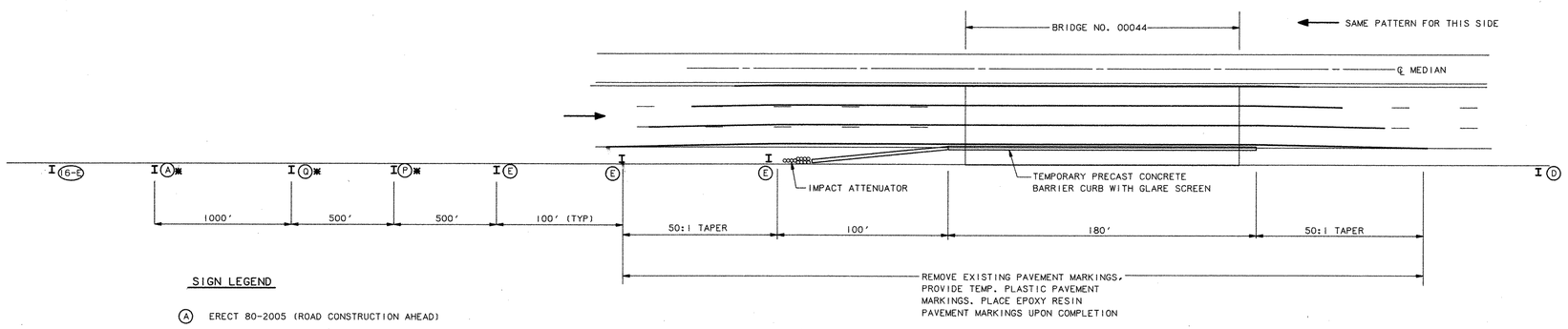

PLAN

SIGN LEGEND

(A) ERECT 80-2005 (ROAD CONSTRUCTION AHEAD)

(D) ERECT 80-1404 (END CONSTRUCTION)

(E) ERECT 80-1409 (◄)

(P) ERECT 80-2009 (SHOULDER CLOSED)

(Q) ERECT 80-2009 (SHOULDER CLOSED)
WITH 80-6102(A) (AHEAD)

NOTES:

1. THE 16-E SIGN SHALL BE LOCATED IN ADVANCE OF THE NEAREST EXIT RAMP AND ON ENTRANCE RAMPS PRIOR TO THE WORK AREA
2. SIGNS (A) & (D) MAY BE OMITTED WHEN SUCH SIGNS ARE INSTALLED TO DESIGNATE A LARGER WORK AREA AT THE DIRECTION OF THE ENGINEER.
3. * BARRICADE WARNING LIGHT - HIGH INTENSITY.
4. THIS PLAN IS APPLICABLE FOR EACH DIRECTION OF TRAVEL.
5. SEE SPECIAL PROVISIONS FOR TEMPORARY LANE CLOSURE RESTRICTIONS.

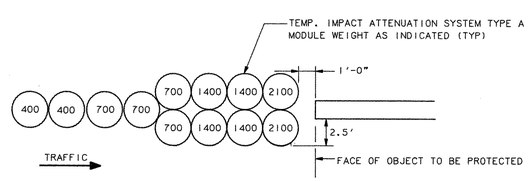

TEMPORARY IMPACT ATTENUATION SYSTEM TYPE A

N.T.S.

REVISIONS			
NO.	DATE	DESCRIPTION	REV. SHEET NO.

35-173

466-02

22

F.H.W.A. REGION NO.	STATE	TOWN	FED. AID PROJ. NO.	PROJ. NO.
1	CONN.	DARIEN/NORWALK	IM-95-1(101)10	35-176

TYPICAL CROSS SECTIONS

NOT TO SCALE

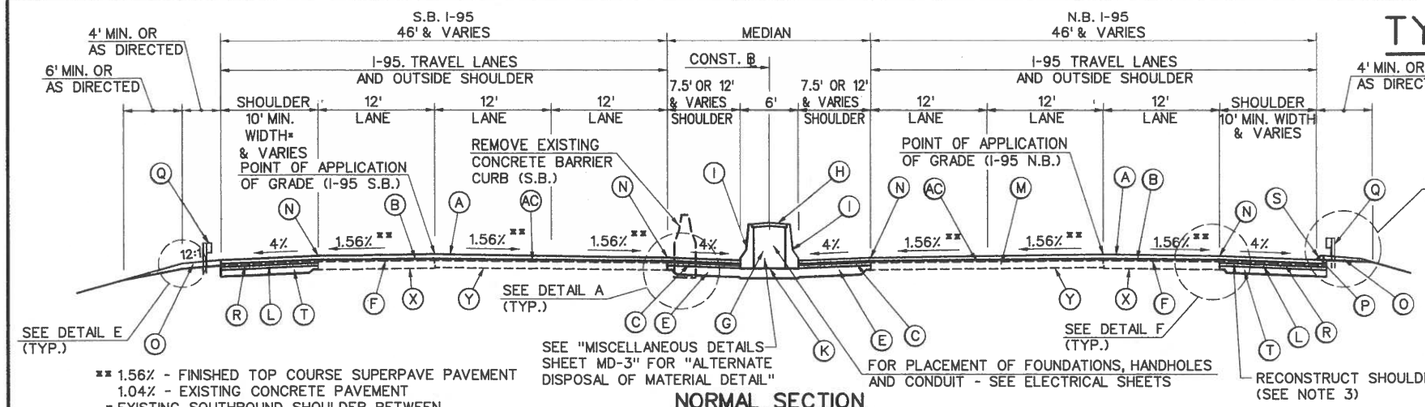

** 1.56% - FINISHED TOP COURSE SUPERPAVE PAVEMENT
1.04% - EXISTING CONCRETE PAVEMENT
* EXISTING SOUTHBOUND SHOULDER BETWEEN STA. 89+00 TO 121+00 SHALL BE RECONSTRUCTED TO A 12' WIDTH. SEE "INITIAL SHOULDER RECONSTRUCTION" DETAIL FOR PAVEMENT STRUCTURE.

NORMAL SECTION

MILLING OF BITUMINOUS CONCRETE (FULL DEPTH)
PAVEMENT RESURFACING (MAINLINE)
DARIEN: STA. 52+29.40 TO 198+53.74
NORWALK: STA. 10+00 TO 119+00

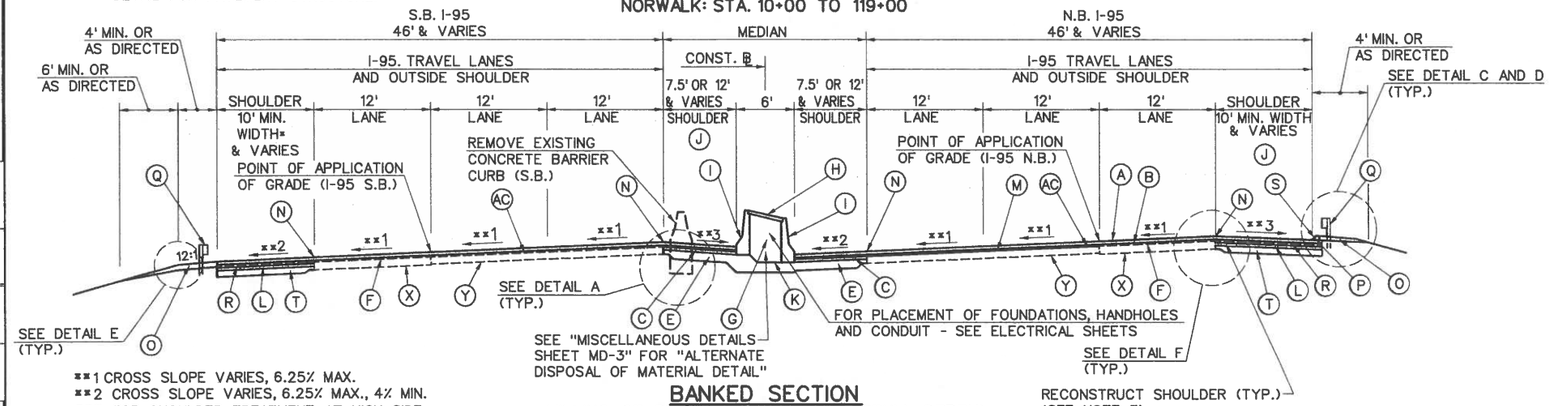

**1 CROSS SLOPE VARIES, 6.25% MAX.
**2 CROSS SLOPE VARIES, 6.25% MAX., 4% MIN.
**3 FOR SHOULDER TREATMENT AT HIGH SIDE OF BANK, SEE DETAIL B THIS SHEET
* EXISTING SOUTHBOUND SHOULDER BETWEEN STA. 89+00 TO 121+00 SHALL BE RECONSTRUCTED TO A 12' WIDTH. SEE "INITIAL SHOULDER RECONSTRUCTION" DETAIL FOR PAVEMENT STRUCTURE.

BANKED SECTION

MILLING OF BITUMINOUS CONCRETE (FULL DEPTH)
PAVEMENT RESURFACING (MAINLINE)
DARIEN: STA. 52+29.40 TO 198+53.74
NORWALK: STA. 10+00 TO 119+00

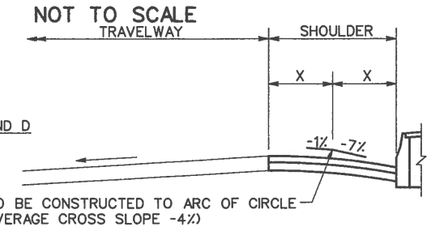

DETAIL B

MEDIAN SHOULDER TREATMENT
HIGH SIDE OF BANK

SHOULDER TREATMENT HIGH SIDE OF BANK				
SHOULDER WIDTH	X	DROP IN X (@ 1%)	DROP IN X (@ 7%)	TOTAL DROP
3'	1.5'	0.02'	0.11'	0.13'
7.5'	3.75'	0.04'	0.27'	0.31'
10'	5'	0.05'	0.35'	0.40'
12'	6'	0.06'	0.42'	0.48'

LEGEND

- (A) 5" (MIN.) SUPERPAVE 0.50 INCH (PLACED IN TOP COURSE SHALL BE 2")
- (B) 1" SUPERPAVE 0.375 INCH
- (C) 4" SUPERPAVE 0.5 INCH
- (D) 6" PROCESSED AGGREGATE SUBBASE
- (E) 12" SUBBASE
- (F) MATERIAL FOR TACK COAT
- (G) BEDDING MATERIAL
- (H) 4" CAST IN PLACE CONCRETE
- (I) PRECAST CONCRETE BARRIER CURB (16⅜"x45
- (J) SEE DETAIL SHOULDER TREATMENT HIGH SIDE
- (K) SEE DETAIL 'PLACEMENT OF PRECAST CONCR AT DIFFERENTIAL GUTTER ELEVATIONS' ON SH
- (L) 4" SUPERPAVE 1.5 INCH
- (M) REPAIR EXISTING PAVEMENT (AS DIRECTED B
- (N) CUT BITUMINOUS CONCRETE PAVEMENT (SEE
- (O) PROCESSED AGGREGATE
- (P) BITUMINOUS CONCRETE PARK CURBING (4" HE
- (Q) GUIDE RAILING (RESET OR NEW AS INDICATED
- (R) 2" SUPERPAVE 0.5 INCH
- (S) EXISTING CURBING (B.C.L.C.) TO BE REPLACE
- (T) 8" PROCESSED AGGREGATE SUBBASE
- (W) BITUMINOUS CONCRETE FOR PATCHING (AS REQUIRED BY ENGINEER).
- (X) EXISTING 10" REINFORCED CONCRETE PAVEME
- (Y) EXISTING 9" REINFORCED CONCRETE PAVEME
- (Z) EXISTING BITUMINOUS CONCRETE PAVEMENT
- (ZZ) EXISTING PAVEMENT
- (AA) 2" SUPERPAVE 0.50 INCH
- (AB) 4" SUPERPAVE 0.50 INCH
- (AC) MILLING OF BITUMINOUS CONCRETE (FULL DE
- (AD) MILLING OF BITUMINOUS CONCRETE (DEPTH AS
- (AE) 6" SUBBASE
- (AF) 3" SUPERPAVE 0.5 INCH (PLACE IN TWO EQU

NOTE: FOR FURTHER INFORMATION SEE MISCELLA DETAIL SHEET FOR PRECAST CONCRETE B CURB 16⅜"x45"

RECONSTRUCTION OF AND RESURFACING OF

GENERAL NOTES

1. MILL/REMOVE EXISTING BITUMINOUS CONCRETE MATERIAL TO UNDERLYING CONCRETE PAVEMENT ON MAINLINE HIGHWAY AND RAMPS WHERE INDICATED ON CROSS SECTIONS AND MISCELLANEOUS DETAILS.
2. LOCATIONS OF FULL DEPTH CONCRETE PAVEMENT REPAIR SHALL BE DETERMINED IN THE FIELD BY BOTH THE ENGINEER AND THE DEPARTMENT'S OFFICE OF ENGINEERING PAVEMENT MANAGEMENT SECTION AFTER MILLING OPERATIONS.
3. THE OUTSIDE SHOULDERS SHALL BE RECONSTUCTED AS CALLED FOR ON THE ROADWAY SECTIONS PRIOR TO INITIATING MEDIAN RECONSTRUCTION.
4. MODIFY THE FIRST LIFT OF SUPERPAVE 0.50 INCH TO CREATE THE REQUIRED FINAL SURFACE CROSS SLOPE, THE USE OF AN ADDITIONAL LIFT (WEDGE COURSE) MAY BE REQUIRED.
5. ON CURVES WHERE THE SUPERELEVATION RATE IS BEING INCREASED OR CURVES BEING REBUILT, FILL OR WEDGE COURSES SHALL BE NECESSARY. THE SIZE OF SUPERPAVE MATERIAL PLACED IS DEPENDANT ON BOTH THE DEPTH TO BE FILLED AND PAVING OPERATIONS, BUT IN GENERAL, SHALL BE THE LARGEST AGGREGATE SUPERPAVE MATERIAL POSSIBLE. THE SUPERPAVE MATERIAL TYPES AND THEIR CORRESPONDING MINIMUM AND MAXIMUM THICKNESSES TO BE PLACED PER LIFT ARE AS FOLLOWS:

MATERIAL	THICKNESS RANGE
SUPERPAVE 0.50 INCH	1.5-2.5 INCHES PER LIFT
SUPERPAVE 0.375 INCH	1.0-2.0 INCHES PER LIFT
SUPERPAVE 1.50 INCH	2.5-4.0 INCHES PER LIFT

NOTE: THE SUPERPAVE 1.5 INCH MATERIAL SHALL NOT BE A WEARING SURFACE FOR ANY MAINLINE TRAFFIC. A LAYER OF SUPERPAVE 0.50 INCH OR SUPERPAVE 0.375 INCH MUST BE THE SURFACE LAYER FOR MAINLINE TRAFFIC AT THE END OF EACH WORK PERIOD.

6. PROVIDE A LEVELING COURSE OF SUPERPAVE MATERIAL AT SETTLED AREAS AS DIRECTED BY THE ENGINEER. THE SUPERPAVE MATERIAL SIZE IS DEPENDANT ON BOTH THE DEPTH OF SETTLEMENT TO BE FILLED AND PAVING OPERATIONS. FOR SUPERPAVE MATERIAL TYPES AND MINIMUM AND MAXIMUM THICKNESS PER LIFT, SEE GENERAL NOTE NO. 5. LEVELING COURSE SHALL BE PAID FOR BY INDIVIDUAL SUPERPAVE MATERIAL ITEM USED.
7. APPLY A TACK COAT ON SURFACES THAT HAVE BEEN IN PLACE LONGER THAN 5 DAYS, IMMEDIATELY PRIOR TO OVERLAY.
8. THE FINISHED GRADE ON TOP OF THE CONCRETE BARRIER CURB SHALL BE SET TO A SMOOTH LINE ADJACENT TO LOCALIZED DIPS IN THE TRAVELWAY PAVEMENT. WHERE A SMOOTH LINE CANNOT BE OBTAINED WITH THE PROPOSED CROSS SLOPES, THE SHOULDER CROSS SLOPE TANGENT SECTIONS MAY BE VARIED BY ± 2%. ON SUPERELEVATED SECTIONS, THE 7% PORTION OF THE CROSS SLOPE MAY BE VARIED BY ±2%.
9. FOR DETAILS C, D AND E, SEE SHEET TCS - 2/2.
10. THE CONTRACTOR WILL BE REQUIRED TO LOCATE THE EDGE OF CONCRETE PAVEMENT PRIOR TO SAW CUTTING FOR MEDIAN AND SHOULDER REMOVAL.

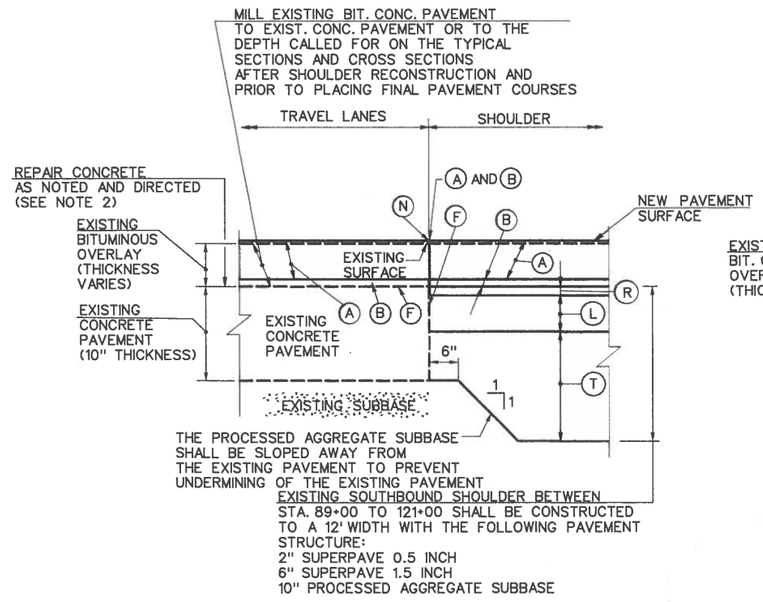

DETAIL F

OUTSIDE SHOULDER RECONSTRUCTION

N.T.S.

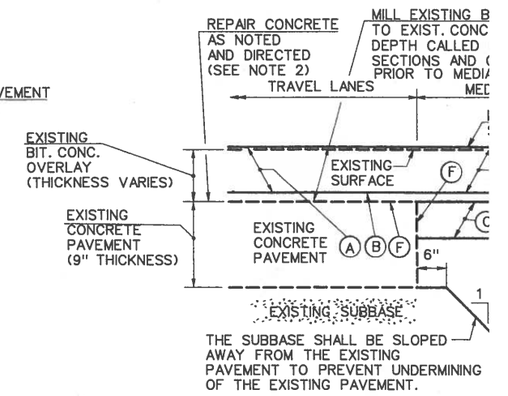

DETAIL A

MEDIAN RECONSTRUCTION

N.T.S.

THIS SHEET NOT CORRECTED

TYPICAL CRO

NO.	DATE
	- -
	- -
	- -
	- -
	- -
	- -

NOTEBOOK NO.		
	Plotted	10/21/99
	Traced	DKS
	Designed	10/21/99
	New Const. Noted	RGS
	Top. Field Chk. Noted	

TCS-1.DGN

TYPICAL CROSS SECTIONS

NOT TO SCALE

F.H.W.A. REGION NO.	STATE	TOWN	FED. AID PROJ. NO.	PROJ. NO.
1	CONN.	DARIEN/NORWALK	IM-95-1(101)10	35-176

RECONSTRUCTION OF
AND RESURFACING OF

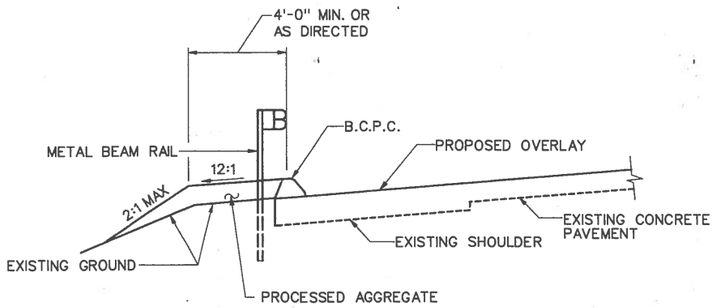

DETAIL C
EDGE ROAD TREATMENT WITH CURB WHERE RAILING IS REQUIRED

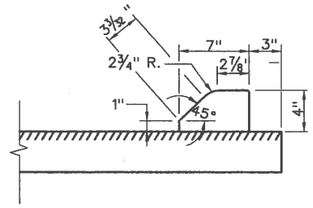

DETAIL D
BITUMINOUS CONCRETE PARK CURBING (4 INCH HEIGHT)

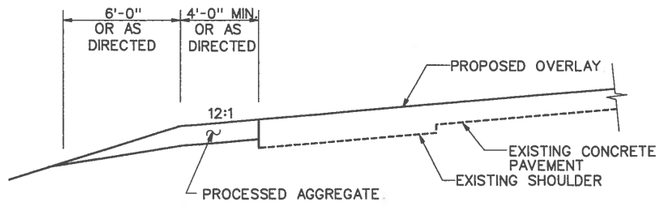

DETAIL E
EDGE OF ROAD TREATMENT

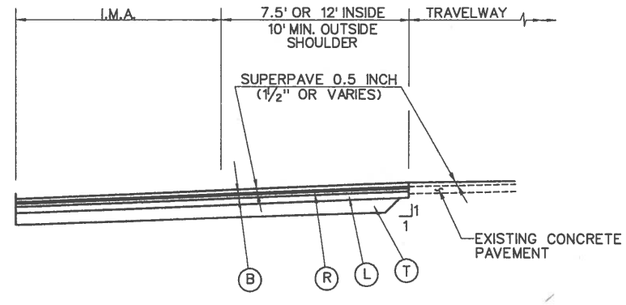

INITIAL TREATMENT OF SHOULDERS AND INCIDENT MANAGEMENT AREA
(AFTER PAVEMENT MILLING)

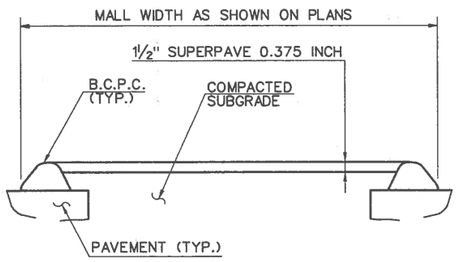

PAVED MALL

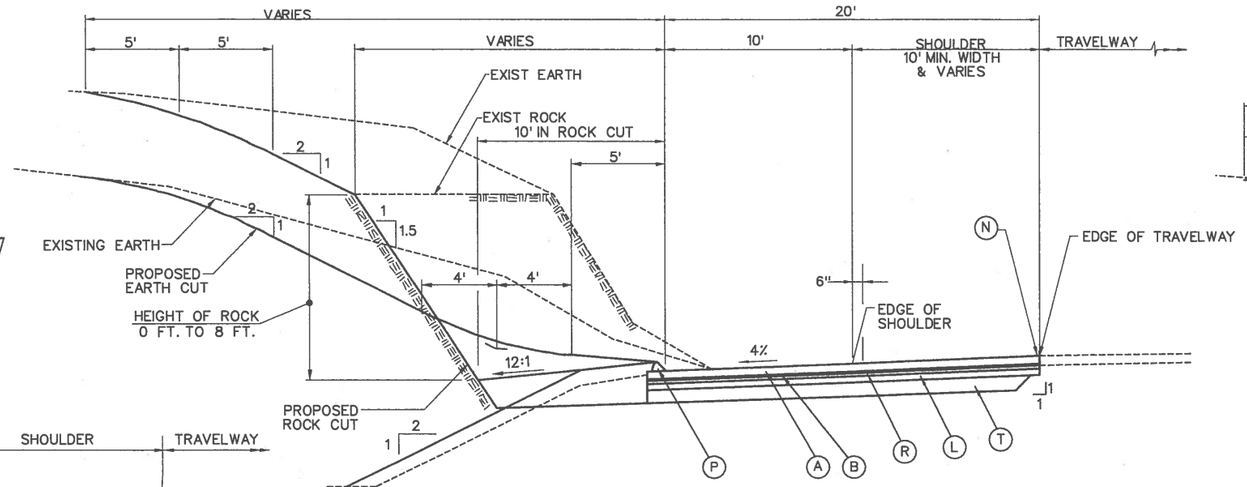

INCIDENT MANAGEMENT AREA
WITH CURB

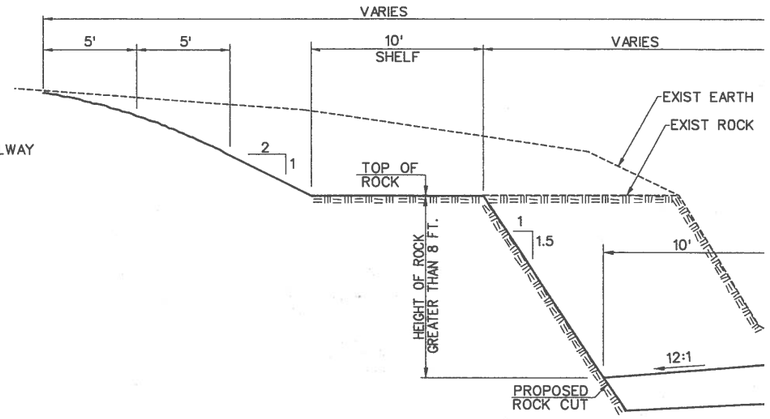

PARTIAL SECTION IN ROCK CUT
HEIGHT OF ROCK - GREATER THAN 8 FT.

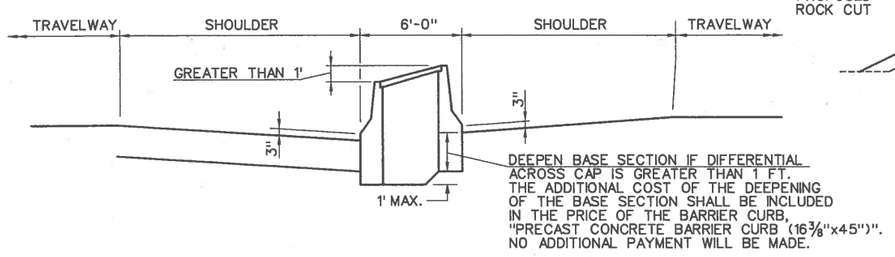

PLACEMENT OF PRECAST CONCRETE BARRIER CURB AT DIFFERENTIAL GUTTER ELEVATIONS

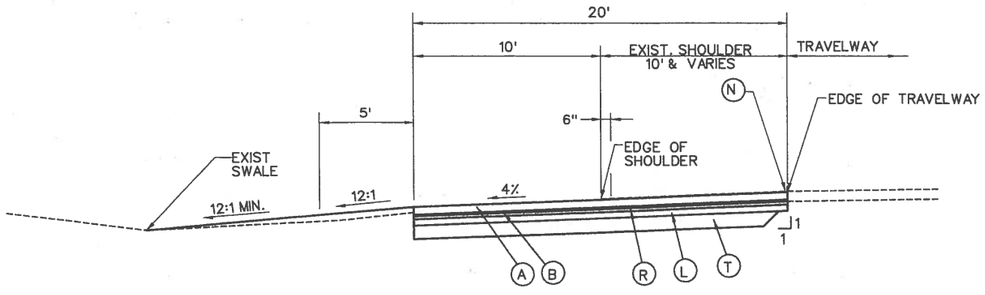

INCIDENT MANAGEMENT AREA
WITHOUT CURB

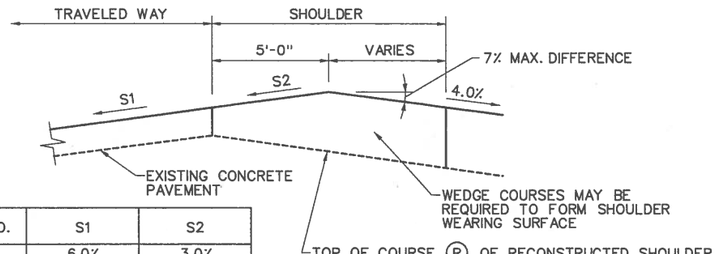

CURVE NO.	S1	S2
1	6.0%	3.0%
2	5.0%	2.0%
3	5.2%	2.2%
4	5.2%	2.6%
5	6.0%	3.0%
6	5.2%	2.2%
7	3.1%	-0.5%
8	4.5%	1.5%
9	5.1%	2.6%

GENERAL NOTES:

1. MAY REQUIRE ATTACHABLE EXTENSIONS OR CUT-OFF PLATES ON PAVING EQUIPMENT.
2. S2 SHALL BE 1% MINIMUM.
3. SHOULDER TO BE MILLED TO FINAL CROSS SLOPE AFTER MEDIAN RECONSTRUCTION AND PRIOR TO PLACEMENT OF FINAL WEARING SURFACE.

TREATMENT OF OUTSIDE SHOULDER AT HIGH SIDE OF BANK FOR TEMPORARY CONDITION

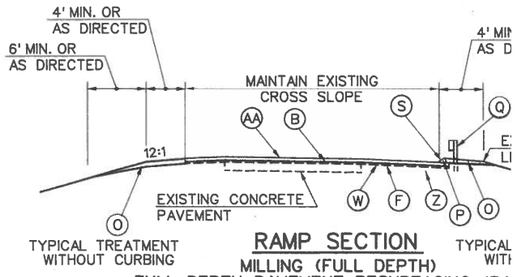

RAMP SECTION
MILLING (FULL DEPTH)
FULL DEPTH PAVEMENT RESURFACING (RA

THIS SHEET NOT CORRECTED

TYPICAL CROS

NO.	DATE
	- -
	- -
	- -
	- -
	- -
	- -

NOTEBOOK NO.	Traced	Designed	New Const. Noted	Top. Field Chk. Noted	RGS	DKS	10/21/99

TCS-2.DGN

35-176

805-61

HIGHWAY PLAN

F.H.W.A. REGION NO.	STATE	TOWN	FED. AID PROJ. NO.	PROJ. NO.
1	CONN.	DARIEN/NORWALK	IM-95-1(101)10	35-176

RECONSTRUCTION OF
AND RESURFACING O

SCALE IN FEET
0 40 80

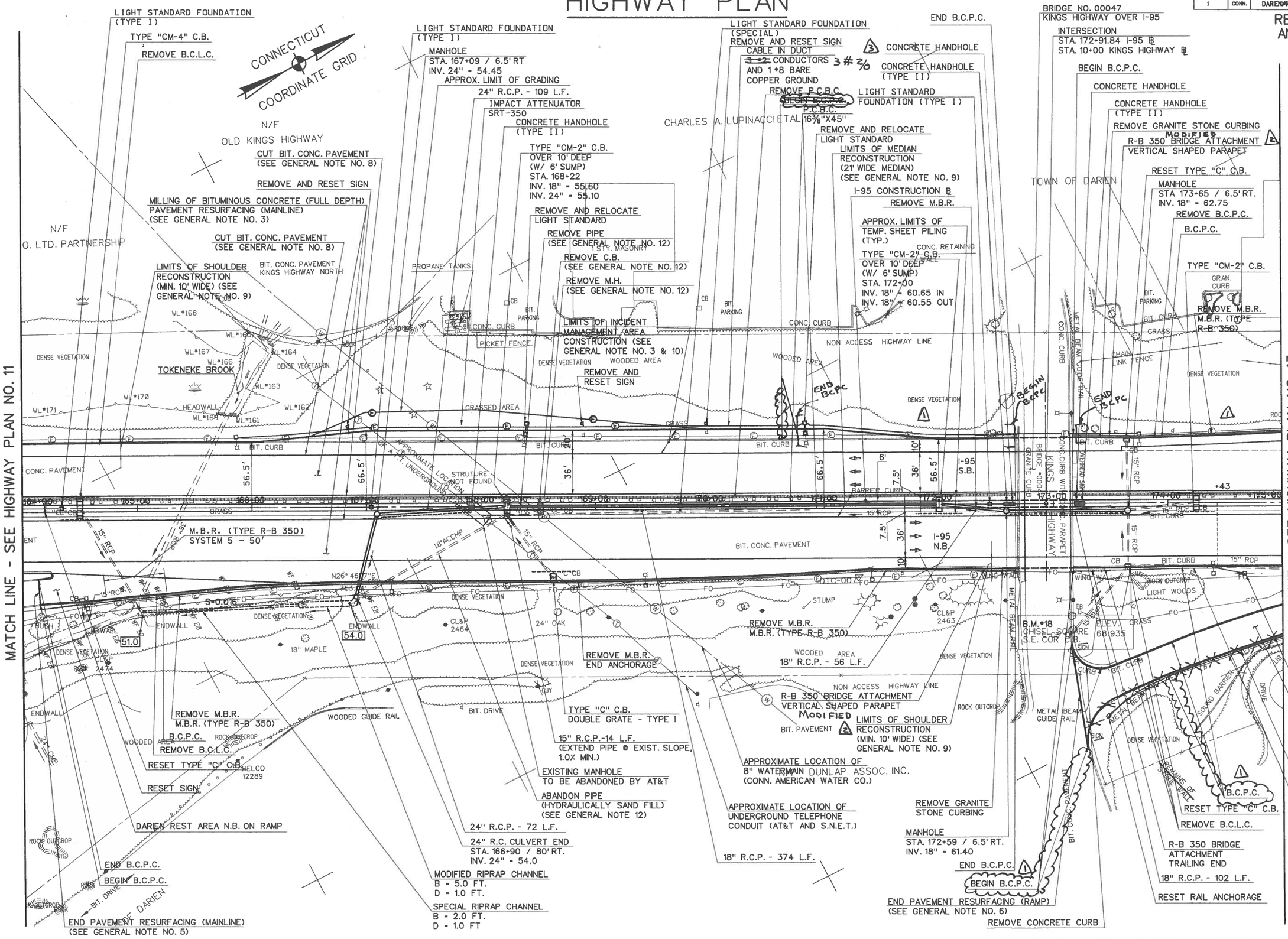

PLAN	BY	DATE	DESIGNED BY	DATE
Surveyed				
Plotted				
Traced	RGS	10/21/99	DNS	10/21/99
Designed				
New Const. Noted				
Typ. / Exc. Qtls. Noted				

NOTEBOOK NO.

SHEET12.DGN

HIGHW

NO.	DATE	
1	- -	Bc
2	- -	Mo
3	- -	Br
4	10-4-02	3 H
5	- -	Fo
	- -	

35-176

805.01

FEDERAL REGION NO.	STATE	TOWN	FED. AID PROJ. NO.	PR	N
1	CONN	DARIEN	IM-95-1(101)10	3	7

CROSS SECTIONS

SCALE 1 INCH = 10 FEET

RECONSTRUCTION OF M
AND RESURFACING OF

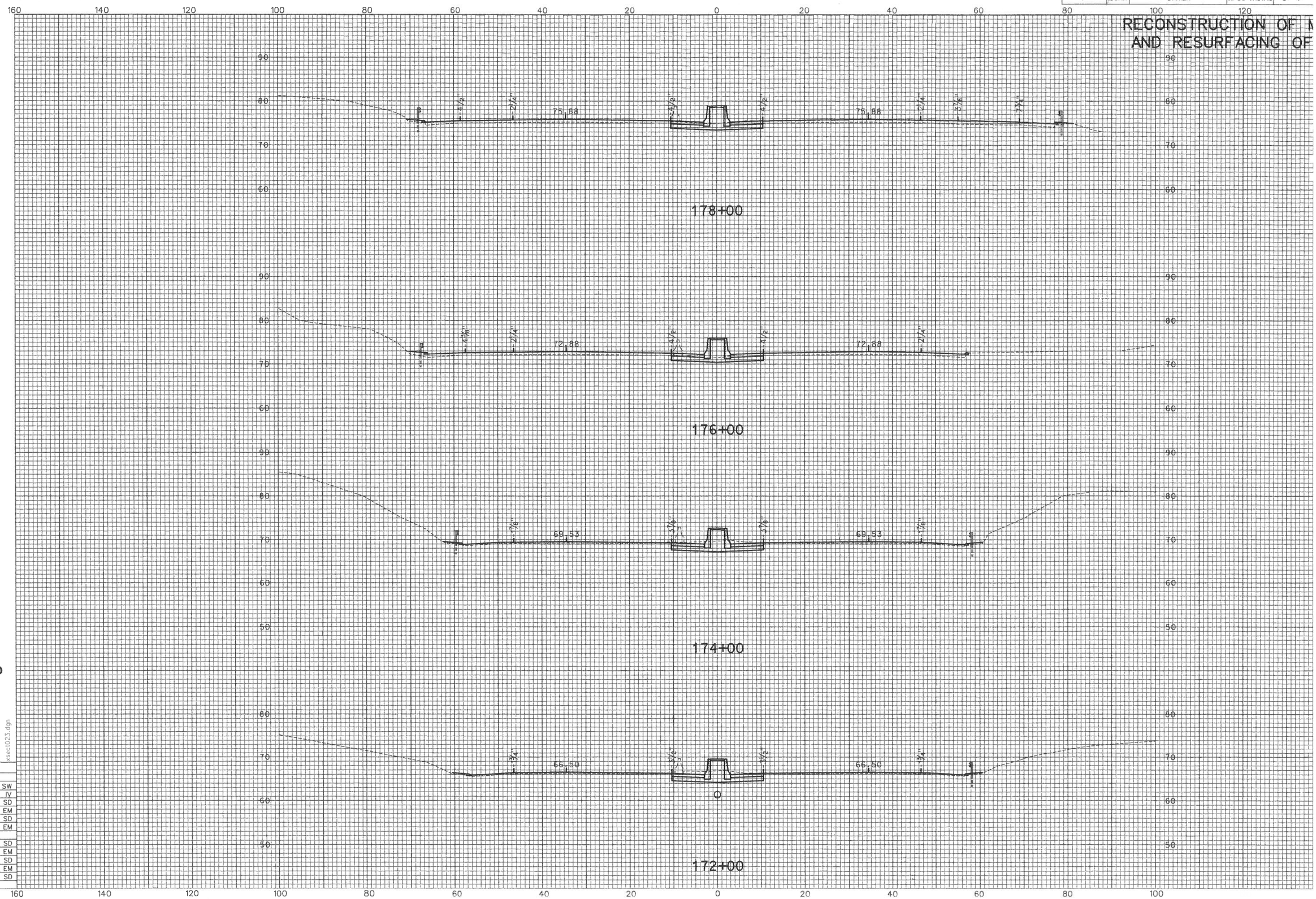

IS SHEET NOT CORRECTED

xsect023.dgn

NOTE BOOK NO.	
Ground Surface Plotted by	SW
" " Checked by	IV
Template Sections Plotted by	SD
" " Checked by	EM
Areas by	SD
" Checked by	EM
Final Sections Plotted by	SD
" " Checked by	EM
Final Areas by	SD
" " Checked by	EM
Quantity Transferred by	SD

35-174

805-01