TABLE OF CONTENTS OF SPECIAL PROVISIONS

Note: This Table of Contents has been prepared for the convenience of those using this contract with the sole express purpose of locating quickly the information contained herein; and no claims shall arise due to omissions, additions, deletions, etc., as this Table of Contents shall not be considered part of the contract.

Table of Contents

CONTRACT TIME AND LIQUIDATED DAMAGES 2
NOTICE TO CONTRACTOR – ENVIRONMENTAL INVESTIGATIONS 3
NOTICE TO CONTRACTOR – HAZARDOUS MATERIALS INVESTIGATIONS 7
NOTICE TO CONTRACTOR – PRE-BID QUESTIONS AND ANSWERS 8
NOTICE TO CONTRACTOR – PROJECT DESCRIPTION 9
NOTICE TO CONTRACTOR – SUBMITTALS 10
NOTICE TO CONTRACTOR – EARLY SUBMITTALS 12
NOTICE TO CONTRACTOR – SOLE SOURCE PRODUCTS 13
NOTICE TO CONTRACTOR – POTENTIAL FOR ASBESTOS 14
CONTAINING MATERIALS 14
NOTICE TO CONTRACTOR – PRE-INSTALLATION MEETINGS 15
NOTICE TO CONTRACTOR – CLOSEOUT DOCUMENTS 16
NOTICE TO CONTRACTOR – UTILITY SERVICE CONNECTIONS 18
[AND RELOCATIONS] 18
NOTICE TO CONTRACTOR – CAD FILES 19
NOTICE TO CONTRACTOR – SUPPLYING FUEL FOR STORAGE TANKS 20
NOTICE TO CONTRACTOR – SECTION 4.06 AND M.04 MIX 21
DESIGNATION EQUIVALENCY AND PG BINDER EQUIVALENCY 21
NOTICE TO CONTRACTOR – SUPERPAVE DESIGN LEVEL INFORMATION 24
SECTION 1.02 – PROPOSAL REQUIREMENTS AND CONDITIONS 25
SECTION 1.20 – GENERAL CLAUSES FOR FACILITIES CONSTRUCTION 26
CONTRACTOR CERTIFICATION: 36
RE/ASBESTOS CONTENT OF MATERIALS 36
ON-THE-JOB TRAINING (OJT) WORKFORCE DEVELOPMENT PILOT: 46
SMALL CONTRACTOR AND SMALL CONTRACTOR MINORITY 50
BUSINESS ENTERPRISES (SET-ASIDE) 50
ITEM #0020801A – ASBESTOS ABATEMENT 62
ITEM #0100069A – REMOVAL OF FUEL TANK(S) 79
ITEM #0100072A – REMOVAL AND DISPOSAL OF UNDERGROUND TANKS 82
ITEM #0101000A – ENVIRONMENTAL HEALTH AND SAFETY 87
ITEM #0101117A – CONTROLLED MATERIALS HANDLING 96
ITEM #0101126A – DISPOSAL OF HAZARDOUS WASTE 104
ITEM #0101128A – SECURING, CONSTRUCTION AND DISMANTLING 110
OF A WASTE STOCKPILE AND TREATMENT AREA 110
ITEM #0101143A – HANDLING AND DISPOSAL OF REGULATED ITEMS 113
ITEM #0101185A – REMOVAL OF HYDRAULIC SYSTEM 123
ITEM #0177150A – GENERAL BUILDING RENOVATION 127
ITEM #0202315A – DISPOSAL OF CONTROLLED MATERIALS 128
ITEM #0202452A – TEST PIT 133
ITEM #0969070A – CONSTRUCTION FIELD OFFICE FURNISHINGS 135
AND EQUIPMENT 135
INDEX OF CSI-FORMATTED SPECIFICATION AND 137
CORRESPONDING FORM 816 ITEM NUMBER 137
PERMITS AND/OR SUPPLEMENTAL TO FORM 816 AND REQUIRED PROVISIONS: 361
PERMITS: 362

November 2, 2016
FEDERAL AID PROJECT NO.N/A
STATE PROJECT NO. 0171-0418

Glastonbury and Hartford Maintenance Facilities Tank Replacement

Town of Glastonbury and City of Hartford
Federal Aid Project No.N/A

The State of Connecticut, Department of Transportation, Standard Specifications for Roads, Bridges, Facilities and Incidental Construction, Form 816, 2004, as revised by the Supplemental Specifications dated January 2016 (otherwise referred to collectively as "ConnDOT Form 816") is hereby made part of this contract, as modified by the Special Provisions contained herein. The current edition of the State of Connecticut Department of Transportation's "Construction Contract Bidding and Award Manual" ("Manual"), is hereby made part of this contract. If the provisions of this Manual conflict with provisions of other Department documents (not including statutes or regulations), the provisions of the Manual will govern. The Manual is available upon request from the Transportation Manager of Contracts. The Special Provisions relate in particular to the Glastonbury and Hartford Maintenance Facilities Tank Replacement in the Town of Glastonbury and City of Hartford.

CONTRACT TIME AND LIQUIDATED DAMAGES

Two Hundred Ten (210) calendar days will be allowed for completion of the work on this project and the liquidated damages charge to apply will be Two Thousand Dollars ($2,000.00) per calendar day.

NOTICE TO CONTRACTOR – ENVIRONMENTAL INVESTIGATIONS

Separate Task 210 Subsurface Site Investigations were conducted at both the Glastonbury and Hartford Maintenance Facilities, which evaluated soil and ground water quality within each of the facility's Project limits. Highlights of these environmental investigations, as they relate to environmental procedures and construction Plans and Specifications for this project, are presented below.

Glastonbury Maintenance Facility

As indicated in the Task 210 report for the Glastonbury facility, polycyclic aromatic hydrocarbons (PAHs) and extractable total petroleum hydrocarbons (ETPH) were detected in one or more soil samples collected around the perimeter of the underground storage tanks (USTs) in the Project Area, at concentrations that exceed the Residential Direct Exposure Criteria (RES DEC) and the GA Pollutant Mobility Criteria (GA PMC) of the Connecticut Remedial Standard Regulations (CT RSRs). Based on these findings, an Area of Environmental Concern (AOEC) has been established within the Project Area and is shown on Drawing ENV-002 of the Project Plans and Specifications. The Project involves the removal of a 4,000-gallon gasoline UST, a 4,000-gallon diesel fuel UST, and a 2,000-gallon fuel oil UST. The presence of contaminants of concern <u>will</u> require the soils excavated from the AOEC to be handled as Controlled Material (see Soil Management below).

In addition to the USTs, there is a 1,000-gallon propane above-ground storage tank (AST). The liquid contents and accumulated vapors from this tank will require removal by a State of Connecticut licensed LP Gas vendor, as indicated in Item No. 0100069A "Removal of Tanks."

Hartford Maintenance Facility

As indicated in the Task 210 report for the Hartford facility, volatile organic compounds (VOCs), PAHs, ETPH and metals (arsenic and lead), were detected in one or more soil samples collected around the perimeter of the USTs in the Project Area, at concentrations that exceed the RES DEC and/or the GB PMC. In addition, leachable lead concentrations (determined by the Toxicity Characteristic Leaching Procedure) exceeding 5 milligrams per liter (mg/l) have been documented within the shallow soils (0.5 to 2 feet below grade) in the Project area. Therefore, the entire Project Area has been designated as an AOEC. The Project involves the removal of a 4,000-gallon gasoline UST and a 4,000-gallon diesel fuel UST. The presence of contaminants of concern <u>will</u> require the soils excavated from the Project Area to be handled as Controlled Materials (see Soil Management below).

In addition to the removal of the USTs, there is a hydraulic lift that will also require removal/disposal. The hydraulic fluid from the lift, along with any other liquid waste resulting from its removal, will require proper disposal at an approved treatment/recycling/disposal facility in accordance with Item No. 0101143A, "Handling and Disposal of Regulated Items."

Soil Management

Glastonbury Maintenance Facility

Prior to intrusive activities, a waste stockpile area (WSA) will need to be established at the location shown on the Drawing ENV-003 of the Project Plan, and constructed in accordance with Item No. 0101128A "Securing, Construction and Dismantling of a Waste Stockpile and Treatment Area."

Soils excavated within the AOEC, and any impacted soils identified during the UST removals, will be considered Controlled Material. Controlled Material shall be staged in the WSA and managed in accordance with Item 0101117A, "Controlled Materials Handling." Metals were the only constituents of concern detected in the soils outside the area designated as an AOEC. The reported concentrations were low compared to their respective RSR criteria and likely represent background concentrations. Therefore, the soils excavated outside of the AOEC for the installation of the new tank systems or other project related site improvements will not require material handling measures beyond those required for normal construction operations. These soils shall remain segregated from those specifically identified as impacted soils by the Engineer as well as from subbase material excavated as a part of project construction and shall be utilized as fill/backfill within the Project limits, in accordance with the following conditions:

1. Such soil is deemed to be structurally suitable for use as fill by the Engineer;
2. Such soil is not placed below the water table;
3. Such soil is not placed in an area subject to erosion.

Excavated soils deemed suitable for reuse are to be reused on-site before other soils and/or fill such that materials requiring off-site disposal are minimized. Provisions will be made should there be excess material excavated outside of the AOEC that cannot be reused within the Project limits.

Hartford Maintenance Facility

Due to the Hartford Maintenance Facility's location within a Flood Control Zone, excavated Controlled Materials will not be permitted to be stockpiled on-site. Therefore, prior to any intrusive activities, an off-site WSA will need to be established at the Glastonbury Maintenance Facility as shown on the plans. The off-site WSA shall be constructed in accordance with Item No. 0101128A "Securing, Construction and Dismantling of a Waste Stockpile and Treatment Area."

Following the removal of the USTs, any impacted soils identified during the site investigation will require remediation by excavation and be managed as Controlled Material. In addition, any soil excavated for the installation of the new motor fuel AST system and site improvements shall be managed as Controlled Material. Site soils shall not be reused as backfill in any new utility trenches unless explicitly directed to do so by the Engineer.

The Controlled Materials shall be managed in accordance with Item 0101117A "Controlled Materials Handling." Pending disposal characterization, the Controlled Materials stored in the WSA will require disposal at an approved treatment/recycling/disposal facility in accordance with Item 0202315A "Disposal of Controlled Materials." Item 0101126A "Disposal of Hazardous Waste." has been included in this package in the event the material stored in the WSA is determined during characterization to meet the determination of hazardous waste.

Ground Water Management

Glastonbury Maintenance Facility

The CTDEEP ground water classification beneath the Glastonbury Project is "GA". During the investigation, ground water was encountered in the vicinity of the USTs at an approximate depth of seven feet below grade (ftbg). Grab ground water samples collected during the investigation yielded detectable concentrations of PAHs and metals. Although it is not anticipated that dewatering will be required during construction, should it be determined (in the opinion of the Engineer) that it is necessary, ground water will need to be evaluated for consistency with the applicable CTDEEP discharge permit, and provisions will be added if necessary.

In the event impacted ground water (visible petroleum sheen or product) is encountered following the removal of the USTs from the ground, the Contractor shall be prepared to dewater the excavation as directed by the Engineer, to achieve compliance with the CTDEEP UST Regulations. Wastewater generated as a result of these dewatering efforts shall be managed and disposed of in accordance with Item 0101143A "Handling and Disposal of Regulated Items."

Hartford Maintenance Facility

The CTDEEP ground water classification beneath the Hartford Project is "GB". During the investigation ground water was encountered in the vicinity of the USTs at an approximate depth of 15 ftbg. Grab ground water samples collected during the investigation yielded detectable concentrations of several VOCs, PAHs, ETPH and metals. Although it is not anticipated that dewatering will be required during construction, should it be determined (in the opinion of the Engineer) that it is necessary for Project related activities, ground water will need to be evaluated for consistency with the applicable CTDEEP discharge permit and provisions will be added if necessary.

As indicated above, petroleum impacts to the ground water have been documented at this site and an open CTDEEP Spill Case exists. Dewatering of the excavation following the removal of the USTs maybe required at this facility.

The Contractor is hereby notified that Controlled Materials requiring special management and/or disposal procedures will be encountered during various construction activities conducted within the Project limits at each site. Therefore, the Contractor will be required to implement appropriate health and safety measures for all construction activities to be performed within the areas of excavation within the project limits. These measures shall include, but are not limited to, air monitoring, engineering controls, personal protective equipment and decontamination,

equipment decontamination, and personnel training. WORKER HEALTH AND SAFETY PROTOCOLS WHICH ADDRESS POTENTIAL AND/OR ACTUAL RISK OF EXPOSURE TO SITE SPECIFIC HAZARDS ARE SOLELY THE RESPONSIBILITY OF THE CONTRACTOR.

The Sections which shall be reviewed by the Contractor include the following:

- Item No. 0101000A – Environmental Health and Safety
- Item No. 0100072A – Removal and Disposal of Underground Tanks
- Item No. 0101117A – Controlled Materials Handling
- Item No. 0202315A – Disposal of Controlled Materials
- Item No. 0101143A - Handling and Disposal of Regulated Items
- Item No. 0100069A - Removal of Fuel Tank(s)
- Item No. 0101185A – Removal of Hydraulic System
- Item No. 0101126A – Disposal of Hazardous Waste
- Item No. 0101128A - Securing, Construction and Dismantling of a Waste Stockpile and Treatment Area

The Contractor is alerted to the fact that a Department environmental consultant will be on site periodically during construction operations to observe site conditions for the State.

Information pertaining to the results of the environmental investigations discussed can be found in the documents listed below. These documents shall be available for review in the Project portal in ProjectWise.

- Task 210 – Subsurface Site Investigation Report, Glastonbury Maintenance Facility, Glastonbury, Connecticut. TRC, August 2016.
- Task 210 – Subsurface Site Investigation Report, Hartford Maintenance Facility, Hartford, Connecticut. TRC, July 2016.

NOTICE TO CONTRACTOR – HAZARDOUS MATERIALS INVESTIGATIONS

A limited hazardous materials site investigation has been conducted at the Glastonbury Maintenance Facility Boiler Room, Glastonbury, Connecticut. The scope of this inspection was limited to the representative components projected for demolition/removal. The results of the investigation indicated the presence of asbestos containing materials (ACM) and other miscellaneous regulated items projected for impact.

The Contractor is hereby notified that these hazardous materials requiring special management or disposal procedures will be encountered during various construction activities conducted within the project limits. The Contractor will be required to implement appropriate health and safety measures for all construction activities impacting these materials. These measures shall include, but are not limited to, air monitoring, engineering controls, personal protective equipment and decontamination, equipment decontamination and personnel training. WORKER HEALTH AND SAFETY PROTOCOLS WHICH ADDRESS POTENTIAL AND/OR ACTUAL RISK OF EXPOSURE TO SITE SPECIFIC HAZARDS ARE SOLELY THE RESPONSIBILITY OF THE CONTRACTOR.

The Department, as Generator, will provide an authorized representative to sign all manifests and waste profile documentation required by disposal facilities for disposal of hazardous materials.

The Sections which shall be reviewed by the Contractor include, but are not limited to, the following:

- Item No. 0101143A – Handling and Disposal of Regulated Items
- Item No. 0020801A – Asbestos Abatement

The Contractor is alerted to the fact that a Department environmental consultant may be on site for abatement and related activities, to collect environmental samples (if necessary), and to observe site conditions for the State.

Information pertaining to the results of the limited hazardous materials investigation discussed above can be found in the document listed below. This document shall be available for review electronically in the Project portal in ProjectWise.

- Survey Report, Asbestos Inspection Report, Glastonbury Maintenance Garage, Glastonbury, CT, EnviroMed, October 3, 2001

NOTICE TO CONTRACTOR – PRE-BID QUESTIONS AND ANSWERS

Questions pertaining to DOT advertised construction projects must be presented through the CTDOT Pre-Bid Q and A Website. The Department cannot guarantee that all questions will be answered prior to the bid date. **PLEASE NOTE - at 12:00 noon, the day before the bid, the subject project(s) being bid will be removed from the Q and A Website, Projects Advertised Section, at which time questions can no longer be submitted through the Q and A Website. At this time, the Q and A for those projects will be considered final, unless otherwise stated and/or the bid is postponed to a future date and time to allow for further questions and answers to be posted.**

If a question needs to be asked the day before the bid date, please contact the Contracts Unit staff and email your question to dotcontracts@ct.gov immediately.

Contractors must identify their company name, contact person, contact email address and phone number when asking a question. The email address and phone number will not be made public.

The questions and answers (if any) located on the Q and A Website are hereby made part of the bid/contract solicitation documents (located on the State Contracting Portal), and resulting contract for the subject project(s). It is the bidder's responsibility to monitor, review, and become familiar with the questions and answers, as with all bid requirements and contract documents, prior to bidding. By signing the bid proposal and resulting contract, the bidder acknowledges receipt of, and agrees to the incorporation of the final list of Q and A, into the contract document.

Contractors will not be permitted to file a future claim based on lack of receipt, or knowledge of the questions and answers associated with a project. All bidding requirements and project information, including but not limited to contract plans, specifications, addenda, Q and A, Notice to Contractors, etc., are made public on the State Contracting Portal and/or the CTDOT website.

NOTICE TO CONTRACTOR – PROJECT DESCRIPTION

The Project consists of replacement of the motor fueling facility and fuel oil storage tank on the site of the existing maintenance facility at 235 Oak Street in Glastonbury, Connecticut and replacement of the motor fueling facility on the site of the existing maintenance facility at 49 Jennings Road in Hartford, Connecticut as shown and described in the Contract.

The work at the Glastonbury Maintenance Facility includes replacement of the motor fuel underground storage tanks with aboveground storage tanks, replacement of the motor fuel island with dispensers installed adjacent to the tanks for unleaded gasoline and diesel fuel, removal of the fuel oil underground storage tank and propane aboveground storage tank, conversion of the facility to natural gas including replacement of the boilers and water heater, conversion of the existing generator from propane to natural gas, and connection of the motor fuel aboveground storage tanks to the existing tank monitoring system.

The work at the Hartford Maintenance Facility includes replacement of the motor fuel underground storage tanks with aboveground storage tanks, replacement of the motor fuel island with dispensers installed adjacent to the tanks for unleaded gasoline and diesel fuel, and connection to the existing tank monitoring system.

Environmental work associated with the Glastonbury Maintenance Facility includes monitoring of soils and developing an Environmental Health and Safety Plan, and Environmental work associated with the Hartford Maintenance Facility includes work with polluted soils and developing an Environmental Health and Safety Plan, as further specified in the NOTICE TO CONTRACTOR – ENVIRONMENTAL INVESTIGATIONS.

NOTICE TO CONTRACTOR – SUBMITTALS

Unless otherwise noted, the Designer will be the "submittal reviewer."

Any Product Samples that are to be sent to the Designer requiring review for conformance with the Contract shall be transmitted by letter and hand delivered or sent by mail directly to Mr. Gregory M. Dorosh, P.E., Transportation Principal Engineer, Facilities Design, Bureau of Engineering and Construction, Connecticut Department of Transportation, 2800 Berlin Turnpike, P.O. Box 317546, Newington, CT 06131-7546, Room 3405.

The Engineer will be the "submittal reviewer" for the following materials:

Concrete Mix Design Certifications
Asphalt Mix Design Certifications
Erosion Control Plan and Materials
Demolition Plan
Disposal Plan
Welding (Welder) Certificates
Certified Test Reports, Material Certificates, etc. from Form 816 Standard Items (non "A" Items from Bid List)
"Non-A" items, including those items in CSI-Formatted Specifications

Environmental Compliance will be the "submittal reviewer" for review of work identified in the following special provisions:

Item No. 0020801A – Asbestos Abatement
Item No. 0100069A – Removal of Fuel Tank(s)
Item No. 0100072A – Removal and Disposal of Underground Tanks.
Item No. 0101000A – Environmental Health and Safety.
Item No. 0101117A – Controlled Materials Handling
Item No. 0101126A – Disposal of Hazardous Waste
Item No. 0101128A – Securing, Construction and Dismantling of a Waste Stockpile and Treatment Area
Item No. 0101143A – Handling and Disposal of Regulated Items
Item No. 0101185A – Removal of Hydraulic System
Item No. 0202315A – Disposal of Controlled Materials

The Contractor shall send submittals e-mail alerts to the following key personnel:

Designer (Project Engineer): Jesse A. Benson
Designer (Project Manager):
Designer (Consultant Project Manager):
Construction Project Chief Inspector:
Construction Supervising Engineer:

Owner:
Operator:

Add the following for submittals where Environmental Compliance is listed in NOTICE TO CONTRACTOR – SUBMITTALS as the "submittal reviewer:"

Environmental Designer (Project Engineer):
Environmental Designer (Project Manager):

Other key construction personnel will be identified at the Pre-Construction Meeting.

NOTICE TO CONTRACTOR – EARLY SUBMITTALS

The Contractor is hereby advised that the Department has identified the potential need to order certain materials and equipment, and thereby submit certain submittals for approval early in the construction process to ensure the Project is completed within the allowable Contract Time. Submittals shall be in accordance with Form 816 Article 1.20-1.05.02. The following items have been identified as possibly requiring early ordering thereby requiring early submission of shop drawings and product data:

Aboveground Storage Tanks
Exterior Lighting Fixtures

The following items have been identified as possibly requiring early submission for purposes of project coordination and project work scheduling:

Baseline Critical Path Schedule
Contractor's Submittal Schedule

The lists above are not intended to be all-inclusive and do not relieve the Contractor from coordinating the activities of its subcontractors and suppliers. The Contractor will not be permitted to perform any physical work on the Project without the approval of the required submittals. Failure to properly plan for long lead items within the Contract schedule will not be justification for additional construction time.

It is recommended that the Contractor identify early in the construction sequencing process the subcontractors and suppliers associated with long lead-time items and submit the appropriate shop drawings and supporting data, including color selection charts and samples, for review upon Notice to Proceed.

NOTICE TO CONTRACTOR – SOLE SOURCE PRODUCTS

For operational purposes, the Department has determined the need to sole source products specified in the following Contract provisions (including specific CSI-formatted Specifications contained within a particular Special Provision):

1. Automated Fuel Management System: Division 13 Section 132160, "Installation of New Fuel Facility."

No "Or Equals" will be permitted. Said products shall be installed only by their factory authorized installer or service representative. The Contractor shall bid the Project accordingly.

NOTICE TO CONTRACTOR – POTENTIAL FOR ASBESTOS CONTAINING MATERIALS

The Contractor shall submit manufacturer certification letters for all materials specified in the following Contract provisions (including CSI-formatted specifications contained within a particular special provision):

1. Division 7 Section 079200, "Joint Sealants."
2. Division 22 Section 223400, "Fuel-Fired Domestic-Water Heaters."
3. Division 23 Section 230719, "HVAC Piping Insulation."
4. Division 23 Section 232113, "Hydronic Piping."
5. Division 23 Section 235100, "Breechings, Chimneys, and Stacks."
6. Division 23 Section 235223, "Cast-Iron Boilers."
7. Division 26 Section 260519, "Low-Voltage Electrical Power Conductors and Cables."
8. Division 26 Section 260544, "Sleeves and Sleeve Seals for Electrical Raceways and Cabling."

The above list may not be all-inclusive and does not relieve the Contractor from its responsibility to provide manufacturer certification letters that are required under other Contract provisions. Furthermore, the Department may at any time require the Contractor to submit manufacturer certification letters proving that other materials do not contain asbestos.

NOTICE TO CONTRACTOR – PRE-INSTALLATION MEETINGS

The Engineer will conduct a pre-installation meeting at the Project Site before each of the following construction activities:

1. Concrete: CSI Division 3 Section 033000, "Cast-In-Place Concrete."
2. Fuel Facility: CSI Division 13 Section 132160, "Installation of New Fuel Facility."
3. Building Automation System: CSI Division 23 Section 230900, "Instrumentation and Control for HVAC."

The above list may not be all-inclusive and does not relieve the Contractor from its responsibility to provide pre-installation meetings that are required under other Contract provisions.

NOTICE TO CONTRACTOR – CLOSEOUT DOCUMENTS

General: The list of special provisions (including CSI-formatted specifications) in the Table below may not be all-inclusive and does not relieve the Contractor from its responsibility to provide spare parts, operation and maintenance manuals, training, and warranties that are required under other Contract provisions.

Spare Parts: The Contractor shall deliver spare parts on products listed in the Table below to the Project Site.

Operation and Maintenance Manuals: Submit 3 copies of each manual to the Designer. The Designer and the Owner Mr. David A. Hartley, Office of Property and Facilities Services will review the manuals for conformance to the Contract. The manuals will be processed in accordance with Form 816 Article 1.20-1.05.02, with 3 copies being forwarded to the Owner with a transmittal letter being sent to the Engineer.

Product Maintenance Manual: The Contractor shall provide complete information in the materials and finishes manual on products listed in the Table below.

Equipment and Systems Maintenance Manuals: The Contractor shall provide complete information in the equipment and systems manual on products listed in the Table below.

Training: The Contractor shall provide training on products listed in the Table below.

Warranties: Submit 3 copies of written warranties, including special warranties to the Designer. The Designer and the Owner will review the warranties for conformance to the Contract. The warranties will be processed in accordance with Form 816 Article 1.20-1.05.02, with 3 copies being forwarded to the Owner with a transmittal letter being sent to the Engineer.

The Contractor shall provide special warranties on products and installations listed in the Table.

TABLE

Special Provision (including CSI-formatted Specifications)	Warranties	Spare Parts	Training	Operation and Maintenance Manuals
CSI Section 132160, “Installation of New Fuel Facility”	X		X	X
CSI Section 132180, “Tank Monitoring System”			X	X
CSI Section 223400, “Fuel-Fired Domestic-Water Heaters”	X			X
CSI Section 231123, “Facility Natural-Gas Piping”				X
CSI Section 235223, “Cast-Iron Boilers”	X		X	X
CSI Section 262416, “Panelboards”		X		X

Special Provision (including CSI-formatted Specifications)	Warranties	Spare Parts	Training	Operation and Maintenance Manuals
CSI Section 262813, “Fuses”		X		X
CSI Section 226816, “Enclosed Switches and Circuit Breakers”				X
CSI Section 265600, “Exterior Lighting”	X	X		X

NOTICE TO CONTRACTOR – UTILITY SERVICE CONNECTIONS [AND RELOCATIONS]

The gas service to the Project Site require service connections the applicable utility company's facilities. Utility service connection installations to the point of the utility service are included as shown and described within the Contract.

Unless otherwise noted, the Contractor is responsible for notifying each utility company a minimum of 8 weeks' notice prior to the need for the utility to perform any work, and for coordinating the service connection requirements with the utility company. The Contractor shall coordinate with the following utility companies:

Gas: Connecticut Natural Gas Corporation

Where known, utility company representative names are identified within the Contract.

NOTICE TO CONTRACTOR – CAD FILES

The Contractor is hereby advised that CAD files will not be provided to construction contract bidders, the Contractor, or any subcontractor. Contract documents, including plans, are provided in Portable Document Format (PDF).

The Department AEC Applications unit has prepared technical reference materials on extending the utility of PDF contract plan sheets. See the Repurposing PDF Contract Plan Sheets web page (http://www.ct.gov/dot/cwp/view.asp?a=2288&Q=567262&PM=1).

The Contractor shall bid the Project accordingly.

NOTICE TO CONTRACTOR – SUPPLYING FUEL FOR STORAGE TANKS

The Contractor shall fill all fuel oil, gasoline, and diesel fuel storage tanks. A sample from each tanker shall be tested to confirm the product's conformance to the State's requirements UNLESS the fuel is supplied by one of the Department's current fuel vendors. The sample shall be taken in the presence of the Engineer. Refer to CSI Section 132160, titled "Installation of New Fuel Facility" for additional information in this regard. The fuel shall remain in the storage tanks and shall become the property of the Engineer upon the acceptance of the Project. The Contractor is responsible for the fuel, including any leaks and spills until the Engineer accepts the Project.

Allowances for purchasing fuel are included in the above referenced specifications.

The Contractor shall bid the Project accordingly.

NOTICE TO CONTRACTOR – SECTION 4.06 AND M.04 MIX DESIGNATION EQUIVALENCY AND PG BINDER EQUIVALENCY

Sections 4.06 and M.04 have been replaced in their entirety with the Special Provisions included as part of this contract. These Special Provisions reflect changes in mix designations for various types of hot-mix asphalt (HMA) and include the removal of mixes designed and governed by the Marshall Mix Design method. The following table is to be used to associate mix designations noted on the plans with those in the contract specifications and related documents. Mix designations on each row are equivalent and refer to a single mix, which shall be subject to the requirements of the Section 4.06 and M.04 Special Provisions for the Official Mix Designation in the leftmost column of the corresponding row in the table.

Mix Designation Equivalency Table

Official Mix Designation	Equivalent Mix Designation (a)	Equivalent Mix Designation (b)
(c)	Superpave 1.5 inch	Superpave 37.5 mm
HMA S1	Superpave 1.0 inch	Superpave 25.0 mm
HMA S0.5	Superpave 0.5 inch	Superpave 12.5 mm
HMA S0.375	Superpave 0.375 inch	Superpave 9.5 mm
HMA S0.25	Superpave 0.25 inch	Superpave 6.25 mm
(c)	Superpave #4	Superpave #4
HMA S0.5 (d)	Bituminous Concrete Class 1 **(e)**	Bituminous Concrete Class 1 **(e)**
HMA S0.375 (d)	Bituminous Concrete Class 2 where it is specificed in lifts 1.25 or thicker **(e)**	Bituminous Concrete Class 2 where it is specificed in lifts 1.25 or thicker **(e)**
HMA S0.25 (d)	Bituminous Concrete Class 2 where it is specified in lifts 1.0 inches to less than 1.25 inches **(e)**; Bituminous Concrete Class 12 **(e)**	Bituminous Concrete Class 2 where it is specified in lifts 1.0 inches to less than 1.25 inches **(e)**; Bituminous Concrete Class 12 **(e)**
HMA S1 (d)	Bituminous Concrete Class 4 **(e)**	Bituminous Concrete Class 4 **(e)**
Curb Mix	Bituminous Concrete Class 3	Bituminous Concrete Class 3

Notes

(a) This mix designation is generally included with projects where the English measurement system is used. The mix designation may contain both the English measurement system

designation and the SI (metric) measurement system designation, one of which would be in parenthesis.

(b) This mix designation is generally included with projects where the SI (metric) measurement system is used. The mix designation may contain both the English measurement system designation and the SI measurement system designation, one of which would be in parenthesis.

(c) This mix is no longer in use except by contract-specific Special Provision; if this mix is called for in the Plans but no such Special Provision is included for this contract a suitable substitute must be approved by the Engineer.

(d) Unless approved by the Engineer, the Superpave Design Level for the Official Mix Designation bituminous concrete replacing a Marshall mix called for in the plans or other contract documents shall be Design Level 2 for mixes used on mainline or shoulders of state-maintained roadways and Design Level 1 elsewhere, including but not limited to driveways or sidewalks.

(e) All mixes designed under the Marshall mix-design method are no longer covered by the 4.06 Special Provision. Wherever they appear in Contract plans and documents they shall be substituted by the "Official Mix Designation" in the same row of the Mix Designation Equivalency Table. Unless approved by the Engineer, the Superpave Design Level shall be Level 1.

PG Binder Designation Equivalency Table

Official Binder Designation	Equivalent Binder Designation	Use
PG 64S-22	PG 64-22	Hot-Mix Asphalt (HMA S* pay items and pay items using HMA S* materials)**(a),(b)**
PG 64E-22	PG 76-22	Polymer-Modified Asphalt (PMA S* pay items and pay items using HMA S* materials)**(a),(b)**

Notes

(a) Use the Mix Designation Equivalency Table above to identify the Official Mix Designation for materials using the Marshall mix design method, i.e. "Bituminous Concrete Class *."

(b) Refer to the NTC – Superpave Design Level for the Superpave Design Level to use for each mix on a project. The PG Binder Designation Equivalency Table can be used to obtain the Official Binder Designation for each mix identified in the NTC – Superpave Design Level.

NOTICE TO CONTRACTOR – SUPERPAVE DESIGN LEVEL INFORMATION

Hot-Mix Asphalt (HMA) and Polymer-Modified Asphalt (PMA) constructed according to the Superpave mix-design system are required to attain a Superpave Design Level and are required to use a Performance Graded (PG) binder. The Superpave Design Levels required for this project are listed in Table 1. The required PG binder is indicated for each mix with an "X" in the appropriate box in Table 1.

TABLE 1 – Superpave Design Level and Performance Graded (PG) Binder

Mix Designation	PG Binder		Glastonbury___&___Hartford_____	Route _____ _____ _____ _____	Route _____ _____ _____ _____	Route _____ _____ _____ _____	Route _____ _____ _____ _____
	PG 64S-22	PG 64E-22	Design Level	Design Level	Design Level	Design Level	Design Level
HMA S0.25	-	-	-	-	-	-	-
HMA S0.375	X	-	2	-	-	-	-
HMA S0.5	-	-	-	-	-	-	-
HMA S1	-	-	-	-	-	-	-
PMA S0.25	-	-	-	-	-	-	-
PMA S0.375	-	-	-	-	-	-	-
PMA S0.5	-	-	-	-	-	-	-
PMA S1	-	-	-	-	-	-	-

Note: Please note that PMA mix designations typically use PG 64E-22 and HMA mix designations use PG 64S-22

SECTION 1.02 – PROPOSAL REQUIREMENTS AND CONDITIONS

Article 1.02.04 – Examination of Plans, Specifications, Special Provisions and Site of Work:

Replace the third sentence of the last paragraph with:

The Department cannot ensure a response to inquiries received later than ten (10) days prior to the original scheduled opening of the related bid.

SECTION 1.20 – GENERAL CLAUSES FOR FACILITIES CONSTRUCTION

1.20-1.00 – General:

Delete the second sentence in the first paragraph and replace with the following:

"The Department has determined that this Project is Facilities Construction and therefore Section 1.20 applies."

1.20-1.01.01--Definitions:

"EQUAL: A material, device, type of equipment, or method other than what is specified in the Contract, which is a recognized equivalent in substance and function for that specified thing, taking into account warranty, performance, weight, size, visual effect, specific features and requirements indicated, quality, workmanship, economy of operation, durability, and suitability for purposes intended provided that the proposed equivalent would not constitute a change in Contract work."

1.20-1.02.13—Knowledge of Applicable Laws:

"All work to be performed by the Contractor shall comply with, as a minimum, the State Building Code as adopted pursuant to CGS 29-252, as amended; the State Fire Prevention Code as adopted pursuant to CGS 29-291a and the Fire Safety Code as adopted pursuant to CGS 29-292, as amended.

The State Building Code, including latest Connecticut Supplements and Amendments, includes the following:

1. The 2003 International Building Code.
2. The 2003 International Plumbing Code.
3. The 2003 International Mechanical Code.
4. The 2003 International Existing Building Code.
5. The 2009 International Energy Conservation Code.
6. The 2011 NFPA 70 National Electrical Code.
7. The 2003 ICC/ANSI A117.1.

The State Fire Safety Code, including latest Connecticut Supplements and Amendments, includes the following:

1. The 2003 International Fire Code.
2. The 2003 NFPA 101 Life Safety Code.

The State Fire Prevention Code, including latest Connecticut Supplements and Amendments, includes the following:

1. The 2012 NFPA 1.

The edition of the code governing the Project shall be the code which is in effect as per the above CGS Sections on the date that the Contract is advertised for solicitation of bids.

All work to be performed by the Contractor shall also comply with the 2010 Department of Justice "ADA Standards for Accessible Design.""

1.20-1.03.08—Notice to Proceed and Commencement of Work:

Delete the first paragraph of 1.03.08 and replace with the following:

"The Contractor shall commence and proceed with the Contract work on the date specified in a written Notice to Proceed issued by the Engineer to the Contractor. The date specified will be no later than 45 calendar days after the date of the execution of the Contract by the Department."

Delete Article 1.20-1.05.02 and replace it with the following:

"1.20-1.05.02— Contractor Submittals:

1. General: If the plans prepared by the Department do not show complete details, they will show the necessary dimensions and preliminary details, which when used along with the other Contract documents, will enable the Contractor to prepare submittals necessary to complete the Contract work.

The Contractor is required to prepare submittals as Portable Document Format (PDF) files using Bluebeam Revu.

The Contractor is also required to acquire and maintain access to the Department's Bentley ProjectWise data management system portal. The minimum recommended internet speed is 25MB/sec. For reference, the Department's internet speed is 1 GB/sec.

The Contractor shall submit a "CT DOT ProjectWise – New User Form" to request user names and passwords. The Department will permit Web-based access and no more than 2 users for the Contractor.

The entry/log-in procedure is described in Section 3.2 of the CT DOT Digital Project Development Manual.

2. Submittal Preparation and Processing: The Contractor shall:

(a) Coordinate preparation and processing of submittals with performance of construction activities;

(b) Transmit each submittal sufficiently in advance of performance of related construction activities to avoid delay;

(c) Coordinate each submittal with fabrication, purchasing, testing, delivery, and other submittals and related activities that require sequential activity;

(d) Provide complete submittal packages as multi-page PDF's (Working Drawings, Shop Drawings, Product Data, Product Samples, and Quality Assurance Submittals, as applicable) for related elements of Project work for a concurrent review of all information. Incomplete submittal packages will be returned to the Contractor without being reviewed. Electronic PDF packages shall be limited to 75 MB unzipped; larger PDF packages will need to be broken up.

The Contractor shall allow at least 21 calendar days for initial submittal review by the submittal reviewer, and allow additional time for such review if processing must be delayed to permit coordination with subsequent submittals. If a subsequent submittal is necessary, the Contractor shall allow at least 21 additional calendar days for processing each subsequent submittal. The submittal reviewer reserves the right to withhold action on a submittal if coordination with other submittals is necessary, until all related submittals are received. The submittal reviewer will promptly inform the Contractor when a submittal being processed must be delayed for such coordination.

The Contractor shall allow at least 28 calendar days for outside agency review of any submittal requiring their approval, including but not limited to the following: any utility, FTA, any railroad, DEEP, U.S. Coast Guard, Army Corps of Engineers, FM Global, and any Commissioning Authority.

The Engineer will not authorize an extension of Contract time because of the Contractor's failure to transmit submittals to the submittal reviewer or outside agencies sufficiently in advance of the work to permit processing.

The Contractor shall be limited to one acceptable submittal per product. Once a product has been accepted either as originally specified, or as an "Or Equal" to the product specified, the Contractor may elect to submit a subsequent product for consideration, but the Contractor shall be required to reimburse the Department for all costs associated with reviewing the subsequent request.

The Contractor shall attach a Submittal Transmittal Form to the beginning of each PDF submittal package. A blank Submittal Transmittal Form is located in ProjectWise "01.0 – Projects-Active" under the subfolder "120_Contractor_Submittals (PDF)" under the project number main folder. This form will be used for the Contractor to digitally certify that "Having reviewed this submittal, I certify that it is complete, accurate, coordinated in all aspects of the item being submitted and conforms to the requirements of the Contract in all respects, including all Federal requirements such as "Buy America", except as otherwise noted." The digital certification process is detailed in Section 2 of the CT DOT Digital Project Development Manual.

3. Transmittal of Submittals: The digitally certified PDF submittal package shall be uploaded into ProjectWise "01.0 – Projects-Active" under the subfolder "120_Contractor_Submittals (PDF)" under the project number main folder. The upload process is detailed in Section 3.2.1-3 of the CT DOT Digital Project Development Manual. The submittal reviewer will not act on submittals received in any other manner.

The Contractor shall attribute the submittal packages in ProjectWise using the following the following attributes and naming conventions:

a) Discipline: CTR
b) Main Category: CONTRACTOR
c) Sub Category: SUBMITTAL
d) Label: "XXX-Spec Reference-##"
   "XXX" is the chronological submittal number created by the Contractor starting at 01
   For individual Contract Items: "Spec Reference" is the 7-digit Contract Item No. (No "A" shall be included), or for the Major Lump Sum Item (MLSI) Item: "Spec Reference" is the 6-digit CSI Section Number preceded by a "C" (making it a total of 7 digits). No submittals will be accepted using the 7 digit item number for the MLSI
   "Submittal #" is 01, 02, 03, etc.
e) Description: Brief description of submittal content.

The first submission for a particular item is the "01" submittal. Subsequent resubmittals (02, 03, etc.) are transmitted as described above only for those submittals or portions thereof returned to the Contractor with a "Revise and Resubmit" or "Rejected" disposition. The chronological submittal number shall not be revised on a resubmittal.

After uploading an initial or subsequent submittal, the Contractor shall provide e-mail notification to submittal reviewers and other key personnel at their business e-mail address that the submittals have been uploaded and are available for review. The Contractor shall provide a web link to the PDF submittal within their e-mail notification. The Contractor shall include the following information in the notification e-mail subject line in this order: project number, item number, item description, and submittal # (e.g. 01, 02, 03, etc.). The submittal review time begins when the submittal reviewer is notified by e-mail.

4. Submittal Schedule: At the Pre-Construction Meeting, the Contractor shall submit the initial submittal schedule. The initial submittal schedule will include all submittals required during the first 60 calendar days of construction, all submittals required to maintain orderly progress of the Work, and all submittal required early because of long lead time for manufacture or fabrication.

Following the Engineer's response to the initial submittal, the Contractor shall provide copies of the schedule to the Engineer, Designer, the Contractor's subcontractors, and other parties required to comply with submittal dates indicated.

The Contractor shall submit the complete submittal schedule within 60 calendar days of the Notice to Proceed.

The Contractor shall update its submittal schedule once a month and distribute and post each updated schedule in the manner described above.

The submittal schedule shall be organized in numerical order by special provision number and by CSI-formatted specification section number. The Contractor shall include (1) time required for review, ordering, manufacturing, fabrication, and delivery when establishing dates; and (2) additional time required for making corrections or revisions to submittals noted by Designer or

Engineer and additional time for handling and reviewing submittals required by those corrections. The Contractor shall coordinate submittal schedule with its subcontracts, the schedule of values, and their construction schedule.

5. Working Drawings (Delegated Design Submittals): When required by the Contract, or when ordered to do so by the Engineer, the Contractor shall prepare and submit working drawings, signed, sealed and dated by a qualified Professional Engineer licensed to practice in the State of Connecticut, for review.

There will be no direct payment for furnishing any working drawings, procedures or supporting calculations, but the cost thereof shall be considered as included in the general cost of the work.

a. Working Drawings for Permanent Construction: The Contractor shall submit drawings to the Designer on 22 in x 34 in sheets with a border and title block similar to the Department standard. Each drawing shall be a separate PDF file. Drawings shall be searchable. The first drawing shall include the Contractor's designer's Professional Engineer's digital signature, meeting the requirements of Adobe's Certified Document Services (CDS), and all other drawings shall include a watermark of the Professional Engineer's stamp in a common area of the border. Calculations, procedures and other supporting data may be submitted in an 8-1/2 in x 11 in format and shall be in a single PDF file. The first sheet of calculations shall include the Contractor's designer's Professional Engineer's digital signature, meeting the CDS requirements, Documents shall be named "Drawings," "Calculations," or "Supporting Documentation" as applicable.

   The Contractor's designer, who prepares the working drawings, shall secure and maintain at no direct cost to the State a Professional Liability Insurance Policy for errors and omissions in the minimum amount of $2,000,000 per error or omission. The Contractor's designer may elect to obtain a policy containing a maximum $250,000 deductible clause, but if the Contractor's designer should obtain a policy containing such a clause, they shall be liable to the extent of at least the deductible amount. The Contractor's designer shall obtain the appropriate and proper endorsement of its Professional Liability Policy to cover the indemnification clause in this Contract, as the same relates to negligent acts, errors or omissions in the Project work performed by them. The Contractor's designer shall continue this liability insurance coverage for a period of (1) 3 years from the date of acceptance of the work by the Engineer, as evidenced by a State of Connecticut, Department of Transportation Form Number CON-500, entitled "Certificate of Acceptance of Work," issued to the Contractor; or (2) 3 years after the termination of the Contract, whichever is earlier, subject to the continued commercial availability of such insurance. The Contractor shall supply to the Assistant District Engineer a certificate of insurance in accordance with Article 1.03.07 at the time that the working drawings for the Project are submitted.

b. Working Drawings for Temporary Construction: The Contractor shall submit drawings, calculations, procedures and other supporting data to the Assistant District Engineer in a format acceptable to the Assistant District Engineer.

c. Working Drawings for Permanent Construction: Drawings shall be submitted to the Designer on 22 in x 34 in sheets with a border and title block similar to the Department standard. Each drawing shall be a separate PDF file. Drawings shall be searchable. The first drawing shall include the Contractor's designer's Professional Engineer's digital signature, meeting the requirements of Adobe's Certified Document Services (CDS), and all other drawings shall include a watermark of the Professional Engineer's stamp in a common area of the border. Calculations, procedures and other supporting data may be submitted in an 8-1/2 in x 11 in format and shall be in a single PDF file. The first sheet of calculations shall

include the Contractor's designer's Professional Engineer's digital signature, meeting the CDS requirements, Documents shall be named "Drawings," "Calculations," or "Supporting Documentation" as applicable.

6. Shop Drawings: When required by the Contract, or when ordered to do so by the Engineer, the Contractor shall prepare and submit shop drawings for review. Drawings shall be submitted on 22 in x 34 in sheets with an appropriate border and with a title block in the lower right-hand corner of each sheet. Each drawing shall be a separate PDF file. Drawings shall be searchable.

Shop Drawings consist of fabrication and installation drawings, roughing-in and setting drawings, schedules, patterns, templates and similar drawings, and wiring diagrams showing field-installed wiring, including power, signal, and control wiring. Standard information prepared without specific reference to the Project shall not be considered to be a Shop Drawing. Shop Drawings shall be project specific.

Shop drawings shall include the following information: Contract number, Project description, number and title of the drawing, date of drawing, revision number, name of Contractor and subcontractor submitting drawings, dimensions, identification of products, shop work manufacturing instructions, design calculations, statement of compliance with Contractual standards, notation of dimensions established by field measurement, notation of coordination requirements, relationship to adjoining construction clearly indicated, seal and signature of a professional engineer if specified, and any other information required by individual Contract provisions.

There will be no direct payment for furnishing any shop drawings, procedures or supporting calculations, but the cost thereof shall be considered as included in the general cost of the work.

7. Coordination Drawings: When required by the Contract, or when ordered to do so by the Engineer, the Contractor shall prepare and submit coordination drawings for review. Each drawing shall be a separate PDF file. Drawings shall be searchable.

The Contractor shall prepare coordination drawings according to requirements in other Contract provisions, and additionally where installation is not completely shown on Shop Drawings, where limited space availability necessitates coordination, or if coordination is required to facilitate integration of products and materials fabricated or installed by more than one entity.

Coordination Drawings shall include Project-specific information drawn accurately to a scale large enough to indicate and resolve conflicts. Coordination Drawings shall not be based on standard printed data. Coordination Drawings shall include the following information, as applicable: (1) use applicable plans as a basis for preparation of Coordination Drawings and prepare sections, elevations, and details as needed to describe relationship of various systems and components; (2) coordinate the addition of trade-specific information to the coordination drawings by multiple contractors in a sequence that best provides for coordination of the information and resolution of conflicts between installed components before submitting for review; (3) indicate functional and spatial relationships of components of architectural, structural, civil, mechanical, and electrical systems; (4) indicate space requirements for routine

maintenance and for anticipated replacement of components during the life of the installation; (5) show location and size of access doors required for access to concealed dampers, valves, and other controls; (6) indicate required installation sequences; (7) indicate dimensions shown on the plans, specifically noting dimensions that appear to be in conflict with submitted equipment and minimum clearance requirements, and (8) provide alternate sketches to the Designer indicating proposed resolution of such conflicts.

There will be no direct payment for furnishing any coordination drawings, but the cost thereof shall be considered as included in the general cost of the work.

8. Product Data: When required by the Contract, or when ordered to do so by the Engineer, the Contractor shall prepare and submit product data for review in a PDF file.

The Contractor shall provide all product data in a single submittal for each element of construction or system and shall mark each submittal with the Contract item number.

The Contractor shall mark each copy of a product data submittal to show applicable choices and options. Where product data includes information on several products that are not required, copies shall be marked to indicate the applicable information. Product data shall include the following information and confirmations to the extent applicable: manufacturer's printed recommendations, compliance with recognized trade association standards, compliance with recognized testing agency standards, application of testing agency labels and seals, notation of coordination requirements, and any other information required by the individual Contract provisions.

There will be no direct payment for furnishing any product data, but the cost thereof shall be considered as included in the general cost of the work.

9. Product Samples: When required by the Contract, or when ordered to do so by the Engineer, the Contractor shall prepare and submit product samples for review.

Product Samples are samples submitted for review and action by the Designer, which are: (1) physically identical to the proposed product or material cured and finished as required by the Contract; or (2) submitted for review of kind, color, pattern, thickness, and texture. Samples shall be used for a final check of these characteristics with other elements, and for a comparison of the characteristics of the approved sample with those of the actual component as delivered and installed.

The following information shall be submitted with product samples to the extent applicable: Contract number; Project description; generic description of the sample (name or trade reference, type or quality or grade, and any further designation necessary to identify the items or materials); sample source; product name; manufacturer's name; confirmation of availability; and anticipated delivery time.

In conjunction with the submission of physical product samples, a digital photograph of the sample shall be uploaded into ProjectWise.

The Designer will retain one set of the samples, transmit one set of same to the Engineer, and transmit any remaining sets of samples to the Contractor. The Engineer will retain the samples at the Project site for quality comparisons throughout the duration of the Project.
There will be no direct payment for furnishing any product samples, but the cost thereof shall be considered as included in the general cost of the work.

10. Quality Assurance Submittals: When required by the Contract, or when ordered to do so by the Engineer, the Contractor shall prepare and submit quality assurance submittals for review in a PDF file.

Quality assurance submittals consist of qualification data, design data, certifications, manufacturer's instructions, manufacturer's field reports, test reports, Material Safety Data Sheets (MSDSs), and other quality assurance information required by individual Contract provisions.

Where Contract provisions require certification that a product, material, or installation complies with specified requirements, the Contractor shall submit a notarized certification from the manufacturer certifying said compliance. An officer of the manufacturer or other individual authorized to sign documents on behalf of the company shall sign the certification.

Where Contract provisions require the Contractor shall provide a certification letter on the manufacturer's letterhead to certify that asbestos is not contained in the materials. The manufacturer certification letter shall be formatted in the following manner:

[Addressed to:] Commissioner of Transportation
Department of Transportation
P.O. Box 317546
Newington, Connecticut 06131-7546

Project Title and Number

[We] hereby certify that all materials manufactured by [Insert Manufacturer Name] are asbestos-free.

[Signature:] [Name of authorized signatory]
[Title]

Submittals associated with these materials will not be reviewed without the required manufacturer certification letter.

There will be no direct payment for furnishing any quality assurance submittals, but the cost thereof shall be considered as included in the general cost of the work.

11. Submittal Reviewer's Action: The Designer or Engineer will review each submittal, mark each with a uniform, self-explanatory action stamp, and return the stamped submittal promptly to the Contractor. The stamp will be marked as follows to indicate the action taken:

(a) If submittals are marked "No Exceptions Noted," the submittal reviewer has not observed any statement or feature that appears to deviate from the Contract requirements. This disposition is contingent on being able to execute the manufacturer's written warranty in compliance with the Contract provisions.

(b) If submittals are marked "Exceptions as Noted," the considerations or changes noted by the Designer or Engineer are necessary in order for the submittal to comply with Contract requirements. This disposition is contingent on being able to execute the manufacturer's written warranty in compliance with the Contract provisions.

(c) If submittals are marked "Revise and Resubmit," the Contractor shall revise and resubmit the submittal to address the deficiencies or provide additional information requested by the Designer or Engineer.

(d) If submittals are marked "Rejected," the Contractor shall prepare and submit a new submittal in accordance with the Designer's or Engineer's notations.

(e) If submittals are primarily for information or record purposes, the Designer will return the submittal marked "No Action Required." This disposition is contingent on being able to execute the manufacturer's written warranty in compliance with the Contract provisions.

Upon completion of the review, the submittal reviewer will notify the Contractor by e-mail that the submittal dispositions are available in ProjectWise.

The Contractor shall not proceed with the part of the Project covered by the submittal until the submittal is marked "No Exceptions Noted" or "Exceptions as Noted" by the Designer or the Engineer. The Contractor shall retain sole responsibility for compliance with all Contract requirements.

The Contractor shall print 2 copies through ProjectWise of each submittal marked "No Exceptions Noted" or "Exceptions as Noted" to the Assistant District Engineer for use by the Engineer within 7 calendar days of the Contractor's receipt of the submittal reviewer's e-mail. The Contractor shall not perform physical work related to the submittal until the 2 copies are provided to the Assistant District Engineer.

The Contractor shall mark up one set of shop drawings and one set of working drawings and retain them as a "Record Document."

Maintenance manuals and warranties will not be returned unless they are Rejected."

1.20-1.05.05—Cooperation by Contractor:

Add the following after the last paragraph:

"The Contractor shall maintain one binder of all miscellaneous records such as manufacturer startup test reports and inspections by authorities having jurisdiction required by other Contract Provisions (including CSI-formatted Specifications within a particular Special Provision). The miscellaneous records shall be arranged systematically according to the organization of the Contract provisions.

The Contractor shall complete and sign a certification letter assuring the Department that no asbestos-containing materials have been used in the construction of the Project. The Department will not issue the Certificate of Compliance without this completed and signed certification form. The Contractor certification letter shall be formatted in the following manner:

CONTRACTOR CERTIFICATION:
RE/ASBESTOS CONTENT OF MATERIALS

State of Connecticut
Department of Transportation
PO Box 317546
Newington, CT 06131-7546

1. Project Number: _____

2. Project Name: _____

3. Contractor Name: _____

4. This is to certify that I fully understand that it is the requirement of the Connecticut Department of Transportation that only materials that do not contain asbestos of any kind or amount are to be utilized in the construction of this Project.

   I therefore certify that, to the best of my knowledge, all materials installed under this Contract are asbestos-free.

   For the one-year warranty period after the issuance of the Certificate of Compliance, I agree to remove any asbestos-containing material identified by the Connecticut Department of Transportation and reinstall an approved, non-asbestos-containing material that is in compliance with the original Contract at no additional cost to the State.

5. Date of Certificate of Compliance: _____

6. Date of the Asbestos Certification: _____

7. Signature of Authorized Party Agreeing to the Terms & Conditions Identified Herein & as Further Stated in the Contract:

_____	_____
Signature	Title
_____	_____
Printed Name	Date”

1.20-1.05.07—Coordination with Work by Other Parties:

"The Engineer and the Owner will occupy the Project Site during the entire construction period.

The Engineer and the Owner reserve the right to install equipment prior to Final Inspection and the issuance of the Certificate of Compliance provided that such installation does not interfere with the Contractor's completion of their Work.

The Owner and any PURA regulated utility installers reserve the right to perform work in the Communications Room, including the Owner changing locks on the doors, on or about the time the above-ceiling inspection is performed by the Engineer.

Such installations shall not constitute acceptance of the total Project."

1.20-1.05.10—Inspection:

Revise the first sentence of the first paragraph to read:

"For work requiring inspection by a building or fire code official, the Contractor shall:"

1.20-1.05.11—Removal of Defective or Unauthorized Work:

"The Contractor shall remove all materials that have a probability of containing asbestos if they failed to provide the manufacturer certification letter required by Article 1.20-1.05.02 unless a manufacturer certification letter is provided and is acceptable to the Designer.

The Contractor shall remove all asbestos containing material that is found to have been installed.

The Contractor shall replace the removed material with appropriate material. The Contractor shall pay for any asbestos testing charges the Department incurred in order to prove that the material contains asbestos fibers. This obligation will extend throughout the one year warranty period after the issuance of the Certificate of Compliance."
Delete Article 1.20-1.05.23 and replace it with the following:

"1.20-1.05.23— Requests for Information (RFI's) and Requests for Change (RFC's):

The Contractor shall forward all RFIs and RFCs to the Engineer by in PDF format for review. The Engineer will forward the RFI or RFC to the Designer for review. Upon receipt of an RFI or RFC, the Designer will attempt to determine if additional information is required from the Contractor to respond to the RFI or RFC, and request said information from the Engineer.

All other RFI's will be responded to within 10 calendar days of receipt by the Designer. All other RFC's will be responded to within 21 calendar days of receipt by the Designer."

1.20-1.05.24—Project Meetings:

Add the following:

"5. Project Closeout Meeting: The Engineer will conduct a Project closeout meeting no later than 90 days prior to the anticipated expiration of Contract time to review the requirements and responsibilities related to Project closeout.

The Engineer, Designer, Owner, the Contractor and its project coordinator or superintendent, major subcontractors, and other concerned parties shall attend the meeting. All participants at the meeting shall be familiar with Project and authorized to conclude matters relating to the Work.

The meeting participants shall discuss items of significance that could affect or delay Project closeout, including the following: (1) preparation of record documents; (2) procedures required prior to inspection for Substantial Completion and for final inspection for acceptance; (3) submittal of written warranties; (4) requirements for preparing operations and maintenance data; (5) requirements for delivery of spare parts; (6) requirements for demonstration and training; (7) submittal procedures; (8) coordination of separate contracts or work to be performed by others; (9) Owner's partial occupancy requirements; (10) installation of Owner's furniture, fixtures, and equipment; and (11) responsibility for removing temporary facilities and controls.

The Engineer will record meeting results and distribute copies to everyone in attendance, the Designer, and to the Contractor to be distributed to others affected by decisions or actions resulting from the meeting."

Add new Article 1.20-1.05.25:
"1.20-1.05.25 – Project Superintendent: The Project Superintendent shall be an administrative employee of the Contractor or a Consultant hired by the Contractor to coordinate and expedite all phases of the work on a full-time daily basis, including associated project trades, on the Project Site.

The Contractor shall submit a written resume of the proposed Project Superintendent within 7 calendar days of the award of the Contract for the Department's acceptance. This resume shall demonstrate their superintendent work experience on a minimum of 2 projects of this type, scale, and complexity of this project.

At any time during the project, the Department may ask for any reason that the Project Superintendent be replaced. If the Department directs this action, the Contractor shall submit a written resume for a new Project Superintendent with the intent that this individual be in place on the project within 30 calendar days of their acceptance by the Department. During this time, the duties of the Project Superintendent shall be performed by the Project Coordinator. If there is no Project Coordinator on the project, the Department may allow the original Project Superintendent to remain until the new Project Superintendent begins. The original Project Superintendent may still work on the project in another capacity at the discretion of the Contractor.

The Project Superintendent shall be on the Project Site whenever project work is being performed. The Project Superintendent shall (1) attend all meetings between the Contractor and the Department, the Contractor and its subcontractors, and any other meetings that affect the progress of the project; (2) be knowledgeable of the status of all parts of the work throughout the duration of the project; (3) coordinate the activities of the subcontractors; (4) maintain the construction schedule; (5) be the Contractor's quality assurance/quality control representative; (6) prepare Daily Construction Reports in accordance with Article 1.20-1.05.08; and (7) prepare or approve the Biweekly Schedules required to be submitted by the Contractor in Article 1.05.08."

1.20-1.06.03—Storage:

Add the following as a new second paragraph:

"Off-site staging and storage of materials and equipment may be required due to restrictive Project Limits and other operational constraints. Arrangement for off-site staging and storage of materials and equipment shall be the responsibility of the Contractor. Payment for off-site staging and storage of materials and equipment shall be in accordance with Article 1.09.06."

1.20-1.06.25—Product Selection:

Add the following as the last sentence of the first paragraph:

"Descriptive, performance, and reference standard requirements in the Contract provisions establish salient characteristics of products."

Replace (g) with the following:

"(g) Visual Selection: When a Contractual product requirement includes the phrase "...as selected by the Designer from manufacturer's full range ..." or a similar phrase, the Contractor shall select a product line that complies with Contract requirements. The Designer will select the color, gloss, pattern, density, or and texture from the product line that includes both standard and premium items. Bids will be based on premium items."

Add (h) after (g):

"(h) Basis-of-Design Product Specification: A specification in which a specific manufacturer's product is named and accompanied by the words "basis-of-design," including make or model number or other designation, to establish the significant qualities related to type, function, dimension, in-service performance, physical properties, appearance, and other characteristics for purposes of evaluating comparable products of additional manufacturers."

1.20-1.07.02—Permits and Licenses:

"The Contractor will not be required to apply for a Building Permit from the local Building Official since the state will issue a Notice of Intent to Construct (NOIC) as the Building Permit.

The Contractor shall apply for and obtain a demolition permit from the municipality for each building to be demolished prior to initiating any demolition activities in accordance with CGS 29-401 through 29-415. Said statutes permit a waiting period from the demolition permit application to approval of not more than 90 days so the Contractor shall schedule its work accordingly.

The Contractor shall apply for and obtain the necessary permits related to the installation of wells and septic systems."

1.20-1.07.10 - Contractor's Duty to Indemnify the State against Claims for Injury or Damage:

Add the following after the only paragraph:

"It is further understood and agreed by the parties hereto, that the Contractor shall not use the defense of Sovereign Immunity in the adjustment of claims or in the defense of any suit, including any suit between the State and the Contractor, unless requested to do so by the State."

1.20-1.08.01--Transfer of Work or Contract:

In the first sentence of the first paragraph of 1.08.01 which reads: "The Contractor shall perform . . . total Contract value.", replace "50%" with "25%."

1.20-1.08.02—Establishment of Construction Field Office:

Delete the second paragraph.

1.20-1.08.04—Limitation of Operations:

"The Contractor shall repair at its own expense any and all damage caused by construction operations to existing buildings unless said damage is scheduled as part of the Project work. The Contractor shall take all precautions necessary to protect the building and its occupants during the construction period. Access to the existing building for purposes of demolition work will not be granted until Final Inspection of the temporary facilities has been completed and the temporary facilities are capable of being occupied by the Department without deterring the Department's employees from performing their assigned work.

Department personnel will occupy the Maintenance Facility, and the existing site weekdays between the hours of 6 a.m. and 4 p.m. as well as at all times during winter storms. The Contractor shall not interfere with the Department's employee's performance of their assigned work.

During all times that the Project Site is occupied by state personnel, the Contractor shall maintain the following systems to the extent described to permit Department operations:

1. Glastonbury Maintenance Facility Unleaded and Diesel Fuel: State personnel will have access to permanent or temporary unleaded and diesel fuel at all times.

2. Glastonbury Maintenance Facility Fuel Oil System and Heating System: From October 1 to April 1 of the following year, no work related to the fuel oil system and heating system shall be permitted. The Contractor shall remove the salvable product from the fuel oil underground storage tank and transport the said product to Department designated sites within 50 miles.

3. Glastonbury Maintenance Facility Tank Monitoring System: The existing tank monitoring system portion that monitors the existing oil-water separator shall be kept fully operational at all times. An outage of the existing tank monitoring system is only permitted under the following conditions:

    a. Notify Engineer no fewer than two days in advance of proposed interruption of the existing tank monitoring system.
    b. The maximum allowable interruption shall be a 6-hour period.
    c. Coordinate with Engineer and Department personnel that no vehicles are allowed in the facility bay areas.

4. Hartford Maintenance Facility Tank Monitoring System: The existing tank monitoring system portion that monitors the existing oil-water separator shall be kept fully operational at all times. An outage of the existing tank monitoring system is only permitted under the following conditions:

    a. Notify Engineer no fewer than two days in advance of proposed interruption of the existing tank monitoring system.
    b. The maximum allowable interruption shall be a 6-hour period.
    c. Coordinate with Engineer and Department personnel that no vehicles are allowed in the facility bay areas.

The Contractor shall perform the following Project work when the existing office building is unoccupied (between the hours of 4 p.m. and 6.a.m. or on weekends) to minimize the impacts to the occupants, unless otherwise approved by the Engineer:

1. Glastonbury Maintenance Facility Domestic Hot Water Systems: Domestic hot water system outage as required for replacement of the existing fuel-oil fired water heater with the natural gas fired water heater.

1.20-1.08.05--Workmen and Equipment:

Add the following after (b):

"(c) The Contractor shall install a filter with a minimum MERV rating of 10 at each return air grille in the permanent HVAC system if the Engineer authorizes the use of the permanent HVAC system for temporary use during construction. The Contractor shall remove the filters prior to the Semi-Final Inspection."

1.20-1.08.07 - Determination of Contract Time:

Delete the second, third, and fourth paragraphs of 1.08.07 and replace with the following:

"When the Contract time is stated on a calendar-day basis, that time shall be the number of consecutive calendar days contained in the Contract period designated in the Contract, INCLUDING the time period from each December 1 through the following March 31. The Contract time will begin to run on the date designated in the Engineer's "Notice to Proceed" as the date for commencement of the Project, and the time will be computed as herein provided on a consecutive-day basis, including all Saturdays, Sundays, holidays, and non-work days."

1.20-1.08.08--Extension of Time:

Delete the last paragraph of 1.08.08 ("If an approved extension . . . until the following April 1.").

1.20-1.08.09--Failure to Complete Work on Time:

Delete the second paragraph of 1.08.09 ("If the last day of the initial . . . the Project is completed"), and replace with the following:

"Liquidated damages as specified in the Contract shall be assessed against the Contractor per calendar day from that day until the date on which the Project is substantially completed."

Delete Article 1.20-1.08.12 and replace with the following:

"1.20-1.08.12--Semi-Final, Substantial Completion, and Final Inspections:

1. Semi-Final Inspection: If the Contractor has installed the permanent electrical service and completed all physical work, a Semi-Final Inspection will be scheduled as soon as practical after the Contractor submits the following: (1) Record Drawings, Record Specifications, miscellaneous records, and Contractor Asbestos Certification Letter as referenced in Article 1.20-1.05.05; (2) final survey; (3) preliminary test/adjust/balance records including the air and water balance report; (4) one draft copy of all Operation and Maintenance Manuals as referenced in Article 1.20-1.08.14; (5) a list of all required training along with the entities who will provide the training and estimated time frames for each session; (6) a list of all spare parts and salvage materials to be turned over to the Owner, and (7) account numbers and copies of latest bills from each utility.

The Engineer, Designer, Building and Fire Code Officials, and the Owner will conduct an inspection to prepare a "Punch List" of unfulfilled, substandard, or incomplete items. During this inspection, the Contractor shall have all technicians necessary to demonstrate the complete operation of all systems on site. Examples of such systems include, but are not limited to, the following: boiler, HVAC, fire alarm, and building automation. Results of the completed inspection will form the basis of requirements for the Substantial Completion Inspection. The Engineer reserves the right to issue the C.O.C. after the Semi-Final Inspection if the requirements of the Substantial Completion Inspection are met and there are no Building Code or Fire Code compliance issues or any major "Punch List" items that would adversely affect the tenants of the facility after moving in. The Engineer will advise the Contractor of the construction that shall be completed before the issuance of the C.O.C.

2. Substantial Completion Inspection: Before requesting a Substantial Completion Inspection for the issuance of the C.O.C, the Contractor shall complete all items listed on the Engineer's Semi-Final Inspection "Punch List." If the Engineer determines that the "Punch List" is complete, a Substantial Completion Inspection will be scheduled as soon as practical after the Contractor submits the following: (1) final test/adjust/balance records including the air and water balance report; (2) final copies of Operation and Maintenance Manuals as referenced in Article 1.20-1.08.14; (3) executed warranties as referenced in Article 1.20-1.06.08; (4) maintenance service agreements; (5) final construction photographs; (6) final meter readings for all utilities; and the Contractor (1) completes final cleaning requirements and touch up painting; (2) delivers all spare parts and salvage materials to the Engineer; and (3) completes all training of the Owner's personnel. The Engineer and code officials will conduct the inspection. During this inspection, the Contractor shall have all technicians necessary to demonstrate the complete operation of all systems on-site if requested by the Engineer. The Engineer will advise the Contractor of the construction that is required to be completed.

3. Final Completion Inspection: The Engineer will schedule a Final Completion Inspection one year after the issuance of the C.O.C. for "Relief of Responsibility," notwithstanding any warranty obligations, only after the Engineer determines that the Contractor has satisfactorily: (1) completed follow up door hardware adjusting; (2) completed subsequent season air and water balancing; (3) resolved warrantee issues; (4) completed miscellaneous follow up testing; and (5) completed landscaping requirements.

1.20-1.08.14--Acceptance of Project:

Under subsection 2. Operation and Maintenance Manuals add the following as (j):

"(j) Provide estimated life cycle costs to maintain each product included in the manual to reach maximum useful life (i.e. annual, mid-life overhaul, end of life overhaul, or programmed interval replacement)."

Delete subsection 3. Training and replace with the following:

"**3. Training:** The Contractor shall use experienced instructors thoroughly trained and

experienced in operation and maintenance of Project equipment and systems, in order to instruct the Owner's operation and maintenance personnel.

The Contractor shall develop a training schedule for approval by the Engineer, the Owner, and the Commissioning Authority when applicable that is coordinated with the Owner's operations and working hours. This schedule shall be submitted a minimum of 30 calendar days in advance of the start of training.

The Contractor shall (1) arrange for each installer of equipment that requires regular maintenance to meet with the Owner in order to provide instruction in the proper operation and maintenance of any equipment that requires regular maintenance, (2) provide instruction by manufacturer's representatives if installers are not experienced in any relevant procedures, (3) provide instruction at agreed-upon times, and (4) provide Engineer with a minimum of 72 hours advance notice of the training sessions.

The Contractor shall provide a syllabus prior to the training to ensure that the appropriate Owner's operation and maintenance personnel are in attendance.

The Contractor shall submit to the Engineer for approval, a qualified commercial videographer to videotape the training sessions. The videographer shall be a firm or an individual of established reputation that has been regularly engaged as a professional videographer for not less than 3 years.

The Contractor shall video record each training session and provide said video in DVD format to the Engineer for the Owner's future use. Two DVD's of all training sessions shall be turned over to the Owner through the Engineer. The videographer shall transfer copyright usage rights to the Owner for unlimited reproduction."

1.20-1.09.00—Unit Price Items, Lump Sum Items, Major Lump Sum Items:

"Facilities Construction projects are bid with both lump sum and unit price items which are in addition to the Major Lump Sum Item (MLSI) of the Project. These separate items will be measured for payment on a unit price or lump sum basis (whichever is applicable) for which a separate bid price is required, at the quantities indicated in the Bid Proposal Form. Each item to be measured is more specifically described in a corresponding Standard Specification or a special provision.

Standard Items are referenced by their item numbers; refer to the applicable article for the requirements for this item. Special provisions are referenced by their item number followed by an "A" suffix; refer to the special provisions for requirements for this item.

All work depicted on the Contract Plans and described in the Contract Specifications, including mobilization and project closeout, is included in the MLSI of the Project, with the exception of the unit price or other lump sum items listed in the Bid Proposal Form. Any work incidental to

an item which is not specifically described or included in the item, but which is required for performance and completion of the work required under the Contract, is included in the MLSI."

ON-THE-JOB TRAINING (OJT) WORKFORCE DEVELOPMENT PILOT:

Description

To provide construction industry related job opportunities to minorities, women and economically disadvantaged individuals; and to increase the likelihood of a diverse and inclusive workforce on Connecticut Department of Transportation (ConnDOT) projects.

All contractors (existing and newcomers) will be automatically placed in the Workforce Development Pilot. Standard OJT requirements typically associated with individual projects will no longer be applied at the project level for new projects. Instead, these requirements will be applicable on an annual basis for each contractor performing work on ConnDOT projects.

The OJT Workforce Development Pilot will allow a contractor to train employees on Federal, State and privately funded projects located in Connecticut. However, contractors should give priority to training employees on ConnDOT Federal-Aid funded projects.

Funding

The Department will establish an OJT fund annually from which contractors may bill the Department directly for eligible trainee hours. The funds for payment of trainee hours on federal-aid projects will be allocated from the ½ of 1% provided for OJT funding, and will be based on hours trained, not to exceed a maximum of $25,000.00 per year; per contractor.

Minorities and Women

Developing, training and upgrading of minorities, women and economically disadvantaged individuals toward journeyperson level status is the primary objective of this special training provision. Accordingly, the Contractor shall make every effort to enroll minority, women and economically disadvantaged individuals as trainees to the extent that such persons are available within a reasonable area of recruitment. This training commitment is not intended, and shall not be used, to discriminate against any applicant for training whether a member of a minority group or not.

Assigning Training Goals

The Department, through the OJT Program Coordinator, will assign training goals for a calendar year based on the contractor's past two year's activities and the contractor's anticipated upcoming year's activity with the Department. At the beginning of each year, all contractors eligible will be contacted by the Department to determine the number of trainees that will be assigned for the upcoming calendar year. At that time, the Contractor shall enter into an agreement with the Department to provide a self-imposed on-the-job training program for the calendar year. This agreement will include a specific number of annual training goals agreed to by both parties. The number of training assignments may range from one (1) to six (6) per

contractor per calendar year. Each January, a summary of the trainees required and the OJT Workforce Development Pilot package will be sent to participating contractors. The number of trainees assigned to each contractor in the summary will increase proportionately not to exceed 6, as shown in the following table. This package will also be provided to contractors as they become newly eligible for the OJT Workforce Development Pilot throughout the remainder of the year. Projects awarded after September 30 will be included in the following year's Program.

The dollar thresholds for training assignments are as follows:

$4.5 – 8 million=	1 trainee
$ 9 – 15 million=	2 trainees
$16 – 23 million=	3 trainees
$24 – 30 million=	4 trainees
$31 – 40 million=	5 trainees
$41 – and above=	6 trainees

Training Classifications

Preference shall be given to providing training in the following skilled work classifications. However, the classifications established are not all-inclusive:

Equipment Operators	Electricians
Laborers	Painters
Carpenters	Iron / Reinforcing Steel Workers
Concrete Finishers	Mechanics
Pipe Layers	Welders

The Department has on file common training classifications and their respective training requirements; that may be used by the contractors. Contractors shall submit new classifications for specific job functions that their employees are performing. The Department will review and recommend for acceptance the new classifications proposed by contractors, if applicable. New classifications shall meet the following requirements:

Proposed training classifications are reasonable and realistic based on the job skill classification needs, and the number of training hours specified in the training classification is consistent with common practices and provides enough time for the trainee to obtain journeyman level status.

Where feasible, 25% percent of apprentices or trainees in each occupation shall be in their first year of apprenticeship or training. The number of trainees shall be distributed among the work classifications on the basis of the contractor's needs and the availability of journeymen in the various classifications within a reasonable area of recruitment.

No employee shall be employed as a trainee in any classification in which they have successfully completed a training course leading to journeyman level status or in which they have been employed as a journeyman.

Records and Reports

The Contractor shall maintain enrollment in the program and submit all required reports documenting company compliance under these contract requirements. These documents and any other information shall be submitted to the OJT Program Coordinator as requested.

Upon the trainee's completion and graduation from the program, the Contractor shall provide each trainee with a certification Certificate showing the type and length of training satisfactorily completed.

Trainee Interviews

In order to determine the continued effectiveness of the OJT Program in Connecticut, the department will periodically conduct personal interviews with current trainees and may survey recent graduates of the program. This enables the OJT Program Coordinator to modify and improve the program as necessary. Trainee interviews are generally conducted at the job site to ensure that the trainees' work and training is consistent with the approved training program.

Trainee Wages

Contractors shall compensate trainees on a graduating pay scale based upon a percentage of the prevailing minimum journeyman wages (Davis-Bacon Act). Minimum pay shall be as follows:

60 percent	of the journeyman wage for the first half of the training period
75 percent	of the journeyman wage for the third quarter of the training period
90 percent	of the journeyman wage for the last quarter of the training period

In no case, will the trainee be paid less than the prevailing rate for general laborer as shown in the contract wage decision (must be approved by the Department of Labor).

Achieving or Failing to Meet Training Goals

The Contractor will be credited for each trainee currently enrolled or who becomes enrolled in the approved training program and providing they receive the required training under the specific training program. Trainees will be allowed to be transferred between projects if required by the Contractor's schedule and workload. The OJT Program Coordinator must be notified of transfers within five (5) days of the transfer or reassignments by e-mail (Phylisha.Coles@ct.gov).

Where a contractor does not or cannot achieve its annual training goal with female or minority trainees, they must produce adequate Good Faith Efforts documentation. Good Faith Efforts are those designed to achieve equal opportunity through positive, aggressive, and continuous result-oriented measures. 23 CFR § 230.409(g) (4). Contractors should request minorities and females from unions when minorities and females are under-represented in the contractor's workforce.

Whenever a contractor requests ConnDOT approval of someone other than a minority or female, the contractor must submit documented evidence of its Good Faith Efforts to fill that position with a minority or female. When a non-minority male is accepted, a contractor must continue to attempt to meet its remaining annual training goals with females and minorities.

Where a contractor has neither attained its goal nor submitted adequate Good Faith Efforts documentation, ConnDOT will issue a letter of non-compliance. Within thirty (30) days of receiving the letter of non-compliance, the contractor must submit a written Corrective Action Plan (CAP) outlining the steps that it will take to remedy the non-compliance. The CAP must be approved by ConnDOT. Failure to comply with the CAP may result in your firm being found non-responsive for future projects.

Measurement and Payment

Optional reimbursement will be made to the contractor for providing the required training under this special provision on ConnDOT Federal-Aid funded projects only.

Contractor will be reimbursed at $0.80 for each hour of training given to an employee in accordance with an approved training or apprenticeship program. This reimbursement will be made even though the Contractor receives additional training program funds from other sources, provided such other source does not specifically prohibit the contractor from receiving other reimbursement.

Reimbursement for training is made annually or upon the trainees completion and not on a monthly basis. No payment shall be made to the Contractor if either the failure to provide the required training, or the failure to hire the trainee as a journeyperson, is caused by the Contractor.

Program reimbursements will be made directly to the prime contractor on an annual basis. To request reimbursement, prime contractors must complete the Voucher for OJT Workforce Development Pilot Hourly Reimbursement for each trainee in the OJT Program. This form is included in the OJT Workforce Development Pilot package and is available on the Department's web site at:

www.ct.gov/dot

The completed form must be submitted to the Office of Contract Compliance for approval. The form is due on the 15th day of January for each trainee currently enrolled and for hours worked on ConnDOT Federal-Aid funded projects only.

SMALL CONTRACTOR AND SMALL CONTRACTOR MINORITY BUSINESS ENTERPRISES (SET-ASIDE)

March, 2001

NOTE: Certain of the requirements and procedures stated in this "Special Provision" are applicable prior to the execution of the Contract.

I. GENERAL

A. The Contractor shall cooperate with the Connecticut Department of Transportation (CONNDOT) in implementing the required contract obligations concerning "Small Contractor" and "Small Contractor Minority Business Enterprise" use on this Contract in accordance with Section 4a-60g of the Connecticut General Statutes as revised. References, throughout this "Special Provision", to "Small Contractors" are also implied references to "Small Contractor Minority Business Enterprises" as both relate to Section IIA of these provisions. The Contractor shall also cooperate with CONNDOT in reviewing the Contractor's activities relating to this provision. This "Special Provision" is in addition to all other equal opportunity employment requirements of this Contract.

B. For the purpose of this "Special Provision", the "Small Contractor(s)" and "Minority Business Enterprise(s)" named to satisfy the set-aside requirement must be certified by the Department of Administrative Services, Business Connections/ Set-Aside Unit [(860) 713-5236 www.das.state.ct.us/busopp.htm] as a "Small Contractor" and "Minority Business Enterprises" as defined by Section 4a-60g Subsections (1) and (3) of the Connecticut General Statutes as revised and is subject to approval by CONNDOT to do the work for which it is nominated pursuant to the criteria stipulated in Section IIC-3.

C. Contractors who allow work which they have designated for "Small Contractor" participation in the pre-award submission required under Section IIC to be performed by other than the approved "Small Contractor" organization and prior to concurrence by CONNDOT, will not be paid for the value of the work performed by organizations other than the "Small Contractor" designated.

D. If the Contractor is unable to achieve the specified contract goals for "Small Contractor" participation, the Contractor shall submit written documentation to CONNDOT's Manager of Construction Operations indicating his/her good faith efforts to satisfy goal requirements. Documentation is to include but not be limited to the following:

1. A detailed statement of the efforts made to select additional subcontract opportunities for work to be performed by each "Small Contractor" in order to increase the likelihood of achieving the stated goal.

2. A detailed statement, including documentation of the efforts made to contact and solicit contracts with each "Small Contractor", including the names, addresses, dates and telephone numbers of each "Small Contractor" contacted, and a description of the information provided to each "Small Contractor" regarding the scope of services and anticipated time schedule of items proposed to be subcontracted and the nature of response from firms contacted.

3. For each "Small Contractor" that placed a subcontract quotation which the Contractor considered not to be acceptable, provide a detailed statement of the reasons for this conclusion.

4. Documents to support contacts made with CONNDOT requesting assistance in satisfying the contract specified or adjusted "Small Contractor" dollar requirements.

5. Document other special efforts undertaken by the Contractor to meet the defined goal.

E. Failure of the Contractor to have at least the specified dollar amount of this contract performed by "Small Contractor" as required in Section IIA of this "Special Provision" will result in the reduction in contract payment to the Contractor by an amount equivalent to that determined by subtracting from the specific dollar amount required in Section IIA, the dollar payments for the work actually performed by each "Small Contractor". The deficiency in "Small Contractor" achievement, will therefore, be deducted from the final contract payment. However, in instances where the Contractor can adequately document or substantiate its good faith efforts made to meet the specified or adjusted dollar amount to the satisfaction of CONNDOT, no reduction in payments will be imposed.

F. All records must be retained for a period of three (3) years following completion of the contract and shall be available at reasonable times and places for inspection by authorized representatives of CONNDOT.

G. Nothing contained herein, is intended to relieve any contractor or subcontractor or material supplier or manufacturer from compliance with all applicable Federal and State legislation or provisions concerning equal employment opportunity, affirmative action, nondiscrimination and related subjects during the term of this Contract.

II. **SPECIFIC REQUIREMENTS**

In order to increase the participation of "Small Contractors", CONNDOT requires the following:

A. Not less than **25** (%) percent of the **final** value of this Contract shall be subcontracted to and performed by, and/or supplied by, manufactured by and paid to "Small Contractors" and/or "Small Contractors Minority Business Enterprises".

If the above percentage is zero (0%) AND an asterisk (*) has been entered in the adjacent brackets [ ], this Contract is 100% solely set-aside for participation by "Small Contractors" and/or "Small Contractors Minority Business Enterprises".

B. The Contractor shall assure that each "Small Contractor" will have an equitable opportunity to compete under this "Special Provision", particularly by arranging solicitations, time for the preparation of Quotes, Scope of Work, and Delivery Schedules so as to facilitate the participation of each "Small Contractor".

C. The Contractor shall provide to CONNDOT's Manager of Contracts within Seven (7) days after the bid opening the following items:

1. An affidavit (Exhibit I) completed by each named "Small Contractor" subcontractor listing a description of the work and indicating the dollar amount of all contract(s) and/or subcontract(s) that have been awarded to him/her for the current State Fiscal Year (July 1 - June 30) does not exceed the Fiscal Year limit of $10,000,000.00.

2. A certification of work to be subcontracted (Exhibit II) signed by both the Contractor and the "Small Contractor" listing the work items and the dollar value of the items that the nominated "Small Contractor" is to perform on the project to achieve the minimum percentage indicated in Section IIA above.

3. A certification of past experience (Exhibit III) indicating the scope of work the nominated "Small Contractor" has performed on all projects, public and private, for the past two (2) years.

4. In instances where a change from the originally approved named "Small Contractor" (see Section IB) is proposed, the Contractor is required to submit, in a reasonable and expeditious manner, a revised submission, comprised of the documentation required in Section IIC, Paragraphs 1, 2 and 3 and Section E together with documentation to substantiate and

justify the change, (i.e., documentation to provide a basis for the change) to CONNDOT's Manager of Construction Operations for its review and approval prior to the implementation of the change. The Contractor must demonstrate that the originally named "Small Contractor" is unable to perform in conformity to specifications, or unwilling to perform, or is in default of its contract, or is overextended on other jobs. The Contractor's ability to negotiate a more advantageous contract with another "Small Contractor" is not a valid basis for change. Documentation shall include a letter of release from the originally named "Small Contractor" indicating the reason(s) for the release.

D. After the Contractor signs the Contract, the Contractor will be required to meet with CONNDOT's Manager of Construction Operations or his/her designee to review the following:

1. What is expected with respect to the "Small Contractor" set aside requirements.

2. Failure to comply with and meet the requirement can and will result in monetary deductions from payment.

3. Each quarter after the start of the "Small Contractor" the Contractor shall submit a report to CONNDOT's Manager of Construction Operations indicating the work done by, and the dollars paid to each "Small Contractor" to date.

4. What is required when a request to sublet to a "Small Contractor" is submitted.

E. The Contractor shall submit to CONNDOT's Manager of Construction Operations all requests for subcontractor approvals on standard forms provided by the Department.

If the request for approval is for a "Small Contractor" subcontractor for the purpose of meeting the contract required "Small Contractor" percentage stipulated in Section IIA, a copy of the legal contract between the Contractor and the "Small Contractor" subcontractor must also be submitted at the same time. Any subsequent amendments or modifications of the contract between the Contractor and the "Small Contractor" subcontractor must also be submitted to CONNDOT's Manager of Construction Operations with an explanation of the change(s). The contract must show items of work to be performed, unit prices and, if a partial item, the work involved by both parties.

In addition, the following documents are to be attached:

(1) A statement explaining any method or arrangement for renting equipment. If rental is from a Contractor, a copy of Rental Agreement must be submitted.

(2) A statement addressing any special arrangements for manpower.

(3) A statement addressing who will purchase material.

F. Contractors subcontracting with a "Small Contractor" to perform work or services as required by this "Special Provision" shall not terminate such firms without advising CONNDOT, in writing, and providing adequate documentation to substantiate the reasons for termination if the designated "Small Contractor" firm has not started or completed the work or the services for which it has been contracted to perform.

G. Material Suppliers or Manufacturers

If the Contractor elects to utilize a "Small Contractor" supplier or manufacturer to satisfy a portion or all of the specified dollar requirements, the Contractor must provide the Department with:

1. An executed Affidavit Small Contractor (Set-Aside) Connecticut Department of Transportation Affidavit Supplier or Manufacturer (sample attached), and

2. Substantiation of payments made to the supplier or manufacturer for materials used on the project.

Brokers and packagers shall not be regarded as material Suppliers or manufacturer.

H. Non-Manufacturing or Non-Supplier "Small Contractor" Credit

Contractors may count towards its "Small Contractor" goals the following expenditures with "Small Contractor" firms that are not manufacturers or suppliers:

1. Reasonable fees or commissions charged for providing a bona fide service such as professional, technical, consultant or managerial services and assistance in the procurement of essential personnel, facilities, equipment, material or supplies necessary for the performance of the contract provided that the fee or commission is determined by the Department of Transportation to be reasonable and consistent with fees customarily allowed for similar services.

2. The fees charged for delivery of materials and supplies required on a job site (but not the cost of the materials and supplies themselves) when the hauler, trucker, or delivery service is not also the manufacturer of or a regular dealer in the materials and supplies, provided that the fee is determined by the Department of Transportation to be reasonable and not excessive as compared with fees customarily allowed for similar services.

3. The fees or commissions charged for providing any bonds or insurance specifically required for the performance of the Contract, provided that the fee or commission is determined by the Department of Transportation to be reasonable and not excessive as compared with fees customarily allowed for similar services.

III. **BROKERING**

For the purpose of this "Special Provision", a "Broker" is one who acts as an agent for others in negotiating contracts, purchases, sales, etc., in return for a fee or commission. Brokering of work by a "Small Contractor" is not allowed and is a contract violation.

IV. **PRE-AWARD WAIVERS:**

If the Contractor's submission of the "Small Contractor" listing, as required by Section IIC indicates that it is unable, by subcontracting to obtain commitments which at least equal the amount required by Section IIA, it may request, in writing, a waiver of up to 50% of the amount required by Section IIA. To obtain such a waiver, the Contractor must submit a completed "Application for Waiver of Small Contractor Minority Business Enterprise Goals" to CONNDOT's Manager of Contracts which must also contain the following documentation:

1. Information described in Section ID.

2. For each "Small Contractor" contacted but unavailable, a statement from each "Small Contractor" confirming its unavailability.

Upon receipt of the submission requesting a waiver, the CONNDOT's Manager of Contracts shall submit the documentation to the Director of the Office of Contract Compliance who shall review it for completeness. After completion of the Director of Contract Compliance's review, she/he should write a narrative of his/her findings of the application for a waiver, which is to include his/her recommendation. The Director of Contract Compliance shall submit the written narrative to the Chairperson of the DBE Screening Committee at least five (5) working days before the scheduled meeting. The Contractor shall be invited to attend the meeting and present his/her position. The DBE Screening Committee shall render a decision on the waiver request within five (5)

working days after the meeting. The DBE Screening Committee's decision shall be final. Waiver applications are available from the CONNDOT Manager of Contracts.

EXHIBIT I Mar. 01

SMALL CONTRACTOR/*MINORITY BUSINESS ENTERPRISE
(* Delete if not Applicable)
SET-ASIDE PROGRAM
(QUALIFICATION AFFIDAVIT)

PROJECT(s) _____
(INCLUDING TOWN & DESCRIPTION)

STATE OF _____CONNECTICUT_____

COUNTY OF_____

I_____,ACTING IN BEHALF
NAME OF PARTY SIGNING AFFIDAVIT
OF_____,DO HEREBY CERTIFY
PERSON FIRM OR ORGANIZATION
AND AFFIRM THAT THE INFORMATION SET FORTH BELOW IS TRUE AND ACCURATE TO THE BEST OF MY KNOWLEDGE. AS OF THIS DATE_____THE LIST OF SMALL CONTRACTOR SET-ASIDE PROGRAM - CONTRACTS AND/OR SUBCONTRACTS AWARDED DURING THE CURRENT FISCAL YEAR (JULY 1 - JUNE 30) 20_____ IS AS FOLLOWS:

Col. 1 TOWN AND PROJECT NUMBER	Col. 2 STATE AGENCY WHICH AWARDED CONTRACT	Col. 3 CONTRACT AMOUNT AWARDED UNDER THIS PROGRAM	Col. 4 AMOUNT OF WORK SUBCONTRACTED FROM OTHER FIRMS UNDER THIS PROGRAM	Col. 5 TOTAL AMOUNT OF ALL WORK UNDER THIS PROGRAM Col. 3 Plus Col. 4
	TOTALS	$	$	$

_____
NAME OF PERSON, FIRM OR ORGANIZATION

(FIRM SEAL)

_____
SIGNATURE & TITLE OF OFFICIAL

SWORN TO AND SUBSCRIBED BEFORE ME BY_____

WHO IS PERSONALLY KNOWN TO ME, THIS_____DAY OF_____, 20_____

_____
(NOTARY PUBLIC)

MY COMMISSION EXPIRES_____SEAL

PLEASE NOTE THAT ALL THE WORK AWARDED OR SUBCONTRACTED TO YOUR FIRM UNDER THE SET-ASIDE PROGRAM IN A FISCAL YEAR (JULY 1-JUNE 30) INCLUDING THIS PROJECT, CANNOT BE MORE THAN $10,000,000.00

GENERAL

Mar.01

EXHIBIT II

DEPARTMENT OF TRANSPORTATION
CONTRACT DIVISION
2800 BERLIN TURNPIKE
NEWINGTON, CT 06111

CERTIFICATION OF WORK TO BE SUBCONTRACTED
NOMINATED SMALL CONTRACTOR/*MINORITY BUSINESS ENTERPRISE

* Delete if not applicable

PLEASE INCLUDE A COPY OF CERTIFICATION LETTER

CONTRACTOR_____

ADDRESS_____

TOWN_____PROJECT NO._____

DESCRIPTION OF PROJECT_____

_____

CONTRACT BID AMOUNT $_____

DATE_____

Listed below is the Nominated Small Contractor/Minority Business Enterprise for the above project and the requested data:

Name, Address & Tel No. of the Nominated Firm	ITEM(s)NUMBER(s) and Description of the Item(s) to be performed by and paid to the Subcontractor	Quantities (indicate if partial)	Prime's Bid Amount For Item	Dollar Amount Subcontracted	Small Business Set-Aside Dollar Requirement

Signed By _____
Small Contractor/*Minority Business Enterprise
(Subcontractor)

Signed By_____
Contractor

Title_____

EXHIBIT III

Mar.01

CERTIFICATION
PAST CONSTRUCTION EXPERIENCE

SMALL CONTRACTOR / * MINORITY BUSINESS ENTERPRISES

* Delete if not applicable

PLEASE LIST ALL CONSTRUCTION PROJECTS YOUR ORGANIZATION HAS WORKED ON IN THE PAST TWO FISCAL YEARS

PROJECT LOCATION NUMBER AND DESCRIPTION APPLICABLE	CONTRACT AMOUNT	IF WORK PERFORMED AS PRIME GIVE OWNERS NAME IF WORK PERFORMED AS SUBCONTRACTOR GIVE CONTRACTORS NAME	START DATE	ACTUAL OR ESTIMATED COMPLETION DATE	NAME AND PHONE OF OWNER OR PRIME CONTRACTOR AS

SIGNED BY: _____

SMALL BUSINESS CONTRACTOR
*MINORITY BUSINESS ENTERPRISES

D.O.T. PROJECT NO. _____

* Delete if not applicable

MARCH, 2001

SMALL CONTRACTOR/SMALL CONTRACTOR MINORITY BUSINESS ENTERPRISE (MBE) (SET-ASIDE) CONNECTICUT DEPARTMENT OF TRANSPORTATION AFFIDAVIT – SUPPLIER OR MANUFACTURER

This affidavit must be completed by the State Contractor's designated Small Contractor/ Small Contractor Minority Business Enterprise (MBE), notarized and attached to the contractor's request to utilize a Small Contractor/Small Contractor Minority Business Enterprise (MBE) supplier or manufacturer as a credit towards its Small Contractor/Small Contractor Minority Business Enterprise (MBE) contract requirement; failure to do so will result in not receiving credit towards the contract Small Contractor/Small Contractor Minority Business Enterprise (MBE) requirement.

State Project No. _____
Federal Aid Project No. _____
Description of Project _____

I, _____, acting in behalf of _____
(Name of person signing Affidavit) (Small Contractor/Small Contractor MBE contractor person,
_____ of which I am the_____ affirm that _____
firm, association or certify and corporation) (Title of Person) (Small
_____is a certified Small Contractor/Small
Contractor/Small Contractor MBE person, firm, association or corporation)
Contractor Minority Business Enterprise, as defined by Section 4a-60g of the Connecticut General Statutes, as revised.

I further certify and affirm that _____
(Small Contractor/Small Contractor MBE person, firm, association or corporation)
will assume the actual and contractual responsibility for the provision of the materials and/or supplies sought by _____. If a manufacturer, I produce goods from raw
(State Contractor)
materials or substantially alter them before resale, or if a supplier, I perform a commercially useful function in the supply process.

I understand that false statements made herein are punishable at Law (Sec. 53a-157, CGS, as revised).

_____
(Name of Small Contractor/Small Contractor MBE person, firm, association or corporation)

_____
(Signature and Title of Official making the Affidavit)

Subscribed and sworn to before me, the _____ day of _____ 200____.

_____
Notary Public (Commissioner of the Superior Court)

My Commission Expires _____

CERTIFICATE OF CORPORATION

I, _____, certify that I am the _____ (Official) of the Corporation named in the foregoing instrument; that I have been duly authorized to affix the seal of the Corporation to such papers as require the seal; that _____, who signed said instrument on behalf of the Corporation, was then _____ of said corporation; that said instrument was duly signed for and in behalf of said Corporation by authority of its governing body and is within the scope of its corporation powers.

_____

(Signature of Person Certifying) (Date)

(Corporate Seal)

ITEM #0020801A – ASBESTOS ABATEMENT

Description:

The work shall be conducted at the Glastonbury Maintenance Facility, located in Glastonbury, Connecticut.

Work under this item shall include the abatement of asbestos containing materials (ACM) and associated work by persons who are knowledgeable, qualified, trained and licensed in the removal, treatment, handling, and disposal of ACM and the subsequent cleaning of the affected environment. ACM shall include material composed of any type of asbestos in amounts greater than one percent (1%) by weight. The Contractor performing this work shall possess a valid Asbestos Abatement Contractor license issued by the Connecticut Department of Public Health (CTDPH).

These Specifications govern all work activities that disturb asbestos containing materials. All activities shall be performed in accordance with, but not limited to, the current revision of the OSHA General Industry Standard for Asbestos (29 CFR 1926.1001), the OSHA Asbestos in Construction Regulations (29 CFR 1926.1101), the USEPA Asbestos National Emission Standards for Hazardous Air Pollutants (NESHAP) Regulations (40 CFR Part 61 Subpart M), the CTDPH Standards for Asbestos Abatement, Licensure and Training (19a-332a-1 through 16, 20-440-1 through 9 & 20-441), and the CTDEEP Special Waste Disposal Regulations (22a-209-8(i)).

The asbestos abatement work shall include the removal and disposal of all ACM as identified on the Contract Plans and Specifications prior to the planned renovation/demolition project.

Deviations from these Specifications require the written approval of the Engineer.

The Contractor may elect to utilize an Alternative Work Practice (AWP), if approved by the CTDPH and the Engineer prior to the initiation of the abatement activities. An AWP is a variance from certain CTDPH asbestos regulatory requirements, which must provide the equivalent or a greater measure of asbestos emission control than the standard work practices prescribed by the CTDPH.

Materials:

All materials shall be delivered to the job site in the original packages, containers, or bundles bearing the name of the manufacturer, the brand name and product technical description.

No damaged or deteriorating materials shall be used. If material becomes contaminated with asbestos, the material shall be decontaminated or disposed of as asbestos-containing waste material. The cost to decontaminate and dispose of this material shall be at the expense of the Contractor.

Fire retardant polyethylene sheet shall be in roll size to minimize the frequency of joints, with factory label indicating four (4) or six (6) mil thickness.

Six (6) mil polyethylene disposable bags shall have pre-printed OSHA/EPA/DOT labels and shall be transparent.

Tape (or equivalent) capable of sealing joints in adjacent polyethylene sheets and for the attachment of polyethylene sheets to finished or unfinished surfaces must be capable of adhering under both dry and wet conditions.

Surfactant is a chemical wetting agent added to water to improve penetration and shall consist of fifty (50) percent polyoxyethylene ether and fifty (50) percent polyoxyethylene ester, or equivalent. The surfactant shall be mixed with water to provide a proportion of one (1) ounce surfactant to five (5) gallons of water, or as directed by the manufacturer.

Spray equipment must be capable of mixing necessary chemical agents with water, generating sufficient pressure and volume; and equipped with adequate hose length to access all necessary work areas.

Mechanical mastic removal equipment shall be suitable for the application and shall be operated in a manner which prevents damage to the underlying floor. Sanders, grinders, wire brushes and needle-gun type removal equipment shall be equipped with a High Efficiency Particulate Air (HEPA) filtered vacuum dust collection system.

Containers for storage, transportation and disposal of asbestos containing waste material shall be impermeable and both air- and watertight.

Labels and warning signs shall conform to OSHA 29 CFR 1926.1101, USEPA 40 CFR Part 61.152, and USDOT 49 CFR Part 172 as appropriate.

Encapsulant, a material used to chemically entrap asbestos fibers to prevent these fibers from becoming airborne, shall be of the type which has been approved by the Engineer. Use shall be in accordance with manufacturer's printed technical data. The encapsulant shall be clear and must be compatible with new materials being installed, if any.

Glovebag assembly shall be manufactured of six (6) mil transparent polyethylene or PVC with two (2) inward projecting long sleeve gloves, an internal pouch for tools, and an attached labeled receptacle for waste.

Mastic removal chemicals shall be low odor and non-citrus based, with a flash point in excess of 140° F.

Any planking, bracing, shoring, barricades and/or temporary sheet piling necessary to appropriately perform work activities shall conform to all applicable federal, state and local regulations.

Air filtration devices and vacuum units shall be equipped with HEPA filters.

Construction Methods:

(1) Pre-Abatement Submittals and Notices

(a) The Contractor shall submit, in accordance with CTDPH Standard 19a-332a-3, proper notification using the prescribed form, to the Commissioner, State of Connecticut, Department of Public Health at least ten (10) days prior to the commencement of work as follows:

1. Asbestos abatement projects involving greater than ten (10) linear feet (LF) or twenty-five (25) square feet (SF) of ACM (friable or non-friable) within a facility (i.e. interior abatement) and/or greater than 10 LF or 25 SF of friable ACM outside a facility, require an Asbestos Abatement Notification.

2. At sites scheduled for demolition, asbestos abatement of exterior non-friable ACM or interior abatement involving less than 10 LF or 25 SF of ACM (friable or non-friable), and/or exterior abatement involving less than 10 LF or 25 SF of friable ACM require a Demolition Notification. In most cases, the Demolition Contractor is responsible for filing the Demolition Notification not fewer than ten (10) days prior to the commencement of demolition. However, if a portion of the demolition activities are scheduled to be conducted in conjunction with and/or under the supervision of an Asbestos Abatement Contractor (i.e. in the event of a structure which has been condemned, structurally damaged, and/or deemed unsafe for asbestos abatement activities) then it is the responsibility of the Asbestos Abatement Contractor to submit the Demolition Notification.

3. In the event that an Asbestos Abatement Notification has been submitted and the subject facility is scheduled for demolition, a separate Demolition Notification form does not need to be submitted. In such cases, the submission of the Asbestos Abatement Notification form shall be deemed as satisfying the requirement for the notification of the demolition of the facility.

4. The Contractor filing the proper notification is responsible for all associated fees.

5. If the Contractor intends to dispose of ACM waste within the State of Connecticut, a copy of the Asbestos Abatement/Demolition Notification must also be submitted to the Department of Environmental Protection, Solid Waste Management Unit, and the Contractor must obtain a CTDEEP Special Waste Disposal authorization.

(b) Any AWP specifically described in these Specifications is pre-approved and is to be utilized at all times. Additional AWP methods may be used if approved by CTDPH and the Engineer. Should the Contractor desire to use AWP procedures that have not been

pre-approved, the Contractor shall submit in writing a description of the proposed methods to the Engineer and CTDPH for review and approval. Alternative procedures shall provide equivalent or greater protection than procedures which they replace. The Contractor is responsible for all fees associated with filing AWP applications which have not been pre-approved. Submission of AWP applications requires a CTDPH Project Designer License. The Contractor shall not proceed with any AWP other than those listed in this Specification without approval from both the CTDPH and the Engineer.

(c) Fifteen (15) working days prior to the commencement of asbestos abatement work, the Contractor shall submit to the Engineer for review and acceptance and/or acknowledgment of the following:

1. Copies of all required notifications.

2. AWP applications/approvals.

3. Permits and licenses for the removal, transport, and disposal of asbestos-containing or contaminated materials, including a CTDPH valid asbestos removal contractor's license.

4. Documentation dated within the previous twelve (12) months, certifying that all employees have received USEPA Model Accreditation Plan approved asbestos worker/supervisor training in the proper handling of materials that contain asbestos; understand the health implications and risks involved, including the illnesses possible from exposure to airborne asbestos fibers; understands the use and limits of respiratory equipment to be used; and understands the results of monitoring of airborne quantities of asbestos as related to health and respiratory equipment as indicated in 29 CFR 1926.1101 on an initial and annual basis, and copies of all employees CTDPH asbestos worker and/or supervisor licenses.

5. Documentation from the Contractor, typed on company letterhead and signed by the Contractor, certifying that all employees listed therein have received the following:

    a. Medical monitoring within the previous twelve (12) months, as required in 29 CFR 1926.1101;
    b. Respirator fit testing within the previous twelve (12) months as detailed in 29 CFR 1910.134 (for all employees who must also don a tight-fitting face piece respirator).

6. Copies of the EPA/State-approved certificates for the proposed asbestos landfill.

(d) No abatement shall commence until copies of all required submittals have been received and found acceptable to the Engineer. Those employees added to the Contractor's

original list will be allowed to perform work only upon submittal to, and receipt of, all required paperwork by the Engineer.

(2) Asbestos Abatement Provisions:

(a) General Requirements

The Abatement Contractor/Subcontractor shall possess a valid State of Connecticut Asbestos Contractor License. Should any portion of the work be subcontracted, the subcontractor must also possess a valid State of Connecticut Asbestos Contractor License. The Asbestos Abatement Site Supervisor employed by the Contractor shall be in control on the job site at all times during asbestos abatement work. All employees of the Contractor who shall perform work (i.e. Asbestos Abatement Site Supervisor, Asbestos Abatement Worker) shall be properly certified/licensed by the State of Connecticut to perform such duties.

All labor, materials, tools, equipment, services, testing, insurance (with specific coverage for work on asbestos), and incidentals which are necessary or required to perform the work in accordance with applicable governmental regulations, industry standards and codes, and these Specifications, shall be provided by the Contractor. The Contractor shall be prepared to work all shifts and weekends throughout the course of this project.

Prior to beginning work, the Engineer and Contractor shall perform a visual survey of each work area and review conditions at the site for safety reasons. In addition, the Contractor shall instruct all workers in all aspects of personnel protection, work procedures, emergency evacuation procedures and use of equipment including procedures unique to this project.

The Contractor shall:

Shutdown and isolate heating, cooling, and ventilating air systems to prevent contamination and fiber dispersal to the other areas of the building.

Shut down and lock out electrical power, including all receptacles and light fixtures, when feasible. The use or isolation of electrical power will be coordinated with all other ongoing uses of electrical power at the site.

Coordinate all power and fire alarm isolation with the appropriate representatives.

When necessary, provide temporary power and adequate lighting and ensure safe installation of electrical equipment, including ground fault protection and power cables, in compliance with applicable electrical codes and OSHA requirements. The Contractor is responsible for proper connection and installation of electrical wiring.

If sufficient electrical service is unavailable, the Contractor may need to supply electrical power to the site by fuel operated generator(s). Electrical power supply shall be sufficient for all equipment required for this project in operation throughout the duration of the project. If the

Contractor elects to supply electrical power to the work site through the use of generators, the Contractor shall ensure that each work area is a manageable size such that removal, final cleaning and reoccupancy testing can be accomplished within one work shift while negative air machines are operating.

Negative pressure must be continuously maintained in each work area, until the area achieves satisfactory reoccupancy criteria and is approved by the Project Monitor to be deregulated. If phases cannot be subdivided into manageable work areas that can be completed within one shift, negative air pressure must be maintained twenty-four (24) hours per day and the Contractor shall establish temporary electrical service to the site, rather than utilize generators.

Water service may not be available at the site. Contractor shall supply sufficient water for each shift to operate the decontamination shower units as well as to maintain the work areas adequately wet.

Ladders and/or scaffolds shall be in compliance with OSHA requirements, and of adequate length, strength and sufficient quantity to support the scope of work. Use of ladders/scaffolds shall be in conformance with OSHA 29 CFR 1926 Subpart L and X requirements.

Work performed at heights exceeding six feet (6') shall be performed in accordance with the OSHA Fall Protection Standard 29 CFR 1926 Subpart M including the use of fall arrest systems as applicable.

Data provided regarding asbestos sampling conducted throughout the structure(s) is for informational purposes only. Under no circumstances shall this information be the sole means used by the Contractor for determining the presence, location and extent of all asbestos containing materials. The Contractor shall verify all field conditions and quantities affecting performance of the work as described in these Specifications in accordance with OSHA, USEPA, USDOT, CTDEEP standards. Compliance with the applicable requirements is solely the responsibility of the Contractor.

The Engineer will provide a Project Monitor to oversee the activities of the Contractor. No asbestos work shall be performed until the Project Monitor is on-site. Pre-abatement, during abatement and post-abatement air sampling will be conducted as deemed necessary by the Project Monitor. Waste stream testing will be performed, as necessary, by the Project Monitor prior to waste disposal.

(b) Set-Up

Pre-clean the work areas using HEPA filtered equipment (vacuum) and/or wet methods as appropriate, collecting and properly containing all dust and debris as asbestos-containing/asbestos contaminated waste. Vacuum units, of suitable size and capabilities for the project, shall have HEPA filters capable of trapping and retaining at least 99.97 percent of all monodispersed particles of three micrometers in diameter or larger. Do not use methods that raise dust, such as dry sweeping or vacuuming with equipment not equipped with HEPA filters.

After pre-cleaning, movable objects shall be removed from the work areas with the utmost care to prevent damage of any kind and relocated to a temporary storage location coordinated with the Engineer. The Contractor is responsible for protecting all fixed objects that are permanent fixtures or are too large to remove and remain inside the Regulated Area. Fixed objects shall be enclosed with one layer of six (6) mil polyethylene sheeting sealed with tape.

Where non-ACM insulation exists within a Regulated Area, the Contractor has the option of removing the non-ACM insulation material and disposing of as ACM debris, or decontaminating and protecting non-ACM insulation material with two (2) layers of six (6) mil polyethylene sheeting. Any non-ACM insulation removed shall be replaced with new material of equal or better quality at the Contractor's expense.

The Contractor shall establish contiguous to the Regulated Area, a Worker Decontamination Enclosure System consisting of Equipment Room, Shower Room and Clean Room in series, as detailed below. Access to the Regulated Area shall only be through this enclosure.

Access between rooms in the Worker Decontamination Enclosure System shall be through airlocks. Other effective designs are permissible. The Clean Room, Shower Room and Equipment Room located within the Worker Decontamination Enclosure, shall be contiguously connected with taped airtight edges, thus ensuring the sole source of airflow originates from outside the regulated areas, once the negative pressure differential within the Regulated Area is established.

The Clean Room shall be adequately sized to accommodate workers and shall be equipped with a suitable number of hooks, lockers, shelves, etc., for workers to store personal articles and clothing. Changing areas of the Clean Room shall be suitably screened from areas occupied by the public.

The Shower Room shall be of sufficient capacity to accommodate the number of workers. One shower stall shall be provided for each eight (8) workers. Showers shall be equipped with hot and cold or warm running water through the use of electric hot water heaters supplied by the Contractor. No worker or other person shall leave a Regulated Area without showering. Shower water shall be collected and filtered using best available technology and dumped down an approved sanitary drain. Shower stalls and plumbing shall include sufficient hose length and drain system or an acceptable alternate.

The Contractor shall establish contiguous to the Regulated Area an Equipment/Waste Removal Decontamination Enclosure System consisting of two (2) totally enclosed chambers divided by a double flap curtained opening. Other effective designs are permissible. This enclosure must be constructed so as to ensure that no personnel enter or exit through this unit.

The Contractor shall ensure that no personnel or equipment be permitted to leave the Regulated Area until proper decontamination procedures (including HEPA vacuuming, wet wiping and showering) to remove all asbestos debris have occurred. No asbestos-contaminated materials or persons shall enter the Clean Room.

Seal off all windows, doorways, skylights, ducts, grilles, diffusers, vents, light fixtures, electrical receptacles, suspended ceiling tile systems and any other openings between the Regulated Area and the uncontaminated areas outside of the Regulated Area, including the outside of the building, with critical barriers consisting of a minimum of one (1) layer of six (6) mil polyethylene sheeting securing the edges with tape. Doorways and corridors which will not be used for passage during work and separate the regulated areas from occupied areas must be sealed with fixed critical barriers constructed of 2" x 4" wood or metal framing 16" O.C., with ½" plywood on the occupied side and two layers of six (6) mil polyethylene sheeting on the Regulated Area side to prevent unauthorized access or air flow.

The Contractor shall create a negative pressure differential in the range of 0.02 to 0.04 inches of water column between the Regulated Area and surrounding areas by the use of acceptable negative air pressure equipment. Exhaust air filtration units shall be equipped with HEPA filters capable of providing sufficient air exhaust to create a minimum pressure differential of 0.02 inches of water column, and to allow a sufficient flow of air through the area providing 4 air changes per hour. The Contractor shall provide a sufficient quantity of HEPA air filters to maintain the pressure differential throughout the duration of the project. An automatic warning system shall be incorporated into the equipment to indicate pressure drop or unit failure. Continuously monitor the pressure differential between the Regulated Area and surrounding area to ensure exhaust air filtration equipment maintains a minimum pressure differential of 0.02 inches of water column. The Contractor shall provide actual air flow measurement of filtration units while the unit is in-place and calculate actual air exchange rates. No air movement system or air filtering equipment shall discharge unfiltered air outside the Regulated Area.

A Negative Pressure Enclosure (NPE) shall be constructed via covering of floor and wall surfaces with polyethylene sheeting sealed with tape. Polyethylene shall be applied alternately to floors and walls. Cover floors first, with a layer of six (6) mil polyethylene sheeting, so that polyethylene extends at least twelve (12) inches up on wall. Cover wall with a layer of four (4) mil polyethylene sheeting to twelve (12) inches beyond the wall/floor intersection, thus overlapping the floor material by a minimum of twenty-four (24) inches. Repeat the process for the second layer of polyethylene. There shall be no seams at wall-to-floor joints. Protect carpet and floor tile with two additional layers of six (6) mil reinforced polyethylene in addition to the prior two layers required.

Conspicuously label and maintain emergency and fire exits from the Regulated Area satisfactory to fire officials.

Post warning signs meeting the specifications of OSHA 29 CFR 1910.1001 and 29 CFR 1926.1101 at each Regulated Area. In addition, signs shall be posted at all approaches to Regulated Areas so that an employee or building occupant may read the sign and take the necessary protective steps before entering the area. Additional signs may require posting following construction of workplace enclosure barriers.

(c) **Alternate set-up requirements for exterior non-friable asbestos abatement procedures**

In lieu of the establishment of a negative pressure enclosure (NPE) system as described by CTDPH Sections 19a-332a-5(c), 5(d), 5(e), and 5(h), non-friable ACM will be removed from exterior work areas within an outdoor Regulated Area(s). The regulated work area will be established by the use of appropriately labeled barrier tape and postings in compliance with CTDPH 19a-332a-5(a) as well as OSHA 29 CFR 1926.1101. A remote personnel decontamination unit as specified in Section 19a-332a-6 will be required. This method shall only be utilized provided exposure assessment air sampling data collected during the removal of the exterior non-friable materials indicates that the exposure levels during removal of such materials do not exceed 0.1 asbestos f/cc. Should exposure assessment air sampling data exceed this level, and engineering efforts to reduce the airborne fiber levels not be successful in reducing the levels to less than 0.1 f/cc, removal shall occur within these areas under full containment conditions.

(d) **Alternate set-up requirements for "spot repair" asbestos abatement procedures on less than three (3) linear or square feet of asbestos containing material**

In lieu of the establishment of a negative pressure enclosure (NPE) system as described by CTDPH Sections 19a-332a-5(c), 5(d), 5(e), and 5(h), less than 3 LF or 3 SF of ACM will be removed as a "spot repair" in accordance with CTDPH Section 19a-332a-10. A regulated area will be established by the use of appropriately labeled barrier tape and postings in compliance with CTDPH 19a-332a-5(a) as well as OSHA 29 CFR 1926.1101. A remote personnel decontamination unit as specified in Section 19a-332a-6 will be required. Air-tight barriers will be constructed to assure that asbestos fibers released during abatement activities are contained within the work area. Glovebags are permitted, as specified below. ACM will be adequately wetted prior to disturbance and remain wet until placed in a leak-tight container. Following abatement, clean-up methods within the work area will include HEPA-filtered vacuuming or wet cleaning techniques, until no visible residue remains.

Glovebags utilized to perform "spot repair" activities on asbestos containing pipe insulation/mudded fitting insulation, in conformance with OSHA 29 CFR 1926.1101(g)(5)(ii), shall be:

1. Constructed of 6 mil poly, seamless at bottom, unmodified;
2. Installed so that it completely covers the circumference of pipe or other structure where work is to be done, with impermeable dropcloths placed on all surfaces beneath the work area;
3. Smoke-tested for leaks and sealed, as needed;
4. Used only once, may not be moved;
5. Used only on surfaces with temperatures <150ºF;
6. Collapsed by removing air via HEPA-vacuum, prior to disposal;
7. Adhered to surfaces which are intact, surfaces with loose and friable material shall be sealed in two layers of 6 mil poly or otherwise rendered intact;
8. Capable of sustaining integrity at connection site to attached waste bag, which must have equivalent of sliding valve for disconnection (as applicable); and

9. Performed by a minimum of two (2) persons.

Glovebags may also be used for "spot repair" abatement procedures involving additional materials (e.g. floor tile/linoleum, transite, etc.) provided that the glovebag is capable of fully enclosing the material to be removed.

(e) Personnel Protection

The Contractor shall utilize all appropriate engineering controls and safety and protective equipment while performing the work in accordance with OSHA, USEPA, USDOT, CTDEEP and CTDPH regulations.

The Contractor shall provide and require all workers to wear protective clothing in the Regulated Areas where asbestos fiber concentrations may reasonably be expected to exceed the OSHA established Permissible Exposure Limits (PEL) or where asbestos contamination exists. Protective clothing shall include impervious coveralls with elastic wrists and ankles, head covering, gloves and foot coverings.

Respiratory protection shall be provided and shall meet the requirements of OSHA as required in 29 CFR 1910.134, and 29 CFR 1926.1101 as well as the requirements of the CTDPH regulations. A formal respiratory protection program must be implemented in accordance with 29 CFR 1926.1101 and 29 CFR 1910.134. The Contractor shall provide respirators from among those approved as being acceptable for protection by the National Institute for Occupational Safety and Health (NIOSH) under the provisions of 30 CFR Part ll.

All other necessary personnel protective equipment (i.e. hardhat, work boots, safety glasses, hearing protection, etc.) required to perform the asbestos abatement work activities shall conform to all applicable federal, state and local regulations.

All other qualified and authorized persons entering into a Regulated Area (i.e. Project Monitor, Regulatory Agency Representative) shall adhere to the requirements of personnel protection as stated in this section.

(f) Asbestos Abatement Procedures

The Asbestos Abatement Site Supervisor, as the OSHA Competent Person, shall be at the site at all times.

The Contractor shall not begin abatement work until authorized by the Project Monitor, following a pre-abatement visual inspection.

All workers and authorized persons shall enter and leave the Regulated Area through the Worker Decontamination Enclosure System, leaving contaminated protective clothing in the Equipment Room for reuse or disposal of as asbestos contaminated waste. No one shall eat, drink, smoke, chew gum or tobacco, or apply cosmetics while in a Regulated Area.

The following details the extent of each phase of operation designated for this Project. Phase areas may be combined or divided at the direction of the Engineer. Proceed through the sequencing of the work phases under the direction of the Engineer.

Phase 1 – Boiler Room Interior

Phase 1 includes the removal of:

- **Presumed boiler internal insulations/packings/gaskets/ribbing/etc.**

If boiler is to be dismantled for salvage/reuse or disposed of, Contractor shall be responsible for dismantling boiler within containment to access any suspect ACM within boiler unit for removal. **Asbestos removal shall be performed under full containment conditions with a pressure differential and contiguous decontamination system in accordance with CTDPH 19a-332a-5, 6 and 7, OSHA Class I and USEPA NESHAP requirements. Phase 1 reoccupancy air clearance testing shall utilize PCM analysis in accordance with CTDPH 19a-332a-12.**

Phase 2 – Boiler Room Exterior – Combustion Air Louver Window

Phase 2 includes the removal of:

- **Presumed exterior waterproofing under brick facade (removal as needed for installation of new louver vents)**

A regulated area(s) shall be established at the perimeter of the work area(s) and the Contractor shall control access. A remote personnel decontamination unit shall be utilized. Removal shall be undertaken in accordance with OSHA Class II and USEPA Asbestos NESHAP requirements.

The above material is presently presumed to be present and is presumed to be ACM. Contractor shall expose the materials as directed under other contract items, at which time, if present, the Engineer will sample to confirm/refute the presence of ACM. When accessible, should the materials be confirmed present and be scheduled to be impacted, they should be treated as asbestos containing materials unless sampled by the Engineer and confirmed as non-ACM.

During removal, the Contractor shall spray asbestos materials with amended water using airless spray equipment capable of providing a "mist" application to reduce the release of airborne fibers. Spray equipment shall be capable of mixing wetting agent with water and capable of generating sufficient pressure and volume. Hose length shall be sufficient to reach all of the Regulated Area. Do not “flood” the area with hose type water supply equipment with the potential to create water releases from the regulated area.

The Contractor shall continue to spray the asbestos materials with amended water, as necessary, throughout removal activities to ensure the asbestos materials remain adequately wet. The asbestos materials shall not be allowed to dry out.

In order to minimize airborne asbestos concentrations inside the Regulated Area, the Contractor shall remove the adequately wetted asbestos in manageable sections. In addition, asbestos materials removed from any elevated level shall be carefully lowered to the floor.

The Contractor shall promptly place the adequately wet asbestos material in disposal containers (six (6) mil polyethylene bags/fiber drum/poly-lined dumpsters, etc.) as it is removed. Large components removed intact may be wrapped in two (2) layers of six (6) mil polyethylene sheeting secured with tape. As the disposal containers are filled, the Contractor shall promptly seal the containers, apply caution labels and clean the containers before transportation to the equipment decontamination area. Bags shall be securely sealed to prevent accidental opening and leakage by taping in gooseneck fashion. Small components and asbestos-containing waste with sharp-edged components (e.g. nails, screws, metal lath, tin sheeting) which could tear polyethylene bags and sheeting shall be placed in clean drums and sealed with locking ring tops. All waste containers shall be leak-tight, (typically consisting of two layers of 6 mil poly (or bags)), and shall be properly labeled and placarded with OSHA Danger labels, DOT shipping labels, markings and placards and USEPA NESHAP generators labels. Containers shall be decontaminated by wet cleaning and HEPA vacuuming within the equipment decontamination area prior to exiting the regulated area. Wet clean each container thoroughly before moving to Holding Area.

If at any time during asbestos removal, the Project Monitor should suspect contamination of areas outside the Regulated Area, the Contractor shall immediately stop all abatement work and take steps to decontaminate these areas and eliminate causes of such contamination. Unprotected individuals shall be prohibited from entering contaminated areas until air sampling and/or visual inspections determine decontamination.

After completion of abatement work, all surfaces from which asbestos has been removed shall be wet brushed, using a nylon brush, wet wiped and sponged or cleaned by an equivalent method to remove all visible material (wire brushes are not permitted). During this work the surfaces being cleaned shall be kept wet. Cleaning shall also include the use of HEPA filtered vacuum equipment.

The Contractor shall also remove and containerize all visible accumulations of asbestos-containing and/or asbestos-contaminated debris which may have splattered or collected on the polyethylene engineering controls/barriers.

The Contractor shall clean surfaces of contaminated containers and equipment thoroughly by vacuuming with HEPA filtered equipment and wet sponging or wiping before moving such items into the Equipment Decontamination Enclosure System for final cleaning and removal to uncontaminated areas.

The Contractor shall remove contamination from the exteriors of the air filtration devices, scaffolding, ladders, extension cords, hoses and other equipment inside the Regulated Area. Cleaning may be accomplished by brushing, HEPA vacuuming and/or wet cleaning. The Contractor shall wet wipe the Regulated Area beginning at the point farthest away from the negative air filtration units using cotton rags or lint free paper towels. Rags and towels shall be disposed of after each use. Workers should avoid the use of dirty rags to insure proper cleaning of surfaces. Mop the entire floor with a clean mop head and amended water. Water shall be changed frequently. For those Regulated Areas where lead is also disturbed, the cleaning shall also include a wet washing with a high phosphate detergent solution and HEPA vacuuming. Waste water shall be filtered using best available technology into leak-proof containers prior to being transported to a sanitary sewer for discharge.

Once the Regulated Area surfaces have dried, the Project Monitor shall perform a thorough post abatement visual inspection utilizing protocols from the ASTM Standard E1368-90 *Standard Practice for Visual Inspection of Asbestos Abatement Projects*. All surfaces within the Regulated Area, including but not limited to ledges, beams, and hidden locations shall be inspected for visible residue. Evidence of asbestos contamination identified during this inspection will necessitate further cleaning as heretofore specified. The area shall be re-cleaned at the Contractor's expense, until the standard of cleaning is achieved.

Once the area has received a satisfactory post-abatement visual inspection, any equipment, tools or materials not required for completion of the work, shall be removed by the Contractor from the Regulated Area. Negative air filtration devices shall remain in place and operating for the remainder of the clean-up operation.

Following the post-abatement visual, the Contractor shall apply a lock-down encapsulant to all surfaces within the Regulated Area from which asbestos has been removed and the cleaned inner layer of polyethylene.

(g) Air Monitoring Requirements

1. The Contractor shall:

    a. Provide air monitoring equipment including sample filter cassettes of the type and quantity required to properly monitor operations and personnel exposure surveillance throughout the duration of the project.

    b. Conduct personnel exposure assessment air sampling, as necessary, to assure that workers are using appropriate respiratory protection in accordance with OSHA Standard 1926.1101. Documentation of air sampling results must be recorded at the work site within twenty-four (24) hours and shall be available for review until the job is complete.

2. The Project Monitor, acting as the representative of the Engineer during abatement activities, will:

a. Collect air samples in accordance with the current revision of the NIOSH 7400 Method of Air Sampling for Airborne Asbestos Fibers while overseeing the activities of the Abatement Contractor. Frequency and duration of the air sampling during abatement will be representative of the actual conditions at the abatement site. The size and configuration of the asbestos project will be a factor in the number of samples required to monitor the abatement activities and shall be determined by the Project Monitor. The following schedule of samples may be collected by the Project Monitor:

1. Pre-Abatement (Optional)
    a. Background areas
    b. Area(s) adjacent to Work Area(s)
    c. Work Area(s)

2. During Abatement (Optional)
    a. At the exhaust of air filtering device
    b. Within Regulated Area(s)
    c. Area(s) adjacent to Regulated Areas(s) (exterior to critical barriers)
    d. At the Decontamination Enclosure System

3. Post-Abatement (reoccupancy air clearance testing) (**REQUIRED)**
    a. Interior Regulated NPE Area - At least five (5) per homogenous area

Abatement Activity	**Pre-Abatement**	**During Abatement**	**Post-Abatement**
Greater than 1500 SF/500 LF - Interior	PCM	PCM	TEM
Greater than 3 LF/3 SF and Less than 1500 SF/500 LF – Interior	PCM	PCM	PCM
Spot Repair and Glovebag Procedures (<3 LF/3 SF)	---	PCM	---
Exterior Friable/Non-Friable	---	PCM	---

If air samples collected outside of the Regulated Area during abatement activities indicate airborne fiber concentrations greater than original background levels, or greater than 0.1 f/cc, as determined by Phase Contrast Microscopy (PCM), whichever is larger, an examination of the Regulated Area perimeter shall be conducted and the integrity of barriers shall be restored. Cleanup of surfaces outside the Regulated Area using HEPA vacuum equipment or wet cleaning techniques shall be done prior to resuming abatement activities.

(h) Post-Abatement Reoccupancy Procedures

For interior NPE Regulated Areas, clearance air sampling will be performed by the Project Monitor as specified in the Air Sampling Schedule. Clearance sampling will be undertaken using aggressive sampling techniques. Sampling and analysis of clearance samples will follow State of Connecticut Regulations, Section 19a-332a-12. Areas which do not comply shall continue to be cleaned by and at the Contractors expense, until the specified Standard of Cleaning is achieved as evidenced by results of air testing. When the Regulated Area passes the re-occupancy clearance, controls established by these Specifications may be removed.

1. Air sampling will not begin until after the area has received an acceptable post abatement visual inspection, encapsulation has been completed, and no visible water, liquid encapsulant or condensation remain in the Regulated Area.

2. Sampling equipment will be placed at random throughout the Regulated Area.

3. The following aggressive air sampling procedures will be used within the Regulated Area during all air clearance monitoring:

    a. Before starting the sampling pumps, direct the exhaust from forced air equipment (such as a 1 horsepower leaf blower) against all walls, ceilings, floors, ledges and other surfaces in the Regulated Area.
    b. Pre-calibrate the sampling pump flow rates through the use of a rotameter calibrated to a primary standard.
    c. Start the sampling pumps and sample for the required time.
    d. Post-calibrate the sampling pump flow rates.

4. Air volumes taken for clearance sampling shall be sufficient to accurately determine (to a 95 percent probability) fiber concentrations to 0.010 f/cc of air (1,200 liters).

5. Analysis shall follow the requirements of CTDPH 19a-332a-12.

6. Each homogeneous Regulated Area which does not meet the clearance criteria shall be thoroughly re-cleaned using HEPA vacuuming and/or wet cleaning, with the negative pressure ventilation system in operation. New samples shall be collected in the Regulated Area as described above. The process shall be repeated until the Regulated Area passes the test, with the cost of repeat sampling being borne entirely by the Contractor.

7. For an asbestos abatement project with more than one homogeneous Regulated Area, the release criterion shall be applied independently to each Regulated Area.

8. These clearance sampling procedures may also be implemented for exterior NPE work areas at the discretion of the Engineer.

(i) Post Abatement Work Area Deregulation

The Contractor shall remove all remaining polyethylene, including critical barriers, and Decontamination Enclosure Systems leaving negative air filtration devices in operation. HEPA vacuum and/or wet wipe any visible residue which is uncovered during this process. All waste generated during this disassembly process shall be discarded as ACM waste.

A final visual inspection of the work area shall be conducted by the Competent Person and the Project Monitor to ensure that all visible accumulations of suspect materials have been removed and that no equipment or materials associated with the abatement project remain.

The Contractor shall restore all work areas and auxiliary areas utilized during work to conditions equal to or better than original. Any damage caused during the performance of the work activity shall be repaired by the Contractor at no additional expense to the Engineer.

(j) Waste Disposal

Unless otherwise specified, all removed materials and debris resulting from execution of this project shall become the responsibility of the Contractor and removed from the premises. Materials not scheduled for reuse shall be removed from the site and disposed of in accordance with all applicable Federal, State and local requirements.

Waste removal dumpsters and cargo areas of transport vehicles shall be lined with a layer of six (6) mil polyethylene sheeting to prevent contamination from leaking or spilled containers. Floor sheeting shall be installed first, and shall be extended up sidewalls 12-inches. Wall sheeting shall overlap floor sheeting 24-inches and shall be taped into place.

OSHA “Danger” signs must be attached to vehicles used to transport asbestos-containing waste prior to loading ACM waste. The signs must be posted so that they are plainly visible.

Waste haulers and disposal facilities utilized shall match those indicated on the submitted CTDPH notification.

Ensure all waste containers (bags, drums, etc.) are properly packed, sealed and labeled with USEPA NESHAP generator labels, OSHA danger labels and DOT shipping labels. For each shipment of ACM waste, the Contractor shall complete an EPA-approved asbestos waste shipment record.

Authorized representatives signing waste shipment records on behalf of the generator must have USDOT Shipper Certification training in accordance with HMR 49 CFR Parts 171-180.

Transport vehicles hauling ACM waste shall have appropriate USDOT placards visible on all four (4) sides of the vehicle.

The Contractor shall dispose of asbestos-containing and/or asbestos contaminated material at an EPA authorized site and must be in compliance with the requirements of the Special Waste Provisions of the Office of Solid Waste Management, Department of Environmental Protection, State of Connecticut, or other designated agency having jurisdiction over solid waste disposal.

Any asbestos-containing and/or asbestos-contaminated waste materials which also contain other hazardous contaminants shall be disposed of in accordance with the EPA's Resource Conservation and Recovery Act (RCRA), CTDEEP and ConnDOT requirements. Materials may be required to be stored on-site and tested by the Project Monitor to determine proper waste disposal requirements.

(k) Project Closeout Data:

1. Provide the Engineer, within 30 days of completion of asbestos abatement, a compliance package; which shall include, but not be limited to, the following:

    a. Asbestos Abatement Site Supervisor job log;
    b. OSHA personnel air sampling data;
    c. Completed waste shipment records.

The Contractor shall submit the original completed waste shipment records to the Engineer.

Method of Measurement:

No measurement will be made for the work in this Section. The completed work shall be paid as a lump sum.

Basis of Payment:

The lump sum bid price for this item shall include the specialty services of the Asbestos Removal Contractor including: labor, materials, equipment, insurance, permits, notifications, submittals, personal air sampling, personal protection equipment, temporary enclosures, utility costs, incidentals, fees and labor incidental to the removal, transport and disposal of ACM, including close out documentation.

Final payment for asbestos abatement will not be made until all the project closeout data submittals have been completed (including waste shipment record(s) signed by an authorized disposal facility representative) and provided to the Engineer. Once the completed package has been received in its entirety, the Engineer will make the final payment to the Contractor.

Pay Item	Pay Unit
Asbestos Abatement	Lump Sum

ITEM #0100069A – REMOVAL OF FUEL TANK(S)

Description:

Work under this item shall include all activities related to the removal and disposal of a 1,000-gallon propane above-ground storage tank (AST) utilized for the Glastonbury facility's emergency generator. In addition, all of the associated AST equipment and piping shall also be removed as shown on the Contract Plans and all floor and/or wall penetrations sealed with cement grout.

The work shall be performed by an experienced firm that has successfully completed tank removal and disposal work similar to that indicated herein.

All activities shall be performed in accordance with USEPA 40 CFR Parts 260-268, 280 and 281, OSHA 29 CFR 1926, OSHA 29 CFR 1910.120, CTDEEP 22a-449(d)-1 and 22a-449(c), NFPA 30, NFPA 327, API 1604, API 2015, and all other applicable state and federal regulations and codes.

Materials:

All abandoned floor and wall penetrations shall be filled with cement grout, or hydraulic cement in wet locations.

Construction Methods:

(1) Pre-Removal Submittals:

At least fifteen (15) working days prior to the start of any tank removal and disposal work, the Contractor shall submit the following to the Engineer for review and approval:

1. Proposed removal procedures to be utilized, including vapor purging and atmosphere testing.
2. Proposed protective/safety measures to be implemented.
3. Proposed C&D bulky waste disposal facility.
4. Proposed steel/scrap metal recycling facility.

(2) General Provisions:

The Contractor shall remove and dispose of one 1,000 gallon propane AST located at 235 Oak Street in Glastonbury, Connecticut, as indicated on the Plans.

Removal and disposal shall include the removal of all appurtenances associated with the tank (fuel piping, vent piping, conduits, tank and piping monitoring devices, etc.). Removal shall also include all necessary vapor purging, cleaning, etc.

The Contractor shall exercise all necessary precautions for fire prevention. Acceptable fire extinguishers shall be made available at all times. Flame/torch cutting is prohibited.

The Contractor shall prevent damage to any existing utilities, structures, equipment and appurtenances that are to remain in service.

(3) Vapor Purging:

Following the removal of the liquid contents of the tank by a State of Connecticut licensed LP Gas vendor, the vessel will be allowed to vent to the atmosphere to enable all remaining propane vapor to be released. Following sufficient time for ventilation, the Contractor shall conduct testing within the vessel to ensure adequate purging has occurred.

(4) Atmosphere Testing:

The atmosphere inside and surrounding the AST shall be regularly tested by the Contractor for flammable or combustible vapor concentrations until the tank is removed from both the service area and the site. Such tests are to be made with a combustible gas indicator provided by the Contractor which is properly calibrated and maintained according to the manufacturer's instructions. Contractor personnel responsible for testing must be thoroughly familiar with the use of the instrument and the interpretation of the instrument's readings.

Following ventilation, the Contractor shall test the atmosphere inside the vessel with a properly calibrated combustible gas indicator. Readings must be zero percent of the LEL, indicating that the vessel is "gas-free," before it is considered safe for removal from the ground.

(5) Removal Provisions:

Removal practices shall be acceptable to the Engineer, shall ensure the safety of persons, equipment and structures that are to remain, and shall provide adequate protection of the environment. The Contractor shall schedule removal activities to minimize delays and construction activities on-site.

The Contractor shall furnish and employ any such equipment as may be necessary for the protection of property, proper completion of the work and the safety of the public and employees of the Contractor and the Department.

Abandoned product piping shall be cut at surface grade and sealed with cement grout. For structures not scheduled for demolition, any holes resulting from the removal of vent pipe brackets, return and supply pipes, or other conduits removed or abandoned as a part of removal activities shall be plugged with cement masonry.

(6) Disposal Procedures:

Scrap metal (tanks, piping, etc) generated during the demolition process shall be recycled as scrap metal at an approved scrap metal recycling facility following cleaning. Non-hazardous, non-metallic waste shall be recycled off site or disposed of as C&D bulky waste in accordance with the Connecticut Department of Energy and Environmental Protection (CTDEEP) Solid Waste management standards. The Contractor shall recycle as much C&D bulky waste as practical.

Removed items shall not be reused or salvaged by the Contractor.

(7) Post-Removal Submittals:

The Contractor shall provide the Engineer, within 30 days of completion of the tank removal work, a compliance package, which shall include, at a minimum:

1. Shipping papers from the approved solid waste bulky waste disposal/recycling facility indicating receipt and acceptance of C&D bulky waste debris.
2. Shipping papers and Certificates of Destruction/Recycling from the approved scrap metal recycling facility indicating receipt and acceptance of scrap metal debris.

Method of Measurement:

This item will be paid for at the contract lump sum price for "Removal of Fuel Tank(s)" complete. Materials associated with the removal and disposal of the AST, such as permits, equipment, disposal, etc., will not be measured for payment.

Basis of Payment:

The Contract price lump sum shall include all related necessary work and material associated with the removal and disposal of the AST, including, but not limited to permits, equipment, material recycling and disposal, air monitoring, floor and wall patching, and lighting. No additional payment will be made for other material or equipment necessary for the satisfactory completion of the work.

Removal and disposal of residual liquid product from the AST will be in accordance with Item 0101143A – Handling and Disposal of Regulated Items.

Pay Item	Pay Unit
Removal of Fuel Tank(s)	LS

ITEM #0100072A – REMOVAL AND DISPOSAL OF UNDERGROUND TANKS

Description:

Work under this item shall include all activities related to the excavation, removal and disposal of the underground storage tanks (USTs) and their associated equipment and piping, as shown on the Contract Plans, at both the Glastonbury and Hartford Maintenance Facilities. Specifically, the project includes the removal and disposal of a 4,000-gallon gasoline UST, a 4,000-gallon diesel fuel UST, and a 2,000-gallon fuel oil UST at the Glastonbury Maintenance Facility, and a 4,000-gallon gasoline UST and a 4,000-gallon diesel fuel UST at the Hartford Maintenance Facility.

Work under this item shall include all activities related to the excavation, removal and disposal of the USTs and their associated equipment and piping, as shown on the Contract Plans.

The work shall be performed by an experienced firm that has successfully completed UST excavation, removal and disposal work similar to that indicated herein.

All activities shall be performed in accordance with USEPA 40 CFR Parts 260-268, 280 and 281, OSHA 29 CFR 1926, OSHA 29 CFR 1910.120, CTDEP 22a-449(d)-1 and 22a-449(c), NFPA 30, NFPA 327, API 1604, API 2015, and all other applicable state and federal regulations and codes.

Materials:

Backfill material shall conform to the requirements of Section 2.13 of the Specifications.

Construction Methods:

(1) Pre-Excavation and Removal Submittals:

(a) At least fifteen (15) working days prior to the start of any excavation, removal and disposal work, the Contractor shall submit the following to the Engineer for review and approval:

1. Proposed excavation and removal procedures to be utilized, including UST vapor purging and atmosphere testing.
2. Proposed protective/safety measures to be implemented.
3. Proposed C&D bulky waste disposal facility.
4. Proposed steel/scrap metal recycling facility.

(b) The Contractor shall notify the Department's current UST Class A/B Operator, David Hartley, ConnDOT Office of Properties and Facilities, via email (David.Hartley@ct.gov) **45 days prior to the projected date** of the UST removal(s).

(c) Seventy-two (72) hours prior to the start of any excavation/removal related activity, the Contractor shall notify the following:

- Office of the State Fire Marshal, Fire and Life Safety Specialist.
- Town of Glastonbury Fire Marshal
- City of Hartford Fire Marshal

Prior to the start of on-site activity, the Contractor shall provide the Engineer with written confirmation that the above contacts have been appropriately notified.

(2) General Provisions:

The Contractor shall clean (removal of sludges and residuals), remove and dispose of: one 4,000-gallon gasoline UST, one 4,000-gallon diesel fuel UST and one 2,000-gallon fuel oil UST located at ConnDOT's Glastonbury Maintenance Facility at 235 Oak Street in Glastonbury, and one 4,000 gallon gasoline UST and one 4,000-gallon diesel fuel UST located at the Hartford Maintenance Facility at 49 Jennings Road in Hartford, Connecticut.

Removal and disposal shall include the removal of all appurtenances associated with the tanks (manways, fuel piping, vent piping, conduits, tank and piping monitoring devices, etc.). Removal shall also include all necessary vapor purging, defuming, cleaning, etc.

Disposal of petroleum products and waters from within the tanks and piping structures shall be performed by the Contractor in accordance with Item 0101143A – Handling and Disposal of Regulated Items.

The Contractor shall exercise all necessary precautions for fire prevention. Acceptable fire extinguishers shall be made available at all times. Flame/torch cutting is prohibited.

The Contractor shall prevent damage to any existing utilities, structures, equipment and appurtenances that are to remain in service.

(3) Vapor Purging:

After removing any liquid product, the vapor remaining in the UST shall be displaced by adding solid carbon dioxide (dry ice) to the tank in the amount of at least 0.25 ounces per gallon of tank capacity. The dry ice shall be crushed and distributed evenly over the greatest possible area in the tank to promote rapid evaporation. With the exception of the tank vent, the Contractor shall plug as many tank openings as possible after introducing the dry ice. As the dry ice evaporates, flammable vapors will flow out of the tank and may surround the area. Therefore, the Contractor shall conduct air monitoring around the tank as indicated below. All dry ice must evaporate before proceeding with UST excavation and removal. Alternate vapor purging methods will not be permitted without prior approval from the Engineer.

(4) Atmosphere Testing:

The atmosphere inside the UST and around the excavation area shall be regularly tested by the Contractor for flammable or combustible vapor concentrations until the tank is removed from both the excavation area and the site. Such tests are to be made with a combustible gas indicator provided by the Contractor which is properly calibrated and maintained according to the manufacturer's instructions. Contractor personnel responsible for testing must be completely familiar with the use of the instrument and the interpretation of the instrument's readings.

The atmosphere inside the UST shall be tested by placing the combustible gas indicator probe into the fill opening after the drop tube has been removed. If the tank is equipped with a non-removable fill tube, readings shall be taken through another suitable opening. Readings shall be taken at the bottom, middle and upper portions of the tank, and the instrument shall be cleared after each reading. Liquid product must not enter the probe. All readings must be 20 percent or less of the lower explosive limit (LEL) before the tank is considered safe for removal from the ground. The Contractor shall also use an oxygen indicator to monitor the oxygen concentration in the tank(s).

(5) Excavation and Removal Provisions:

Excavation and removal practices shall be acceptable to the Engineer, shall ensure the safety of persons, equipment and structures that are to remain, and shall provide adequate protection of the environment. The Contractor shall schedule excavation and removal activities to minimize delays and construction traffic on-site.

The Contractor shall furnish and employ such shores, braces, pumps, etc., as may be necessary for the protection of property, proper completion of the work and the safety of the public and employees of the Contractor and the Department.

Excavation by machinery shall be discontinued when excavation approaches pipes, conduits or other underground structures. The work shall be completed in these areas by use of hand tools.

The Contractor shall excavate test pits when necessary to determine the exact location of tank(s), pipe(s) or other underground structure.

For structures not scheduled for demolition, any holes resulting from the removal of vent pipe brackets, return and supply pipes, or other conduits removed or abandoned as a part of excavation and removal activities shall be plugged with cement masonry.

The Contractor shall saw cut pavement in a neat and workman-like manner anywhere partial pavement removal is necessary to complete the work.

The Contractor shall prevent surface waters from entering the tank excavation area(s) at all times.

The Contractor shall assist in tank grave confirmation sampling by providing equipment and an operator to collect excavation bottom and side-wall soil. **After collection of samples, the Contractor shall allow the excavations to remain open pending the receipt of laboratory analytical results by the Engineer.** The Contractor shall backfill the excavations immediately upon notification in writing by the Engineer. Any additional excavation beyond that necessary for UST removal shall be as directed by the Engineer. Any tank grave that cannot be backfilled before the end of the day shall be adequately protected by the Contractor. This includes the use of safety fencing or other appropriate barricade to prevent individuals or vehicles from falling into excavations, orange flashing hazard lighting along the fencing, or other lighting considered necessary by the Engineer.

Excavation areas (tank grave areas, piping removal areas, soil removal areas, etc.) shall be backfilled to grade with surplus suitable excavated "clean fill" materials from the project. Any additional fill material required to bring the subsurface area to grade shall conform to Article 2.13 of the Standard Specifications. Prior to placement of fill materials, areas to be filled shall be free of standing water, frost, frozen material, trash and debris.

After fill placement and compaction, the Contractor shall grade surface to meet adjacent contours and provide flow to surface drainage structures. Grading shall not create any depressions that can retain water, create any diversions to surface flow, or block the intended flow of surface water.

For excavations conducted in areas where bituminous concrete or asphalt were cut/removed to facilitate access to the UST, the Contractor shall restore the paved surfaces to equal or better quality than before disturbance. All pavement markings disturbed during construction shall be restored.

(6) Disposal Procedures:

Scrap metal (tanks, piping, etc) generated during the demolition process shall be recycled as scrap metal at an approved scrap metal recycling facility following cleaning.

Non-hazardous, non-metallic waste shall be recycled off site or disposed of at a landfill. The Contractor shall transport materials, including but not limited to concrete and asphalt removed from excavated USTs, and dispose/recycle off site as C&D bulky waste in accordance with the Connecticut Department of Energy and Environmental Protection (CTDEEP) Solid Waste management standards. The Contractor shall recycle as much C&D bulky waste as practical.

Excavated underground items shall not be reused or salvaged by the Contractor.

(7) Post-Excavation and Removal Submittals:

The Contractor shall provide the Engineer, within 30 days of completion of the excavation and removal work, a compliance package, which shall include, but not be limited to, the following:

1. Shipping papers from the approved solid waste bulky waste disposal/recycling facility indicating receipt and acceptance of C&D bulky waste debris.
2. Shipping papers and Certificates of Destruction/Recycling from the approved scrap metal recycling facility indicating receipt and acceptance of scrap metal debris (tank, piping, etc.).

Method of Measurement:

This item will be paid for at the contract lump sum price for "Removal and Disposal of Underground Tanks" complete. Materials associated with the excavation, removal and disposal of the UST, such as permits, equipment, disposal, etc. will not be measured for payment.

Basis of Payment:

The Contract price lump sum shall include all related necessary work and material associated with the excavation, removal and disposal of the UST, including, but not limited to permits, equipment, material recycling and disposal, air monitoring, backfill, fencing, barricades, and lighting. No additional payment will be made for shoring, bracing, pumping, bailing, or for material or equipment necessary for the satisfactory completion of the work.

Removal and disposal of residual liquid product from the UST will be in accordance with Item 0101143A – Handling and Disposal of Regulated Items.

Pay Item	Pay Unit
Removal and Disposal of Underground Tanks	LS

ITEM #0101000A – ENVIRONMENTAL HEALTH AND SAFETY

Description

Under this item, the Contractor shall establish protocols and provide procedures to protect the health and safety of its employees and subcontractors as related to the proposed construction activities performed within the Project Area. Work under this Item consists of the development and implementation of a written Health and Safety Plan (HASP) that addresses the relative risk of exposure to potential hazards associated with working around current and historic tank graves that will be encountered as part of this Project, including those related to cleaning and removal of gasoline and diesel fuel tanks and possible entry into confined spaces or excavations with the potential for vapors to accumulate. The HASP shall establish health and safety protocols that address the relative risk of exposure to regulated substances in accordance with 29 CFR 1910.120 and 29 CFR 1926.65. Such protocols shall only address those potential concerns directly related to site conditions.

Note: The Engineer will prepare a site-specific HASP, which is compatible with the Contractor's HASP and will be responsible for the health and safety of all Project Inspectors, Department employees and consulting engineers.

Materials

The Contractor must provide chemical protective clothing (CPC) and personal protective equipment (PPE) as stipulated in the Contractor's HASP during the performance of work in areas identified as potentially posing a risk to worker health and safety for workers employed by the Contractor and all subcontractors.

Construction Methods

A. Existing Information

The Contractor shall utilize all available information and existing records and data pertaining to chemical and physical hazards associated with any of the regulated substances identified in the environmental site investigations to develop the HASP. The documents containing this data are referenced in "Notice to Contractor – Environmental Investigations." Note that the Project Areas have been identified as Areas of Environmental Concern (AOECs). As indicated in the Notice to Contractor for this project, the chemical data obtained recently at the Hartford and Glastonbury Maintenance Facilities indicates impacts to the soil and ground water that include one or more of the following constituents of concern within the Project limits: volatile organic compounds (VOCs), polycyclic aromatic hydrocarbons (PAHs), extractable total petroleum hydrocarbons (ETPH), and metals. The detected concentrations were above their respective, applicable Connecticut Remediation Standard Regulations (RSRs) criteria.

B. General

The requirements set forth herein pertain to the provision of workers' health and safety as it relates to proposed Project activities when performed in the presence of hazardous or regulated materials or otherwise environmentally sensitive conditions. THE PROVISION OF WORKER HEALTH AND SAFETY PROTOCOLS, WHICH ADDRESS POTENTIAL AND/OR ACTUAL RISK OF EXPOSURE TO SITE SPECIFIC HAZARDS POSED TO CONTRACTOR EMPLOYEES, IS SOLELY THE RESPONSIBILITY OF THE CONTRACTOR.

The Contractor shall be responsible for the development, implementation and oversight of the HASP throughout the performance of work within the limits of the AOECs, as identified in the Contract Documents, and in other areas identified by the Engineer or by the HASP where site conditions may pose a risk to worker health and safety and/or the environment. **No physical aspects of the work within the AOECs shall begin until the HASP is reviewed by the Engineer and is determined to meet the requirements of the specifications. However, the Contract time, in accordance with Article 1.03.08, will begin on the date stipulated in the Notice to Proceed.**

C. Regulatory Requirements

All construction related activities performed by the Contractor within the limits of the AOECs or in other areas where site conditions may pose a risk to worker health and safety and/or the environment shall be performed in conformance with 29 CFR 1926, Safety and Health Regulations for Construction and 29 CFR 1910, Safety and Health Regulations for General Industry. Conformance to 29 CFR 1910.120, Hazardous Waste Site Operations and Emergency Response (HAZWOPER) may also be required, where appropriate.

D. Submittals

Three copies of the HASP shall be submitted to the Engineer within four (4) weeks after the Award of Contract or four (4) weeks prior to the start of any work in the AOECs, whichever is first, but not before the Award of the Contract.

The HASP shall be developed by a qualified person designated by the Contractor. This qualified person shall be a Certified Industrial Hygienist (CIH), Certified Hazardous Material Manager (CHMM), or a Certified Safety Professional (CSP). He/she shall have review and approval authority over the HASP and be identified as the Health and Safety Manager (HSM). The HASP shall bear the signature of said HSM indicating that the HASP meets the minimum requirements of 29 CFR 1910.120 and 29 CFR 1926.65.

The Engineer will review the HASP within four (4) weeks of submittal and provide written comments as to deficiencies in and/or exceptions to the plan, if any, to assure consistency with the specifications, applicable standards, policies and practices and appropriateness given

potential or known site conditions. Items identified in the HASP which do not conform to the specifications will be brought to the attention of the Contractor, and the Contractor shall revise the HASP to correct the deficiencies and resubmit it to the Engineer for determination of compliance with this item. The Contractor shall not be allowed to commence work activities in the AOECs, as shown on the Plans, or where site conditions exist which may pose a risk to worker health and safety and/or the environment, until the HASP has been reviewed and determined to conform to the requirements of this specification by the Engineer. **No claim for delay in the progress of work will be considered for the Contractor's failure to submit a HASP that conforms to the requirements of the Contract.**

E. HASP Provisions

1. General Requirements

The Contractor shall prepare a HASP covering all Project site work regulated by 29 CFR 1910.120(b)/1926.65(b) to be performed by the Contractor and all subcontractors under this Contract. The HASP shall establish in detail, the protocols necessary for the recognition, evaluation, and control of all hazards associated with each task performed under this Contract. The HASP shall address site-specific safety and health hazards of each phase of site operation and include the requirements and procedures for employee protection. The level of detail provided in the HASP shall be tailored to the type of work, complexity of operations to be performed, and hazards anticipated. Details about some activities may not be available when the initial HASP is prepared and submitted. Therefore, the HASP shall address, in as much detail as possible, all anticipated tasks, their related hazards and anticipated control measures.

The HASP shall interface with the Contractor's Safety and Health Program. Any portions of the Safety and Health Program that are referenced in the HASP shall be included as appendices to the HASP. All topics regulated by the 29 CFR 1910.120(b) (4) and those listed below shall be addressed in the HASP. **Where the use of a specific topic is not applicable to the Project, the HASP shall include a statement to justify its omission or reduced level of detail and establish that adequate consideration was given to that topic.**

2. Elements

a. Site Description and Contamination Characterization

The Contractor shall provide a site description and contaminant characterization in the HASP that meets the requirements of 29 CFR 1910.120/1926.65.

b. Safety and Health Risk Analysis/Activity Hazard Analysis

The HASP shall address the safety and health hazards on the sites for every operation to be performed. The Contractor shall review existing records and data to identify potential chemical and physical hazards associated with the site and shall evaluate their impact on field operations. Sources, concentrations (if known), potential exposure pathways, and other factors as noted in CFR 1910.120/126.65, paragraph (c)(7) employed to assess risk shall be described. The Contractor shall develop and justify action levels for implementation of engineering controls and personal protective equipment upgrades and downgrades for controlling worker exposure to the identified hazards. If there is no permissible exposure limit (PEL) or published exposure level for an identified hazard, available information from other published studies may be used as guidance. Any modification of an established PEL must be fully documented.

The HASP shall include a comprehensive section that discusses the tasks and objectives of the site operations and logistics and resources required to complete each task. The hazards associated with each task shall be identified. Hazard prevention techniques, procedures and/or equipment shall be identified to mitigate each of the hazards identified.

c. Staff Organization, Qualifications and Responsibilities

The HASP shall include a list of personnel expected to be engaged in site activities and certify that said personnel have completed the educational requirements stipulated in 29 CFR 1910.120 and 29 CFR 1926.65, are currently monitored under a medical surveillance program in compliance with those regulations, and that they are fit for work under “Level C” conditions.

The Contractor shall assign responsibilities for safety activities and procedures. An outline or flow chart of the safety chain of command shall be provided in the HASP. Qualifications, including education, experience, certifications, and training in safety and health for all personnel engaged in safety and health functions shall be documented in the HASP. Specific duties of each on-site team member should be identified. Typical team members include, but are not limited to Team Leader, Scientific Advisor, Site Safety Officer, Public Information Officer, Security Officer, Record Keeper, Financial Officer, Field Team Leader, and Field Team members.

The HASP shall also include the name and qualifications of the individual proposed to serve as Health and Safety Officer (HSO). The HSO shall have full authority to carry out and ensure compliance with the HASP. The Contractor shall provide a competent HSO on-site who is capable of identifying existing and potential hazards in the surroundings or working conditions which are unsanitary, hazardous or dangerous to employees and who has authorization to take prompt corrective measures to eliminate or control them. The qualifications of the HSO shall include completion of OSHA 40-hour HAZWOPER training, including current 8-hour refresher training, and 8-hour HAZWOPER Supervisor training; a minimum of one year of working

experience with the regulated compounds that have been documented to exist within Project limits; a working knowledge of federal and state safety regulations; specialized training or documented experience (one year minimum) in personal and respiratory protective equipment program implementation; the proper use of air monitoring instruments, air sampling methods and procedures; and certification training in first aid and CPR by a recognized, approved organization such as the American Red Cross.

The primary duties of the HSO shall be those associated with worker health and safety. The Contractor's HSO responsibilities shall be detailed in the written HASP and shall include, but not be limited to the following:

i. Directing and implementing the HASP;

ii. Ensuring that all Project personnel have been adequately trained in the recognition and avoidance of unsafe conditions and the regulations applicable to the work environment to control or eliminate any hazards or other exposure to illness or injury (29 CFR 1926.21). All personnel shall be adequately trained in procedures outlined in the Contractor's written HASP;

iii. Authorizing Stop Work Orders, which shall be executed upon the determination of an imminent health and safety concern;

iv. Contacting the Contractor's HSM and the Engineer immediately upon the issuance of a Stop Work order when the HSO has made the determination of an imminent health and safety concern;

v. Authorizing work to resume, upon approval from the Contractor's HSM;

vi. Directing activities, as defined in the Contractor's written HASP, during emergency situations; and

vii. Providing personal monitoring where applicable, and as identified in the HASP.

d. Employee Training Assignments

The Contractor shall develop a training program to inform employees, supplier's representatives, and official visitors of the special hazards and procedures (including PPE, its uses and inspections) to control these hazards during field operations. Official visitors include but are not limited to Federal Agency Representatives, State Agency Representatives, Municipal Agency Representatives, Contractors, subcontractors, etc. This program shall be consistent with the requirements of 29 CFR 1910.120 and 29 CFR 1926.65.

e. Personal Protective Equipment

The plan shall include the requirements and procedures for employee protection and should include a detailed section on respiratory protection. The Contractor shall describe in detail and provide appropriate PPE to insure that workers are not exposed to levels greater than the action level for identified hazards for each operation stated for each work zone. The level of protection shall be specific for each operation and shall be in compliance with all requirements of 29 CFR 1910 and 29 CFR 1926. The Contractor shall provide, maintain, and properly dispose of all PPE.

f. Medical Surveillance Program

All onsite Contractor personnel engaged in 29 CFR 1910.120/1926.65 operations shall have medical examinations meeting the requirements of 29 CFR 1910.120(f) prior to commencement of work.

The HASP shall include certification of medical evaluation and clearance by the physician for each employee engaged in 29 CFR 1910.120/1926.65 operations at the site.

g. Exposure Monitoring/Air Sampling Program

The Contractor shall submit an Air Monitoring Plan as part of the HASP, which is consistent with 29 CFR 1910.120, paragraphs (b)(4)(ii)(E), (c)(6), and (h). The Contractor shall identify specific air sampling equipment, locations, and frequencies in the air-monitoring plan. Air and exposure monitoring requirements shall be specified in the Contractor's HASP. The Contractor's CIH shall specify exposure monitoring/air sampling requirements after a careful review of the contaminants of concern and planned site activities.

h. Site Layout and Control

The HASP shall include a map, work zone delineation (support, contamination, reduction and exclusion), on/off-site communications, site access controls, and security (physical and procedural).

i. Communications

Written procedures for routine and emergency communications procedures shall be included in the Contractor's HASP.

j. Personal Hygiene, Personal Decontamination and Equipment Decontamination

Decontamination facilities and procedures for PPE, sampling equipment, and heavy equipment shall be discussed in detail in the HASP.

k. Emergency Equipment and First Aid Requirements

The Contractor shall provide appropriate emergency first aid kits and equipment suitable to treat exposure to the hazards identified, including chemical agents. The Contractor will provide personnel that have certified first aid/CPR training on-site at all times during site operations.

l. Emergency Response Plan and Spill Containment Program

The Contractor shall establish procedures in order to take emergency action in the event of immediate hazards (i.e., a chemical agent leak or spill, fire or personal injury). Personnel and facilities supplying support in emergency procedures will be identified. The emergency equipment to be present on-site and the Emergency Response Plan procedures, as required 29 CFR 1910.120, paragraph (1)(1)(ii) shall be specified in the Emergency Response Plan. The Emergency Response Plan shall be included as part of the HASP. This Emergency Response Plan shall include written directions to the closest hospital as well as a map showing the route to the hospital for each of the Project locations.

m. Logs, Reports and Record Keeping

The Contractor shall maintain safety inspections, logs, and reports, accident/incident reports, medical certifications, training logs, monitoring results, etc. All exposure and medical monitoring records are to be maintained according to 29 CFR 1910 and 29 CFR 1926. The format of these logs and reports shall be developed by the Contractor to include training logs, daily logs, weekly reports, safety meetings, medical surveillance records, and a phase-out report. These logs, records, and reports shall be maintained by the Contractor and be made available to the Engineer.

The Contractor shall immediately notify the Engineer of any accident/ incident. Within two working days of any reportable accident, the Contractor shall complete and submit an accident report to the Engineer.

n. Confined Space Entry Procedures

Confined space entry procedures, both permit required and non permit required, shall be discussed in detail.

o. Pre-Entry Briefings

The HASP shall provide for pre-entry briefings to be held prior to initiating any site activity and at such other times as necessary to ensure that employees are apprised of the HASP and that this plan is being followed.

p. Inspections/Audits

The HSM or HSO shall conduct inspections or audits to determine the effectiveness of the HASP. The Contractor shall correct any deficiencies in the effectiveness of the HASP.

F. HASP Implementation

The Contractor shall implement and maintain the HASP throughout the performance of work. In areas identified as having a potential risk to worker health and safety, and in any other areas deemed appropriate by the HSO, the Contractor shall be prepared to immediately implement the appropriate health and safety measures, including but not limited to the use of PPE, and engineering and administrative controls.

If the Engineer observes deficiencies in the Contractor's operations with respect to the HASP, they shall be assembled in a written field directive and given to the Contractor. The Contractor shall immediately correct the deficiencies and respond, in writing, as to how each was corrected. Failure to bring the work area(s) and implementation procedures into compliance will result in a Stop Work Order and a written directive to discuss an appropriate resolution(s) to the matter. When the Contractor demonstrates compliance, the Engineer shall remove the Stop Work Order. If a Stop Work Order has been issued for cause, no delay claims on the part of the Contractor will be honored.

Disposable CPC/PPE (i.e. disposable coveralls, gloves, etc.) that come in direct contact with hazardous or potentially hazardous material shall be placed into 55 gallon USDOT 17-H drums and disposed of in accordance with federal, state, and local regulations. The drums shall be temporarily staged and secured within a secure area of the Project, to be approved by the Engineer, for management by others.

G. HASP Revisions

The HASP shall be maintained on-site by the Contractor and shall be kept current with construction activities and site conditions under this Contract. The HASP shall be recognized as a flexible document which shall be subject to revisions and amendments, as required, in response to actual site conditions, changes in work methods and/or alterations in the relative risk present. All changes and modifications shall be signed by the Contractor's HSM and shall require the review and acceptance by the Engineer prior to the implementation of such changes.

Should any unforeseen hazard become evident during the performance of the work, the HSO shall bring such hazard to the attention of the Contractor and the Engineer as soon as possible. In the interim, the Contractor shall take action, including Stop Work Orders and/or upgrading PPE as necessary, to re-establish and maintain safe working conditions and to

safeguard on-site personnel, visitors, the public and the environment. The HASP shall then be revised/amended to reflect the changed condition.

Method of Measurement

A. Within thirty (30) calendar days of the award of the Contract, the Contractor shall submit to the Engineer for acceptance a breakdown of its lump sum bid price for this Item detailing:

   1. The development costs associated with preparing the HASP in accordance with these Specifications.

   2. The cost per month for the duration of the Project to implement the HASP and provide the services of the HSM and the HSO.

B. If the lump sum bid price breakdown is unacceptable to the Engineer, substantiation showing that the submitted costs are reasonable shall be required.

C. Upon acceptance of the payment schedule by the Engineer, payments for work performed will be made as follows:
   1. The lump sum development cost will be certified for payment.

   2. The Contractor shall demonstrate to the Engineer monthly that the HASP has been kept current and is being implemented and the monthly cost will be certified for payment.

   3. Any month where the HASP is found not to be current or is not being implemented, the monthly payment for the Environmental Health and Safety Item shall be deferred to the next monthly payment estimate. If the HASP is not current or being implemented for more than thirty calendar days, there will be no monthly payment.

   4. <u>Failure of the Contractor to implement the HASP in accordance with this Specification, shall result in the withholding of all Contract payments.</u>

Basis of Payment

This work shall be paid for at the Contract lump sum price for "ENVIRONMENTAL HEALTH AND SAFETY," which shall include all materials, tools, equipment and labor incidental to the completion of this item for the duration of the Project to maintain, revise, monitor and implement the HASP. Such costs include providing the services of the HSM and HSO, Contractor employee training, CPC, PPE, disposal of PPE and CPC, medical surveillance, decontamination facilities, engineering controls, monitoring and all other HASP protocols and procedures established to protect the Health and Safety for all on-site workers.

Pay Item	Pay Unit
Environmental Health and Safety	Lump Sum

ITEM #0101117A – CONTROLLED MATERIALS HANDLING

Description:

Work under this Item is intended to provide specific procedural requirements to be followed by the Contractor during the excavation of Controlled Materials from the Areas of Environmental Concern (AOECs). Controlled Materials consisting of non-hazardous levels of regulated substances and potentially hazardous regulated substances (Hartford Maintenance Facility) have been documented to exist within the Project limits. Such contamination is documented in the reports listed in the "Notice to Contractor – Environmental Investigations." This supplements Specifications Sections 2.02, 2.03, 2.05, and 2.06 and Contract Special Provisions for excavation wherever contaminated materials are encountered. Work under this item shall include transporting and stockpiling materials from both Project locations (Glastonbury and Hartford Maintenance Facilities) to the waste stockpile area (WSA) to be established at the Glastonbury Maintenance Facility, as shown on Drawing ENV-003 of the Project Plans; and covering, securing, and maintaining the stockpiled/stored materials throughout the duration of the Project.

All materials, excluding the existing pavement structure (asphalt and subbase), rock, ledge, and concrete, excavated within the AOECs are to be considered Controlled Materials. Where contaminated soils are excavated, such soil will not be reusable as backfill unless authorized by the Engineer in writing, and will require special handling, disposal and documentation procedures as specified in Item 0202315A, "Disposal of Controlled Materials" and/or Item 0101126A "Disposal of Hazardous of Hazardous Waste."

Glastonbury Maintenance Facility

Prior to any intrusive activities, the WSA will need to be established at the location shown on the plans. The WSA shall be constructed in accordance with Item No. 0101128A "Securing, Construction and Dismantling of a Waste Stockpile and Treatment Area."

Soils excavated from the designated AOECs and/or any impacted soils identified by the Engineer during the removal of the underground storage tanks (USTs) will be considered Controlled Material. Controlled Material shall be staged on-site in the WSA and managed in accordance with the procedures presented herein.

Metals were the only constituents of concern detected in the soils outside the area designated as an AOEC. The reported concentrations were low compared to their respective RSR criteria and likely represent background concentrations. Therefore, the soils excavated outside of the AOEC for the installation of the new tank systems or other project related site improvements will not require material handling measures beyond those required for normal construction operations. These soils shall remain segregated from those specifically identified as impacted soils by the Engineer as well as from subbase material excavated as a part of project construction and shall be utilized as fill/backfill within the Project limits, in accordance with the following conditions:

1. Such soil is deemed to be structurally suitable for use as fill by the Engineer;
2. Such soil is not placed below the water table;
3. Such soil is not placed in an area subject to erosion.

Excavated soils deemed suitable for reuse are to be reused on-site before other soils and/or fill such that materials requiring off-site disposal are minimized. Provisions will be made should there be excess material excavated outside of the AOEC that cannot be reused within the Project limits.

Hartford Maintenance Facility

Due to the Hartford Maintenance Facility's location within a Flood Control Zone, excavated Controlled Materials will not be permitted to be stockpiled on-site. Therefore, prior to any intrusive activities, an off-site WSA will need to be established at the location shown on the plans. The off-site WSA shall be constructed in accordance with Item No. 0101128A "Securing, Construction and Dismantling of a Waste Stockpile and Treatment Area."

Following the removal of the USTs, any impacted soils identified during the site investigation will require remediation by excavation and be managed as Controlled Material. In addition, any soil excavated for the installation of the new motor fuel AST system and site improvements shall be managed as Controlled Material. Site soils shall not be reused as backfill in any new utility trenches unless explicitly directed to do so by the Engineer.

Materials:

The required materials are detailed on the Project Plans. All materials shall conform to the requirements of the Contract.

Polyethylene plastic sheeting for underlayment shall be at least 30 mils thick and a minimum width of 10 feet. Polyethylene plastic sheeting for covering excavated material shall be a thickness of 10 mils. and a minimum width of 10 feet.

Sandbags used to secure polyethylene covers shall be at least 30 pounds.

Runoff control barrier shall be constructed with hay bales (14 inches x 36 inches x 18 inches, typical).

Sorbent booms shall be 8 inches in diameter and 10 feet long and possess petrophilic and hydrophobic properties. Sorbent booms shall also have devices (i.e., clips, clasps, etc.) for connection to additional lengths of boom.

Construction Methods:

A. General

When Controlled Materials are encountered during the course of the work, health and safety provisions shall conform to the appropriate sections of the Contract. Provisions may include implementation of engineering controls, air and personal monitoring, the use of chemical protective clothing (CPC), personal protective equipment (PPE), and decontamination procedures.

Unless otherwise directed by the Engineer, materials removed from the excavation within the AOECs shall be transported directly from their point of origin on the Project to the WSA. The stockpiles of excavated Controlled Materials shall be maintained as shown on the Project Plans. The Contractor shall plan excavation activities within the AOECs in consideration of the capacity of the WSA and the material testing and disposal requirements of the applicable Contract item. **No claims for delay shall be considered based on the Contractor's failure to coordinate excavation activities as specified herein.**

The Engineer will sample the stockpiled Controlled Materials at a frequency and for the constituents to meet the acceptance criteria of the treatment/recycling/disposal facilities submitted by the Contractor. The Contractor is hereby notified that laboratory turnaround time is expected to be fifteen (15) working days. Turnaround time is the period of time beginning when the Contractor notifies the Engineer which facility it intends to use and that the bin is full and the stockpile is ready for sampling, and ending with the Contractor's receipt of the laboratory analytical results. Any change of intended treatment/recycling/ disposal facility may prompt the need to resample and will therefore restart the time required for laboratory turnaround. The laboratory will furnish such results to the Engineer. Upon receipt, the Engineer will make available to the Contractor the results of the final waste characterization determinations. **No delay claim will be considered based upon the Contractor's failure to accommodate the laboratory turnaround time as identified above.**

B. Transportation and Stockpiling

In addition to following all pertinent federal, state and local laws or regulatory agency policies, the Contractor shall adhere to the following precautions during transport of non-hazardous Controlled Materials:

1. Transported Controlled Materials are to be covered prior to leaving the point of generation and are to remain covered until the arrival at the WSA;

2. All vehicles departing the site are properly logged to show the vehicle identification, driver's name, time of departure, destination, and approximate volume and content of

materials carried;

3. All vehicles are to have secure, watertight containers free of defects for material transportation;

4. No material shall leave the area of excavation until there is adequate lay-down area prepared in the respective WSA; and

5. Documentation must be maintained indicating that applicable laws have been satisfied and that the materials have been successfully transported and received at the WSA staging area.

Construction of the WSA shall be completed prior to the initiation of construction activities generating Controlled Materials. Plastic polyethylene sheeting shall underlay all excavated Controlled Materials. Measures shall be implemented to divert rainfall away from the WSA.

Placement of sorbent boom along the perimeter of the WSA shall be conducted when soil is saturated with petroleum product.
Excavated materials shall be staged as shown on the Project Plans or as directed by the Engineer.

C. WSA Maintenance

The Contractor shall provide all necessary materials, equipment, tools and labor for anticipated activities within the WSA. Such activities include, but are not limited to, handling and management of stockpiled soil and drummed CPC/PPE; uncovering and re-covering stockpiles; maintenance of the WSA; replacement of damaged components (e.g., sand bags, plastic polyethylene sheeting, etc.); and waste inventory record management. The Contractor shall manage all materials in the WSA in such a way as to minimize tracking of potential contaminated materials across the site and off-site, and minimize dust generation.

Each stockpile shall be securely covered when not in active use with a cover of sufficient size to prevent generation of dust and infiltration of precipitation. The cover shall be maintained, as necessary, to prevent wind erosion. Additionally, the Runoff Control Barrier shall be in-place with hay bales placed end-to-end to prevent the release of stored materials in the event of cover failure.

The staged stockpiles shall be inspected at least daily by the Contractor to ensure that the cover and containment have not been damaged and that there is no apparent leakage from the piles. If the cover has been damaged, or there is evidence of leakage from the stockpiles, the Contractor shall immediately replace the cover or containment as needed to prevent the release of materials to the environment from the piles.

An inventory of stockpiled/staged materials and drummed CPC/PPE shall be conducted on a daily basis. Inventory records shall indicate the approximate volume of material/drums stockpiled per day; the approximate volume of material/drums stockpiled to date; material/drums loaded and transported off-site for disposal; any materials loaded and transported for on-site reuse; and the identification of stockpiled materials relative to their points of generation.

Following the removal of all stockpiled Controlled Materials, residuals shall be removed from surfaces of the WSA as directed by the Engineer. This operation shall be accomplished using dry methods such as shovels, brooms, mechanical sweepers or a combination thereof. Residuals shall be disposed of as Controlled Materials.

D. Dewatering

Dewatering activities shall conform to Items in pertinent articles of the Contract.

E. Decontamination

All equipment shall be provided to the work site free of contamination. The Engineer may prohibit from the site any equipment that in his opinion has not been thoroughly decontaminated prior to arrival. Any decontamination of the Contractor's equipment prior to arrival at the site shall be at the expense of the Contractor. The Contractor is prohibited from decontaminating equipment on the Project that has not been thoroughly decontaminated prior to arrival.

The Contractor shall furnish labor, materials, tools and equipment for decontamination of all equipment and supplies that are used to handle Controlled Materials. Decontamination shall be conducted at an area designated by the Engineer and may be required prior to equipment and supplies leaving the Project, between stages of the work, or between work in different AOECs.

Dry decontamination procedures are recommended. Residuals from dry decontamination activities shall be collected and managed as Controlled Materials. If dry methods are unsatisfactory as determined by the Engineer, the Contractor shall modify decontamination procedures as required, subject to the Engineer's approval.

F. Dust Control

The Contractor shall implement a fugitive dust suppression program in accordance with the Contract to prevent the off-site migration of particulate matter and/or dust resulting from excavation, loading and operations associated with Controlled Materials. It shall be the Contractor's responsibility to supervise fugitive dust control measures and to monitor airborne particulate matter. The Contractor shall:

1. Employ reasonable fugitive dust suppression techniques.

2. Visually observe the amounts of particulate and/or fugitive dust generated during the handling of Controlled Materials. If the apparent amount of fugitive dust and/or particulate matter is not acceptable to the Engineer, the Engineer may direct the Contractor to implement corrective measures at his discretion, including, but not limited to, the following:

   a. Apply water to pavement surfaces;

   b. Apply water to equipment and excavation faces; and

   c. Apply water during soil excavation, loading and dumping.

G. Permit Compliance

The Contractor shall comply with the terms and conditions of the CTDEEP "General Permit for Contaminated Soil and/or Sediment Management (Staging and Transfer)," including the General Operating Conditions and the Specific Operating Conditions, except that the Engineer will conduct all soil characterization and perform all record keeping. In particular, the Contractor shall:

1. Operate, maintain and repair the WSA in conformance with the requirements of the General Permit.

2. Maintain a communications system capable of summoning fire, police, and/or other emergency service personnel.

3. Prevent unauthorized entry onto the stockpiles by the use of fences, gates, or other natural or artificial barriers.

4. Separate incidental excavation waste to the satisfaction of the receiving facility or to an extent that renders the contaminated soil and/or sediment suitable for its intended reuse.

5. Isolate and temporarily store incidental waste in a safe manner prior to off-site transport to a facility lawfully authorized to accept such waste.

6. Not store more than 100 cubic yards of incidental waste at any one time.

7. Sort, separate and isolate all hazardous waste from contaminated soil.

8. Prevent or minimize the transfer or infiltration of contaminants from the stockpiles to the ground as detailed in "B. Transportation and Stockpiling," above.

9. Securely cover each stockpile of soil as detailed in "C. WSA Maintenance," above.

10. Minimize wind erosion and dust transport as detailed in "F. Dust Control," above.

11. Use anti-tracking measures at the WSA to ensure the vehicles do not track soil from the WSA onto a public roadway at any time.

12. Instruct the transporters of contaminated soil of best management practices for the transportation of such soil (properly covered loads, removing loose material from dump body, etc.).

13. Control all traffic related to the operation of the facility in such a way as to mitigate the queuing of vehicles off site and excessive or unsafe traffic impact in the area where the facility is located.

14. Ensure that except as allowed in Section 22A-174-18(b)(3)(C) of the Regulations of Connecticut State Agencies, trucks are not left idling for more than three (3) consecutive minutes.

H. Material Tracking

The Contractor shall employ all methods necessary to prevent material from being tracked beyond the excavation area. This includes but is not limited to the use of anti-tracking pads and frequently sweeping the area as necessary to prevent the material from being tracked off-site. The route from the excavations to the WSA shall be cleaned daily, or as directed by the Engineer to remove any Controlled Material debris lost in transit. The Contractor shall also use all means necessary to prevent material and water generated from the excavation from entering the on-site drainage system.

Method of Measurement:

The work of "CONTROLLED MATERIAL HANDLING" will be measured for payment by the number of cubic yards of Controlled Material excavated within the AOECs and taken to the WSA. This measurement shall be in accordance with and in addition to the quantity measured for payment of the applicable excavation item in Specification Sections 2.02, 2.03, 2.05, 2.06, or the Contract Special Provisions, as applicable. Excess excavations made by the Contractor beyond the payment limits specified in the Contract will not be measured for payment and the Contractor assumes all costs associated with the appropriate handling, management and disposal of this material.

Basis of Payment:

This work will be paid for at the Contract unit price, which shall include transportation from the excavation sites to the WSA, including any intermediate handling steps; stockpiling Controlled Materials at the WSA; covering, securing, and maintaining the individual stockpiles within the WSA throughout the duration of the Project; and all tools, equipment, material and labor incidental to this work.

ITEM #0101117A

This price shall also include equipment decontamination; the collection of residuals generated during decontamination and placement of such material in the WSA; and the collection and disposal of liquids generated during equipment decontamination activities.
All materials, labor and equipment associated with compliance with the "General Permit for Contaminated Soil and/or Sediment Management (Staging and Transfer)" will not be measured separately, but will be considered incidental to the item "Controlled Materials Handling."

Pay Item	Pay Unit
Controlled Materials Handling	C.Y.

ITEM #0101126A – DISPOSAL OF HAZARDOUS WASTE

Description:

Work under this item shall consist of the loading, transportation and final off-site disposal of materials containing hazardous concentrations of RCRA-regulated substances, as defined in 40 CFR Parts 261-265 or in CGS Section 22a-449 (Hazardous Waste), excluding dewatering fluids, that may be generated from excavations within an Area of Environmental Concern (AOEC). Soils containing arsenic and lead have been identified in the excavation areas within the Project limits at the Hartford Maintenance Facility. Soils excavated within the Project limits shall be handled as Controlled Materials in accordance with the soil management protocols presented in the "Notice to Contractor – Environmental Investigations." Once the storage bin at the designated off-site waste stockpile area (WSA) is full, waste characterization in accordance with Item 0202315A, "Disposal of Controlled Materials," will be performed on the stored material. In the event that excavated materials are determined to be contaminated with regulated substances at hazardous concentrations, the transportation, and disposal of Hazardous Waste shall be conducted under this Item. These materials shall be transported in their existing lined containers by a licensed hazardous waste transporter and disposed of at an EPA-permitted and Department-approved hazardous waste landfill within 90 days from the date of its generation.

The Contractor must use one or more of the following Department-approved disposal facilities for the disposal of Hazardous Waste:

Clean Earth of North Jersey, Inc. 115 Jacobus Avenue South Kearny, NJ 07105 Attn: Cheryl Coffee Phone: (732) 541-8909 Fax: (732) 541-8105	Clean Harbors Environmental Services, Inc. 2247 South Highway 71 Kimball, NE 69145 Attn: Dorothy Hall Phone: (308) 235-4012 Fax: (308) 235-4307
Clean Harbors of Braintree, Inc. 1 Hill Avenue Braintree, MA 02184 Attn: John Mattson Phone: (781) 380-7100 Fax: (781) 380-7193	Cycle Chem 217 South First Street Elizabeth, NJ 07206 Attn: Gordon Mayfield Phone: (908) 354-0210 Fax: (908) 355-0562
Envirite of PA 730 Vogelsong Road York, PA 17404 Attn: Dick Foxx Phone: (717) 846-1900 Fax: (717) 854-6757	Environmental Quality Company Wayne Disposal Facility 49350 North I-94 Service Drive Belleville, MI 48111 Attn: Erin Gore Phone: (734) 697-2200 Fax: (734) 699-3499

EnviroSafe Corp Northeast (f.n.a Jones Environmental Services) 263 Howard Street Lowell, MA 01852 Attn: Michael J. Hoye Phone: (978) 453-7772 Fax: (978) 453-7775	Heritage Hazardous Waste Landfill (Heritage Environmental Services, LLC) 4370 West County Road 1275N Roachdale, IN 46172 Attn: Steve Cross Phone: (315) 406-9342; Fax: (315) 687-3898
Northland Environmental, Inc. 275 Allens Avenue Providence, RI 02905 Attn: John Stiller Phone: (401)781-6340 Fax: (401) 781-9710	Republic Environmental Systems 2869 Sandstone Drive Hatfield, PA 19440 Attn: Mathew Smith Phone: (215) 822-8995 Fax: (215) 997-1293
Stablex, Canada, Inc. 760 Industrial Boulevard Blainville, Quebec J7C 3V4 Attn: Claude Forte Phone: (450) 430-9230 Fax: (450) 430-4642	Soil Safe, Inc. 378 Route 130 Logan Township, Bridgeport, NJ 08085 Attn: George Dohn Phone: (410) 872-3990; Fax: (410) 872-9082

Construction Methods:

A. Submittals:

The Contractor shall submit in writing, within seven (7) days after discovery of hazardous concentrations of regulated substances in the excavated Controlled Material:

1. A letter listing the names of the hazardous waste disposal facilities (from the above list) that the Contractor will use to receive Hazardous Material from this Project;

2. A copy of the attached "Disposal Facility Material Acceptance Certification" form from each facility, which shall be signed by an authorized representative of each disposal facility;

3. A copy of each facility's acceptance criteria and sampling frequency requirements; and

4. A letter listing the name(s) of the hazardous waste transporters that the Contractor will use to transport Hazardous Material from this Project.

No facility may be substituted for the one(s) designated in the Contractor's submittal without the Engineer's prior approval. If the material cannot be accepted by any of the Contractor's designated facilities, the Department will supply the Contractor with the name(s) of other acceptable facilities.

Disposal Facility Materials Acceptance Certification

Project Number _____

Project Location_____

Facility Name_____ Telephone_____

Facility Address_____ Fax_____

_____

_____

The Contractor has supplied the analytical data contained in the reports concerning the site investigation performed by the Department. I have personally reviewed this data and intend to accept the following:

Hazardous materials as described in Item 0101126A, "Disposal of Hazardous Waste" for the subject Project at a cost of $ _____per ton for disposal and an additional $_____ per ton for transportation from the Project to the facility (if applicable).

This intent to accept the material will be subject to and dependent upon the facility's subsequent evaluation of the waste characterization documentation to be provided to the Contractor by the Engineer.

Authorized Facility
Representative_____/_____
Printed/Typed Name Title

_____/_____
Signature Date

Note: The facility shall attach the acceptance criteria and facility sampling frequency requirements to this document.

DO NOT ALTER FORM IN ANY WAY. FORM MUST BE COMPLETED IN ENTIRETY.

B. Material Disposal

The Contractor shall obtain and complete all paperwork necessary to arrange for material disposal, including disposal facility waste profile sheets. It is solely the Contractor's responsibility to coordinate the disposal of Hazardous Waste with its selected disposal facility(ies). Upon receipt of the final approval from the facility, the Contractor shall arrange for the loading, transport and disposal of the Hazardous Waste in accordance with all federal and state regulations. **No claim will be considered based on the failure of the Contractor's disposal facility(ies) to meet the Contractor's production rate or for the Contractor's failure to select sufficient facilities to meet its production rate.**

All hazardous waste manifests utilized to accompany the transportation of the waste material shall be prepared by the Contractor and signed by an authorized Department representative, as Generator, for each truck load of material that leaves the site. The Contractor shall forward the appropriate original copies of all manifests to the Engineer the same day the material leaves the Project site.

A load-specific certificate of disposal, signed by the authorized agent representing the waste disposal facility, shall be obtained by the Contractor and promptly delivered to the Engineer for each load.

C. Material Transportation

Excavated materials determined to be hazardous shall be transported in compliance with the applicable federal regulations. Transport vehicles shall not have any indentations or damage and must be free from leaks, and discharge openings must be securely closed during transportation.

In addition to all pertinent federal, state and local laws or regulatory agency polices, the Contractor shall adhere to the following precautions during the transport of Hazardous Waste off-site:

1. All vehicles departing the site are to be properly logged to show the vehicle identification, driver's name, time of departure, destination, and approximate volume, and contents of materials carried;

2. No materials shall leave the site unless a disposal facility willing to accept all of the material being transported has agreed to accept the type and quantity of waste;

3. Documentation must be maintained indicating that all applicable laws have been satisfied and that the materials have been successfully transported and received at the disposal facility; and

4. The Contractor shall segregate the waste streams (i.e., soils, debris, etc.) as directed by the receiving disposal facility.

D. Equipment Decontamination

All equipment shall be provided to the work site free of gross contamination. The Engineer may prohibit from the site any equipment that in his opinion has not been thoroughly decontaminated prior to arrival. Any decontamination of the Contractor's equipment prior to arrival at the site shall be at the expense of the Contractor. The Contractor is prohibited from decontaminating equipment on the Project that has not been thoroughly decontaminated prior to arrival.

The Contractor shall furnish labor, materials, tools and equipment for decontamination of all equipment and supplies that are used to handle Hazardous Waste. Decontamination shall be conducted at an area designated by the Engineer and shall be required prior to equipment and supplies leaving the Project, between stages of the work, and between work in different AOECs.

The Contractor shall use dry decontamination procedures. Residuals from dry decontamination activities shall be collected and managed as Hazardous Waste. If the results from dry methods are unsatisfactory to the Engineer, the Contractor shall modify decontamination procedures as required.

The Contractor shall be responsible for the collection and disposal of any liquid wastes that may be generated by its decontamination activities in accordance with applicable regulations.

E. EPA ID Number

Within seven (7) days from the date on which the Contractor discovers Controlled Materials with hazardous concentrations of regulated substances, the Contractor shall notify the Engineer of its selected transporter and disposal facility. The Engineer will then obtain an EPA ID number that he will forward to the Contractor. Any changes in transporter or facility shall be immediately forwarded to the Engineer for review.

Method of Measurement:

The work of "DISPOSAL OF HAZARDOUS WASTE" will be measured for payment as the actual net weight in tons of material delivered to the disposal facility. Such determinations shall be made by measuring each hauling vehicle on the certified permanent scales at the disposal facility. Total weight will be the summation of weight bills issued by the facility specific to this Project.

Equipment decontamination, the collection of residuals, and the collection and disposal of liquids generated during equipment decontamination activities will not be measured separately for payment.

Basis of Payment:

This work will be paid for at the Contract unit price, which shall include the loading and transportation of Hazardous Waste from the existing temporary WSA to the disposal facility and the disposal of such materials; the preparation of manifests and fees paid; and all equipment, materials, tools, and labor incidental to loading, transporting, and disposal of materials. **This unit price will be applicable to all of the Contractor-selected disposal facilities for the duration of the Project.**

This price shall also include equipment decontamination; the collection of residuals generated during decontamination and placement of such material in the WSA; and the collection and disposal of liquids generated during equipment decontamination activities.

Pay Item	Pay Unit
Disposal of Hazardous Waste	Ton

ITEM #0101128A – SECURING, CONSTRUCTION AND DISMANTLING OF A WASTE STOCKPILE AND TREATMENT AREA

Description:

Work under this Item shall consist of the securing, construction and dismantling of the temporary Waste Stockpile Area at the locations designated on the Project Plans (Drawing ENV-003) and in accordance with the Contract. All Controlled Materials excavated during construction activities at the Hartford Project site shall be stockpiled in the WSA. The WSA shown on the Plans is to be used exclusively for temporary stockpiling of excavated materials from within Project AOECs for determination of disposal classification.

Materials:

The required materials are detailed on the Project Plans. All materials shall conform to the requirements of the Contract.

Construction blocks shall be solid precast rectangular concrete 6 feet in length, 3 in width, and 2 feet in height.

Polyethylene plastic sheeting for underlayment shall be a thickness of 30 mils and minimum width of ten feet.

Sand bags used to secure polyethylene sheeting soil covers shall have a minimum weight of thirty pounds.

Bedding sand shall conform to Section 6.51.02 of the Specifications.

Processed Aggregate Base shall conform to Section 3.04.02 of the Specifications.

Hay bales shall conform to the requirements of Section 2.18.02 of the Specifications.

Bituminous Concrete shall conform to Section 4.06.02 of the Specifications.

Precast Concrete Barrier Curb shall conform to Section 8.22 of the Specifications.

Construction Methods:

The WSA shall be constructed in accordance with the Contract at the locations shown on the Project Plans.

Construction of the WSA shall be completed prior to the initiation of construction activities generating Controlled Materials. The Contractor is responsible for the maintenance and protection of all utilities potentially affected during WSA construction. The Contractor shall locate and mark all existing utilities potentially affected prior to initiating WSA construction.

The proposed location of the WSA shall be cleared of any debris and vegetation as directed by the Engineer. Any objectionable materials, which may result in damage to the polyethylene sheeting underlayment, shall be removed prior to stockpiling excavated Controlled Materials.

The Contractor shall comply with the terms and conditions of the CTDEEP *General Permit for Contaminated Soil and/or Sediment Management (Staging and Transfer*), including the General Operating Conditions and the Specific Operating Conditions, except that the Engineer will conduct all soil/sediment characterization and perform all record keeping. In particular, the Contractor shall:

1. Construct and repair the WSA in conformance with the requirements of the General Permit.
2. Prevent unauthorized entry onto the stockpiles by the use of fences, gates, or other natural or artificial barriers.
3. Install anti-tracking measures at the WSA to ensure the vehicles do not track soil from the WSA onto a public roadway at any time.
4. Post and maintain a sign that is visible from a distance of at least 25’ at the WSA identifying the name of the permittee (State of CT, Department of Transportation), the DOT field office phone number, the hours of operation for the WSA, and the phrase, “Temporary Soil Staging Area”. Lettering shall be at least one inch (1”) high with a minimum overall sign dimension of four (4) feet wide by two (2) feet high. Such sign is only required if the capacity of the WSA is equal to or greater than 1,000 cubic yards. If initially the WSA capacity is less than 1,000 c.y. and the WSA capacity is subsequently increased, the Contractor shall post and maintain the required sign at no additional cost to the State, prior to stockpiling the additional material.

Following the removal of all stockpiled material, the Contractor shall use dry decontamination procedures for all surfaces of the WSA as directed by the Engineer. Residual materials shall be disposed of as Controlled Materials. If the results from dry methods are unsatisfactory to the Engineer, the Contractor shall modify decontamination procedures as required.

The Contractor shall be responsible for the collection and treatment/recycling/disposal of any liquid wastes that may be generated by its decontamination activities in accordance with applicable regulations.

Upon completion of the Project and following removal of all residual Controlled Materials, the Contractor shall dismantle the WSA and return the area to original condition. During dismantling, the Contractor shall remove all materials such as polyethylene sheeting and sand bags. Materials shall be disposed of by the Contractor as solid waste in accordance with the Contract and all Federal, State and local regulations.

Operation and maintenance of the WSA shall be included under Item 101117A "Controlled Material Handling."

Method of Measurement:

This work will be measured for payment at the Lump Sum cost for securing, construction, and dismantling of a WSA.

Basis of Payment:

This work will be paid for at the Contract Lump Sum, which shall include all materials, tools, labor, equipment, permits, and work needed to secure, construct, decontaminate and dismantle the WSA, including all clearing, grubbing, grading, clean up, site restoration and seeding.

All materials, labor and equipment associated with compliance with the *General Permit for Contaminated Soil and/or Sediment Management (Staging and Transfer)* will not be measured separately, but will be considered incidental to the item "Securing, Construction and Dismantling of a Waste Stockpile and Treatment Area".

Pay Item	Pay Unit
Securing, Construction and Dismantling Of a Waste Stockpile and Treatment Area	L.S.

ITEM #0101143A – HANDLING AND DISPOSAL OF REGULATED ITEMS

Description:

Work under this item shall include the management of regulated items and all associated work by persons who are knowledgeable, qualified and trained in the handling and disposal of these materials/items and the subsequent cleaning of the affected environment. Regulated items include hazardous and other materials and wastes, the disposal of which is restricted by federal and/or state laws and regulations and which may be within the underground storage tanks (USTs), aboveground storage tank (AST), and hydraulic lift system to be removed from the Sites. In addition, items or material containing regulated or hazardous waste may be present in the facility boilier room at the Gla stonbury Maintenance Facility. Regulated items include those listed herein, or additional similar items identified on site by the Engineer. Work under this item does not include asbestos-containing materials, lead paint or contaminated soils.

Activities shall be performed in accordance with, but not limited to, the current revision of the USEPA and CTDEEP Hazardous Waste Regulations (40 CFR 260-282, 22a-209 and 22a-449(c)), USEPA PCB Regulations (40 CFR 761), USEPA Protection of Stratospheric Ozone (40 CFR 82), OSHA Hazard Communication (29 CFR 1910.1200), OSHA Hazardous Waste & Emergency Response Regulations (29 CFR 1910.120), USDOT Hazardous Materials Regulation (49 CFR 171-180), OSHA, RCRA, CERCLA, CAA, TSCA, and all other laws and regulations.

The work activities include the removal, handling, packing, labeling, transport, manifesting and recycling or disposal of liquids and/or sludges contained in two (2) USTs and a hydraulic lift at the Hartford facility, and three (3) USTs and an AST at the Glastonbury facility, to be excavated and removed from the site. The contents of these storage tanks include gasoline, diesel fuel, fuel oil and propane.

This Item also includes the handling and disposal of wastewaters generated from dewatering activities directed by the Engineer in efforts to achieve compliance with the UST Regulations. However, it excludes any wastewaters generated during general construction activities, which would be addressed under a CTDEEP General Discharge Permit.

In addition, there may be materials containing regulated or hazardous waste associated with the demolition and replacement of the two boilers at the Glastonbury facility. Such items include: mercury gauges and switches, fluorescent lamps and ballast, and boiler ash.

Note: For the Propane AST, all liquid product must be removed by a State of Connecticut licensed LP Gas vendor. The vessel shall then be allowed to vent to the atmosphere to enable all remaining propane vapor to be released. Following sufficient time for ventilation, the Contractor shall conduct testing within the vessel to ensure adequate purging has occurred.

The Contractor is responsible for verifying actual locations and quantities of the items with hazardous/regulated material/waste constituents and for their proper handling and disposal. The recycling or proper disposal, as appropriate, of all regulated items shall be completed prior to the initiation of any UST removal activities.

Materials:

All materials shall be suitable for the management of regulated items and shall meet all applicable federal, state and local regulations. Such materials include, but are not limited to, proper containers, packing materials, labels, signs, shipping papers, personnel protective equipment (PPE) and spill kits.

Construction Methods:

A. Allowable Disposal/Recycling Facilities

Disposal facilities for RCRA-hazardous, TSCA-hazardous, Connecticut Regulated Waste (CRW), and Universal wastes shall be selected from among those listed below. No other facility shall be used for these types of wastes without the written approval of the Engineer.

Advanced Disposal Services Greentree Landfill* 635 Toby Road Kersey, PA 15846 Phone: (814) 265-1744 Fax: (814) 265-8745 MSW, C&D, asbestos, PCB remediation waste <50 ppm, petroleum contaminated soils, nonhazardous solid wastes	Allied Waste Niagara Falls Landfill, LLC 5600 Niagara Falls Blvd. Niagara, NY 14304 Phone: (716) 285-3344 Fax: (716) 285-3398 Non-hazardous waste, industrial solid waste, municipal sewage treatment sludge, contaminated soil & debris, asbestos waste, C&D debris, industrial process sludge
American Lamp Recycling, LLC 26 Industrial Way Wappingers Falls, NY 12590 Phone: (845) 896-0058 Fax: (845) 896-1520 Mercury containing devices, universal waste	Clean Earth of Carteret 24 Middlesex Ave.., Carteret, NJ 07008 Phone: (732) 541-8909 Fax: (732) 541-8505 Concrete, brick, block, street sweepings, stone, rock, asphalt and petroleum contaminated soil

Clean Earth of Philadelphia, Inc. 3201 South 61 St., Philadelphia, PA 19153 Phone: (732) 541-8909 Fax: (732) 541-8505 Petroleum contaminated soil	Clean Earth of North Jersey, Inc. (aka CENJ) 115 Jacobus Ave, South Kearny, NJ 07105 Phone: (732) 541-8909 Fax: (732) 541-505 RCRA liquid and solid, asbestos
Clean Harbors of Braintree, Inc. 1 Hill Avenue Braintree, MA 02184 Phone: (781) 380-7100 Fax: (781) 380-7193 RCRA, TSCA & CRW Gas, Liquid, Solid, Sludge	Clean Harbors of Connecticut, Inc. 51 Broderick Road Bristol, CT 06010 Phone: (860) 583-8917 Fax: (860) 585-1740 RCRA TSCA & CRW Gas, Liquid, Solid, Sludge
Clean Harbors Environmental Services, Inc. Cleveland Facility 2900 Rockefeller Ave., Cleveland, OH 44115 Phone: (216) 429-2401 Fax: (216) 883-1918 RCRA liquid: aqueous organic & inorganic wastewater	Clean Harbors Environmental Services, Inc. 2247 South Hwy. 71, Kimball, NE 69145 Phone: (308) 235-4012 Fax: (308) 235-4307 RCRA liquid, solid & sludge
Clean Harbors of Baltimore, Inc. 1910 Russell St, Baltimore, MD 21230 Phone: (410) 244-8200 Fax: (410) 752-2647 RCRA liquid: aqueous organic & inorganic wastewater	Clean Harbors of Woburn (Murphy's Waste Oil Serv., Inc.) 252 Salem Street Woburn, MA 01801 Phone: (781) 935-9066 Fax: (781) 935-8615 RCRA, CRW: Oil, Oil/Water Mixtures, Oil Filters, Oily Soil and Debris, F001/F002 Contaminated Oils, Antifreeze
Clinton Landfill 242 Church Street Clinton, MA 01510 Phone: (978) 365-4110 Fax: (978) 365-4106 Comm-97 Soils and other materials subject to a BUD and additional review by MADEP.	Colonie Landfill (Waste Connections, Inc.) 1319 Louden Rd, Cohoes, New York 12047 Phone: (518) 783-2827 Fax: (518) 786-7331 Non-hazardous wastes, special wastes, contaminated soil
Cumberland County Landfill (aka Community Refuse Services Managed by Interstate Waste Services) 135 Vaughn Road, Shippensburg, PA 17257 Phone: (717) 729-2060 Fax: (717) 423-6822 Municipal solid waste, non-hazardous waste	Cycle Chem (aka General Chemical Corp.) 217 South First Street, Elizabeth, NJ 07206 Phone: (908) 355-5800 Fax: (908) 355-0562 RCRA, TSCA liquid and solid

Envirite of PA 730 Vogelsong Road, York, PA 17404 Phone: (717) 846-1900 Fax: (717) 854-6757 RCRA hazardous wastes	Environmental Quality Company: Wayne Disposal Facility (aka EQ Michigan Disposal Waste Treatment Plant and Wayne Disposal Inc. Site #2) 49350 North I-94 Service Drive Belleville, MI 48111 Phone: (734) 697-2200 Fax: (734) 699-3499 RCRA & TSCA liquid and solid
Environmental Quality Detroit Inc. 1923 Frederick Street, Detroit MI 48211 Phone: (734) 329-8017 Fax: (313) 923-3375 RCRA & CRW liquid wastewater	Environmental Soil Management of New York, LLC (ESMI of New York) 304 Towpath Road, Fort Edward, NY 12828 Phone: (518) 747-5500 Fax: (518) 747-1181 Petroleum contaminated soil
Environmental Soil Management of NH 67 International Dr., Loudon, NH 03307 Phone: (603) 783-0228 Fax: (603) 783-0104 Petroleum contaminated soil	EnviroSafe Corporation Northeast (formerly Jones Environmental Services, soon to be Triumvirate) 263 Howard Street, Lowell, MA 01852 Phone: (978) 453-7772 Fax: (978) 453-7775 RCRA & TSCA liquid and solid
Hazelton Creek Properties, LLC* (Hazelton Mine Reclamation Project) 280 South Church St., Hazelton, PA 18201 Phone: (570) 574-1010 Fax: (570) 457-3395 Fresh, brackish or marine dredge material, coal ash, cement kiln dust, lime kiln dust, co-generator ash, regulated fill	Heritage Hazardous Waste Landfill (Heritage Environmental Services, LLC) 4370 W County Rd 1275 N Roachdale, IN 46172 Phone: (315) 406-9342 Fax: (315) 687-3898 Hazardous Wastes, Asbestos

Manchester Landfill 311 Olcutt St., Manchester, CT 06040 Phone: (860) 647-3248 Fax: (860) 647-3238 Municipal solid waste, non-hazardous waste, contaminated soil	Mostoller Landfill (Managed by Interstate Waste Services) 7095 Glades Pike, Summerset, PA 15501 Phone: (717) 729-2060 Fax: (814) 444-0127 Municipal solid waste, C&D debris, residual waste, sewage sludge, incinerator ash, asbestos
Northeast Lamp Recycling, Inc. 250 Main Street, East Windsor, CT 06088 Phone: (860) 292-1992 Fax: (860) 292-1114 CRW solid waste, mercury containing devices & universal waste	Northland Environmental, Inc. (PSC Environmental Syst) 275 Allens Ave Providence, RI 02905 Phone: (401) 781-6340 Fax: (401) 781-9710 RCRA Liquid and Solid Organics, Oils, Solvents, Pesticides, Chlorinated Hydrocarbons, empty drums
Ontario County Landfill (Managed by Casella Waste) 3555 Post Farm Road, Stanley, NY 14561 Phone: (585) 526-4420 Fax: (585) 526-5459 Municipal solid waste, non-hazardous waste solid, special wastes including asbestos, ash from boilers/incinerators, contaminated soil, demo debris	Paradise Heating Oil, Inc. Quimby Street, Ossining, NY 10562 Phone: (631) 926-2576 Fax: (718) 294-2226 CRW waste oil liquid

Phoenix Soil LLC 58 North Washington Street Plainville, CT 06062 Phone: (860) 747-8888 Fax: (203) 757-4933 Petroleum contaminated soil	Republic Environmental Systems (aka Philip Services Corporation (PSC) Republic)* 2869 Sandstone Dr., Hatfield PA 19440 Phone: (215) 822-2676 Fax: (215) 822-1293 RCRA & TSCA industrial solid & sludge, aqueous waste, contaminated soil, PCB waste, oil & petroleum waste, organic waste
Soil Safe, Inc. 378 Route 130, Logan Township, Bridgeport NJ 08085 Phone: (410) 872-3990 x1120 Fax: (410) 872-9082 Soil contaminated with petroleum or metals, some industrial waste solids	Stablex Canada, Inc. 760 Industrial Blvd. Blainville Quebec J7C 3V4 Phone: (450) 430-9230 Fax: (450) 430-4642 RCRA liquid and solid, industrial wastes
Ted Ondrick Company, LLC 58 Industrial Road, Chicopee, MA 01020 Phone: (413) 592-2566 Fax: (413) 592-7451 Petroleum contaminated soil	Tradebe Environmental Services, Inc. 50 Cross Street Bridgeport, CT 06610 Phone: (888) 276-0887 Fax: (203)238-6772 RCRA and CRW Waste Oil, Fuel, Wastewater
Tradebe Environmental Services, Inc. 136 Gracey Avenue Meriden, CT 06451 Phone: (888) 276-0887 Fax: (203)238-6772 RCRA, CRW Waste Oil, Fuel, Wastewater	Tunnel Hill Reclamation 2500 Township Road, 205 Route 2 New Lexington, OH 43764 Phone: (914) 713-0203 Fax: (914) 713-0672 Municipal solid waste, non-hazardous waste, contaminated soils

Upton Site Remediation, LLC (formerly Upton Landfill) Maple Avenue, Upton, MA 01568 Phone: (413) 522-3688 Fax: (413) 522-3330 Contaminated soil for use as cover material under MADEP COMM-97 policy	Waste Management RCI Fitchburg Landfill Fitchburg Princeton Road, Westminster, MA 01473 Phone: (978) 355-6821 Fax: (978) 355-6317 Solid: MSW, non-hazardous waste, C&D, contaminated soil for use as cover material under MADEP COMM-97 policy
Waste Management of New Hampshire TLR III Refuse Disposal Facility P.O. Box 7065 90 Rochester Neck Road Rochester, NH 03839 Phone: (603) 330-2197 Fax: (603) 330-2130 Solid: MSW, C&D, PCB remediation waste (<50ppm), virgin petroleum contaminated soil, CRW solid waste	

* - Please note that if this facility is to be used, each bin letter will require an additional 10 day (or more) waiting period on top of the 15 day lab period designated in the Specifications to allow for Pennsylvania Department of Environmental Protection (PADEP) review.

Note: The category of material accepted by each facility listed above is for informational purposes only. The Contractor shall verify facility acceptance of each type of regulated item.

B. Submittals

Thirty (30) days prior to commencement of work involving the management of regulated items, the Contractor shall submit to the Engineer for approval, the following documentation:

1. Copy of current Spill Contractor Permit registration issued by the CTDEEP.
2. Hazard communication training for all employees performing this work.
3. Names of the treatment facilities, recycling facilities and/or disposal facilities the Contractor intends to use to receive each type of regulated item.
4. Names of the Hazardous Material Transporter(s) the Contractor intends to use to transport hazardous materials from this Project.
5. Copy of current Hazardous Material Transporter USDOT Certificate of Registration for each transporter.

6. Copy of current Hazardous Waste Transporter Permit for the State of Connecticut, the destination state(s), and all other applicable states for each transporter.

One (1) week prior to the start of work that will generate RCRA hazardous waste above conditionally exempt small quantities, the Contractor shall obtain from the Engineer a temporary EPA Hazardous Waste Generator ID number, for use in manifesting the waste.

C. Regulated Item Management Provisions

1. General Requirements

The Contractor's OSHA Competent Person shall be in control on the job site at all times during hazardous material management work activities. This person must be capable of identifying existing hazards, possess the authority to implement corrective measures to reduce/eliminate the hazards, comply with applicable federal, state and local regulations that mandate work practices, and be capable of performing the work of this contract. All employees who perform regulated material management related work shall be properly trained and qualified to perform such duties.

All labor, materials, tools, equipment, services, testing, insurance and incidentals necessary or required to perform the work in accordance with applicable governmental regulations, industry standards and codes, and these specifications shall be provided by the Contractor.

The Contractor shall be responsible for verification of all field conditions affecting performance of the work. The Contractor shall submit to the Engineer for concurrence any additional items not listed herein that it believes to be regulated items included under this item. However, compliance with applicable requirements is solely the responsibility of the Contractor.

Environmental sampling shall be conducted as deemed necessary by the Engineer. Spill areas shall be cleaned by the Contractor until accepted by the Engineer. The Engineer may sample the spill area to demonstrate Contractor compliance with an acceptable standard.

2. Personnel Protection

Prior to commencing work, the Contractor shall provide hazard communication training to all employees as necessary in accordance with OSHA 29 CFR 1926.59 and 29 CFR 1910.1200 and instruct all workers in all aspects of personnel protection, work procedures, emergency procedures and use of equipment, including procedures unique to this project. Worker health and safety protocols that address potential and/or actual risk of exposure to site specific hazards are solely the responsibility of the Contractor.

The Contractor shall provide respiratory protection that meets the requirements of OSHA as required in 29 CFR 1910.134 and 29 CFR 1926.1000. A formal respiratory protection program, including appropriate medical surveillance, must be implemented in accordance with OSHA standards. The Contractor shall, as necessary, conduct exposure assessment air sampling, analysis and reporting to ensure the workers are afforded appropriate respiratory protection.

The Contractor shall provide and require all workers to wear appropriate personal protective equipment, including protective clothing and respiratory protection, as required, within regulated work areas which exceed OSHA Personnel Exposure Limits (PELs) or when handling hazardous waste.

3. Regulated Item Management Work Procedures

Prior to beginning work on-site, the Contractor shall prepare waste characterization profile forms for each type of waste stream to be generated and forward such forms to the Engineer for review, approval and signature on behalf of ConnDOT. Upon approval, the Contractor shall forward such forms to the appropriate disposal facilities for acceptance.

The Contractor shall utilize all appropriate engineering controls and safety and protective equipment while performing the work in accordance with ConnDOT, OSHA, USEPA, USDOT, CTDEEP and Connecticut Department of Public Health (DPH) regulations.

The Contractor shall employ work practices so as to minimize the disturbance of the constituents in the regulated items, and prevent breakage and spills. In the event of a spill, the Contractor shall cordon off the area and notify the Engineer. The Contractor is responsible to have spills and the affected areas decontaminated to the acceptance of the Engineer by personnel trained in hazardous waste operator emergency response.

The Contractor shall carefully and properly remove, handle, pack, label and manifest all of the regulated items in waste containers specified and suitable to contain the waste in accordance with all federal and state regulations.

Prior to transportation and recycling and/or disposal, all proper ConnDOT, USEPA, OSHA, CTDEEP and USDOT labels and placards shall be affixed to the waste containers and hazardous materials shipping papers, such as waste manifests and bills of lading, shall be completed.

4. Waste Disposal

Efforts shall be made to recycle the constituents of the regulated items rather than dispose of them, in accordance with the waste minimization efforts required under RCRA.

The Contractor shall forward the appropriate originals of shipping papers to the Engineer the same day the regulated items leave the project site. All vehicles departing the site transporting hazardous materials shall display proper USDOT placards, as appropriate for the type of waste being transported.

5. Project Closeout Documents:

   Within thirty (30) days of completion of the on-site project work, the Contractor shall submit to the Engineer copies of the following completed documents:

   a. Hazardous Waste Manifests
   b. Waste Shipment Records/Bills of Lading
   c. Recycling Receipts

All of these documents must include the signature of an authorized disposal facility representative acknowledging receipt of hazardous materials.

Method of Measurement:

The work of "Handling and Disposal of Regulated Items" shall be provided for in accordance with Article 1.04.05 – Extra Work.

Basis of Payment:

The work of "Handling and Disposal of Regulated Items" shall be paid for in accordance with Article 1.04.05 – Extra Work, which price shall include the management, removal, handling, packing, labeling, transport, manifesting, recycling or disposal of the regulated constituents in the specific equipment/items scheduled for impact at the project site, and all equipment, materials, tools and labor incidental to the work.

Final payment will not be made until completed copies of the specified Project Closeout Documents have been provided to the Engineer. Once completed and facility-signed copies have been received in their entirety, the Engineer will approve the final payment.

Pay Item	Pay Unit
Handling and Disposal of Regulated Items	Est.

ITEM #0101185A – REMOVAL OF HYDRAULIC SYSTEM

Description:

Work under this item shall include all activities related to the removal and disposal of an underground twin-post hydraulic truck lift assembly and its associated components (i.e., reservoir tank, piping, pumps, lift covers, steel framework, etc.). The lift consists of one fixed-post and one traveling post. All excavations and post travel-pits shall be backfilled and the concrete slab restored.

The work shall be performed by an experienced firm that has successfully completed hydraulic lift removal and disposal work similar to that indicated herein.

All activities shall be performed in accordance with USEPA 40 CFR Parts 260-268, OSHA 29 CFR 1926, OSHA 29 CFR 1910.120, CTDEEP 22a-449(d)-1 and 22a-449(c), and all other applicable state and federal regulations and codes.

Materials:

Backfill material shall conform to the requirements of Section 2.13 of the Specifications or as indicated in the Contract documents.

Concrete work shall conform to Section 03300 – Cast-in-Place Concrete and as indicated on the contract Drawings. All abandoned floor and wall penetrations shall be filled with cement grout, or hydraulic cement in wet locations.

Construction Methods:

(1) Pre-Removal Submittals:

At least fifteen (15) working days prior to the start of any lift system removal and disposal work, the Contractor shall submit the following to the Engineer for review and approval:

1. Proposed removal procedures to be utilized, including protective/safety measures to be implemented.
2. Proposed C&D bulky waste disposal facility.
3. Proposed steel/scrap metal recycling facility.

(2) General Provisions:

The Contractor shall clean (removal of hydraulic fluid, sludges and residuals), remove and dispose of the underground twin-post hydraulic lift, as indicated on the Plans.

Removal and disposal shall include the removal of all appurtenances associated with the hydraulic lifts (reservoir tank, piping and pumps, conduits, etc.). Removal shall also include disconnection of any electrical service associated with the hydraulic system, the removal of residual fluids and cleaning of the post travel-pit prior to backfilling and concrete restoration.

Disposal of petroleum products and waters from within the pistons/post, travel-pit, tank and piping structures shall be performed by the Contractor in accordance with Item 0101143A – Handling and Disposal of Regulated Items.

The Contractor shall exercise all necessary precautions for fire prevention. Acceptable fire extinguishers shall be made available at all times. Flame/torch cutting is prohibited.

The Contractor shall prevent damage to any existing utilities, structures, equipment and appurtenances that are to remain in service.

(3) Removal Provisions:

Removal practices shall be acceptable to the Engineer, shall ensure the safety of persons, equipment and structures that are to remain, and shall provide adequate protection of the environment. The Contractor shall schedule excavation and removal activities to minimize delays and interference with facility operations.

The Contractor shall furnish and employ such braces, pumps, etc., as may be necessary for the protection of property, proper completion of the work, and the safety of the public and employees of the Contractor and the Department.

Excavation by machinery shall be discontinued when excavation approaches pipes, conduits or other underground structures. The work shall be completed in these areas by use of hand tools.

The Contractor shall saw-cut the concrete slab in a neat and workman-like manner anywhere concrete removal is necessary to complete the work.

Following the removal of the lift, the Contractor shall excavate any impacted soil, as directed by the Engineer, to achieve compliance with Connecticut's Remediation Standard Regulations (RSRs). Any impacted materials encountered during excavation activities shall be managed in accordance with Item 0101117A, "Controlled Materials Handling."

The Contractor shall assist in the collection of post-removal confirmation sampling by providing equipment and an operator to collect excavation bottom and side-wall soils. After collection of samples, the Contractor shall allow the excavation to remain open pending the receipt of laboratory analytical results by the Engineer. The Contractor shall protect on-site workers from the work area, particularly any open excavation, in a manner acceptable to the Engineer. The Contractor shall backfill the excavation immediately upon notification in writing by the Engineer. Any additional excavation beyond that necessary for hydraulic lift removal shall be as directed by the Engineer.

Any sub-grade piping containing hydraulic fluid that will remain in-place shall be emptied of all product and pneumatically tested to verify that the sub-grade piping is competent prior to capping and sealing. Piping shall be tested with air pressure no less than 25 pounds per square inch (psi) and maintained for no less than 30 minutes. Pressure testing shall be conducted in the presence of the Engineer. Product piping determined to be competent shall be cut at surface grade and sealed with cement masonry. Piping that does not maintain pressure will be evaluated by the Engineer and if removal is deemed necessary, additional provisions will be added to the Contract.

Any holes resulting from the removal of pipe brackets, return and supply pipes, or other conduits removed or abandoned as a part of removal activities shall be plugged with cement grout.

Excavation areas (lift removal areas, post travel-pits, piping removal areas, soil removal areas, etc.) shall be backfilled to sub-grade. If as determined by the Engineer, suitable surplus excavated materials exist, they shall be used prior to importing material to the project. Prior to placement of fill materials, areas to be filled shall be free of standing water, frost, frozen material, trash and debris.

Following completion of the placement of fill, the Contractor shall restore the hydraulic lift post excavation and any disturbed concrete surface resulting from the removal of the hydraulic system.

In the event a release of hydraulic fluid from the lift system has resulted in impacts to the soil and/or groundwater that cannot be removed due to site limitations (i.e., soil removal resin

(6) Disposal Procedures:

Scrap metal generated during the demolition process (pistons/posts, piping, etc.) shall be recycled as scrap metal at an approved scrap metal recycling facility following cleaning. Non-hazardous, non-metallic waste shall be recycled off-site or disposed of as C&D bulky waste in accordance with the Connecticut Department of Energy and Environmental Protection (CTDEEP) solid waste management standards. The Contractor shall recycle as much C&D bulky waste as practical.

Removed items shall not be reused or salvaged by the Contractor.

(7) Post-Removal Submittals:

The Contractor shall provide the Engineer, within 30 days of completion of the hydraulic lift removal work, a compliance package, which shall include, at a minimum:

1. Shipping papers and Certificates of Destruction/Recycling from the approved scrap metal recycling facility indicating receipt and acceptance of scrap metal debris (tank, piping, etc).

2. Shipping papers from the approved solid waste bulky waste disposal/recycling facility indicating receipt and acceptance of C&D bulky waste debris.

Method of Measurement:

Removal of Hydraulic System will be measured for payment by the number of hydraulic lift systems removed as shown on the Plans and directed by the Engineer.

Basis of Payment:

This work will be paid for at the Contract unit price per hydraulic lift system removed. This unit price shall include all related necessary work and material associated with the removal and disposal of the hydraulic lift assemblies, including, but not limited to: permits, equipment, material recycling and disposal, air monitoring, floor and wall patching, protection of on-site employees from the work site and temporary safety lighting. No additional payment will be made for other material or equipment necessary for the satisfactory completion of the work.

Removal and disposal of residual liquid product from the lift's hydraulic systems will be in accordance with Item 0101143A – Handling and Disposal of Regulated Items.

Pay Item	Pay Unit
Removal of Hydraulic System	Ea

ITEM #0177150A – GENERAL BUILDING RENOVATION

Description: Under this item, the Contractor shall complete all work depicted on the Contract Plans and described in the CSI-formatted Specifications that make up this Major Lump Sum Item (MLSI). Refer to Form 816 Article 1.20-1.02.04 for additional information in this regard.

Any work incidental to another bid item which is not specifically described or included in the bid item, but which is required for performance and completion of the work required under the Contract, shall be considered to be included under this item.

Materials: All materials shall be as required by the Contract Plans and as described in the CSI-formatted Specifications that make up this MLSI.

Construction Methods: All methods of construction shall conform to the requirements as stipulated in the CSI-formatted Specifications that make up this MLSI.

Method of Measurement: This item will be paid for at the contract lump sum price for "General Building Renovation" complete.

Basis of Payment: This item will be paid for at the contract lump sum price for "General Building Renovation", which price shall include all administrative and procedural requirements, material, equipment, labor, and work incidental thereto.

PAY ITEM	PAY UNIT
General Building Renovation	LS

ITEM #0202315A – DISPOSAL OF CONTROLLED MATERIALS

Description:

Work under this item shall consist of the loading, transportation, and final off-site treatment/ recycling/disposal of Controlled Materials (excluding dewatering fluids) that have been generated from excavation associated with the removal/closure of the underground storage tanks (USTs), brought to the temporary soil staging area, and are not suitable for reuse on the Project. The nature of this potentially contaminated material is documented in the reports listed in the "Notice to Contractor – Environmental Investigations." The Controlled Material, after proper characterization by the Engineer, shall be taken from the Controlled Material temporary waste stockpile area (WSA), loaded, transported to and treated/recycled/disposed at a permitted treatment/ recycle/disposal facility listed herein.

The Contractor must use one or more of the following Department-approved treatment/ recycle/disposal facilities for the disposal of non-hazardous soils:

Advanced Disposal Services Greentree* Landfill 635 Toby Road Kersey, PA 15846 814-265-1744; Don Henrichs	Allied Waste Niagara Fall Landfill, LLC 5600 Niagara Falls Blvd. Niagara, NY 14304 716-285-3398; David Hanson
Clean Earth of Carteret 24 Middlesex Avenue Carteret, NJ 07008 732-541-8909; Cheryl Coffee	Clean Earth of Philadelphia 3201 S. 61 Street Philadelphia, PA 19153 732-541-8909; Cheryl Coffee
Clean Earth of Southeast Pennsylvania, Inc. (AKA CESP) 7 Steel Road Morrisville, PA 19067 732-541-8909; Cheryl Coffee	Clinton Landfill 242 Church Street Clinton, MA 01510 978- 365-4110; Chris McGown
Colonie Landfill 1319 Louden Road Cohoes, NY 12047 518-951-0794: Eric Morales	Cranston Sanitary Landfill 1690 Pontiac Avenue Cranston, RI 02920 413-552-3688; Paul Mahoney
Cumberland County Landfill (aka Community Refuse Services - Managed by Interstate Waste Services) 135 Vaughn Road Shippensburg, PA 17257 717-423-9953; Kevin Bush	ESMI of New York 304 Towpath Road Fort Edward, New York 12828 (800) 511-3764; Peter Hanson

ESMI of New Hampshire 67 International Drive Loudon, NH 03307 (603) 783-0228; Stephen Raper	Hazelton Creek Properties, LLC* 280 South Church Street Hazelton, PA 18201 570-207-2000; Allen Swantek
Manchester Landfill 311 Olcott Street Manchester, CT 06040 860-647-3248; Brooks Parker	Mostoller Landfill (Managed by Interstate Waste Services) 7095 Glades Pike Summerset, PA 15501 814-444-0112; Scott Lambert
Ontario County Landfill (Managed by Casella Waste) 3555 Post Farm Road Stanley, NY 14561 603-235-3597; Scott Sampson	Phoenix Soil LLC 58 North Washington Street Plainville, CT 06062 (800) 586-4774; Sue Brenner
Red Technologies Soil 232 Airline Avenue Portland, CT 06980 860-342-1022; Christopher Windangle	Republic Services Conestoga Landfill* 420 Quarry Road Morgantown, PA 19543 717-246-4640; James Kuhn
Soil Safe, Inc. 378 Route 130 Logan Township, Bridgeport, NJ 08085 410-872-3990; George Dohn	Ted Ondrick Company, LLC 58 Industrial Road Chicopee, MA 01020 (413) 592-2566; Alan Desrosiers
Tunnel Hill Reclamation 2500 Township Road, 205 Route 2 New Lexington, OH 43764 914-713-0203; William Gay	Upton Landfill – Upton Site Remediation, LLC Maple Avenue Upton, MA 413-522-3688; Paul Mahoney
Waste Management: RCI Fitchburg Landfill Fitchburg Princeton Road Westminster, MA 01473 978-355-6821; Frank Sepiol	Waste Management of New Hampshire P.O. Box 7065 90 Rochester Neck Road Rochester, NH 03839 603-330-2170; Ellen Bellio

* - Please note that if this facility is to be used, each bin letter will require an additional 10 day (or more) waiting period in addition to the 15 day lab period designated in the Specifications to allow for Pennsylvania Department of Environmental Protection (PADEP) review.

The above list contains treatment/recycle/disposal facilities which can accept the waste stream generated by the project in quantities that may be limited by their permits and their operations restrictions. It is the responsibility of the contractor to verify that a facility will be available and

capable of handling the volume as well as the chemical and physical characteristics of material generated by the project.

Construction Methods:

A. **Material Disposal**

The Engineer will sample materials stored at the WSAs at a frequency established by the selected treatment/recycling/disposal facilities. The Contractor shall designate to the Engineer which facility it intends to use, as well as the facility acceptance criteria and sampling frequency, prior to samples being taken. The Contractor is hereby notified that laboratory turnaround time is expected to be fifteen (15) working days. Turnaround time is the period of time beginning when the Contractor notifies the Engineer which facility it intends to use and that the bin within the WSA is full and ready for sampling and ending with the Contractor's receipt of the laboratory analytical results. Any change of intended treatment/recycling/disposal facility may prompt the need to resample and will therefore restart the time required for laboratory turnaround. The laboratory will furnish such results to the Engineer. Upon receipt, the Engineer will make available to the Contractor the results of the final waste characterization determinations. **No delay claim will be considered based upon the Contractor′s failure to accommodate the laboratory turnaround time as identified above.**

The Contractor shall obtain and complete all paperwork necessary to arrange for material disposal (such as disposal facility waste profile sheets). It is solely the Contractor's responsibility to co-ordinate the disposal of controlled materials with its selected treatment/recycling/disposal facility(s). Upon receipt of the final approval from the facility, the Contractor shall arrange for the loading, transport and treatment/recycling/disposal of the materials in accordance with all Federal and State regulations. **No claim will be considered based on the failure of the Contractor's selected disposal facility(s) to meet the Contractor's production rate or for the Contractor's failure to select sufficient facilities to meet its production rate.**

Any material processing (including but not limited to the removal of woody debris, scrap metal, pressure-treated and untreated wood timber, large stone, concrete, polyethylene sheeting or similar material) required by the Contractor's selected facility will be completed by the Contractor prior to the material leaving the site. It is solely the Contractor's responsibility to meet any such requirements of its facility. Any materials removed shall be disposed of or recycled in a manner acceptable to the Engineer at no additional cost.

All manifests or bills of lading utilized to accompany the transportation of the material shall be prepared by the Contractor and signed by an authorized Department representative, as Generator, for each truck load of material that leaves the site. The Contractor shall forward the appropriate original copies of all manifests or bills of lading to the Engineer the same day the material leaves the Project.

A load-specific certificate of treatment/recycling/disposal, signed by the authorized agent representing the disposal facility, shall be obtained by the Contractor and promptly delivered to the Engineer for each load.

B. Material Transportation

In addition to all pertinent Federal, State and local laws or regulatory agency polices, the Contractor shall adhere to the following precautions during the transport of Controlled Materials off-site:

1. Transported Controlled Materials are to be covered sufficiently to preclude the loss of material during transport prior to leaving the site and are to remain covered until the arrival at the selected treatment/recycling/disposal facility.

2. All vehicles departing the site are to be properly logged to show the vehicle identification, driver′s name, time of departure, destination, and approximate volume, and contents of materials carried.

3. No materials shall leave the site unless a treatment/recycling/disposal facility willing to accept all of the material being transported has agreed to accept the type and quantity of waste.

C. Equipment Decontamination

All equipment shall be provided to the work site free of gross contamination. The Engineer may prohibit from the site any equipment that in his opinion has not been thoroughly decontaminated prior to arrival. Any decontamination of the Contractor's equipment prior to arrival at the site shall be at the expense of the Contractor. The Contractor is prohibited from decontaminating equipment on the Project that has not been thoroughly decontaminated prior to arrival.

The Contractor shall furnish labor, materials, tools and equipment for decontamination of all equipment and supplies that are used to handle Controlled Materials. Decontamination shall be conducted at an area designated by the Engineer and shall be required prior to equipment and supplies leaving the Project, between stages of the work, and between work in different AOECs.

The Contractor shall use dry decontamination procedures. Residuals from dry decontamination activities shall be collected and managed as Controlled Materials. If the results from dry methods are unsatisfactory to the Engineer, the Contractor shall modify decontamination procedures as required.

The Contractor shall be responsible for the collection and treatment/recycling/disposal of any liquid wastes that may be generated by its decontamination activities in accordance with applicable regulations.

Method of Measurement:

The work of "Disposal of Controlled Materials" will be measured for payment as the actual net weight in tons of material delivered to the treatment/recycling/disposal facility. Such determinations shall be made by measuring each hauling vehicle on the certified permanent scales at the treatment/recycling/disposal facility. Total weight will be the summation of weight bills issued by the facility specific to this Project. Excess excavations made by the Contractor beyond the payment limits specified in Specification Sections 2.02, 2.03, 2.05, 2.06, or the Contract Special Provisions (as appropriate) will not be measured for payment and the Contractor assumes responsibility for all costs associated with the appropriate handling, management and disposal of this material.

The disposal of excavated materials, originally anticipated to be Controlled Materials, but determined by characterization sampling not to contain concentrations of regulated chemicals (non-polluted or "clean" materials) will not be measured for payment under this item but will be considered as surplus excavated materials and will be paid in accordance with Article 1.04.05.

Any materials stored in the WSAs, and which are reused within Project limits, will not be measured for payment under this item. This material will be paid for in accordance with Article 1.04.05.

Equipment decontamination, the collection of residuals, and the collection and disposal of liquids generated during equipment decontamination activities will not be measured separately for payment.

Any material processing required by the Contractor-selected disposal facility, including the proper disposal of all removed materials, will not be measured for payment.

Basis of Payment:

This work will be paid for at the Contract unit price, which shall include the loading and transportation of Controlled Materials from the WSAs to the treatment/recycling/disposal facility; the fees paid to the facility for treatment/recycling/disposal; the preparation of all related paperwork; and all equipment, materials, tools, and labor incidental to this work. **This unit price will be applicable to all of the listed disposal facilities and will not change for the duration of the Project.**

This price shall also include equipment decontamination; the collection of residuals generated during decontamination and placement of such material in the WSA; and the collection and disposal of liquids generated during equipment decontamination activities.

Pay Item	Pay Unit
Disposal of Controlled Materials	Ton

ITEM #0202452A – TEST PIT

Description:
Work under this Item shall consist of the excavation and backfilling of test pits by the Contractor where it may be necessary to locate or examine drainage pipes, rock, public utilities, subsurface structures, or any other obstacles or conditions. Unless otherwise specified or ordered by the Engineer, the Contractor shall dig the test pit and all excavated material shall be placed back in the test pit hole and compacted in 6 inch layers. This work shall be done where directed and/or approved by the Engineer. All work shall be done in conformance with the applicable Safety Code.

Construction Methods:
The Contractor is hereby advised that underground utilities exist throughout the project work area. Test pits shall be dug where conflicts with utilities are anticipated, or as directed by the Engineer.

The Contractor shall coordinate the excavation of all test pits with the respective utility owners having facilities in the vicinity of the location of test pits. If so desired by the respective utility owners, all or part of the work under this item may be accomplished by their crews and/or supervised by them. The Contractor shall give sufficient notice to the respective utility owners to afford reasonable time for coordination.

Unless otherwise specified, the Contractor shall dig test pits where indicated by the Engineer and the Contractor shall notify the Engineer of the results at least 28 calendar days prior to the start of any underground installations within said test pit area. The Contractor shall notify the Engineer and/or utility companies of any conflict uncovered which may require design revisions, relocations and/or adjustments. No work shall be started within these areas of conflict until so authorized by the Engineer.

Test pit excavation shall have neat, clean cut and vertical sides.

The Contractor shall measure and record the size, configuration, and exact horizontal and vertical location of all utilities, pipes or other obstacles uncovered in the various pits dug under this item.

The Engineer shall be notified three (3) calendar days in advance of excavation, so that he also may make the necessary measurements to locate all objects within test pits.

Excavation of test pits shall be accomplished by such means as are required to ensure the underground utilities or structures that may be encountered are not damaged. It is the Contractor's sole responsibility for any damages incurred during excavation operations. Any such damages shall be repaired or replaced by them (if permitted) to the satisfaction of the Owner/Responsible Agency/Engineer at the Contractor's own expense. Where the repair and/or

replacement must be done by the Owner/Responsible Agency any and all costs thereof shall be borne by the Contractor.

Where existing pavement has been removed for the test pit excavation, the surface shall be restored to a condition equal or better than the original, as directed by the Engineer. When restoring the bituminous patch the tack coat shall be applied to the edges of the bituminous patch to ensure a lasting repair.

Measurement and Payment:
Test pits will be measured for payment and will be measured as each. The cutting of bituminous pavement, pavement or base removed under this item will not be measured for payment nor will the replacement pavement and subsequent replacement processed base material. Water removed will not be measured for payment.

Test pits dug by the respective utility owner will not be measured for payment.

Basis of Payment:
Payment under this item shall be made at the contract unit per each for "Test Pit", which price shall include the excavation of all materials as required. Included in the unit price will be excavation, sheeting, shoring, dewatering, backfilling, compaction and the restoration of the surface of the Test Pit, and all other materials, equipment, tools, labor and work incidental to, or necessary for the completion of the item.

Where a utility owner or company elects to perform all or part of the work under this item, no payment shall be made to either the Contractor of the participating utility for work performed by the utility under this Item, nor shall the Contract time be extended for any time lost due to poor coordination by the Contractor.

Pay Item	Pay Unit
Test Pit	EA.

ITEM # 0202452A

ITEM #0969070A – CONSTRUCTION FIELD OFFICE FURNISHINGS AND EQUIPMENT

Description: This item requires that all equipment, labor, materials, service contracts, maintenance, replacements, and incidental work necessary to maintain said equipment, be provided by the Contractor, for the duration of the work, and if necessary, for a close-out period determined by the Engineer. The equipment is for the exclusive use of CTDOT forces and others who may be engaged to augment CTDOT forces with relation to the contract. Ownership and liability of the equipment shall remain with the Contractor.

Materials/Supplies/Equipment: Materials, supplies and equipment shall be in like new condition and shall be approved by the Engineer.

General Requirements: This item does not include an office, but does include the equipment indicated below.

The Contractor shall provide the additional equipment and/or services described in this specification to the satisfaction of the Engineer.

The following equipment shall be provided:

QTY	Description:
1	Digital Camera as specified below under Computer Hardware and Software. All supplies and maintenance shall be provided by the Contractor.
1	Concrete Curing Box as specified below under Concrete Testing Equipment.
1	Concrete Air Meter as specified below under Concrete Testing Equipment.
1	Concrete Slump Cone as specified below under Concrete Testing Equipment.
0	Flip Phones as specified under Computer Hardware and Software.
1	Smart Phones as specified under Computer Hardware and Software.

The equipment required herein shall remain the property of the Contractor. Any supplies required to maintain or operate the equipment listed above shall be provided by the Contractor for the duration of the project at no additional charge.

Computer Hardware and Software: Digital Cameras, Flip Phones and Smart Phones must meet the requirements of this specification as well as the latest minimum specifications posted, as of the project advertising date, at Departments web site http://www.ct.gov/dot/cwp/view.asp?a=1410&q=563904

Within 10 calendar days after the signing of the Contract but before ordering/purchasing the Digital Camera(s), Flip Phones, or Smart Phones, the Contractor must submit a copy of their proposed order(s) with catalog cuts and specifications to the CTDOT Administering District for review and approval. The Contractor will be solely responsible for the costs of any equipment purchased without approval.

After the approval of the hardware, the Contractor must coordinate delivery with the administering Construction District.

The Contractor shall provide all supplies, maintenance, and repairs (including labor and parts) for the hardware, for the duration of the Contract. All repairs must be performed with-in 48 hours. If the repairs require more than a 48 hours then an equal or better replacement must be provided.

Repair(s) or replacement(s) of equipment for any reason shall be provided at no additional cost to the State.

Concrete Testing Equipment: If the Contract includes items that require compressive strength cylinders for concrete, in accordance with the Schedule of Minimum Testing Requirements for Sampling Materials for Test, the Contractor shall provide the following.

A) Concrete Cylinder Curing Box – meeting the requirements of Section 6.12 of the Standard Specifications.

B) Air Meter – The air meter provided shall be in good working order and will meet the requirements of AASHTO T 152.

C) Slump Cone Mold – Slump cone, base plate, and tamping rod shall be provided in like-new condition and meet the requirements of AASHTO T119, Standard Test Method for Slump of Hydraulic-Cement Concrete.

All testing equipment will remain the property of the Contractor at the completion of the project.

Method of Measurement: The furnishing and maintenance of the construction field office furnishings and equipment will be measured for payment by the number of calendar months that the equipment is in place and in operation, measured to the nearest month.

There will not be a price adjustment due to a change in the minimum computer system requirements.

Basis of Payment: The furnishing and maintenance of the construction field office furnishings and equipment will be paid at the listed unit price per month for the respective item "Construction Field Office Furnishings and Equipment", which price shall include all material, equipment, labor, service contracts, licenses, repair or replacement of hardware and software, related supplies and work incidental thereto, as well as any other costs to provide requirements of this specification.

Pay Item	Pay Unit
Construction Field Office Furnishings and Equipment	Month

INDEX OF CSI-FORMATTED SPECIFICATION AND CORRESPONDING FORM 816 ITEM NUMBER

MAINTENANCE FACILITIES TANK REPLACEMENT AT GLASTONBURY AND HARTFORD, CONNECTICUT STATE PROJECT NO. 171-418

Item #	CSI Sect.	Description of Item
		DIVISION 1 – GENERAL REQUIREMENTS
0177150A	013233	PHOTOGRAPHIC DOCUMENTATION
0177150A	017000	CONSTRUCTION STAKING
		DIVISION 3 - CONCRETE
0177150A	033000	CAST-IN-PLACE CONCRETE
		DIVISION 7 – THERMAL AND MOISTURE PROTECTION
0177150A	079200	JOINT SEALANTS
		DIVISION 8 – OPENINGS
0177150A	089000	LOUVERS AND VENTS
		DIVISION 13 - SPECIAL CONSTRUCTION
0177150A	132160	INSTALLATION OF NEW FUEL FACILITY
0177150A	132180	TANK MONITORING SYSTEM
		DIVISION 22 – PLUMBING
0177150A	223400	FUEL-FIRED DOMESTIC-WATER HEATERS
		DIVISION 23 – HEATING, VENTILATING AND AIR CONDITIONING
0177150A	230517	SLEEVES AND SLEEVE SEALS FOR HVAC PIPING
0177150A	230529	HANGERS AND SUPPORTS FOR HVAC PIPING AND EQUIPMENT
0177150A	230553	IDENTIFICATION FOR HVAC PIPING AND EQUIPMENT
0177150A	230719	HVAC PIPING INSULATION
0177150A	230900	INSTRUMENTATION AND CONTROL FOR HVAC
0177150A	230993	SEQUENCE OF OPERATIONS FOR HVAC CONTROLS
0177150A	231123	FACILITY NATURAL-GAS PIPING
0177150A	232113	HYDRONIC PIPING

GENERAL

0177150A	235100	BREECHINGS, CHIMNEYS, AND STACKS
0177150A	235223	CAST-IRON BOILERS

DIVISION 26 - ELECTRICAL

0177150A	260519	LOW-VOLTAGE ELECTRICAL POWER CONDUCTORS AND CABLES
0177150A	260526	GROUNDING AND BONDING FOR ELECTRICAL SYSTEMS
0177150A	260529	HANGERS AND SUPPORTS FOR ELECTRICAL SYSTEMS
0177150A	260533	RACEWAYS AND BOXES FOR ELECTRICAL SYSTEMS
0177150A	260543	UNDERGROUND DUCTS AND RACEWAYS FOR ELECTRICAL SYSTEMS
0177150A	260544	SLEEVES AND SLEEVE SEALS FOR ELECTRICAL RACEWAYS AND CABLING
0177150A	260553	IDENTIFICATION FOR ELECTRICAL SYSTEMS
0177150A	262416	PANELBOARDS
0177150A	262726	WIRING DEVICES
0177150A	262813	FUSES
0177150A	262816	ENCLOSED SWITCHES AND CIRCUIT BREAKERS
0177150A	265600	EXTERIOR LIGHTING

DIVISION 30 – SITE WORK

0177150A	300000	FORM 816 SITE WORK
0177150A	300500	TEMPORARY MAINTENANCE WORK AREA
0177150A	302000	GENERAL SITE WORK
0177150A	304000	FENCING AND GATES
0177150A	305000	TURF ESTABLISHMENT
0177150A	307000	SANITARY/DRAINAGE

SECTION 013233 - PHOTOGRAPHIC DOCUMENTATION

PART 1 - GENERAL

1.1 SUMMARY:

A. Section includes administrative and procedural requirements for the following:

1. Preconstruction photographs.
2. Periodic construction photographs.
3. Final completion construction photographs.

1.2 INFORMATIONAL SUBMITTALS:

A. At the Preconstruction Meeting, submit to the Engineer for approval the name of the photographer who will be responsible for taking the photographs during construction.

1.3 PHOTOGRAPHIC DOCUMENTATION SUBMITTALS:

A. Transmittal of Submittals: The zipped folder submittal package shall be uploaded into ProjectWise "01.0 – Projects-Active" under the subfolder "151_Project Photos" under the project number main folder. The specific work flow to do so will be distributed at the Preconstruction Meeting.

1. The Contractor shall attribute the submittal packages in ProjectWise using the following the following attributes and naming conventions:

a. Discipline: CTR
b. Main Category: CONTRACTOR
c. Sub Category: PROGRESS PHOTOS
d. Label: "Project Number - Progress Photos #XX - Date"
e. Description: "Progress Photos #XX – Date"

2. After uploading photographic documentation, the Contractor shall provide e-mail notification to submittal reviewers and other key personnel at their business e-mail address that the submittals have been uploaded and are available for review. The Contractor shall provide a web link to the zipped folder submittal within their e-mail notification. The Contractor shall include the following information in the notification e-mail subject line in this order: "Project Number - Progress Photos #XX - Date".

B. Digital Photographs: Submit image files within 7 days of taking photographs.

1. Include copy of key plan with each photograph submittal of Project site and building with notation of vantage points marked for location and direction of each photograph. Include same information as corresponding photographic documentation.

1.4 QUALITY ASSURANCE:

A. Photographer Qualifications: An individual who has been regularly engaged as a professional photographer of construction projects for not less than 3 years.

1.5 FORMATS AND MEDIA:

A. Digital Photographs: Provide color images in JPG format, produced by a digital camera with minimum sensor size of 12 megapixels, and at an image resolution of not less than 3200 by 2400 pixels, and with vibration-reduction technology. Use flash in low light levels or backlit conditions.

B. Digital Images: Submit digital media as originally recorded in the digital camera, without alteration, manipulation, editing, or modifications using image-editing software.

1.6 CONSTRUCTION PHOTOGRAPHS:

A. Photographer: Engage a qualified photographer to take construction photographs.

B. General: Take photographs with maximum depth of field and in focus.

1. Maintain key plan with each set of construction photographs that identifies each photographic location.

C. Preconstruction Photographs: Before commencement of Project Work, take photographs of Project site and surrounding properties, including existing items to remain during construction, from different vantage points, as directed by the Engineer.

1. Flag construction limits before taking construction photographs.
2. Take 24 photographs to show existing conditions adjacent to property before starting the Work.
3. Take 24 photographs of existing buildings either on or adjoining property to accurately record physical conditions at start of construction.
4. Take additional photographs as required to record settlement or cracking of adjacent structures, pavements, and improvements.

D. Periodic Construction Photographs: Take 24 photographs monthly coinciding as closely as possible with the completion of a major construction phase. Select vantage points to show status of construction and progress since last photographs were taken. Prior to taking any photographs review the proposed vantage points with the Engineer.

1. Photographs are for a record of the progress of work. Therefore, they shall be taken at a maximum interval of one month, whether or not they show any completion of work performed during the preceding month.

E. Final Completion Construction Photographs: Take 24 photographs after the date of Substantial Completion for submission as Project Record Documents. The Engineer will inform photographer of desired vantage points.

F. Additional Photographs: The Engineer may request photographs in addition to periodic photographs specified. Additional photographs will be paid for by Change Order and are not included in the Contract Sum.

1. Three days' notice will be given, where feasible.
2. In emergency situations, take additional photographs within 24 hours of request.
3. Circumstances that could require additional photographs include, but are not limited to, the following:

    a. Special events planned at Project site.
    b. Immediate follow-up when on-site events result in construction damage or losses.
    c. Photographs to be taken at fabrication locations away from Project site. These photographs are not subject to unit prices or unit-cost allowances.
    d. Substantial Completion of a major phase or component of the Work.
    e. Extra record photographs at time of final acceptance.
    f. Owner's request for special publicity photographs.

PART 2 - PRODUCTS (Not Used)

PART 3 - EXECUTION (Not Used)

END OF SECTION 013233

SECTION 017000 – CONSTRUCTION STAKING

PART 1 - GENERAL

1.1 SUMMARY:

A. The Contractor shall perform, including related administrative and procedural requirements, the following: construction layout and staking, field engineering and surveying, utility locations, general support services related to proposed construction methodology involving structural integrity or personnel safety, and civil engineering services.

B. Engage a Land Surveyor licensed in the State of Connecticut who is experienced in providing land-surveying services of the kind indicated.

C. Engage a Professional Engineer of the discipline required, licensed in the State of Connecticut, to perform engineering services of the kind indicated.

1.2 SUBMITTALS:

A. Submit a certificate signed by the Contractor and co-signed by a Land Surveyor or Professional Engineer certifying that the location and elevation of improvements comply with the Contract.

B. Submit a record of Project work performed and project data as required under provisions of Form 816 Article 1.20-1.08.14.

PART 2 - PRODUCTS

2.1 MATERIALS:

A. Project Record Drawings: Appropriate scale reproducible final drawings shall be submitted to the Engineer. Drawings shall conform to an “Existing Building Location Survey” with a Class T-2 accuracy standard in accordance with the Connecticut General Statues, Section 20-300b.

PART 3 - EXECUTION

3.1 EXECUTION:

A. The existence and location of underground and other utilities and construction indicated as existing are not guaranteed. Before beginning site work, investigate and verify the existence and location of underground utilities and other construction affecting the work. Furnish location data for Project work that must be performed by public utilities serving the Project Site.

B. Furnish information that is necessary to adjust, move or relocate existing structures, utility poles, lines, services, or other utility appurtenances located in or affected by construction. Coordinate with authorities having jurisdiction.

C. The existing benchmarks, control points and property corners are shown on the plans.

D. Verify layout information shown on the plans, in relation to the control points and existing benchmarks before proceeding to layout the Project work. Notify the Engineer if discrepancies are discovered. Locate existing permanent benchmarks, control points, and similar reference points before beginning Project work. Preserve and protect permanent benchmarks and control points during construction operations. Do not change or relocate benchmarks or control points without the Engineer's prior written approval. Promptly report lost or destroyed control points, or the need to relocate permanent benchmarks or control points because of necessary changes in grades or locations. Promptly replace lost or destroyed benchmarks and control points. Base replacements on the original survey control points.

E. Establish and maintain a minimum of (2) permanent benchmarks on the Project Site, referenced to data established by survey control points. Comply with authorities having jurisdiction for type and size of benchmark. Record benchmark locations, with horizontal and vertical data, on Project Record Documents. Provide temporary reference points sufficient to locate the work where the actual location or elevation of layout points cannot be marked. Remove temporary reference points when no longer needed. Restore marked construction to its original condition.

F. Construction methodology shall be the Contractor's sole responsibility including the cost of using engineering services and recommendations as necessary. Inform the Engineer of any anticipated or encountered problems in construction methodology. Proceed with work only when such problems are fully resolved by the Contractor, using such engineering support services as required.

G. Work from lines and levels established by the control survey. Establish benchmarks and control points to set lines and levels at each area of construction as needed to locate each element of the Project. Calculate and measure required dimensions within indicated or recognized tolerances. Do not scale plans to determine dimensions. Advise entities engaged in construction activities, of marked lines and levels provided for their use. As construction proceeds, check every major element for line, level and plumb.

H. Locate and lay out site improvements, including pavements, stakes for grading, fill and topsoil placement, utility slopes and invert elevations by instrumentation and similar appropriate means. The Contractor shall identify and document by survey the extent, elevation, and location of all foundations and capped utilities to be left in place and backfilled. Appropriate scaled marked up drawings shall be furnished to the Engineer PRIOR to backfilling.

I. Locate and lay out control lines and levels for structures, building foundations, column grids and locations, floor levels including those required for mechanical and electrical work. Transfer survey markings and elevations for use with control lines and levels. Level foundations and piers from (2) or more locations.

J. Maintain a surveyor's log of control and other survey work. Make this log available to the Engineer for reference. Record deviations from required lines and levels, and advise the Engineer when deviations that exceed indicated or recognized tolerances are detected. On Project Record Drawings, record deviations that are accepted by the Engineer and not corrected. Record the location of utilities at the time of installation in the log as well as on mylar for permanent record. The recording Land Surveyor shall place its registration seal and accuracy statement regarding location of exterior underground utility lines on the utility plans of As-Built tracings.

END OF SECTION 017000

SECTION 033000 - CAST-IN-PLACE CONCRETE

PART 1 - GENERAL

1.1 SUMMARY:

A. This Section specifies cast-in-place concrete, including formwork, reinforcement, concrete materials, mixture design, placement procedures, and finishes.

B. Related CSI Sections include the following:

1. Division 07 Section 079200, "Joint Sealants" for expansion joints, perimeter isolation joints and joint sealants for floor and wall joints.

1.2 SUBMITTALS:

A. Submit the following in accordance with Form 816 Article 1.20-1.05.02 and NOTICE TO CONTRACTOR – SUBMITTALS.

B. Product Data: For proprietary materials and items, including reinforcement and forming accessories, admixtures, joint systems, curing compounds, colored hardener and others if requested by the Designer.

C. Shop Drawings: For reinforcement detailing fabricating, bending, and placing concrete reinforcement. Comply with ACI 315 Detailing Manual – SP-66(94) showing bar schedules and arrangement of concrete reinforcement. Include special reinforcing required for openings through concrete structures. For slabs with mechanically-connected steel reinforcement, indicate anchors and inserts locations, proposed locations of all control, expansion and construction joints not otherwise shown on the plans.

D. Quality Assurance Submittals:

1. Laboratory test reports for concrete materials and mix design test.
2. Material certificates in lieu of material laboratory test reports when permitted by Engineer. Material certificates shall be signed by manufacturer and Contractor, certifying that each material item complies with or exceeds specified requirements. Provide certification from admixture manufacturers that chloride content complies with specification requirements.
3. Evidence that concrete materials have been tested and the test results are on file with the State of Connecticut Department of Transportation Laboratory.
4. Certified Materials Test Reports for each lot of reinforcement showing that it complies with ASTM A 615.

1.3 QUALITY ASSURANCE:

A. Codes and Standards: Comply with provisions of the following codes, specifications and standards, except where more stringent requirements are shown or specified:

1. State of Connecticut Department of Transportation "Form 816," "Standard Specification for Roads, Bridges and Incidental Construction"
2. ACI 301, "Specifications for Structural Concrete for Buildings."
3. ACI 318, "Building Code Requirements for Reinforced Concrete."
4. CRSI, "Manual of Standard Practice."
5. ACI 315, "Details and Detailing of Concrete Reinforcement"
6. ACI 347, "Recommended Practice for Concrete Formwork"
7. ACI 304R, "Recommended Practice for Measuring, Mixing, Transportation and Placing Concrete"
8. ACI 302.1R, "Guide for Concrete Floor and Slab Construction"
9. ACI 305R, "Hot Weather Concreting"
10. ACI 306R, "Cold Weather Concreting"
11. ACI 306.1, "Standard Specifications for Cold Weather Concreting"
12. ACI 308, "Standard Practice for Curing Concrete"
13. 309R "Standard Practice for Consolidating of Concrete"
14. ACI 211.1, "Standard Practice for Selecting Proportions for Normal, Heavy Weight and Mass Concrete"
15. ACI 303.1 "Standard Specifications for Cast-In-Place Architectural Concrete"
16. ASTM C309 "Standard Specifications for Liquid Membrane-Forming Compounds for Curing Concrete"
17. ASTM C494 "Standard Specifications for Chemical Admixtures for Concrete"

B. Testing Agency Qualifications: An independent agency, acceptable to the Engineer to perform material evaluation tests and to design concrete mixes, qualified according to ASTM C 1077 and ASTM E 329 for testing indicated, as documented according to ASTM E 548.

C. Materials and installed work may require testing and retesting at any time during progress of work. Tests, including retesting of rejected materials for installed work, shall be done at the Contractor's expense.

D. Concrete Testing Service: Engage a qualified independent testing agency, acceptable to the Engineer, to perform material evaluation tests and to design concrete mixtures. The Engineer or his designated representative will perform material evaluation tests on the concrete mixes designed by the Contractor.

E. Conduct a Pre-Installation Meeting at the Project Site in compliance with the requirements of Form 816 Article 1.20-1.05.24, subsection 2.

1. At least 35 calendar days prior to submitting design mixes, conduct a meeting to review detailed requirements for preparing concrete design mixes and to determine procedures for satisfactory concrete operations. Review requirements

for submittals, status of coordinating work, and availability of materials. Establish materials inspection, testing, and certifications. Require representatives of each entity directly concerned with cast-in-place concrete to attend the meeting.

F. Source Limitations: Obtain each type or class of cementitious material of the same brand from the same manufacturer's plant, obtain aggregate from one source, and obtain admixtures and color hardener through one source from a single manufacturer in accordance with Form 816 Article 1.20-1.06.01.

1.4 DELIVERY, STORAGE, AND HANDLING:

A. Refer to Form 816 Article 1.06.03 and Form 816 Article 1.20-1.06.03 for additional information.

B. Steel Reinforcement: Deliver, store, and handle steel reinforcement to prevent bending and damage. Avoid damaging coatings on steel reinforcement. Repair damaged epoxy coatings on steel reinforcement according to ASTM D 3963.

C. Water-stops: Store water-stops under cover to protect from moisture, sunlight, dirt, oil, and other contaminants.

PART 2 - PRODUCTS

2.1 FORM-FACING MATERIALS:

A. Forms for Exposed Finish Concrete: Plywood, metal, metal-framed plywood faced, or other acceptable panel type material that will provide continuous, true, and smooth, exposed concrete surfaces. Furnish in largest practicable sizes to minimize number of joints and to conform to joint system shown on the plans.

1. Use overlaid plywood complying with DOC PS-1 "A-C or B-B High Density Overlaid Concrete Form," Class I or better.
2. Use plywood complying with DOC PS-1 "B-B (Concrete Form) Plywood," Class I, Exterior Grade or better, mill-oiled and edge-sealed, with each piece bearing legible inspection trademark.

B. Forms for Unexposed Finished Concrete: Plywood, lumber, metal, or another approved material. Provide lumber dressed on at least two edges and one side for tight fit.

C. Chamfer Strips: Wood, metal, PVC, or rubber strips, 3/4 by 3/4 inch, minimum.

D. Form-Release Agent: Commercially formulated form-release agent that will not bond with, stain, or adversely affect concrete surfaces and will not impair subsequent

treatments of concrete surfaces. Comply with local regulations controlling use of volatile organic compounds (VOC's).

2.2 STEEL REINFORCEMENT:

A. Reinforcing Bars: ASTM A 615, Grade 60, deformed.

B. Epoxy-Coated Reinforcing Bars: ASTM A 775, with less than 2 percent damaged coating in each 12-inch bar length.

C. Plain-Steel Welded Wire Reinforcement: ASTM A 185, plain, fabricated from as-drawn steel wire into flat sheets.

2.3 REINFORCEMENT ACCESSORIES:

A. Joint Dowel Bars: ASTM A 615, Grade 60, plain-steel bars, cut bars true to length with ends square and free of burrs.

B. Epoxy Repair Coating: Liquid, two-part, epoxy repair coating; compatible with epoxy coating on reinforcement and complying with ASTM A 775.

C. Bar Supports: Bolsters, chairs, spacers, and other devices for spacing, supporting, and fastening reinforcing bars and welded wire reinforcement in place. Manufacture bar supports from steel wire, plastic, or pre-cast concrete according to CRSI's "Manual of Standard Practice," of greater compressive strength than concrete and as follows:

1. For concrete surfaces exposed to view where legs of wire bar supports contact forms, use CRSI Class 1 plastic-protected steel wire or CRSI Class 2 stainless-steel bar supports.

2.4 CONCRETE MATERIALS:

A. Cementitious Material: Use the following cementitious materials, of the same type, brand, and source, throughout Project:

1. Portland Cement: ASTM C 150, Type 1 or II, gray. Do not use air entraining cement.
2. Fly Ash: ASTM C618, Type C or F.

B. Normal-Weight Aggregates: ASTM C 33, Class 3S. Provide aggregates from a single source for exposed concrete.

1. For exposed exterior surfaces, do not use fine or coarse aggregates that contain substances that cause spalling.

2. Provide evidence that all aggregates are non-reactive with alkaline when tested in accordance with ASTM C 289 and C 227.
3. Local aggregates not complying with ASTM C 33 but have shown to produce concrete of adequate strength and durability by special tests or actual service may be used when acceptable to the Engineer.

C. Water: ASTM C 94, clean and potable.

2.5 ADMIXTURES:

A. Air-Entraining Admixture: ASTM C 260.

B. Chemical Admixtures: Provide admixtures certified by manufacturer to be compatible with other admixtures and that will not contribute water-soluble chloride ions exceeding those permitted in hardened concrete. Do not use calcium chloride or admixtures containing calcium chloride.

1. Water-Reducing Admixture: ASTM C 494, Type A.
2. Water-Reducing and Retarding Admixture: ASTM C 494, Type D.
3. High-Range, Water-Reducing Admixture: ASTM C 494, Type F.

C. Corrosion-Inhibiting Admixture: Commercially formulated, non-set-accelerating, anodic inhibitor or mixed cathodic and anodic inhibitor; capable of forming a protective barrier and minimizing chloride reactions with steel reinforcement in concrete.

2.6 WATERSTOPS:

A. Flexible PVC Water-stops: CE CRD-C 572, for embedding in concrete to prevent passage of fluids through joints. Factory-fabricate corners, intersections, and directional changes. Size to suit joints.

1. Profile: Flat, dumbbell with center bulb.

2.7 CURING MATERIALS:

A. Evaporation Retarder: Waterborne, monomolecular film forming, manufactured for application to fresh concrete.

B. Absorptive Cover: AASHTO M 182, Class 2, burlap cloth made from jute or kenaf, weighing approximately 9 oz./sq. yd. when dry. No curing membranes can be used on slabs-on grade and slab above the basement.

C. Moisture-Retaining Cover: ASTM C 171, polyethylene film or white burlap-polyethylene sheet.

D. Water: Clean and potable.

E. Clear, Waterborne, Membrane-Forming Curing Compound: ASTM C 309, Type 1, Class B, dissipating.

F. Clear, Waterborne, Membrane-Forming Curing Compound: ASTM C 309, Type 1, Class B, nondissipating**,** certified by curing compound manufacturer to not interfere with bonding of floor covering.

2.8 RELATED MATERIALS:

A. Expansion and Isolation-Joint-Filler Strips: ASTM D 1751, asphalt-saturated cellulosic fiber or ASTM D 1752, cork or self-expanding cork.

B. Semi-rigid Joint Filler: Two-component, semi-rigid, 100 percent solids, epoxy resin with a Type A Shore Durometer hardness of 80 per ASTM D 2240.

C. Bonding Agent: ASTM C 1059, Type II, non-redispersible, acrylic emulsion or styrene butadiene.

A. Epoxy Bonding Adhesive: ASTM C 881, two-component epoxy resin, capable of humid curing and bonding to damp surfaces, of class suitable for application temperature and of grade to suit requirements, and as follows:

1. Types I and II, non-load bearing, for bonding hardened or freshly mixed concrete to hardened concrete.

B. Granular Fill: Refer to Form 816, Section 2.13 “Granular Fill” for material and construction methods required.

2.9 REPAIR MATERIALS:

A. Repair Underlayment: Cement-based, polymer-modified, self-leveling product that can be applied in thicknesses from 1/8 inch and that can be feathered at edges to match adjacent floor elevations.

1. Cement Binder: ASTM C 150, Portland cement or hydraulic or blended hydraulic cement as defined in ASTM C 219.
2. Primer: Product of underlayment manufacturer recommended for substrate conditions and application.
3. Aggregate: Well-graded, washed gravel, 1/8 to 1/4 inch or coarse sand as recommended by underlayment manufacturer.
4. Compressive Strength: Not less than 4000 psi at 28 days when tested according to ASTM C 109/C 109M.

B. Repair Over-layment: Cement-based, polymer-modified, self-leveling product that can be applied in thicknesses from 1/8 inch and that can be feathered at edges to match adjacent floor elevations.

1. Cement Binder: ASTM C 150, Portland cement or hydraulic or blended hydraulic cement as defined in ASTM C 219.
2. Primer: Product of topping manufacturer recommended for substrate, conditions, and application.
3. Aggregate: Well-graded, washed gravel, 1/8 to 1/4 inch or coarse sand as recommended by topping manufacturer.
4. Compressive Strength: Not less than 4000 psi at 28 days when tested according to ASTM C 109/C 109M.

C. Penetrating Sealer: slabs-on-grade shall receive a coating of penetrating sealer applied in accordance with manufacturer's written instructions. Provide certification by manufacturer that product complies with local regulations controlling the use of volatile organic compounds (VOC). Available Products include, but are not limited to the following:

1. Hydrozo Silane 40M and Hydrozo Enviroseal 40 by Hydrozo.
2. Chem-Trete BSM 40 by Huls-America.
3. Masterseal SL40 by Master Builders.
4. Penetrating Sealer 40 - by Sonneborn Building Products.

2.10 CONCRETE MIXTURES, GENERAL:

A. Prepare design mixtures for each type and strength of concrete, proportioned on the basis of laboratory trial mixture or field test data, or both, according to ACI 301.

1. Use a qualified independent testing agency for preparing and reporting proposed mixture designs based on laboratory trial mixtures.

B. Cementitious Materials: Limit percentage, by weight, of cementitious materials other than Portland cement in concrete as follows:

1. Fly Ash: 15 percent. Not allowed in cement mixes for slab-on-grade.

C. Limit water-soluble, chloride-ion content in hardened concrete to 0.15 percent by weight of cement.

D. Admixtures: Use admixtures according to manufacturer's written instructions and only when approved by the Engineer.

1. Use water-reducing high-range water-reducing or plasticizing admixture in concrete, as required, for placement and workability.
2. Use water-reducing and retarding admixture when required by high temperatures, low humidity, or other adverse placement conditions.
3. Use water-reducing admixture in pumped concrete, except footings, concrete for heavy-use industrial slabs and parking structure slabs, concrete required to be watertight, and concrete with a water-cementitious materials ratio below 0.50.

4. Use non-chlorine accelerating admixture in concrete slabs placed at ambient temperatures below 50 deg F.
5. Corrosion-inhibiting admixture for salt shed stems and piers shall contain calcium nitrite at 4 gal. per cubic yard of a 30 percent solid solution.
6. No admixtures containing calcium chloride shall be permitted in slabs-on-grade and other concrete floors.

2.11 CONCRETE MIXTURES FOR BUILDING ELEMENTS:

A. Slabs-on-Grade: Proportion normal-weight concrete mixture as follows:

1. Minimum Compressive Strength: 4000 psi at 28 days.
2. Minimum Cementitious Materials Content: 540 lb/cu. yd.
3. Slump Limit: 3 inches , plus or minus 1 inch
4. Air Content: 6 percent, plus or minus 1.5 percent at point of delivery for 1-inch nominal maximum aggregate size.
5. Air Content: Do not allow air content of troweled finished floors to exceed 3 percent.

2.12 FABRICATING REINFORCEMENT:

A. Fabricate steel reinforcement according to CRSI's "Manual of Standard Practice."

2.13 CONCRETE MIXING:

A. Ready-Mixed Concrete: Measure, batch, mix, and deliver concrete according to ASTM C 94, and furnish batch ticket information.

1. When air temperature is between 85 and 90 deg F, reduce mixing and delivery time from 1-1/2 hours to 75 minutes; when air temperature is above 90 deg F, reduce mixing and delivery time to 60 minutes.
2. Project-Site Mixing: Measure, batch, and mix concrete materials and concrete according to ASTM C 94. Mix concrete materials in appropriate drum-type batch machine mixer.
3. For mixer capacity of 1 cu. yd or smaller, continue mixing at least 1-1/2 minutes, but not more than 5 minutes after ingredients are in mixer, before any part of batch is released. For mixer capacity larger than 1 cu. yd, increase mixing time by 15 seconds for each additional 1 cu. yd.
4. Provide batch ticket for each batch discharged and used in the Work, indicating Project identification name and number, date, mixture type, mixture time, quantity, and amount of water added. Record approximate location of final deposit in structure.

PART 3 - EXECUTION

3.1 FORMWORK:

A. Construct formwork so concrete members and structures are of size, shape, alignment, elevation, and position indicated, within tolerance limits of ACI 117.

B. Limit concrete surface irregularities, designated by ACI 347R as abrupt or gradual, as follows:

1. Class A, 1/8 inch for concrete surfaces exposed to view.
2. Class B, 1/4 inch for other concrete surfaces.

D. Construct forms tight enough to prevent loss of concrete mortar.

E. Fabricate forms for easy removal without hammering or prying against concrete surfaces. Provide crush or wrecking plates where stripping may damage cast concrete surfaces

1. Install keyways, reglets, recesses, and the like, for easy removal.
2. Do not use rust-stained steel form-facing material.

F. Set edge forms, bulkheads, and intermediate screed strips for slabs to achieve required elevations and slopes in finished concrete surfaces. Provide and secure units to support screed strips; use strike-off templates or compacting-type screeds.

G. Chamfer exterior corners and edges of permanently exposed concrete.

I. Form openings, chases, offsets, sinkages, keyways, blocking, screeds, and bulkheads required in the Work. Determine sizes and locations from trades providing such items.

J. Clean forms and adjacent surfaces to receive concrete. Remove chips, wood, sawdust, dirt, and other debris just before placing concrete.

K. Retighten forms and bracing before placing concrete, as required, to prevent mortar leaks and maintain proper alignment.

L. Coat contact surfaces of forms with form-release agent, according to manufacturer's written instructions, before placing reinforcement.

3.2 STEEL REINFORCEMENT:

A. General: Comply with CRSI's "Manual of Standard Practice" for placing reinforcement.

B. Clean reinforcement of loose rust and mill scale, earth, ice, and other foreign materials that would reduce bond to concrete.

C. Install welded wire reinforcement in longest practicable lengths on bar supports spaced to minimize sagging. Lap edges and ends of adjoining sheets at least one mesh spacing. Offset laps of adjoining sheet widths to prevent continuous laps in either direction. Lace overlaps with wire.

D. Epoxy-Coated Reinforcement: Repair cut and damaged epoxy coatings with epoxy repair coating according to ASTM D 3963/D 3963M. Use epoxy-coated steel wire ties to fasten epoxy-coated steel reinforcement.

1. Use Epoxy-Coated Reinforcing Bars for all concrete exposed to salt such as Slabs-on-Grade and Fuel Island.

3.3 JOINTS:

E. General: Construct joints true to line with faces perpendicular to surface plane of concrete.

F. Construction Joints: Install so strength and appearance of concrete are not impaired, at locations indicated or as approved by the Engineer.

1. Place joints perpendicular to main reinforcement. Continue reinforcement across construction joints, unless otherwise indicated. Do not continue reinforcement through sides of strip placements of floors and slabs.

G. Contraction Joints in Slabs-on-Grade: Form weakened-plane contraction joints, sectioning concrete into areas as indicated. Construct contraction joints for a depth equal to at least one-fourth of concrete thickness as follows:

1. Grooved Joints: Form contraction joints after initial floating by grooving and finishing each edge of joint to a radius of 1/8 inch. Repeat grooving of contraction joints after applying surface finishes. Eliminate groover tool marks on concrete surfaces.
2. Sawed Joints: Form contraction joints with power saws equipped with shatterproof abrasive or diamond-rimmed blades. Cut 1/8-inch-wide joints into concrete when cutting action will not tear, abrade, or otherwise damage surface and before concrete develops random contraction cracks.

3.4 WATERSTOPS:

A. Flexible Water-stops: Install in construction joints and at other joints indicated to form a continuous diaphragm. Install in longest lengths practicable. Support and protect exposed water-stops during progress of the Work. Field-fabricate joints in water-stops according to manufacturer's written instructions.

3.5 CONCRETE PLACEMENT:

A. Before placing concrete, verify that installation of formwork, reinforcement, and embedded items is complete and that required inspections have been performed.

B. Do not add water to concrete during delivery, at Project Site, or during placement unless approved by the Engineer.

C. Before test sampling and placing concrete, water may be added at Project Site, subject to limitations of ACI 301.

1. Do not add water to concrete after adding high-range water-reducing admixtures to mixture.

D. Deposit concrete continuously in one layer or in horizontal layers of such thickness that no new concrete will be placed on concrete that has hardened enough to cause seams or planes of weakness. If a section cannot be placed continuously, provide construction joints as indicated. Deposit concrete to avoid segregation.

1. Deposit concrete in horizontal layers of depth to not exceed formwork design pressures and in a manner to avoid inclined construction joints.
2. Consolidate placed concrete with mechanical vibrating equipment according to ACI 301.
3. Do not use vibrators to transport concrete inside forms. Insert and withdraw vibrators vertically at uniformly spaced locations to rapidly penetrate placed layer and at least 6 inches into preceding layer. Do not insert vibrators into lower layers of concrete that have begun to lose plasticity. At each insertion, limit duration of vibration to time necessary to consolidate concrete and complete embedment of reinforcement and other embedded items without causing mixture constituents to segregate.

E. Deposit and consolidate concrete for floors and slabs in a continuous operation, within limits of construction joints, until placement of a panel or section is complete.

1. Consolidate concrete during placement operations so concrete is thoroughly worked around reinforcement and other embedded items and into corners.
2. Maintain reinforcement in position on chairs during concrete placement.
3. Screed slab surfaces with a straightedge and strike off to correct elevations.
4. Slope surfaces uniformly to drains where required.
5. Begin initial floating using bull floats or darbies to form a uniform and open-textured surface plane, before excess bleed-water appears on the surface. Do not further disturb slab surfaces before starting finishing operations.

B. Cold-Weather Placement: Comply with ACI 306.1 and as follows. Protect concrete work from physical damage or reduced strength that could be caused by frost, freezing actions, or low temperatures.

1. When average high and low temperature is expected to fall below 40 deg F for three successive days, maintain delivered concrete mixture temperature within the temperature range required by ACI 301.
2. Do not use frozen materials or materials containing ice or snow. Do not place concrete on frozen sub-grade or on sub-grade containing frozen materials.
3. Do not use calcium chloride, salt, or other materials containing antifreeze agents or chemical accelerators unless otherwise specified and approved in mixture designs.

C. Hot-Weather Placement: Comply with ACI 301 and as follows:

1. Maintain concrete temperature below 90 deg F at time of placement. Chilled mixing water or chopped ice may be used to control temperature, provided water equivalent of ice is calculated to total amount of mixing water. Using liquid nitrogen to cool concrete is Contractor's option.
2. Fog-spray forms, steel reinforcement, and sub-grade just before placing concrete. Keep sub-grade uniformly moist without standing water, soft spots, or dry areas.

3.6 FINISHING SLABS:

A. General: Comply with ACI 302.1R recommendations for screeding, re-straightening, and finishing operations for concrete surfaces. Do not wet concrete surfaces.

1. Edge and Float the Slab, when all traces of the water are gone and the concrete starts to harden. Start by running the edger around the perimeter to round and compact the corner. After finishing edging start slab Float and Trowel the Surface to Smooth and Compact; Floating removes the marks left by edging and brings the surface one-step closer to a final finish.

B. Broom Finish: Apply a broom finish to exterior concrete platforms, steps, and ramps, and elsewhere as indicated.

1. Immediately after float finishing, slightly roughen trafficked surface by brooming with fiber-bristle broom perpendicular to main traffic route. The slab shall be uniform in appearance. The broom finish shall not dislodge aggregate nor leave large particles of cement paste which not conform to the broom finish. Coordinate required final finish with Engineer before application.

3.7 MISCELLANEOUS CONCRETE ITEMS:

A. Filling In: Fill in holes and openings left in concrete structures, unless otherwise indicated, after work of other trades is in place. Mix, place, and cure concrete, as specified, to blend with in-place construction. Provide other miscellaneous concrete filling indicated or required to complete the Work.

3.8 CONCRETE PROTECTING AND CURING:

A. General: Protect freshly placed concrete from premature drying and excessive cold or hot temperatures. Comply with ACI 306.1 for cold-weather protection and ACI 301 for hot-weather protection during curing. Do not use curing membranes on slabs-on-grade and concrete floors generally in areas of etched floors.

B. Evaporation Retarder: Apply evaporation retarder to unformed concrete surfaces if hot, dry, or windy conditions cause moisture loss approaching 0.2 lb/sq. ft. x h before and during finishing operations. Apply according to manufacturer's written instructions after placing, screeding, and bull floating or darbying concrete, but before float finishing.

C. Formed Surfaces: Cure formed concrete surfaces, including underside of beams, supported slabs, and other similar surfaces. If forms remain during curing period, moist cure after loosening forms. If removing forms before end of curing period, continue curing for the remainder of the curing period.

D. Cure concrete according to ACI 308.1, by one or a combination of the following methods:

1. Moisture Curing: Keep surfaces continuously moist for not less than seven days with the following materials:

   a. Water.
   b. Continuous water-fog spray.
   c. Absorptive cover, water saturated, and kept continuously wet. Cover concrete surfaces and edges with 12-inch lap over adjacent absorptive covers.

2. Moisture-Retaining-Cover Curing: Cover concrete surfaces with moisture-retaining cover for curing concrete, placed in widest practicable width, with sides and ends lapped at least 12 inches and sealed by waterproof tape or adhesive. Cure for not less than seven days. Immediately repair any holes or tears during curing period using cover material and waterproof tape.

   a. Moisture cure or use moisture-retaining covers to cure concrete surfaces to receive floor coverings.
   b. Moisture cure or use moisture-retaining covers to cure concrete surfaces to receive penetrating liquid floor treatments.
   c. Cure concrete surfaces to receive floor coverings with either a moisture-retaining cover or a curing compound that the manufacturer certifies will not interfere with bonding of floor covering used on Project.

3. Curing Compound: Apply uniformly in continuous operation by power spray or roller according to manufacturer's written instructions. Recoat areas subjected to heavy rainfall within three hours after initial application. Maintain continuity of coating and repair damage during curing period.

a. After curing period has elapsed, remove curing compound without damaging concrete surfaces by method recommended by curing compound manufacturer unless manufacturer certifies curing compound will not interfere with bonding of floor covering used on Project.

4. Curing and Sealing Compound: Apply uniformly to floors and slabs indicated in a continuous operation by power spray or roller according to manufacturer's written instructions. Recoat areas subjected to heavy rainfall within three hours after initial application. Repeat process 24 hours later and apply a second coat. Maintain continuity of coating and repair damage during curing period.

3.9 FIELD QUALITY CONTROL:

A. Testing and Inspecting: The State will engage a qualified testing and inspecting agency to perform field tests and inspections and prepare test reports.

B. Inspections:

1. Steel reinforcement placement.
2. Verification of use of required design mixture.
3. Concrete placement, including conveying and depositing.
4. Curing procedures and maintenance of curing temperature.
5. Verification of concrete strength before removal of shores and forms.

C. Concrete Tests: Testing of composite samples of fresh concrete obtained according to ASTM C 172 shall be performed according to the following requirements:

1. Testing Frequency: Obtain one composite sample for each day's pour of each concrete mixture exceeding 5 cu. yd., but less than 25 cu. yd. , plus one set for each additional 50 cu. yd. or fraction thereof.

   a. When frequency of testing will provide fewer than five compressive-strength tests for each concrete mixture, testing shall be conducted from at least five randomly selected batches or from each batch if fewer than five are used.

2. Slump: ASTM C 143; one test at point of placement for each composite sample, but not less than one test for each day's pour of each concrete mixture. Perform additional tests when concrete consistency appears to change.
3. Air Content: ASTM C 231, pressure method, for normal-weight concrete; one test for each composite sample, but not less than one test for each day's pour of each concrete mixture.
4. Concrete Temperature: ASTM C 1064; one test hourly when air temperature is 40 deg F and below and when 80 deg F and above, and one test for each composite sample.
5. Compression Test Specimens: ASTM C 31.

a. Cast and laboratory cure two sets of two standard cylinder specimens for each composite sample.

6. Compressive-Strength Tests: ASTM C 39; test one set of two laboratory-cured specimens at 7 days and one set of two specimens at 28 days.

   a. Test one set of two field-cured specimens at 7 days and one set of two specimens at 28 days.
   b. A compressive-strength test shall be the average compressive strength from a set of two specimens obtained from same composite sample and tested at age indicated.

7. When strength of field-cured cylinders is less than 85 percent of companion laboratory-cured cylinders, Contractor shall evaluate operations and provide corrective procedures for protecting and curing in-place concrete.
8. Strength of each concrete mixture will be satisfactory if every average of any three consecutive compressive-strength tests equals or exceeds specified compressive strength and no compressive-strength test value falls below specified compressive strength by more than 500 psi .
9. Test results shall be reported in writing to the Engineer, concrete manufacturer, and Contractor within 48 hours of testing. Reports of compressive strength tests shall contain Project identification name and number, date of concrete placement, name of concrete testing and inspecting agency, location of concrete batch in Work, design compressive strength at 28 days, concrete mixture proportions and materials, compressive breaking strength, and type of break for both 7- and 28-day tests.
10. Nondestructive Testing: Impact hammer, sonoscope, or other nondestructive device may be permitted by Engineer but will not be used as sole basis for approval or rejection of concrete.
11. Additional Tests: Testing and inspecting agency shall make additional tests of concrete when test results indicate that slump, air entrainment, compressive strengths, or other requirements have not been met, as directed by Engineer. Testing and inspecting agency may conduct tests to determine adequacy of concrete by cored cylinders complying with ASTM C 42 or by other methods as directed by Engineer.
12. Additional testing and inspecting, at Contractor's expense, will be performed to determine compliance of replaced or additional work with specified requirements.
13. Correct deficiencies in the Work that test reports and inspections indicate does not comply with the Contract.

D. Measure floor and slab flatness and levelness according to ASTM E 1155 within 48 hours of finishing.

END OF SECTION 033000

SECTION 079200 - JOINT SEALANTS

PART 1 - GENERAL

1.1 SUMMARY

A. Section Includes:

1. Silicone joint sealants, general.

B. Related Sections:

1. Division 03 Section 033000, "Cast-in-Place Concrete" for concrete control and expansion joint fillers and joint sealing.

1.2 PERFORMANCE REQUIREMENTS:

A. Provide elastomeric joint sealants that establish and maintain watertight and airtight continuous joint seals without staining or deteriorating joint substrates.

1.3 SUBMITTALS:

A. Submit the following in accordance with Form 816 Article 1.20-1.05.02 and NOTICE TO CONTRACTOR – SUBMITTALS.

B. Product Data: For each joint-sealant product indicated.

C. Quality Assurance Submittals:

1. Manufacturer Certification Letter in accordance with NOTICE TO CONTRACTOR – POTENTIAL FOR ASBESTOS CONTAINING MATERIALS.

D. Joint-Sealant Schedule: Include the following information:

1. Joint-sealant application, joint location, and designation.
2. Joint-sealant manufacturer and product name.
3. Joint-sealant formulation.

E. Product Certificates: For each kind of joint sealant and accessory, from manufacturer.

F. Sealant, Waterproofing, and Restoration Institute (SWRI) Validation Certificate: For each sealant specified to be validated by SWRI's Sealant Validation Program.

1.4 QUALITY ASSURANCE:

A. Installer Qualifications: Manufacturer's authorized representative who is trained and approved for installation of units required for this Project.

B. Source Limitations: Obtain each kind of joint sealant from single source from single manufacturer.

1.5 PROJECT CONDITIONS:

A. Do not proceed with installation of joint sealants under the following conditions:

1. When ambient and substrate temperature conditions are outside limits permitted by joint-sealant manufacturer or are below 40 deg F (5 deg C).
2. When joint substrates are wet.
3. Where joint widths are less than those allowed by joint-sealant manufacturer for applications indicated.
4. Where contaminants capable of interfering with adhesion have not yet been removed from joint substrates.

PART 2 - PRODUCTS

2.1 MATERIALS, GENERAL:

A. Compatibility: Provide joint sealants, backings, and other related materials that are compatible with one another and with joint substrates under conditions of service and application, as demonstrated by joint-sealant manufacturer, based on testing and field experience.

B. VOC Content of Interior Sealants: Provide sealants and sealant primers for use inside the weatherproofing system that comply with the following limits for VOC content when calculated according to 40 CFR 59, Part 59, Subpart D (EPA Method 24):

1. Architectural Sealants: 250 g/L.
2. Sealant Primers for Nonporous Substrates: 250 g/L.
3. Sealant Primers for Porous Substrates: 775 g/L.

2.2 SILICONE JOINT SEALANTS:

A. Single-Component, Nonsag, Neutral-Curing Silicone Joint Sealant: ASTM C 920, Type S, Grade NS, Class 100/50, for Use NT.

1. Available Products: Subject to compliance with requirements, available products that may be incorporated into the Work include, but are not limited to, the following:

a. Dow Corning Corporation; 790.
b. GE Advanced Materials - Silicones; SilPruf LM SCS2700.
c. May National Associates, Inc.; Bondaflex Sil 290.
d. Pecora Corporation; 311 NS.
e. Sika Corporation, Construction Products Division; SikaSil-C990.
f. Tremco Incorporated; Spectrem 1.

B. Mildew-Resistant, Single-Component, Nonsag, Neutral-Curing Silicone Joint Sealant: ASTM C 920, Type S, Grade NS, Class 25, for Use NT.

1. Available Products: Subject to compliance with requirements, available products that may be incorporated into the Work include, but are not limited to, the following:

a. Pecora Corporation; 898.

2.3 JOINT SEALANT BACKING:

A. General: Provide sealant backings of material that are nonstaining; are compatible with joint substrates, sealants, primers, and other joint fillers; and are approved for applications indicated by sealant manufacturer based on field experience and laboratory testing.

B. Cylindrical Sealant Backings: ASTM C 1330, Type C (closed-cell material with a surface skin), Type O (open-cell material), Type B (bicellular material with a surface skin), or any of the preceding types, as approved in writing by joint-sealant manufacturer for joint application indicated, and of size and density to control sealant depth and otherwise contribute to producing optimum sealant performance.

C. Bond-Breaker Tape: Polyethylene tape or other plastic tape recommended by sealant manufacturer for preventing sealant from adhering to rigid, inflexible joint-filler materials or joint surfaces at back of joint. Provide self-adhesive tape where applicable.

2.4 MISCELLANEOUS MATERIALS:

A. Primer: Material recommended by joint-sealant manufacturer where required for adhesion of sealant to joint substrates indicated, as determined from preconstruction joint-sealant-substrate tests and field tests.

B. Cleaners for Nonporous Surfaces: Chemical cleaners acceptable to manufacturers of sealants and sealant backing materials, free of oily residues or other substances capable of staining or harming joint substrates and adjacent nonporous surfaces in any way, and formulated to promote optimum adhesion of sealants to joint substrates.

C. Masking Tape: Nonstaining, nonabsorbent material compatible with joint sealants and surfaces adjacent to joints.

PART 3 - EXECUTION

3.1 EXAMINATION:

A. Examine joints indicated to receive joint sealants, with Installer present, for compliance with requirements for joint configuration, installation tolerances, and other conditions affecting joint-sealant performance.

B. Proceed with installation only after unsatisfactory conditions have been corrected.

3.2 PREPARATION:

A. Surface Cleaning of Joints: Clean out joints immediately before installing joint sealants to comply with joint-sealant manufacturer's written instructions and the following requirements:

1. Remove all foreign material from joint substrates that could interfere with adhesion of joint sealant, including dust, paints (except for permanent, protective coatings tested and approved for sealant adhesion and compatibility by sealant manufacturer), old joint sealants, oil, grease, waterproofing, water repellents, water, surface dirt, and frost.
2. Clean porous joint substrate surfaces by brushing, grinding, mechanical abrading, or a combination of these methods to produce a clean, sound substrate capable of developing optimum bond with joint sealants. Remove loose particles remaining after cleaning operations above by vacuuming or blowing out joints with oil-free compressed air. Porous joint substrates include the following:

   a. Concrete.

3. Remove laitance and form-release agents from concrete.

B. Joint Priming: Prime joint substrates where recommended by joint-sealant manufacturer or as indicated by preconstruction joint-sealant-substrate tests or prior experience. Apply primer to comply with joint-sealant manufacturer's written instructions. Confine primers to areas of joint-sealant bond; do not allow spillage or migration onto adjoining surfaces.

C. Masking Tape: Use masking tape where required to prevent contact of sealant or primer with adjoining surfaces that otherwise would be permanently stained or damaged by such contact or by cleaning methods required to remove sealant smears. Remove tape immediately after tooling without disturbing joint seal.

3.3 INSTALLATION OF JOINT SEALANTS:

A. General: Comply with joint-sealant manufacturer's written installation instructions for products and applications indicated, unless more stringent requirements apply.

B. Sealant Installation Standard: Comply with recommendations in ASTM C 1193 for use of joint sealants as applicable to materials, applications, and conditions indicated.

C. Install sealant backings of kind indicated to support sealants during application and at position required to produce cross-sectional shapes and depths of installed sealants relative to joint widths that allow optimum sealant movement capability.

1. Do not leave gaps between ends of sealant backings.
2. Do not stretch, twist, puncture, or tear sealant backings.
3. Remove absorbent sealant backings that have become wet before sealant application and replace them with dry materials.

D. Install bond-breaker tape behind sealants where sealant backings are not used between sealants and backs of joints.

E. Install sealants using proven techniques that comply with the following and at the same time backings are installed:

1. Place sealants so they directly contact and fully wet joint substrates.
2. Completely fill recesses in each joint configuration.
3. Produce uniform, cross-sectional shapes and depths relative to joint widths that allow optimum sealant movement capability.

F. Tooling of Nonsag Sealants: Immediately after sealant application and before skinning or curing begins, tool sealants according to requirements specified in subparagraphs below to form smooth, uniform beads of configuration indicated; to eliminate air pockets; and to ensure contact and adhesion of sealant with sides of joint.

1. Remove excess sealant from surfaces adjacent to joints.
2. Use tooling agents that are approved in writing by sealant manufacturer and that do not discolor sealants or adjacent surfaces.
3. Provide concave joint profile per Figure 8A in ASTM C 1193, unless otherwise indicated.
4. Provide flush joint profile where indicated per Figure 8B in ASTM C 1193.
5. Provide recessed joint configuration of recess depth and at locations indicated per Figure 8C in ASTM C 1193.

a. Use masking tape to protect surfaces adjacent to recessed tooled joints.

G. Installation of Preformed Silicone-Sealant System: Comply with the following requirements:

1. Apply masking tape to each side of joint, outside of area to be covered by sealant system.
2. Apply silicone sealant to each side of joint to produce a bead of size complying with preformed silicone-sealant system manufacturer's written instructions and covering a bonding area of not less than 3/8 inch (10 mm). Hold edge of sealant bead 1/4 inch (6 mm) inside masking tape.
3. Within 10 minutes of sealant application, press silicone extrusion into sealant to wet extrusion and substrate. Use a roller to apply consistent pressure and ensure uniform contact between sealant and both extrusion and substrate.
4. Complete installation of sealant system in horizontal joints before installing in vertical joints. Lap vertical joints over horizontal joints. At ends of joints, cut silicone extrusion with a razor knife.

H. Installation of Preformed Foam Sealants: Install each length of sealant immediately after removing protective wrapping. Do not pull or stretch material. Produce seal continuity at ends, turns, and intersections of joints. For applications at low ambient temperatures, apply heat to sealant in compliance with sealant manufacturer's written instructions.

3.4 FIELD QUALITY CONTROL:

A. Field-Adhesion Testing: Field test joint-sealant adhesion to joint substrates as follows:

1. Extent of Testing: Test completed and cured sealant joints as follows:

   a. Perform 1 test for each 1000 feet (30 m) of joint length thereafter or 1 test per each floor per elevation.

2. Test Method: Test joint sealants according to Method A, Field-Applied Sealant Joint Hand Pull Tab, in Appendix X1 in ASTM C 1193 or Method A, Tail Procedure, in ASTM C 1521.

   a. For joints with dissimilar substrates, verify adhesion to each substrate separately; extend cut along one side, verifying adhesion to opposite side. Repeat procedure for opposite side.

3. Inspect tested joints and report on the following:

   a. Whether sealants filled joint cavities and are free of voids.
   b. Whether sealant dimensions and configurations comply with specified requirements.
   c. Whether sealants in joints connected to pulled-out portion failed to adhere to joint substrates or tore cohesively. Include data on pull distance used to test each kind of product and joint substrate. Compare these results to determine if adhesion passes sealant manufacturer's field-adhesion hand-pull test criteria.

4. Record test results in a field-adhesion-test log. Include dates when sealants were installed, names of persons who installed sealants, test dates, test locations, whether joints were primed, adhesion results and percent elongations, sealant fill, sealant configuration, and sealant dimensions.
5. Repair sealants pulled from test area by applying new sealants following same procedures used originally to seal joints. Ensure that original sealant surfaces are clean and that new sealant contacts original sealant.

B. Evaluation of Field-Adhesion Test Results: Sealants not evidencing adhesive failure from testing or noncompliance with other indicated requirements will be considered satisfactory. Remove sealants that fail to adhere to joint substrates during testing or to comply with other requirements. Retest failed applications until test results prove sealants comply with indicated requirements.

3.5 CLEANING:

A. Clean off excess sealant or sealant smears adjacent to joints as the Work progresses by methods and with cleaning materials approved in writing by manufacturers of joint sealants and of products in which joints occur.

3.6 PROTECTION:

A. Protect joint sealants during and after curing period from contact with contaminating substances and from damage resulting from construction operations or other causes so sealants are without deterioration or damage at time of the issuance of the Certificate of Compliance. If, despite such protection, damage or deterioration occurs, cut out and remove damaged or deteriorated joint sealants immediately so installations with repaired areas are indistinguishable from original work.

END OF SECTION 079200

SECTION 089000 - LOUVERS AND VENTS

PART 1 - GENERAL

1.1 SUMMARY:

A. Section Includes:

1. Drainable Combination, extruded-aluminum louvers.
2. Actuators.

1.2 DEFINITIONS:

A. Louver Terminology: Definitions of terms for metal louvers contained in AMCA 501 apply to this Section unless otherwise defined in this Section or in referenced standards.

B. Horizontal Louver: Louver with horizontal blades; i.e., the axes of the blades are horizontal.

C. Drainable-Blade Louver: Louver with blades having gutters that collect water and drain it to channels in jambs and mullions, which carry it to bottom of unit and away from opening.

1.3 PERFORMANCE REQUIREMENTS:

A. Structural Performance: Louvers shall withstand the effects of gravity loads and the following loads and stresses within limits and under conditions indicated without permanent deformation of louver components, noise or metal fatigue caused by louver blade rattle or flutter, or permanent damage to fasteners and anchors. Wind pressures shall be considered to act normal to the face of the building.

1. Wind Loads: Determine loads based on a uniform pressure of 20 lbf/sq. ft., acting inward or outward.

B. Thermal Movements: Allow for thermal movements from ambient and surface temperature changes, without buckling, opening of joints, overstressing of components, failure of connections, or other detrimental effects.

1. Temperature Change (Range): 120 deg F, ambient; 180 deg F, material surfaces.

C. Louver Performance Ratings: Provide louvers complying with requirements specified, as demonstrated by testing manufacturer's stock units identical to those provided, except for length and width according to AMCA 500-L.

1.4 SUBMITTALS:

A. Submit the following in accordance with Form 816 Article 1.20-1.05.02 and NOTICE TO CONTRACTOR – SUBMITTALS.

B. Product Data: For each type of product indicated.

1. For louvers specified to bear AMCA seal, include printed catalog pages showing specified models with appropriate AMCA Certified Ratings Seals.

C. Shop Drawings: For louvers and accessories. Include plans, elevations, sections, details, and attachments to other work. Show frame profiles and blade profiles, angles, and spacing.

1. Show weep paths, gaskets, flashing, sealant, and other means of preventing water intrusion.
2. Show mullion profiles and locations.

D. Samples for Initial Selection: For units with factory-applied color finishes.

1.5 QUALITY ASSURANCE:

A. Source Limitations: Obtain louvers and vents from single source from a single manufacturer where indicated to be of same type, design, or factory-applied color finish.

B. Welding: Qualify procedures and personnel according to the following:

1. AWS D1.2/D1.2M, "Structural Welding Code - Aluminum."

C. SMACNA Standard: Comply with recommendations in SMACNA's "Architectural Sheet Metal Manual" for fabrication, construction details, and installation procedures.

1.6 PROJECT CONDITIONS:

A. Field Measurements: Verify actual dimensions of openings by field measurements before fabrication.

PART 2 - PRODUCTS

2.1 MATERIALS:

A. Aluminum Extrusions: ASTM B 221, Alloy 6063-T5, T-52, or T6.

B. Aluminum Sheet: ASTM B 209, Alloy 3003 or 5005 with temper as required for forming, or as otherwise recommended by metal producer for required finish.

C. Aluminum Castings: ASTM B 26, Alloy 319.

D. Fasteners: Use types and sizes to suit unit installation conditions.

1. Use Phillips flat-head screws for exposed fasteners unless otherwise indicated.
2. For fastening aluminum, use aluminum or 300 series stainless-steel fasteners.
3. For color-finished louvers, use fasteners with heads that match color of louvers.

E. Postinstalled Fasteners for Concrete and Masonry: Torque-controlled expansion anchors, made from stainless-steel components, with capability to sustain, without failure, a load equal to 4 times the loads imposed, for concrete, or 6 times the load imposed, for masonry, as determined by testing per ASTM E 488, conducted by a qualified independent testing agency.

F. Bituminous Paint: Cold-applied asphalt emulsion complying with ASTM D 1187.

2.2 FABRICATION, GENERAL:

A. Assemble louvers in factory to minimize field splicing and assembly. Disassemble units as necessary for shipping and handling limitations. Clearly mark units for reassembly and coordinated installation.

B. Maintain equal louver blade spacing, including separation between blades and frames at head and sill, to produce uniform appearance.

C. Fabricate frames, including integral sills, to fit in openings of sizes indicated, with allowances made for fabrication and installation tolerances, adjoining material tolerances, and perimeter sealant joints.

1. Frame Type: Channel unless otherwise indicated.

D. Include supports, anchorages, and accessories required for complete assembly.

E. Provide vertical mullions of type and at spacings indicated, but not more than recommended by manufacturer, or 72 inches o.c., whichever is less.

1. Fully Recessed Mullions: Where indicated, provide mullions fully recessed behind louver blades. Where length of louver exceeds fabrication and handling limitations, fabricate with close-fitting blade splices designed to permit expansion and contraction.
2. Exterior Corners: Prefabricated corner units with mitered and welded blades and with fully recessed mullions at corners.

F. Provide extended sills for recessed louvers.

G. Join frame members to each other and to fixed louver blades with fillet welds concealed from view unless otherwise indicated or size of louver assembly makes bolted connections between frame members necessary.

2.3 DRAINABLE COMBINATION, EXTRUDED-ALUMINUM LOUVERS:

A. Louver Construction and Operation: Provide adjustable louvers with extruded-aluminum frames and blades not less than 0.080-inch nominal thickness, and with operating mechanisms to suit louver sizes.

1. Motor operation with 2-position, spring-return application (with power on, motor opens louver; with power off, spring closes louver); equipped with terminals for controlling devices.

B. Dual-Blade, Drainable-Blade, Adjustable Louver: Fixed drainable blades and adjustable plain blades combined in single frame.

1. Basis-of-Design Product: Subject to compliance with requirements, provide Model No. ELC6375DAX as manufactured by Ruskin Company; Tomkins PLC, or an approved equal.
2. Louver Depth: 6 inches, overall.
3. Louver Performance Ratings:

a. Free Area: Not less than 11.0 sq. ft. for 84-inch-wide by 42-inch-high louver. Not less than 7.48 sq. ft for 48-inch-wide by 48-inch-high louver.

1) Total Free Area: As noted on Mechanical plans.

b. Point of Beginning Water Penetration: Not less than 1000 fpm.
c. Air Performance: Not more than 0.15-inch wg static pressure drop at 1000-fpm free-area intake velocity.

4. AMCA Seal: Mark units with AMCA Certified Ratings Seal.

2.4 LOUVER SCREENS:

A. General: Provide screen at each exterior louver.

1. Screen Location for Adjustable Louvers: Interior face unless otherwise indicated.
2. Screening Type: Bird screening.

B. Secure screen frames to louver frames with machine screws with heads finished to match louver, spaced a maximum of 6 inches from each corner and at 12 inches o.c.

C. Louver Screen Frames: Fabricate with mitered corners to louver sizes indicated.

1. Metal: Same kind and form of metal as indicated for louver to which screens are attached. Reinforce extruded-aluminum screen frames at corners with clips.
2. Finish: Same finish as louver frames to which louver screens are attached.
3. Type: Rewirable frames with a driven spline or insert.

D. Louver Screening for Aluminum Louvers:

1. Bird Screening: Aluminum, 1/2-inch-square mesh, 0.063-inch wire.

2.5 FINISHES, GENERAL:

A. Comply with NAAMM's "Metal Finishes Manual for Architectural and Metal Products" for recommendations for applying and designating finishes.

2.6 ALUMINUM FINISHES:

A. Finish louvers after assembly.

B. Color Anodic Finish: AAMA 611, AA-M12C22A42/A44, Class I, 0.018 mm or thicker.

1. Color: Dark bronze.

2.7 ACTUATORS:

A. Electronic Actuators: Direct-coupled type designed for minimum 60,000 full-stroke cycles at rated torque.

1. Dampers: Size for running torque calculated as follows:

a. Parallel-Blade Damper with Edge Seals: 7 inch-lb/sq. ft. of damper.

2. Coupling: V-bolt and V-shaped, toothed cradle.
3. Overload Protection: Electronic overload or digital rotation-sensing circuitry.
4. Fail-Safe Operation: Mechanical, spring-return mechanism.
5. Power Requirements: 24-V ac.
6. Electronic Damper Position Indicator: Visual scale indicating percent of travel and 2- to 10-V dc, feedback signal
7. Auxiliary switch: Built-in, UL-listed, SPDT.

PART 3 - EXECUTION

3.1 EXAMINATION:

A. Examine substrates and openings, with Installer present, for compliance with requirements for installation tolerances and other conditions affecting performance.

B. Proceed with installation only after unsatisfactory conditions have been corrected.

3.2 PREPARATION:

A. Coordinate setting drawings, diagrams, templates, instructions, and directions for installation of anchorages that are to be embedded in concrete or masonry construction. Coordinate delivery of such items to Project Site.

3.3 INSTALLATION:

A. Locate and place louvers and vents level, plumb, and at indicated alignment with adjacent work.

B. Use concealed anchorages where possible. Provide brass or lead washers fitted to screws where required to protect metal surfaces and to make a weathertight connection.

C. Form closely fitted joints with exposed connections accurately located and secured.

D. Provide perimeter reveals and openings of uniform width for sealants and joint fillers, as indicated.

E. Repair finishes damaged by cutting, welding, soldering, and grinding. Restore finishes so no evidence remains of corrective work. Return items that cannot be refinished in the field to the factory, make required alterations, and refinish entire unit or provide new units.

F. Protect unpainted galvanized and nonferrous-metal surfaces that will be in contact with concrete, masonry, or dissimilar metals from corrosion and galvanic action by applying a heavy coating of bituminous paint or by separating surfaces with waterproof gaskets or nonmetallic flashing.

G. Install concealed gaskets, flashings, joint fillers, and insulation as louver installation progresses, where weathertight louver joints are required. Comply with CSI Division 07 Section 079200, “Joint Sealants” for sealants applied during louver installation.

H. Actuators: Install in accordance with manufacturer’s instructions along with the following:

1. To compress seals when spring return actuators are used on normally closed dampers, power actuator to approximately 5 degrees open position, manually close the damper, and then tighten the linkage.
2. Check operation of damper/actuator combination to confirm that actuator modulates damper smoothly throughout stroke to both open and closed positions.
3. Provide wiring as necessary to interlock damper/actuator with boiler burner so that on a call for the boiler, the dampers shall be enabled open.

3.4 ADJUSTING AND CLEANING

A. Test operation of adjustable louvers and adjust as needed to produce fully functioning units that comply with requirements.

B. Clean exposed surfaces of louvers and vents that are not protected by temporary covering, to remove fingerprints and soil during construction period. Do not let soil accumulate during construction period.

C. Before final inspection, clean exposed surfaces with water and a mild soap or detergent not harmful to finishes. Thoroughly rinse surfaces and dry.

1. Touch up minor abrasions in finishes with air-dried coating that matches color and gloss of, and is compatible with, factory-applied finish coating.

END OF SECTION 089000

SECTION 132160 – INSTALLATION OF NEW FUEL FACILITY

PART 1 - GENERAL

1.1 SUMMARY:

A. The Contractor shall install three complete fuel facilities, except as otherwise noted, in conformity with the lines, grades, dimensions and details shown on the plans and as described herein.

B. Each component of the fuel facility shall be compatible with the dispensing of E85 Ethanol. Where model numbers are used herein, but are not compatible with E85 Ethanol, the appropriate E85 Ethanol compatible component shall be supplied at no additional cost to the Engineer.

C. The tank nipple arrangement described herein and shown on the plans is based upon the aboveground storage tank identified herein. "Or Equal" submissions will address the need for an alternative tank nipple arrangement, if necessary, that is acceptable to the Designer. Alternative tank nipple arrangements will also be at no additional cost to the Engineer.

D. Related CSI Sections include the following:

1. Division 13 Section 132180, "Tank Monitoring System" for aboveground and underground storage tank monitoring system.

1.2 DEFINITIONS:

A. AST: Aboveground storage tank.

1.3 ACTION SUBMITTALS:

A. Submit the following in accordance with Form 816 Article 1.20-1.05.02 and NOTICE TO CONTRACTOR – SUBMITTALS.

B. Product Data: For each type of product indicated. Include construction details, material descriptions, and dimensions of individual components and profiles. Also include, where applicable, rated capacities, operating characteristics, electrical characteristics, and furnished specialties and accessories.

1. Spare Parts: Include name, address, and telephone number of in-state supplier of spare parts. No out-of-state suppliers shall be permitted.

C. Shop Drawings: For storage tanks and pumps, include details of supports and anchors. Indicate all critical dimensions, locations of all nipples, and accessories, etc.

1.4 INFORMATIONAL SUBMITTALS:

A. Quality Assurance Submittals:

1. Certification that tank test equipment conforms to State and Federal requirements and that the persons performing the tests are qualified on said test equipment.
2. Field quality control test reports.

1.5 CLOSEOUT SUBMITTALS:

A. Operation and Maintenance Data: For fuel facility equipment and accessories to include in the operation and maintenance manuals specified in Form 816 Article 1.20-1.08.14 subsection 2 and described in NOTICE TO CONTRACTOR – CLOSEOUT DOCUMENTS. Include the following:

1. Interconnection as-built wiring diagrams with identified system components and devices for the entire fuel control center and fuel island.

B. Warranty: Special warranties specified in Part 1.9, "WARRANTY."

1.6 QUALITY ASSURANCE:

A. Electrical Installer Qualifications: An experienced electrician capable of wiring, installing, and troubleshooting all related portions of a fuel facility as specified in this Section.

B. Conduct a Pre-Installation Meeting at the Project Site in compliance with the requirements of Form 816 Article 1.20-1.05.24 subsection 2.

1. Meet with Engineer's representatives before any conduit or conductors are installed to develop a mutual understanding of the details and interconnections of the Fuel Management System, Tank Monitoring System, fuel dispensers, and submersible pumps. Ensure the participation of the Contractor, Electrical Installer, Fuel Management System manufacturers' authorized service representative, Tank Monitoring System manufacturers' authorized service representative, submersible pump manufacturers' authorized service representative, and other support personnel. Provide seven calendar days' advance notice of scheduled meeting time and location.

1.7 DELIVERY, STORAGE, AND HANDLING:

A. Lift tanks in accordance with manufacturer's instructions and with the proper equipment. Do not use chain or cables around tanks at any time. If tanks have to be moved, set on smooth ground free of rocks and foreign objects. Do not drop or roll tanks. Do not allow tanks to be impacted.

B. Other Tank Materials: Store material in a clean dry area protected from damage. Materials may be stored outside only with the written approval of the Engineer.

1.8 COORDINATION:

A. A charge of $44,000.00 shall be included in the contract bid price for the filling of the gasoline and diesel ASTs to 50% of the rated capacity with Automotive Unleaded Gasoline and Ultra Low Sulfur Vehicular Diesel, or as otherwise directed by the Engineer. All Contractors will include the above amount for gasoline and diesel AST filling in the Contract Bid Price. If it is determined that different charges apply, the Contractor's bid will be adjusted to reflect the differential by construction order, provided that the Contractor provides all applicable written billing documentation. The Contractor will be compensated only for the difference between the billed amount and the estimated amount. No additional Contractor markup will be allowed.

1.9 WARRANTY:

A. Refer to Form 816 Article 1.20-1.06.08 and NOTICE TO CONTRACTOR – CLOSEOUT DOCUMENTS for additional information.

B. Special Warranty: Manufacturer's standard form in which manufacturer agrees to repair or replace storage tanks that fail in materials or workmanship within specified warranty period.

1. Storage Tanks:

a. Failures include, but are not limited to, the following when used for storage of motor fuel at temperatures not exceeding 150 deg F:

1) Structural failures including cracking, breakup, and collapse.
2) Corrosion failure including external and internal corrosion of tanks.

b. Warranty Period: 30 years from the issuance of the Certificate of Compliance.

PART 2 - PRODUCTS

2.1 PIPES, TUBES, AND FITTINGS:

A. Black Steel Pipe: Schedule 40, conforming to ASTM A53 with malleable iron fittings conforming to ANSI B16.3.

B. Galvanized Steel Pipe: Schedule 40, conforming to ASTM A53 with zinc-coated malleable iron fittings conforming to ANSI B16.3.

2.2 JOINING MATERIALS:

A. Per manufacturer recommendations unless otherwise noted.

2.3 MANUAL SHUTOFF VALVES:

A. General Requirements for Metallic Valves, NPS 2 and Smaller for Liquid Service: Comply with UL 842.

1. CWP Rating: 125 psig.
2. Threaded Ends: Comply with ASME B1.20.1.
3. Dryseal Threads on Flare Ends: Comply with ASME B1.20.3.
4. Tamperproof Feature: Locking feature for valves indicated in the valve schedule.
5. Service Mark: Initials "WOG" shall be permanently marked on valve body.

B. Two-Piece, Full-Port, Bronze Ball Valves with Bronze Trim: MSS SP-110.

1. Manufacturers: Subject to compliance with requirements, available manufacturers offering products that may be incorporated into the Work include, but are not limited to, the following:

a. BrassCraft Manufacturing Company; a Masco company.
b. Conbraco Industries, Inc.; Apollo Div.
c. Lyall, R. W. & Company, Inc.
d. McDonald, A. Y. Mfg. Co.
e. Perfection Corporation; A Subsidiary of American Meter Company.

2. Body: Bronze, complying with ASTM B 584.
3. Ball: Chrome-plated bronze.
4. Stem: Bronze; blowout proof.
5. Seats: Reinforced TFE; blowout proof.
6. Packing: Threaded-body packnut design with adjustable-stem packing.
7. Ends: Threaded, flared, or socket as indicated in the valve schedule.
8. CWP Rating: 600 psig.
9. Service Mark: Initials "WOG" shall be permanently marked on valve body.

2.4 PROTECTED, STEEL, MOTOR FUEL AST:

A. Description: UL 142 and UL 2085; thermally insulated, fire-resistant and protected, double-wall, horizontal, steel tank; with primary- and secondary-containment walls and insulation and with interstitial space.

B. Construction: Concrete-Vaulted or Insulated Double-Wall.

1. Concrete-Vaulted: Fabricated with welded, carbon steel and insulation and encased in concrete; suitable for operation at atmospheric pressure and for storing motor fuel.

a. The tank shall consist of a primary steel tank covered by a minimum of ¼" thick extruded polystyrene foam insulation panels. The secondary containment shall consist of a 30 mil thick high-density polyethylene membrane enclosing the steel tank and insulation material. The primary steel tank and the secondary containment shall be encased in six inches of monolithic reinforced concrete, with minimum design strength of 5,000 psi at 28 days.

b. The concrete design shall include the following for long-term durability: air entrainment, water reducing admixture, and steel reinforcement. Concrete encasements with seams will not be approved. The protected and insulated tank systems shall contain no cold joints or heat sinks (heat transfer points). No steel or insulating material shall come in contact with the concrete or other corrosive material.

2. Insulated Double-Wall: Fabricated with welded, carbon steel and insulation; suitable for operation at atmospheric pressure and for storing motor fuel.

a. The tank shall consist of an inner steel tank, encased by lightweight thermal insulation material, and an outer steel wall. The outer steel wall shall be capable of providing a minimum 110% containment of the primary storage tank's content.

b. Steel outer wall of the tank shall be coated to prolong weather resistance and to further reduce maintenance needs. All external surfaces including the tank shall receive a commercial grit blast, epoxy primer coat, and finish coatings.

c. The tank's interstitial space shall include a porous, lightweight monolithic thermal insulation material. The thermal insulation material shall not be exposed to weathering, shall be protected by the steel secondary containment outer wall, and shall allow liquid to migrate through the interstice to the monitoring point.

C. Protection: The AST's shall be suitable for operation at atmospheric pressure; fabricated to meet the following criteria:

1. Provide two (2) hour fire protection in accordance with UL 2085.

2. Vehicle Impact Resistance: Tanks shall be designed to have a low center of gravity that can withstand vehicle impact and tipping during earthquakes and other natural disasters.
3. Ballistic Resistance: Tanks shall withstand bullet resistance tests in compliance with UL 2085.
4. Lightning Protection: The protected and insulated AST systems shall have two (2) bolts for connecting grounding conductors for lightning protection. Grounding conductor and grounding rod materials and installation shall be in accordance with NFPA 780.

D. The primary steel tanks shall include an atmospheric vent and emergency venting in accordance with NFPA 30 Code requirements.

E. Support legs shall be monolithically cast with the concrete vault or welded to outer tank as a complete UL-listed unit.

2.5 MOTOR FUEL AST ACCESSORIES:

A. Threaded pipe connection nipples on top of tank for fill, vapor recovery, submersible pump, vent, in-tank probe, interstitial sensor, and gauging, in locations and of sizes indicated on the Plans.

B. 24" Manway Assembly for access to inside the tank with 8" Emergency Vent. The emergency vent relief system shall relieve the pressure of the primary tank if the tank pressure exceeds 1/2 psig.

C. Tank Fill Assembly: 7-gallon coated, UL listed spill containment. The assembly shall include a normally closed drain valve to release spilled product into the primary tank and a stick port for manual gauging.

D. Tank Charts: Provide (3) copies. Mount 1 copy in a glass frame secured to the wall with 4 screws adjacent to the Fuel Control Center, or as directed by the Engineer. Charts shall be calibrated to show tank capacity in gallons from feet and inches, graduated by eighths.

E. Gauge Stick: Wooden, manufacturer's recommended length, treated after graduating to prevent swelling and damage from fuel. Gauge stick shall be graduated in feet, inches, and eighths.

F. Stair Assembly: Tank manufacturer's standard galvanized steel stairway for access to the top of the tank. Stairs and railings shall comply with OSHA Standards.

G. Emergency Response Identification: Hazard sign that meets the requirements of NFPA 704. Hazard rating numerals shall be a minimum of 3 inches high. Sign shall be vinyl or aluminum, intended for outdoor use.

2.6 TANK INSTALLATION MATERIALS:

A. Grout: Non-shrink type.

B. Granular Fill: Refer to Form 816, Section 2.13 “Granular Fill” for material and construction methods required.

C. Concrete Pads: Comply with the requirements in CSI Division 03 Section 033000, “Cast-in-Place Concrete.”

2.7 MOTOR FUEL STORAGE TANK SPECIALTIES:

A. Submersible Pump:

1. Gasoline: Construction type AG high capacity, ¾-HP, 208-230 volt, single phase, Model No. AGUMP75S1 with AGP75S1 manifold as manufactured by Red Jacket, or an approved equal, with model length sized to fit tank.
2. Diesel: Construction type AG high capacity, 2-HP, 208-230 volt, single phase, Model No. AGUMP200S1 with AGP200S1 manifold as manufactured by Red Jacket, or an approved equal, with model length sized to fit tank.

B. Overfill Prevention:

1. Overfill Prevention Valve: Suitable for installation in aboveground motor fuel storage tanks and compatible with E85 Ethanol, provide Model No. 61fSTOP-200M as manufactured by OPW, or an approved equal, which will stop the flow of liquid into the tank when product level reaches 95% of tank capacity.
2. Lower Drop Tube: Fiberglass, compatible with overfill prevention valve, as manufactured by NOV Fiber Glass Systems, or an approved equal. Drop tube shall terminate 6-inches above the bottom of the tank, with the end of drop tube cut off at a 45-degree angle.

C. Fill Adaptor and Cap: 2-inch Tank Inlet Spout Adaptor Model No. 633AST with 2-inch locking dust cap, Model No. 634BK as manufactured by OPW, or an approved equal.

D. Vapor Recovery Adaptor and Cap: Threaded Adaptor, Model No. 323, and locking vapor adaptor cap, Model No. 323C, as manufactured by Morrison Bros., or an approved equal.

E. Stick Port Cap: Test well lockable cap and adaptor, 2” NPT.

F. Vent Cap:

1. Gasoline: Combination vent/flame arrester, Model No. 351S-0200 AV as manufactured by Morrison Bros. Co. or an approved equal.

a. Vent: Pressure vacuum type, corrosion-resistant, internal wire screen designed to protect vent lines from water, debris, and insects, and normally closed poppet.

b. Flame Arrester: Designed for installation in tank vent lines to prevent flames from passing through the vent lines into the tank's vapor space, cast iron body and cover, stainless steel arrester plate, and brass arrester grid housing

2. Diesel: Open atmospheric type, corrosion-resistant, internal wire screen designed to protect vent lines from water, debris, and insects, Model No. 23 as manufactured by OPW, or an approved equal.

G. Solenoid Valves with Thermal Pressure Relief: Two-way electrically operated, normally closed diaphragm valve to prevent accidental siphoning of fuel in case of a leak or break in the fuel line, provide Model No. 821 with Model No. 82RV relief valve as manufactured by OPW, or an approved equal.

H. External Emergency Valve: Designed for installation at the outlet of an AST where product flow must be stopped in the event of a fire. UL listed, 2" NPT, ductile iron body, with 165 degree F. fusible link, Model No. 346 as manufactured by Morrison Bros., or an approved equal.

I. Ball Valves: Full Port Two-Way as manufactured by OPW, or an approved equal.

J. Probe Cap and Adaptor: Bronze, side-sealing adaptor, side sealing cap (tapped), wire grommet to secure cables, Model No. 62M as manufactured by OPW, or an approved equal.

2.8 SOURCE QUALITY CONTROL:

A. Pressure test and inspect fuel storage tanks, after fabrication and before shipment, according to ASME and the following:

1. Horizontal, Concrete-Vaulted and Insulated, Steel ASTs: UL 142 and UL 2085.

B. Affix standards organization's code stamp.

2.9 FUEL DISPENSERS:

A. Dispensers:

1. Gasoline: Subject to compliance with requirements, single product dispensers shall be E3/G7207D/2GHJKRX/S3 as manufactured by Wayne, or an approved equal. Electronic-type, pedestal-mounted, standard capacity remote dispenser with lane-oriented nozzle boot, suitable for dispensing a single product through 1 hose.

Each component in the product path shall be compatible with dispensing E85 Ethanol. Cabinet shall be heavy gauge stainless steel including cabinet top, sides, base, and the hinged cabinet door panel shall be stainless steel.

2. High Flow Diesel: Subject to compliance with requirements, single product dispensers shall be 3/G7227D/GHJKR/S3 as manufactured by Wayne, or an approved equal. Electronic-type, pedestal-mounted, super high capacity remote dispenser with lane-oriented nozzle boot, suitable for dispensing a single product through 1 hose. Cabinet shall be heavy gauge stainless steel including cabinet top, sides, base, and the hinged cabinet door panel shall be stainless steel.
3. Dual Flow Diesel: Subject to compliance with requirements, single product dispensers shall be 3/G7227D/GHJK/S3 as manufactured by Wayne, or an approved equal. Electronic-type, pedestal-mounted, super high capacity remote dispenser with lane-oriented nozzle boots, suitable for dispensing a single product through 2 hoses. Cabinet shall be heavy gauge stainless steel including cabinet top, sides, base, and the hinged cabinet door panel shall be stainless steel.

B. Dispenser Product ID Panels: 22.5-inch wide by 2.64-inch high polycarbonate panels as manufactured by Gasoline Advertising Products, or an approved equal:

1. Diesel: Part #DG00-PID-DSL, color coded “Yellow.”
2. Gasoline: Part #DG00-PID-UNL, color coded “Silver.”

C. Dispenser Pedestal-Mount Kit: Manufacturer’s low profile stainless steel dispenser platform for mounting dispenser with factory installed penetration fittings for product piping and electrical conduits.

D. Dispenser and FMU Island Forms: Prefabricated, stainless steel, 13-inches deep by the width and the length indicated on the Plans as manufactured by OPW, or an approved equal

E. Emergency Shear Valve (Product): Cast-iron body double-poppet-type, Model No. 10P-0152E85 and manufacturer standard mounting kit Model No. 10UBK-015 as manufactured by OPW, or an approved equal.

F. Filter and Filter Adapter: 1-inch spin-on filter with adapter, suitable for mounting within dispenser, as manufactured by Cim-Tek, or an approved equal:

1. Gasoline and Diesel: Model No. 400MB-10.
2. High Flow Diesel: Model No. 800BMG-10.

G. High hose retractors and static wires: Manufacturer standard with foot base and dispenser bracket.

H. Breakaway Hose Couplings:

1. Gasoline and Diesel: ¾-inch diameter re-connectable breakaway coupling Model No. 66REC as manufactured by OPW, or an approved equal.

2. High Flow Diesel: 1-inch diameter re-connectable breakaway coupling Model No. 66RB as manufactured by OPW, or an approved equal.

I. Hose:

1. Black rubber, smooth bore, whip hose with stainless steel fittings.

a. Hose Length from Dispenser to Breakaway Coupling: 17-feet.
b. Hose Length from Breakaway Coupling to Nozzle: 8-inches.
c. Diameter:

1) Gasoline and Diesel: ¾-inch.
2) High Flow Diesel: 1-inch.

J. Swivels:

1. Gasoline and Diesel: Multi-plane swivel designed for use with unleaded, diesel, and all ethanol blends through E100 fuel with aluminum with electroless nickel plating, fluorosilicone inner O-ring, fluorocarbon outer O-ring, sized to fit hose and nozzle, Model No. 6350 as manufactured by Husky Corporation, or an approved equal.
2. High Flow Diesel: Multi-plane swivel designed for use with diesel fuel with aluminum body, zinc adaptors, dual Buna-N seals, nylon bearings, sized to fit hose and nozzle, Model No. 241TPS-1000 as manufactured by OPW, or an approved equal.

K. Nozzles:

1. Gasoline: Aluminum body and spout with 13/16" O.D., automatic-type, with full rubber hand insulator Model No. 21Ge-0492, Color-coded "Black" as manufactured by OPW, or an approved equal .
2. Diesel: Aluminum body and spout with 15/16" O.D., automatic-type, with full rubber hand insulator, Model No. 1A, color-coded "Yellow" as manufactured by Husky Corporation, or an approved equal.
3. High Flow Diesel: Aluminum body and spout with 1-3/16" O.D., automatic type, with full rubber hand insulator, Model No. 7H-0900, color-coded "Yellow" as manufactured by OPW, or an approved equal.

2.10 AUTOMATED FUEL MANAGEMENT SYSTEM:

A. Subject to compliance with requirements, the automated fuel management system shall be a FUELMASTER FMU2500 as manufactured by SYN-TECH Systems, Inc. (telephone number 1-800-888-9136). No "or equals" will be permitted. The automated fuel management system (hereinafter referred to as the system) is required to be fully compatible with all requirements of the ConnDOT Standard Automated Fuel Management System including, but not limited to, the following:

1. The ability to interface with the existing central location (Headend), located at 2800 Berlin Turnpike, Newington, CT.
2. The ability to accept the existing ConnDOT issued read/write keys.
3. Interface with the tank monitoring system specified in CSI Division 13 Section 132180, “Tank Monitoring System.”

B. The system shall include the following operational requirements:

1. Allow for unattended operation, seven days a week, 24 hours a day.
2. Turn fuel dispensers on and off.
3. Monitor and record up to 8 hoses dispensing simultaneously.
4. Lock out any unauthorized keys.
5. Limit the fueling product options for any key.

C. The system shall include the following components:

1. Fuel Management Unit (FMU): Flexible, modular design, to accept any future system upgrades, with the following features: key reader, LCD display to prompt vehicle operators, control keys for data input by vehicle operators, and surge suppressor. FMU shall be suitable for outdoor installation, being capable of resisting the affects or rain, snow, and blowing sand. FMU shall have an operating temperature range of -60 to 140° Fahrenheit. FMU shall have the ability to store all collected data for 3 months. Memory shall be removable, with the capability of being installed in an operational FMU for data recovery.
2. Dispenser-Mounted Pulse Transmitters: Individually set for any number of pulses from 1 to 1000 for each unit of measurement for every hose on every dispenser.
3. Communications Interface (Network Card): Provides the tank monitoring system pass-through capability so that the tank monitoring and fuel management reports are uploaded to the Headend via 10/100 Ethernet communications.

D. The following information shall be recorded by the system for each fueling transaction: user identification number, vehicle odometer/hourmeter, vehicle number, quantity of fuel dispensed, fuel site, date and time, hose number and product number, and key type.

2.11 FUEL CONTROL CENTER:

A. Panelboards: Comply with requirements in CSI Division 26 Section 262416, "Panelboards".

B. Shunt Trip Device: Comply with requirements in CSI Division 26 Section 262816, "Enclosed Switches and Circuit Breakers ".

C. Emergency Shut-off (Quick Stop Buttons): Provide on exterior of building and at Fuel Control Center. The quick stop button functions to remove power by depressing the red mushroom-shaped button. Power restored by manually resetting the shunt trip breaker

and turning the button clockwise a partial turn until it pops back out to the reset position.

D. Emergency Telephone: Weather-resistant, wall mounted, ADA compliant emergency telephone that provides two-way communications with the press of a single button. Enclosure shall be cast aluminum with epoxy safety yellow finish, NEMA 3R rated with an LED providing visual indication that a call was received and "HELP" label with braille located next to the pushbutton. Device shall not require any battery or external power. Provide Red Alert Model No. 393AL-001 as manufactured by GAI-Tronics or an approved equal. Provide line seizure relay Model No. LSR-1 as manufactured by Viking Electronics or an approved equal, to allow an existing phone line to be shared with an emergency telephone.

E. Fuel Island Signage: Locate as directed by Engineer.

1. Material and Thickness: Multilayer, multicolor, plastic labels for mechanical engraving, 1/16 inch thick, and having predrilled holes for attachment hardware.
2. Letter Color: Red.
3. Background Color: White.
4. Minimum Label Size: Length and width vary for required label content, but not less than 2-1/2 by 3/4 inch.
5. Minimum Letter Size: 1/4 inch for name of units if viewing distance is less than 24 inches, 1/2 inch for viewing distances up to 72 inches, and proportionately larger lettering for greater viewing distances. Include secondary lettering two-thirds to three-fourths the size of principal lettering.
6. Fasteners: Suitable for mounting to masonry.
7. Label Content (Fuel Island): Label shall read as follows:

EMERGENCY ISLAND POWER SHUTOFF
AND PHONE LOCATED ON BUILDING

PHONE WILL AUTOMATICALLY CALL 911
UPON ACTIVATION

STAY OUTSIDE OF VEHICLE DURING FUELING AND
IN SIGHT OF NOZZLE DURING DISPENSING

IN CASE OF FIRE OR SPILL USE
EMERGENCY STOP BUTTON ON BUILDING

REPORT INCIDENT USING EMERGENCY PHONE

8. Label Content (Emergency Phone): Label shall read as follows:

EMERGENCY
POWER SHUTOFF
AND PHONE

F. Disconnect Switches: These disconnects shall switch the neutral conductor used for the control circuits in the dispensers. Comply with requirements in CSI Division 26 Section 262816, "Enclosed Switches and Circuit Breakers ".

G. Switches: Comply with requirements in CSI Division 26 Section 262726, "Wiring Devices".

H. Surface Mounted Communication Jack: RJ45 jack that fits in a single gang opening with one (1) receptacle, color orange, for Category 6.

I. Conduit: Comply with requirements in CSI Division 26 Section 260533, "Raceways and Boxes for Electrical Systems".

J. Wire: Comply with requirements in CSI Division 26 Section 260519, "Low-Voltage Electrical Power Conductors and Cables ".

K. Submersible Pump Control Boxes: Single-phase control box with contactor relay and dispenser hook isolation. Control boxes shall be Model No. 880-047-1, as manufactured by Red Jacket, or an approved equal.

L. Explosionproof Junction Boxes: Comply with requirements in CSI Division 26 Section 260533, "Raceways and Boxes for Electrical Systems".

M. Explosionproof Fittings: Comply with requirements in CSI Division 26 Section 260533, "Raceways and Boxes for Electrical Systems".

2.12 FIRE EXTINGUISHERS:

A. NFPA Compliance: Fabricate and label fire extinguishers to comply with NFPA 10, "Portable Fire Extinguishers."

B. Listed and labeled for type, rating, and classification by an independent testing agency acceptable to authorities having jurisdiction.

1. Provide fire extinguishers approved, listed, and labeled by UL or FMG.

C. Fire Extinguishers: UL-rated 40-B:C.

1. Available Manufacturers: Subject to compliance with requirements, available manufacturers offering products that may be incorporated into the Work include, but are not limited to, the following:

a. Amerex Corporation.
b. Kidde Residential and Commercial Division; Subsidiary of Kidde plc.
c. Potter Roemer LLC.
d. Tyco Fire Protection Products

D. Fire-Protection Cabinet: Subject to compliance with requirements, provide Model No. FT-POLY-CAB as manufactured by Brooks Equipment Company, Inc., or approved equal.

1. Cabinet Type: Suitable for fire extinguisher.
2. Cabinet Construction: Weatherproof, suitable for outdoor installation.
3. Cabinet Material: Nonmetallic with UV inhibitors, or metallic with rust protection.
4. Surface-Mounted Cabinet: Cabinet box fully exposed and mounted directly on surface with no trim.
5. Door Style: Match cabinet material.
6. Door Glazing: Clear, transparent break-style glass or acylic.
7. Door Hardware: Manufacturer's standard door-operating hardware.
8. Accessories:
   a. Mounting Bracket: Manufacturer's standard steel, designed to secure fire extinguisher to fire-protection cabinet, of sizes required for types and capacities of fire extinguishers indicated, with plated or baked-enamel finish.
   b. Break-Glass Strike: Manufacturer's standard metal strike, complete with chain and mounting clip, secured to cabinet.
   c. Door Lock: Cylinder lock.
   d. Identification: Lettering complying with authorities having jurisdiction for letter style, size, spacing, and location.
      1) Identify fire extinguisher in fire-protection cabinet with the words "FIRE" or “FIRE EXTINGUISHER”.
         a) Location: Applied to cabinet sides and/or cabinet door.

PART 3 - EXECUTION

3.1 EXCAVATION AND BACKFILL:

A. Refer to 816 Section 2.02, “Roadway Excavation, Formation of Embankment and Disposal of Surplus Material” and Section 2.05, “Trench Excavation” for excavating, trenching, and backfilling requirements.

B. Granular Fill shall be installed in accordance with Form 816 Article 2.13 beneath the concrete pads and apron as indicated on the plans. Protect buried items during compaction.

1. Concrete Pads: Provide a minimum of 6-inches of granular fill for concrete pads, compacted to support the concrete pad installation.

C. No backfilling over any underground piping or electrical connections may take place until the work is inspected by the Engineer and the authorities having jurisdiction. Failure to have work inspected will result in the Contractor uncovering work to allow for inspection.

3.2 OUTDOOR PIPING INSTALLATION:

A. Install metal pipes and tubes, fittings, and valves at piping connections to AST.

B. Support product piping with galvanized strut mast and pipe clamp mounted to the tank, tank pad, and metal beam rail posts. Support product piping at a minimum height of 6 inches above grade or as directed by Engineer and provide supports every 8-feet of horizontal run.

C. Install fittings for changes in direction in rigid pipe.

D. Install system components with pressure rating equal to or greater than system operating pressure.

3.3 VALVE INSTALLATION:

A. Install valves in accessible locations.

B. Protect valves from physical damage.

3.4 PIPING JOINT CONSTRUCTION:

A. Ream ends of pipes and tubes and remove burrs.

B. Remove scale, slag, dirt, and debris from inside and outside of pipe and fittings before assembly.

C. Threaded Joints: Thread pipe with tapered pipe threads according to ASME B1.20.1. Cut threads full and clean using sharp dies. Ream threaded pipe ends to remove burrs and restore full ID. Join pipe fittings and valves as follows:

1. Apply appropriate tape or thread compound to external pipe threads unless dry seal threading is specified.
2. Damaged Threads: Do not use pipe or pipe fittings with threads that are corroded or damaged. Do not use pipe sections that have cracked or open welds.

3.5 PAINTING:

A. Paint exposed, exterior metal piping and piping specialties, except components with factory-applied paint or protective coating.

1. Alkyd System: MPI EXT 5.1D.

a. Prime Coat: Alkyd anticorrosive metal primer.
b. Intermediate Coat: Exterior alkyd enamel matching topcoat.
c. Topcoat: Exterior alkyd enamel

d. Color: Gray

3.6 MOTOR FUEL AST INSTALLATION:

A. Excavate as described herein and as shown on the Plans.

B. Set tank on concrete pad and anchor in accordance with manufacturer's instructions.

1. Install bearing pads as recommended by manufacturer.

C. Each component of the storage tank system shall be installed as shown on the Plans and in accordance with manufacturer recommendations. Additional installation requirements of the storage tank system are described in subsequent portions of this Section where applicable.

D. Connect piping.

E. Pressure Testing of Tank and Piping: Refer to Part 3.7, "Field Quality Control."

F. Supplying Fuel:

1. Refer to Part 1.8 "Coordination" for filling tanks. Supply appropriate fuel in accordance with specifications set forth in the most current State of Connecticut, Department of Administrative Services contract award for:

- 0035-066 - Gasoline, Automotive Unleaded
- 0035-042 - Diesel Fuel No. 1 & 2

2. To determine product suitability for application into State equipment, Contractor will be responsible for testing sample from tanker at time of delivery. Written results of testing will be provided within 7 days to the Engineer. Contracts with corresponding detailed specifications can be obtained by accessing the State of Connecticut, Department of Administrative Services' website at http://das.ct.gov/Purchase/Commodity.htm.
3. Prior to the issuance of the Certificate of Compliance, the Contractor shall fill all motor fuel tanks in accordance with the Contract requirements.

G. Apply Hazard Sign directly to tank in a visible location.

1. Hazard ratings for Diesel:

a. Health (Blue): 0
b. Fire (Red): 2
c. Instability (Yellow): 0
d. Special Hazard (White): None

2. Hazard ratings for Gasoline.

a. Health (Blue): 1
b. Fire (Red): 3
c. Instability (Yellow): 0
d. Special Hazard (White): None

3.7 FIELD QUALITY CONTROL:

A. Perform tests and inspections.

1. Tanks: Hydrostatic or compressed-air test pressures for horizontal, shop-fabricated, aboveground storage tanks: Isolate product piping from the tanks during testing. In-tank probes shall not be installed in the tanks during testing. Maintain the test pressure for one hour.

a. Primary Tanks: Minimum 3 psig and maximum 5 psig.

2. Piping: Minimum hydrostatic or pneumatic test-pressures measured at highest point in system. Soap pipe fittings.

a. Product Piping: Minimum 1.5 times the designed working pressure but not less than 50 psig nor more than the manufacturer's recommended pressure rating for minimum 3 hours.
b. Isolate storage tanks if test pressure in piping will cause pressure in storage tanks to exceed 10 psig.

B. Piping and equipment will be considered defective if it does not pass tests and inspections. Defective piping and equipment shall be repaired or replaced, and then retested.

C. Prepare test and inspection reports.

3.8 FUEL DISPENSERS:

A. Bolt fuel dispensers into place and make all necessary piping connections. Secure shear valves to dispensers. Dispenser pedestal shall be anchored to the concrete with stainless steel anchors. High hose retractors shall be anchored to the concrete with stainless steel anchors.

3.9 AUTOMATED FUEL MANAGEMENT SYSTEM:

A. The automated fuel management system Installer shall provide a fully operational system including, but not limited to, the following:

1. Fuel Management Unit (FMU)
2. Dispenser-Mounted Pulse Transmitters and all necessary conduit

3. Communications Interface (Network Card): Provides the tank monitoring system pass-through capability so that the tank monitoring and fuel management reports are uploaded to the Headend via 10/100 Ethernet communications.
4. The following information shall be recorded by the system for each fueling transaction: user identification number, vehicle odometer/hourmeter, vehicle number, quantity of fuel dispensed, fuel site, date and time, hose number and product number, and key type.
5. Coordinate with ConnDOT Fuel Control for FMU configuration.
6. Coordinate network communications with ConnDOT network administrator.

B. Power Requirements for FMU: 120 volts, 60 Hz, from a separate, dedicated circuit from the Fuel Control Center Panel.

C. FMU shall be anchored to the concrete only with stainless steel hardware.

3.10 FUEL CONTROL CENTER:

A. Install all necessary conduit and wiring. A green bond wire shall be run in all conduit, terminating at Fuel Control Center Panel.

B. Conduit from the building to the base of each dispenser, submersible pump, FMU, level sensors, and island light fixture shall be provided with explosionproof fittings.

C. All E.Y. fittings shall be properly sealed. Leave close-up plugs hand tight after sealing to provide for inspection of these fittings.

D. Install junction boxes beneath dispensers to facilitate future maintenance.

E. Each submersible pump shall have a separate, dedicated circuit from Fuel Control Center Panel, wired through its own disconnect switch, control box, and dispenser hook isolation. The solenoid valve shall be powered and controlled from the submersible pump control box.

3.11 FIRE EXTINGUISHERS:

A. Examine fire extinguishers for proper charging and tagging.

1. Remove and replace damaged, defective, or undercharged fire extinguishers.

B. Proceed with installation only after unsatisfactory conditions have been corrected.

C. General: Install fire extinguishers**,** mounting brackets, and fire-protection cabinet in locations indicated on the plans and in compliance with requirements of authorities having jurisdiction, 54 inches above finished grade to top of fire extinguisher.

D. Fire-Protection Cabinet: Fasten cabinets to surface, square and plumb.

1. Fasten mounting bracket to inside surface of fire-protection cabinets, square and plumb.

E. Remove temporary protective coverings and strippable films, if any, as fire-protection cabinets are installed unless otherwise indicated in manufacturer's written installation instructions.

F. Adjust fire-protection cabinet doors to operate easily without binding. Verify that integral locking devices operate properly.

G. On completion of fire-protection cabinet installation, clean interior and exterior surfaces as recommended by manufacturer.

H. Touch up marred finishes, or replace fire-protection cabinets that cannot be restored to factory-finished appearance. Use only materials and procedures recommended or furnished by fire-protection cabinet and mounting bracket manufacturers.

I. Replace fire-protection cabinet that have been damaged or have deteriorated beyond successful repair by finish touchup or similar minor repair procedures.

3.12 DISPENSER ISLAND, APRON, AND PAD FOR TANKS:

A. Construct the concrete apron with bollards, and pads for the tanks, dispensers, and FMU as shown on the Plans. Concrete installation requirements are specified in CSI Division 03 Section 033000, “Cast-in-Place Concrete.”

3.13 PIPING SCHEDULE:

A. Product Piping, Aboveground: 1-1/2-inch black steel pipe and pipe fittings.

B. Thermal Pressure Relief Piping: 1/2-inch black steel pipe and pipe fittings.

C. AST Pipe Risers: 4-inch galvanized steel pipe and fittings.

D. AST Vent Pipe and Fittings, Aboveground: 2-inch galvanized steel pipe and pipe fittings.

3.14 TRAINING:

A. Refer to Form 816 Article 1.20-1.08.14 subsection 3 for additional information.

B. Engage a factory-authorized service representative for the automated fuel management system for a 4-hour on-site class to train the Owner’s maintenance personnel on all operating, routine maintenance, and service procedures. Provide copies of all training materials to all in attendance.

END OF SECTION 132160

SECTION 132180 - TANK MONITORING SYSTEM

PART 1 - GENERAL

1.1 SUMMARY:

A. This Section includes three complete tank monitoring systems for aboveground and underground storage tanks as indicated on the Plans.

B. Each component of the tank monitoring system shall be compatible with the dispensing of E85 Ethanol. Where model numbers are used herein, but are not compatible with E85 Ethanol, the appropriate E85 Ethanol compatible component shall be supplied at no additional cost to the Engineer.

C. The following contain requirements that relate to this Section:

1. CSI Division 13 Section 132160, "Installation of New Fuel Facility."
2. CSI Division 22 Section 221325, "Oil-Water Separator."

1.2 ACTION SUBMITTALS:

A. Submit the following in accordance with Form 816 Article 1.20-1.05.02 and NOTICE TO CONTRACTOR – SUBMITTALS.

B. Product Data: Include rated capacities of selected model clearly indicated, furnished specialties and accessories; wiring diagrams; and installation and start-up instructions.

1. Spare Parts: Include name, address, and telephone number of in-state supplier of spare parts. No out-of-state suppliers shall be permitted.
2. Include sequence of operation for monitoring of oil-water separator.

1.3 INFORMATIONAL SUBMITTALS:

A. Quality Assurance Submittals:

1. Installer Certifications as specified in Part 1.5, "Quality Assurance."
2. Field quality control test reports as specified in Part 3.3, "Field Quality Control."

1.4 CLOSEOUT SUBMITTALS:

A. Operation and Maintenance Data: Include in the operation and maintenance manuals specified in Form 816 Article 1.20-1.08.14 subsection 2 and described in NOTICE TO CONTRACTOR – CLOSEOUT DOCUMENTS.

1.5 QUALITY ASSURANCE:

A. The tank monitoring system manufacturer shall identify the approved distributor and repair staff located within a 50 mile radius of the Project Site, staffed with factory trained engineers fully capable of providing instruction, routine maintenance and 24 hour emergency repair service on all system components. Emergency repair service is to be available within a 24-hour period of time. Spare parts required for the system installed should be available within 2-4 calendar days.

B. The Tank Monitoring System Installer shall provide the engineering, installation, calibration, software programming and check-out necessary for a complete and fully operational tank monitoring system.

C. The Tank Monitoring System Installer shall be a certified to program and start-up the system.

D. The Tank Monitoring System Installer shall have:

1. Adequate experience and verifiable history in the installation of tank monitoring systems matching the criteria defined in this Specification.
2. Proven expertise and experience in dealing with coordination of installing tank monitoring systems for municipal fueling facilities.

PART 2 - PRODUCTS

2.1 MANUFACTURERS:

A. Available Manufacturers: Subject to compliance with requirements, manufacturers offering products that may be incorporated into the Work are limited to the following:

1. Pneumercator.

B. "Or Equal" manufacturers will not be considered for this project due to the need to interface with the existing tank monitoring system console (Model No. TMS-3000).

C. The system is <u>required</u> to be fully-compatible with the existing ConnDOT standard Automated Fuel Management System, including the ability to interface with the Headend through a field installed network interface card compatible with the existing tank monitoring system console.

2.2 CONSOLE:

A. Communications Wiring and Devices. The system shall have a minimum of 4 communications ports with the following capabilities:

1. The ability to communicate with locally attached electronic devices (FMU and printer) through RS-232 ports.
2. The system shall have the ability to communicate with a remote location via a network connection. An internal network card (Part No. 900571-3) shall be installed within the console along with the replacement of the processor (Part No. 900430-1).

2.3 IN-TANK PROBES:

A. The probes shall be magnetostrictive type suitable for leak detection and inventory management in both underground and aboveground storage tanks. Unless otherwise noted, probes shall include 2 floats (product and water), and shall also include a minimum of 5 temperature sensors along its length to allow product temperature averaging.

1. Temperature measurement accuracy of +/- 0.5°.
2. Level measurement accuracy of +/- .0005-inch.

B. The probes shall be gasoline, ethanol, benzene, and oil-resistant. The probes shall be UL-listed as intrinsically safe and shall utilize digital or time-based transmission techniques for high noise immunity and fault detection.

C. Leak Detection: Capable of manually or automatically performing a static tank tightness test to an accuracy of 0.1-gph, with a 99% probability of detection [P(D)] and a 1% probability of false alarm [P(FA)].

1. System shall be third-party certified to be in accordance with EPA standards for 0.1-gph annual tightness test and for 0.2-gph monthly monitoring.

D. The probes shall be capable of continuously gauging the water level from within 0.75-inch off of the bottom of the tank to a depth of at least 10-inches for riser pipe installations.

E. For oil-water separator applications, the probes shall be capable of continuously gauging the product and water levels from within 3-inches off the bottom of the tank. The system shall automatically calculate and output the volume (gallons) and level (inches) of product and of water in the oil-water separator.

F. The probes shall be supplied with the manufacturer's standard probe installation kits and wiring.

2.4 INTERSTITIAL SENSORS:

A. Wet Monitoring:

1. The hydrostatic sensors shall perform automatic, continuous leak sensing by monitoring the liquid level in the reservoir of a brine-filled interstitial space (annulus) of double-wall tanks, to detect a breach in the inner or outer shell. Single float sensors shall include a float and reed switch assembly. The contact shall be a normally closed dry contact.
2. The sensors shall be unaffected by hydrocarbon vapors, and shall be easily installed and removed without damage. Sensors shall be field replaceable, reusable, and testable for regulatory purposes.
3. The sensors shall be supplied with a lockable, watertight riser cap to prevent accidental spills into the tank reservoir. The cap shall be equipped with a vent tube to vent air out of the reservoir area and prevent liquids from entering into the reservoir.
4. The sensors shall be supplied with the manufacturer's standard sensor installation kits and wiring.

B. Dry Monitoring:

1. The sensors shall perform automatic, continuous leak sensing by monitoring the dry interstitial space (annulus) of double wall tanks. Sensors shall be a non-discriminating type, sensing only wet or dry conditions.
2. The sensors shall be unaffected by hydrocarbon vapors, and shall be easily installed and removed without damage. Sensors shall be field replaceable, reusable, and testable for regulatory purposes.
3. The sensors shall be supplied with the manufacturer's standard sensor installation kits and wiring.

2.5 TANK OVERFILL ALARM:

A. Remote external audible and visual overfill alarm annunciator shall be housed in a weatherproof enclosure. The overfill alarm shall activate if a tank product level reaches the overfill alarm setpoint of 90% capacity.

B. Remote alarm acknowledge unit shall be housed in a weatherproof enclosure. Acknowledge unit shall silence audible and visual overfill alarms.

2.6 SOFTWARE:

A. Network Communications for Remote Alarming/Reporting:

1. The manufacturer shall provide its communications/database software package and license (Headend) to poll remote tank monitoring sites from a total of five (5) locations, including the central location (2800 Berlin Turnpike, Newington, CT), via a network connection.
2. The Headend operator shall connect to remote sites by selecting the user-definable name associated with the site.

3. The Headend operator shall be able to connect to the system and gain access to the full control, reporting, troubleshooting, and system modification capabilities described in this specification.
4. The Headend shall provide a communications mode, in which it can automatically and continuously poll locations that have been designated for data retrieval, and store data in a standard database format.
5. The system shall have the ability to automatically upload all alarms, reports, logs, and other features as described in this specification. The software package shall provide the ability to program the system from remote locations.
6. In the event that the system is unable to connect with the Headend, it shall continue to attempt communication on a predetermined interval until communication is successful.
7. The stored data shall be easily transferable to other software packages, such as spreadsheets, database packages, etc., for data manipulation.

B. Reports and Logs. The following reports and logs shall be provided for each tank as indicated on the Plans:

1. Environmental Compliance Reports. The system shall have the ability to capture the following environmental compliance reports, as well as to provide hard copies of these reports at the console.

   a. In-Tank Warnings and Alarms.
   b. In-Tank Tightness Test Results.
   c. Liquid Sensor Warnings and Alarms.
   d. System Hardware and Software Errors.
   e. System Status Messages.
   f. Normally-closed Sensor warning and alarm conditions.
   g. External input messages.

2. The system shall also generate hard copy reports at the console for system errors, system clock and calendar, and system setup and configuration data.

C. Reports and Logs. The following reports and logs shall be provided for each gasoline tank and diesel fuel tank as indicated on the Plans.

1. Inventory Management Reports shall be generated for each tank either automatically a minimum of three times per day (programmable) or manually. In addition to the system capturing this data, hard copies of the reports will be generated at the console. Inventory Reports shall include the tank identification, product name, time and date, product level and volume, water level and volume, product temperature, gross volume, temperature compensated net volume, percent capacity, 90% ullage, and last in-tank leak test result.
2. Product Delivery Reports shall be generated for each tank automatically after a delivery to the tank is complete. In addition to the system capturing this data, hard copies of the report will be generated at the console. Fuel Delivery Reports shall include the tank identification, product name, time and date, starting and

ending product levels and volumes, starting and ending product temperatures, and the net product volume increase.

3. Product Order Reports shall be manually generated for each tank. In addition to the system capturing this data, hard copies of the reports will be generated at the console. Fuel Order Report shall include the average daily product usage calculated from the last delivery, the total and usable inventory, the remaining product supply in days, and the maximum order amount (90% ullage) at the time of report generation.
4. Water Removal Report shall be generated for each tank automatically upon the removal of water from each tank. In addition to the system capturing this data, hard copies of the reports will be generated at the console. Water Removal Reports shall include the tank identification, product name, time and date; and starting and ending product volumes, water volumes, gross volume, percent capacities, and 90% ullage.

D. Alarms.

1. The system shall provide audible and visual indication of all system, in-tank leak (3.0-gph, 0.2-gph, and 0.1-gph failures), and external sensor (product, water, sensor out) alarm conditions. The system shall also capture this data, and hard copies will be generated.
2. The system shall provide the operator the ability to disable the audible portion of an alarm. The visual portion of an alarm shall not be disabled until the alarm condition has been corrected.
3. The system alarms include:

    a. High High Limit (Overfill).
    b. High Limit.
    c. Low Inventory Limit
    d. High Water Limit.
    e. Temperature.
    f. Theft.
    g. Delivery needed alarm.
    h. Periodic warning and alarm.
    i. Annual warning and alarm.
    j. Non-IS contact closure input.
    k. IS (liquid) sensor input.
    l. System error.
    m. Power recovery.
    n. Leak Test Failed.

4. The product limit alarms identified in subpart a, b, and c in Part 3 above shall be programmable in units of volume, percent volume, or level.
5. The operator shall have complete programming control to determine which alarm conditions, if any, shall control pumps, valves, or any other devices. Unless the system is set up to shut part of the system down on alarm, system shall remain operational during all alarm conditions.

E. Diagnostics and Troubleshooting.

1. The system shall provide the manufacturer's standard diagnostic and troubleshooting capabilities to facilitate field service. These capabilities shall include, but are not limited to, the following:

   a. Identifying the location of the malfunction, whether in the field or console.
   b. The system shall be capable of detecting and reporting corruption of configuration and set-up data. Affected system function(s) shall be disabled until corruption is corrected.
   c. The system shall be capable of limiting the range of selections on input to only "acceptable" values, or the system shall be capable of scanning operator-entered configuration and set-up data to check for "acceptable" values. Values that result in improper calculations or required entries that have not been defined by the operator shall generate a warning report, and shall disable the affected system function(s).
   d. The system shall be capable of detecting and reporting a power-up sequence, including power loss and recovery dates and times.
   e. The system shall be capable of ensuring the integrity of its hardware and software.
   f. Supervised wiring between the console and the interstitial sensors to identify short or open circuited wiring. System shall identify fault to the failed sensor.
   g. Supervised wiring between the console and the in-tank probes to detect a fault, either as failed hardware or as a result of faulty wiring. System shall identify fault to the tank.

2. The system shall generate hard copy reports of the diagnostic information, including the alarm history and alarm status at the console.

2.7 RELATED ELECTRICAL WORK:

A. Conduit: Comply with requirements in CSI Division 26 Section 260533, "Raceway and Boxes for Electrical Systems".

B. Explosionproof Fittings: Comply with requirements in CSI Division 26 Section 260533, "Raceway and Boxes for Electrical Systems".

PART 3 - EXECUTION

3.1 EXAMINATION:

A. Examine areas and conditions under which the tank monitoring system is to be installed. Do not proceed with work until unsatisfactory conditions have been corrected in manner acceptable to the Tank Monitoring Installer.

3.2 INSTALLATION REQUIREMENTS:

A. All probe and leak sensor inputs shall be protected against damage from short circuit conditions due to inadvertent field wiring errors.

B. In-tank Probes.

1. Probes, probe installation kits, and wiring shall be installed according to manufacturer-supplied installation manuals and Plans.
2. Probe assemblies for monitoring product and water levels are required for all storage tanks as indicated on the Plans.
3. Probe assemblies in underground storage tanks shall top-mount from a 4-inch diameter probe riser pipe. Riser installation is not work of this Section; risers shall be installed by the applicable CSI Section and as indicated on the Plans.
4. Probe leader cables to connect inside watertight junction box, sealed off with an explosion proof fitting, for connection to console.

C. Interstitial Sensors:

1. Sensors and wiring shall be installed according to manufacturer-supplied installation manuals and plans.
2. Sensors for monitoring the interstitial spaces are required for all double-wall underground and aboveground storage tanks as indicated on the Plans.
3. Sensor Assemblies:
   a. Underground Storage Tanks: Top-mount in a 4-inch diameter sensor riser pipe installed in the annulus of the tank. Riser installation is not work of this Section; risers shall be installed by the applicable CSI Section and as indicated on the Plans.
   b. Aboveground Storage Tanks: Top-mount in factory installed 2” nipple through monitor pipe/leak detector tube.
4. Sensor leader cables to connect inside watertight junction box, sealed off with an explosion proof fitting, for connection to console.

D. Tank Overfill Alarm:

1. Remote alarm annunciator and acknowledge unit wiring shall be installed according to manufacturer-supplied installation manuals.
2. The alarm light shall be visible and the alarm horn shall be audible within the fuel tank filling area.
3. The acknowledge unit shall be accessible to the tank filling attendant.
4. Remote alarm annunciator and acknowledge unit shall be mounted near the tank filling sites for the gasoline and diesel fuel tanks and for the fuel oil tank as indicated on the Plans.

E. Console shall be mounted and wired according to manufacturer-supplied installation manuals, with all intrinsically safe field wiring enclosed in dedicated conduit and separate from all other wiring. The system's high voltage wiring may share existing

conduit with other high voltage devices in accordance with applicable guidelines published in the NEC.

F. Console power requirements: 120-volts, 60-Hz, from a separate, dedicated circuit from the Fuel Control Center panel.

G. Related Electrical Work: Install conduit. Seal E.Y. fittings. Leave close-up plugs hand tight after sealing to provide for inspection of these fittings.

3.3 FIELD QUALITY CONTROL:

A. Engage a factory-authorized service representative to inspect and test the system and to perform start-up service. Power shall not be applied to the system prior to start-up.

B. Perform all necessary testing and run diagnostic tests to ensure proper operation. Test equipment as recommended by manufacturer. Generate all software and enter all database information necessary to perform the sequence of control and specified software routines.

1. An acceptance test shall be performed in the presence of the Engineer.

C. The manufacturer shall provide a written certification of installation, start-up, and calibration of the complete system.

D. The manufacturer shall supply third-party documentation for all products certifying that the performance meets or exceeds EPA requirements.

3.4 TRAINING:

A. Refer to Form 816 Article 1.20-1.08.14 subsection 3 for additional information.

B. Engage a factory-authorized service representative for an 8-hour on-site class to train Owner's maintenance personnel on all installation, programming, troubleshooting, operating, routine maintenance, and service procedures.

END OF SECTION 132180

SECTION 223400 - FUEL-FIRED, DOMESTIC-WATER HEATERS

PART 1 - GENERAL

1.1 SUMMARY:

A. Section Includes:

1. Pipe, tube, and fittings.
2. Commercial, power-burner, gas-fired, storage, domestic-water heaters.
3. Domestic-water heater accessories.

1.2 ACTION SUBMITTALS:

A. Submit the following in accordance with Form 816 Article 1.20-1.05.02 and NOTICE TO CONTRACTOR – SUBMITTALS.

B. Product Data: For the following:

1. Pipe, tube, and fittings.
2. For each type and size of domestic-water heater indicated. Include rated capacities, operating characteristics, electrical characteristics, and furnished specialties and accessories.

a. Spare Parts: Include name, address, and telephone number of in-state supplier of spare parts. No out-of-state suppliers shall be permitted.

C. Shop Drawings:

1. Wiring Diagrams: For power, signal, and control wiring.

1.3 INFORMATIONAL SUBMITTALS:

A. Quality Assurance Submittals:

1. Manufacturer Certification Letter in accordance with NOTICE TO CONTRACTOR – POTENTIAL FOR ASBESTOS CONTAINING MATERIALS.
2. Source quality-control reports.
3. Water Samples: Specified in Part 3.6, “Cleaning”.
4. Field quality-control reports.

1.4 CLOSEOUT SUBMITTALS:

A. Operation and Maintenance Data: For fuel-fired, domestic-water heaters to include in the operation, and maintenance manuals specified in Form 816 Article 1.20-1.08.14 subsection 2 and described in NOTICE TO CONTRACTOR – CLOSEOUT DOCUMENTS.

B. Warranties: Special warranties specified in Part 1.6 “WARRANTY.”

1.5 QUALITY ASSURANCE:

A. Electrical Components, Devices, and Accessories: Listed and labeled as defined in NFPA 70, by a qualified testing agency, and marked for intended location and application.

B. ASHRAE/IESNA Compliance: Fabricate and label fuel-fired, domestic-water heaters to comply with ASHRAE/IESNA 90.1.

C. ASME Compliance:

1. Where ASME-code construction is indicated, fabricate and label commercial, domestic-water heater storage tanks to comply with ASME Boiler and Pressure Vessel Code: Section VIII, Division 1.

D. NSF Compliance: Fabricate and label equipment components that will be in contact with potable water to comply with NSF 61, "Drinking Water System Components - Health Effects."

1.6 WARRANTY:

A. Refer to Form 816 Article 1.20-1.06.08 and NOTICE TO CONTRACTOR – CLOSEOUT DOCUMENTS for additional information.

B. Special Warranty: Manufacturer's standard form in which manufacturer agrees to repair or replace components of fuel-fired, domestic-water heaters that fail in materials or workmanship within specified warranty period.

1. Failures include, but are not limited to, the following:

a. Structural failures including storage tank and supports.
b. Faulty operation of controls.
c. Deterioration of metals, metal finishes, and other materials beyond normal use.

2. Warranty Period for Storage Tank: From the issuance of the Certificate of Compliance: 10 years. The first 5 years shall be unlimited with the 6th through 10th years pro-rated.

PART 2 - PRODUCTS

2.1 PIPING MATERIALS:

A. Comply with requirements in Part 3.7 "Piping Schedule" for applications of pipe, tube, fitting materials, and joining methods for specific services, service locations, and pipe sizes.

B. Potable-water piping and components shall comply with NSF 14 and NSF 61. Plastic piping components shall be marked with "NSF-pw."

2.2 COPPER TUBE AND FITTINGS:

A. Hard Copper Tube: ASTM B 88, Type L water tube, drawn temper.

B. Cast-Copper, Solder-Joint Fittings: ASME B16.18, pressure fittings.

C. Wrought-Copper, Solder-Joint Fittings: ASME B16.22, wrought-copper pressure fittings.

D. Copper Unions:

1. MSS SP-123.
2. Cast-copper-alloy, hexagonal-stock body.
3. Ball-and-socket, metal-to-metal seating surfaces.

2.3 COMMERCIAL, GAS-FIRED, STORAGE, DOMESTIC-WATER HEATERS:

A. Commercial, Power-Burner, Gas-Fired, Storage, Domestic-Water Heaters:

1. Basis-of-Design Product: Subject to compliance with requirements, provide Model No. 51PG as manufactured by Bock Water Heaters, Inc. or an approved equal.
2. Standard: ANSI Z21.10.3/CSA 4.3.
3. Storage-Tank Construction: ASME-code steel with 150-psig working-pressure rating.

a. Tappings: Factory fabricated of materials compatible with tank. Attach tappings to tank before testing.

1) NPS 2 and Smaller: Threaded ends according to ASME B1.20.1.

b. Interior Finish: Comply with NSF 61 barrier materials for potable-water tank linings, including extending finish into and through tank fittings and outlets.

4. Factory-Installed Storage-Tank Appurtenances:

    a. Anode Rod: Replaceable magnesium.
    b. Dip Tube: Required unless cold-water inlet is near bottom of tank.
    c. Drain Valve: Corrosion-resistant metal complying with ASSE 1005.
    d. Insulation: Comply with ASHRAE/IESNA 90.1. Surround entire storage tank except connections and controls.
    e. Jacket: Steel with enameled finish.
    f. Burner: UL 795 for power-burner, gas-fired, domestic-water heaters and natural-gas fuel.
    g. Automatic Ignition: ANSI Z21.20/CSA C22.2 No. 199, electric, automatic, gas-ignition system.
    h. Temperature Control: Adjustable thermostat.
    i. Combination Temperature-and-Pressure Relief Valves: ANSI Z21.22/CSA 4.4-M. Include one or more relief valves with total relieving capacity at least as great as heat input, and include pressure setting less than domestic-water heater working-pressure rating. Select one relief valve with sensing element that extends into storage tank.

5. Draft Hood: Draft diverter, complying with ANSI Z21.12.

B. Capacity and Characteristics:

1. Capacity: 50 gal.
2. Recovery: 159 gph at 90 deg F temperature rise.
3. Temperature Setting: 140 deg F.
4. Fuel Gas Input: 152,000 Btu/h.
5. Gas Pressure Regulator:

    a. Inlet Pressure: 14 inches water column maximum.
    b. Gas Pressure Required at Burner: 3.5 inches water column minimum.

6. Electrical Characteristics:

    a. Volts: 120.
    b. Phase: Single.
    c. Hertz: 60.

7. Minimum Vent Diameter: 6 inches.

2.4 DOMESTIC-WATER HEATER ACCESSORIES

A. Piping-Type Heat Traps: Field-fabricated piping arrangement according to ASHRAE/IESNA 90.1 or ASHRAE 90.2.

B. Gas Shutoff Valves: ANSI Z21.15/CSA 9.1-M, manually operated. Furnish for installation in piping.

C. Gas Pressure Regulators: ANSI Z21.18/CSA 6.3, appliance type. Include pressure rating, capacity, and pressure differential as required to match gas supply.

D. Automatic Gas Valves: ANSI Z21.21/CSA 6.5, appliance, electrically operated, on-off automatic valve.

E. Combination Temperature-and-Pressure Relief Valves: Include relieving capacity at least as great as heat input, and include pressure setting less than domestic-water heater working-pressure rating. Select relief valves with sensing element that extends into storage tank.

1. Gas-Fired, Domestic-Water Heaters: ANSI Z21.22/CSA 4.4-M.

F. Emergency Shutoff Switch: Furnish to the Electrical Installer for installation where shown on the Plans.

2.5 SOURCE QUALITY CONTROL:

A. Factory Tests: Test and inspect assembled domestic-water heaters and storage tanks specified to be ASME-code construction, according to ASME Boiler and Pressure Vessel Code.

B. Hydrostatically test commercial domestic-water heaters and storage tanks to minimum of one and one-half times pressure rating before shipment.

C. Domestic-water heaters will be considered defective if they do not pass tests and inspections.

D. Prepare test and inspection reports.

PART 3 - EXECUTION

3.1 PIPING INSTALLATION:

A. Plans, schematics, and diagrams indicate general location and arrangement of domestic water piping. Indicated locations and arrangements are used to size pipe and calculate friction loss, expansion, and other design considerations. Install piping as indicated unless deviations to layout are approved by the Designer.

B. Install water-pressure-reducing valves downstream from shutoff valves. Comply with requirements for pressure-reducing valves in CSI Division 22 Section 221119 "Domestic Water Piping Specialties."

C. Install piping in equipment rooms and service areas at right angles or parallel to building walls. Diagonal runs are prohibited unless specifically indicated otherwise.

D. Install piping adjacent to equipment and specialties to allow service and maintenance.

E. Install piping to permit valve servicing.

F. Install nipples, unions, special fittings, and valves with pressure ratings the same as or higher than the system pressure rating used in applications below unless otherwise indicated.

G. Install piping free of sags and bends.

H. Install fittings for changes in direction and branch connections.

I. Install unions in copper tubing at final connection to each piece of equipment, machine, and specialty.

3.2 JOINT CONSTRUCTION:

A. Ream ends of pipes and tubes and remove burrs. Bevel plain ends of steel pipe.

B. Remove scale, slag, dirt, and debris from inside and outside of pipes, tubes, and fittings before assembly.

C. Soldered Joints for Copper Tubing: Apply ASTM B 813, water-flushable flux to end of tube. Join copper tube and fittings according to ASTM B 828 or CDA's "Copper Tube Handbook."

3.3 DOMESTIC-WATER HEATER INSTALLATION:

A. Install domestic-water heaters level and plumb, according to layout drawings, original design, and referenced standards. Maintain manufacturer's recommended clearances. Arrange units so controls and devices needing service are accessible.

B. Install gas-fired, domestic-water heaters according to NFPA 54.

1. Install gas shutoff valves on gas supply piping to gas-fired, domestic-water heaters without shutoff valves.
2. Install gas pressure regulators on gas supplies to gas-fired, domestic-water heaters without gas pressure regulators if gas pressure regulators are required to reduce gas pressure at burner.
3. Install automatic gas valves on gas supplies to gas-fired, domestic-water heaters if required for operation of safety control.
4. Comply with requirements for gas shutoff valves, gas pressure regulators, and automatic gas valves specified in CSI Division 23 Section 231123 "Facility Natural-Gas Piping."

C. Install combination temperature-and-pressure relief valves in top portion of storage tanks. Use relief valves with sensing elements that extend into tanks. Extend

commercial-water-heater relief-valve outlet, with drain piping same as domestic-water piping in continuous downward pitch, and discharge by positive air gap onto closest floor drain.

D. Install water-heater drain piping as indirect waste to spill by positive air gap into open drains or over floor drains.

E. Fill domestic-water heaters with water.

3.4 CONNECTIONS:

A. Comply with requirements for gas piping specified in CSI Division 23 Section 231123 "Facility Natural-Gas Piping."

B. Plans indicate general arrangement of piping, fittings, and specialties.

C. Where installing piping adjacent to fuel-fired, domestic-water heaters, allow space for service and maintenance of water heaters. Arrange piping for easy removal of domestic-water heaters.

3.5 FIELD QUALITY CONTROL:

A. Perform tests and inspections.

1. Manufacturer's Field Service: Engage a factory-authorized service representative to inspect components, assemblies, and equipment installations, including connections, and to assist in testing.
2. Leak Test: After installation, charge system and test for leaks. Repair leaks and retest until no leaks exist.
3. Operational Test: After electrical circuitry has been energized, start units to confirm proper operation.
4. Test and adjust controls and safeties. Replace damaged and malfunctioning controls and equipment.

B. Domestic-water heaters will be considered defective if they do not pass tests and inspections.

C. Prepare test and inspection reports.

3.6 CLEANING:

A. Clean and disinfect potable and non-potable domestic water piping as follows:

1. Purge new piping and parts of existing piping that have been altered, extended, or repaired before using.

2. Use purging and disinfecting procedures prescribed by authorities having jurisdiction; if methods are not prescribed, use procedures described in either AWWA C651 or AWWA C652 or follow procedures described below:

   a. Flush piping system with clean, potable water until dirty water does not appear at outlets.
   b. Fill and isolate system according to either of the following:

      1) Fill system or part thereof with water/chlorine solution with at least 50 ppm of chlorine. Isolate with valves and allow to stand for 24 hours.
      2) Fill system or part thereof with water/chlorine solution with at least 200 ppm of chlorine. Isolate and allow to stand for three hours.

   c. Flush system with clean, potable water until no chlorine is in water coming from system after the standing time.
   d. Repeat procedures if bacteriological or physical examination shows contamination.
   e. Submit water samples in sterile bottles to authorities having jurisdiction.

B. Prepare and submit reports of purging and disinfecting activities. Include copies of water-sample approvals from authorities having jurisdiction.

C. Clean interior of domestic water piping system. Remove dirt and debris as work progresses.

3.7 PIPING SCHEDULE:

A. Unions may be used for aboveground piping joints unless otherwise indicated.

B. Aboveground domestic water piping, NPS 2 and smaller, shall be the following:

1. Hard copper tube, ASTM B 88, Type L; cast- or wrought-copper, solder-joint fittings; and soldered joints.

END OF SECTION 223400

SECTION 230517 - SLEEVES AND SLEEVE SEALS FOR HVAC PIPING

PART 1 - GENERAL

1.1 SUMMARY:

A. Section Includes:

1. Sleeves.
2. Sleeve-seal systems.
3. Grout.

1.2 ACTION SUBMITTALS:

A. Submit the following in accordance with Form 816 Article 1.20-1.05.02 and NOTICE TO CONTRACTOR – SUBMITTALS.

B. Product Data: For each type of product indicated.

PART 2 - PRODUCTS

2.1 SLEEVES:

A. Galvanized-Steel Wall Pipes: ASTM A 53/A 53M, Schedule 40, with plain ends and welded steel collar; zinc coated.

2.2 SLEEVE-SEAL SYSTEMS:

A. Manufacturers: Subject to compliance with requirements, available manufacturers offering products that may be incorporated into the Work include, but are not limited to, the following:

1. CALPICO, Inc.
2. Metraflex Company (The).

B. Description: Modular sealing-element unit, designed for field assembly, for filling annular space between piping and sleeve.

1. Sealing Elements: EPDM-rubber interlocking links shaped to fit surface of pipe. Include type and number required for pipe material and size of pipe.
2. Pressure Plates: Plastic.

3. Connecting Bolts and Nuts: Carbon steel, with corrosion-resistant coating, of length required to secure pressure plates to sealing elements.

2.3 GROUT:

A. Standard: ASTM C 1107/C 1107M, Grade B, post-hardening and volume-adjusting, dry, hydraulic-cement grout.

B. Characteristics: Nonshrink; recommended for interior and exterior applications.

C. Design Mix: 5000-psi, 28-day compressive strength.

D. Packaging: Premixed and factory packaged.

PART 3 - EXECUTION

3.1 SLEEVE INSTALLATION:

A. Install sleeves for piping passing through penetrations in walls.

1. Cut sleeves to length for mounting flush with both surfaces.
2. Using grout, seal the space outside of sleeves in walls.

B. For sleeves that will have sleeve-seal system installed, select sleeves of size large enough to provide minimum 1-inch annular clear space between service piping outer diameter and pipe sleeve inner diameter, or larger as required by sleeve seal manufacturer's instructions.

C. Install sleeves for pipes passing through interior partitions.

1. Cut sleeves to length for mounting flush with both surfaces.
2. Install sleeves that are large enough to provide 1/4-inch annular clear space between sleeve and pipe or pipe insulation.
3. Seal annular space between sleeve and piping or piping insulation; use joint sealants appropriate for size, depth, and location of joint.

3.2 SLEEVE-SEAL-SYSTEM INSTALLATION:

A. Install sleeve-seal systems in sleeves in exterior concrete walls at service piping entries into building.

B. Select type, size, and number of sealing elements required for piping material and size and for sleeve ID or hole size. Position piping in center of sleeve. Center piping in penetration, assemble sleeve-seal system components, and install in annular space

between piping and sleeve. Tighten bolts against pressure plates that cause sealing elements to expand and make a watertight seal.

3.3 SLEEVE AND SLEEVE-SEAL SCHEDULE:

A. Use sleeves and sleeve seals for the following piping-penetration applications:

1. Exterior Concrete Walls above Grade:

a. Piping Smaller Than NPS 6: Galvanized-steel wall sleeves.

END OF SECTION 230517

SECTION 230529 - HANGERS AND SUPPORTS FOR HVAC PIPING AND EQUIPMENT

PART 1 - GENERAL

1.1 SUMMARY:

A. Section Includes:

1. Steel pipe hangers and supports.

1.2 DEFINITIONS:

A. Terminology: As defined in MSS SP-90, “Guidelines on Terminology for Pipe Hangers and Supports,” Manufacturers Standardization Society of The Valve and Fittings Industry Inc.

1.3 PERFORMANCE REQUIREMENTS:

A. Structural Performance: Hangers and supports for HVAC piping and equipment shall withstand the effects of gravity loads and stresses within limits and under conditions indicated according to ASCE/SEI 7.

1.4 ACTION SUBMITTALS:

A. Submit the following in accordance with Form 816 Article 1.20-1.05.02 and NOTICE TO CONTRACTOR – SUBMITTALS.

B. Product Data: For each type of product indicated.

1.5 INFORMATIONAL SUBMITTALS:

A. Quality Assurance Submittals:

1. Welding certificates.

1.6 QUALITY ASSURANCE:

A. Structural Steel Welding Qualifications: Qualify procedures and personnel according to AWS D1.1/D1.1M, "Structural Welding Code - Steel."

PART 2 - PRODUCTS

2.1 STEEL PIPE HANGERS AND SUPPORTS:

A. Description: MSS SP-58, Types 1 through 58, factory-fabricated components.

B. Galvanized Metallic Coatings: Pregalvanized or hot dipped.

C. Hanger Rods: Continuous-thread rod, nuts, and washer made of carbon steel.

PART 3 - EXECUTION

3.1 HANGER AND SUPPORT INSTALLATION:

A. Steel Pipe-Hanger Installation: Comply with MSS SP-69 and MSS SP-89. Install hangers, supports, clamps, and attachments as required to properly support piping from the building structure.

B. Install hangers and supports complete with necessary attachments, inserts, bolts, rods, nuts, washers, and other accessories.

C. Install hangers and supports to allow controlled thermal and seismic movement of piping systems, to permit freedom of movement between pipe anchors, and to facilitate action of expansion joints, expansion loops, expansion bends, and similar units.

D. Install building attachments within concrete slabs or attach to structural steel. Install additional attachments at concentrated loads and at changes in direction of piping.

E. Load Distribution: Install hangers and supports so that piping live and dead loads and stresses from movement will not be transmitted to connected equipment.

F. Pipe Slopes: Install hangers and supports to provide indicated pipe slopes and to not exceed maximum pipe deflections allowed by ASME B31.9 for building services piping.

3.2 ADJUSTING:

A. Hanger Adjustments: Adjust hangers to distribute loads equally on attachments and to achieve indicated slope of pipe.

B. Trim excess length of continuous-thread hanger and support rods to 1-1/2 inches.

3.3 PAINTING:

A. Touchup: Clean and touchup painting of field welds, bolted connections, and abraded areas of shop paint on miscellaneous metal.

B. Galvanized Surfaces: Clean welds, bolted connections, and abraded areas and apply galvanizing-repair paint to comply with ASTM A 780.

3.4 HANGER AND SUPPORT SCHEDULE:

A. Specific hanger and support requirements are in CSI Sections specifying piping systems and equipment.

B. Comply with MSS SP-69 for pipe-hanger selections and applications that are not specified in piping system Sections.

C. Use hangers and supports with galvanized metallic coatings for piping and equipment that will not have field-applied finish.

D. Use carbon-steel pipe hangers and supports and attachments for general service applications.

E. Horizontal-Piping Hangers and Supports: Unless otherwise indicated and except as specified in piping system Sections, install the following types:

1. Adjustable, Steel Clevis Hangers (MSS Type 1): For suspension of noninsulated or insulated, stationary pipes NPS 1/2 to NPS 30.
2. Single-Pipe Rolls (MSS Type 41): For suspension of pipes NPS 1 to NPS 30, from two rods if longitudinal movement caused by expansion and contraction might occur.

F. Vertical-Piping Clamps: Unless otherwise indicated and except as specified in piping system Sections, install the following types:

1. Extension Pipe or Riser Clamps (MSS Type 8): For support of pipe risers NPS 3/4 to NPS 24.
2. Carbon- or Alloy-Steel Riser Clamps (MSS Type 42): For support of pipe risers NPS 3/4 to NPS 24 if longer ends are required for riser clamps.

G. Hanger-Rod Attachments: Unless otherwise indicated and except as specified in piping system Sections, install the following types:

1. Steel Turnbuckles (MSS Type 13): For adjustment up to 6 inches for heavy loads.
2. Steel Clevises (MSS Type 14): For 120 to 450 deg F piping installations.
3. Steel Weldless Eye Nuts (MSS Type 17): For 120 to 450 deg F piping installations.

H. Building Attachments: Unless otherwise indicated and except as specified in piping system Sections, install the following types:

1. Top-Beam C-Clamps (MSS Type 19): For use under roof installations with bar-joist construction, to attach to top flange of structural shape.
2. Center-Beam Clamps (MSS Type 21): For attaching to center of bottom flange of beams.
3. C-Clamps (MSS Type 23): For structural shapes.
4. Welded-Steel Brackets: For support of pipes from below or for suspending from above by using clip and rod. Use one of the following for indicated loads:

    a. Light (MSS Type 31): 750 lb.
    b. Medium (MSS Type 32): 1500 lb.
    c. Heavy (MSS Type 33): 3000 lb.

I. Spring Hangers and Supports: Unless otherwise indicated and except as specified in piping system Sections, install the following types:

1. Restraint-Control Devices (MSS Type 47): Where indicated to control piping movement.
2. Spring Cushions (MSS Type 48): For light loads if vertical movement does not exceed 1-1/4 inches.
3. Spring-Cushion Roll Hangers (MSS Type 49): For equipping Type 41, roll hanger with springs.
4. Spring Sway Braces (MSS Type 50): To retard sway, shock, vibration, or thermal expansion in piping systems.
5. Variable-Spring Hangers (MSS Type 51): Preset to indicated load and limit variability factor to 25 percent to allow expansion and contraction of piping system from hanger.

END OF SECTION 230529

SECTION 230553 - IDENTIFICATION FOR HVAC PIPING AND EQUIPMENT

PART 1 - GENERAL

1.1 SUMMARY:

A. Section Includes:

1. Pipe labels.
2. Valve tags.

1.2 ACTION SUBMITTALS:

A. Submit the following in accordance with Form 816 Article 1.20-1.05.02 and NOTICE TO CONTRACTOR – SUBMITTALS.

B. Product Data: For each type of product indicated.

1.3 QUALITY ASSURANCE:

A. ASME Compliance: Comply with ASME 13.1 “Scheme for the Identification of Piping Systems” for letter size, length of color field, colors, and viewing angles of identification devices for piping.

1.4 COORDINATION:

A. Coordinate installation of identifying devices with completion of covering and painting of surfaces where devices are to be applied.

PART 2 - PRODUCTS

2.1 PIPE LABELS:

A. General Requirements for Manufactured Pipe Labels: Preprinted, color-coded, with lettering indicating service, and showing flow direction.

B. Pretensioned Pipe Labels: Precoiled, semirigid plastic formed to cover full circumference of pipe and to attach to pipe without fasteners or adhesive.

C. Self-Adhesive Pipe Labels: Printed plastic with contact-type, permanent-adhesive backing.

D. Pipe Label Contents: Include identification of piping service using same designations or abbreviations as used on Drawings, pipe size, and an arrow indicating flow direction.

1. Flow-Direction Arrows: Integral with piping system service lettering to accommodate both directions, or as separate unit on each pipe label to indicate flow direction.
2. Lettering Size: At least 1-1/2 inches high.

2.2 VALVE TAGS:

A. Valve Tags: Stamped or engraved with 1/4-inch letters for piping system abbreviation and 1/2-inch numbers.

1. Tag Material: Brass, 0.032-inch minimum thickness, and having predrilled or stamped holes for attachment hardware.
2. Fasteners: Brass wire-link or beaded chain; or S-hook.

PART 3 - EXECUTION

3.1 PREPARATION:

A. Clean piping and equipment surfaces of substances that could impair bond of identification devices, including dirt, oil, grease, release agents, and incompatible primers, paints, and encapsulants.

3.2 PIPE LABEL INSTALLATION:

A. Locate pipe labels where piping is exposed or above accessible ceilings in finished spaces; machine rooms; accessible maintenance spaces such as shafts, tunnels, and plenums; and exterior exposed locations as follows:

1. Near each valve and control device.
2. Near each branch connection, excluding short takeoffs for fixtures and terminal units. Where flow pattern is not obvious, mark each pipe at branch.
3. Near penetrations through walls, floors, ceilings, and inaccessible enclosures.
4. Near major equipment items and other points of origination and termination.
5. Spaced at maximum intervals of 50 feet along each run. Reduce intervals to 25 feet in areas of congested piping and equipment.

B. Pipe Label Color Schedule: In accordance with ASME A13.1.

3.3 VALVE-TAG INSTALLATION:

A. Install tags on valves and control devices in piping systems as directed by the Engineer, except check valves; valves within factory-fabricated equipment units; shutoff valves; faucets; convenience and lawn-watering hose connections; and HVAC terminal devices and similar roughing-in connections of end-use fixtures and units. List tagged valves in a valve schedule.

B. Valve-Tag Application Schedule: Tag valves according to size, shape, and color scheme and with captions similar to those indicated in the following subparagraphs:

1. Valve-Tag Size and Shape: 2 inches, round.
2. Valve-Tag Color: Natural.
3. Letter Color: Black.

END OF SECTION 230553

SECTION 230719 - HVAC PIPING INSULATION

PART 1 - GENERAL

1.1 SUMMARY:

A. Section Includes: HVAC piping insulation systems.

1.2 DEFINITIONS:

A. ASJ: All Service Jacket

B. SSL: Self Sealing Lap

1.3 ACTION SUBMITTALS:

A. Submit the following in accordance with Form 816 Article 1.20-1.05.02 and NOTICE TO CONTRACTOR – SUBMITTALS.

B. Product Data: For each type of product indicated. Include thermal conductivity, water-vapor permeance thickness, and jackets (both factory and field applied if any).

1.4 INFORMATIONAL SUBMITTALS:

A. Quality Assurance Submittals:

1. Manufacturer Certification Letter in accordance with NOTICE TO CONTRACTOR – POTENTIAL FOR ASBESTOS CONTAINING MATERIALS.
2. Material Test Reports: From a qualified testing agency acceptable to authorities having jurisdiction indicating, interpreting, and certifying test results for compliance of insulation materials, sealers, attachments, cements, and jackets, with requirements indicated. Include dates of tests and test methods employed.

1.5 QUALITY ASSURANCE:

A. Source Limitations: Obtain plumbing and HVAC insulation from a single manufacturer in accordance with Form 816 Article 1.20-1.06.01.

B. Surface-Burning Characteristics: For insulation and related materials, as determined by testing identical products according to ASTM E 84, by a testing and inspecting agency acceptable to authorities having jurisdiction. Factory label insulation and jacket

materials and adhesive, mastic, tapes, and cement material containers, with appropriate markings of applicable testing agency.

1. Insulation Installed Indoors: Flame-spread index of 25 or less, and smoke-developed index of 50 or less.

1.6 DELIVERY, STORAGE, AND HANDLING:

A. Packaging: Insulation material containers shall be marked by manufacturer with appropriate ASTM standard designation, type and grade, and maximum use temperature.

1.7 COORDINATION:

A. Coordinate sizes and locations of supports, hangers, and insulation shields specified in CSI Division 23 Section 230529, "Hangers and Supports for HVAC Piping and Equipment."

B. Coordinate clearance requirements with piping Installer for piping insulation application. Before preparing piping Shop Drawings, establish and maintain clearance requirements for installation of insulation and field-applied jackets and finishes and for space required for maintenance.

1.8 SCHEDULING:

A. Schedule insulation application after pressure testing systems and, where required, after installing and testing heat tracing. Insulation application may begin on segments that have satisfactory test results.

B. Complete installation and concealment of plastic materials as rapidly as possible in each area of construction.

PART 2 - PRODUCTS

2.1 INSULATION MATERIALS:

A. Comply with requirements in Part 3 for where insulating materials shall be applied.

B. Products shall not contain asbestos, lead, mercury, or mercury compounds.

C. Products that come in contact with stainless steel shall have a leachable chloride content of less than 50 ppm when tested according to ASTM C 871.

D. Insulation materials for use on austenitic stainless steel shall be qualified as acceptable according to ASTM C 795.

E. Foam insulation materials shall not use CFC or HCFC blowing agents in the manufacturing process.

F. Mineral-Fiber, Preformed Pipe Insulation:

1. Products: Subject to compliance with requirements, available products that may be incorporated into the Work include, but are not limited to, the following:

a. Johns Manville; Micro-Lok.
b. Knauf Insulation; 1000-Degree Pipe Insulation.
c. Manson Insulation Inc.; Alley-K.
d. Owens Corning; Fiberglas Pipe Insulation.

2. Type I, 850 deg F Materials: Mineral or glass fibers bonded with a thermosetting resin. Comply with ASTM C 547, Type I, Grade A, with factory-applied ASJ-SSL. Factory-applied jacket requirements are specified in "Factory-Applied Jackets" Article.

2.2 ADHESIVES:

A. Materials shall be compatible with insulation materials, jackets, and substrates and for bonding insulation to itself and to surfaces to be insulated unless otherwise indicated.

B. Mineral-Fiber Adhesive: Comply with MIL-A-3316C, Class 2, Grade A.

1. Products: Subject to compliance with requirements, available products that may be incorporated into the Work include, but are not limited to, the following:

a. Childers Brand, Specialty Construction Brands, Inc., a business of H. B. Fuller Company; CP-127.
b. Eagle Bridges - Marathon Industries; 225.
c. Foster Brand, Specialty Construction Brands, Inc., a business of H. B. Fuller Company; 85-60/85-70.
d. Mon-Eco Industries, Inc.; 22-25.

C. ASJ Adhesive: Comply with MIL-A-3316C, Class 2, Grade A for bonding insulation jacket lap seams and joints.

1. Products: Subject to compliance with requirements, available products that may be incorporated into the Work include, but are not limited to, the following:

a. Childers Brand, Specialty Construction Brands, Inc., a business of H. B. Fuller Company; CP-82.
b. Eagle Bridges - Marathon Industries; 225.

c. Foster Brand, Specialty Construction Brands, Inc., a business of H. B. Fuller Company; 85-50.
d. Mon-Eco Industries, Inc.; 22-25.

2.3 MASTICS:

A. Materials shall be compatible with insulation materials, jackets, and substrates; comply with MIL-PRF-19565C, Type II.

B. Vapor-Barrier Mastic: Water based; suitable for indoor use on below-ambient services.

1. Products: Subject to compliance with requirements, available products that may be incorporated into the Work include, but are not limited to, the following:

a. Foster Brand, Specialty Construction Brands, Inc., a business of H. B. Fuller Company; 30-80/30-90.
b. Vimasco Corporation; 749.

2. Water-Vapor Permeance: ASTM E 96/E 96M, Procedure B, 0.013 perm at 43-mil dry film thickness.
3. Service Temperature Range: Minus 20 to plus 180 deg F.
4. Solids Content: ASTM D 1644, 58 percent by volume and 70 percent by weight.
5. Color: White.

2.4 SEALANTS:

A. Joint Sealants:

1. Materials shall be compatible with insulation materials, jackets, and substrates.
2. Permanently flexible, elastomeric sealant.
3. Service Temperature Range: Minus 100 to plus 300 deg F.
4. Color: White or gray.

B. ASJ Flashing Sealants:

1. Products: Subject to compliance with requirements, available products that may be incorporated into the Work include, but are not limited to, the following:

a. Childers Brand, Specialty Construction Brands, Inc., a business of H. B. Fuller Company; CP-76.

2. Materials shall be compatible with insulation materials, jackets, and substrates.
3. Fire- and water-resistant, flexible, elastomeric sealant.
4. Service Temperature Range: Minus 40 to plus 250 deg F.
5. Color: White.

2.5 FACTORY-APPLIED JACKETS:

A. Insulation system schedules indicate factory-applied jackets on various applications. When factory-applied jackets are indicated, comply with the following:

1. ASJ-SSL: ASJ with self-sealing, pressure-sensitive, acrylic-based adhesive covered by a removable protective strip; complying with ASTM C 1136, Type I.

2.6 FIELD-APPLIED JACKETS:

A. Field-applied jackets shall comply with ASTM C 921, Type I, unless otherwise indicated.

2.7 TAPES:

A. ASJ Tape: White vapor-retarder tape matching factory-applied jacket with acrylic adhesive, complying with ASTM C 1136.

1. Products: Subject to compliance with requirements, available products that may be incorporated into the Work include, but are not limited to, the following:

a. ABI, Ideal Tape Division; 428 AWF ASJ.
b. Avery Dennison Corporation, Specialty Tapes Division; Fasson 0836.
c. Compac Corporation; 104 and 105.
d. Venture Tape; 1540 CW Plus, 1542 CW Plus, and 1542 CW Plus/SQ.

2. Width: 3 inches.
3. Thickness: 11.5 mils.
4. Adhesion: 90 ounces force/inch in width.
5. Elongation: 2 percent.
6. Tensile Strength: 40 lbf/inch in width.
7. ASJ Tape Disks and Squares: Precut disks or squares of ASJ tape.

2.8 SECUREMENTS:

A. Bands:

1. Products: Subject to compliance with requirements, available products that may be incorporated into the Work include, but are not limited to, the following:

a. ITW Insulation Systems; Gerrard Strapping and Seals.
b. RPR Products, Inc.; Insul-Mate Strapping, Seals, and Springs.

2. Stainless Steel: ASTM A 167 or ASTM A 240/A 240M, Type 304 or Type 316; 0.015 inch thick, 1/2 inch wide with wing seal.

3. Aluminum: ASTM B 209, Alloy 3003, 3005, 3105, or 5005; Temper H-14, 0.020 inch thick, 1/2 inch wide with wing seal.

B. Staples: Outward-clinching insulation staples, nominal 3/4-inch- wide, stainless steel or Monel.

C. Wire: 0.062-inch soft-annealed, stainless steel.

1. Manufacturers: Subject to compliance with requirements, available manufacturers offering products that may be incorporated into the Work include, but are not limited to, the following:

a. C & F Wire.

PART 3 - EXECUTION

3.1 EXAMINATION:

A. Examine substrates and conditions for compliance with requirements for installation tolerances and other conditions affecting performance of insulation application.

1. Verify that systems to be insulated have been tested and are free of defects.
2. Verify that surfaces to be insulated are clean and dry.
3. Proceed with installation only after unsatisfactory conditions have been corrected.

3.2 PREPARATION:

A. Surface Preparation: Clean and prepare surfaces to be insulated. Before insulating, apply a corrosion coating to insulated surfaces as follows:

1. Carbon Steel: Coat carbon steel operating at a service temperature between 32 and 300 deg F with an epoxy coating. Consult coating manufacturer for appropriate coating materials and application methods for operating temperature range.

3.3 GENERAL INSTALLATION REQUIREMENTS:

A. Install insulation materials, accessories, and finishes with smooth, straight, and even surfaces; free of voids throughout the length of piping including fittings, valves, and specialties.

B. Install insulation materials, forms, vapor barriers or retarders, jackets, and thicknesses required for each item of pipe system as specified in insulation system schedules.

C. Install accessories compatible with insulation materials and suitable for the service. Install accessories that do not corrode, soften, or otherwise attack insulation or jacket in either wet or dry state.

D. Install insulation with longitudinal seams at top and bottom of horizontal runs.

E. Install multiple layers of insulation with longitudinal and end seams staggered.

F. Do not weld brackets, clips, or other attachment devices to piping, fittings, and specialties.

G. Keep insulation materials dry during application and finishing.

H. Install insulation with tight longitudinal seams and end joints. Bond seams and joints with adhesive recommended by insulation material manufacturer.

I. Install insulation with least number of joints practical.

J. Where vapor barrier is indicated, seal joints, seams, and penetrations in insulation at hangers, supports, anchors, and other projections with vapor-barrier mastic.

1. Install insulation continuously through hangers and around anchor attachments.
2. For insulation application where vapor barriers are indicated, extend insulation on anchor legs from point of attachment to supported item to point of attachment to structure. Taper and seal ends at attachment to structure with vapor-barrier mastic.
3. Install insert materials and install insulation to tightly join the insert. Seal insulation to insulation inserts with adhesive or sealing compound recommended by insulation material manufacturer.
4. Cover inserts with jacket material matching adjacent pipe insulation. Install shields over jacket, arranged to protect jacket from tear or puncture by hanger, support, and shield.

K. Apply adhesives, mastics, and sealants at manufacturer's recommended coverage rate and wet and dry film thicknesses.

L. Install insulation with factory-applied jackets as follows:

1. Draw jacket tight and smooth.
2. Cover circumferential joints with 3-inch- wide strips, of same material as insulation jacket. Secure strips with adhesive and outward clinching staples along both edges of strip, spaced 4 inches o.c.
3. Overlap jacket longitudinal seams at least 1-1/2 inches. Install insulation with longitudinal seams at bottom of pipe. Clean and dry surface to receive self-sealing lap. Staple laps with outward clinching staples along edge at 4 inches o.c.

    a. For below-ambient services, apply vapor-barrier mastic over staples.

4. Cover joints and seams with tape, according to insulation material manufacturer's written instructions, to maintain vapor seal.
5. Where vapor barriers are indicated, apply vapor-barrier mastic on seams and joints and at ends adjacent to pipe flanges and fittings.

M. Cut insulation in a manner to avoid compressing insulation more than 75 percent of its nominal thickness.

N. Finish installation with systems at operating conditions. Repair joint separations and cracking due to thermal movement.

O. Repair damaged insulation facings by applying same facing material over damaged areas. Extend patches at least 4 inches beyond damaged areas. Adhere, staple, and seal patches similar to butt joints.

P. For above-ambient services, do not install insulation to the following:

1. Vibration-control devices.
2. Testing agency labels and stamps.
3. Nameplates and data plates.
4. Manholes.
5. Handholes.
6. Cleanouts.

3.4 GENERAL PIPE INSULATION INSTALLATION:

A. Requirements in this article generally apply to all insulation materials except where more specific requirements are specified elsewhere in this Section.

B. Insulation Installation on Fittings, Valves, Flanges, and Unions:

1. Install insulation over fittings, valves, strainers, flanges, unions, and other specialties with continuous thermal and vapor-retarder integrity unless otherwise indicated.
2. Insulate pipe elbows using preformed fitting insulation or mitered fittings made from same material and density as adjacent pipe insulation. Each piece shall be butted tightly against adjoining piece and bonded with adhesive. Fill joints, seams, voids, and irregular surfaces with insulating cement finished to a smooth, hard, and uniform contour that is uniform with adjoining pipe insulation.
3. Insulate tee fittings with preformed fitting insulation or sectional pipe insulation of same material and thickness as used for adjacent pipe. Cut sectional pipe insulation to fit. Butt each section closely to the next and hold in place with tie wire. Bond pieces with adhesive.
4. Insulate valves using preformed fitting insulation or sectional pipe insulation of same material, density, and thickness as used for adjacent pipe. Overlap adjoining pipe insulation by not less than two times the thickness of pipe insulation, or one pipe diameter, whichever is thicker. For valves, insulate up to

and including the bonnets, valve stuffing-box studs, bolts, and nuts. Fill joints, seams, and irregular surfaces with insulating cement.

5. Insulate flanges and unions using a section of oversized preformed pipe insulation. Overlap adjoining pipe insulation by not less than two times the thickness of pipe insulation, or one pipe diameter, whichever is thicker.
6. Stencil or label the outside insulation jacket of each union with the word "union." Match size and color of pipe labels.

C. Insulate instrument connections for thermometers, pressure gages, pressure temperature taps, test connections, flow meters, sensors, switches, and transmitters on insulated pipes. Shape insulation at these connections by tapering it to and around the connection with insulating cement and finish with finishing cement, mastic, and flashing sealant.

3.5 INSTALLATION OF MINERAL-FIBER INSULATION:

A. Insulation Installation on Straight Pipes and Tubes:

1. Secure each layer of preformed pipe insulation to pipe with wire or bands and tighten bands without deforming insulation materials.
2. Where vapor barriers are indicated, seal longitudinal seams, end joints, and protrusions with vapor-barrier mastic and joint sealant.
3. For insulation with factory-applied jackets on above-ambient surfaces, secure laps with outward-clinched staples at 6 inches o.c.
4. For insulation with factory-applied jackets on below-ambient surfaces, do not staple longitudinal tabs. Instead, secure tabs with additional adhesive as recommended by insulation material manufacturer and seal with vapor-barrier mastic and flashing sealant.

B. Insulation Installation on Pipe Flanges:

1. Install preformed pipe insulation to outer diameter of pipe flange.
2. Make width of insulation section same as overall width of flange and bolts, plus twice the thickness of pipe insulation.
3. Fill voids between inner circumference of flange insulation and outer circumference of adjacent straight pipe segments with mineral-fiber blanket insulation.
4. Install jacket material with manufacturer's recommended adhesive, overlap seams at least 1 inch, and seal joints with flashing sealant.

C. Insulation Installation on Pipe Fittings and Elbows:

1. Install preformed sections of same material as straight segments of pipe insulation when available.
2. When preformed insulation elbows and fittings are not available, install mitered sections of pipe insulation, to a thickness equal to adjoining pipe insulation. Secure insulation materials with wire or bands.

D. Insulation Installation on Valves and Pipe Specialties:

1. Install preformed sections of same material as straight segments of pipe insulation when available.
2. When preformed sections are not available, install mitered sections of pipe insulation to valve body.
3. Arrange insulation to permit access to packing and to allow valve operation without disturbing insulation.
4. Install insulation to flanges as specified for flange insulation application.

3.6 PIPING INSULATION SCHEDULE, GENERAL:

A. Acceptable preformed pipe and tubular insulation materials and thicknesses are identified for each piping system and pipe size range. If more than one material is listed for a piping system, selection from materials listed is Contractor's option.

3.7 INDOOR PIPING INSULATION SCHEDULE:

A. Heating-Hot-Water Supply and Return, 200 Deg F and Below:

1. NPS 1-1/2 and Smaller: Insulation shall be the following:

a. Mineral-Fiber, Preformed Pipe, Type I: 1-1/2 inch thick.

2. NPS 2 and Larger: Insulation shall be the following:

a. Mineral-Fiber, Preformed Pipe, Type I: 2 inches thick.

END OF SECTION 230719

SECTION 230900 - INSTRUMENTATION AND CONTROL FOR HVAC

PART 1 - GENERAL

1.1 SUMMARY:

A. This Section includes control equipment for HVAC systems and components connecting to the existing BAS/ATC System at the Glastonbury Maintenance Facility.

B. Related Sections include the following:

1. Division 23 Section 230993, "Sequence of Operations for HVAC Controls" for requirements that relate to this Section.

1.2 DEFINITIONS:

A. ATC: Automatic Temperature Controls.

B. BAS: Building Automation System.

1.3 ACTION SUBMITTALS:

A. Submit the following in accordance with Form 816 Article 1.20-1.05.02 and NOTICE TO CONTRACTOR – SUBMITTALS.

B. Product Data: For each type of product indicated.

1.4 QUALITY ASSURANCE:

A. Conduct a Pre-Installation Meeting at the Project Site in compliance with the requirements of Form 816 Article 1.20-1.05.24 subsection 2.

1. The BAS/ATC Installer shall meet with the Electrical Installer before any wiring is started to ensure that all required circuits are provided, and shall meet with the HVAC Installer and any other required installers to coordinate the Work.

PART 2 - PRODUCTS

2.1 MANUFACTURERS:

A. The HVAC Control Systems are required to interface with the existing BAS/ATC system as manufactured by Trane. The Contractor shall coordinate with Trane as

necessary for connection of controls to maintain existing sequences of operation as well as additional sequences as specified. “Or Equal” manufacturer’s will not be permitted.

1. Contact Information:

   Alan Berard – Trane CT DOT Direct Account Manager
   Phone: 860-616-6514
   Email: apberard@trane.com

2.2 STATUS SENSORS:

A. Current Switches: Self-powered, solid-state with adjustable trip current, selected to match current and system output requirements, Model No. H-708, as manufactured by Hawkeye, or an approved equal.

B. Electronic Valve/Damper Position Indicator: Visual scale indicating percent of travel and 2- to 10-V dc, feedback signal.

2.3 ACTUATORS:

A. Electronic Actuators: Direct-coupled type designed for minimum 60,000 full-stroke cycles at rated torque.

1. Dampers: Size for running torque calculated as follows:

   a. Parallel-Blade Damper with Edge Seals: 7 inch-lb/sq. ft. of damper.
   b. Opposed-Blade Damper with Edge Seals: 5 inch-lb/sq. ft. of damper.

2. Coupling: V-bolt and V-shaped, toothed cradle.
3. Overload Protection: Electronic overload or digital rotation-sensing circuitry.
4. Fail-Safe Operation: Mechanical, spring-return mechanism.
5. Power Requirements: 24-V ac.
6. Electronic Damper Position Indicator: Visual scale indicating percent of travel and 2- to 10-V dc, feedback signal
7. Auxiliary switch: Built-in, UL-listed, SPDT

2.4 RELAYS:

A. Control relays shall be UL listed plug-in type with dust cover or totally enclosed with condulet fitting. Contact rating, configuration, and coil voltage suitable for application.

B. Time delay relays shall be UL listed solid-state plug-in type with adjustable time delay. Delay shall be adjustable plus or minus 200% (minimum) from setpoint required by the sequence of operation. Contact rating, configuration, and coil voltage suitable for application. Provide NEMA Type 1 enclosure when not installed in local control panel.

PART 3 - EXECUTION

3.1 INSTALLATION:

A. Actuators (Valves and Dampers): Install in accordance with manufacturer's instructions along with the following:

1. Actuators shall be mounted on valves with adapters approved by the actuator manufacturer.
2. To compress seals when spring return actuators are used on normally closed dampers, power actuator to approximately 5 degrees open position, manually close the damper, and then tighten the linkage.
3. Check operation of damper/actuator combination to confirm that actuator modulates damper smoothly throughout stroke to both open and closed positions.

B. Control and status relays are to be located in designated enclosures only. These relays may also be located within packaged equipment control panel enclosures. These relays shall not be located within Class 1 starter enclosures.

C. Connect auto/override selector switches to override automatic interlock controls when switch is in hand position.

3.2 FIELD QUALITY CONTROL:

A. Connection to the existing BAS/ATC System will not be accepted until an acceptance test is performed in the presence of the Engineer and the Owner to ensure proper operation, and until the outcome is acceptable to the Engineer and the Owner.

END OF SECTION 230900

SECTION 230993 - SEQUENCE OF OPERATIONS FOR HVAC CONTROLS

PART 1 - GENERAL

1.1 SUMMARY:

A. This Section includes control sequences for HVAC systems and components at the Glastonbury Maintenance Facility.

B. Related CSI Sections include the following:

1. Division 23 Section 230900, "Instrumentation and Control for HVAC" for control equipment and devices and for submittal requirements.

1.2 DEFINITIONS:

A. BCU: Building Control Unit.

B. TSGUI: Trane Tracer Summit Graphical User Interface.

1.3 SYSTEM CONTROL:

A. The system as installed must be capable of interface with the existing building TSGUI.

1.4 HEATING CONTROL SEQUENCES:

A. Hydronic Supply Temperature Control: The existing boiler controller shall enable the lead boiler when hot water is required by any building system for heat. Once enabled, the boiler shall operate on its own self-contained controls until the hot water supply temperature achieves the desired setpoint, based on the reset schedule. At this point, the existing boiler controller shall disable the boiler until the water temperature drops 5° below setpoint, at which time the boiler shall be re-enabled. The existing boiler controller shall rotate the boilers on a weekly basis to maintain equal run-time, and shall monitor the operational status of the boilers and pass their status to the existing BCU. If either boiler is manually overridden at the boiler by the local 2-position auto/override switch (installed by the BAS/ATC Installer), an alarm will be generated at the existing BCU.

1. Reset Schedule (Adjustable): Control hydronic supply temperature in straight-line relationship to outdoor temperature for the following conditions:

a. 200°F water temperature when outdoor air temperature is 0°F.
b. 140°F water temperature when outdoor air temperature is 60°F.

B. If either boiler fails to operate as sensed by the water supply immersion sensor or by boiler lockout, the existing boiler controller shall message existing workstations and pagers.

C. Existing Points List:

1. Outdoor Air Temperature.
2. Water Supply Temperature.
3. Water Return Temperature.
4. Boiler 1 Enable/Disable.
5. Boiler 2 Enable/Disable.
6. Boiler 1 Status.
7. Boiler 2 Status.
8. Boiler 1 Override Status Switch.
9. Boiler 2 Override Status Switch.

D. Additional Points List:

1. Combustion Air Louver 1 Position Status.
2. Combustion Air Louver 2 Position Status.

1.5 MISCELLANEOUS EQUIPMENT SEQUENCES:

A. Water Heater: Enable in the occupied mode and disable in the unoccupied mode. Once enabled, the water heater shall operate on its own self-contained controls until the water temperature achieves the desired temperature.

1. Points List:

a. Water Heater Enable/Disable/Status.
b. Domestic Hot Water Temperature.

PART 2 - PRODUCTS (Not Applicable)

PART 3 - EXECUTION (Not Applicable)

END OF SECTION 230993

SECTION 231123 - FACILITY NATURAL-GAS PIPING

PART 1 - GENERAL

1.1 SUMMARY:

A. Section Includes:

1. Pipes, tubes, and fittings.
2. Piping specialties.
3. Piping and tubing joining materials.
4. Valves.
5. Pressure regulators.

1.2 PERFORMANCE REQUIREMENTS:

A. Minimum Operating-Pressure Ratings:

1. Piping and Valves: 100 psig minimum unless otherwise indicated.

1.3 ACTION SUBMITTALS:

A. Submit the following in accordance with Form 816 Article 1.20-1.05.02 and NOTICE TO CONTRACTOR – SUBMITTALS.

B. Product Data: For each type of the following:

1. Pipes, tubes, fittings.
2. Piping specialties.
3. Piping and tubing joining materials.
4. Valves. Include pressure rating, capacity, settings, and electrical connection data of selected models.
5. Pressure regulators. Indicate pressure ratings and capacities.
6. Spare Parts: Include name, address, and telephone number of in-state supplier of spare parts. No out-of-state suppliers shall be permitted.

1.4 INFORMATIONAL SUBMITTALS:

A. Quality Assurance Submittals:

1. Field quality-control reports.

1.5 CLOSEOUT SUBMITTALS:

A. Operation and Maintenance Data: For pressure regulators to include in the operation and maintenance manuals specified in Form 816 Article 1.20-1.08.14 subsection 2 and described in NOTICE TO CONTRACTOR – CLOSEOUT DOCUMENTS.

1.6 QUALITY ASSURANCE:

1.7 DELIVERY, STORAGE, AND HANDLING:

A. Deliver pipes and tubes with factory-applied end caps. Maintain end caps through shipping, storage, and handling to prevent pipe end damage and to prevent entrance of dirt, debris, and moisture.

1.8 COORDINATION:

A. Coordinate natural-gas connections to components furnished by utility companies.

B. Natural-Gas Service: Natural-gas service to the building as well as the meter set shall be furnished and installed by Connecticut Natural Gas (CNG). If it is determined that a utility charge applies, the Contractor's bid will be adjusted to reflect the charge by construction order, provided that the Contractor provides all applicable written billing documentation. The Contractor will be compensated only for the billed amount. No additional Contractor markup will be allowed.

1. The Contractor shall coordinate the scheduling of work to be performed by CNG. The Contractor is advised that CNG requires a minimum of 8 weeks to complete its design work before they can commence their construction activities.
2. If necessary, the utility charge shall be sent with a note referencing this project by project number and street address (235 Oak Street, Glastonbury, CT) to:

   Mr. George Sfridis
   Connecticut Natural Gas Corp
   76 Meadow Street
   East Hartford, CT 06108

PART 2 - PRODUCTS

2.1 PIPES, TUBES, AND FITTINGS:

A. Steel Pipe: ASTM A 53/A 53M, black steel, Schedule 40, Type E or S, Grade B.

1. Malleable-Iron Threaded Fittings: ASME B16.3, Class 150, standard pattern.

2. Unions: ASME B16.39, Class 150, malleable iron with brass-to-iron seat, ground joint, and threaded ends.

2.2 PIPING SPECIALTIES:

A. Appliance Flexible Connectors:

1. Indoor, Fixed-Appliance Flexible Connectors: Comply with ANSI Z21.24.
2. Corrugated stainless-steel tubing with polymer coating.
3. Operating-Pressure Rating: 0.5 psig.
4. End Fittings: Zinc-coated steel.
5. Threaded Ends: Comply with ASME B1.20.1.
6. Maximum Length: 72 inches.

B. Quick-Disconnect Devices: Comply with ANSI Z21.41.

1. Copper-alloy convenience outlet and matching plug connector.
2. Nitrile seals.
3. Hand operated with automatic shutoff when disconnected.
4. For indoor or outdoor applications.
5. Adjustable, retractable restraining cable.

C. Y-Pattern Strainers:

1. Body: ASTM A 126, Class B, cast iron with bolted cover and bottom drain connection.
2. End Connections: Threaded.
3. Strainer Screen: 40 or 60-mesh startup strainer, and perforated stainless-steel basket with 50 percent free area.
4. CWP Rating: 125 psig.

D. Weatherproof Vent Cap: Cast- or malleable-iron increaser fitting with corrosion-resistant wire screen, with free area at least equal to cross-sectional area of connecting pipe and threaded-end connection.

2.3 JOINING MATERIALS:

A. Joint Compound and Tape: Suitable for natural gas.

2.4 MANUAL GAS SHUTOFF VALVES:

A. See Part 3.13 "Aboveground Manual Gas Shutoff Valve Schedule" for where each valve type is applied in various services.

B. General Requirements for Metallic Valves, NPS 2 and Smaller: Comply with ASME B16.33.

1. CWP Rating: 125 psig.
2. Threaded Ends: Comply with ASME B1.20.1.
3. Listing: Listed and labeled by an NRTL acceptable to authorities having jurisdiction for valves 1 inch and smaller.
4. Service Mark: Valves 1-1/4 inches to NPS 2 shall have initials "WOG" permanently marked on valve body.

C. General Requirements for Metallic Valves, NPS 2-1/2 and Larger: Comply with ASME B16.38.

1. CWP Rating: 125 psig.
2. Flanged Ends: Comply with ASME B16.5 for steel flanges.
3. Service Mark: Initials "WOG" shall be permanently marked on valve body.

D. Two-Piece, Full-Port, Bronze Ball Valves with Brass Trim: MSS SP-110.

1. Manufacturers: Subject to compliance with requirements, available manufacturers offering products that may be incorporated into the Work include, but are not limited to, the following:

   a. NIBCO, Inc.
   b. Conbraco Industries, Inc.; Apollo Div.
   c. Milwaukee Valve Company.

2. Body: Brass or bronze, complying with ASTM B 584.
3. Ball: Chrome-plated brass or bronze.
4. Stem: Brass or bronze; blowout proof.
5. Seats: Reinforced TFE; blowout proof.
6. Packing: Threaded-body packnut design with adjustable-stem packing.
7. Ends: Threaded or socket as indicated in Part 3.13 "Aboveground Manual Gas Shutoff Valve Schedule."
8. CWP Rating: 600 psig.
9. Listing: Valves NPS 1 and smaller shall be listed and labeled by an NRTL acceptable to authorities having jurisdiction.
10. Service: Suitable for natural-gas service with "WOG" indicated on valve body.

2.5 PRESSURE REGULATORS:

A. General Requirements:

1. Single stage and suitable for natural gas.
2. Steel jacket and corrosion-resistant components.
3. Elevation compensator.
4. End Connections: Threaded for regulators NPS 2 and smaller; flanged for regulators NPS 2-1/2 and larger.

B. Line Pressure Regulators: Comply with ANSI Z21.80.

1. Manufacturers: Subject to compliance with requirements, available manufacturers offering products that may be incorporated into the Work include, but are not limited to, the following:

    a. Actaris.
    b. American Meter Company.
    c. Eclipse Combustion, Inc.
    d. Fisher Control Valves and Regulators; Division of Emerson Process Management.
    e. Invensys.
    f. Maxitrol Company.
    g. Richards Industries; Jordan Valve Div.

2. Body and Diaphragm Case: Cast iron or die-cast aluminum.
3. Springs: Zinc-plated steel; interchangeable.
4. Diaphragm Plate: Zinc-plated steel.
5. Seat Disc: Nitrile rubber resistant to gas impurities, abrasion, and deformation at the valve port.
6. Orifice: Aluminum; interchangeable.
7. Seal Plug: Ultraviolet-stabilized, mineral-filled nylon.
8. Single-port, self-contained regulator with orifice no larger than required at maximum pressure inlet, and no pressure sensing piping external to the regulator.
9. Pressure regulator shall maintain discharge pressure setting downstream, and not exceed 150 percent of design discharge pressure at shutoff.
10. Overpressure Protection Device: Factory mounted on pressure regulator.
11. Atmospheric Vent: Factory- or field-installed, stainless-steel screen in opening if not connected to vent piping.
12. Maximum Inlet Pressure: 2 psig.

C. Appliance Pressure Regulators: Comply with ANSI Z21.18.

1. Manufacturers: Subject to compliance with requirements, available manufacturers offering products that may be incorporated into the Work include, but are not limited to, the following:

    a. Canadian Meter Company Inc.
    b. Eaton Corporation; Controls Div.
    c. Harper Wyman Co.
    d. Maxitrol Company.
    e. SCP, Inc.

2. Body and Diaphragm Case: Die-cast aluminum.
3. Springs: Zinc-plated steel; interchangeable.
4. Diaphragm Plate: Zinc-plated steel.
5. Seat Disc: Nitrile rubber.
6. Seal Plug: Ultraviolet-stabilized, mineral-filled nylon.

7. Factory-Applied Finish: Minimum three-layer polyester and polyurethane paint finish.
8. Regulator may include vent limiting device, instead of vent connection, if approved by authorities having jurisdiction.
9. Maximum Inlet Pressure: 2 psig.

PART 3 - EXECUTION

3.1 EXAMINATION:

A. Examine roughing-in for natural-gas piping system to verify actual locations of piping connections before equipment installation.

B. Proceed with installation only after unsatisfactory conditions have been corrected.

3.2 OUTDOOR PIPING INSTALLATION:

A. Comply with NFPA 54 and the Connecticut Gas Equipment and Piping Code for installation and purging of natural-gas piping.

B. Install fittings for changes in direction and branch connections.

C. Install sleeves and sleeve seals for piping penetrations of exterior walls. Comply with requirements for sleeve seals specified in Division 23 Section 230517, "Sleeves and Sleeve Seals for HVAC Piping."

3.3 INDOOR PIPING INSTALLATION:

A. Comply with NFPA 54 and the Connecticut Gas Equipment and Piping Code for installation and purging of natural-gas piping.

B. Plans, schematics, and diagrams indicate general location and arrangement of piping systems. Indicated locations and arrangements are used to size pipe and calculate friction loss, expansion, and other design considerations. Install piping as indicated unless deviations to layout are approved on Coordination Drawings.

C. Install piping indicated to be exposed and piping in equipment rooms and service areas at right angles or parallel to building walls. Diagonal runs are prohibited unless specifically indicated otherwise.

D. Locate valves for easy access.

E. Install natural-gas piping at uniform grade of 2 percent down toward drip and sediment traps.

F. Install piping free of sags and bends.

G. Install fittings for changes in direction and branch connections.

H. Verify final equipment locations for roughing-in.

I. Install appliance regulators on inlet piping to each natural gas fired equipment burner.

J. Comply with requirements in Sections specifying gas-fired appliances and equipment for roughing-in requirements.

K. Drips and Sediment Traps: Install drips at points where condensate may collect, including service-meter outlets. Locate where accessible to permit cleaning and emptying. Do not install where condensate is subject to freezing.

1. Construct drips and sediment traps using tee fitting with bottom outlet plugged or capped. Use nipple a minimum length of 3 pipe diameters, but not less than 3 inches long and same size as connected pipe. Install with space below bottom of drip to remove plug or cap.

L. Extend relief vent connections for line regulators and overpressure protection devices to outdoors and terminate with weatherproof vent cap.

M. Prohibited Locations:

1. Do not install natural-gas piping in or through circulating air ducts, chimneys or gas vents (flues), or ventilating ducts.
2. Do not install natural-gas piping in solid walls or partitions.

N. Use eccentric reducer fittings to make reductions in pipe sizes. Install fittings with level side down.

O. Connect branch piping from top or side of horizontal piping.

P. Install unions in pipes NPS 2 and smaller, adjacent to each valve, at final connection to each piece of equipment. Unions are not required at flanged connections.

Q. Do not use natural-gas piping as grounding electrode.

R. Install strainer on inlet of each line-pressure regulator.

3.4 VALVE INSTALLATION:

A. Install manual gas shutoff valve for each gas appliance ahead of corrugated stainless-steel tubing, aluminum, or copper connector.

B. Install regulators and overpressure protection devices with maintenance access space adequate for servicing and testing.

3.5 PIPING JOINT CONSTRUCTION:

A. Ream ends of pipes and tubes and remove burrs.

B. Remove scale, slag, dirt, and debris from inside and outside of pipe and fittings before assembly.

C. Threaded Joints:

1. Thread pipe with tapered pipe threads complying with ASME B1.20.1.
2. Cut threads full and clean using sharp dies.
3. Ream threaded pipe ends to remove burrs and restore full inside diameter of pipe.
4. Apply appropriate tape or thread compound to external pipe threads unless dryseal threading is specified.
5. Damaged Threads: Do not use pipe or pipe fittings with threads that are corroded or damaged. Do not use pipe sections that have cracked or open welds.

3.6 HANGER AND SUPPORT INSTALLATION:

A. Comply with requirements for pipe hangers and supports specified in CSI Division 23 Section 230529, "Hangers and Supports for HVAC Piping and Equipment."

B. Install hangers for horizontal steel piping with the following maximum spacing and minimum rod sizes:

1. NPS 1 and Smaller: Maximum span, 96 inches; minimum rod size, 3/8 inch.
2. NPS 1-1/4: Maximum span, 108 inches; minimum rod size, 3/8 inch.
3. NPS 1-1/2 and NPS 2: Maximum span, 108 inches; minimum rod size, 3/8 inch.

3.7 CONNECTIONS:

A. Install piping adjacent to appliances to allow service and maintenance of appliances.

B. Connect piping to appliances using manual gas shutoff valves and unions. Install valve within 72 inches of each gas-fired appliance and equipment. Install union between valve and appliances or equipment.

C. Sediment Traps: Install tee fitting with capped nipple in bottom to form drip, as close as practical to inlet of each appliance.

3.8 LABELING AND IDENTIFYING:

A. Comply with requirements in CSI Division 23 Section 230553, "Identification for HVAC Piping and Equipment" for piping and valve identification.

3.9 PAINTING:

A. Paint exposed, exterior metal piping, valves, and piping specialties, except components, with factory-applied paint or protective coating.

1. Alkyd System: MPI EXT 5.1D.

a. Prime Coat: Alkyd anticorrosive metal primer.
b. Intermediate Coat: Exterior alkyd enamel matching topcoat.
c. Topcoat: Exterior alkyd enamel semigloss.
d. Color: Gray.

B. Paint exposed, interior metal piping, valves, and piping specialties, except components, with factory-applied paint or protective coating.

1. Alkyd System: MPI INT 5.1E.

a. Prime Coat: Quick-drying alkyd metal primer (MPI #79).
b. Intermediate Coat: Latex, interior, matching topcoat.
c. Topcoat: Latex, interior, semigloss (MPI #54).
d. Color: Gray.

C. Damage and Touchup: Repair marred and damaged factory-applied finishes with materials and by procedures to match original factory finish.

3.10 FIELD QUALITY CONTROL:

A. Perform tests and inspections.

B. Tests and Inspections:

1. Test, inspect, and purge natural gas according to NFPA 54 and the Connecticut Gas Equipment and Piping Code and authorities having jurisdiction.

C. Natural-gas piping will be considered defective if it does not pass tests and inspections.

D. Prepare test and inspection reports.

3.11 OUTDOOR PIPING SCHEDULE:

A. Aboveground natural-gas piping shall be one of the following:

1. NPS 2 and Smaller: Steel pipe with malleable-iron fittings and threaded joints.

3.12 INDOOR PIPING SCHEDULE:

A. Aboveground, natural-gas piping shall be one of the following:

1. NPS 2 and Smaller: Steel pipe with malleable-iron fittings and threaded joints.

3.13 ABOVEGROUND MANUAL GAS SHUTOFF VALVE SCHEDULE:

A. Two-piece, full-port, bronze ball valves with bronze trim.

END OF SECTION 231123

SECTION 232113 - HYDRONIC PIPING

PART 1 - GENERAL

1.1 SUMMARY:

A. Section includes pipe and fitting materials and joining methods for the following:

1. Hot-water heating piping.
2. Makeup-water piping.
3. Blowdown-drain piping.
4. Safety-valve-inlet and -outlet piping.

1.2 ACTION SUBMITTALS:

A. Submit the following in accordance with Form 816 Article 1.20-1.05.02 and NOTICE TO CONTRACTOR – SUBMITTALS.

B. Product Data: For each type of the following:

1. Piping, fittings, and joining materials.
2. Dielectric fittings.
3. Spare Parts: Include name, address, and telephone number of in-state supplier of spare parts. No out-of-state suppliers shall be permitted.

1.3 INFORMATIONAL SUBMITTALS:

A. Quality Assurance Submittals:

1. Manufacturer Certification Letter in accordance with NOTICE TO CONTRACTOR – POTENTIAL FOR ASBESTOS CONTAINING MATERIALS.
2. Welding certificates.
3. Field quality-control test reports.

1.4 QUALITY ASSURANCE:

A. Steel Support Welding: Qualify procedures and personnel according to AWS D1.1/D1.1M, "Structural Welding Code - Steel."

B. Pipe Welding: Qualify procedures and operators according to ASME Boiler and Pressure Vessel Code: Section IX.

1. Comply with ASME B31.9, "Building Services Piping," for materials, products, and installation.
2. Certify that each welder has passed AWS qualification tests for welding processes involved and that certification is current.

PART 2 - PRODUCTS

2.1 PERFORMANCE REQUIREMENTS:

A. Hydronic piping components and installation shall be capable of withstanding the following minimum working pressure and temperature unless otherwise indicated:

1. Hot-Water Heating Piping: 125 psig at 200 deg F.
2. Blowdown-Drain Piping: 200 deg F.
3. Safety-Valve-Inlet and -Outlet Piping: Equal to the pressure of the piping system to which it is attached.

2.2 COPPER TUBE AND FITTINGS:

A. Drawn-Temper Copper Tubing: ASTM B 88, Type L.

B. Wrought-Copper Fittings: ASME B16.22.

C. Wrought-Copper Unions: ASME B16.22.

2.3 STEEL PIPE AND FITTINGS:

A. Steel Pipe: ASTM A 53/A 53M, black steel with plain ends; welded and seamless, Grade B, and wall thickness as indicated in Part 3.1 "Piping Applications."

B. Wrought-Steel Fittings: ASTM A 234/A 234M, wall thickness to match adjoining pipe.

C. Wrought Cast- and Forged-Steel Flanges and Flanged Fittings: ASME B16.5, including bolts, nuts, and gaskets of the following material group, end connections, and facings:

1. Material Group: 1.1.
2. End Connections: Butt welding.
3. Facings: Raised face.

D. Steel Pipe Nipples: ASTM A 733, made of same materials and wall thicknesses as pipe in which they are installed.

2.4 JOINING MATERIALS:

A. Pipe-Flange Gasket Materials: Suitable for chemical and thermal conditions of piping system contents.

1. ASME B16.21, nonmetallic, flat, asbestos free, 1/8-inch maximum thickness unless otherwise indicated.

a. Full-Face Type: For flat-face, Class 125, cast-iron and cast-bronze flanges.

B. Flange Bolts and Nuts: ASME B18.2.1, carbon steel, unless otherwise indicated.

C. Solder Filler Metals: ASTM B 32, lead-free alloys. Include water-flushable flux according to ASTM B 813.

D. Welding Filler Metals: Comply with AWS D10.12M/D10.12 for welding materials appropriate for wall thickness and chemical analysis of steel pipe being welded.

E. Gasket Material: Thickness, material, and type suitable for fluid to be handled and working temperatures and pressures.

2.5 DIELECTRIC FITTINGS:

A. General Requirements: Assembly of copper alloy and ferrous materials with separating nonconductive insulating material. Include end connections compatible with pipes to be joined.

B. Dielectric Flanges:

1. Standard: ASSE 1079.
2. Factory-fabricated, bolted, companion-flange assembly.
3. Pressure Rating: 150 psig or 300 psig.
4. End Connections: Solder-joint copper alloy and threaded ferrous; threaded solder-joint copper alloy and threaded ferrous.

C. Dielectric-Flange Insulating Kits:

1. Nonconducting materials for field assembly of companion flanges.
2. Pressure Rating: 150 psig or 300 psig.
3. Gasket: Neoprene or phenolic.
4. Bolt Sleeves: Phenolic or polyethylene.
5. Washers: Phenolic with steel backing washers.

D. Dielectric Nipples:

1. Standard: IAPMO PS 66.
2. Electroplated steel nipple, complying with ASTM F 1545.
3. Pressure Rating: 300 psig at 225 deg F.

4. End Connections: Male threaded or grooved.
5. Lining: Inert and noncorrosive, propylene.

PART 3 - EXECUTION

3.1 PIPING APPLICATIONS:

A. Hot-water heating piping, aboveground, NPS 2 and smaller, shall be the following:

1. Type L, drawn-temper copper tubing, wrought-copper fittings, and soldered joints.

B. Hot-water heating piping, aboveground, NPS 2-1/2 and larger, shall be the following:

1. Schedule 40 steel pipe, wrought-steel fittings and wrought-cast or forged-steel flanges and flange fittings, and welded and flanged joints.

C. Makeup-water piping installed aboveground shall be the following:

1. Type L, drawn-temper copper tubing, wrought-copper fittings, and soldered joints.

D. Blowdown-Drain Piping: Same materials and joining methods as for piping specified for the service in which blowdown drain is installed.

E. Safety-Valve-Inlet and -Outlet Piping for Hot-Water Piping: Same materials and joining methods as for piping specified for the service in which safety valve is installed with metal-to-plastic transition fittings for plastic piping systems according to piping manufacturer's written instructions.

3.2 PIPING INSTALLATIONS:

A. Plans, schematics, and diagrams indicate general location and arrangement of piping systems. Install piping as indicated unless deviations to layout are approved by the Designer.

B. Install piping in concealed locations unless otherwise indicated and except in equipment rooms and service areas.

C. Install piping indicated to be exposed and piping in equipment rooms and service areas at right angles or parallel to building walls. Diagonal runs are prohibited unless specifically indicated otherwise.

D. Install piping tight to slabs, beams, joists, columns, walls, and other building elements.

E. Install piping above accessible ceilings to allow sufficient space for ceiling panel removal.

F. Install piping to permit valve servicing.

G. Install piping at indicated slopes.

H. Install piping free of sags and bends.

I. Install fittings for changes in direction and branch connections.

J. Install piping to allow application of insulation.

K. Select system components with pressure rating equal to or greater than system operating pressure.

L. Install drains, consisting of a tee fitting and ball-valve-type hose end drain valve at low points in piping system mains and elsewhere as required for system drainage.

M. Install piping at a uniform grade of 0.2 percent upward in direction of flow.

N. Reduce pipe sizes using eccentric reducer fitting installed with level side up.

O. Install branch connections to mains using tee fittings in main pipe, with the branch connected to the bottom of the main pipe. For up-feed risers, connect the branch to the top of the main pipe.

P. Install valves according to CSI Division Section 230523, "General-Duty Valves for HVAC Piping."

Q. Install unions in piping, NPS 2 and smaller, adjacent to valves, at final connections of equipment, and elsewhere as indicated.

R. Install flanges in piping, NPS 2-1/2 and larger, at final connections of equipment and elsewhere as indicated.

S. Comply with requirements in CSI Division 23 Section 230553, "Identification for HVAC Piping and Equipment" for identifying piping.

3.3 DIELECTRIC FITTING INSTALLATION:

A. Install dielectric fittings in piping at connections of dissimilar metal piping and tubing.

B. Dielectric Fittings for NPS 2-1/2 to NPS 4: Use dielectric flanges, flange kits, or nipples.

3.4 HANGERS AND SUPPORTS:

A. Comply with requirements in CSI Division Section 230529, "Hangers and Supports for HVAC Piping and Equipment" for hanger, support, and anchor devices. Comply with the following requirements for maximum spacing of supports.

B. Install the following pipe attachments:

1. Adjustable steel clevis hangers for individual horizontal piping less than 20 feet long.
2. Adjustable roller hangers and spring hangers for individual horizontal piping 20 feet or longer.
3. Pipe Roller: MSS SP-58, Type 44 for multiple horizontal piping 20 feet or longer, supported on a trapeze.
4. Spring hangers to support vertical runs.

C. Install hangers for steel piping with the following maximum spacing and minimum rod sizes:

1. NPS 2-1/2: Maximum span, 11 feet.
2. NPS 3 and Larger: Maximum span, 12 feet.

D. Install hangers for drawn-temper copper piping with the following maximum spacing and minimum rod sizes:

1. NPS 3/4: Maximum span, 5 feet; minimum rod size, 1/4 inch.
2. NPS 1: Maximum span, 6 feet; minimum rod size, 1/4 inch.
3. NPS 1-1/4: Maximum span, 7 feet; minimum rod size, 3/8 inch.
4. NPS 1-1/2: Maximum span, 8 feet; minimum rod size, 3/8 inch.
5. NPS 2: Maximum span, 8 feet; minimum rod size, 3/8 inch.

E. Support vertical runs at roof, at each floor, and at 10-foot intervals between floors.

3.5 PIPE JOINT CONSTRUCTION:

A. Ream ends of pipes and tubes and remove burrs. Bevel plain ends of steel pipe.

B. Remove scale, slag, dirt, and debris from inside and outside of pipe and fittings before assembly.

C. Soldered Joints: Apply ASTM B 813, water-flushable flux, unless otherwise indicated, to tube end. Construct joints according to ASTM B 828 or CDA's "Copper Tube Handbook," using lead-free solder alloy complying with ASTM B 32.

D. Threaded Joints: Thread pipe with tapered pipe threads according to ASME B1.20.1. Cut threads full and clean using sharp dies. Ream threaded pipe ends to remove burrs and restore full ID. Join pipe fittings and valves as follows:

1. Apply appropriate tape or thread compound to external pipe threads unless dry seal threading is specified.
2. Damaged Threads: Do not use pipe or pipe fittings with threads that are corroded or damaged. Do not use pipe sections that have cracked or open welds.

E. Welded Joints: Construct joints according to AWS D10.12M/D10.12, using qualified processes and welding operators according to "Quality Assurance" Article.

F. Flanged Joints: Select appropriate gasket material, size, type, and thickness for service application. Install gasket concentrically positioned. Use suitable lubricants on bolt threads.

3.6 TERMINAL EQUIPMENT CONNECTIONS:

A. Sizes for supply and return piping connections shall be the same as or larger than equipment connections.

3.7 FIELD QUALITY CONTROL:

A. Prepare hydronic piping according to ASME B31.9 and as follows:

1. Leave joints, including welds, uninsulated and exposed for examination during test.
2. Provide temporary restraints for expansion joints that cannot sustain reactions due to test pressure. If temporary restraints are impractical, isolate expansion joints from testing.
3. Flush hydronic piping systems with clean water; then remove and clean or replace strainer screens.
4. Isolate equipment from piping. If a valve is used to isolate equipment, its closure shall be capable of sealing against test pressure without damage to valve. Install blinds in flanged joints to isolate equipment.
5. Install safety valve, set at a pressure no more than one-third higher than test pressure, to protect against damage by expanding liquid or other source of overpressure during test.

B. Perform the following tests on hydronic piping:

1. Use ambient temperature water as a testing medium unless there is risk of damage due to freezing. Another liquid that is safe for workers and compatible with piping may be used.
2. While filling system, use vents installed at high points of system to release air. Use drains installed at low points for complete draining of test liquid.
3. Isolate expansion tanks and determine that hydronic system is full of water.
4. Subject piping system to hydrostatic test pressure that is not less than 1.5 times the system's working pressure or a minimum of 100 psi. Test pressure shall not exceed maximum pressure for any vessel, pump, valve, or other component in

system under test. Verify that stress due to pressure at bottom of vertical runs does not exceed 90 percent of specified minimum yield strength or 1.7 times the "SE" value in Appendix A in ASME B31.9, "Building Services Piping."

5. After hydrostatic test pressure has been applied for at least 10 minutes, examine piping, joints, and connections for leakage. Eliminate leaks by tightening, repairing, or replacing components, and repeat hydrostatic test until there are no leaks.
6. Prepare written report of testing.

C. Perform the following before operating the system:

1. Open manual valves fully.
2. Inspect pumps for proper rotation.
3. Set makeup pressure-reducing valves for required system pressure.
4. Inspect air vents at high points of system and determine if all are installed and operating freely (automatic type), or bleed air completely (manual type).
5. Set temperature controls so all coils are calling for full flow.
6. Inspect and set operating temperatures of hydronic equipment, such as boilers, chillers, cooling towers, to specified values.
7. Verify lubrication of motors and bearings.

3.8 CLEANING OF EXISTING HYDRONIC PIPING:

A. Flush existing hydronic piping systems with clean water. Remove and clean or replace strainer screens. After cleaning and flushing Hydronic piping systems remove disposable fine-mesh strainers in pump suction diffusers.

END OF SECTION 232113

SECTION 235100 - BREECHINGS, CHIMNEYS, AND STACKS

PART 1 - GENERAL

1.1 SUMMARY:

A. This Section includes the following:

1. Listed double-wall vents and chimneys.

1.2 ACTION SUBMITTALS:

A. Submit the following in accordance with Form 816 Article 1.20-1.05.02 and NOTICE TO CONTRACTOR – SUBMITTALS.

B. Product Data: For the following:

1. Building-heating-appliance chimneys.

C. Shop Drawings: For vents, breechings, chimneys, and stacks. Include plans, elevations, sections, details, and attachments to other work.

1. Detail equipment assemblies and indicate dimensions, weights, loads, required clearances, methods of field assembly, components, hangers and seismic restraints, and location and size of each field connection.

1.3 INFORMATIONAL SUBMITTALS:

A. Quality Assurance Submittals:

1. Manufacturer Certification Letter in accordance with NOTICE TO CONTRACTOR – POTENTIAL FOR ASBESTOS CONTAINING MATERIALS.
2. Certified Sizing Calculations.
3. Welding certificates.

1.4 QUALITY ASSURANCE:

A. Source Limitations: Obtain listed system components through one source from a single manufacturer.

B. Welding: Qualify procedures and personnel according to AWS D1.1/D1.1M, "Structural Welding Code--Steel," for hangers and supports and AWS D9.1/D9.1M,

"Sheet Metal Welding Code," for shop and field welding of joints and seams in vents, breechings, and stacks.

C. Certified Sizing Calculations: Manufacturer shall certify venting system sizing calculations.

PART 2 - PRODUCTS

2.1 LISTED BUILDING-HEATING-APPLIANCE CHIMNEYS:

A. Available Manufacturers: Subject to compliance with requirements, manufacturers offering products that may be incorporated into the Work include, but are not limited to, the following:

1. Metal-Fab, Inc.
2. Selkirk Inc.; Selkirk Metalbestos and Air Mate.
3. Van-Packer Company, Inc.

B. Description: Double-wall metal vents tested according to UL 103 and UL 959 and rated for 1400 deg F continuously, or 1800 deg F for 10 minutes; with positive or negative flue pressure complying with NFPA 211.

C. Construction: Inner shell and outer jacket separated by at least a 1-inch annular space filled with high-temperature, ceramic-fiber insulation.

D. Inner Shell: ASTM A 666, Type 304 stainless steel.

E. Outer Jacket: Aluminized steel.

F. Accessories: Tees, elbows, increasers, draft-hood connectors, terminations, adjustable roof flashings, storm collars, support assemblies, thimbles, firestop spacers, and fasteners; fabricated from similar materials and designs as vent-pipe straight sections; all listed for same assembly.

PART 3 - EXECUTION

3.1 EXAMINATION:

A. Examine areas and conditions for compliance with requirements for installation tolerances and other conditions affecting performance of work.

1. Proceed with installation only after unsatisfactory conditions have been corrected.

3.2 APPLICATION:

A. Listed Building-Heating-Appliance Chimneys: Dual-fuel boilers and water heaters.

3.3 INSTALLATION OF LISTED VENTS AND CHIMNEYS:

A. Locate to comply with minimum clearances from combustibles and minimum termination heights according to product listing or NFPA 211, whichever is most stringent.

B. Seal between sections of positive-pressure vents according to manufacturer's written installation instructions, using sealants recommended by manufacturer.

C. Support vents at intervals recommended by manufacturer to support weight of vents and all accessories, without exceeding appliance loading.

D. Slope breechings down in direction of appliance, with condensate drain connection at lowest point piped to nearest drain.

E. Lap joints in direction of flow.

3.4 CLEANING:

A. After completing system installation, including outlet fittings and devices, inspect exposed finish. Remove burrs, dirt, and construction debris and repair damaged finishes.

B. Clean breechings internally, during and after installation, to remove dust and debris. Clean external surfaces to remove welding slag and mill film. Grind welds smooth and apply touchup finish to match factory or shop finish.

C. Provide temporary closures at ends of breechings, chimneys, and stacks that are not completed or connected to equipment.

END OF SECTION 235100

SECTION 235223 - CAST-IRON BOILERS

PART 1 - GENERAL

1.1 SUMMARY:

A. This Section includes packaged cast-iron boilers, trim, and accessories for generating hot water with the following configurations and burners:

1. Field assembled.
2. Forced-draft, gas burner.

1.2 ACTION SUBMITTALS:

A. Submit the following in accordance with Form 816 Article 1.20-1.05.02 and NOTICE TO CONTRACTOR – SUBMITTALS.

B. Product Data: Include standard wiring diagrams, performance data, operating characteristics, furnished specialties, and accessories.

1. Spare Parts: Include name, address, and telephone number of in-state supplier of spare parts. No out-of-state suppliers shall be permitted.

C. Shop Drawings: For boilers, boiler trim, and accessories. Include plans, elevations, sections, details, and attachments to other work.

1.3 INFORMATIONAL SUBMITTALS:

A. Quality Assurance Submittals:

1. Manufacturer Certification Letter in accordance with NOTICE TO CONTRACTOR – POTENTIAL FOR ASBESTOS CONTAINING MATERIALS.
2. Source quality-control test reports.
3. Field quality-control test reports.
4. Startup service reports.

1.4 CLOSEOUT SUBMITTALS:

A. Operation and Maintenance Data: For boilers, components, and accessories to include in operation, and maintenance manuals specified in Form 816 Article 1.20-1.08.14 subsection 2 and described in NOTICE TO CONTRACTOR – CLOSEOUT DOCUMENTS.

B. Warranty: Special warranty specified in this Section.

1.5 QUALITY ASSURANCE:

A. Electrical Components, Devices, and Accessories: Listed and labeled as defined in NFPA 70, Article 100, by a testing agency acceptable to authorities having jurisdiction, and marked for intended use.

B. ASME Compliance: Fabricate and label boilers to comply with ASME Boiler and Pressure Vessel Code.

C. ASHRAE/IESNA 90.1 Compliance: Boilers shall have minimum efficiency according to "Gas and Oil Fired Boilers - Minimum Efficiency Requirements."

D. I=B=R Compliance: Boilers shall be tested and rated according to HI's "Rating Procedure for Heating Boilers" and "Testing Standard for Commercial Boilers," with I=B=R emblem on a nameplate affixed to boiler.

E. UL Compliance: Test boilers for compliance with UL 795, "Commercial-Industrial Gas Heating Equipment." Boilers shall be listed and labeled by a testing agency acceptable to authorities having jurisdiction.

1.6 COORDINATION:

A. Plans indicate size, profiles, and dimensional requirements of cast-iron boilers and are based on the specific system indicated in this Section.

B. Coordinate size and location of concrete bases. Cast anchor-bolt inserts into bases. Concrete, reinforcement, and formwork requirements are specified with concrete.

1.7 WARRANTY:

A. Refer to Form 816 Article 1.20-1.06.08 and NOTICE TO CONTRACTOR – CLOSEOUT DOCUMENTS for additional information.

B. Special Warranty: Manufacturer's standard form in which manufacturer agrees to repair or replace controls and heat exchangers of boilers that fail in materials or workmanship within specified warranty period.

1. Warranty Period for Heat Exchangers: 10 years from the issuance of the Certificate of Compliance

PART 2 - PRODUCTS

2.1 MANUFACTURERS:

A. Basis-of-Design Product: Subject to compliance with requirements, provide Model No. 680 as manufactured by Weil-McLain; a United Dominion Company, or an approved equal.

2.2 MANUFACTURED UNITS:

A. Description: Factory fabricated and field assembled.

1. Ship cast-iron sections disassembled with all materials and equipment, including seals, tie rods, and insulated jacket and flue-gas vent connection for field assembly.

B. Cast-Iron Section Design:

1. Configuration: Wet base.
2. Number of Passes: Single or Multiple.
3. Sectional Joints: High-temperature sealant to seal flue-gas passages not in contact with heating medium, fiber roping, and held together with tie rods.
4. Drain and blowdown tappings.
5. Return injection tube to equalize water flow to all sections.
6. Crown inspection tappings with brass plugs.

C. Combustion Chamber: Equipped with flame observation ports, front and back.

D. Casing:

1. Jacket: Sheet metal, with snap-in or interlocking closures and powder-coated protective finish.
2. Insulation: Minimum 1-inch- thick, mineral-fiber insulation surrounding the heat exchanger.
3. Access: For cleaning between cast-iron sections.
4. Draft Hood: Flue canopy and rear flue connection shall be constructed of aluminized or stainless steel containing adjustable outlet damper assembly.
5. Mounting Frame: Steel rails to mount assembled boiler package on concrete base.

2.3 BURNER:

A. Basis-of-Design Product: Subject to compliance with requirements, provide Model No. WCR1-G-10 as manufactured by PowerFlame Incorporated, or an approved equal.

B. Burner: Welded construction with multivane, stainless-steel, flame-retention diffuser for natural gas.

C. Blower: Forward-curved centrifugal fan integral to burner, directly driven by motor; with adjustable, dual-blade damper assembly and locking quadrant to set air-fuel ratio.

1. Motor Sizes: Minimum size as indicated. If not indicated, large enough so driven load will not require motor to operate in service factor range above 1.0.

D. Gas Train: Control devices and low-high-low control sequence shall comply with requirements in FMG, IRI, and UL.

E. Pilot: Intermittent-electric-spark pilot ignition with 100 percent main-valve and pilot-safety shutoff with electronic supervision of burner flame.

F. Interlock: The burner operation circuit shall be electronically interlocked through end switches located on the combustion air dampers which will insure that the combustion air dampers are open before the burner can operate. The combustion air dampers shall close in the event of a flame failure.

2.4 TRIM:

A. Include devices sized to comply with ANSI B31.9, "Building Services Piping."

B. Aquastat Controllers: Operating, firing rate, and high limit.

C. Safety Relief Valve: ASME rated.

D. Pressure and Temperature Gage: Minimum 3-1/2-inch- diameter, combination water-pressure and -temperature gage. Gages shall have operating-pressure and -temperature ranges so normal operating range is about 50 percent of full range.

E. Drain Valve: Minimum NPS 3/4 hose-end gate valve.

2.5 CONTROLS:

A. Refer to CSI Division 23 Section 230900, "Instrumentation and Control for HVAC."

B. Burner Operating Controls: To maintain safe operating conditions, burner safety controls limit burner operation.

1. High Cutoff: Manual reset stops burner if operating conditions rise above maximum boiler design temperature.
2. Low-Water Cutoff Switch: Externally piped type to prevent burner operation on low water. Cutoff switch shall be manual-reset type. Pilot Lights: Provide for “Power On,” “Call for Heat,” “Ignition On, “Fuel On,” “High Cutoff,” “Low-Water,” and “Flame Failure”.

3. Audible Alarm: Factory mounted on control panel with silence switch; shall sound alarm for High Cutoff, Low Water, and Flame Failure.

C. Building Automation System Interface: Factory install hardware to enable building automation system to monitor, control, and display boiler status and alarms. Refer to CSI Division 23 Section 230900, "Instrumentation and Controls for HVAC" and CSI Division 23 Section 230993, "Sequence of Operations for HVAC Controls."

D. Thermal Safety Switches: Manual-reset type.

E. Emergency Shutoff Switches: Furnish to the Electrical Installer for installation where shown on the Plans.

2.6 ELECTRICAL POWER:

A. Controllers, Electrical Devices, and Wiring: Electrical devices and connections are specified in CSI Division 26 Sections.

2.7 CAPACITIES AND CHARACTERISTICS:

A. Heating Medium: Hot water.

B. Design Water Pressure Rating: 50 psig.

C. Safety Relief Valve Setting: 30 psig.

D. Entering-Water Temperature: 180 deg F.

E. Leaving-Water Temperature: 200 deg F.

F. I=B=R Input: 787 MBh.

G. Net I=B=R Output Capacity: 551 MBh.

H. Blower:

1. Motor Horsepower: 1/3.
2. RPM: 3450.

I. Electrical Characteristics:

1. Volts: 120 V.
2. Phase: Single.
3. Hertz: 60.

PART 3 - EXECUTION

3.1 EXAMINATION:

A. Before boiler installation, examine roughing-in for concrete equipment bases, anchor-bolt sizes and locations, and piping and electrical connections to verify actual locations, sizes, and other conditions affecting boiler performance, maintenance, and operations.

1. Final boiler locations indicated on Plans are approximate. Determine exact locations before roughing-in for piping and electrical connections.

B. Examine mechanical spaces for suitable conditions where boilers will be installed.

C. Proceed with installation only after unsatisfactory conditions have been corrected.

3.2 BOILER AND BURNER INSTALLATION:

A. Install gas-fired boilers according to NFPA 54.

B. Assemble boiler sections in sequence and seal between each section.

C. Assemble and install boiler trim.

D. Install electrical devices furnished with boiler but not specified to be factory mounted.

E. Install control wiring to field-mounted electrical devices.

F. Install burner assembly for boiler according to manufacturer’s instructions.

3.3 CONNECTIONS:

A. Piping installation requirements are specified in other Sections. Drawings indicate general arrangement of piping, fittings, and specialties.

B. Install piping adjacent to boiler to allow service and maintenance.

C. Connect gas piping to boiler gas-train inlet with union. Piping shall be at least full size of gas train connection. Provide a reducer if required.

D. Connect existing hot-water piping to supply- and return-boiler tappings with union or flange at each connection.

E. Install piping from safety relief valves to nearest floor drain.

F. Install piping from equipment drain connection to nearest floor drain. Piping shall be at least full size of connection. Provide an isolation valve if required.

G. Connect breeching full size to boiler outlet. Comply with requirements in CSI Division 23 Section 235100, "Breechings, Chimneys, and Stacks" for venting materials.

H. Ground equipment according to CSI Division 26 Section 260526, "Grounding and Bonding for Electrical Systems."

I. Connect wiring according to CSI Division 26 Section 260519, "Low-Voltage Electrical Power Conductors and Cables."

3.4 FIELD QUALITY CONTROL:

A. Perform tests and inspections and prepare test reports.

1. Manufacturer's Field Service: Engage a factory-authorized service representative to inspect components, assemblies, and equipment installations, including connections, and to assist in testing.

B. Tests and Inspections:

1. Perform installation and startup checks according to manufacturer's written instructions and ASME Boiler and Pressure Vessel Code Section IV.
2. Leak Test: Hydrostatic test. Repair leaks and retest until no leaks exist.
3. Operational Test: Start units to confirm proper motor rotation and unit operation. Adjust air-fuel ratio and combustion.
4. Test and adjust controls and safeties. Replace damaged and malfunctioning controls and equipment.

    a. Burner Test: Adjust burner to eliminate excess oxygen, carbon dioxide, oxides of nitrogen emissions, and carbon monoxide in flue gas and to achieve combustion efficiency.
    b. Check and adjust initial operating set points and high- and low-limit safety set points of fuel supply, water level and water temperature.
    c. Set field-adjustable switches and circuit-breaker trip ranges as indicated.

C. Remove and replace malfunctioning units and retest as specified above.

D. Occupancy Adjustments: When requested by the Engineer within 12 months of date of the issuance of the Certificate of Compliance, the Contractor shall provide on-site assistance in adjusting system to suit actual occupied conditions. Provide up to two visits to Project Site during other than normal occupancy hours for this purpose at no additional cost to the Department.

3.5 TRAINING:

A. Refer to Form 816 Article 1.20-1.08.14 subsection 3 for additional information.

B. Engage a factory-authorized service representative to train the Owner's maintenance personnel to adjust, operate, and maintain boilers.

END OF SECTION 235223

SECTION 300000 – FORM 816 SITE WORK

PART 1 - GENERAL:

PART 2 - SUMMARY:

A. CLEARING AND GRUBBING: Refer to Form 816 Article 02.01.01 for requirements related to this work.

B. EARTH EXCAVATION: Refer to Form 816 Article 02.02.01 for requirements related to this work.

C. CUT BITUMINOUS CONCRETE PAVEMENT: Refer to Form 816 Article 02.02.01 for requirements related to this work.

D. TRENCH EXCAVATION 0'-4' DEEP: Refer to Form 816 Article 02.05.01 for requirements related to this work.

E. WATER POLLUTION CONTROL: Refer to Form 816 Article 02.10.01 for requirements related to this work.

F. GRANULAR FILL: Refer to Form 816 Article 02.13.01 for requirements related to this work.

G. SEDIMENTATION CONTROL SYSTEM: Refer to Form 816 Article 02.19.01 for requirements related to this work.

H. BEDDING MATERIAL: Refer to Form 816 Article 06.51.02 for requirements related to this work.

I. MODIFIED RIPRAP: Refer to Form 816 Article 07.03.01 for requirements related to this work.

J. BITUMINOUS CONCRETE LIP CURBING: Refer to Form 816 Article 08.15.01 for requirements related to this work.

K. WATER FOR DUST CONTROL: Refer to Form 816 Article 09.43.01 for requirements related to this work.

L. FURNISHING AND PLACING TOPSOIL: Refer to Form 816 Article 09.44.01 for requirements related to this work.

PART 3 - PRODUCTS

3.1 MATERIALS:

A. CLEARING AND GRUBBING: N/A

B. EARTH EXCAVATION: N/A

C. CUT BITUMINOUS CONCRETE PAVEMENT: N/A

D. TRENCH EXCAVATION 0'-4' AND 0'-10' DEEP: N/A

E. WATER POLLUTION CONTROL: Refer to Form 816 Article 02.10.02 for requirements related to this work.

F. GRANULAR FILL: Refer to Form 816 Article 02.13.02 for requirements related to this work.

G. SEDIMENTATION CONTROL SYSTEM: Refer to Form 816 Article 02.19.02 for requirements related to this work.

H. BEDDING MATERIAL: Refer to Form 816 Article 06.51.02 for requirements related to this work.

I. MODIFIED RIPRAP: Refer to Form 816 Article 07.03.02 for requirements related to this work.

J. BITUMINOUS CONCRETE LIP CURBING: Refer to Form 816 Article 08.15.02 for requirements related to this work.

K. WATER FOR DUST CONTROL: N/A

L. FURNISHING AND PLACING TOPSOIL: Refer to Form 816 Article 09.44.02 for requirements related to this work.

PART 4 - EXECUTION

4.1 EXECUTION:

A. CLEARING AND GRUBBING: Refer to Form 816 Article 02.01.03 for requirements related to this work.

B. EARTH EXCAVATION: Refer to Form 816 Article 02.02.03 for requirements related to this work.

C. CUT BITUMINOUS CONCRETE PAVEMENT: Refer to Form 816 Article 02.02.03 for requirements related to this work.

D. TRENCH EXCAVATION 0'-4' AND 0'-10' DEEP: Refer to Form 816 Article 02.05.03 for requirements related to this work.

E. WATER POLLUTION CONTROL: Refer to Form 816 Article 02.10.03 for requirements related to this work.

F. GRANULAR FILL: Refer to Form 816 Article 02.13.03 for requirements related to this work.

G. SEDIMENTATION CONTROL SYSTEM: Refer to Form 816 Article 02.19.03 for requirements related to this work.

H. BEDDING MATERIAL: Refer to Form 816 Article 06.51.03 for requirements related to this work.

I. MODIFIED RIPRAP: Refer to Form 816 Article 07.03.03 for requirements related to this work.

J. BITUMINOUS CONCRETE LIP CURBING: Refer to Form 816 Article 08.15.03 for requirements related to this work.

K. WATER FOR DUST CONTROL: Refer to Form 816 Article 09.43.03 for requirements related to this work.

L. FURNISHING AND PLACING TOPSOIL: Refer to Form 816 Article 09.44.03 for requirements related to this work.

END OF SECTION 300000

SECTION 300500 – TEMPORARY MAINTENACE WORK AREA

PART 1 - GENERAL

1.1 SUMMARY:

A. The Contractor shall provide temporary facilities for the exclusive use of Department personnel.

B. The Contractor shall:

1. Set-up all temporary facilities on the Project Site in Glastonbury.
2. Connect all temporary facilities to all utilities and support services.
3. Make all temporary facilities fully functional and acceptable to the Engineer prior to the start of demolition of the existing building or the existing motor fuel island.

C. The Department will make the following materials available to the Contractor for pickup at the Department's maintenance facility located at 1640 Saybrook Road, Haddam, CT to establish the temporary facilities:

1. 2,000 gallon Diesel Aboveground Storage Tank.
2. 2,000 gallon Unleaded Aboveground Storage Tank
3. Access Stairs.
4. Unleaded Fuel Dispenser.
5. Diesel Fuel Dispenser.
6. Fuel Management Unit.
7. Nozzles and Hoses.
8. Filters and Adapters.

Contact Mr. Jeffrey Tedesco at (860) 666-8568 a minimum of 72 hours in advance to make arrangements to pick up materials.

D. Temporary facilities shall remain on the Project Site in Glastonbury for the duration of the Project, including Contract time extensions if any occur, and if required for a maximum of 30 days thereafter.

1.2 SUBMITTALS:

A. Submit the following in accordance with Form 816 Article 1.20-1.05.02 and NOTICE TO CONTRACTOR – SUBMITTALS for the fuel dispensing equipment.

B. Product Data: For each type of product indicated. Include rated capacities of selected model clearly indicated, installation and start-up instructions, and calibration charts.

C. Shop Drawings: Include wiring diagrams that detail wiring for power, signal, and control systems and differentiate between portions of wiring that are factory-installed and portions to be field-installed.

D. The Engineer will approve the remaining materials to be installed by the Contractor, unless otherwise noted.

PART 2 - PRODUCTS

2.1 FUEL DISPENSING ISLAND:

A. Granular Fill: Refer to Form 816, Section 2.13 “Granular Fill” for material and construction methods required.

B. Concrete Pads: Comply with the requirements in CSI Division 03 Section 033000, “Cast-in-Place Concrete.”

C. Precast Concrete Barriers: Refer to Form 816, Section 8.21 “Precast Concrete Barrier Curb” for material and construction methods required.

D. Temporary Steel Plate: 1” thick steel plate, conforming to ASTM A36, with minimum dimensions as shown on the plans.

E. The fuel dispensing equipment (tank, tank accessories, fuel dispenser, FMU, emergency controls and miscellaneous components) shall meet all of the applicable regulatory requirements set forth by ASTM, NFPA, STI, and UL.

F. The Contractor shall provide mounting hardware and miscellaneous parts to complete installation.

G. Floodlight and Support: The floodlights shall be rugged, weather resistant die-cast aluminum with gasket, and shall be equipped with a photocell for Dusk-to-Dawn operation. Lithonia model # OFLR-6LC-120-P-WH with two tool-free adjustable heads with high-performance 5000K CCT LED’s, 120 Volts, and photocell. The mast support for the lights shall be composed of steel c-channel as specified under Specification CSI Division 26 Section 260529, "Hangers and Supports for Electrical Systems."

H. The Contractor shall use threaded RGSC for all power and communication feeds when conduits enter into a Class I, Division 1/Division 2 hazardous location and for all surface mounted conduit around the dispenser as shown on Drawing No. ELE16.

I. The Contractor shall use a minimum #12 stranded copper conductors rated for 600 volts with THWN or THNN insulation within the Class I, Division 1 hazardous location unless otherwise noted. Grounding wire shall be green-type.

J. Junction Boxes shall be threaded, explosion-proof, Model No. GRSS-2 as manufactured by Killark, or an approved equal.

K. Explosion-proof fittings shall be threaded, recessed-type, close-up plugs, Model No. EYSF75 as manufactured by Appleton, or an approved equal. Screwdriver slotted close-up plugs shall not be accepted. When necessary to employ flexible connections, as at motor terminals, flexible fittings listed for Class I locations shall be used.

L. Conduit Seals shall be approved for Class I, Division I locations as described in section 501-15(a)-(f) of the NEC. Sealing compound shall be approved and shall provide a seal against passage of gas or vapors through the seal fitting, shall not be affected by the surrounding atmosphere or liquids, shall not have melting point of less than 200 degrees F. In a completed seal, the minimum thickness of the sealing compound shall no be less than the trade size of the sealing fitting and, in no case, less than 5/8 inch.

M. Each circuit leading to or through dispensing equipment, including equipment for remote pumping systems, shall be provided with a clearly identified and readily accessible switch or other acceptable means, located remote from the dispensing device, to disconnect simultaneously from the source of supply, all conductors of the circuit, including the grounded (neutral) conductor. Emergency controls shall be more than 20 feet but less than 100 feet from the dispenser.

N. Emergency Shut-off (Quick Stop Button): The quick stop button functions to remove power by depressing the red mushroom-shaped button. Power restored by manually resetting the shunt trip device and turning the button clockwise a partial turn until it pops back out to the reset position.

O. The dispenser shall be controlled by the dispenser's "on/off" handle at the point of fuel distribution and remotely by the circuit breaker.

P. Fixed wiring: Threaded RGSC with termination fittings and wiring methods approved for Class I location shall be employed. All boxes, fittings and joints shall be threaded for connection to conduit and shall be explosion-proof. Threaded joints shall be made up with at least 5 threads fully engaged.

Q. Grounding: All metal raceways and all non-current carrying metal parts of fixed or portable electrical equipment, regardless of voltage, shall be grounded as provided in NEC Article 250 and per Article 514-16. The locknut–bushing and double-locknut types of contacts shall not be depended on for bonding purposes, but bonding jumpers with proper fittings shall be used. Such means of bonding shall apply to all intervening raceways, fittings, boxes, enclosures, etc., between Class I location and the point of grounding for service equipment. Bonding shall be jumpers with proper fittings for bonding purposes.

R. An approved seal shall be provided in each conduit run entering or leaving a dispenser or any cavities or enclosures in direct communication therewith. The sealing fitting shall be the first fitting after the conduit emerges from the earth or the concrete.

S. Splices and taps shall not be made in fittings intended only for sealing with compound, nor shall other fittings in which splices or taps are made be filled with compound.

T. The cross-sectional area of the conductors permitted in a seal shall not exceed 25% of the cross-sectional area of a RGSC of the same trade.

PART 3 - EXECUTION

3.1 INSTALLATION, GENERAL:

A. The Contractor shall locate temporary facilities where shown on the plans and as directed by the Engineer. The temporary facilities shall be installed in accordance with Form 816 Article 1.08.02, as supplemented herein.

3.2 INSTALLATION, FUEL DISPENSING ISLAND:

A. The Contractor shall install each component of the fuel dispensing island as shown on the plans, in accordance with manufacturer's installation instructions, and in accordance with NFPA 30 and 30A. Additional installation requirements are described herein, where applicable. The Contractor shall provide a fully operational system when complete.

B. The Contractor shall modify the AST and dispenser as necessary to be used to store and dispense diesel fuel. The Contractor shall verify fuel dispenser is secured to tank and all necessary piping connections are completed.

C. The Contractor shall verify the existing fill assembly complies with the requirements of NFPA 30A and incorporates the following features:

1. A lockable tight fill cap, adapter, fill pipe, and drop tube.
2. The bottom of the fill drop tube shall be cut at a 45-degree angle with the open end facing the long dimension of the tank.
3. The drop tube shall terminate 6-inches from the bottom of the tank.

D. The Contractor shall verify the existing overfill prevention equipment complies with the requirements of NFPA 30A and incorporates the following features:

1. An audible alarm which will sound when the product level in the tank has reached 85% of tank capacity, or a liquid level gauge marked at 85% of tank capacity.
2. A positive shut-off fill limiter which will stop the flow of liquid into the tank when product level reaches 90% of tank capacity.
3. The fill-limiting device shall be rated to accept the fill flow rate and pressure.

E. The Contractor shall verify the existing product piping at the tank includes and anti-siphon device that will prevent the flow of liquid from the tank unless the suction pump is operating, in accordance with NFPA 30A.

F. The Contractor shall verify that a pressure relief valve is included in each segment of blocked piping that will relieve excessive pressure resulting from thermal expansion and return any excess product to the tank.

G. The tank and associated equipment shall be installed in accordance with the STI installation instructions for Fireguard aboveground tanks (Publication No. R942-94, Installation and Testing Instructions for Thermally Insulated Lightweight Double Wall Fireguard Aboveground Storage Tanks).

H. The Contractor shall (1) use tank handling equipment of adequate size to lift and set the tank without dragging or dropping it; (2) advise the Engineer of any shipping or handling damage encountered; and (3) not make any modifications to any tank without the prior written approval of the manufacturer and the Engineer. Such modifications include any welding on tank shells, adding penetrations in the tank structure, or repairing damage that might affect the integrity of the inner or outer tank.

I. The Contractor shall locate the temporary steel plate where shown on the plans and as directed by the Engineer.

J. The Contractor shall locate precast concrete barriers where shown on the plans and as directed by the Engineer.

K. The Contractor shall protect existing exposed piping and equipment from corrosion by painting or wrapping it with a coating that is compatible with diesel fuel and the conditions of the exposure.

L. The Contractor shall locate the concrete pad for the temporary FMU where shown on the plans and as directed by the Engineer.

M. Install temporary FMU and retrofit to work with dispenser.

N. Provide a fully operational temporary automated fuel management system. The temporary FMU shall interface with the existing head-end located at 2800 Berlin Turnpike, Newington, CT. Coordinate dial-up programming with the Department Fuel Control. The following information shall be recorded by the system for each fueling transaction: user identification number, vehicle odometer/hourmeter, vehicle number, quantity of fuel dispensed, fuel site, date and time, hose number and product number, and key type.

O. FMU Power Requirements: 120 volts, 60 Hz, from a separate dedicated circuit.

P. Floodlight and Support: The Contractor shall firmly attach the c-channel mast to the precast concrete barrier. The Contractor shall install a surface mounted metallic box to

attach the floodlights to the mast. Route surface mounted RGSC conduit along the c-channel to feed the floodlights.

Q. The Contractor shall install all conduit, boxes, and wiring in accordance to NFPA 70 and shall run green bond wire in all conduits.

R. The Contractor shall install RGSC from the source of power to the fuel dispensing system, and complete conduit, terminations with explosion-proof fittings. All E.Y. fittings for conduit runs to the fuel island shall be properly sealed. The Contractor shall leave close-up plugs hand tight after sealing to provide for the Engineer's inspection of these fittings.

S. The Contractor shall extend fuel dispensing island power and communication circuits from the power panels and communication cabinets in the temporary service area to the temporary fuel island location. The Contractor shall complete all necessary terminations in accordance with NEC Article 514 and sections described above.

T. The Contractor shall perform air pressure testing of the inner tank and secondary containment tank on-site in the presence of the Engineer before placing the tank in service. Refer to STI Publication No. R942-94 for complete procedural details.

U. The Contractor shall test piping on-site in the presence of the Engineer before placing the piping in service. The Contractor shall perform minimum hydrostatic or pneumatic test-pressures measured at highest point in system, minimum 1.5 times the designed working pressure but not less than 5 psig for minimum 2 hours, isolate storage tanks if test pressure in piping will cause pressure in storage tanks to exceed 10 psig and shall soap pipe fittings. Piping will be considered defective if it does not pass tests. Defective piping shall be repaired or replaced, and then retested.

V. The Contractor shall test each component of the system for calibration, tightness and proper operation in accordance with the instructions of the component manufacturer.

W. Testing shall be documented by the Contractor and witnessed by the Engineer. Record the date and time of the test, the name of the tester and their affiliation with the Project, and the names of each individual witnessing the test. The Contractor shall record the test method, duration and results, and provide a record of the testing to the Engineer at the time of system start-up.

X. The Owner will supply diesel fuel to fill the temporary AST upon its acceptance by the Engineer.

3.3 PROJECT CLOSEOUT:

A. When the Engineer determines that the temporary facilities are no longer needed, the Department will empty the temporary AST.

B. The Contractor shall prepare the following Owner equipment for salvage and removal from the Project Site, including but not limited to the removal of connected utilities:

1. Equipment identified in Part 1.1C.
2. Fuel Island components and plywood backboards.

C. The Contractor shall move the Owner property identified in Part 3.4B to the Department's Maintenance Facility located at 1640 Saybrook Road, Haddam, CT, 06438 within 14 calendar days of their abandonment.

D. The Contractor shall:

1. Demolish all work not identified to be salvaged.
2. Relocate the precast concrete barriers on the Project Site as directed by the Engineer
3. Complete Project Site work.

END OF SECTION 300500

SECTION 302000 – GENERAL SITE WORK

PART 1 - GENERAL

1.1 SUMMARY:

A. Section Includes:

1. Steel Bollard.
2. Bollard.
3. Flagpole.
4. Peastone Gravel Backfill

1.2 ACTION SUBMITTALS:

A. Submit the following in accordance with Form 816 Article 1.20-1.05.02 and NOTICE TO CONTRACTOR – SUBMITTALS.

B. Product Data: For each type of product indicated.

C. Shop Drawings: For concrete pad.

PART 2 - PRODUCTS

2.1 MATERIALS:

A. STEEL BOLLARD:

1. Steel bollard: Schedule 40 galvanized steel pipe, 4 inch outside diameter, conforming to the requirements of ASTM-A53.

2. Concrete: Class "A" meeting the requirements of CSI Division 03, Section 033000, "Cast-in-Place Concrete".

3. Paint: Bollard shall be primed and finished with "Highway Safety Yellow" rust preventive metal paint.

B. BOLLARD:

1. Steel bollard: Schedule 80 galvanized steel pipe, 8 inch nominal size (8.625" O.D.), conforming to the requirements of ASTM-A53.

2. Concrete: Class “A” meeting the requirements of CSI Division 03, Section 033000, “Cast-in-Place Concrete”.

3. Polyethylene sleeve: Bumper (Bollard) Post Sleeve #PLS1009, as manufactured by New Pig Corporation or approved equivalent. Sleeve shall be yellow in color with ¼”-thick polyethylene shell.

C. FLAGPOLE: Flagpoles shall be as manufactured by American Flag, Bohemia, New York, or approved equal. Poles shall be tapered aluminum tubing and shall measure 40'-0" high from the finished grade. Provide standard revolving truck and cleat and 6" ball. Provide copper clad lightning rod. Flagpole foundation shall comply with manufacturer’s recommendations.

D. PEASTONE GRAVEL BACKFILL: Peastone gravel backfill shall be composed entirely of uncrushed stone sized rounded particles conforming to Section M.01.01 of the Form 816, Grading No. 6 unless otherwise specified by the tank manufacturer for compliance with the tank warranty.

PART 3 - EXECUTION

3.1 EXECUTION:

A. STEEL BOLLARD: Bollards shall be installed in the locations shown on the plans. The steel pipe shall be securely set plumb in concrete and shall comply with the manufacturer’s recommendations.

B. BOLLARD: Bollards shall be installed in the locations shown on the plans. The steel pipe shall be securely set plumb in concrete and filled with concrete. The polyethylene sleeve shall be installed as recommended by the manufacturer.

C. FLAGPOLE: Install flagpole in location shown on the plans. All materials shall be installed in strict accordance with the manufacturer's recommendations.

D. PEASTONE GRAVEL BACKFILL: Material shall be clean, dry and free from ice and snow, and shall be installed in accordance with the tank manufacturer's recommendations and as indicated on the Drawings, stated herein in the Specifications or as directed by the Engineer.

1. Peastone gravel should be added and compacted in 12-inch lifts.

END OF SECTION 302000

SECTION 304000 – FENCING AND GATES

PART 1 - GENERAL

1.1 SUMMARY:

A. Section Includes:

1. Chain link fence and gates.

1.2 ACTION SUBMITTALS:

A. Submit the following in accordance with Form 816 Article 1.20-1.05.02 and NOTICE TO CONTRACTOR – SUBMITTALS.

1. Product Data in the form of manufacturer's technical data, specifications, and installation instructions for fence and gate posts, fabric, gates, and accessories.

2. Quality Assurance Submittals:

a. Installer Qualifications: Engage an experienced Installer who has at least three years' experience and has completed at least five chain link fence projects with same material and of similar scope to that indicated for this Project with a successful construction record of in-service performance.

3. Single-Source Responsibility: Obtain chain link fences and gates, including accessories, fittings, and fastenings, from a single source.

PART 2 - PRODUCTS:

2.1 MATERIALS:

A. 10’ HIGH POLYVINYL CHLORIDE CHAIN LINK FENCE, 6’ POLYVINYL CHLORIDE CHAIN LINK DOUBLE GATE 10’ HIGH:

1. General: Round member sizes are given in actual outside diameter (OD) to the nearest thousandth of inches. Round fence posts and rails are often referred to in ASTM standard specifications by nominal pipe sizes (NPS) or the equivalent trade sizes in inches. The following indicates these equivalents all measured in inches:

Actual OD	NPS Size	Trade Size
1.315	1	1-3/8
1.660	1-1/4	1-5/8
1.900	1-1/2	2
2.375	2	2-1/2
2.875	2-1/2	3
3.500	3	3-1/2
4.000	3-1/2	4
6.625	6	6-5/8
8.625	8	8-5/8

2. Fence Posts and Rail:

a. General: Type I Round Posts, standard weight (schedule 40) galvanized-steel pipe conforming to ASTM F 1083, according to heavy industrial requirements of ASTM F 669, Group IA, with minimum yield strength of 25,000 psi, not less than 1.8 oz. of zinc per sq. ft. Type A coating inside and outside according to ASTM F 1234, as determined by ASTM A 90, and weights per foot as follows:

Actual OD(in)	Weight(lb/ft)
1.315	1.68
1.660	2.27
1.900	2.72
2.375	3.65
2.875	5.79
3.500	7.58
4.000	9.11
6.625	8.97
8.625	28.55

a. Supplemental Color Coating: In addition to above metallic coatings, provide posts and rails with manufacturer's standard polymer coating according to ASTM F 1234, 10-mil minimum polyvinyl chloride (PVC) or 3-mil minimum polyester plastic resin finish applied to exterior surfaces and, except for tubular shapes, to exposed interior surfaces. Color to match chain link fabric.

b. Line or Intermediate Posts: 2.375-inch OD Type I round steel pipe.

c. End, Corner, and Pull Posts: 2.875-inch OD Type I round steel pipe.

d. Swing Gate Posts: Furnish posts to support single gate leaf, or one leaf of a double-gate installation, according to ASTM F 900, sized as follows for steel and pipe posts:

i. Fence height over 6 feet and gate leaf width:

a.) Up to and including 6 Feet: 2.875-inch OD pipe weighing at least 4.64 lb per ft.

e. Top Rail: Manufacturer's longest lengths (17 to 21 feet) with swedged-end or expansion-type coupling. Provide rail ends or other means for attaching top rail securely to each gate, corner, pull, and end post. 1.660-inch OD Type I round steel pipe.

3. Gate Frame Members:

a. Swing Gate Frame Members: Provide horizontal and vertical members to ensure proper gate operation and attachment of fabric, hardware, and accessories. The gate frame shall be constructed from same material and finish as fence framework, welded at all corners or assembled with corner fittings. Members are sized as follows for steel and pipe posts:

i. Gate height over 6 feet: 1.90-inch OD round pipe weighing at least 2.28 lb. per foot.

b. Truss rods: Gate frames assembled with corner fittings shall have adjustable truss rods. 5/16-inch OD round pipe of the same metal and finish as the frame.

c. Interior bracing: Gate leaf shall have vertical interior bracing at maximum intervals of 8 ft. and shall have a horizontal interior member if fabric height is 8 ft. or more. Additional horizontal, vertical or diagonal member or diagonal truss rods may be needed to comply with ASTM F 900 Section 5.2.1. 5/16-inch OD round pipe of the same metal and finish as the frame.

4. Fabric:

a. Steel Chain-Link Fence Fabric: Fabricated in one-piece widths for fencing 12 feet and less in height to comply with CLFMI "Product Manual" and with requirements indicated below:

i. Mesh and Wire Size: 2-inch mesh, 0.148-inch diameter (9 gage).
ii. Coating: ASTM A 817, Type 1, 0.40 oz./ft2 aluminum coating.
iii. PVC Coating Color: Dark green, complying with ASTM F 934.

b. Chain Link Gate Fabric: The fabric shall same as specified for fence. Secure fabric at vertical edges with tension bars and bands and to top and bottom of frame with tie wires.

5. Fittings and Accessories:

a. General: Comply with ASTM F 626. Mill-finished aluminum or galvanized iron or steel to suit manufacturer's standards. Unless specified otherwise, hot-dip galvanize pressed steel or cast-iron fence fittings and accessories with at least 1.2 oz. zinc per sq. ft. as determined by ASTM A 90.

b. Supplemental Color Coating: In addition to above metallic coatings, provide a 10-mil minimum polyvinyl chloride (PVC) or 3-mil minimum polyester plastic resin finish applied to exterior surfaces and, except inside cap shapes, to exposed interior surfaces. Color to match chain link fabric.

c. Post and Line Caps: Provide weather-tight closure cap for each post. Provide line post caps with loop to receive top rail.

d. Post Brace Assembly: Manufacturer's standard adjustable brace. 1.660-inch OD Type I round steel pipe for brace, and truss to line posts with 3/8-inch-diameter rod and adjustable tightener. Provide manufacturer's standard galvanized-steel, cast-iron or cast-aluminum cap for each end.

e. Top Rail Sleeves: Rail sleeve material shall be a minimum of 0.051 in. in thickness, and a minimum of 6 in. in length. Rail sleeve must be fabricated to prevent movement along the rail.

f. Tension or Stretcher Bars: Hot-dip galvanized steel with a minimum length 2 inches less than the full height of fabric, a minimum cross section of 3/16 inch by 3/4 inch, and a minimum of 1.2 oz. of zinc coating per sq. ft. Provide one bar for each gate and end post, and two for each corner and pull post, except where fabric is integrally woven into the post.

g. Tension and Brace Bands: ¾-inch-wide minimum hot-dip galvanized steel with a minimum of 1.2 oz. of zinc coating per sq. ft.

   i. Tension Bands: 0.074 inch thick (14 gage) minimum.
   ii. Brace Bands: 0.105 inch thick (12 gage) minimum.

h. Truss Rod Assembly: Steel rods shall be 5/16 in. diameter and it and all related devices shall be hot-dip galvanized after threading with a minimum of 1.2 oz. of zinc coating per sq. ft. Truss rod and tightener shall be capable of withstanding a tension of 2000 lb.

i. Tension Wire: 0.177-inch-diameter metallic-coated steel Marcelled tension wire conforming to ASTM A 824 with finish to match fabric. Coating shall be Type I aluminum with a minimum coating weight of 0.40 oz. per sq. ft. as determined by ASTM A 824.

j. Tie Wires and Clips: 0.148-inch diameter (9 gage)steel with a tensile strength range from 55 to 65 ksi with a minimum coating of 0.40 oz./ft2 of aluminum. Round metallic-coated steel tie wires, clips and hog rings shall withstand all forming or twisting operations without cracking or flaking of the aluminum coating. Bend ends of wire to minimize hazard to persons or clothing.

k. Privacy Slats: Winged-type, Extruded PVC memebers of length to match fence height.

i. Color: Green

6. Gate Hardware

a. General: Provide galvanized hardware and accessories for each gate.

b. Hinges: Size and material to suit gate size, non-lift-off type, offset to permit 180-degree gate opening. Provide 1-1/2 pair of hinges for each leaf over 6-foot nominal height.

c. Latch: Drop rod or plunger-bar type to permit operation from either side of gate, with padlock eye as an integral part of latch.

d. Keeper: Provide a keeper for vehicle gates that automatically engages gate leaf and holds it in the open position until manually released.

e. Gate Stops: Provide gate stops for double gates consisting of mushroom-type flush plate with anchors, set in concrete, and designed to engage a center drop rod or plunger bar. Include a locking device and padlock eyes as an integral part of the latch, permitting both gate leaves to be locked with a single padlock.

f. Chain: Provide welded stainless steel, Type 347 0.375 dia. chain in lengths required as specified by the Engineer.

PART 3 - EXECUTION:

3.1 EXECUTION:

A. 10’ HIGH POLYVINYL CHLORIDE CHAIN LINK FENCE, 6’ POLYVINYL CHLORIDE CHAIN LINK DOUBLE GATE 10’ HIGH:

1. General: Install fence to comply with ASTM F 567, in the location indicated on the plans. Do not begin installation and erection before final grading is completed, unless otherwise permitted.

2. Excavation: Excavation and backfilling shall be performed as described herein and in accordance with Article 2.02.03 of Form 816.

3. Drill or hand-excavate (using post-hole digger) holes for all posts to diameters and spacings indicated, in firm, undisturbed or compacted soil. Excavate holes for each fence post to a minimum of 9 inches in diameter for all line posts and 12 inches in diameter for terminal, pull or corner posts, but not less than four times the largest cross section of post. Excavate holes for all fence posts to depths not less than 40 inches below finish grade surface. Gate post holes shall comply with the following:

   a. Gate width up to 12 feet: Excavate to a minimum diameter of 12 in. and a minimum depth of 40 in.

4. Setting Posts: Center and align posts in holes 4 inches above bottom of excavation. Space a maximum of 10 feet o.c., unless otherwise indicated. Pull posts shall be provided where a change in vertical or horizontal alignment of ten (10) degrees or more occurs. Place concrete for the full depth of excavation, around all posts (including, but not limited to, line, corner and gate posts) and vibrate or tamp for consolidation. Unless otherwise indicated, extend concrete footings 2 inches above grade and trowel to a crown to shed water. Protect portion of posts above ground from concrete splatter. Check each post for vertical and top alignment, and hold in position during placement and finishing operations.

5. Brace Assemblies: Install braces at end and gate posts and at both sides of corner and pull posts. Locate horizontal braces at mid-height of fabric on fences with top rail and at two thirds fabric height on fences without top rail. Install so posts are plumb when diagonal rod is under proper tension.

6. Top Rails: Run rail continuously through line post caps for entire length of fence, terminating at rail end attached to posts or at post caps fabricated to receive rail. Provide expansion couplings as recommended by fencing manufacturer.

7. Bottom Tension Wire: Install tension wire within 6 inches of bottom of fabric before stretching fabric and tie to each post with not less than same gage and type of wire. Pull wire taut, without sags. Fasten to fabric with wire ties spaced a maximum of 24 inches o.c.

8. Fabric: Apply fabric to outside of the area enclosed. Leave approximately 2 inches between finish grade and bottom selvage. Place the fabric by securing one end and applying sufficient tension to remove all slack before making attachment elsewhere. Tighten the fabric to provide a smooth uniform appearance free from sag. Cut the fabric by untwisting a picket and attach each span independently at all terminal posts. Thread tension bars through fabric and secure to end, corner,

pull, and gate posts with tension bands spaced not over 15 inches o.c. Fasten fabric to the line posts at intervals not exceeding 15 in. Fasten fabric to the rail or tension wire at intervals not exceeding 24 in.

9. Privacy Slats: Install privacy slats according to manufacturer's instructions.

10. Fasteners: Install nuts for tension bands and carriage bolts on the side of the fence opposite the fabric side. Peen ends of bolts or score threads to prevent removal of nuts for added security.

11. Gate Installation: Install gates, according to manufacturer's instructions, plumb, level, and secure for full opening without interference. Install ground-set items in concrete for anchorage. Adjust hardware for smooth operation and lubricate where necessary. After repeated operation of completed installation equivalent to 3 days use by normal traffic, readjust gates and gate operators and controls for optimum operating condition and safety. Lubricate operating equipment and clean exposed surfaces.

END OF SECTION 304000

SECTION 305000 – TURF ESTABLISHMENT

PART 1 - GENERAL

1.1 SUMMARY:

A. TURF ESTABLISHMENT - LAWN: This work shall consist of providing an accepted stand of established grass by furnishing and placing seed as shown on the plans or ordered by the Engineer.

1.2 ACTION SUBMITTALS:

A. Submit the seed mixes in accordance with Form 816 Article 1.20-1.05.02 and NOTICE TO CONTRACTOR – SUBMITTALS.

PART 2 - PRODUCTS

2.1 MATERIALS:

A. TURF ESTABLISHMENT - LAWN: The materials for this work shall conform to the requirements of Form 816 Article 9.50. The following mix shall be used:

In order to preserve and enhance the diversity, the source for seed mixtures shall be locally obtained within the Northeast USA including New England, New York, Pennsylvania, New Jersey, Delaware, or Maryland. One approved seed mixture is detailed. Other proposed mixtures must be approved by the ConnDOT Landscape Design office.

Proportion (%)	Species Common Name	Species Scientific Name
20	Abbey Kentucky Bluegrass	Poa pratensis
10	Envicta Kentucky Bluegrass	Poa pratensis
25	Pennlawn Red Fescue	Festuca rubra
15	Ambrose Chewing Fescue	Festuca rubra
30	Manhattan Ryegrass	Lolium perenne

PART 3 - EXECUTION

3.1 EXECUTION:

A. TURF ESTABLISHMENT - LAWN: Construction methods shall be those established as agronomically acceptable and feasible, and that are approved by the Engineer. Rate of application shall be field determined in Pure Live Seed (PLS) based on the minimum

purity and minimum germination of the seeed obtained. Calculate the PLS for each seed species in the mix. Adjust the seeding rate for the above composition mix, based on 250 lbs/acre. The seed shall be mulched in accordance with Form 816 Article 9.50.03.

END OF SECTION 305000

SECTION 307000 – SANITARY/ DRAINAGE

PART 1 - GENERAL

1.1 SUMMARY:

A. Section Includes:

1. Access Manhole and Cover (Utility)
   a. Work under this item shall consist of a new steel access hatch cover installed in accordance with this specification, at the indicated locations and conforming to the grades and dimensions shown on the plans or as required by the Engineer. This item shall include the removal of existing and installation of a new steel access hatch cover, removal and installation of 1 foot thick concrete slab encasement and all associated saw cut of bituminous concrete, excavation, backfilling, concrete and reinforcing steel to the satisfaction of the Engineer.

1.2 ACTION SUBMITTALS:

A. Submit the following in accordance with Form 816 Article 1.20-1.05.02 and NOTICE TO CONTRACTOR – SUBMITTALS.
   1. Product Data: Include rated capacities of selected model clearly indicated, furnished specialties and accessories.
   2. Warranty: Submit executed copy of manufacturer's standard warranty.

PART 2 - PRODUCTS

2.1 MATERIALS:

A. ACCESS MANHOLE AND COVER (UTILITY)

1. Concrete:

   a. Comply with CSI Section 033000, "Cast-in-Place Concrete" for all applicable materials, including, but not limited to, forms, concrete materials and expansion joint filler.

2. Steel Access Hatch Cover:

   a. Quality Assurance:
      i. Manufacturer: A minimum of 5 years of experience manufacturing similar products.

ii. Installer: A minimum of 2 years of experience installing similar products.

iii. Manufacturer's Quality System: Registered to ISO 9001:2008 Quality Standards including in-house engineering for product design activities.

b. Delivery, Storage, and Handling:

i. Deliver products in manufacturer's original packaging. Store materials in a dry, protected, well-vented area. Inspect product upon receipt and report damaged material immediately to delivering carrier and note such damage on the carrier's freight bill of lading.

c. Warranty:

i. Manufacturer's Warranty: Provide manufacturer's standard warranty. Materials shall be free of defects in material and workmanship for a period of twenty-five years from the date of purchase. Should a part fail to function in normal use within this period, manufacturer shall furnish a new part at no charge.

d. Manufacturer:

i. Basis-of-Design Manufacturer: Type J-AL H20 Channel Frame Loading Access Door by The Bilco Company or approved equals.

e. Access Door:

i. Furnish and install where indicated on plans vault access door Type J-AL H20, size : width (36") x length (36"). The floor access door shall be single leaf and pre-assembled from the manufacturer.

3. Performance Characteristics:

a. Cover: Shall be reinforced to support AASHTO H-20 wheel load with a maximum deflection of 1/150th of the span. Operation of the cover shall be smooth and easy with controlled operation throughout the entire arc of opening and closing. Operation of the cover shall not be affected by temperature. Entire door, including all hardware components, shall be highly corrosion resistant.

b. Cover: Shall be 1/4" (6mm) aluminum diamond pattern.

c. Frame: Channel frame shall be extruded aluminum with bend down anchor tabs around the perimeter.

d. Hinges: Shall be specifically designed for horizontal installation and shall be through bolted to the cover with tamperproof Type 316 stainless steel

lock bolts and shall be through bolted to the frame with Type 316 stainless steel bolts and locknuts.

e. Lifting mechanisms: Manufacturer shall provide the required number and size of compression spring operators enclosed in telescopic tubes to provide, smooth, easy, and controlled cover operation throughout the entire arc of opening and to act as a check in retarding downward motion of the cover when closing. The upper tube shall be the outer tube to prevent accumulation of moisture, grit, and debris inside the lower tube assembly. The lower tube shall interlock with a flanged support shoe fastened to a formed 1/4" (6mm) gusset support plate.

f. A removable exterior turn/lift handle with a spring loaded ball detent shall be provided to open the cover and the latch release shall be protected by a flush, gasketed, removable screw plug.

4. Hardware:

a. Hinges: Heavy forged Type 316 stainless steel hinges, each having a minimum 1/4" (6mm) diameter Type 316 stainless steel pin, shall be provided and shall pivot so the cover does not protrude into the channel frame.

b. Cover shall be equipped with a hold open arm which automatically locks the cover in the open position.

c. Cover shall be fitted with the required number and size of compression spring operators. Springs and spring tubs shall be Type 316 stainless steel.

d. A Type 316 stainless steel snap lock with fixed handle shall be mounted on the underside of the cover.

e. Hardware: Shall be Type 316 stainless steel throughout.

f. Finishes: Factory finish shall be mill finish aluminum with bituminous coating applied to the exterior of the frame.

PART 3 - EXECUTION

3.1 EXECUTION:

A. ACCESS MANHOLE AND COVER (UTILITY)

1. Comply with CSI Section 033000, “Cast-in-Place Concrete” for all applicable materials.

2. Installation of Steel Access Hatch Cover:

a. Examination: Examine substrates and openings for compliance with requirements for installation tolerances and other conditions affecting performance. Proceed with installation only after unsatisfactory conditions have been corrected.
b. Installation: Install products in strict accordance with manufacturer’s instructions and approved submittals. Locate units level, plumb, and in proper alignment with adjacent work. Test units for proper function and adjust until proper operation is achieved. Repair finishes damaged during installation. Restore finishes so no evidence remains of corrective work.
c. Adjusting and Cleaning: Clean exposed surfaces using methods acceptable to the manufacturer which will not damage finish.

END OF SECTION 307000

SECTION 260519 – LOW-VOLTAGE ELECTRICAL POWER CONDUCTORS AND CABLES

PART 1 - GENERAL

1.1 SUMMARY:

A. This Section includes building wires and cables and associated connectors, splices, and terminations for wiring systems rated 600 V and less.

B. This Section also includes communication conductors.

C. Related CSI Sections: The following sections contain requirements that relate to this Section:

1. Division 26 Section 260533 “Raceways and Boxes for Electrical Systems”.
2. Division 26 Section 260543 “Underground Ducts and Raceways for Electrical Systems”.

1.2 SUBMITTALS:

A. Submit the following in accordance with Form 816 Article 1.20 – 1.05.02 and NOTICE TO CONTRACTOR – SUBMITTALS.

B. Product Data: For the following products:

1. 600 volt insulated wires and cables, all sizes
2. Communication conductors
3. All terminals, lugs and wire connectors

C. Quality Assurance Submittals

1. Manufacturer Certification Letter in accordance with NOTICE TO CONTRACTOR – POTENTIAL FOR ASBESTOS CONTAINING MATERIALS.

1.3 QUALITY ASSURANCE:

A. Testing Agency Qualifications: Testing shall be performed by an independent testing agency as defined by OSHA in 29 CFR 1910.7 or a member company of the NETA and that is acceptable to authorities having jurisdiction.

1. Testing Agency's Field Supervisor: Person currently certified by the NETA or the NICET to supervise on-site testing specified in Part 3.

B. Electrical Components, Devices, and Accessories: Listed and labeled as defined in NFPA 70, Article 100, by a testing agency acceptable to authorities having jurisdiction, and marked for intended use.

C. Comply with NFPA 70.

1.4 DELIVERY, STORAGE, AND HANDLING:

A. Deliver wires and cables according to NEMA WC 26.

1.5 COORDINATION:

A. Coordinate layout and installation of cables with other installations.

B. Revise locations and elevations from those indicated, as required to suit field conditions and as approved by Engineer.

PART 2 - PRODUCTS

2.1 MANUFACTURERS:

A. Available Manufacturers: Subject to compliance with requirements, manufacturers offering products that may be incorporated into the Work include, but are not limited to, the following:

1. Wires and Cables:

a. Alcan Aluminum Corporation; Alcan Cable Div.
b. American Insulated Wire Corp.; Leviton Manufacturing Co.
c. Southwire Company
d. Carol Cable Co., Inc.
e. Belden

2. Multi taps and connectors for wires and cables:

a. Hubbell Power Systems, Inc.
b. 3M; Electrical Products Division
c. Grainger
d. Square D Co.; Anderson.

2.2 BUILDING WIRES AND CABLES:

A. UL-listed building wires and cables with conductor material, insulation type, cable construction, and rating as specified in Part 3.2 "Wire and Insulation Applications".

B. Rubber Insulation Material: Comply with NEMA WC 3.

C. Thermoplastic Insulation Material: Comply with NEMA WC 5.

D. Conductor Material: Copper.

E. Stranding: All wires shall be stranded.

F. General:

1. The Contract Plans show the locations, type, size and number of wires and cables to be used for this Contract. Each type shall comply with the Specifications contained herein.
2. Cables which have been manufactured more than two years prior to installation will not be accepted.
3. The conductors, unless otherwise noted, shall be soft or annealed copper conforming to ANSI/ASTM B 33 if coated, ANSI/ASTM B 3 if uncoated. In addition, unless otherwise specified, stranded conductors shall have concentric stranding as per ANSI/ASTM B 8.
4. Cables shall be supplied with both ends of each length sealed against the entry of moisture.

G. 600 Volt Insulated Wires and Cables:

1. General:

a. Power, instrumentation, grounding, and control cable shall be approved for use in wet or dry locations, indoors or outdoors in raceway, wireways, trenches, conduits, underground ducts.
b. Asbestos, in any form, is prohibited from the cable. This prohibition includes such items as fillers and binding tapes even though the item is encapsulated, or the asbestos fibers are impregnated with binder material.
c. All conductors shall be copper, insulated, 600 Volt, unless otherwise noted. Wire size No.8 and smaller shall be type THHN-THWN, unless otherwise noted or shown; wire size No. 6 AWG and larger shall be type THWN or XHHW.
d. Conductors with higher insulation temperature rating shall be provided as required. Conductors shall be rated and of a type approved for the specific application.
e. All conductors shall be installed in raceways Refer to CSI Division 26 Section 260533 "Raceways and Boxes for Electrical Systems" and CSI Division 26 Section 260543 "Underground Ducts and Raceways for Electrical Systems."

f. Conductor and conduit sizes shown on the drawings are based on copper conductors with Type THHN-THWN or XHHW insulation, unless otherwise noted. Increase conductor and conduit sizes as necessary for other approved insulation types.

g. Aluminum is not approved for conductors or wire.

h. Power conductors shall be a minimum of No. 12 AWG stranded unless otherwise noted. All wire shall be stranded unless otherwise noted. Control conductors shall be a minimum of No. 14 AWG stranded, unless otherwise noted.

i. When the distance from the panel to the first outlet on a 20 Amp 120 Volt circuit exceeds 100 feet and on a 20 Amp 240 Volt circuit exceeds 200 feet, the conductor shall be increased to No. 10 AWG.

j. Wires, conductors, and cables shall be single conductor, except as otherwise specified or indicated on drawings.

k. Cable meeting special requirements such as twisted pairs, triads, or individual shielding shall be provided where recommended by the system manufacturer.

l. Conductor insulation shall be color coded.

208/120 Volt		240/120 Volt	
Phase A	Black	Phase A	Black
Phase B	Red	Phase B	Red
Phase C	Blue		
Neutral	White	Neutral	White
Ground	Green	Ground	Green

m. Switch leg wiring shall be of the same color code as the corresponding phase.

n. System color coding shall be in accordance with color code furnished by system manufacturer and shown on wiring diagrams.

o. Colors, except colors for conductors No. 4 AWG and larger, shall be factory applied the entire length of the conductors by solid color compound, solid color coating, or colored striping or bands, 2 sets 180° apart. Onsite coloring shall not be done, except color coding by means of paint or tapes is approved only for conductors No. 4 AWG and larger.

p. Voltage rating, manufacturer, type and conductor AWG size indication shall be continuous, factory applied the entire length of each conductor.

q. Joints and splices shall be made in a manner equivalent electrically and mechanically to the conductor itself. Connections shall be of the pressure or compression type.

r. All lugs terminating feeder conductors shall be of the solderless type UL listed for use with copper wire. All lugs and terminals shall be UL listed for 90°C application.

s. Branch circuit connections or joints shall have an approved type solderless connector suitable for copper conductors.

t. Wire connectors shall consist of a phenolic compound body with a cone-shaped coil spring insert and threaded skirt. Outer shell shall be knurled for each grip and capable of use with a wrench or pliers.

H. Telephone Cable:

1. General:

a. Cabling between Tank Monitoring System and Fuel Master Unit (FMU); Cabling shall be installed in conduit. The cable shall be as follows:

1) Homerun shall be with no splices. Cable shall be shielded twisted pair cable, 4-conductor, #24 AWG, or per the manufacturer's recommendation.

b. Cabling between the patch panel and the emergency telephone located on the exterior of the building. The cable shall be as follows:

1) Cable shall be yellow. Homerun shall be with no splices. Cable shall be shielded twisted pair cable, Category 6.

c. All cabling shall be in full compliance with EIA/TIA-568B Commercial Building Telecommunications Standard and EIA/TIA-569B Commercial Building Standard for Telecommunications Pathways and Spaces.

d. Size of conductors and number of pairs shall be as shown on the Contract Plans and shall be per the system manufacturer's requirements if there is any conflict.

I. Network Cable

1. General:

a. Cabling between Fuel Master Unit and Data Panel; Cabling shall be installed in conduit. The cable shall be as follows:

1) Homerun shall be with no splices. Cable shall be shielded twisted pair cable, Category 6. The cable shall be suited for underground installation.
2) Spare cable shall be suited for underground installation.

b. Cabling between the Tank Monitoring System and the Data Panel: Cabling shall be installed in conduit. The cable shall be as follows:

1) Cable shall be yellow in color. Homerun shall be with no splices. Cable shall be twisted pair cable, Category 6.

c. All cabling shall be in full compliance with EIA/TIA-568B Commercial Building Telecommunications Standard and EIA/TIA-569B Commercial Building Standard for Telecommunications Pathways and Spaces.

d. Size of conductors and number of pairs shall be as shown on the Contract Plans and shall be per the system manufacturer's requirements if there is any conflict.

2.3 CONNECTORS AND SPLICES:

A. UL-listed, factory-fabricated wiring connectors of size, ampacity rating, material, type, and class for application and service indicated. Comply with Project's installation requirements and as specified in Part 3.2 "Wire and Insulation Applications".

PART 3 - EXECUTION

3.1 EXAMINATION:

A. Examine raceways and building finishes receiving wires and cables for compliance with requirements for installation tolerances and other conditions affecting performance of wires and cables. Do not proceed with installation until unsatisfactory conditions have been corrected.

3.2 WIRE AND INSULATION APPLICATIONS:

A. Service Entrance: Type RHW or THWN, in raceway.

B. Feeders: Type THHN/THWN, in raceway.

C. Branch Circuits: Type THHN/THWN, in raceway.

D. Fire Alarm Circuits: Power-limited, fire-protective, signaling circuit cable.

E. Class 1 Control Circuits: Type THHN/THWN, in raceway.

F. Class 2 Control Circuits: Power-limited cable, concealed in building finishes.

3.3 INSTALLATION:

A. All conductors shall be installed in metal raceways, RGSC, EMT, PVC, and FMC in accordance with the NEC except where specifically noted otherwise.

B. Terminals shall be arranged phase A-B or 1-2 from left to right, top to bottom, and front to back.

C. Branch circuit phase wires shall be connected to separate phases of supply mains to assure balanced condition in that circuit and proper load balance on the panel. Circuit numbers assigned on drawings are used for convenience and need not necessarily designate the circuit on the panel to which that circuit may be connected. Actual circuiting shall suit job conditions.

D. Equipment requiring electric service is also named on the drawings or schedules of other disciplines, or in other Sections. Where receptacles or convenience outlets are specified to serve named equipment, the Contractor shall provide approved receptacle, plug, connection, and conduit to equipment.

E. Drawings do not necessarily indicate the required number of conductors in each raceway. Unless it is specifically noted that raceways are empty by the word "spare", the Contractor shall provide all required conductors, power, control, supervisory, alarm, or branch circuits. The Contractor shall make all final connections, flexible or fixed, as required, to all equipment requiring final electrical connections.

F. Regardless of the number of conductors shown, each circuit (conductors No. 8 and smaller) to panels or equipment shall contain a full size neutral conductor, which, if not utilized, shall be taped and insulated at the final point of connection to equipment.

G. All grounding conductors shall have green color coded insulation and shall be sized in accordance with the NEC.

H. Install wires and cables as indicated, according to manufacturer's written instructions and NECA's "Standard of Installation."

I. Pull Conductors: Use manufacturer-approved pulling compound or lubricant where necessary; compound used must not deteriorate conductor or insulation. Do not exceed manufacturer's recommended maximum pulling tensions and sidewall pressure values.

J. Use pulling means; including fish tape, cable, rope, and basket-weave wire/cable grips, which will not damage cables or raceway.

K. Support cables in conduit according to CSI Division 26 Section 260529, "Hangers and Supports for Electrical Systems."

L. Identify wires and cables according to CSI Division 26 Section 260553, "Identification for Electrical Systems."

3.4 CONNECTIONS:

A. Conductor Splices: Keep to minimum.

B. Install splices and taps that possess equivalent or better mechanical strength and insulation ratings than conductors being spliced.

C. Wiring at Outlets: Install conductor at each outlet, with at least 12 inches of slack.

D. Connect outlets and components to wiring and to ground as indicated and instructed by manufacturer.

E. Tighten electrical connectors and terminals according to manufacturer's published torque-tightening values. If manufacturer's torque values are not indicated, use those specified in UL 486A and UL 486B.

3.5 FIELD QUALITY CONTROL:

A. Testing: Testing and inspections shall be performed by an independent testing agency. On installation of wires and cables and before electrical circuitry has been energized, demonstrate product capability and compliance with requirements.

1. Procedures: Perform each visual and mechanical inspection and electrical test stated in NETA Acceptance Testing Specification. Certify compliance with test parameters.

2. Measure insulation resistance phase-to-phase and phase-to-ground with insulation-resistance tester. Use test voltages and procedure recommended by manufacturer. Comply with manufacturer's specified minimum resistance.

   a. Check for electrical continuity of circuits and for short circuits.
   b. Inspect for physical damage, proper installation and connection, and integrity of barriers, covers, and safety features.

3. Ground-Fault Tests: Coordinate with testing of ground-fault protective devices for power delivery from both sources.

   a. Verify grounding connections.

B. Correct malfunctioning conductors and cables at Project Site, where possible, and retest to demonstrate compliance; otherwise, remove and replace with new conductors and retest.

C. Reports of the inspections and testing shall be submitted to the engineer.

END OF SECTION 260519

SECTION 260526 – GROUNDING AND BONDING FOR ELECTRICAL SYSTEMS

PART 1 - GENERAL

1.1 SUMMARY:

A. This Section includes grounding of electrical systems and equipment. Grounding requirements specified in this Section may be supplemented by special requirements of systems described in other Sections.

B. Related CSI Sections include the following:

1. Division 26 Section 260543, "Underground Ducts and Raceways for Electrical Systems".

2. Division 26 Section 260533, “Raceways and Boxes for Electrical Systems”.

3. Division 26 Section 260519, “Low-voltage Electrical Power Conductors and Cables”.

C. System grounding shall be as shown on the plans. All grounding conductors incorporated to the existing system shall be approved by the Engineer.

1.2 SUBMITTALS:

A. Submit the following in accordance with Form 816 Article 1.20-1.05.02 and NOTICE TO CONTRACTOR – SUBMITTALS.

B. Product Data: For the following:

1. Ground rods.
2. Hardware including clamps, connectors, etc.

C. Qualification Data: For firms and persons specified in Part 1.3, "Quality Assurance".

D. Field Test Reports: Submit written test reports to include the following:

1. Test procedures used.
2. Test results that comply with requirements.
3. Results of failed tests and corrective action taken to achieve test results that comply with requirements.

1.3 QUALITY ASSURANCE:

A. Testing Agency Qualifications: Testing shall be performed by an independent testing agency as defined by OSHA in 29 CFR 1910.7 or a member company of the NETA and that is acceptable to authorities having jurisdiction.

1. Testing Agency's Field Supervisor: Person currently certified by the NETA to supervise on-site testing specified in Part 3.

B. Electrical Components, Devices, and Accessories: Listed and labeled as defined in NFPA 70, Article 100, by a testing agency acceptable to authorities having jurisdiction, and marked for intended use.

1. Comply with UL 467 for grounding and bonding materials and equipment.

PART 2 - PRODUCTS

2.1 MANUFACTURERS:

A. Available Manufacturers: Subject to compliance with requirements, manufacturers offering products that may be incorporated into the Work include, but are not limited to, the following:

2. Grounding Conductors, Cables, Connectors, and Rods:

a. Galvan Industries, Inc.
b. Lightning Master Corp.
c. Salisbury: W.H. Salisbury & Co., Utility
d. Thomas & Betts, Electrical.

2.2 GROUNDING CONDUCTORS:

A. Ground Cable: annealed concentric stranded, copper cable the size shown on the plans and in accordance with ASTM 8 and Article 250 of the NEC. For insulated conductors, comply with CSI Division 26 Section 260519, "Low-Voltage Electrical Power Conductors and Cables".

B. Material: Copper.

C. Equipment Grounding Conductors: Insulated with green-colored insulation.

D. Intrinsically Safe Ground Conductors: Insulated with green-colored insulation with yellow stripe. On feeders with isolated ground, use colored tape, alternating bands of green and yellow tape to provide a minimum of three bands of green and two bands of yellow.

E. Grounding Electrode Conductors: Annealed, concentric stranded, copper cable sized in accordance with ASTM B 8 and Article 250 of the NEC.

F Underground Conductors shall be bare, tinned, stranded, unless otherwise indicated.

G Bare Copper Conductors: Comply with the following:

1. Assembly of Stranded Conductors: ASTM B 8.

H Copper bonding Conductors: As follows:

1. Bonding Cable: 28 kcmil, 14 strands of No. 17 AWG copper conductor, 1/4 inch in diameter.
2. Bonding Conductor: No. 4 or No. 6 AWG, stranded copper conductor.
3. Bonding Jumper: Bare copper tape, braided bare copper conductors, terminated with copper ferrules; 1-5/8 inches wide and 1/16 inch thick.

I Grounding Bus: Bare, annealed copper bars of rectangular cross section, with insulators.

2.3 CONNECTOR PRODUCTS:

A. Comply with IEEE 837 and UL 467; listed for use for specific types, sizes, and combinations of conductors and connected items.

B. Bolted Connectors: Bolted-pressure-type connectors, or compression type.

C. Welded Connectors: Exothermic-welded type, in kit form, and selected per manufacturer's written instructions. Below–grade (embedded or buried) copper grounding cable connections shall be made by exothermic welding. Exothermic welded connectors shall be Erico products Company, Cadweld or approved equal. Bolted connectors shall be of the types shown on the plans and shall be used for above ground connection only. Connections to stainless steel cables shall be welded.

D. Compression Type Cable Connectors: Shall be the heavy duty, cast-copper-alloy type, compressed by precision dies and shall have a current-carrying capacity at least equal to that of the copper cable with which they are used. Tooling shall be made by the same manufacturer as the connectors. Compression type connectors shall be Thomas and Betts type 53050 and 53065-58GR, or approved equal.

2.4 GROUNDING ELECTRODES:

A. Ground Rods: Ground Rods: Shall be pointed, copper-clad steel, 3/4-inch in diameter and ten feet long (minimum) or as shown on plans.

1. Size: 3/4 by 120 inches.

PART 3 - EXECUTION

3.1 APPLICATION:

A. All electrical equipment enclosures and equipment, and all metallic parts of the installation, including metallic conduits, wireways shall be bonded and connected to the nearest ground cable, whether shown on the Plans or not. Use only copper conductors for both insulated and bare grounding conductors in direct contact with earth, concrete, masonry, crushed stone and similar materials.

B. In raceways, use insulated equipment grounding conductors. The electrical continuity of wireways, air ducts, fence, enclosures, and handrails shall be maintained by bonding. Bonding of electrical raceway and enclosures shall assure electrical continuity and the capacity to conduct safety and fault current that could be imposed. Bonding shall comply fully with Article 250 of the NEC.

C. Exothermic-Welded Connections: Use for connections for underground connections. Grounding connections shall be made in accordance with the Contract and as specified. Paint, scale, rust, corrosion, and other foreign matter shall be removed from the points of contact on metal surfaces before ground connections are made.

D. Ground tap connections to equipment shall be made at the points provided on the equipment for grounding in accordance with the equipment manufacturer's recommendations. Connections from ground conductors to the ground bars of panelboards and other cabinet-mounted equipment shall be made by means of an acceptable bolted fitting.

E. All electrical power apparatus shall be provided with a ground-fault-current return path. Motors and power receptacles shall utilize a grounded, identified separate grounding conductor in the feeder or branch circuit raceway which connects the motor frame or receptacle to the panelboard ground bus.

F. All electrical power equipment shall be provided with an identified grounding conductor, including rigid steel conduit in accordance with NEC 344, is used for the raceway.

G. The Grounding conductor shall in no case be a system neutral or a current-carrying conductor. Where a circuit consists of two or more power conductors in a conduit or wiring channel, the grounding conductor may be one standard wire size smaller than the power conductor, but in no case smaller than No. 14 nor larger than No. 4/0, and shall be stranded and covered by green insulation. In all cases, the white insulated wire shall be used for the current-carrying neutral only.

H. Metallic sheaths or shields of shielded cable for power and control shall be terminated by a copper grounding strip provided with a connector for connection to

the station ground. The manufacturer of the cable shall furnish instructions for ground termination of shielded cable.

3.2 EQUIPMENT GROUNDING CONDUCTORS:

A. Comply with NFPA 70, Article 250, for types, sizes, and quantities of equipment grounding conductors, unless specific types, larger sizes, or more conductors than required by NFPA 70 are indicated.

B. Install equipment grounding conductors in all feeders and circuits.

C. Install insulated equipment grounding conductor with circuit conductors for the following items, in addition to those required by NEC:

1. Feeders and branch circuits.
2. Receptacle circuits.
3. Single-phase motor and appliance branch circuits

D. Busway Supply Circuits: Install insulated equipment grounding conductor from the grounding bus in the switchgear, switchboard, or distribution panel to equipment grounding bar terminal on busway.

E. Computer Outlet Circuits: Install insulated equipment grounding conductor in branch-circuit runs from computer-area power panels or power-distribution units.

F. Nonmetallic Raceways: Install an equipment grounding conductor in nonmetallic raceways unless they are designated for telephone or data cables.

G. Common Ground Bonding: Use bonding conductor sized same as system grounding electrode conductor, and install in conduit.

1. Use bonding conductor sized the same as system grounding electrode conductor, and install in conduit.

H. Metal Poles Supporting Outdoor Lighting Fixtures: Provide a grounding electrode in addition to installing a separate equipment grounding conductor with supply branch-circuit conductors.

I. Provide lightning protection/grounding for AST. Refer to specification 132160. All metallic parts shall be bonded with a #4 AWG bare copper stranded conductor connected to #4/0 AWG bare copper stranded grounding ring using exothermic welds. Grounding rods connected to grounding ring using exothermic welds.

3.3 INSTALLATION:

A. All grounding electrodes shall be bonded together to form the grounding electrode system.

B. Ground Rods: Install at least two rods spaced at least one-rod length from each other and located at least the same distance from other grounding electrodes.

1. Drive ground rods until tops are 6 inches below finished floor or final grade, unless otherwise indicated.
2. Interconnect ground rods with grounding electrode conductors. Use exothermic welds, except as otherwise indicated. Make connections without exposing steel or damaging copper coating.

C. Grounding Conductors: Route along shortest and straightest paths possible, unless otherwise indicated. Avoid obstructing access or placing conductors where they may be subjected to strain, impact, or damage.

D. Bonding Straps and Jumpers: Install so vibration by equipment mounted on vibration isolation hangers and supports is not transmitted to rigidly mounted equipment. Use exothermic-welded connectors for outdoor locations, unless a disconnect-type connection is required; then, use a bolted clamp. Bond straps directly to the basic structure taking care not to penetrate any adjacent parts. Install straps only in locations accessible for maintenance.

E. Bond interior metal piping systems and metal air ducts to equipment grounding conductors of associated pums, fans, blowers, electric heaters, and air cleaners. Use braided-type bonding straps.

F. Grounding and Bonding of Piping: Bond each aboveground portion of gas piping system downstream from equipment shutoff valve. Use braided-type bonding straps.

3.4 CONNECTIONS:

A. General: Make connections so galvanic action or electrolysis possibility is minimized. Select connectors, connection hardware, conductors, and connection methods so metals in direct contact will be galvanically compatible.

1. Use electroplated or hot-tin-coated materials to ensure high conductivity and to make contact points closer to order of galvanic series.
2. Make connections with clean, bare metal at points of contact.
3. Make aluminum-to-steel connections with stainless-steel separators and mechanical clamps.
4. Make aluminum-to-galvanized steel connections with tin-plated copper jumpers and mechanical clamps.

5. Coat and seal connections having dissimilar metals with inert material to prevent future penetration of moisture to contact surfaces.

B. Exothermic-Welded Connections: Comply with manufacturer's written instructions. Welds that are puffed up or that show convex surfaces indicating improper cleaning are not acceptable.

C. Equipment Grounding Conductor Terminations: For No. 8 AWG and larger, use pressure-type grounding lugs. No. 10 AWG and smaller grounding conductors may be terminated with winged pressure-type connectors.

D. Noncontact Metal Raceway Terminations: If metallic raceways terminate at metal housings without mechanical and electrical connection to housing, terminate each conduit with a grounding bushing. Connect grounding bushings with a bare grounding conductor to grounding bus or terminal in housing. Bond electrically noncontinuous conduits at entrances and exits with grounding bushings and bare grounding conductors, unless otherwise indicated.

E. Tighten screws and bolts for grounding and bonding connectors and terminals according to manufacturer's published torque-tightening values. Compression-Type Connections: Use hydraulic compression tools to provide correct circumferential pressure for compression connectors. Use tools and dies recommended by connector manufacturer. Provide embossing die code or other standard method to make a visible indication that a connector has been adequately compressed on grounding conductor.

F. Moisture Protection: If insulated grounding conductors are connected to ground rods or grounding buses, insulate entire area of connection and seal against moisture penetration of insulation and cable.

END OF SECTION 260526

SECTION 260529 - HANGERS AND SUPPORTS FOR ELECTRICAL SYSTEMS

PART 1 - GENERAL

1.1 SUMMARY:

A. This Section includes the following:

1. Hangers and supports for electrical equipment and systems.

1.2 PERFORMANCE REQUIREMENTS:

A. Delegated Design: Design supports for multiple raceways, including comprehensive engineering analysis by a qualified professional engineer, using performance requirements and design criteria indicated.

B. Design supports for multiple raceways capable of supporting combined weight of supported systems and its contents.

C. Design equipment supports capable of supporting combined operating weight of supported equipment and connected systems and components.

1.3 SUBMITTALS:

A. Submit the following in accordance with Form 816 Article 1.20-1.05.02 and NOTICE TO CONTRACTOR – SUBMITTALS.

B. Product Data: For the following:

1. Steel slotted support systems.

C. Shop Drawings: For the following:

1. Trapeze hangers.
2. Steel slotted channel systems.
3. Equipment supports.
4. Hardware.

D. Welding certificates.

1.4 QUALITY ASSURANCE:

A. Welding: Qualify procedures and personnel according to AWS D1.1/D1.1M, "Structural Welding Code - Steel."

B. Comply with NFPA 70.

PART 2 - PRODUCTS

2.1 SUPPORT, ANCHORAGE, AND ATTACHMENT COMPONENTS:

A. Steel Slotted Support Systems and C-channels: Comply with MFMA-4, factory-fabricated components for field assembly.

1. Available Manufacturers: Subject to compliance with requirements, manufacturers offering products that may be incorporated into the Work include, but are not limited to, the following:

a. Allied Tube & Conduit.
b. Cooper B-Line, Inc.; a division of Cooper Industries.
c. ERICO International Corporation.
d. Thomas & Betts Corporation.

2. Metallic Coatings: Hot-dip galvanized after fabrication and applied according to MFMA-4. Stainless steel for corrosive areas.
3. Channel Dimensions: Selected for applicable load criteria.

B. Raceway and Cable Supports: As described in NECA 1 and NECA 101.

C. Conduit and Cable Support Devices: Steel hangers, clamps, and associated fittings, designed for types and sizes of raceway or cable to be supported. PVC coated or Stainless steel required for corrosive locations.

D. Support for Conductors in Vertical Conduit: Factory-fabricated assembly consisting of threaded body and insulating wedging plug or plugs for non-armored electrical conductors or cables in riser conduits. Plugs shall have number, size, and shape of conductor gripping pieces as required to suit individual conductors or cables supported. Body shall be malleable iron. Provide stainless steel supports for conduit installed in corrosive areas.

E. Structural Steel for Fabricated Supports and Restraints: ASTM A 36/A 36M, steel plates, shapes, and bars; black and galvanized.

F. Mounting, Anchoring, and Attachment Components: Items for fastening electrical items or their supports to building surfaces include the following:

1. Powder-Actuated Fasteners: Threaded-steel stud, for use in hardened portland cement concrete, steel, or wood, with tension, shear, and pullout capacities appropriate for supported loads and building materials where used.

a. Available Manufacturers: Subject to compliance with requirements, manufacturers offering products that may be incorporated into the Work include, but are not limited to, the following:

1) Hilti Inc.
2) ITW Ramset/Red Head; a division of Illinois Tool Works, Inc.
3) MKT Fastening, LLC.

2. Mechanical-Expansion Anchors: Insert-wedge-type, stainless steel, for use in hardened Portland cement concrete with tension, shear, and pullout capacities appropriate for supported loads and building materials in which used.

a. Available Manufacturers: Subject to compliance with requirements, manufacturers offering products that may be incorporated into the Work include, but are not limited to, the following:

1) Hilti Inc.
2) ITW Ramset/Red Head; a division of Illinois Tool Works, Inc.
3) MKT Fastening, LLC.

3. Concrete Inserts: Steel or malleable-iron, slotted support system units similar to MSS Type 18; complying with MFMA-4 or MSS SP-58.
4. Clamps for Attachment to Steel Structural Elements: MSS SP-58, type suitable for attached structural element.
5. Through Bolts: Structural type, hex head, and high strength. Comply with ASTM A 325.
6. Toggle Bolts: All-steel springhead type.
7. Hanger Rods: Threaded steel.

G. Hardware: For corrosive areas and wet locations all hardware shall be stainless steel. For all other areas use zinc plated hardware.

PART 3 - EXECUTION

3.1 APPLICATION:

A. Comply with NECA 1 and NECA 101 for application of hangers and supports for electrical equipment and systems except if requirements in this Section are stricter.

B. Maximum Support Spacing and Minimum Hanger Rod Size for Raceway: Space supports for EMT, and RGSC as required by scheduled in NECA 1, where its Table 1 lists maximum spacings less than stated in NFPA 70. Minimum rod size shall be 1/4 inch in diameter.

C. Multiple Raceways or Cables: Install trapeze-type supports fabricated with steel slotted or other support system, sized so capacity can be increased by at least 25 percent in future without exceeding specified design load limits.

1. Secure raceways and cables to these supports with two-bolt conduit clamps or approved clamps.

D. Spring-steel clamps designed for supporting single conduits without bolts may be used for 1-1/2-inch and smaller raceways serving branch circuits and communication systems above suspended ceilings and for fastening raceways to trapeze supports.

3.2 SUPPORT INSTALLATION:

A. Comply with NECA 1 and NECA 101 for installation requirements except as specified herein.

B. Raceway Support Methods: In addition to methods described in NECA 1, EMT and RGSC may be supported by openings through structure members, as permitted in NFPA 70.

C. Strength of Support Assemblies: Where not indicated, select sizes of components so strength will be adequate to carry present and future static loads within specified loading limits. Minimum static design load used for strength determination shall be weight of supported components plus 200 lb.

D. Mounting and Anchorage of Surface-Mounted Equipment and Components: Anchor and fasten electrical items and their supports to building structural elements by the following methods unless otherwise indicated by code:

1. To Wood: Fasten with lag screws or through bolts.
2. To New Concrete: Bolt to concrete inserts.
3. To Masonry: Approved toggle-type bolts on hollow masonry units and expansion anchor fasteners on solid masonry units.
4. To Existing Concrete: Expansion anchor fasteners.
5. Instead of expansion anchors, powder-actuated driven threaded studs provided with lock washers and nuts may be used in existing standard-weight concrete 4 inches thick or greater. Do not use for anchorage to lightweight-aggregate concrete or for slabs less than 4 inches thick.
6. To Steel: Welded threaded studs complying with AWS D1.1/D1.1M, with lock washers and nuts. Or Beam clamps (MSS Type 19, 21, 23, 25, or 27) complying with MSS SP-69.
7. To Light Steel: Sheet metal screws.
8. Items Mounted on Hollow Walls and Nonstructural Building Surfaces: Mount cabinets, panelboards, disconnect switches, control enclosures, pull and junction boxes, transformers, and other devices on slotted-channel racks attached to substrate by means that meet seismic-restraint strength and anchorage requirements.

E. Drill holes for expansion anchors in concrete at locations and to depths that avoid reinforcing bars.

END OF SECTION 260529

SECTION 260533 - RACEWAYS AND BOXES FOR ELECTRICAL SYSTEMS

PART 1 - GENERAL

1.1 SUMMARY:

A. Section Includes:

1. Raceways include the following:

a. RGSC
b. EMT above 10’ elevation in bays, Electrical Room, Mechanical Room, Office of the maintenance facility.
c. PVC schedule 80 conduits for conduit below grade.
d. FMC.
e. LFMC.
f. Wireways.

2. Boxes, enclosures, and cabinets include the following:

a. Device boxes.
b. Outlet boxes.
c. Pull and junction boxes.
d. Cabinets and hinged-cover enclosures.
f. Explosion proof fittings.

B. Related CSI Sections include the following:

1. Division 26 Section 260544, "Sleeves and Sleeve Seals for Electrical Raceways and Cabling"
2. Division 26 Section 260543, “Underground Ducts and Raceways for Electrical Systems”
3. Division 26 Section 262726, "Wiring Devices"

1.2 DEFINITIONS:

1. EMT: Electrical metallic tubing.
2. FMC: Flexible metal conduit.
3. RGSC: Rigid galvanized metal conduit.
4. LFMC: Liquidtight flexible nonmetallic conduit.
5. PVC: Polyvinyl chloride conduit.

1.3 SUBMITTALS:

A. Submit the following in accordance with Form 816 Article 1.20 -1.05.02 and NOTICE TO CONTRACTOR – SUBMITTALS.

B. Product Data: For surface raceways, wireways and fittings, hinged-cover enclosures, and cabinets.

C. Shop Drawings: For the following raceways components. Include plans, elevations, sections, details, and attachments to other work.

1. Custom enclosures and cabinets.
2. For boxes, including the following:

a. Conduit entry provisions, including locations and conduit sizes
b. Box cover design
c. Grounding details
d. Dimensioned locations of cable rack inserts, and pulling-in and lifting irons
e. Joint details

1.4 QUALITY ASSURANCE:

A. Listing and Labeling: Provide raceways and boxes specified in this Section that are listed and labeled.

1. The Terms "Listed" and "Labeled": As defined in NFPA 70, Article 100.

B. Comply with NEC's "Standard of Installation."

C. Comply with NFPA 70.

1.5 COORDINATION:

A. Coordinate layout and installation of raceways and boxes with other construction elements to ensure adequate headroom, working clearance, and access.

PART 2 - PRODUCTS

2.1 MANUFACTURERS:

A. Available Manufacturers: Subject to compliance with requirements, manufacturers offering products that may be incorporated into the Work include, but are not limited to, the following:

1. Metal Conduit and Tubing:

a. Alflex Corp.
b. Anamet, Inc.; Anaconda Metal Hose.
c. Anixter Brothers, Inc.

2. Conduit Bodies and Fittings:

a. American Electric; Construction Materials Group.
b. Crouse-Hinds; Div. of Cooper Industries.
c. Emerson Electric Co.; Appleton Electric Co.

3. Metal Wireways:

a. Hoffman Engineering Co.
b. Keystone/Rees, Inc.
c. Square D Co.

4. Boxes, Enclosures, and Cabinets:

a. American Electric; FL Industries.
b. Butler Manufacturing Co.; Walker Division.
c. Crouse-Hinds; Div. of Cooper Industries.

2.2 CONDUIT AND TUBING:

A. RGSC: ANSI C80.1. Fittings: threaded type.

B. EMT and Fittings: ANSI C80.3. Fittings: Set-screw or compression type. Cast fittings shall be made of steel or malleable iron, hot-dip galvanized finish.

C. FMC: Zinc-coated steel.

D. LFMC: Flexible steel conduit with PVC jacket.

E. RNC: PVC Schedule 80 Nonmetallic conduits, tubing, and fittings shall be listed and labeled as defined in NFPA 70, by a qualified testing agency, and marked for intended location and application. Shall comply with NEMA TC 2 and UL 651 unless otherwise indicated.

F. Fittings/conduit bodies for Metallic Conduit: Comply with NEMA FB 1 and UL 514B; match conduit/tubing materials. Cast fittings shall be made of steel or malleable iron, hot-dip galvanized finish. Covers for conduit bodies installed in wet locations shall be gasketed.

G. Fittings/Conduit bodies RNC: Comply with NEMA TC 3; match to conduit or tubing type and material.

H. Explosion Proof Fittings: Conduit Fittings for Hazardous (Classified) Locations: Comply with UL 886 and NFPA 70. Threaded, recessed-type, close-up plugs. Screwdriver slotted close-up plugs shall not be accepted. Fittings shall be made of malleable iron.

I. Solvent cements and adhesive primers shall have a VOC content of 510 and 550 g/L or less, respectively, when calculated according to 40 CFR 59, Subpart D (EPA Method 24).

2.3 METAL WIREWAYS:

A. Material: Sheet metal sized and shaped as indicated. The exterior installed wireways shall be NEMA-3R or stainless steel NEMA-4X as indicated on plans.

B. Fittings and Accessories: Include couplings, offsets, elbows, expansion joints, adapters, hold-down straps, end caps, and other fittings to match and mate with wireways as required for complete system.

C. Select features, unless otherwise indicated, as required to complete wiring system and to comply with NFPA 70.

D. Wireway Covers: Screw type cover for 3R and hinged type for 4X.

E. Finish: Manufacturer's standard enamel finish.

2.4 OUTLET AND DEVICE BOXES:

A. Sheet Metal Boxes: NEMA OS 1.

B. Steel-Metal Boxes: NEMA FB 1, Type FD, cast box with gasketed cover.

C. Nonmetallic Boxes: NEMA OS 2.

D. Boxes and fittings: Boxes and fittings shall comply with the applicable provisions of NFPA 70, Article 370.

E. All outlet and device boxes installed in the salt shed shall be of corrosive resistant type material.

2.5 PULL AND JUNCTION BOXES:

A. Small Sheet Metal Boxes: NEMA OS 1.

B. Cast-Metal Boxes: NEMA FB 1, steel with gasketed cover.

C. Non-metallic Boxes: NEMA OS 2 and UL 514C.

D. All pull and junction boxes installed in the salt shed shall be of corrosive resistant type material.

2.6 ENCLOSURES AND CABINETS:

A. Hinged-Cover Enclosures: NEMA 250, Type 1, with continuous hinge cover and flush latch.

1. Metal Enclosures: Steel, finished inside and out with manufacturer's standard enamel.

2. Nonmetallic Enclosures: Plastic finished inside with radio-frequency-resistant paint.

B. Cabinets: NEMA 250, Type 1, galvanized steel box, finished inside and out with manufacturer's standard enamel. Hinged door in front covers with flush latch and concealed hinge. Key latch to match panelboards. Include metal barriers to separate wiring of different systems and voltage, and include accessory feet where required for freestanding equipment.

PART 3 - EXECUTION

3.1 EXAMINATION:

A. Examine surfaces to receive raceways, boxes, enclosures, and cabinets for compliance with installation tolerances and other conditions affecting performance of raceways installation. Do not proceed with installation until unsatisfactory conditions have been corrected.

3.2 WIRING METHODS:

A. Indoors: Use the following wiring methods:

1. Office Areas: RGSC where exposed and EMT where concealed and above 10' elevation.
2. Damp locations: RGSC.
3. Mechanical Room, Bay area, Stores' area: RGSC up to 10' elevation, EMT over 10' elevation.
4. Temporary Installation: PVC Schedule 80.
5. Boxes and Enclosures: NEMA 250, Type 1, except as follows:

(a) Corrosive Locations: NEMA Type 4X, stainless steel.
(b) Damp or Wet Locations: NEMA 250, Type 4, nonmetallic, Raceways Fittings: Compatible with raceways and suitable for use and location.

6. Rigid Steel Conduit: Use threaded rigid steel conduit fittings, unless otherwise indicated.

3.3 INSTALLATION:

A. Install raceways, boxes, enclosures, and cabinets as indicated, according to manufacturer's written instructions, following NEC and local codes. Install conduit clamps within 3' of boxes and at 10' maximum distance between junction points.

B. Minimum Raceways Size: 3/4-inch trade size.

C. Conceal conduit and EMT, unless otherwise indicated, within finished walls and ceilings.

D. Keep raceways at least 6 inches away from parallel runs of flues and hot-water pipes. Install horizontal raceways runs above water and steam piping.

E. Install raceways level and square and at proper elevations. Provide adequate headroom.

F. Complete raceways installation before starting conductor installation.

G. Support raceways as specified in CSI Division 26 Section 260529, "Hangers and Supports for Electrical Systems."

H. Use temporary closures to prevent foreign matter from entering raceways.

I. Stub-ups shall be rigid conduit. Protect stub-ups from damage where conduits rise through floor slabs. Arrange so curved portion of bends is not visible above the finished slab.

J. Make bends and offsets so ID is not reduced. Keep legs of bends in the same plane and straight legs of offsets parallel, unless otherwise indicated.

K. Use raceways fittings compatible with raceways and suitable for use and location. For rigid steel conduit, use threaded rigid steel conduit fittings.

L. Run concealed raceways, with a minimum of bends, in the shortest practical distance considering the type of building construction and obstructions, unless otherwise indicated.

M. Install exposed raceways parallel or at right angles to nearby surfaces or structural members, and follow the surface contours as much as practical.

1. Run parallel or banked raceways together, on common supports where practical.
2. Make bends in parallel or banked runs from same centerline to make bends parallel. Use factory elbows only where elbows can be installed parallel; otherwise, provide field bends for parallel raceways.

N. Join raceways with fittings designed and approved for the purpose and make joints tight.

1. Make raceways terminations tight. Use bonding bushings or wedges at connections subject to vibration. Use bonding jumpers where joints cannot be made tight.
2. Use insulating bushings to protect conductors.

O. Tighten set screws of threadless fittings with suitable tools.

P. Terminations: Where raceways are terminated with locknuts and bushings, align raceways to enter squarely and install locknuts with dished part against the box. Where terminations are not secure with 1 locknut, use 2 locknuts: 1 inside and 1 outside the box.

Q. Where raceways are terminated with threaded hubs, screw raceways or fittings tightly into the hub so the end bears against the wire protection shoulder. Where chase nipples are used, align raceways so the coupling is square to the box and tighten the chase nipple so no threads are exposed.

R. Install pull wires in empty raceways. Use No. 14 AWG zinc-coated steel or monofilament plastic line with not less than 200-lb tensile strength. Leave at least 12 inches of slack at each end of the pull wire. Ends shall be capped.

S. Telephone and Signal System Raceways: 3/4-Inch trade size minimum: In addition to the above requirements, install raceways in maximum lengths of 150 feet and with a maximum of two 90-degree bends or equivalent. Separate lengths with pull or junction boxes where necessary to comply with these requirements.

T. Install raceways sealing fittings according to manufacturer's written instructions. Locate fittings at suitable, approved, and accessible locations and fill them with UL-listed sealing compound. For concealed raceways, install each fitting in a flush steel box with a blank cover plate having a finish similar to that of adjacent plates or surfaces. Install raceways sealing fittings at the following points:

1. Where otherwise required by NFPA 70.

U. Stub-up Connections: Extend rigid metal conduits through concrete floor for connection to freestanding equipment. Install with an adjustable top or coupling threaded inside for plugs set flush with the finished floor. Extend conductors to equipment with rigid steel conduit; FMC may be used 6 inches above the floor or where call on the plans.

V. Install hinged-cover enclosures and cabinets plumb. Support at each corner.

W. Conduits entering enclosures, other than threaded cast boxes, shall be securely fastened by means of two lock-nuts, one on each side of the enclosure. The conduit shall be terminated in a bushing. Conduit bushings made entirely of non-metallic materials shall not be used.

X. Do not leave any box openings exposed. Install hole plugs on any knockout holes that are removed without any conduit attached.

Y. Install boxes level and plumb and with orientation and depth coordinated with connecting conduits to minimize bends and deflections required for proper entrances.

Z. Unless otherwise indicated, support units on a level bed of crushed stone or gravel, graded from 1/2-inch sieve to No. 4 sieve and compacted to same density as adjacent undisturbed earth.

AA. Install removable hardware, including pulling eyes, cable stanchions, cable arms, and insulators, as required for installation and support of cables and conductors and as indicated. Select arm lengths to be long enough to provide spare space for future cables, but short enough to preserve adequate working clearances in the enclosure.

BB. Field-cut openings for conduits according to enclosure manufacturer's written instructions. Cut wall of enclosure with a tool designed for material to be cut. Size holes for terminating fittings to be used, and seal around penetrations after fittings are installed.

3.4 PROTECTION:

A. Provide final protection and maintain conditions, in a manner acceptable to manufacturer and Installer that ensure coatings, finishes, and cabinets are without damage or deterioration at the issuance of the Certificate of Compliance.

1. Repair damage to galvanized finishes with zinc-rich paint recommended by manufacturer.
2. Repair damage to PVC or paint finishes with matching touchup coating recommended by manufacturer.

3.5 CLEANING:

A. On completion of installation, including outlet fittings and devices, inspect exposed finish. Remove burrs, dirt, and construction debris and repair damaged finish, including chips, scratches, and abrasions.

END OF SECTION 260533

SECTION 260543 - UNDERGROUND DUCTS AND RACEWAYS FOR ELECTRICAL SYSTEMS

PART 1 - GENERAL

1.1 SUMMARY:

A. This section includes underground electrical work including the following:

1. Underground conduits and conduit accessories.

1.2 SUBMITTALS:

A. Submit the following in accordance with Form 816 Article 1.20-1.05.02 and NOTICE TO CONTRACTOR SUBMITTALS.

B. Product Data: For the following:

1. Underground conduits
2. Conduits and their accessories, including elbows, end bells, bends, fittings and solvent cement.

1.3 DEFINITIONS:

A. RGSC: Rigid galvanized steel conduit

B. RNC: Rigid nonmetallic conduit

1.4 QUALITY ASSURANCE:

A. Testing Agency Qualifications: Qualified according to ASTM E 329 for testing indicated.

B. Comply with ANSI C2.

C. Comply with NFPA 70.

PART 2 - PRODUCTS

2.1 CONDUIT:

A. Rigid Steel Conduit: Galvanized. Comply with ANSI C80.1.

B. RNC: NEMA TC2, Type EPC-80-PVC, UL 651, with matching fittings by same manufacturer as the conduit, complying with NEMA TC 3 and UL 514B.

2.2 RACEWAY/DUCT SEALING COMPOUND:

A. Compound: Nonhardening, putty-like consistency workable at temperatures as low as 35°F. Compound shall not slump at a temperature of 300°F and shall readily adhere to clean surfaces of plastic ducts, metallic conduits, conduit coatings, concrete, masonry, lead, cable sheaths, cable jackets, insulation materials, and the common metals. Compound shall have no injurious effect on worker's hands or materials.

2.3 TRENCHING AND BACKFILLING MATERIALS:

A. Form materials for this work for the encasement of conduit or cable, shall be bedding material, all of which passes a 3/8-inch sieve, and not more than 10% passes a No. 200 (75-micron) sieve. Topsoil, fertilizer, seed and mulch shall conform to Section M.13.

B. Backfill shall consist of satisfactory soil materials free of clay, rock or gravel larger than 2 inches in any dimension, debris, waste, frozen materials, vegetation and other deleterious matter. Satisfactory soil materials are defined as those complying with ASTM D2487 soil classification groups GW, GP, GM, SM, SW, and SP. Satisfactory material encountered during the excavation may be stored in segregated stockpile for re-use as backfill.

PART 3 - EXECUTION

3.1 UNDERGROUND CONDUITS:

A. All underground conduits shall contain a pull wire, Greenlee No. 430 Poly Pull Line or equal, approved by the Designer. Use PVC schedule 80 under grass and pavement. RGSC conduit shall be installed the last two feet as the conduit is routed to the fuel dispensers, underground tanks, lighting poles, and building stub-ups.

B. RGSC:

1. RGSC conduit shall be installed as shown on the contract plans. All metallic conduits shall be installed in accordance with manufacturer's instructions. Minimum size shall be ¾ inches.
2. Termination of conduits in handholes or other concrete structures shall be made with end bells.
3. All conduit runs shall leave or enter structures perpendicularly.

C. PVC:

1. PVC conduit shall be installed outside of building areas, under pavement to the Fuel Island and motor fuel. All nonmetallic conduits shall be installed in accordance with manufacturer's instructions. Minimum size shall be ¾ inches.
2. RGSC shall be used for the last two (2) feet of underground run to emergence or the point of connection to the aboveground raceway in accordance with NEC 514.8, Exception No. 2 and NEC 515.8(A).
3. All conduit runs shall leave or enter structures perpendicularly.

D. Elbows or bends shall be in accordance the NEC.

E. Transitions between conduits of different materials shall be made using the manufacturer's standard adapters.

F. Building Wall Penetrations: Rigid steel conduit. Use fittings manufactured for duct-to-conduit transition. Install conduit penetrations of building walls as specified in CSI Division 26 Section 260544, "Sleeves and Sleeve Seals for Electrical Raceways and Cabling."

G. Sealing: Provide temporary closure at terminations of ducts that have cables pulled. Seal spare ducts at terminations. Use sealing compound and plugs to withstand at least 15-psig hydrostatic pressure.

H. Pulling Cord: Install test Greenlee No. 430 Poly Pull Line nylon cord in conduits, including spares.

3.2 CONDUIT – CLEANING AND TESTING:

A. After conduits and accessories have been installed and all concreting operations, if any, completed, carefully clean and clear all conduit runs of all obstructions and foreign matter to the satisfaction of the Engineer.

B. Test conduits in the presence of the Engineer by pulling through each conduit 20 foot lengths of single conductor, Type THWN cable of the size and number given in the following table, or where called for, a flexible cylindrical mandrel having an outside diameter 1/4-inch less than the inside diameter of the conduit. Only nylon cable (no

rope) that will withstand a reasonable stress shall be used to pull the mandrel through the conduit system.

Conduit Size	Wire Size or Mandrel
2 inch	3 - 250 kcmil
3 inch and larger	Mandrel

3.3 GROUNDING:

A. Ground underground ducts according to CSI Division 26 Section 260526 "Grounding and Bonding for Electrical Systems."

3.4 EXCAVATION AND BACKFILL:

A. The trench shall be backfilled in at least two layers with excavated material not larger than 4 inches in diameter and thoroughly tamped and compacted to at least the density of the surrounding undisturbed soil. If necessary to obtain the desired compaction, the backfill material shall be moistened or aerated as required.

B. Where trenching occurs in riprap or crushed stone areas, the surface material shall be replaced in kind. Where trenching in paved areas, the trench shall be sawcut and backfilled to the depth of the surface required to replace the removed pavement structure, which shall then be replaced. The edges of all trenches in paved surfaces shall be sawcut to neat lines prior to repaving.

C. Trenches shall not be excessively wet and shall not contain pools of water during backfilling operations.

D. The trench shall be completely backfilled and tamped level with the adjacent surface: except that, when sod is to be placed over the trench, the backfilling shall be stopped at a depth equal to the thickness of the sod to be used, with proper allowance for settlement.

E. Any excess excavation material shall be removed and disposed of in accordance with instructions issued by the Engineer.

F. For ducts without concrete envelope, 8 inches of sand, soft earth, or other fine fill (loose measurement) shall be placed around the ducts and carefully tamped around and over them with hand tampers. The remaining trench may be filled with regular run of excavated material and thoroughly tamped as specified above.

G. Where sod has been removed, it shall be replaced as soon as possible after the backfilling is completed. All areas disturbed by the trenching, storing of dirt, cable laying, pad construction and other work shall be restored to its original condition. The restoration shall include any necessary topsoiling, fertilizing, liming, seeding, sprigging, or mulching. The Installer shall be held responsible for maintaining all disturbed surfaces and replacements until final acceptance.

3.5 FIELD QUALITY CONTROL:

A. Perform the following tests and inspections and prepare test reports:

1. Demonstrate capability and compliance with requirements on completion of installation of underground ducts and utility structures.
2. Pull aluminum or wood test mandrel through duct to prove joint integrity and test for out-of-round duct. Provide mandrel equal to 80 percent fill of duct. If obstructions are indicated, remove obstructions and retest.

B. Correct deficiencies and retest as specified above to demonstrate compliance.

3.6 CLEANING:

A. Pull leather-washer-type duct cleaner, with graduated washer sizes, through full length of ducts. Follow with rubber duct swab for final cleaning and to assist in spreading lubricant throughout ducts.

END OF SECTION 260543

SECTION 260544 – SLEEVES AND SLEEVE SEALS FOR ELECTRICAL RACEWAYS AND CABLING

PART 1 - GENERAL

1.1 SUMMARY:

A. Section Includes:

1. Sleeves for raceways
2. Sleeve-seal systems
3. Sleeve-seal fittings
4. Grout.
5. Silicon Sealants

1.2 DEFINITIONS:

A. EPDM: Ethylene-propylene-diene terpolymer rubber.

B. NBR: Acrylonitrile-butadiene rubber.

1.3 SUBMITTALS:

A. Submit the following in accordance with Form 816 Article 1.20-1.05.02 and NOTICE TO CONTRACTOR SUBMITTALS.

B. Product Data: For sleeve seals and silicon sealants.

C. Quality Assurance Submittals

1. Manufacturer Certification Letter in accordance with NOTICE TO CONTRACTOR – POTENTIAL FOR ASBESTOS CONTAINING MATERIALS.

1.4 COORDINATION:

A. Coordinate sleeve selection and application with selection and application of firestopping.

PART 2 - PRODUCTS

2.1 SLEEVES FOR RACEWAYS AND CABLES:

A. Steel Pipe Sleeves: ASTM A 53/A 53M, Type E, Grade B, Schedule 40, galvanized steel, plain ends.

B. Sleeves for Conduits penetrating Non-Fire-Rated Gypsum Board Assemblies: galvanized-steel sheet, 0.0239 inch minimum thickness; round tube closed with welded longitudinal joint, with tabs for screw-fastening the sleeve to the board.

C. Sleeves for Rectangular Openings: Galvanized sheet steel.

1. Minimum Metal Thickness:

a. For sleeve cross-section rectangle perimeter less than 50 inches and no side more than 16 inches, thickness shall be 0.052 inch.
b. For sleeve cross-section rectangle perimeter equal to, or more than, 50 inches and 1 or more sides equal to, or more than, 16 inches, thickness shall be 0.138 inch.

D. Coordinate sleeve selection and application of firestopping.

2.2 SLEEVE-SEAL SYSTEM:

A. Description: Modular sealing device, designed for field assembly, to fill annular space between sleeve and raceway or cable.

1. Manufacturers: Subject to compliance with requirements. Available manufacturers offering products that may be incorporated into the Work include, but are not limited to, the following:

a. Advance Products & Systems, Inc.
b. Calpico, Inc.
c. Metraflex Co.
d. Pipeline Seal and Insulator, Inc.

2. Sealing Elements: Interlocking links shaped to fit surface of cable or conduit. Include type and number required for material and size of raceway or cable.
3. Pressure Plates: Carbon steel. Include two for each sealing element.
4. Connecting Bolts and Nuts: Carbon steel of length required to secure pressure plates to sealing elements. Include one for each sealing element.

2.3 SLEEVE-SEAL FITTINGS:

A. Description: Manufactured plastic, sleeve-type, waterstop assembly made for embedding in concrete slab or wall. Unit shall have plastic or rubber waterstop collar with center opening to match piping OD.

1. Manufacturers: Subject to compliance with requirements. Available manufacturers offering products that may be incorporated into the Work include, but are not limited to, the following:

a. Presealed Systems.

2.4 GROUT:

A. Nonmetallic, Shrinkage-Resistant Grout: ASTM C 1107, factory-packaged, nonmetallic aggregate grout, noncorrosive, nonstaining, mixed with water to consistency suitable for application and a 30-minute working time.

2.5 SILICONE SEALANTS:

A. Silicone Sealants: Single-component, silicone-based, neutral-curing elastomeric sealants of grade indicated below.

1. Grade: Pourable (self-leveling) formulation for openings in floors and other horizontal surfaces that are not fire rated.

2. Sealant shall have VOC content of 43 g/L or less when calculated according to 40 CFR 59, Subpart D (EPA Method 24).

B. Silicone Foams: Multicomponent, silicone-based liquid elastomers that, when mixed, expand and cure in place to produce a flexible, nonshrinking foam

PART 3 - EXECUTION

3.1 SLEEVE INSTALLATION FOR RACEWAYS AND CABLES:

A. Comply with NECA 1.

B. Comply with NEMA VE 2 for cable tray and cable penetrations.

C. Sleeves for Conduits Penetrating Above-Grade Non-Fire-Rated Concrete and Masonry-Unit Floors and Walls:

1. Interior Penetrations of Non-Fire-Rated Walls and Floors:

a. Seal annular space between sleeve and raceway or cable, using joint sealant appropriate for size, depth, and location of joint.

b. Seal space outside of sleeves with mortar or grout. Pack sealing material solidly between sleeve and wall so no voids remain. Tool exposed surfaces smooth; protect material while curing.

2. Use pipe sleeves unless penetration arrangement requires rectangular sleeved opening.
3. Size pipe sleeves to provide ¼ annular clear space between sleeve and raceway or cable unless sleeve seal is to be installed.
4. Install sleeves for wall penetrations unless core-drilled holes or formed openings are used. Install sleeves during erection of walls. Cut sleeves to length for mounting flush with both surfaces of walls. Deburr after cutting.
5. Install sleeves for floor penetrations. Extend sleeves installed in floors 2 inches above finished floor level. Install sleeves during erection of floors.

D. Sleeves for Conduits Penetrating Non-Fire-Rated Gypsum Board Assemblies:

1. Use circular metal sleeves unless penetration arrangement requires rectangular sleeved opening.
2. Seal space outside of sleeves with approved joint compound for gypsum board assemblies.

E. Aboveground, Exterior-Wall Penetrations: Seal penetrations using steel pipe sleeves and mechanical sleeve seals. Select sleeve size to allow for 1-inch annular clear space between pipe and sleeve for installing mechanical sleeve seals.

F. Underground, Exterior-Wall and Floor Penetrations: Install galvanized steel sleeves. Size sleeves to allow for 1-inch annular clear space between raceway or cable and sleeve for installing sleeve-seal system.

G. Fire-Rated-Assembly Penetrations: Maintain indicated fire rating of walls, partitions, ceilings, and floors at raceway and cable penetrations. Install sleeves and seal raceway and cable penetration sleeves with firestop materials.

H. Openings around electrical penetrations through fire-resistant- rated walls, partitions, floors, or ceilings shall be firestopped using approved methods to maintain the fire resistance rating.

I. Materials used in firestop systems are to be installed in accordance with the manufacturers' instructions provided with the materials. The structural integrity of the floor or wall assembly needs to be evacuated when providing openings for the penetrating items

3.2 SLEEVE-SEAL-SYSTEM INSTALLATION:

A. Install sleeve-seal systems in sleeves in exterior concrete walls and slabs-on-grade at raceway entries into building.

B. Install type and number of sealing elements recommended by manufacturer for raceway or cable material and size. Position raceway or cable in center of sleeve. Assemble mechanical sleeve seals and install in annular space between raceway or cable and sleeve. Tighten bolts against pressure plates that cause sealing elements to expand and make watertight seal.

3.3 SLEEVE-SEAL-FITTING INSTALLATION

A. Install sleeve-seal fittings in new walls and slabs as they are constructed.

B. Assemble fitting components of length to be flush with both surfaces of concrete slabs and walls. Position waterstop flange to be centered in concrete slab or wall.

C. Secure nailing flanges to concrete forms.

D. Using grout, seal the space around outside of sleeve-seal fittings

END OF SECTION 260544

SECTION 260553 – IDENTIFICATION FOR ELECTRICAL SYSTEMS

PART 1 - GENERAL

1.1 SUMMARY:

A. This Section includes electrical identification materials and devices required to comply with ANSI C2, NFPA 70, OSHA standards, and authorities having jurisdiction.

1.2 SUBMITTALS:

A. Submit the following in accordance with Form 816 Article 1.20-1.05.02 and NOTICE TO CONTRACTOR – SUBMITTALS.

B. Product Data: For each electrical identification product indicated.

C. Schedule of Nomenclature: An index of electrical equipment and system components used in identification signs and labels.

1.3 QUALITY ASSURANCE:

A. Comply with ANSI C2.

B. Comply with NFPA 70.

C. Comply with ANSI A13.1 and NFPA 70 for color-coding.

PART 2 - PRODUCTS

2.1 RACEWAY AND CABLE LABELS:

A. Comply with ANSI A13.1, Table 3, for minimum size of letters for legend and for minimum length of color field for each raceway and cable size.

1. Color: Black letters on orange field.
2. Legend: Indicates voltage and service.

B. Pretensioned, Wraparound Plastic Sleeves: Flexible, preprinted, color-coded, acrylic band sized to suit the diameter of the line it identifies and arranged to stay in place by pretensioned gripping action when placed in position.

C. Underground-Line Warning Tape: Permanent, bright-colored, continuous-printed, vinyl tape.

1. Not less than 6 inches wide by 4 mils thick
2. Compounded for permanent direct-burial service.
3. Embedded continuous metallic strip or core.
4. Printed legend indicating type of underground line.

D. Wrap Around Cable Markers: Black, non-smear legends on white background with plastic coated cloth material which remains flexible. Strong adhesive shall assure firm bond on wire.

2.2 NAMEPLATES AND SIGNS:

A. Safety Signs: Comply with 29 CFR, Chapter XVII, Part 1910.145.

B. Engraved Plastic Nameplates and Signs: Engraving stock, melamine plastic laminate, minimum 1/16 inch thick for signs up to 20 sq. in. and 1/8 inch thick for larger sizes.

1. Engraved legend with white letters on black face.
2. Punched or drilled for mechanical fasteners.

C. Exterior, reversed engraved and double laminated: Weather-resistant, nonfading, preprinted with colors, legend, and size required for the application.

D. Fasteners for Nameplates and Signs: Self-tapping, stainless-steel screws or No. 10/32, stainless-steel machine screws with nuts and flat and lock washers.

2.3 MISCELLANEOUS IDENTIFICATION PRODUCTS:

A. Cable Ties: Fungus-inert, self-extinguishing, one-piece, self-locking, Type 6/6 nylon cable ties.

1. Minimum Width: 3/16 inch.
2. Tensile Strength: 50 lb minimum.
3. Temperature Range: Minus 40 to plus 80 deg F.
4. Color: According to color-coding.

PART 3 - EXECUTION

3.1 INSTALLATION:

A. Identification Materials and Devices: Install at locations for most convenient viewing without interference with operation and maintenance of equipment.

B. Lettering, Colors, and Graphics: Coordinate names, abbreviations, colors, and other designations with corresponding designations in the Contract or with those required by codes and standards. Use consistent designations throughout Project.

C. Sequence of Work: If identification is applied to surfaces that require finish, install identification after completing finish work.

D. Color Banding Raceways and Exposed Cables: Band exposed and accessible raceways of the systems listed below:

1. Bands: Pretensioned, wraparound plastic sleeves; colored adhesive tape; or a combination of both. Make each color band 2 inches wide, completely encircling conduit, and place adjacent bands of two-color markings in contact, side by side.
2. Band Locations: At changes in direction, at penetrations of walls and floors, at 25-foot maximum intervals in straight runs, and at 10-foot maximum intervals in congested areas.
3. Apply the following colors to the systems listed below:

   a. Telecommunication System: Green or yellow.

E. Paths of Underground Electrical Lines: During trench backfilling, for exterior underground power, control, signal, and communication lines, install continuous underground plastic line marker located directly above line at 6 to 8 inches below finished grade. Where width of multiple lines installed in a common trench or concrete envelope does not exceed 16 inches overall, use a single line marker.

F. Tape shall have lettering at least 1-inch high with not less than the following identification on the tape: "CAUTION BURIED ELECTRIC LINE BELOW".

G. Secondary Service, Feeder, and Branch-Circuit Conductors: Color-code throughout the secondary electrical system.

208/120 Volt		240/120 Volt	
Phase A	Black	Phase A	Black
Phase B	Red	Phase B	Red
Phase C	Blue		
Neutral	White	Neutral	White
Ground	Green	Ground	Green

2. Factory apply color the entire length of conductors. Field-applied, color-coding methods may be used instead of factory-coded wire for sizes larger than No. 10 AWG:

   a. Colored, pressure-sensitive plastic tape in half-lapped turns for a distance of 6 inches from terminal points and in boxes where splices or taps are made. Apply last two turns of tape with no tension to prevent possible unwinding. Use 1-inch- wide tape in colors specified. Adjust tape bands to avoid obscuring cable identification markings.
   b. Colored cable ties applied in groups of three ties of specified color to each wire at each terminal or splice point starting 3 inches from the terminal and spaced 3 inches apart. Apply with a special tool or pliers, tighten to a snug fit, and cut off excess length.

H. Apply identification to conductors as follows:

1. Multiple Power or Lighting Circuits in the Same Enclosure: Identify each conductor with source, voltage, circuit number, and phase. Use color-coding to identify circuits' voltage and phase.
2. Multiple Control and Communication Circuits in the Same Enclosure: Identify each conductor by its system and circuit designation. Use a consistent system of tags, color-coding, or cable marking tape.

I. Apply identification to junction boxes including voltage, circuit number, and phase of enclosed circuits. Apply warning, caution, and instruction signs as follows:

1. Warnings, Cautions, and Instructions: Install to ensure safe operation and maintenance of electrical systems and of items to which they connect. Install engraved plastic-laminated instruction signs with approved legend where instructions are needed for system or equipment operation. Install metal-backed butyrate signs for outdoor items.
2. Emergency Operation: Install engraved laminated signs with white legend on red background with minimum 3/8-inch high lettering for emergency instructions on power transfer, load shedding, and other emergency operations.

J. Equipment Identification Labels: Engraved plastic laminate. Install on each unit of equipment, including central or master unit of each system. This includes power, lighting, communication, signal, and alarm systems, unless units are specified with their own self-explanatory identification. Unless otherwise indicated, provide a single line of text with 1/2-inch- high lettering on 1-1/2-inch- high label; where two lines of text are required, use labels 2 inches high. Use white lettering on black field. Apply labels for each unit of the following categories of equipment using mechanical fasteners:

1. Panelboards, electrical cabinets, and enclosures.
2. Access doors and panels for concealed electrical items.
3. Emergency system boxes and enclosures.

4. Disconnect switches.
5. Enclosed circuit breakers.
6. Motor starters.
7. Push-button stations.
8. Contactors.
9. Control devices.
10. Power-generating units.
11. Telecommunications equipment.
12. Main disconnect.

END OF SECTION 260553

SECTION 262416 - PANELBOARDS

PART 1 - GENERAL

1.1 SUMMARY:

A. This Section includes lighting and power panelboards and associated auxiliary equipment rated 600 V and less.

B. Related CSI Sections include the following:

1. Division 26 Section 260553, "Identification for Electrical Systems" for labeling materials.

1.2 SUBMITTALS:

A. Submit the following in accordance with Form 816 Article 1.20 – 1.05.02 and NOTICE TO CONTRACTOR – SUBMITTALS.

B. Product Data: For each type of panelboard, accessory item, and component specified.

1. Spare Parts: Include name, address, and telephone number of in-state supplier of spare parts. No out-of-state suppliers shall be permitted.

C. Shop Drawings: For panelboards. Include dimensioned plans, sections, and elevations. Show tabulations of installed devices, major features, and voltage rating. Include the following:

1. Enclosure type with details for types other than NEMA 250, Type 1.
2. Bus configuration and current ratings.
3. Short-circuit current rating of panelboard.
4. Features, characteristics, ratings, and factory settings of individual protective devices and auxiliary components.
5. Wiring Diagrams: Details of schematic diagram including control wiring and differentiating between manufacturer-installed and field-installed wiring.
6. Shunt trip main breaker information.

D. Quality Assurance Submittals:

1. Qualification Data: For firms and persons specified in Part 1.4, “Quality Assurance.”
2. Panelboard Schedules: For installation in panelboards. Submit final versions after load balancing.

E. Maintenance Data: For panelboard components to include in the operational and maintenance manuals specified in Article 1.20 – 1.08.14 subsection 2 and described in NOTICE TO CONTRACTOR – CLOSEOUT DOCUMENTS. Include manufacturer's written instructions for testing circuit breakers.

1.3 QUALITY ASSURANCE:

A. Testing shall be performed by an independent testing agency.

B. Listing and Labeling: Provide products specified in this Section that are listed and labeled.

1. The Terms “Listed” and “Labeled”: As defined in the NEC, Article 100.
2. Comply with NFPA 70.
3. Comply with NEMA PB 1.

1.4 COORDINATION:

A. Coordinate layout and installation of panelboards and components with other construction that penetrates walls or is supported by them, including electrical and other types of equipment, raceways, piping, and encumbrances to workspace clearance requirements.

1.5 SPARE PARTS:

A. Furnish to the Engineer spare parts described below that match products installed and that are packaged with protective covering for storage and identified with labels described contents.

1. Keys: 6 spares of each type for new panelboard cabinet lock.

PART 2 - PRODUCTS

2.1 MANUFACTURERS:

A. Available Manufacturers: Subject to compliance with requirements, manufacturers offering products that may be incorporated into the Work include, but are not limited to, the following:

1. Siemens Energy & Automation, Inc.
2. Eaton Corp.; Westinghouse & Cutler-Hammer Products.
3. General Electric Co.; Electrical Distribution & Control Div.
4. Square D Co.

2.2 PANELBOARD FABRICATION:

A. Enclosures: Flush- or surface-mounted cabinets as indicated. NEMA PB 1, Type 1, unless otherwise indicated to meet environmental conditions at installed location.

1. Outdoor Locations: NEMA 250, Type 3R.

B. Directory Frame: Metal, mounted inside each panelboard door.

C. Bus: Hard drawn copper of 98 percent conductivity.

D. Equipment Ground Bus: Adequate for feeder and branch-circuit equipment ground conductors. Bonded to box.

2.3 LIGHTING AND APPLIANCE BRANCH-CIRCUIT PANELBOARDS:

A. Branch Overcurrent Protective Devices: Bolt-on circuit breakers, replaceable without disturbing adjacent units.

B. Doors: In panelboard front, with concealed hinges. Secure with flush catch and tumbler lock, all keyed alike.

2.4 OVERCURRENT PROTECTIVE DEVICES:

A. Molded-Case Circuit Breaker: NEMA AB 1, handle lockable.

1. Characteristics: Frame size, trip rating, number of poles, and auxiliary devices as indicated and interrupting capacity rating to meet available fault current.
2. Application Listing: Appropriate for application, including Type SWD for switching fluorescent lighting loads and Type HACR for heating, air-conditioning, and refrigerating equipment.
3. Circuit Breakers, 200 A and Larger: Trip units interchangeable within frame size.
4. Circuit Breakers, 400 A and Larger: Field-adjustable short-time and continuous current settings.
5. Current-Limiting Trips: Where indicated, let-through ratings less than NEMA FU 1, Class RK-5.
6. Current Limiters: Where indicated, integral fuse listed for circuit breaker.
7. Lugs: Mechanical lugs and power-distribution connectors for number, size, and material of conductors indicated.
8. Shunt Trip: Where indicated.

B. Fusible Switch: NEMA KS 1, Type HD, clips to accommodate specified fuses, handle lockable.

2.5 ACCESSORY COMPONENTS AND FEATURES:

A. Accessory Set: Include tools and miscellaneous items as required for overcurrent protective device test, inspection, maintenance, and operation.

B. Portable Test Set: Arranged to permit testing of functions of solid-state trip devices without removal from panelboard.

PART 3 - EXECUTION

3.1 INSTALLATION:

A. Install panelboards and accessory items according to NEMA PB 1.1.

B. Mounting Heights: 48 inches above finished floor, measured to the center of the panelboard, or as shown on Contract plans.

C. Mounting: Plumb and rigid without distortion of box. Mount flush panelboards uniformly flush with wall finish.

D. Circuit Directory: Type directory to indicate installed circuit loads after balancing panelboard loads. Obtain approval before installing.

E. Install filler plates in unused spaces.

F. Provision for Future Circuits at Flush Panelboards: Stub four 1-inch (27-GRC) empty conduits from panelboard into accessible ceiling space or space designated to be ceiling space in the future. Stub four 1-inch (27-GRC) empty conduits into raised floor space or below slab not on grade.

G. Wiring in Panelboard Gutters: Arrange conductors into groups, and bundle and wrap with wire ties after completing load balancing.

3.2 IDENTIFICATION:

A. Identify field-installed wiring and components and provide warning signs as specified in CSI Division 26 Section 260553, "Identification for Electrical Systems."

B. Panelboard Nameplates: Label each panelboard with engraved laminated-plastic or metal nameplates mounted with corrosion-resistant screws.

3.3 GROUNDING:

A. Make equipment grounding connections for panelboards as specified in CSI Division 26, Section 260526, "Grounding and Bonding for Electrical Systems."

3.4 CONNECTIONS:

A. Tighten electrical connectors and terminals, including grounding connections, according to manufacturer's published torque-tightening values. Where manufacturer's torque values are not indicated, use those specified in UL 486A and UL 486B.

3.5 FIELD QUALITY CONTROL:

A. Prepare for acceptance tests as follows:

1. Engage a qualified independent testing agency to perform tests and inspections.
2. Make insulation-resistance tests of each panelboard bus, component, and connecting supply, feeder, and control circuits.
3. Make continuity tests of each circuit.

B. Testing: After installing panelboards and after electrical circuitry has been energized, demonstrate product capability and compliance with requirements.

1. Procedures Perform each visual and mechanical inspection and electrical test stated in NETA ATS, Section 7.5 for switches and Section 7.6 for molded-case circuit breakers or as specified by the manufacturer. Certify compliance with test parameters.
2. Correct malfunctioning units on-site, where possible, and retest to demonstrate compliance; otherwise, remove and replace with new units, and retest.

C. Balancing Loads: Contractor shall maintain 20 percent between phase loads within each panelboard during installation, or maintain panel layout according to plans.

3.6 CLEANING:

A. On completion of installation, inspect interior and exterior of panelboards. Remove paint splatters and other spots, dirt, and debris. Touch up scratches and mars of finish to match original finish.

END OF SECTION 262416

SECTION 262726 - WIRING DEVICES

PART 1 - GENERAL

1.1 SUMMARY:

A. This Section includes the following:

1. Receptacles
2. Ground Fault Circuit Interrupter Receptacles
3. Snap Switches
4. Wall Plates

B. Related CSI Sections include the following:

1. Division 26 Section 260519, "Low-Voltage Electrical Power Conductors and Cables"
2. Division 26 Section 260533, "Raceways and Boxes for Electrical Systems"

1.2 SUBMITTALS:

A. Submit the following in accordance with Form 816 Article 1.20 – 1.05.02 and NOTICE TO CONTRACTOR – SUBMITTALS.

B. Product Data: For receptacles, GFCI receptacles, plugs, snap switches and wall plates.

1.3 QUALITY ASSURANCE:

A. Comply with NFPA 70.

B. UL and NEMA Compliance: Provide wiring devices which are listed and labeled by UL and comply with applicable UL and NEMA standards.

1.4 SEQUENCE AND SCHEDULING:

A. Schedule installation of finish plates after the surface upon which they are installed has received final finish.

PART 2 - PRODUCTS

2.1 WIRING DEVICES:

A. General: Provide specification grade wiring devices, in types, characteristics, colors, and electrical ratings for applications indicated which are UL listed and which comply with NEMA WD 1 and other applicable UL and NEMA standards.

1. General: Wiring devices include receptacles, switches and special outlets installed in raceway or conduit boxes, complete with cover plates. Devices shall conform to NEMA WD-1 and shall be UL approved.
2. All devices of a given type and all finished device plates shall be the products of a single manufacturer.
3. Plugs of types to match the associated receptacle shall be provided with each item of portable equipment as specified in other sections. In addition, are spare plugs to match each special receptacle as herein after specified shall be furnished.
4. Explosion-proof devices shall be provided in hazardous areas such as paint storerooms, and other hazardous areas as indicated on the plans.

B. Enclosures: NEMA Type 1 for Maintenance Facility or as indicated on plans

C. Switches:

1. AC tumbler-toggle switches: Meeting minimum requirements of UL 20 and further requirements herein specified and of specification grade, heavy duty, of the type indicated on the plans.

a. Provide switches that operate in any position and are fully enclosed cup type with entire body and cover of molded phenolic, urea or melamine. Do not use fiber, paper or similar insulating material for body or cover.
b. Equip switches with metal mounting yoke with plaster ears, insulating from the mechanism and fastened to the switch body by bolts, screws, rivets or other substantial means that meet test requirements.
c. Provide a green-colored equipment grounding screw on the yoke.
d. Provide the section of yoke normally intended to bear on the surface outside the box with a minimum overall dimension of 3/4 inch, measured at right angles to the longitudinal axis of the yoke.
e. Make switch contacts between silver or silver alloys.
f. Switches shall be side wired with terminal of screw or combination screw-clamp type. Provide access holes for back wiring.

g. Wiring terminals capable of receiving and holding proper wire sizes as shown below:

Switch Rating	Wire Size, AWG No.
20 amperes	12
30 amperes	10

2. Switches for Heavy Duty: Unless specified otherwise, use standard tumble-toggle switches of the AC single unit, toggle type, heavy duty, general use snap switches in accordance with NEMA WD 1 for heavy duty general use type.
3. Switches for Use on Incandescent, Fluorescent, Metal Halide, or High Pressure Sodium Lighting Circuits: Fully rated 20 or 30 amperes at 120 or 277 volts, as indicated on the plans. Actual connected lamp wattage not to exceed the following:

Switch Rating 120 and 277 Volts	Maximum Wattage Allowed
20 amperes	1,400
30 amperes	2,400

4. Switches for Power Equipment: Switches controlling outlets other than lighting, such as motors less than 1/4 horsepower, may be specification grade, flush type, AC/DC contacts rated ten amperes, 125 volts. Switches controlling straight resistance loads may be snap switches as specified herein, of the proper rating up to 30 amperes at 120-240 volts. Switches used for controlling motors shall be rated for at least the horsepower of the motor controlled.
5. Available Manufacturers: Subject to compliance with requirements, manufacturers offering products which may be incorporated in the work include, but are not limited to, the following:

   a. Arrow-Hart Division, Crouse-Hinds Company.
   b. Bryant Electric Company.
   c. Hubbell, Inc.
   d. General Electric.
   e. Pass and Seymour.
   f. Leviton

D. Receptacles and Plugs:

1. General Use: Grounding duplex type, conforming to NEMA WD-1, configuration 5-20R. Bodies shall be of thermosetting plastic supported on a metal mounting strap. Wiring terminals shall be of the screw type, back or side wired.
2. Ground Fault Interrupter Receptacle: NEMA Designation 5-20R, duplex, three wire, 20 amperes, 125 volt, ground fault interrupter type with pilot light to indicate if receptacle is working or faulted (tripped). Do not arrange to protect

connected downstream receptacles on same circuit unless called for on plans or approved by Designer. Design units for installation in a 2-3/4-inch- deep outlet box without an adapter.

E. Device/Communication Plates:

1. All device plates shall be 0.040 inch minimum with struck-up beveled edges, void of sharp corners and burrs.
2. Unless otherwise noted herein and on drawings, all device plates for wall outlets and switches shall be brush satin finish stainless steel for office areas and bay areas.
3. Device plates for wall telephone outlets shall contain two openings for RJ45 Jacks. One Jack for voice and the other for data. Unless otherwise specified on the plans.
4. Device plates for exposed work shall be steel. Plates for wet locations shall be gasketed and shall have in-use covers. Device plates for the salt shed shall be the corrosive resistant type.
5. Plate for floor receptacle shall be forged brass with duplex flap type openings and specifically designed for the associated floor box.
6. Plate-Securing Screws: Metal with head color to match plate finish.

PART 3 - EXECUTION

3.1 INSTALLATION OF WIRING DEVICES AND ACCESSORIES:

A. Install wiring devices and accessories as indicated, in accordance with manufacturer's written instructions, applicable requirements of NEC and in accordance with recognized industry practices to fulfill project requirements.

B. Coordinate with other Work, including painting, electrical boxes and wiring installations, as necessary to interface installation of wiring devices with other Work.

C. Install wiring devices only in electrical boxes which are clean; free from building materials, dirt, and debris.

D. Protect devices and assemblies during painting. Install wall plates after painting work is completed.

E. Tighten connectors and terminals, including screws and bolts, in accordance with equipment manufacturer's published torque tightening values for wiring devices. Where manufacturer's torquing requirements are not indicated, tighten connectors and terminals to comply with tightening torques specified in UL Standard 486A. Use properly scaled torque indicating hand tool.

F. Switches and Receptacles: Unless otherwise indicated, mount flush, with long dimension vertical. Wall switches shall be mounted 4’ above finished floor opposite hinge side of door, 4” from door trim, and ganged under one cover where more than one switch is shown. Disconnect switches shall be mounted 5’ above finished floor and receptacles shall be mounted 24” above finished floor, and in office areas unless otherwise noted. Where finned tube radiation exists, mount receptacles 2” above finned tube radiation unless otherwise noted on plans. All wall switches and receptacles shall be flush mounted in finished areas.

3.2 PROTECTION:

A. Protect installed components from damage. Replace damaged items prior to final acceptance.

3.3 FIELD QUALITY CONTROL:

A. Testing: Prior to energizing circuits, test wiring for electrical continuity, and for short-circuits. Ensure proper polarity of connections is maintained. Subsequent to energizing, test wiring devices and demonstrate compliance with requirements, operating each operable device at least six times.

B. Test ground fault interrupter operation with both local and remote fault simulations in accordance with manufacturer recommendations.

C. Remove malfunctioning units, replace with new units, and retest as specified above.

3.4 CLEANING:

A. General: Internally clean devices, device outlet boxes, and enclosures. Replace stained or improperly painted wall plates or devices.

END OF SECTION 262726

SECTION 262813 - FUSES

PART 1 - GENERAL

1.1 SUMMARY:

A. Section Includes:

1. Fuses.

1.2 SUBMITTALS:

A. Submit the following in accordance with Form 816 Article 1.20 – 1.05.02 and NOTICE TO CONTRACTOR – SUBMITTALS.

B. Product Data: For each fuse type specified. Include the following:

1. Descriptive data and time-current curves.
2. Let-through current curves for fuses with current-limiting characteristics.
3. Coordination charts and tables and related data.

Spare Parts: Include name, address, and telephone number of in-state supplier of spare parts. No out-of-state suppliers shall be permitted.

C. Maintenance Data: For tripping devices to include in the operation and maintenance manuals specified in Form 816 Article 1.20 – 1.08.14 subsection 2 and described in NOTICE TO CONTRACTOR – CLOSEOUT DOCUMENTS.

1.3 QUALITY ASSURANCE:

A. Source Limitations: Obtain fuses from one source and by a single manufacturer.

B. Comply with NFPA 70 for components and installation.

C. Listing and Labeling: Provide fuses specified in this Section that are listed and labeled.

1. The Terms "Listed" and "Labeled": As defined in the NEC, Article 100.

1.4 SPARE PARTS:

A. Furnish to the Engineer spare parts described below that match products installed, are packaged with protective covering for storage, and are identified with labels describing contents.

1. Spare Fuses: Furnish quantity equal to 20 percent of each fuse type and size installed, but not less than 1 set of 3 of each type and size.

PART 2 - PRODUCTS

2.1 MANUFACTURERS:

A. Available Manufacturers: Subject to compliance with requirements, manufacturers offering fuses that may be incorporated into the Work include, but are not limited to, the following:

1. Cooper Industries, Inc.; Bussmann Div.
2. Eagle Electric Mfg. Co., Inc.
3. Edison Fuse, Inc.
4. General Electric Co.; Wiring Devices Div.

2.2 CARTRIDGE FUSES:

A. Characteristics: NEMA FU 1, nonrenewable cartridge fuse; class as specified or indicated; current rating as indicated; voltage rating consistent with circuit voltage.

PART 3 - EXECUTION

3.1 EXAMINATION:

A. Examine utilization equipment nameplates and installation instructions to verify proper fuse locations, sizes, and characteristics.

B. Do not proceed with installation until unsatisfactory conditions have been corrected.

3.2 FUSE APPLICATIONS:

A. Main Service: Class L, fast acting.

B. Main Feeders up to 600A: Class J, time delay.

C. Motor Branch Circuits: Class RK1, time delay.

D. Other Branch Circuits: Class RK5, non-time delay.

3.3 INSTALLATION:

A. Install fuses in fusible devices as indicated. Arrange fuses so fuse ratings are readable without removing fuse.

3.4 IDENTIFICATION:

A. Install labels complying with requirements for identification specified in CSI Division 26, Section 260553 "Identification for Electrical Systems" and indicate fuse replacement information on inside door of each fused switch and adjacent to each fuse block, socket, and holder.

END OF SECTION 262813

SECTION 262816 - ENCLOSED SWITCHES AND CIRCUIT BREAKERS

PART 1 - GENERAL

1.1 SUMMARY:

A. This Section includes individually mounted switches and circuit breakers used for the following:

1. Feeder and equipment disconnect switches
2. Feeder branch-circuit protection
3. Motor disconnect switches
4. Bolt-on circuit breakers
5. Low Voltage Dispenser Disconnect (LVDD)

B. Related Sections: The following Sections contain requirements that relate to this section:

1. CSI Division 26 Section 262726, "Wiring Devices" for attachment plugs and receptacles, and snap switches used for disconnect switches.

1.2 SUBMITTALS:

A. Submit the following in accordance with Form 816 Article 1.20 – 1.05.02 and NOTICE TO CONTRACTOR – SUBMITTALS.

B. Product Data for switches, circuit breakers, and accessories specified in this section include the following:

1. Descriptive data and time-current curves.
2. Let-through current curves for circuit breakers with current-limiting characteristics.
3. Coordination charts and tables and related data.
4. Wiring diagrams detailing wiring for power and control systems and differentiating between manufacturer-installed and field-installed wiring.

Spare Parts: Include name, address, and telephone number of in-state supplier of spare parts. No out-of-state suppliers shall be permitted.

C. Quality Assurance Submittals:

1. Qualification data for firms and persons specified in Part 1.3 "Quality Assurance" to demonstrate their capabilities and experience. Include lists of

completed projects with project names and addresses, names and addresses of architects and owners, and other information specified.

D. Maintenance Data: For tripping devices to include in the operation and maintenance manuals specified in Form 816 Article 1.20 – 1.08.14 subsection 2 and described in NOTICE TO CONTRACTOR – CLOSEOUT DOCUMENTS.

1.3 QUALITY ASSURANCE:

A. Testing Agency Qualifications: The independent testing agency shall meet OSHA criteria for accreditation of testing laboratories, Title 29, Part 1907, or shall be a full member company of NETA.

1. Testing Agency's Field Supervisor: Person currently certified by NETA or the NICET, to supervise on-site testing specified in Part 3.

B. Source Limitations: Obtain disconnect switches and circuit breakers from one source and by a single manufacturer.

C. Comply with NFPA 70 for components and installation.

D. Listing and Labeling: Provide disconnect switches and circuit breakers specified in this Section that are listed and labeled.

1. The Terms "Listed" and "Labeled": As defined in the NEC, Article 100.

1.4 COORDINATION:

A. Coordinate layout and installation of switches, circuit breakers, and components with other construction, including conduit, piping, equipment, and adjacent surfaces. Maintain required workspace clearances and required clearances for equipment access doors and panels.

B. Coordinate the installation of new bolt-on circuit breakers and main circuit breakers with existing panels. Match existing breakers including breaker manufacturer and short circuit rating.

PART 2 - PRODUCTS

2.1 MANUFACTURERS:

A. Available Manufacturers: Subject to compliance with requirements, manufacturers offering disconnect switches and circuit breakers that may be incorporated into the work include, but are not limited to, the following:

1. Fusible Switches and Nonfusible Switches:

a. Eaton Corp.; Cutler-Hammer Products
b. General Electric Co.; Electrical Distribution and Control Division
c. General Switch Corp.
d. Siemens Energy & Automation, Inc.
e. Square D Co.
f. Westinghouse Electric Corp.; Distribution & Control Business Unit

2. Molded-Case Circuit Breakers:

a. American Circuit Breaker Corp.
b. Eaton Corp.; Cutler-Hammer Products
c. General Electric Co.; Electrical Distribution and Control Division
d. General Switch Corp.
e. Klockner-Moeller
f. Siemens Energy & Automation, Inc.
g. Square D Co.
h. Westinghouse Electric Corp.; Distribution & Control Business Unit

3. Combination Circuit Breaker and Ground Fault Trip:

a. American Circuit Breaker Corp.
b. General Electric Co.; Electrical Distribution and Control Division
c. Siemens Energy & Automation, Inc.
d. Square D Co.
e. Westinghouse Electric Corp.; Distribution & Control Business Unit

4. Molded-Case, Current-Limiting Circuit Breakers:

a. General Electric Co.; Electrical Distribution and Control Division
b. Siemens Energy & Automation, Inc.
c. Square D Co.
d. Westinghouse Electric Corp.; Distribution & Control Business Unit

5. Integrally Fused, Molded-Case Circuit Breakers

a. General Electric Co.; Electrical Distribution and Control Division
b. Siemens Energy & Automation, Inc.
c. Westinghouse Electric Corp.; Distribution & Control Business Unit.

6. Bolt-on circuit breakers

a. Square D. Co.
b. General Electric Co.

7. Low Voltage dispenser Disconnect (LVDD)
a. Square D-Co.
b. Power Integrity Corporation or approved equal.

2.2 DISCONNECT SWITCHES:

A. Low Voltage Dispenser Disconnect (LVDD):

1. Outdoor Location: Type 3R.
2. Other Wet or Damp Indoor Locations: Type 4.
3. Lockable cover.
4. Compliance to NFPA 30A Section 6.7 and NEC Sections 514.11 and 514.13.

B. Enclosed, Nonfusible Switch: NEMA KS 1, Type HD, with lockable handle.

C. Enclosed, Fusible Switch, 800 A and Smaller: NEMA KS 1, Type HD, clips to accommodate specified fuses, enclosure consistent with environment where located, handle lockable with 2 padlocks, and interlocked with cover in CLOSED position.

D. Enclosure: NEMA KS 1, Type 1, unless otherwise specified or required to meet environmental conditions of the installed location.

1. Outdoor Locations: Type 3R.
2. Other Wet or Damp Indoor Locations: Type 4.
3. Hazardous Areas Indicated on Drawings: Type 7C.

2.3 ENCLOSED CIRCUIT BREAKERS:

A. Enclosed, Molded-Case Circuit Breaker: NEMA AB 1, with lockable handle.

B. Characteristics: Frame size, trip rating, number of poles, and auxiliary devices as indicated and interrupting rating to meet available fault current.

C. Application Listing: Appropriate for application, including switching fluorescent lighting loads or heating, air-conditioning, and refrigerating equipment.

D. Circuit Breakers, 200 A and Larger: Trip units interchangeable within frame size.

E. Circuit Breakers, 400 A and Larger: Field-adjustable, short-time and continuous-current settings.

F. Current-Limiting Trips: Where indicated, let-through ratings less than NEMA FU 1, Class RK-5.

G. Current Limiters: Where indicated, integral fuse listed for circuit breaker.

H. Molded-Case Switch: Where indicated, molded-case circuit breaker without trip units.

I. Lugs: Mechanical lugs and power-distribution connectors for number, size, and material of conductors indicated.

J. Shunt Trip: Where indicated.

K. Accessories: As indicated.

L. Enclosure: NEMA AB 1, Type 1, unless otherwise specified or required to meet environmental conditions of installed location.

1. Outdoor Locations: Type 3R.
2. Other Wet or Damp Indoor Locations: Type 4.
3. Hazardous Areas Indicated on plans: Type 7C.

2.4 LOW VOLTAGE DISPENSER DISCONNECT (LVDD)

1. Comply with the National Electrical Code requirements for motor fuel dispensing facility disconnects Articles 514.11 and 514.13.
2. Individual switches used to isolated lower voltages for communications, data and video circuits for maintenance and servicing purposes, but are also wired into the emergency shutdown system.
3. Locking provisions for Lockout-Tagout requirements.
4. Designed, manufactured and tested under current Underwriters laboratories (UL) codes and standards.
5. UL Listed – UL 1238 Control Equipment for use with flammable liquid dispensing devices.

PART 3 - EXECUTION

3.1 INSTALLATION:

A. Install disconnect switches and circuit breakers in locations as indicated, according to manufacturer's written instructions.

B. Install disconnect switches and circuit breakers level and plumb.

C. Connect disconnect switches and circuit breakers and components to wiring system and to ground as indicated and instructed by manufacturer.

1. Tighten electrical connectors and terminals according to manufacturer's published torque-tightening values. Where manufacturer's torque values are not indicated, use those specified in UL 486A and UL 486B.

D. Identify each disconnect switch and circuit breaker according to requirements specified in CSI Division 26 Section 260553, "Identification for Electrical Systems."

E. Enclosure Nameplates: Label each enclosure with engraved metal or laminated-plastic nameplate mounted with corrosion-resistant screws

3.2 FIELD QUALITY CONTROL:

A. Testing: After installing disconnect switches and circuit breakers and after electrical circuitry has been energized, demonstrate product capability and compliance with requirements. Engage a qualified independent testing agency to perform tests and inspections.

1. Procedures: Perform each visual and mechanical inspection and electrical test stated in NETA ATS, Section 7.5 for disconnect switches and Section 7.6 for molded-case circuit breakers. Manufacturer’s recommended testing is also valid. Certify compliance with test parameters.

B. Correct malfunctioning units on-site, where possible, and retest to demonstrate compliance; otherwise, remove and replace with new units and retest.

3.3 CLEANING:

A. After completing system installation, including outlet fittings and devices, inspect exposed finish. Remove burrs, dirt, and construction debris and repair damaged finish including chips, scratches, and abrasions.

END OF SECTION 262816

SECTION 265600 - EXTERIOR LIGHTING

PART 1 - GENERAL

1.1 SUMMARY:

A. This Section includes exterior lighting fixtures, lamps, ballasts, poles, and accessories for the complete outdoor lighting as shown on plans.

B. Related CSI Sections include the following:

1. Division 26, Section 260533, "Raceways and Boxes for Electrical Systems"
2. Division 26, Section 262726, "Wiring Devices."

C. Description:

1. The lighting system shall operate from 240/120 volts, single phase, three wire, 60 Hertz systems and 208/120 volts, single phase, three wire, 60 Hertz systems or as called for on the project plans. LED(s), complete with driver(s), shall be installed as shown on the plans.
2. Fixtures, outlets, receptacles, switches and all other applicable lighting system components and details shall be as shown on the plans or as specified.
3. The plans show the location, number, size and type of lighting units and fixture schedule. All fixtures shall be UL listed.
4. Lighting plans are diagrammatic, with fixture outlets located approximately to scale but not dimensioned. Raceways are not generally shown. The Installer shall check lighting drawings against field conditions and the drawings of other disciplines for interferences and shall select and lay out locations for outlets and obtain approval for final locations from Engineer.
5. Fixtures to be installed in wet, damp, moist, corrosive or outdoor locations will be acceptable only when designed and manufactured specifically for outdoor, rugged, weatherproof services. Each part, component, nut, bolt, rivet and spring shall be made of materials of effective corrosion resistance or have been subjected to finishing treatment which will assure such resistance. Fixtures shall be certified by manufacturer for intended purpose.

1.2 SUBMITTALS:

A. Submit the following in accordance with Form 816 Article 1.20 – 1.05.02 and NOTICE TO CONTRACTOR – SUBMITTALS.

B. Product Data: Include photometric curves, illustrations, specifications, schedules and material lists with quantities showing complete details of all proposed equipment.

C. Maintenance Data: For interior lighting to include in the operation and maintenance manuals specified in Form 816 Article 1.20-1.08-14 subsection 2 and described in NOTICE TO CONTRACTOR – CLOSEOUT DOCUMENTS.

1.3 QUALITY ASSURANCE:

A. Comply with applicable local code requirements of the authority having jurisdiction and NEC Articles 225, 250, 410, and 501 as applicable to installation, and construction of exterior building lighting fixtures.

B. Comply with requirements of UL standards, including Standards 484A and B, pertaining to exterior lighting fixtures. Provide exterior lighting fixtures and components which are UL-listed and labeled.

C. Comply with applicable requirements of NFPA 780, "Lightning Protection Code," pertaining to installation of exterior lighting fixtures.

D. Comply with ANSI C2, "National Electrical Safety Code."

1.4 SEQUENCING AND SCHEDULING:

A. Coordinate with other work including conductors and cable, raceways and boxes, to properly interface installation of interior lighting fixtures with other work.

1.5 STORAGE AND HANDLING OF POLES:

A. General: Store poles on decay-resistant treated skids at least 1 ft above grade and vegetation. Support pole to prevent distortion and arrange to provide free air circulation.

B. Metal Poles: Retain factory-applied pole wrappings until just before pole installation. For poles with nonmetallic finishes, handle with web fabric straps.

1.6 SPARE PARTS:

A. Furnish to the Engineer spare parts described below that match products installed and that are packaged with protective covering for storage and identified with labels describing contents.

1. Fifteen percent spare LED Modules, but not less than 1, of each type and size LED Module used in each fixture.
2. Fifteen percent spare LED Drivers, but not less than 1, of each type and size LED Driver used in each fixture.

1.7 WARRANTIES:

A. Refer to Form 816 Article 1.20-1.06.08 and NOTICE TO CONTRACTOR – CLOSEOUT DOCUMENTS for additional information.

B. Warranty period: 5 years from the issuance of Certificate of Compliance for LED fixture, factory-installed electrical component system; a minimum of two years for other luminaire components. The warranty shall cover both parts and labor for the complete warranty period.

C. Replace defective and burned out LED modules for a period of one year following the date of Certificate of Compliance.

PART 2 - PRODUCTS

2.1 MANUFACTURERS:

A. Available Manufacturers: Subject to compliance with CDOT Maintenance requirements, lighting manufacturers offering products that may be incorporated in the work are the following or an approved equal:

1. Holophane
2. Lithonia
3. Hubbell
4. RAB

B. Available Manufacturers: Subject to compliance with CDOT Maintenance requirements, LED manufacturers offering products that may be incorporated in the work are the following or an approved equal:

1. Cree Inc.

2. Nichia
3. Osram Opto Semiconductors

2.2 MATERIALS:

A. General: Lighting fixtures (luminaires) shall be complete with drivers, mounting brackets and hardware, LED modules, installation accessories, fixture wire, and all accessories as required, as specified in the Fixture Schedule, as shown on the Contract plans and as required by NEC.

B. Lighting Fixtures: The specified manufacturers and catalog numbers are consistent with lighting fixtures currently utilized at other CDOT facilities.

C. Drivers: Light engine(s) configurations consist of high-efficacy LEDs mounted to metal-core circuit boards to maximize heat dissipation and promote long life. Class 1 electronic drivers shall be designed to have a power factor >90%, THD <20%, and an expected life of 100,000 hours with <1% failure rate. Easily serviceable 10kV or 6kV surge protection device meeting a minimum Category C Low operation (per ANSI/IEEE C62.41.2).

D. Refractors and Reflectors: All glassware and plastic shall be uniform, free from defects and photometrically tested for distribution by an independent testing laboratory. Plastic diffusers shall be of new virgin-acrylic plastic material. Designer reserves the right to review photometric test.

E. Conduits: Conduit, including hangers and fittings, shall be installed where shown on the Contract plans and shall be in accordance with CSI Division 26 Section 260533, "Raceways & Boxes for Electrical Systems."

F. Temporary Fuel Luminaire

1. Type “L1” Dust-To-Dawn LED floodlight with two (2) tool-free adjustable heads. Cast aluminum, corrosion-resistant housing. Clear acrylic lenses, fully gasketed. Input 20W, 4500K color temperature.

G. Fuel Island Luminaire

1. Type “L2” fixture housings shall be constructed from single-piece die-cast aluminum housing with integral heat sink fins to optimize thermal management through conductive and convective cooling. Modular design to allow for ease of maintenance and future light engine upgrades. The LED driver shall be mounted in direct contact with the casting to promote low operating temperature and long life.

Housing shall be completely sealed against moisture and environmental contaminants (IP66). Low EPA (0.8 ft^2) for optimized pole wind loading. Basis of design: Lithonia Lighting D-Series Size 0 LED Area Luminaire or approved equal, equipped with a long life LED twist-lock photocell. Provide one photocell for each light fixture. The Contractor shall submit a complete light analysis if a different manufacturer is used.

2. Type "L2" fixture exterior parts shall be protected by a zinc-infused Super Durable TGIC thermoset powder coat finish to provide resistance to corrosion and weathering.

2.3 FIXTURE SUPPORT COMPONENTS:

A. Wind-Load Strength: 110 MPH with 1.3 Gust Factor; for total support assembly, including pole, base, and anchorage, where used, to carry the fixtures, supports, and appurtenances at the indicated heights above grade without deflection or whipping.

B. Mountings, Fastenings, and Appurtenances:

1. Corrosion-resistant components compatible with the poles and fixtures that will not cause galvanic action at contact points. Provide mountings that will correctly position the luminaire to provide the indicated light distribution.

C. Pole Shaft: Square Straight Steel, one piece construction, tenon and, base cover standard square, Gasketed hand-hole cover, Lektrocote finish standard.

D. Pole Bases: per manufacturer.

E. Poles: Hot Rolled Carbon Square Steel Tubing. Basis of design: Lithonia's Catalog No. SSS-16-4G-DM28-DDB or approved equal.

F. Metal Pole Grounding Provisions: Ground lug connected to a ¾", 10' long copper ground rod with a #6 AWG conductor.

G. Pole-Top: Fabricated to support the fixtures indicated and securely fastened to the pole top.

H. Finish: Dark Bronze

I. Wind Rating: 110 MPH with 1.3 Gust Factor

J. Bolt Circle: Per Manufacturer’s Recommendation

K. Foundation: Per plan detail. Bolt circle per pole manufacturer recommendation.

L. Anchor bolts: Galvanized “J” bolt, template included (4-bolt design), sized in accordance with pole manufacturer’s recommendation. Pole shall be rated to withstand 110 MPH winds and a 1.3 gust factor.

2.4 LAMPS:

A. LED’s, (Type L1) multi-chip, high-output, long life.

B. LED’s (Type L2) forward optics, 40-LED’s (2-engines).

2.5 FINISH:

A. Metal Parts: Manufacturer's standard finish except as otherwise indicated. For fixtures mounted on poles, match finish of poles and luminaire fixtures. Finish applied over corrosion-resistant primer, free of streaks, runs, holidays, stains, blisters, and similar defects. Remove poles, fixtures, and accessories showing evidence of corrosion or finish failure during Project warranty period and replace with new items.

B. Other Parts: Manufacturer's standard finish except as otherwise indicated.

PART 3 - EXECUTION

3.1 EXAMINATION:

A. Examine areas and conditions under which lighting fixtures are to be installed, and substrate for supporting lighting fixtures. Notify Engineer in writing of conditions detrimental to proper completion of the work. Do not proceed with work until unsatisfactory conditions have been corrected in manner acceptable to Installer and with approval of Engineer.

3.2 INSTALLATION:

A. Install all luminaires, lamps and associated supports, fittings, conduit, boxes, wiring and grounding conductors as called for in this section, as shown on the plans, as required and in accordance with the manufacturer's instructions and recommendations.

B. Prior to the issuance of the Certificate of Compliance, thoroughly clean the luminaires, lamps and accessories and shall replace all lamps which were used for a period equivalent to 50 percent or more of their rated life, at no additional cost.

C. All fixtures shall be aligned and directed as shown or so as to illuminate the desired area properly. Fixtures shall be directly and rigidly mounted on their supporting structures using bolted connections. The conduit system shall not be used to support fixtures unless called for.

D. Where aluminum contacts concrete or dissimilar metal, separate contact surfaces with gasket, non-absorptive tape or bituminous coating to prevent corrosion. Use stainless steel fasteners.

E. Fixtures shall be mounted plumb, level and in straight lines. Rows of fixtures shall be installed accurately as to line and level. Fastenings and supports shall be firmly set so that the fixtures will not be distorted by handling incident to normal maintenance. All parts including lamps shall be secured to prevent falling or dislocation.

F. Lighting fixtures shall be positioned to clear all obstructions.

G. All auxiliary steel, supports and brackets of all kinds for safety erecting the fixtures shall be furnished and installed in place by the Installer.

H. Where coordination with other equipment is necessary some departure from the locations shown may be permitted on approval of Engineer.

I. All lighting units when installed shall be set true and shall be free of leaks, warps, dents or other imperfections.

J. All lighting fixtures shall be directly grounded to the equipment grounding system by means of a conductor of size not less than that required by NEC. If insulated, the ground conductor insulation shall be colored green.

K. The Installer shall fill in circuit designations on the panelboard directory as soon as permanent connections are completed.

L. Taps and splices shall be made with insulated wire nut connectors of the setscrew or spring type or with indent compression type connectors. Solid wire shall be terminated at screw type connections by looping around the terminal screw. At panelboards, solid wire may be terminated using screw type pressure terminals; stranded wire may be terminated using saddle type pressure terminals.

M. Install poles plumb. Provide shims or double nits to adjust plumb. Grout around each base.

N. All fixtures shall be installed for seismic requirements.

3.3 GROUNDING:

A. Provide equipment grounding connections for interior lighting fixtures as indicated under CSI Division 26 Section 260526, "Grounding and Bonding for Electrical Systems."

3.4 FIELD QUALITY CONTROL:

A. The Installer is not responsible for the foot candles of illumination provided by the completed systems. However, if after the lighting is installed and in operation, any areas are noted which are obviously under or over lit, the Installer shall promptly advise the Engineer.

B. Lamps/LED Modules furnished for temporary use during the construction period shall be similar to those shown on the fixture schedule. Fixtures shall be protected and maintained in good condition during construction. At the completion of the work, all fixtures shall be cleaned, inspected, and repaired, or replaced if damaged, and a complete set of new incandescent lamps shall be installed in fixtures requiring incandescent lamps.

3.5 ADJUSTING AND CLEANING:

A. Clean lighting fixtures of dirt and construction debris upon completion of installation. Clean finger-prints and smudges from lenses.

B. Protect installed fixtures from damage during remainder of construction period.

C. Adjust aim-able fixtures to provide required light intensities.

END OF SECTION 265600

PERMITS AND/OR SUPPLEMENTAL TO FORM 816 AND REQUIRED PROVISIONS:

The following Permits and/or Supplemental to Form 816 and Required Provisions follow this page and are hereby made part of this Contract.

- **PERMITS AND/OR PERMIT APPLICATIONS**

  Flood Management Certification Issued on March 3, 2016

- **SUPPLEMENTAL SPECIFICATIONS TO STANDARD SPECIFICATIONS FORM 816**

- **Construction Contracts - Required Contract Provisions (State Funded Only Contracts)**

PERMITS:

Flood Management Certification

Connecticut Department of
ENERGY &
ENVIRONMENTAL
PROTECTION

79 Elm Street • Hartford, CT 06106-5127 www.ct.gov/deep Affirmative Action/Equal Opportunity Employer

FLOOD MANAGEMENT CERTIFICATION

Connecticut Department of Transportation
2800 Berlin Turnpike, P.O. Box 317546
Newington, CT 06131-7546

Attn: Mark W. Alexander, Transportation Assistant Planning Director

Re: **Approval of Certification**
FM-201600934
DOT Project #171-418, Hartford Maintenance Facility Tank Replacement
Hartford, CT

Dear Mr. Alexander:

The Inland Water Resources Division of the Department of Energy & Environmental Protection has reviewed the flood management certification application prepared by John W. Waleszczyk of the Connecticut Department of Transportation, and signed by Thomas J. Maziarz of the Connecticut Department of Transportation ("Certifying Agency").

The certification document dated February 1, 2016, and submitted February 3, 2016, states that the proposed activity has been designed in compliance with the requirements of Section 25-68d(b) of the Connecticut General Statutes (CGS) and Section 25-68h-1 through 25-68h-3 of the Regulations of Connecticut State Agencies (RCSA).

The project consists of the replacement of fuel storage tanks in the City of Hartford, as shown on plans entitled, "*Glastonbury & Hartford Maintenance Facility Tank Replacement, Preliminary Design Review,*" prepared by the Connecticut Department of Transportation's Office of Engineering, and submitted with the application on February 3, 2016. The project is located within the 500-yr FEMA flood zone of the Connecticut River.

The above referenced certification is hereby approved with the following conditions:

Operating Conditions:

1. This approval shall expire ten years after issuance or if the construction of any structures or facilities authorized herein is not commenced within three years of issuance of this approval.

2. The Certifying Agency may not make any alterations, except de minimis alterations, to any structure, facility, or activity authorized by this certification unless the Certifying Agency applies for and receives a modification of this certification. A de minimis alteration means a change in the design or operation of the authorized permit that does not increase its adverse environmental or other regulatory impacts.

3. In constructing or maintaining any structure or facility or conducting any activity authorized herein, or in removing any such structure or facility, the Certifying Agency shall employ best management practices to control storm water discharges, to prevent erosion and sedimentation, and to otherwise prevent pollution of wetlands and other waters of the State. The Certifying Agency shall immediately inform the Commissioner of any adverse impact or hazard to the environment which occurs or is likely to occur as the direct result of the construction, maintenance, or conduct of structures, facilities, or activities authorized herein. Best Management Practices include, but are not limited, to practices identified in the *Connecticut Guidelines for Soil Erosion and Sediment Control* as revised, *2004 Connecticut Stormwater Quality Manual*, Department of Transportation's *ConnDOT Drainage Manual* as revised, and the Department of Transportation Standard Specifications as revised.

4. All temporary structures, cofferdams, and fill shall not impede the movement of flood flows and shall be removed at the completion of their use. The design of such temporary structure, cofferdams and fill shall be based on the DOT Drainage Manual, where applicable. All temporary and permanent fill shall be clean and free of stumps, rubbish, hazardous and toxic material.

5. The Certifying Agency shall cause to be removed equipment and materials from the floodplain during periods when flood warnings have been issued or are anticipated by a responsible federal, state or local agency. It shall be the Certifying Agency's responsibility to obtain such warnings when flooding is anticipated.

This authorization is subject to and does not derogate any present or future property rights or other rights or powers of the State of Connecticut, conveys no property rights in real estate or material nor any exclusive privileges, and is further subject to any and all public and private rights and to any federal, state, or local laws or regulations pertinent to the property or activity affected thereby. No revisions or alterations to the approved plans are allowed without first obtaining written approval from this Division of such alterations.

If there are any questions, contact Colin Clark of the Inland Water Resources Division at 860-424-3214.

Sincerely,

March 3, 2016

Date

Cheryl A. Chase, Director
Inland Water Resources Division

CAC/CJC

cc:

State of Connecticut

Department of Transportation

SUPPLEMENTAL SPECIFICATIONS

TO

THE STANDARD SPECIFICATIONS

FOR

ROADS, BRIDGES, FACILITIES

AND INCIDENTAL CONSTRUCTION

FORM 816

2004

JANUARY 2016

January 2016

DIVISION I
GENERAL REQUIREMENTS AND COVENANTS

SECTION		SPECIFICATION NUMBER
1.01	Definition of Terms and Permissible Abbreviations	101
1.02	Proposal Requirements and Conditions	102
1.03	Award and Execution of Contract	103
1.05	Control of the Work	105
1.06	Control of Materials	106
1.07	Legal Relations and Responsibilities	107
1.08	Prosecution and Progress	108
1.09	Measurement and Payment	109
1.10	Environmental Compliance	110
1.11	Claims	111
1.20	General Clauses for Facilities Construction	120

DIVISION II
CONSTRUCTION DETAILS

SECTION		SPECIFICATION NUMBER
2.02	Roadway Excavation, Formation of Embankment and Disposal of Surplus Material	202
2.05	Trench Excavation	205
2.11	Anti-Tracking Pad	211
2.12	Subbase	212
2.16	Pervious Structure Backfill	216
2.18	Sedimentation Control Bales	218
2.19	Sedimentation Control System	219
3.02	Rolled Granular Base	302
3.03	Concrete Base	303
3.04	Processed Aggregate Base	304
4.01	Concrete for Pavement	401
4.03	Cold Reclaimed Asphalt Pavement	403
4.06	Bituminous Concrete	406
4.14	Bituminous Surface Treatment	414
5.04	Railroad Protection	504
5.08	Shear Connectors	508
5.14	Prestressed Concrete Members	514
6.01	Concrete for Structures	601
6.03	Structural Steel	603
6.12	Concrete Cylinder Curing Box	612
6.51	Culverts	651
7.01	Drilled Shafts	701
7.02	Piles	702
7.06	Micropiles	706
7.16	Temporary Earth Retaining System	716
7.17	Earth Retaining System Left in Place	717
7.25	Bagged Stone	725
8.11	Concrete Curbing	811
8.13	Stone Curbing	813
8.22	Temporary Precast Concrete Barrier Curb	822
9.07	Barways	907
9.10	Metal Beam Rail	910
9.18	Three-Cable Guide Railing (I-Beam Post) and Anchorages	918
9.21	Concrete Sidewalks and Ramps	921
9.22	Bituminous Concrete Sidewalk Bituminous Concrete Driveway	922
9.41	Service Bridges	941
9.44	Topsoil	944
9.45	Wildflower Establishment	945

DIVISION II
CONSTRUCTION DETAILS

SECTION		SPECIFICATION NUMBER
9.49	Furnishing, Planting and Mulching Trees, Shrubs, Vines and Ground Cover Plants	949
9.50	Turf Establishment Erosion Control Matting	950
9.70	Trafficperson	970
9.73	Safety Patrol Service	973
9.75	Mobilization and Project Closeout	975
9.77	Traffic Cone	977
9.78	Traffic Drum	978
9.79	Construction Barricades	979
9.80	Construction Staking	980
9.81	42 Inch (1 Meter) Traffic Cone	981
10.00	General Clauses for Highway Illumination and Traffic Signal Projects	1000
10.01	Trenching and Backfilling	1001
10.10	Concrete Handhole	1010
11.13	Control Cable	1113
12.04	Sign Panel Overlay	1204
12.07	Sign Face – Extruded Aluminum	1207
12.08	Sign Face – Sheet Aluminum	1208
12.10	Epoxy Resin Pavement Markings	1210
12.20	Construction Signs	1220
18.00	General Clauses – Impact Attenuation Systems	1800
18.04	Type C and NC – Impact Attenuation Systems	1804
18.06	Type D Portable Impact Attenuation System	1806

January 2016

DIVISION III
MATERIALS SECTION

SECTION		SPECIFICATION NUMBER
M.03	Portland Cement Concrete	M03
M.04	Bituminous Concrete	M04
M.06	Metals	M06
M.08	Drainage	M08
M.11	Masonry Facing, Cement and Dry Rubble Masonry, Brick, Mortar	M11
M.13	Roadside Development	M13
M.16	Traffic Control Signals	M16
M.17	Elastomeric Materials	M17
M.18	Signing	M18

JANUARY 2016

STANDARD SPECIFICATIONS
FOR
ROADS, BRIDGES AND INCIDENTAL CONSTRUCTION
FORM 816

ERRATA

PG.	ARTICLE OR SUBARTICLE	LINE NO.	CORRECTION	REV. DATE
i	Table of Contents	20	Insert “1.11 Claims”	July10
ii	Table of Contents	2	Insert “2.11 Anti-Tracking Pad”	Jan16
ii	Table of Contents	7	Delete “2.18 Sedimentation Control Bales”	Jan16
ii	Table of Contents	9	Delete “3.02 Rolled Granular Base”	Jan16
ii	Table of Contents	10	Delete “3.03 Concrete Base”	Jan16
ii	Table of Contents	15	Delete “4.03 Cold Reclaimed Asphalt Pavement”	Jan16
ii	Table of Contents	17	Delete “4.14 Bituminous Surface Treatment”	Jan16
iii	Table of Contents	10	Insert “7.01 Drilled Shafts”	July14
iii	Table of Contents	15	Insert “7.06 Micropiles”	July14
iii	Table of Contents	20	Insert “7.16 Temporary Earth Retaining System”	Jan16
iii	Table of Contents	20	Insert “7.17 Earth Retaining System Left in Place”	Jan16
iii	Table of Contents	21	Delete “7.25 Bagged Stone”	Jan16
iii	Table of Contents	38	Delete “9.07 Barways”	Jan16
iv	Table of Contents	11	Change “Guild” to “Guide”	Jan05
iv	Table of Contents	13	Change “Concrete Sidewalks” to “Concrete Sidewalks and Ramps”	July15
iv	Table of Contents	21	Delete “9.41 Service Bridges”	Jan16
iv	Table of Contents	25	Delete “9.45 Wildflower Establishment”	Jan16
iv	Table of Contents	30	Change “Turf Establishment” to “Turf Establishment, Erosion Control Matting”	Jan16
iv	Table of Contents	36	Delete “9.73 Safety Patrol Service”	Jan16
v	Table of Contents	2	Change “Mobilization” to “Mobilization and Project Closeout”	July14
vi	Table of Contents	21	Change “Sign Face – Extruded Aluminum (Type III Reflective Sheeting)” to “Sign Face – Extruded Aluminum”	Jan15
vi	Table of Contents	25	Change “Epoxy Resin Pavement Markings, Symbols and Legends” to “Epoxy Resin Pavement Markings”	Jan16
vi	Table of Contents	33	Change “Construction Signs – Encapsulated Lens Type III Reflective Sheeting” to “Construction Signs”	Jan15
vii	Table of Contents	5	Delete “18.04 Type C and NC – Impact Attenuation Systems”	Jan16
164	2.04.03-1	2	Change “6.01.03-10” to “6.01.03-6”	Jan14
176	2.07.03	7	After the second sentence, add the following: “Acceptance of the material will be in accordance with Subarticle 2.02.03-6 for compaction.”	Jan16
203	3.05.05	21	Change “(t) to “(mton)”.....	Jan15
256	5.01.02	22	Change “DEP” to “DEEP”	Jan14
259	5.03.03	24	Change “Such requirements of Article 5.02.03 ... equally to this construction.” to “All such plans prepared by the Contractor shall be considered working drawings and shall be submitted	

PG.	ARTICLE OR SUBARTICLE	LINE NO.	CORRECTION	REV. DATE
			with engineering calculations to the Engineer for review in accordance with the requirements of Article 1.05.02.".....	July10
262	5.06.02	26	Change “Article M.03.01” to “Section M.03”.....	Jan14
262	5.06.02	27	Change “Article M.03.01” to “Section M.03”.....	Jan14
265	5.07.02	19	Change “Subarticle M.03.01-11” to “Article M.03.09”.....	Jan14
265	5.07.02	23	Change “Approved Products List for Geotextiles referred to in Subarticle M.08.01-26.” to “Qualified Products List referred to in Subarticle M.08.01-19 Geotextiles.”.....	July14
271	5.09.02	39	Change “M.06.02-12” to “M.06.02-4 Welded Stud Shear Connectors”.....	July10
272	5.13.02	22	Change “M.08.01-27” to “M.08.01-20 PVC Pipe or M.08.01-21 PVC Gravity Pipe”.....	July13
378	6.52.02	2	Change “M.08.01-22” to “M.08.01-11 Reinforced Concrete Culvert End”.....	July13
378	6.52.02	3	Change “M.08.01-23” to “M.08.01-6 Metal Culvert End”.....	July13
378	6.52.02	4	Change “gravel fill” to “granular fill”.....	Jan15
378	6.52.03	12	Change “gravel fill” to “granular fill”.....	Jan15
378	6.52.04	22	Change “gravel fill” to “granular fill”.....	Jan15
378	6.52.05	35	Change “gravel fill” to “granular fill”.....	Jan15
404	7.05.02	11	Change “Article M.03.01” to “Section M.03”.....	Jan14
414	7.28.05	4	Change “(t) to “(mton)”.....	Jan15
416	7.51.02-(4)	7	Change “M.08.01-26” to “M.08.01-19 Geotextiles”.....	July13
418	7.55.02	26	Change “M.08.01-26” to “M.08.01-19 Geotextiles”.....	July13
419	8.03.02	32	Change “Class 3” to “Curb Mix”.....	Jan16
419	8.03.03	37	Delete “3.02.03”.....	Jan16
425	8.15.02	17	Change “Class 3” to “Curb Mix”.....	Jan16
426	8.16.02	28	Change “Subarticle M.03.01-8” to “Article M.03.08”.....	Jan14
428	8.18.02	10	Change “Subarticle M.03.01-11” to “Article M.03.09”.....	Jan14
429	8.21.02-6	30	Change “M.03.01-11” to “Article M.03.09”.....	Jan14
430	8.21.03-6	37	Change “M.03.01-11” to “Article M.03.09”.....	Jan14
434	9.04.02	14	Change “Subarticle M.06.02-1” to “Article 6.03.02”.....	July10
434	9.04.02	15	Change “M.06.02-9(d) for metal bridge rail (cast post—aluminum)” to “Malleable castings shall conform to the requirements of the specifications for malleable iron castings, ASTM A 47, Grade No. 32510 (22010). Ductile iron castings shall conform to the Specifications for Ductile Iron Castings, ASTM A 536, Grade 60-40-18 (414-276-18) unless otherwise specified. In addition to the specified test coupons, test specimens from parts integral with the castings, such as risers, shall be tested for castings having a weight (mass) of more than 1000 pounds (455 kilograms) to determine that the required quality is obtained in the castings in the finished condition.”.....	July10
445	9.11.02	14	Change “Subarticle M.03.01-12” to “Article M.03.05”.....	Jan14
452	9.14.02	2	Change “Subarticle M.06.02-8” to “ASTM A 53, Type E or S, Grade A, Schedule 40 Black Finish.”.....	July10

PG.	ARTICLE OR SUBARTICLE	LINE NO.	CORRECTION	REV. DATE
452	9.14.02	4	Change “Subarticle M.06.02-9(d) except that the grade shall be 32510” to “the specifications for malleable iron castings, ASTM A 47, Grade No. 32510 (22010). Ductile iron castings shall conform to the Specifications for Ductile Iron Castings, ASTM A 536, Grade 60-40-18 (414-276-18) unless otherwise specified. In addition to the specified test coupons, test specimens from parts integral with the castings, such as risers, shall be tested for castings having a weight (mass) of more than 1000 lb. (455 kg) to determine that the required quality is obtained in the castings in the finished condition.”.....	July10
454	9.16.02	20	Change “Article M.03.01” to “Section M.03”.....	Jan14
461	9.22.02	30	Change “Class 2” to “lift thickness 1.25 or more = HMA S0.375”.....	Jan16
464	9.23.05	9	Change “ton (t)” to “ton (mton)”.....	Jan15
464	9.24.02-1	19	Change “Article M.03.01” to “Section M.03”.....	Jan14
465	9.25.02	29	Change “Class 3” to “Curb Mix”……..	Jan16
465	9.25.03	38	Delete “except that the following subarticles shall not apply: 1-Samples, 7-Paving Equipment, 8-Placing of Mixture,9-Compaction, 10-Surface Test of Pavement and 11-Joints.”..	Jan16
467	9.30.02	36	Change “reflective” to “retroreflective”.....	July15
467	9.30.02	39	Change “reflective” to “retroreflective”.....	July15
471	9.42.05	9	Change “(t)” to “(mton)”.....	Jan15
475	9.46.05	2	Change “(t)” to “(mton)”.....	Jan15
475	9.47.02-5	34	Change “Article M.03.01” to “Section M.03”.....	Jan14
517	10.00	21	Add “10.00.14—Maintenance of Illumination During Construction”.....	July14
518	10.00.03(2)	41	Change “pre-emotion” to “pre-emption”.....	July14
519	10.00.04	12	Capitalize “Section”.....	July14
519	10.00.04	18	Capitalize “Project”.....	July14
530	10.01.02	23	Change “Class 2” to “HMAS0.375 - for lift thickness 1.25 in or more”.....	Jan16
533	10.02.02	6	Change “Article M.03.01” to “Section M.03”.....	Jan14
533	10.02.02	7	Change “Class 2 Bituminous Concrete” to “HMAS0.375 – For lift thickness 1.25 in or more”…….....	Jan16
544	10.11.02	5	Change “M.08.01-25 or M.08.01-27” to “M.08.01-20 or M.08.01-21”.....	July13
548	10.17.03	14	Change “6.01.03-21” to “6.01.03-10”.....	Jan14
552	11.03.03-1	18	Change “M.03.01-12” to “M.03.05”.....	Jan14
561	11.11.03-2	23	Change “Class 1” to “HMAS0.5”.....	Jan16
566	11.13.03-2	29	Replace “MIL” with “MILSPEC”.....	July06
569	11.14.05	19	Change “Span Wire” to “Span Wire (Type)”.....	July12
576	12.01.02	40	Change “Subarticle M.03.01-12” to “Article M.03.05”.....	Jan14
577	12.01.03	7	Change “6.03.03-19” to “6.03.03-4 (f) High Strength Bolted Connections”.....	July10
577	12.01.03	23	Change “Article 6.03.03-15” to “Subarticle 6.03.03-4(c) Bearings”.....	July10

PG.	ARTICLE OR SUBARTICLE	LINE NO.	CORRECTION	REV. DATE
577	12.01.03	27	Change “Article 6.03.03-19 (c)(3)” to “Subarticle 6.03.03-4(f) High Strength Bolted Connections Turn-of-Nut Installation Method”.....	July10
578	12.02.02	23	Change “M.03.01-12” to “M.03.05”.....	Jan14
580	12.02.03	16	Change “6.01.03-21” to “6.01.03-10”.....	Jan14
583	12.05.01	10	Change “reflective” to “retroreflective”.....	July15
583	12.05.02	15	Change “Reflective” to “Retroreflective”.....	July15
583	12.05.02	16	Change “either Subarticle M.18.09.01 (Type V) or M.18.09.02” to “Article M.18.09”.....	Jan15
583	12.05.03	28	Change “reflective” to “retroreflective”.....	July15
583	12.05.04	35	Change “12.05.040” to “12.05.04”.....	July14
585	12.06.03	12	Change “9.45” to “9.50”.....	Jan16
598	12.12.02	1	Change “reflective” to “retroreflective”.....	July15
601	12.16.05	13	Change “100 pounds” to “10 pounds”.....	Jan16
601	12.16.05	17	Change “50 pounds” to “5 pounds”.....	Jan16
604	18.02.02	36	Change “Approved Products List” to “Qualified Products List”.....	July14
609	18.07.02	30	Change “M18” to “M.18”.....	July14
705	M.09.02-2	18	Change “Article M.09.02(1)” to “Subarticle M.09.02-1”.....	July14
708	M.09.02-5	5	Change “Article M.03.01” to “Section M.03”.....	Jan14
708	M.09.02-6	40	Change “Article M.03.01-2” to “Subarticle M.03.01-2”.....	July14
711	M.10.02-1	17	Change “Subarticle M.06.02-1(b)” to “Article M.06.02”.....	July10
713	M.10.02-7	8	Change “Article M.03.01” to “Section M.03”.....	Jan14
720	M.10.08-3	2	Change “Subarticle M.06.02-1(b)” to “Article M.06.02”.....	July10
720	M.10.08-4	10	Change “Article M.03.01” to “Section M.03”.....	Jan14
726	M.12.03	18	After “M.03.01” add “and M.03.02”.....	Jan14
731	M.12.08-3	20	Change “Article M.06.01-1” to “Subarticle M.06.01-1”.....	July14
748	M.14.01-3	42	Change “Article M.06.01-1” to “Subarticle M.06.01-1”.....	July14
749	M.14.01-4	2	Change “Article M.08.01-5” to “Subarticle M.08.01-5”.....	July14
749	M.14.01-7	22	Change “Article M.14.01-2” to “Subarticle M.14.01-2”.....	July14
749	M.14.01-8	32	Change “Article M.03.01-12” to “Article M.03.05”.....	Jan14
758	M.15.10	9	Change “Article M.15.09-1” to “Subarticle M.15.09-1”.....	July14
759	M.15.15-4	23	Change “Article M.16.03.2” to “Subarticle M.16.03-2”.....	July14
759	M.15.15-5	26	Change Article M.15.02.2” to “Subarticle M.15.02-2”.....	July14
759	M.15.15-5	24	Change “Article M.03.01” to “Section M.03”.....	Jan14
759	M.15.15-6	27	Change “Article M.03.01” to “Section M.03”.....	Jan14
760	M.15.15-16	21	Change “non-fusible” to “fused”.....	Jan05
821	Pay Items	22	Delete “4.06”.....	Jan16
822	Pay Items	44	Add “2.11, Anti-Tracking Pad, s.y. (s.m)”.....	Jan16
823	Pay Items	8	Delete “2.18, Sedimentation Control Bales, l.f. (m)”.....	Jan16
823	Pay Items	12	Delete “3.02, Rolled Granular Base, c.y. (cu.m)”.....	Jan16
823	Pay Items	14	Delete “3.03, Concrete for Base, c.y. (cu.m)”.....	Jan16
823	Pay Items	15	Delete “3.03”.....	Jan16
823	Pay Items	18	Delete “3.03”.....	Jan16
823	Pay Items	20	Delete “3.03”.....	Jan16
823	Pay Items	22	Delete “3.03”.....	Jan16

PG.	ARTICLE OR SUBARTICLE	LINE NO.	CORRECTION	REV. DATE
823	Pay Items	24	Delete “3.03”	Jan16
823	Pay Items	28	Change “ton (t)” to “ton (mton)”	Jan15
823	Pay Items	29	Change “ton (t)” to “ton (mton)”	Jan15
823	Pay Items	32	Delete “4.03, Cold Reclaimed Asphalt Pavement, s.y. (s.m.)”	Jan16
823	Pay Items	35	Delete “4.03, Additional Aggregate, ton (t)”	Jan16
823	Pay Items	39	Change “ton (t) “ to “c.y. (cu.m)”	Jan16
823	Pay Items	41	Change “ton (t)” to “ton (mton)”	Jan16
823	Pay Items	50	Change “ton (t)” to “ton (mton)”	Jan16
824	Pay Items	3	Change “Bituminous Concrete, Class ( ), ton (t)” to “HMA S*, ton”	Jan16
824	Pay Items	5	Change “Sawing and Sealing Joints, l.f. (m)” to PMA S*, ton”	Jan16
824	Pay Items	7	Change “Cleaning and Sealing Joints and Cracks, lb. (kg)” to “Bituminous Concrete Adjustment Cost, est.”	Jan16
824	Pay Items	12	Change “Cutting and Sealing Joint in the Bituminous Concrete Shoulder, l.f. (m)” to “Material Transfer Vehicle, ton”	Jan16
824	Pay Items	16	Delete “4.06, Kerf Cut in Bituminous Concrete Pavement, l.f. (m)”	Jan16
824	Pay Items	19	Delete “4.14, Bituminous Material for Surface Treatment, gal. (L)”	Jan16
824	Pay Items	22	Delete “4.14, Sand Cover for Bituminous Surface Treatment, s.y. (s.m)”	Jan16
824	Pay Items	30	Change “hr. (hr.)”to “”est. (est.)”	Jan16
825	Pay Items	25	Change “l.s. (l.s.)” to “ea. (ea.)”	Jan15
827	Pay Items	3	Delete “6.03, Structural Steel (Low Alloy), cwt. (kg)”	Jan16
827	Pay Items	5	Delete “6.03, Wrought Iron, lb. (kg)”	Jan16
827	Pay Items	7	Delete “6.03, Structural Steel Sign Support, cwt. (kg)”	Jan16
828	Pay Items	29	Add “7.01, Furnishing Drilled Shaft Drilling Equipment, l.s. (l.s.)”	July14
828	Pay Items	30	Add “7.01, Drilled Shaft (Diameter), l.f. (m)	July14
828	Pay Items	31	Add “7.01, Drilled Shaft Earth Excavation (Diameter), l.f. (m)”	July14
828	Pay Items	32	Add “7.01, Drilled Shaft Rock Excavation (Diameter), l.f. (m)”	July14
828	Pay Items	33	Add “7.01, Obstructions, hr. (hr.)”	July14
828	Pay Items	34	Add “7.01, Trial Drilled Shaft (Diameter), l.f. (m)”	July14
828	Pay Items	35	Add “7.01, Exploration Test Boring, l.f. (m)”	July14
828	Pay Items	36	Add “7.01, Permanent Casing (Diameter), l.f. (m)”	July14
828	Pay Items	37	Add “7.01, Access Tubes, l.f. (m)”	July14
829	Pay Items	4	Add “7.02, Dynamic Pile Driving Analysis (PDA) Test, ea. (ea.)”	July13
829	Pay Items	5	Add “7.02, Pre-Augering of Piles, l.f. (m)”	July13
829	Pay Items	13	Add “7.06, Micropiles, ea. (ea.)”	July14
829	Pay Items	14	Add “7.06, Verification Test for Micropiles, ea. (ea.)”	July14
829	Pay Items	15	Add “7.06, Proof Test for Micropiles, ea. (ea.)”	July14

PG.	ARTICLE OR SUBARTICLE	LINE NO.	CORRECTION	REV. DATE
829	Pay Items	16	Add “7.06, Micropile Length Adjustment, l.f. (m)”	July14
829	Pay Items	22	Add “7.16, Temporary Earth Retaining System, s.f. (s.m)”	Jan16
829	Pay Items	23	Add “7.17, Earth Retaining System Left in Place, s.f. (s.m)”	Jan16
829	Pay Items	23	Delete “7.25, Bagged Stone, c.f. (bag)”	Jan16
829	Pay Items	24	Change “ton (t)” to “ton (mton)”	Jan15
829	Pay Items	36	Change “ton (t)” to “ton (mton)”	Jan16
831	Pay Items	24	Delete “9.07, Barways, ea. (ea.)”	Jan16
833	Pay Items	14	Add “9.21, Concrete Sidewalk Ramp, s.f. (s.m)”	Jan16
833	Pay Items	15	Add “9.21, Detectable Warning Strip, ea. (ea.)”	Jan16
833	Pay Items	16	Add “9.21, Retrofit Detectable Warning Strip, ea. (ea.)”	Jan16
833	Pay Items	26	Change “ton (t)” to “ton (mton)”	Jan15
833	Pay Items	28	Delete “9.41, Service Bridge, ea. (ea.)”	Jan16
833	Pay Items	42	Change “ton (t)” to “ton (mton)”	Jan16
834	Pay Items	3	Delete “9.45, (Wildflower Name), lb. (kg)”	Jan16
834	Pay Items	4	Change “ton (t)” to “ton (mton)”	Jan15
834	Pay Items	21	Change “Erosion Control Matting” to “Erosion Control Matting (Type)”	Jan16
834	Pay Items	27	Change “Trafficperson” to “Trafficperson Municipal Police Officer)”	Jan16
834	Pay Items	27	Add “9.70, Trafficperson (Uniformed Flagger), hr. (hr.)”	Jan16
834	Pay Items	30	Delete “9.73, Safety Patrol Service, hr. (hr.)”	Jan16
835	Pay Items	3	Change “Mobilization” to “Mobilization and Project Closeout”	July14
837	Pay Items	24	Change “Span Wire” to “Span Wire (Type)”	July12
839	Pay Items	3	Change “Sign Face – Extruded Aluminum (Type III Reflective Sheeting)” to “Sign Face – Extruded Aluminum”	Jan15
840	Pay Items	6	Change “Construction Signs – Type III Reflective Sheeting” to “Construction Signs”	Jan15
840	Pay Items	12	Delete “18.04, Type NC Impact Attenuation System, ea. (ea.)”	Jan16
845	Index	6	Add page 133 to “Acceptance of Project”	Jan05
846	Index	13	Add page 107 to “Bids: Consideration of”	Jan05
847	Index	28	Add page 132 to “Cleaning Up, Final”	Jan05
849	Index	25	Add page 107 to “Consideration of Bids”	Jan05
849	Index	39	Add page 108 to “Contract: Intent of”	Jan05
850	Index	3	Add page 133 to “Contractor’s: Responsibility, Termination of the”	Jan05
850	Index	13	Add page 114 to “Cooperation by Contractor”	Jan05
850	Index	15	Add page 114 to “Coordination of Special Provisions, Plans, Supplemental Specifications and Standard Specifications and Other Contract Requirements”	Jan05
850	Index	40	Add page 128 to “Cutting and Patching:”	Jan05
852	Index	16	Add page 106 to “Examination of Plans, Specifications, Special Provisions and Site of Work”	Jan05
852	Index	38	Insert “Facilities, Temporary…126”	Jan05
853	Index	7	Add page 132 to “Final: Cleaning Up”	Jan05

PG.	ARTICLE OR SUBARTICLE	LINE NO.	CORRECTION	REV. DATE
854	Index	35	Add page 115 to “Inspection”.....	Jan05
855	Index	11	Add page 108 to “Intent of Contract”.....	Jan05
855	Index	22	Add page 106 to “Knowledge of Applicable Laws”.....	Jan05
855	Index	25	Add page 106 to “Laws: Knowledge of Applicable”.....	Jan05
856	Index	27	Add page 120 to “Materials: Source of Supply and Quality”....	Jan05
856	Index	28	Add page 121 to “Materials: Storage of”.....	Jan05
857	Index	33	Add page 133 to “Operation and Maintenance Manuals:”.....	Jan05
857	Index	34	Change page 133 to 136 for “Equipment and Systems Maintenance Manual”.....	Jan05
859	Index	2	Add page 131 to “Personnel and Equipment”.....	Jan05
860	Index	6	Add page 114 to “Plans: Coordination of Special Provisions, Supplemental Specifications and Standard Specifications and Other Contract Requirements”.....	Jan05
860	Index	7	Add page 106 to “Plans: Examination of”.....	Jan05
860	Index	30	Change page 108 to 112 for “Product Data”.....	Jan05
860	Index	31	Change page 108 to 112 for “Product Samples”.....	Jan05
860	Index	32	Add page 124 to “Product Selection:”.....	Jan05
861	Index	12	Add page 126 to “Prosecution of Work”.....	Jan05
861	Index	38	Change page 115 to 135 for “Record Drawings”.....	Jan05
863	Index	3	Add page 125 to “Sanitary Provisions”.....	Jan05
863	Index	18	Insert “Services, Temporary…126”.....	Jan05
863	Index	23	Add page 111 to “Shop Drawings”.....	Jan05
864	Index	4	Add page 106 to “Site of Work, Examination of”.....	Jan05
864	Index	12	Add page 120 to “Source of Supply and Quality”.....	Jan05
864	Index	19	Add page 114 to “Special Provisions: Coordination of Plans, Supplemental Specifications and Standard Specifications and Other Contract Requirements”.....	Jan05
864	Index	20	Add page 106 to “Special Provisions: Examination of”.....	Jan05
864	Index	26	Add page 114 to “Specifications: Coordination of Plans, Special Provisions and Other Contract Requirements”.....	Jan05
864	Index	27	Add page 106 to “Specifications: Examination of”.....	Jan05
864	Index	43	Add page 121 to “Storage”.....	Jan05
865	Index	27	Delete page 108 from “Submittals: Shop Drawings”.....	Jan05
865	Index	45	Insert “Temporary Utilities, Services, and Facilities…126”.....	Jan05
866	Index	2	Add page 133 to “Termination of Contractor’s Responsibility”.....	Jan05
866	Index	23	Insert “Training…137”.....	Jan05
866	Index	45	Add page 133 to “Utility Services”.....	Jan05
867	Index	8	Insert “Warranties…121”.....	Jan05
867	Index	24	Add page 126 to “Work: Prosecution of”.....	Jan05

CONNECTICUT
SUPPLEMENTAL SPECIFICATION
SECTION 1.01
DEFINITIONS OF TERMS AND PERMISSIBLE ABBREVIATIONS

1.01.01 — Definitions:

After the first sentence, add the following:

"Where appropriate, words in the singular form shall be deemed to include the plural, and words in the plural form to include the singular."

After the definition for "Award" *add the following definition:*

"**BID**: The submission of a proposal for the work contemplated."

After the definition of "Bid Advertisement" add the following definition:

"**BIDDER**: Any individual, firm, partnership, corporation, or combination thereof, submitting a proposal for the work contemplated, acting directly or through a duly authorized representative."

After the definition for "Calendar Day" *add the following definition:*

"**CATALOG CUT (PRODUCT DATA):** Document(s) with information such as manufacturer's product specifications, manufacturer's installation instructions, standard color charts, wiring diagrams showing factory-installed wiring, printed performance curves and operational range diagrams. Product data that must be specially prepared because standard printed data is not suitable shall be considered shop drawings."

After the definition for "Commissioner" *add the following definitions:*

"CONNECTICUT GUIDELINES FOR SOIL EROSION AND SEDIMENT CONTROL: This DEEP Bulletin is intended to provide information to government agencies and the public on soil erosion and sediment control.
http://www.ct.gov/deep/cwp/view.asp?a=2720&q=325660&deepNav_GID=1654%20
CONNECTICUT STORMWATER QUALITY MANUAL: This DEEP publication provides guidance on measures necessary to protect waters of the State from adverse impacts of post-construction stormwater runoff.
http://www.ct.gov/deep/cwp/view.asp?a=2721&q=325704&depNav_GID=1654%20-%20download "

Change the title of "**CONSTRUCTION ORDER**" *to* "**CONSTRUCTION ORDER, CHANGE ORDER**."

In the definition for "**CONTRACT**" *change* "the Department's "Standard Specifications for Roads, Bridges and Incidental Construction" *to* "the Department's Standard Specifications for Roads, Bridges, Facilities and Incidental Construction."

After the definition for "Contractor" *add the following definition:*

"CULVERT: A covered channel or a large pipe for carrying a watercourse below ground level, usually under a road or railway."

After the definition for "Laboratory" *add the following definition:*

"LIQUIDATED DAMAGES: The amount prescribed in the Contract specifications, to be paid to the State or to be deducted from any payments due or to become due the Contractor, for each day's delay in completing the whole or any specified portion of the work beyond the time allowed in the Contract specifications."

After the definition for "Material" *add the following definitions:*

"MUNICIPALITY: City, town or county.
NOTICE TO PROCEED: A written notice issued by the Engineer to the Contractor stating the date on which the Contractor is authorized to commence and proceed with the Contract work."

After the end of the definition for "Plans" *insert the following:*

"A. Standard Sheets – Standardized plans containing details approved by the Department and the FHWA, for construction of a given type on any project, included in contracts on an as-needed basis.

PRODUCT DATA (CATALOG CUT): Document(s) with information such as manufacturer's product specifications, manufacturer's installation instructions, standard color charts, wiring diagrams showing factory-installed wiring, printed performance curves and operational range diagrams Product data that must be specially prepared because standard printed data is not suitable shall be considered shop drawings."

After the definition for "Project Site" *add the following definition:*

"QUALIFIED PRODUCTS LIST (QPL): A report that has been developed as a means for determining what products, suppliers, manufacturers, equipment and methodologies may be used on construction projects. This report can be located on the CT Department of Transportation Website:
http://www.ct.gov/dot/cwp/view.asp?a=1387&q=259630 "

After the definition for "Reclaimed Waste" *add the following definition:*

"RIGHT-OF-WAY: A general term denoting land, property of interest therein, usually in a strip, acquired for or devoted to transportation purposes."

After the definition for “Subcontractor” a*dd the following definition:*

“**SUBSTANTIAL COMPLETION:** The date at which the performance of all work on the Project has been completed except minor or incidental items, final cleanup, work required under a warranty, and repair of unacceptable work, and provided the Engineer has determined that:

A. The Project is safe and convenient for use by the public, and
B. All traffic lanes including all safety appurtenances are in their final configuration, and
C. Failure to complete the work and repairs excepted above does not result in the deterioration of other completed work; and provided further, that the value of work remaining to be performed, repairs, and cleanup is less than one percent (1%) of the estimated final Contract amount, and
D. If applicable a Certificate of Compliance has been issued.”

1.01.02 — Abbreviations, Publications, and Standards:

Delete the entire Article and replace it with the following:

“ **1.01.02—Abbreviations, Publications and Standards:** Whenever one of the following abbreviations is used in the Contract, its meaning shall be interpreted as follows:

AA—(The) Aluminum Association, Inc.
AABC—Associated Air Balance Council
AAMA—American Architectural Manufacturers Association
AAPA—American Association of Port Authorities
AASHTO—American Association of State Highway and Transportation Officials: Wherever reference is made to an AASHTO Standard Method of Test or Standard Specification, it refers by letter and number to the method or specification published by AASHTO in the "Standard Specifications for Transportation Materials and Methods of Sampling and Testing". The edition governing the work shall be in effect on the date the Contract was advertised for solicitation of bids shall govern.
ABMA—American Bearing Manufacturers Association
ACGIH—American Council of Government Industrial Hygienists
ACI—ACI International (American Concrete Institute)
ACOE—Army Corps of Engineers
ADAAG—Americans with Disabilities Act (ADA) Accessibility Guidelines for Buildings and Facilities
ADSC—The International Association of Foundation Drilling (formerly Association of Drilled Shaft Contractors)
AF&PA—American Forest & Paper Association
AGA—American Gas Association
AGC—(The) Associated General Contractors of America
AHA—American Hardboard Association
AHAM—Association of Home Appliance Manufacturers
AI—Asphalt Institute
AIA—(The) American Institute of Architects
AISC—American Institute of Steel Construction
AISI—American Iron and Steel Institute

AITC—American Institute of Timber Construction
A.L.I.—Automotive Lift Institute
ALSC—American Lumber Standard Committee, Incorporated
AMCA—Air Movement and Control Association International, Inc.
AMRL—AASHTO Materials Reference Library
ANLA—American Nursery and Landscape Association
ANSI—American National Standards Institute
AOAC—AOAC International
AOSA—Association of Official Seed Analysts
APA—APA-The Engineered Wood Association
API—American Petroleum Institute
AREMA—American Railway Engineering and Maintenance-of-Way Association
ARI—Air-Conditioning & Refrigeration Institute
ARTBA—American Road and Transportation Builders Association
ASA—Acoustical Society of America
ASC—Adhesive and Sealant Council
ASCE—American Society of Civil Engineers
ASHRAE—American Society of Heating, Refrigerating and Air-Conditioning Engineers
ASME—ASME International (The American Society of Mechanical Engineers International)
ASNT—American Society for Non-Destructive Testing
ASSE—American Society of Sanitary Engineering
ASTM—American Society of Testing and Materials (ASTM International): Wherever reference is made to an ASTM specification, test method, or practice, it refers by letter, number, or both to standards published by ASTM International in the "ASTM Standards Source™ Database". The edition governing the work shall be in effect on the date the Contract was advertised for solicitation of bids shall govern.
ATSSA—American Traffic Safety Services Association
AWI—Architectural Woodwork Institute
AWPA—American Wood-Preservers' Association
AWPI—American Wood Preservers Institute
AWS—American Welding Society: Wherever reference is made to an AWS materials specification, inspection methods, or welding procedures, it refers by section number to standards of the American Welding Society published in the applicable steel, or aluminum welding code. The edition governing the work shall be in effect on the date the Contract was advertised for solicitation of bids shall govern.
AWWA—American Water Works Association
BHMA—Builders Hardware Manufacturers Association
BIA—(The) Brick Industry Association
BOCA—BOCA International, Inc.
CBM—Certified Ballast Manufacturers Association
CCRL—Cement and Concrete Reference Laboratory
CDA—Copper Development Association (The)
CFR—Code of Federal Regulations
CGA—Compressed Gas Association
CGS—Connecticut General Statutes (as revised)
CISCA—Ceilings and Interior Systems Construction Association
CISPI—Cast Iron Soil Pipe Institute CISPI—Cast Iron Soil Pipe Institute
CLFMI—Chain Link Fence Manufacturers Institute
ConnDOT—Connecticut Department of Transportation

CRI—(The) Carpet and Rug Institute
CRSI—Concrete Reinforcing Steel Institute
CSI—(The) Construction Specifications Institute
CSSB—Cedar Shake & Shingle Bureau
CTI—Cooling Technology Institute
DASMA—Door and Access Systems Manufacturers Association, International
~~DEP—Connecticut Department of Environmental Protection~~ *see DEEP*
DEEP—Connecticut Department of Energy and Environmental Protection
DHI—Door and Hardware Institute
DOD—Department of Defense Military Specifications and Standards
~~DPUC—Department of Public Utility Control~~ *see PURA*
EIA—Electronic Industries Alliance
EPA—Environmental Protection Agency
FAA—Federal Aviation Administration
FCC—Federal Communications Commission
FCICA—Floor Covering Installation Contractors Association
FHWA—Federal Highway Administration
FMG—FM Global
FRA—Federal Railway Administration
FS—Wherever reference is made to FS in the contract, it refers by number, letter, or both, to the latest standard or tentative standard of the Federal Specification Unit, General Services Administration, Federal Supply Service, as to materials, specifications, or methods of testing, whichever the case may be.
FTA—Federal Transit Administration
GA—Gypsum Association
GANA—Glass Association of North America
GSA—General Services Administration
HI—Hydraulics Institute
HPVA—Hardwood Plywood & Veneer Association
ICC—International Code Council
ICC-ES—ICC Evaluation Service, Inc.
ICEA—Insulated Cable Engineers Association, Inc.
IEC—International Electrotechnical Commission
IEEE—(The) Institute of Electrical and Electronics Engineers, Inc.
IES—Illuminating Engineers Society
IESNA—Illuminating Engineering Society of North America
IGCC—Insulating Glass Certification Council
IGMA—Insulating Glass Manufacturers Alliance
IMSA—International Municipal Signal Association
IRI—HSB Industrial Risk Insurers
ISO—International Organization for Standardization
ITE—Institute of Traffic Engineers
IUPAT—International Union of Painters and Allied Trades
IWRD—Inland Wetlands Resource Division
KCMA—Kitchen Cabinet Manufacturers Association
LMA—Laminating Materials Association
LPI—Lightning Protection Institute
MASH—Manual for Assessing Safety Hardware
MBMA—Metal Building Manufacturers Association
MILSPEC—Military Specification and Standards

MMA—Monorail Manufacturers Association
MSHA—Mine Safety and Health Administration
MSS—Manufacturers Standardization Society of The Valve and Fittings Industry, Inc.
MUTCD—Manual on Uniform Traffic Control Devices
NAAMM—National Association of Architectural Metal Manufacturers
NACE—National Association of Corrosion Engineers
NADCA—National Air Duct Cleaners Association
NAIMA—(The) North American Insulation Manufacturers Association (The)
NBFU—National Board of Fire Underwriters
NCHRP—National Cooperative Highway Research Program
NCMA—National Concrete Masonry Association
NCPI—National Clay Pipe Institute
NEAUPG—NorthEast Asphalt User/Producer Group
NEBB—Natural Environmental Balancing Bureau
NEC—National Electrical Code
NECA—National Electrical Contractors Association
NEMA—National Electrical Manufacturers Association
NEPCOAT—North East Protective Coatings Committee
NESC—National Electrical Safety Code
NETA—InterNational Testing Association
NETTCP—NorthEast Transportation Technician Certification Program
NFPA—National Fire Protection Association
NFRC—National Fenestration Rating Council
NHLA—National Hardwood Lumber Association
NICET—National Institute for Certification in Engineering Technologies
NIOSH—National Institute of Occupational Safety and Health
NIST—National Institute of Standards and Technology
NLGA—National Lumber Grades Authority
NOAA—National Oceanic and Atmospheric Administration
NRCA—National Roofing Contractors Association
NRMCA—National Ready-Mixed Concrete Association
NSC—National Safety Council
NSF-NSF International
NTMA—National Terrazzo and Mosaic Association, Inc.
OEO—Office of Equal Opportunity
OLISP—Office of Long Island Sound Programs
OSHA—Occupational Safety and Health Administration
PCA—Portland Cement Association
PCI—Precast/Prestressed Concrete Institute
PDI—Plumbing & Drainage Institute
PTI—Post-Tensioning Institute
PURA—Public Utilities Regulatory Authority
RFCI—Resilient Floor Covering Institute
RMA—Rubber Manufacturers Association
SAE—SAE International (formerly Society of Automotive Engineers)
SDI—Steel Deck Institute *or*
.....—Steel Door Institute
SFPA—Southern Forest Products Association
SHRP—Strategic Highway Research Program
SJI—Steel Joist Institute

SMACNA—Sheet Metal and Air Conditioning Contractors National Association
SPIB—(The) Southern Pine Inspection Bureau
SPRI—Single Ply Roofing Institute
SSPC—Where reference is made to SSPC in the Contract, it refers by number, letter, or both, to the latest standard or tentative standard specification of The Society for Protective Coatings, formerly the Steel Structures Painting Council, as to materials specifications, methods of testing, systems, procedures, inspection or other specification pertaining to any or all phases of cleaning or painting, whichever may apply.
SWRI—Sealant, Waterproofing, & Restoration Institute
TCA—Tile Council of America, Inc.
TIA—Telecommunications Industry Association
TIA/EIA—Telecommunications Industry Association/Electronics Industries Alliance
TPI—Truss Plate Institute, Inc.
TRB—Transportation Research Board
UFAS—Uniform Federal Accessibility Standards
UL—Underwriters Laboratories Inc.
USCG—United States Coast Guard
USDA—United States Department of Agriculture
USGBC—U.S. Green Building Council
USSWG—United States Steel Wire Gauge
WCLIB—West Coast Lumber Inspection Bureau
WCSC—Window Covering Safety Council
WDMA—Window & Door Manufacturers Association
WWPA—Western Wood Products Association”

1.01.03 — Abbreviations and Terms:

Revise the first two sentences as follows:

“ Abbreviations and terms used in the Contract are in lieu of and are to be construed in the same way as are the terms or phrases following them in the list below. Those abbreviations and terms include, but are not limited to:”

Add the following abbreviations:

ACSR—Aluminum Conductor, Steel Reinforced
AIC—Ampere Interrupting Current
AOEC—Area of Environmental Concern
APA—Aquifer Protection Area
AWG—American Wire Gauge
CAS—Coating Applicator Specialist
cu.dm—Cubic Decimeter
cu.m—Cubic Meters
CWI—Certified Welding Inspector
dm^3—Cubic Decimeter
DMT—Division of Materials Testing
DTI—Direct Tension Indicator
est.— estimated

FRC—Fiberglass Reinforced Composite
Gsa—Apparent specific gravity
Gsb—Bulk specific gravity
HASP—Health and Safety Plan
m^2—Square Meter
m^3—Cubic Meters
MSDS—Material Safety Data Sheet(s)
mton—Metric Ton
N.C.—National Coarse
NDT—non-destructive testing
PCC—Portland Cement Concrete
Pwa—Percent water absorbed
sq.m—Square Meter
SSA—Sole Source Aquifer
TDC—Transportation Division Chief
TL—Test Level
TMA—Truck Mounted Impact Attenuator
TMP—Transportation Management Plan
TTC—Temporary Traffic Control
VAC—Volts Alternating Current
VECP—Value Engineering Change Proposal
Vert. M—Vertical Meter
vert.m—Vertical Meter
VMS—Variable Message Sign
VOC—Volatile Organic Compound
WSA—Temporary Waste Stockpile Area

CONNECTICUT
SUPPLEMENTAL SPECIFICATION
SECTION 1.02
PROPOSAL REQUIREMENTS AND CONDITIONS

In the list of articles, make the following changes:

"1.02.02—Vacant
1.02.05—Vacant
1.02.06—Vacant
1.02.07—Vacant
1.02.08—Vacant
1.02.09—Vacant
1.02.10—Vacant
1.02.11—Vacant
1.02.14—Vacant
1.02.15—Vacant"

1.02.01 – Contract Bidding and Award:

Replace the entire article with the following:

"**1.02.01—Contract Bidding and Award:** All bids for construction contracts must be submitted electronically. It is the responsibility of each bidder and all other interested parties to obtain all bidding related information and documents from the Department of Administrative Services (DAS) State Contracting Portal.

Connecticut Department of Transportation bidding and other information and documents which are obtained from any other source must not be submitted to the Department. Reproduced, reformatted or altered forms of documents are not authorized or acceptable.

For information about the bidding and award of Department construction contracts, consult the "State of Connecticut Department of Transportation Construction Contract Bidding and Award Manual," available from the Division of Contracts and at the following link: http://www.ct.gov/dot/cwp/view.asp?a=2288&q=259258. In order to be eligible for award of a Department construction contract, a bidder must follow the requirements of this Bid Manual, and all bidding and award matters regarding Department construction contracts shall be governed by the terms of the Bid Manual, unless treated otherwise in the Contract, including these Specifications."

Replace "**1.02.02—Competence of Bidder:** See Article 1.02.01." *with* "**1.02.02—Vacant**"

Replace "**1.02.05—Preparation of Proposals:** See Article 1.02.01." *with* "**1.02.05—Vacant**"

Replace "**1.02.06—Rejection of Non-responsive Proposals:** See Article 1.02.01." *with* "**1.02.06—Vacant**"

Replace "**1.02.07—Proposal Guaranty:** See Article 1.02.01." *with* "**1.02.07—Vacant**"

Replace "**1.02.08—Delivery of Proposal:** See Article 1.02.01." *with* "**1.02.08—Vacant**"

Replace "**1.02.09—Withdrawal of Proposals:** See Article 1.02.01." *with* "**1.02.09—Vacant**"

Replace "**1.02.10—Public Opening of Proposals:** See Article 1.02.01." *with* "**1.02.10—Vacant**"

Replace "**1.02.11—Miscellaneous Grounds for Rejection of Proposals:** See Article 1.02.01." *with* "**1.02.11—Vacant**"

Replace "**1.02.14—Sworn Statement by Bidder:** See Article 1.02.01." *with* "**1.02.14—Vacant**"

Replace "**1.02.15—Required Certifications of Eligibility to Bid:** See Article 1.02.01." *with* "**1.02.15—Vacant**"

CONNECTICUT
SUPPLEMENTAL SPECIFICATION
SECTION 1.03
AWARD AND EXECUTION OF CONTRACT

Replace Article 1.03.07 in its entirety with the following:

1.03.07—Insurance:

Coverage shall be on a primary basis.

The Contractor shall carry and maintain at all times during the term of the Contract the insurance coverages required by this Article and any additional coverages(s) or higher minimum insurance coverage amount(s) required by the Special Provisions of the Contract.

If the Project includes work on or adjacent to railroad property additional insurance may be required as specified by the railroad. Please refer to the Special Provisions for any additional insurance requirements by the railroad.

1. **Worker's Compensation Insurance:** With respect to all operations the Contractor performs and all those performed for it by subcontractors, the Contractor shall carry, and require each subcontractor to carry, Workers' Compensation insurance as required by the laws of the State of Connecticut.

Employer's Liability insurance shall be provided in amounts not less than $100,000 per accident for bodily injury by accident; $100,000 policy limit by disease and $100,000 per employee for bodily injury by disease. Each Workers' Compensation policy shall contain the U.S. Longshoreman's and Harbor Workers' Act endorsement when work is to be performed over or adjacent to navigable water.

2. **Commercial General Liability Insurance:** With respect to the operations the Contractor performs and also those performed for it by subcontractors, the Contractor shall carry, and require each subcontractor to carry, Commercial General Liability insurance, including Contractual Liability, Products and Completed Operations, Broad Form Property Damage and Independent Contractors.

Products and completed operations insurance for ongoing and completed operations shall be maintained for a period of one (1) year after the acceptance of the project by the Department in accordance with Article 1.08.14. See chart below for applicable minimum coverage amounts.

Contract Amount ($)	Minimum Single Occurrence Amount ($)	Minimum Annual Aggregate Amount ($)
0-2,000,000	1,000,000	2,000,000
>2,000,001-10,000,000	2,000,000	4,000,000
>10,000,000	4,000,000	8,000,000

In Facilities construction projects, if underground work is to be undertaken, each policy shall have coverage for and exclusions removed for “Explosion, Collapse and Underground” (“XCU”).

3. **Automobile Liability Insurance:** The Contractor shall obtain automobile liability insurance covering the operation of all motor vehicles, including those hired or borrowed, that are used in connection with the Project for all damages arising out of: (1) bodily injury to or death of all persons and/or (2) injury to or destruction of property; in any one accident or occurrence. This policy shall not be subject to an annual aggregate limitation. See chart above for applicable minimum coverage amounts.

4. **Owner’s and Contractor’s Protective Liability Insurance for and in the Name of the State:** With respect to the Contractor’s Project operations and also those of its subcontractors, the Contractor shall carry, for and on behalf of the State for each accident or occurrence resulting in damages from (1) bodily injury to or death of persons and/or (2) injury to or destruction of property. See chart below for applicable minimum coverage amounts.

Contract Amount ($)	Minimum Single Occurrence Amount ($)	Minimum Annual Aggregate Amount ($)
0 - 20 Million	1,000,000	1,000,000
20 Million - 50 Million	2,000,000	2,000,000
> 50 Million	4,000,000	4,000,000

5. **Railroad Protective Liability Insurance:** When the Contract involves work within fifty (50) feet of the railroad right-of-way or State-owned rail property, with respect to Project operations and also those of its subcontractors, the Contractor shall carry Railroad Protective Liability Insurance providing coverage of at least $2,000,000 for each accident or occurrence resulting in damages from (1) bodily injury to or death of all persons and/or (2) injury to or destruction of property, and subject to that limit per accident or occurrence, an aggregate coverage of at least $6,000,000 for all damages during the policy period, and with all entities falling within any of the following listed categories named as insured parties: (i) the owner of the railroad right-of-way, (ii) the owner of any railcar licensed or permitted to travel within that affected portion of railroad right-of-way, and (iii) the operator of any railcar licensed or permitted to travel within that affected portion of the railroad right-of-way, and with the State, if not falling within any of the above-listed categories, also named as an insured party.

6. **Blasting:** When explosives are to be used in the Project, the Commercial General Liability insurance policy shall include XCU coverage, in the same limits as the per occurrence policy limits.

7. **Protection and Indemnity Insurance for Marine Construction Operations in Navigable Waters:**

If a vessel of any kind will be involved in Project work, the Contractor shall obtain the following additional insurance coverage:

A. Protection and Indemnity Coverage of at least $300,000 per vessel or equal to at least the value of hull and machinery, whichever is greater.

B. If there is any limitation or exclusion with regard to crew and employees under the protection and indemnity form, the Contractor must obtain and keep in effect throughout the Project a workers' compensation policy, including coverage for operations under admiralty jurisdiction, with a limit of liability of at least $300,000 per accident or a limit equal to at least the value of the hull and machinery, whichever is greater, or for any amount otherwise required by statute.

8. **Builder's Risk Insurance:** For Facilities construction projects, the Contractor shall maintain comprehensive replacement cost builder's risk (completed value) insurance providing coverage for the entire work at the Project site, including all fixtures, machinery and equipment, any heating, cooling and constituting a permanent part of the building and shall cover portions of work located away from the site, but intended for use at the site. If it is determined that all or a portion of the project is located within an area designated as a Special Flood Hazard Area, the Contractor shall maintain flood insurance (no less than $10,000,000 sublimit). The State of Connecticut shall be named as Loss Payee. Equipment breakdown coverage may be sub limited to 50% of the project cost.

9. **Architects and Engineer's Professional Liability Insurance for Structural Engineer:** If required, limits will be specified in Article 1.03.07 of the Special Provisions of the Contract or Article 1.05.02.

10. **Umbrella Liability Insurance:** The Contractor may satisfy the minimum limits required for Commercial General Liability and Automobile Liability Insurance using Umbrella Liability Insurance. In the event that the Contractor obtains Umbrella Liability Insurance to meet the minimum coverage requirements for Commercial General Liability or Automobile Liability Insurance coverage, the Umbrella Liability Insurance policy shall have an annual aggregate at a limit not less than twice the single occurrence and must specifically endorse the State of Connecticut as an additional insured. Specifically for Bridge Projects with a low bid equal to or higher than $80,000,000, the Umbrella Liability Insurance policy must have a minimum limit of at least $25,000,000.

11**.** **Certificate of Insurance:** Before the Contract is executed, the Contractor must provide to the Department a certificate of insurance acceptable to the Commissioner and executed by an insurance company or companies satisfactory to the State of Connecticut for the insurance coverage(s) required by this Article and the Special

Provisions of the Contract. The Contractor shall maintain the required insurance coverage during the entire term of the Contract. The certificate of insurance must clearly include the name of the insured and identify the project for which it is being issued.

12. **Copies of Policies:** The Contractor shall provide, within five (5) business days, a copy or copies of all applicable insurance policies when requested by the State. In providing said policies, the Contractor may redact provisions of the policy that are proprietary. This provision shall survive the expiration or termination of the Contract.

13. **Sovereign Immunity:** The Contractor may not assert the defense of sovereign immunity in the adjustment of claims or in the defense of any claim or suit brought against the Contractor or the State, unless the State, in writing, requests that the Contractor do so or consents to its doing.

14. **Contractor Assumes Costs:** The Contractor shall assume and pay all costs and billings for premiums, deductibles, self-insured retentions and audit charges earned and payable under the required insurance.

15. **State Named as Additional Insured:** The State must be named as an additional insured party for the Commercial General Liability and Automobile Liability insurance policies required by this Article and the Special Provisions to the Contract, and any Umbrella Liability Insurance, as applicable, obtained in accordance with this Article. Each policy shall waive right of recovery (waiver of subrogation) against the State of Connecticut.

16. **Termination or Change of Insurance:**

A. The Contractor shall notify the Department of any cancelation of insurance carrier or change to the required insurance coverage by submitting a new insurance certificate to the Department immediately following said cancelation or change in required coverage.

B. It is the responsibility of the Contractor to maintain evidence of a current insurance coverage with the Department for the duration of contract. It is the responsibility of the Contractor to file with the Department all renewals and new certificates of insurance issued due to changes in policy terms or changes in insurance carriers prior to the expiration dates on the forms already on file with the Department.

17. **Duration of Coverage**. The Contractor shall keep all the required insurance in continuous effect until the date that the Department designates for the termination of the Contractor's responsibility, as defined by Article 1.08.14.

18. **Compensation:** There shall be no direct compensation allowed the Contractor on account of any premium or other charge necessary to obtain and keep in effect any insurance or bonds in connection with the Project, but the cost thereof shall be considered included in the general cost of the Project work.

CONNECTICUT
SUPPLEMENTAL SPECIFICATION
SECTION 1.05
CONTROL OF THE WORK

In the list of Articles, replace "**1.05.02—Plans, Working Drawings and Shop Drawings**" *with* "**1.05.02—Plans, Working Drawings, Shop Drawings, Product Data, Submittal Preparation and Processing, and Designers Action**"

Replace "**1.05.08—Vacant**" *with* "**1.05.08—Schedules and Reports**"

After "**1.05.16—Dimensions and Measurements**" *add* "**1.05.17—Welding**"

1.05.01—Authority of Engineer

In the second sentence of the third paragraph, change "Connecticut General Statutes" *to* "CGS."

1.05.02—Plans, Working Drawings and Shop Drawings

Delete the entire Article and replace it with the following:

1.05.02—Plans, Working Drawings, Shop Drawings, Product Data, Submittal Preparation and Processing, and Designers Action:

1. Plans: The plans prepared by the Department show the details necessary to give a comprehensive idea of the construction contemplated under the Contract. The plans will generally show location, character, dimensions, and details necessary to complete the Project. If the plans do not show complete details, they will show the necessary dimensions and details, which when used along with the other Contract documents, will enable the Contractor to prepare working drawings, shop drawings or product data necessary to complete the Project.

2. Working Drawings: When required by the Contract, or when ordered to do so by the Engineer, the Contractor shall prepare and submit six printed copies and one electronic copy in a pdf file format of the working drawings, signed, sealed and dated by a qualified Professional Engineer licensed to practice in the State of Connecticut, for review. The drawings shall be submitted to the Assistant District Engineer sufficiently in advance of the work detailed, to allow for their review in accordance with the review periods specified in Subarticle 1.05.02-5 (including any necessary revisions, resubmittal, and final review).

There will be no direct payment for furnishing any working drawings, procedures or supporting calculations, but the cost thereof shall be considered as included in the general cost of the work.

a. Working Drawings for Permanent Construction: Drawings shall be submitted on 22 in x 34 in (559 mm x 864 mm) sheets with a border and title block similar to the Department standard. Calculations, procedures and other supporting data may be submitted in an 8-1/2 in x 11 in (216 mm x 279 mm) format.

   The Contractor shall supply to the Assistant District Engineer a certificate of insurance in accordance with Article 1.03.07 at the time that the working drawings for the Project are submitted.

   The Contractor's designer, who prepares the working drawings, shall secure and maintain at no direct cost to the State a Professional Liability Insurance Policy for errors and omissions in the minimum amount of $2,000,000 per error or omission. The Contractor's designer may elect to obtain a policy containing a maximum

$250,000 deductible clause, but if the Contractor's designer should obtain a policy containing such a clause, they shall be liable to the extent of at least the deductible amount. The Contractor's designer shall obtain the appropriate and proper endorsement of its Professional Liability Policy to cover the indemnification clause in this Contract, as the same relates to negligent acts, errors or omissions in the Project work performed by them. The Contractor's designer shall continue this liability insurance coverage for a period of (1) 3 years from the date of acceptance of the work by the Engineer, as evidenced by a State of Connecticut, Department of Transportation Form Number CON-500, entitled "Certificate of Acceptance of Work," issued to the Contractor; or (2) 3 years after the termination of the Contract, whichever is earlier, subject to the continued commercial availability of such insurance.

b. Working Drawings for Temporary Construction: The Contractor shall submit drawings, calculations, procedures and other supporting data in a format acceptable to the Assistant District Engineer.

3. Shop Drawings: When required by the Contract, or when ordered to do so by the Engineer, the Contractor shall prepare and submit six printed copies and one electronic copy in a pdf file format of the shop drawings to the Designer for review. Review timeframes and submission locations are specified in Subarticle 1.05.02-5.

Drawings shall be submitted on 22 in x 34 in (559 mm x 864 mm) sheets with an appropriate border and with a title block in the lower right-hand corner of each sheet. Procedures and other supporting data may be submitted on 8½ in x 11 in (216 mm x 279 mm) sheets.

There will be no direct payment for furnishing any shop drawings, but the cost thereof shall be considered as included in the general cost of the work.

4. Product Data: When required by the Contract, or when ordered to do so by the Engineer, the Contractor shall prepare and submit six printed copies and one electronic copy in a pdf file format of the product data.

The product data shall be submitted to the Designer for review, sufficiently in advance of the work detailed, to allow for their review in accordance with the review periods specified in Subarticle 1.05.02-5 (including any necessary revisions, resubmittal, and final review), and acquisition of materials, without causing a delay of the Project.

The Contractor shall submit the product data in a single submittal for each element of construction.

The Contractor shall mark each copy of the product data submittal to show applicable choices and options. Where product data includes information on several products that are not required, copies shall be marked to indicate the applicable information. Product data shall include the following information and confirmation of conformance with the Contract to the extent applicable: manufacturer's printed recommendations, compliance with recognized trade association standards, compliance with recognized testing agency standards, application of testing agency labels and seals, notation of coordination requirements, Contract item number, and any other information required by the individual Contract provisions.

There will be no direct payment for furnishing any product data, but the cost thereof shall be considered as included in the general cost of the work.

5. Submittal Preparation and Processing – Review Timeframes: The Contractor shall allow 30 calendar days for submittal review by the Department, from the date of receipt of printed copies in the appropriate Designer or Engineer's office. For any submittals marked with "Revise and Resubmit" or "Rejected," the Department is allowed an additional 20 calendar days for review of any resubmissions.

An extension of Contract time will not be authorized due to the Contractor's failure to transmit submittals sufficiently in advance of the work to permit processing.

The furnishing of shop drawings, working drawings or product data, any comments or suggestions by the Designer or Engineer concerning shop drawings, working drawings or product data, shall not relieve the Contractor of any of its responsibility for claims by the State or by third parties, as per Article 1.07.10.

The furnishing of the shop drawings, working drawings and product data shall not serve to relieve the Contractor of any part of its responsibility for the safety or the successful

completion of the Project construction.

Submissions: Unless otherwise defined in the Contract, the Contractor shall transmit the working drawings, shop drawings and product data as follows:

(a) Working drawings for permanent construction, shop drawings, and product data shall be submitted to the Designer. A copy of the transmittal or cover letter shall be forwarded to the Assistant District Engineer of the administering Construction District.

(b) Working drawings for temporary construction shall be submitted to the Assistant District Engineer of the administering Construction District.

(c) If not provided in the Contract, the Contractor shall request a list detailing the delivery location and contact person for each type of submittal, from the administering Construction District.

6. Designers Action: The Designer or Engineer will review each submittal, mark each with a uniform, self-explanatory action stamp, and return the stamped submittal promptly to the Contractor. The Contractor shall not proceed with the part of the Project covered by the submittal until the submittal is marked “No Exceptions Noted” or “Exceptions as Noted” by the Designer or Engineer. The Contractor shall retain sole responsibility for compliance with all Contract requirements. The stamp will be marked as follows to indicate the action taken:

(a) If submittals are marked “No Exceptions Noted,” the Designer or Engineer has not observed any statement or feature that appears to deviate from the Contract requirements. This disposition is contingent on being able to execute any manufacturer’s written warranty in compliance with the Contract provisions. The Contractor may proceed with the work covered in the submittal.

(b) If submittals are marked “Exceptions as Noted” the considerations or changes noted by the Designer or Engineer are necessary in order for the submittal to comply with Contract requirements. The Contractor shall review the required changes and inform the Designer or Engineer if they feel the changes violate a provision of the Contract or would lessen the warranty coverage.

(c) If submittals are marked “Revise and Resubmit,” the Contractor shall revise the submittals to address the deficiencies or provide additional information as noted by the Designer or Engineer. The Contractor shall allow an additional review period as specified in Subarticle 1.05.02-5.

(d) If submittals are marked “Rejected,” the Contractor shall prepare and submit a new submittal in accordance with the Designer’s or Engineer’s notations. The resubmissions require an additional review and determination by the Designer or Engineer. The Contractor shall allow an additional review period as specified in Subarticle 1.05.02-5.”

1.05.05—Cooperation by Contractor:

After the second paragraph, add the following:

“ Voluntary Partnering: The Connecticut Department of Transportation ("Department") wants to establish a cohesive partnership with the Contractor and its principal subcontractors on the Project, so that the partnership can draw on the strengths of each organization in order to identify and pursue the partners' mutual Project goals. Chief among those will be the effective and efficient completion of the Project, within budget, on schedule, and in accordance with applicable plans, specifications, and other Contract provisions.

If the Contractor believes at any point before or during Project construction that the creation of formal partnering between itself and the Department, with the use of a third-party facilitator, would help the Contractor and the Department ("Partners") to reach these goals, the Contractor may submit a written request to the District Engineer of the District in which the Project will be constructed for the establishment of formal partnering between the Parties. If the Contractor makes such a request, the Department will engage in that partnering.

Any costs incurred by the Partners jointly in connection with Project partnering activities, to the extent that those costs are recognized as legitimate and appropriate by both Partners, will be shared equally between them. Any other costs incurred because of partnering activities will be borne by the Partner that incurred them.

If the Contractor and the Department decide to pursue a formal partnering initiative, the Contractor and The Department will arrange first to meet in order to select a third-party partnering facilitator and to plan a partnering development and team-building workshop. After they agree upon the services to be performed by the facilitator and the range of compensation for the facilitator that would be acceptable to them, the Contractor will contract accordingly for the services of said facilitator. The Department will reimburse the Contractor for fifty percent (50%) of the payments made under that contract, so long as the activities paid for were appropriate and within the contemplation of the Partners.

At the Partners' initial partnering meeting, the Partners will also determine who should attend the first partnering workshop, what the workshop's agenda will be, how long the workshop should last, and when and where it will be held. Unless the Partners agree otherwise, attendance at the first partnering workshop will be mandatory for the Department's District Engineer for the Project and the Department's other key Project personnel, the Contractor's on-Site Project manager and other key supervisory Project personnel, and, if the Contractor agrees to it, the key supervisory personnel of the Contractor's principal Project subcontractors. The Partners will also request that the Project design engineers and key local government personnel send Regional/District and Corporate/State-level managers to the workshop and direct them to participate in Project partnering activities as and when requested to do so by the Partners.

With the agreement of the Partners, follow-up Project partnering workshops will be held periodically until the Department closes out the Contract.

If the Partners agree on a formal partnering charter for the Project, the establishment of that charter will not change the legal relationship of the Partners to the Contract; it will not alter, supplement, or eliminate any of the Partners' rights or obligations under the Contract."

1.05.08–Vacant

Replace with the following:

"**1.05.08—Schedules and Reports:**

When a project coordinator is not required by the Contract the following shall apply:

Baseline Bar Chart Construction Schedule: Within 20 calendar days after contract award the Contractor shall develop a comprehensive bar chart as a baseline schedule for the project. The bar chart schedule shall be submitted to the Engineer for approval and shall be based on the following guidelines:

1. The bar chart schedule shall contain a list of activities that represents the major activities of the project. At a minimum, this list should include a breakdown by individual structure or stage, including major components of each. The bar chart schedule shall contain sufficient detail to describe the progression of the work in a comprehensive manner. As a guide, 10 to 15 bar chart activities should be provided for each $1 million of contract value.

The following list is provided as an example only and is not meant to be all-inclusive or all-applicable:

Project Constraints

-Winter shutdowns
-Environmental permits/application time of year restrictions
-Milestones
-Third Party approvals
-Long lead time items (procurement and fabrication of major elements)

-Adjacent Projects or work by others
Award
Notice to Proceed
Signing (Construction, temporary, permanent by location)
Mobilization
Permits as required
Field Office
Utility Relocations
Submittals/shop drawings/working drawings/product data
Construction of Waste Stock pile area
Clearing and Grubbing
Earthwork (Borrow, earth ex, rock ex etc.)
Traffic control items (including illumination and signalization)
Pavement markings
Roadway Construction (Breakdown into components)
Drainage (Breakdown into components)
Culverts
Plantings (including turf establishment)
Semi-final inspection
Final Cleanup

As required the following may supplement the activities listed above for the specific project types indicated:

a. For bridges and other structures, include major components such as abutments, wingwalls, piers, decks and retaining walls; further breakdown by footings, wall sections, parapets etc.
   Temporary Earth Retention Systems
   Cofferdam and Dewatering
   Structure Excavation
   Piles/test piles
   Temporary Structures
   Removal of Superstructure
   Bearing Pads
   Structural Steel (Breakdown by fabrication, delivery, installation, painting etc.)
   Bridge deck
b. Multiple location projects such as traffic signal, incident management, lighting, planting and guiderail projects will be broken down first by location and then by operation. Other major activities of these types of projects should include, but are not limited to:
   Installation of anchors
   Driving posts
   Foundations
   Trenching and Backfilling
   Installation of Span poles/mast arms
   Installation of luminaries
   Installation of cameras
   Installation of VMS
   Hanging signal heads
   Sawcut loops
   Energizing equipment

c. Facility Projects – Facilities construction shall reflect the same breakdown of the Project as the Schedule of Values:
Division 2 – Existing Conditions
Division 3 – Concrete
Division 4 – Masonry
Division 5 – Metals
Division 6 – Wood, Plastic, and Composites
Division 7 – Thermal and Moisture Protection
Division 8 – Openings
Division 9 – Finishes
Division 10 – Specialties
Division 11 – Equipment
Division 12 - Furnishings
Division 13 – Special Construction
Division 14 – Conveying Equipment
Division 21 – Fire Suppression
Division 22 – Plumbing
Division 23 – Heating, Ventilating, and Air Conditioning
Division 26 – Electrical
Division 27 – Communications
Division 28 – Electronic Safety and Security
Division 31 – Earthwork
Division 32 – Exterior Improvements
Division 33 - Utilities

2. If the Engineer determines that additional detail is necessary, the Contractor shall provide it.
3. Each activity shall have a separate schedule bar. The schedule timeline shall be broken into weekly time periods with a vertical line to identify the first working day of each week.
4. The bar chart schedule shall show relationships among activities. The critical path for the Project shall be clearly defined on the schedule. The schedule shall show milestones for major elements of work, and shall be prepared on a sheet, or series of sheets of sufficient width to show data for the entire construction period.
5. If scheduling software is used to create the bar chart schedule, related reports such as a predecessor and successor report, a sort by total float, and a sort by early start shall also be submitted.
6. Project activities shall be scheduled to demonstrate that the construction completion date for the Project will occur prior to expiration of the Contract time. In addition, the schedule shall demonstrate conformance with any other dates stipulated in the Contract.
7. The Contractor is responsible to inform its subcontractor(s) and supplier(s) of the project schedule and any relevant updates.
8. There will be no direct payment for furnishing schedules, the cost thereof shall be considered as included in the general cost of the work.
9. For projects without a Mobilization item, 5% of the Contract value will be withheld until such time as the Baseline Schedule is approved.

Monthly Updates: No later than the 10th day of each month, unless directed otherwise by the Engineer, the Contractor shall deliver to the Engineer 3 copies of the schedule to show the work actually accomplished during the preceding month, the

actual time spent on each activity, and the estimated time needed to complete any activity which has been started but not completed. Each time bar shall indicate, in 10% increments, the estimated percentage of that activity which remains to be completed. As the Project progresses, the Contractor shall place a contrasting mark in each bar to indicate the actual percentage of the activity that has been completed.

The monthly update shall include revisions of the schedule necessitated by revisions to the Project directed by the Engineer (including, but not limited to extra work), during the month preceding the update. Similarly, any changes of the schedule required due to changes in the Contractor's planning or progress shall also be included. The Engineer reserves the right to reject any such revisions. If the schedule revisions extend the Contract completion date, due to extra or added work or delays beyond the control of the Contractor, the Contractor shall submit a request in writing for an extension of time in accordance with Article 1.08.08. This request shall be supported by an analysis of the schedules submitted previously.

Any schedule revisions shall be identified and explained in a cover letter accompanying the monthly update. The letter shall also describe in general terms the progress of the Project since the last schedule update and shall identify any items of special interest.

If the Contractor fails to provide monthly schedule updates, the Engineer has the right to hold 10% of the monthly estimated payment, or $5,000, whichever is less, until such time as an update has been provided in accordance with this provision.

Biweekly Schedules: Each week, the Contractor shall submit to the Engineer a 2 week look-ahead schedule. This short-term schedule may be handwritten but shall clearly indicate all work planned for the following 2 week period.

Recovery Schedules: If the updated schedule indicates that the Project has fallen behind schedule, the Contractor shall either submit a time extension request in accordance with 1.08.08 or immediately institute steps acceptable to the Engineer to improve its progress of the Project. In such a case, the Contractor shall submit a recovery plan, as may be deemed necessary by the Engineer, to demonstrate the manner in which an acceptable rate of progress will be regained."

1.05.09–Authority of Inspectors:

Delete the second paragraph.

1.05.10–Inspection:

Replace the first paragraph with the following:

" All materials and each part or detail of the Project work shall be subject at all times to inspection by the Engineer. Such inspection may take place on the Site or at an offsite location, such as a mill, subcontractor fabrication plant or shop, or other type of location. The Engineer shall be allowed access to all parts of the work and shall be furnished with such information and assistance by the Contractor as the Engineer deems necessary to make complete, detailed, and timely inspections. Inspection reports may include written observations, sketches, and photographs as deemed appropriate by the inspector. The

Contractor shall allow the Engineer to collect such information without restriction on the Site and shall ensure that the Engineer will have the same unrestricted ability to gather such pertinent information regarding Project work or materials at a location controlled by a subcontractor or supplier of the Contractor."

In the first sentence of the second paragraph, replace "on the Project" *with* "on the Project site"

After the second paragraph, add the following paragraph:

" The Contractor shall provide the Engineer the name(s), contact information, and location(s) of any subcontractor(s) fabricating materials or components outside the Project limits for permanent incorporation into the Project. The Contractor shall provide such information sufficiently in advance of such fabrication to allow the Engineer to schedule inspections of said fabrication, and the Contractor shall ensure that such work does not commence until it has confirmed that the Engineer has arranged for adequate inspection at the offsite location(s). Any such work done without inspection by a Department representative may be ordered exposed for examination and testing. If the Engineer then judges that the work requires correction or restoration, the Contractor shall perform such remedial work at its own expense."

After the last paragraph, add the following paragraph:

" The fact that the Engineer may have conducted or failed to conduct, or conducted insufficiently or inaccurately, any inspection of Project work will not relieve the Contractor of its responsibility to perform the Project work properly, to monitor its work and the work of its subcontractors, and to institute and maintain quality control procedures appropriate for the proper execution of Project work."

1.05.12–Payrolls:

Replace the first paragraph with the following:

" For each week of the Project from the first week during which an employee of the Contractor does Project work to which prevailing wage requirements apply, until the last week on which such an employee does such work, the Contractor shall furnish to the Engineer certified copies of payrolls showing:

(a) the names of the employees who worked on the Project and whose work is subject to prevailing wage requirements,
(b) the specific days and hours and numbers of hours that each such employee worked on the Project, and
(c) the amount of money paid to each such employee for Project work.

Each such payroll shall include the statement(s) of compliance with prevailing wage laws required by the State of Connecticut and, if applicable, by the Federal government. Said payrolls must contain all information required by Connecticut General Statutes Section 31-53 (as it may be revised). For contracts subject to Federal prevailing wage requirements, each payroll shall also contain the information required by the Davis Bacon and Related Acts (DBR). All of the payroll requirements in this Article shall also apply to the work of any subcontractor or other party that performs work on the Project

site, and the Contractor shall be responsible for ensuring that each such party meets said requirements."

1.05.15–Markings for Underground Facilities:

Replace the beginning of the first sentence with the following:

" In conformance with Sections 16-345 through 16-359 of the Regulations of the PURA state statutes, the Contractor is responsible for notifying 'Call Before You Dig' ..."

After **Article 1.05.16–Dimensions and Measurements**, *add the following article:*

"**1.05.17 – Welding:**

The Contractor shall ensure that all welding of materials permanently incorporated into the work, and welding of materials used temporarily during construction of the work is performed in accordance with the following codes:

- American Welding Society (AWS) Structural Welding Code – Steel – ANSI/AWS D1.1: Miscellaneous steel items that are statically loaded including but not limited to columns, and floor beams in buildings, railings, sign supports, cofferdams, tubular items, and modifications to existing statically loaded structures.
- AWS Structural Welding Code – Aluminum – AWS D1.2/D1.2M: Any aluminum structure or member including but not limited to brackets, light standards, and poles.
- AWS Structural Welding Code – Sheet Steel – AWS D1.3/D1.3M: Sheet steel and cold-formed members 0.18 in.(4.6 mm) or less in thickness used as, but not limited, to decking and stay-in-place forms.
- AWS Structural Welding Code – Reinforcing Steel – AWS D1.4/D1.4M: Steel material used in the reinforcement of cast-in-place or pre-cast Portland cement concrete elements including but not limited to bridge decks, catch basin components, walls, beams, deck units, and girders.
- AASHTO/AWS – Bridge Welding Code, AASHTO/AWS D1.5/D1.5M: Steel highway bridges and other dynamically loaded steel structures. Also includes sign supports, and any other fracture critical structure.

The edition governing the work shall be in effect on the date the Contract was advertised for solicitation of bids.

The Contractor is responsible to provide a Certified Welding Inspector in accordance with the above noted codes. The cost for this service is included in the general cost of the work.

All welders shall be certified by the Engineer in accordance with Section 6.03."

CONNECTICUT
SUPPLEMENTAL SPECIFICATION
SECTION 1.06
CONTROL OF MATERIALS

1.06.02 – Samples and Test:

Replace the first three paragraphs with the following:

"1.06.02 – **Samples and Test**: The Contractor must obtain the Engineer's approval of any sources of materials to be incorporated into the Project before beginning to use them for the Project.

Approval of materials sources may be by (1) certification accepted by the Engineer, (2) written permission of the Engineer, or (3) prior approval after documented test or inspection of the source by the Department. Any Project work in which materials from unapproved sources are used may be considered unauthorized by the Engineer, and therefore not to be paid for. Materials tests or inspection from sources or material delivered to a project site, when required, will be made by and at the expense of the Department, unless otherwise noted in the Contract.

Certification may be used as the basis for approval of such materials, as the Contract documents specify or as the Engineer may require. With regard to such materials, the Contractor may furnish the Engineer a Certified Test Report and Materials Certificate, conforming to Article 1.06.07, as may be required in the 'Minimum Schedule for Acceptance Testing' for each type of material. The Contractor shall bear any costs involved in furnishing the Test Report and Certificate."

Replace the fourth paragraph with the following:

"Material samples required by the Department will be as indicated in the latest edition of the 'Minimum Schedule for Acceptance Testing,' http://www.ct.gov/dot/lib/dot/documents/dpublications/dmt-manual_2015_v7d.pdf and tests will be performed in accordance with the latest revision of the standard method of AASHTO or ASTM, or in accordance with other standards accepted by the Department which are in effect at the time of bidding, unless otherwise specified on the plans or in the special provisions. Any items not covered in the 'Minimum Schedule for Acceptance Testing,' special provisions, or plans shall be sampled and tested or certified, as directed by the Engineer."

1.06.07 – Certified Test Reports and Materials Certificates:

Replace the first three paragraphs with the following:

"1.06.07 – Certified Test Reports and Materials Certificates: The Contractor shall furnish the Engineer with any Certified Test Report and Materials Certificate required by the Contract or the "Minimum Schedule for Acceptance Testing."

The Contractor shall forward the Certified Test Report and Materials Certificate to the

Engineer, and, in addition, shall deliver a copy of same to the Department's inspector at the Site. Materials for which such documentation is required may be conditionally incorporated into the Project prior to the Engineer's acceptance of a Certified Test Report and a Materials Certificate; however, payment for such incorporated material will not be made prior to receipt of a Certified Test Report and Materials Certificate indicating that the materials meets the Contract requirements.

A Certified Test Report is a document containing a list of the dimensional, chemical, metallurgical, electrical and physical results obtained from a physical test of the materials involved, and shall certify that the materials meet the requirements of the Contract. Such Report shall also include the following information:

(1) Item number and description of materials
(2) Date of manufacture
(3) Date of testing
(4) Name of organization to which the material has been consigned
(5) Quantity of material represented, such as batch, lot, group, etc.
(6) Means of identifying the consignment, such as label, marking, lot number, etc.
(7) Date and method of shipment
(8) Name of organization performing tests"

CONNECTICUT
SUPPLEMENTAL SPECIFICATION
SECTION 1.07
LEGAL RELATIONS AND RESPONSIBILITIES

In the list of Articles, change **"1.07.07 – Public Convenience and Safety"** *to* **"1.07.07 – Safety and Public Convenience."**

1.07.05 – Load Restrictions

Delete the entire article and replace with the following:

"**1.07.05 – Load Restrictions**

(a) Vehicle Weights: This subarticle will apply to travel both on existing pavements and pavements under construction. The Contractor shall comply with all legal load restrictions as to vehicle size, the gross weight of vehicles, and the axle weight of vehicles while hauling materials. Throughout the duration of the contract, the Contractor shall take precautions to ensure existing and newly installed roadway structures and appurtenances are not damaged by construction vehicles or operations.

Unless otherwise noted in contract specifications or plans, on and off road equipment of the Contractor, either loaded or unloaded, will not be allowed to travel across any bridge or on any highway when such a vehicle exceeds the statutory limit or posted limit of such bridge or highway. Should such movement of equipment become necessary the Contractor shall apply for a permit from the Department for such travel, as provided in the Connecticut General Statutes (CGS). The movement of any such vehicles within the project limits or detour routes shall be submitted to the Engineer for project record. Such permit or submittal will not excuse the Contractor from liability for damage to the highway caused by its equipment.

The Contractor is subject to fines, assessments and other penalties that may be levied as a result of violations by its employees or agents of the legal restrictions as to vehicle size and weight.

(b) Storage of Construction Materials/Equipment on Structures: Storage is determined to be non-operating equipment or material. The Contractor shall not exceed the statutory limit or posted limit for either an existing or new structure when storing materials and/or construction equipment. When a structure is not posted, then the maximum weight of equipment or materials stored in each 12 foot wide travel lane of any given span shall be limited to 750 pounds per linear foot combined with a 20,000 pound concentrated load located anywhere within the subject lane. If anticipated storage of equipment or material exceeds the above provision, then the Contractor shall submit his proposal of storage supported by calculations stamped by a Professional Engineer registered in the State of Connecticut, to the Engineer for approval 14 days prior to the storage operation. Operations related to structural steel demolition or erection shall follow the guidelines under Section 6.03. All other submittals shall include a detailed description of the material/equipment to be stored, the quantity of storage if it is stockpiled materials, the storage location, gross weight with supporting calculations if applicable, anticipated duration of storage and any environmental safety, or traffic protection that may be required. Storage location on the structure shall be clearly defined in the field. If structures are in a state of staged construction or demolition, additional structural analysis may be required prior to authorization of storage."

1.07.07 – Safety and Public Convenience

Change the title of Article 1.07.07 to read **"1.07.07 – Safety and Public Convenience"** *and change the last sentence of the seventh paragraph to read as follows:*

"The Contractor must make available for reference in its field office, throughout the duration of the Project, a copy of the Safety Plan and the latest edition, including all supplements, of the CFR pertaining to OSHA."

After the ninth paragraph insert the following:

" Before beginning work on the Project, the Contractor shall have a Safety Plan on file with the Department. The Safety Plan shall include the policies and procedures necessary for the Contractor to comply with OSHA and other pertinent regulatory rules, regulations and guidelines. The Safety Plan may be a comprehensive company-wide plan provided it addresses the scope and type of work contemplated by the Contract. The Safety Plan shall address all the requirements of this Section and any applicable State or Federal regulations, and shall be revised and updated as necessary.

The following elements shall be included in the Safety Plan:

1. General introduction describing the scope and applicability of the Safety Plan.
2. Identification of key staff responsible for the implementation and monitoring of the Contractor's Safety Plan, and their roles and responsibilities for safety.
3. Training requirements relative to safety.
4. Safety rules and checklists specific to the types of work generally performed by the Contractor.
5. Record-keeping and reporting requirements.
6. Identification of special hazards related to specific work elements.

The Contractor is responsible for the Safety Plan. Pursuant to Article 1.07.10, the Contractor shall indemnify, and save harmless the State from any and all liability related to any violation of the Safety Plan."

1.07.18 – Use of State Property

After Subarticle **(h)** *add the following sentence:*

"Gore areas are not available for disposal of surplus material."

CONNECTICUT
SUPPLEMENTAL SPECIFICATION
SECTION 1.08
PROSECUTION AND PROGRESS

1.08.01 – Transfer of Work or Contract:

Replace the last paragraph with the following paragraphs:

" The Contractor shall not sublet, sell, transfer, assign, or otherwise dispose of the Contract or any portion thereof, or of the work provided for therein, or of its right, title, or interest therein, to any individual or entity without the written consent of the Commissioner. No payment will be made for such work until written consent is provided by the Commissioner.

The Contractor shall pay the subcontractor for work performed within thirty (30) days after the Contractor receives payment for the work performed by the subcontractor. Withholding retainage by the Contractor, subcontractor or lower tier subcontractors is not allowed.

Payment for work that has been performed by a subcontractor does not eliminate the Contractor's responsibilities for all the work as defined in Article 1.07.12, "Contractor's Responsibility for Work."

Payment for work that has been performed by a subcontractor also does not release the subcontractor from its responsibility for maintenance and other periods of subcontractor responsibility specified for the subcontractor's items of work. Failure of a subcontractor to meet its maintenance, warranty or defective work responsibilities may result in administrative action on future Department contracts.

For any dispute regarding prompt payment, the alternate dispute resolution provisions of this article shall apply.

The above requirements are also applicable to all sub-tier subcontractors and the above provisions shall be made a part of all subcontract agreements.

Failure of the Contractor to comply with the provisions of this section may result in a finding that the Contractor is nonresponsible as a bidder for a Department contract."

1.08.07 – Determination of Contract Time:

Replace the first paragraph with the following:

" Unless the Contract requires the Project completion by a specified date, the number of calendar days allowed for the completion of the Project will be fixed by the Department, will be stated in the Contract, and will be known (with any subsequent adjustments) as the "Contract time." If at any time the Contractor submits a schedule showing completion of the work more than 30 calendar days in advance of the Contract completion date, the Department will issue a no-cost construction order revising the allowable Contract time to that shown on the Contractor's schedule."

Replace the fifth paragraph with the following:

“ The total elapsed time in calendar days, computed as described above, from the commencement date specified in the Engineer's "Notice to Proceed" to the “Substantial Completion” date specified in the Engineer's "Notice of Substantial Completion" shall be considered as the time used in the performance of the Contract work.”

1.08.09 – Failure to Complete Work on Time:

Replace the second paragraph with the following:

“ If the last day of the initial Contract time or the initial Contract date determined for Substantial Completion is before December 1 in the given year, liquidated damages as specified in the Contract shall be assessed against the Contractor per calendar day (including any days during a winter shutdown period) from that day until the date on which the Project is substantially completed.”

1.08.12—Final Inspection:

Replace the first paragraph with the following:

“ If the Engineer determines that the work may be substantially complete, a Semi Final Inspection will be held as soon as practical. After the Semi Final Inspection is held and the Engineer determines that the requirements for Substantial Completion have been satisfied the Engineer will prepare a “Notice of Substantial Completion”.

When the Contractor has completed all work listed in the “Notice of Substantial Completion” the Contractor shall prepare a written notice requesting a Final Inspection and a “Certificate of Acceptance of Work”. The Engineer will hold an Inspection of the Project as soon as practical after the Engineer determines that the Project may be completed. If the Engineer deems the Project complete, said inspection shall constitute the Final Inspection, and the Engineer will notify the Contractor in writing that the Final Inspection has been performed.”

1.08.13 – Acceptance of Work and Termination of the Contractor’s Responsibility:

Replace the only paragraph with the following:

“ The Contractor’s responsibility for non-administrative Project work will be considered terminated when the final inspection has been held, any required additional work and final cleaning-up have been completed, all final operation and maintenance manuals have been submitted, and all of the Contractor’s equipment and construction signs have been removed from the Project site. When these requirements have been met to the satisfaction of the Engineer, the Commissioner will accept the work by certifying in writing to the Contractor that the non-administrative Project work has been completed.”

CONNECTICUT
SUPPLEMENTAL SPECIFICATION
SECTION 1.09
MEASUREMENT AND PAYMENT

In the list of articles, make the following change:

"**1.09.02—Value Engineering Change Proposal**"

1.09.02—Value Engineering Change Proposal

Replace the entire article with the following:

"**1.09.02—Value Engineering Change Proposal:** These Value Engineering Change Proposal (VECP) provisions apply as encouragement to the Contractor to initiate, develop, and present to the Department for consideration cost- or time- reduction proposals or a combination of both conceived by the Contractor, involving changes to the drawings, designs, specifications, or other requirements of the Contract. These provisions do not apply unless the proposal submitted is specifically identified by the Contractor as being presented for consideration as a VECP. All such proposals must be made on the Department's VECP form, copies of which are available from the Department. The Department reserves the right to decline to review, or to reject after initial review, any VECP. Before expending considerable funds in development of a formal VECP, the Contractor shall submit a conceptual Proposal to the Department on Department-provided forms.

The proposals which may be considered as VECPs are those which, if implemented, (a) would require modification of the Contract by construction order; (b) would produce a savings to the Department by calling for the use of items or methods less costly than those specified in the Contract; (c) would not alter necessary standardized features of the original Project; and (d) would not impair essential functions or characteristics of the construction called for by the original Contract, such as service life, reliability, economy of operation, and ease of maintenance.

Material substitution alone will not be considered as a VECP.

A VECP may shorten Contract time, however, acceleration alone will not be considered as a VECP.

Cautions and Conditions:

1. The Contractor is cautioned not to base any bid or bid price on the anticipated approval of a VECP and to recognize that such Proposal may be rejected. The Contractor will be required to perform the Contract in accordance with the existing Contract plans and specifications at the prices bid unless and until the Department formally accepts, in writing, the Contractor's VECP.
2. In order for the Department to consider such a Proposal, the savings likely to be generated by the Proposal must be sufficient, in the sole judgement of the Department, to warrant its review and processing by the Department. All costs resulting from such review or processing will be borne by the Department. Before any VECP will be considered by the Department, the Department must determine, in its sole judgement, that implementation of the Proposal would result in a total cost savings of more than $100,000.00, reflecting a savings of at least $50,000.00 for the Department. The Department will not consider any VECP that would require an increase in Contract time.
3. All VECPs apply only to the ongoing Contract, and whether approved or not, such Proposals become the property of the Department. Such Proposals shall contain no restrictions imposed by the Contractor on their use or disclosure by the State. The

Department will have the right to use, duplicate and disclose in whole or in part any data necessary for the use or implementation of the Proposal. The Department retains the right to use any accepted Proposal or part thereof on any other current or subsequent Department projects without any obligation to the Contractor for such use. This provision is not intended to deny rights provided by law with respect to patented materials or processes.

4. If the Department already has under consideration certain revisions of the Contract or has approved certain changes in specifications or standard drawings for general use which subsequently appear in a VECP, the Department may reject the Contractor's Proposal and may proceed with such revisions without any obligation to the Contractor.
5. The Proposal must be presented and approved in writing prior to the Contractor's undertaking any work on the Contract items involved in the proposal. Savings due to a reduction in quantities or deletion of items which result solely from adjustments to field conditions, and Proposals which would only waive specification or other Contract requirements, are not considered to be VECPs.
6. The Contractor shall have no claim against the Department for any costs or delays due to the Department's review or rejection of a VECP, including, but not limited to, development costs, anticipated profits, or increased material or labor costs resulting from delays in the review or rejection of such Proposal.
7. The Department will be the sole judge of the acceptability of a Proposal and of the estimated net savings in construction costs that would result from adoption of all or any part(s) of such Proposal. In determining such estimated net savings, the Department reserves the right to disregard the Contract bid prices if, in the judgment of the Engineer, such prices do not represent a fair measure of the value of work to be performed or deleted under the Proposal. Errors in the estimated quantities in the bid proposal form for the Contract shall be corrected by the Department prior to calculating the savings that would likely result from adoption of the VECP.
8. The Engineer may reject all or any portion of work performed pursuant to an approved VECP if the Engineer determines that unsatisfactory results are being obtained because of the Proposal's implementation with regard to that work. The Engineer may direct the removal of such rejected work and require the Contractor to proceed in accordance with the original Contract requirements. Where modifications of the VECP have been approved in order to adjust to field or other conditions, payment will be limited to the total amount payable for the work at the Contract bid prices, as if the pertinent work had been constructed in accordance with the original Contract requirements. The Contractor waives the right to use such rejection or limitation of reimbursement as the basis of any claim against the State for delay damages or for any other damages or costs.
9. VECPs must meet the requirements of the specifications or standards of the Department. The standards governing the original design of the Contract will be the minimal standard allowed.
10. If additional information is needed in order for the Department to evaluate Proposals, the Contractor must provide the Department with this information within 14 calendar days of such request or within such other time period as may be approved by the Department. Failure to do so will result in rejection of the Proposal.
11. The Contractor shall provide revised Project plans, specifications and estimates to the Department in construction order format, reflecting such changes as would be required for implementation of the VECP. The Contractor shall be solely responsible for any errors or omissions resulting from such revisions.
12. Savings not directly related to the Contract, such as, but not limited to, reductions in inspection or testing costs or Department overhead, will not be included in the savings calculation for any VECP.

After the Contractor submits a conceptual Proposal, they will be notified in writing of the acceptability or the reason(s) for its rejection. The Department retains the right to reject the formal Proposal even if the conceptual Proposal was determined acceptable.

VECPs will be processed in the same manner as are alterations of the Contract that require a construction order.

VECP Submittal Requirements:

1. A statement that the Proposal is being submitted as a VECP.
2. A description of the difference between the existing Contract requirements and the proposed change(s), and the comparative advantages and disadvantages of each, taking into account considerations of service life, economy of operations, ease of maintenance, desired appearance, safety, and environmental impacts or necessary permit changes. When an item's function or characteristics would be altered by implementation of the Proposal, a justification of the anticipated effects of the alteration on the end item's performance must be included in the Proposal. A life-cycle cost analysis must be included for items involving alteration of functional characteristics. Factors for determining future worth will be provided by the Department.
3. Complete plans, specifications, and computations signed and sealed by a Professional Engineer licensed by the State of Connecticut, showing that the proposed Contract revisions would incorporate the same design criteria and restrictions that applied to the original Contract features and requirements. Said revisions shall be submitted by the Contractor in the Department's construction order format consisting of 1 paper copy of the plans and 1 electronic copy of the plans as a portable document format (PDF) file, indicating (a) quantity increases and decreases by item number, with associated cost; (b) new items, with their quantities and costs; (c) specifications in contract format; and, if needed, (d) compliance permit applications and revisions in accordance with Section 1.10.
4. A complete analysis of the probable cost effects of the proposed changes on Project construction, future operations in connection with the completed Project, maintenance and durability of completed Project construction, and other aspects of the Project, as appropriate.
5. The date by which the Proposal would have to be implemented in order for the Department to obtain the maximum cost reduction from the Proposal's implementation. The period established by the date must allow the Department ample time for review and processing of the Proposal. Should the Department find that it does not have sufficient time for such review and processing, it may reject the Proposal solely on such basis. If the Department fails to respond to the Proposal by said date, the Contractor shall consider the Proposal to be rejected and shall have no claims against the State as a result thereof.
6. A description of the effect that the implementation of the Proposal would likely have on the time required to complete the Project.

Payment for accepted VECPs:

1. The changes resulting from a VECP will be incorporated into the Contract by construction order and shall reflect the changes in existing unit bid item quantities, or any new agreed price items, cost-plus lump sum, or any combination thereof, as appropriate, in accordance with the Specifications and as determined by the Department. Any lump sum submission shall be accompanied by a schedule of payment values.
2. The Contract prices for the revised Project work will be paid directly as accomplished. In addition to such payment, the Department will pay the Contractor, under a separate item or a Value Engineering Incentive item, 50% of the total savings obtained by the State as a result of its implementation of the VECP. An estimate of said savings is to be calculated by the Department within 1 week prior to the Proposal’s acceptance, by (a) estimating what it will cost the Department to carry out the Project as revised according to the VECP; (b) estimating what it would have cost the Department to carry out the Project under the terms of the Contract as modified by any construction orders as of the time that the Department accepted the Proposal; and (c) subtracting the sum estimated as per (a) from the sum estimated as per (b).

When the implementation of the Proposal, including all related construction, has been completed, the Department will calculate the actual savings that resulted from it. The Department will then distribute half of the actual savings to the Contractor.

3. The Contractor's costs for development, design, submission and processing of the VECP are not eligible for reimbursement.
4. The Department will not reimburse the Contractor based on any cost savings not identified in the VECP prior to its acceptance.
5. The cost savings from a VECP that is exclusively time reduction shall be calculated as the number of Contract days reduced, multiplied by the amount of liquidated damages for 1 day under the Contract."

1.09.04 – Extra and Cost-Plus Work

Delete the word "bonding" under section (a) Labor, (3).

Delete existing subarticle (e) and replace with the following:

"**(e) Administrative Expense:** When extra work on a cost-plus basis is performed by an authorized subcontractor, the Department will pay the Contractor an additional 7.5% for that work; such payment will be in addition to the percentage payments described in (a), (b), (c) and (d) above, as a reimbursement for the Contractor's administrative expense in connection with such work. Approval of such additional payments will be given only after the Contractor provides to the Engineer receipted invoices for all relevant costs."

1.09.06 – Partial Payments:

In the first paragraph under **A. Monthly and Semi-monthly Estimates:**, *delete the second, third and fourth sentences and replace the remainder of subarticle (1) with the following:*

"Retainage will not be held.

Exceptions may be made as follows:

(a) When not in conflict with the interests of the State, the Contractor may request, and the Engineer may make, semi-monthly estimates for payment.
(b) If, in the judgment of the Assistant District Engineer, the Project is not proceeding in accordance with the Contract the Engineer may decline to make a payment estimate.
(c) If the total value of the Project work complete since the last estimate amounts to less than $2,500 the Engineer also may decline to make a payment estimate."

Replace the first paragraph of subarticle **B. Payment for Stored Materials:** *with the following:*

"**B. Payment for Stored Materials:** Non-perishable materials that are required for Project construction and that the Contractor has produced or purchased specifically for incorporation into the Project, but which have not yet been so incorporated, may be included in a payment estimate if

(i) the materials meet all applicable Contract specifications,

(ii) the materials have been delivered to the Project site or to another location approved by the Engineer, and

(iii) the Contractor has submitted to the Engineer, as evidence of the Contractor's purchase of the materials, either a copy of a receipted bill for same or a Certificate of Title to the materials, in the form approved by the Department, duly-executed by the Contractor and Vendor.

The Engineer will decide at what fair and appropriate fraction of the applicable Contract price such materials may be included in a payment estimate."

1.09.07 – Final Payment:

Replace the entire article with the following:

"**1.09.07 – Final Payment:** When the Commissioner has accepted the Project in accordance with Article 1.08.14, the Engineer will prepare a final payment estimate."

CONNECTICUT
SUPPLEMENTAL SPECIFICATION
SECTION 1.10
ENVIRONMENTAL COMPLIANCE

Delete the entire Section and replace it with the following:

SECTION 1.10
ENVIRONMENTAL COMPLIANCE

1.10.01—General
1.10.02—Compliance with Laws and Regulations
1.10.03—Water Pollution Control
1.10.04—Vacant
1.10.05—Construction Noise Pollution
1.10.06—Protection of Archaeological and Paleontological Remains and Materials
1.10.07—Controlled and Hazardous Materials
1.10.08—Vehicle Emissions

1.10.01—General: During and following Project construction, the Contractor shall exercise precaution and care to prevent or minimize negative effects on the environment, including the State's waters, wetlands, and other natural resources. The Contractor shall comply with all Project permits and permit applications as though the Contractor were the permittee.

The Contractor must comply with the environmental provisions specified in the Contract, and any Federal, State or municipal laws or regulations. If the Contractor fails to comply with these environmental provisions, the Contractor will be penalized as specified in this Section and elsewhere in the Contract.

1.10.02—Compliance with Laws and Regulations: The Contractor shall conduct its operations in conformance with the permit requirements established by Federal, State and municipal laws and regulations.

The Department will be responsible for obtaining all environmental permits required for Contract work. If at the time such a permit is issued, its contents differ from those described in the Contract, the permit shall govern. Should the permit be issued after the solicitation of bid proposals, and should the permit requirements significantly change the character of the work as described in the Department's Project bid documents, Contract adjustments will be made in accordance with the applicable articles in Section 1.04 herein.

The Contractor shall be responsible for, and hold the State harmless from, any penalties or fines assessed by any authority due to the Contractor's failure to comply with any term of an applicable environmental permit.

Any request by the Contractor for the Department's authorization of an activity or use of a method not specifically called for or allowed by the applicable permits issued for the Project must be submitted by the Contractor in writing to the Engineer. Such a request must include a detailed description of the proposed alternate activity or method, and must include justifications for same, along with supporting documentation,

showing that the proposed alternate activity or method will not create a risk of damage to the environment, increase the permitted wetland impact footprint, or increase fill within a floodplain. If such request is granted by the Engineer, the Department will forward to the appropriate regulatory agency or agencies any permit modification, permit revision, *de minimis* change or new permit required for the Contractor to carry out the proposed alternate activity or method in question. The Department does not, however, guarantee that it will be able to obtain such approval from the regulatory agency or agencies; and the Department will not be liable for the effects of such inability to do so.

The Contractor will not be entitled to any extension of Contract time as a result of the Engineer's granting of such a request from the Contractor. If changes to the permit are not necessary except to accommodate changes requested by the Contractor, then no claim may be made by the Contractor based on the amount of time taken by the Department to review the Contractor's request or to secure approval of related permit changes from the regulatory agency or agencies. The proposed alternate activity or method shall not commence until and unless the Engineer has approved the Contractor's request.

1.10.03—Water Pollution Control: The Contractor shall, throughout the duration of the Contract, control and abate siltation, sedimentation and pollution of all waters, including but not limited to underground water systems, inland wetlands, tidal wetlands, and coastal or navigable waters.

Construction methods proposed by the Contractor must comply with the approved permit requirements and permit applications. The Contractor shall be responsible for all obligations and costs incurred as a result of the Contractor's failure to comply with the terms and conditions of such permits or permit applications.

The following are Required Best Management Practices for prevention and control of water pollution. Provisions of the Required Best Management Practices may be superseded as specified in Article 1.05.04. The Contractor shall not make any design change in the Contract work that requires a variance from the requirements of the following items until and unless the Contractor has first submitted a detailed written proposal for such variance to the Engineer for review by the Department and for transmittal to and review by the Federal, State or municipal environmental authority, and has then received written approval from the Department of the proposed variance.

REQUIRED BEST MANAGEMENT PRACTICES

(1) Prior to commencing Project Site work, the Contractor shall submit in writing to the Engineer an “Erosion and Sedimentation Control Plan” and a “Dust Control Plan” for all Project construction stages. The Contractor shall install all control measures specified in said Plans prior to commencement of Project construction activities. The Plans shall be consistent with the Connecticut Guidelines for Soil Erosion and Sediment Control, the Connecticut Stormwater Quality Manual, and all environmental laws and regulations established by Federal, State or municipal agencies, as well as the Department's published environmental policies and standards. If the Contractor elects to work during a winter shutdown period, the Contractor shall submit to the Engineer a separate Winter Erosion and Sedimentation Control Plan, obtain the Engineer's written approval of it, and implement it before the Contractor begins Project work during the winter shut-down period.

(2) The Contractor shall inspect erosion and sedimentation controls at least

weekly, immediately after each rainfall event of at least 0.1 inch, and daily during periods of prolonged rainfall. The Contractor shall maintain all erosion and sedimentation control devices in a functional condition, in accordance with the Contract plans, relevant permits, Special Provisions, and 2002 Connecticut Guidelines for Soil Erosion and Sediment Control. In the event that the Contractor fails to maintain such devices in accordance with said documents, and the Contractor does not correct such a failure within 24 hours after receipt of written notice of such a failure from the Engineer, the Department may proceed with its own or other forces to remedy such failures. The cost to the Department of curing any such specified failure will be deducted from monies owed to the Contractor under the Contract or under any other State contract.

(3) Washout of applicators, containers, vehicles, and equipment that have been used with concrete (including bituminous concrete), paint or other such possible contaminants shall be conducted: (i) at least 50 ft from any stream, wetland or other sensitive resource; and (ii) in an entirely self-contained washout system. Such materials shall be collected and disposed of in accordance with all applicable Federal, State and municipal laws and regulations.

(4) No materials resulting from Project construction activities shall be placed in or allowed to contribute to the degradation of a wetland, watercourse or storm drainage system. Good housekeeping of the Site by the Contractor for the purpose of preventing construction-related debris or runoff from entering a regulated area is required. The Contractor shall not leave waste or debris within the travel way or roadside where it might create a safety hazard to the traveling public. The Contractor shall dispose of all construction-related materials in accordance with Federal, State and municipal laws and regulations.

(5) In accordance with CGS Section 22a-38, the Contractor shall not withdraw water from any watercourse system, except as allowed by applicable permits.

(6) The Contractor shall not dispose of any material until and unless it has proposed a location for its disposal to the Engineer and the Engineer has approved said location in writing.

If the proposed disposal location is on private property, the Contractor must include in the location proposal to the Engineer letters from the property owner and the affected municipality, agreeing to the proposed location for disposal.

The Contractor shall ensure that proposed disposal locations are outside of wetlands or watercourses, floodplains and water or natural resource areas.

(7) Before commencing any work in or adjacent to a regulated area shown on the plans, permit(s), or identified by the Engineer, the Contractor must submit in writing to the Engineer a construction-sequencing plan, a water-handling plan, and a flood contingency plan, and obtain from the Engineer written approval of said plans.

(8) When dewatering is necessary, the Contractor must not allow pumps used for same to discharge directly into a wetland or watercourse. Prior to any dewatering, the Contractor must submit to the Engineer a written proposal for specific methods and devices to be used for same, and must obtain the Engineer's written approval of such methods and devices, including, but not limited to, the pumping of water into a temporary sedimentation basin, providing surge protection at the inlet or outlet of pumps, floating the intake of a pump, or any other method for minimizing or retaining the suspended solids. If

the Engineer determines that a pumping operation is causing turbidity in a regulated area, the Contractor shall halt said operation until a means of controlling the turbidity is submitted by the Contractor in writing to the Engineer, approved in writing by the Engineer, and implemented by the Contractor.

(9) Whenever possible, work within or adjacent to watercourses shall be conducted during periods of low flow. The Engineer shall remain aware of flow conditions during the conduct of such work, and shall order such work stopped if flow conditions threaten to cause excessive erosion, siltation or turbidity. Before predicted major storms (*i.e.*, a storm predicted by NOAA Weather Service, with warnings of flooding, severe thunderstorms, or similarly severe weather conditions or effects), the Contractor shall make every effort to secure the Site to the satisfaction of the Engineer. Unless allowed by a DEEP permit, the Contractor shall store no materials and place no staging areas below the 100-year flood elevation. The Contractor shall not store below the 500-year flood level any materials which are buoyant, hazardous, flammable, explosive, soluble, expansive, radioactive, and any other materials that could be injurious to human, animal or plant life in the event of a flood.

(10) Upon completion of the associated work, the Contractor shall immediately clear all areas of all forms, false work, piling, debris or other obstructions created or caused by construction operations.

(11) If the Contractor wants to make a change in construction operations, staging or scheduling that would affect the use of or necessity for any pollution controls, the Contractor must submit to the Engineer a written proposal detailing the proposed change, and must receive the Engineer's approval of such change, before implementing it. Such submission must include a plan showing erosion and sedimentation controls above and beyond those called for in the Contract that would be necessitated by the proposed change.

(12) Dumping of oil, fuel, chemicals or other harmful materials on the ground or into a regulated area is forbidden. The Contractor shall provide to the Engineer a written Spill Prevention and Remediation Plan for the Project, outlining the Contractor's intended means of catching, retaining, and properly disposing of drained oil, removed oil filters, fuel, chemicals and other harmful material. Such plan shall also include the information and protocols needed for the remediation of, any spill that might occur on the Site, including emergency contact information. No construction activities shall commence until such a plan has been approved in writing by the Engineer.

(13) The Contractor shall restore all areas within or outside the State right-of-way that have been disturbed as a result of construction activities, in accordance with Article 1.08.11.

1.10.04—Vacant

1.10.05—Construction Noise Pollution: The Contractor shall take measures to minimize the noise caused by its construction operations, including but not limited to noise generated by equipment used for drilling, pile-driving, blasting, excavation or hauling.

All methods and devices employed to minimize noise shall be subject to the continuing approval of the Engineer. The maximum allowable level of noise at the residence or occupied building nearest to the Site shall be 90 decibels on the "A"-weighted scale (dBA). The Contractor shall halt any Project operation that violates this standard at any

time until the Contractor develops and implements a methodology that enables it to keep the noise from its Project operations below the 90-dBA limit.

1.10.06—Protection of Archaeological and Paleontological Remains and Materials: The Contractor shall be alert to the possibility that Project operations may disturb or uncover significant archaeological or paleontological resources or other such remains which in many cases are protected by Federal laws, State laws or both. Archaeological resources are minimally defined by Federal regulations as materials 50 years of age or older. They typically consist of subsurface concentrations of metal, bone, ceramic, or flaked or other shaped stone artifacts. They might also consist of *features* such as buried building foundations, linear or circular walls made of individual stones rather than concrete or cement, trash-filled pits, patches of burned earth, or distinct patterns of nearly-circular, elliptical, or squared discolorations in newly-exposed soil, accompanied by the types of *artifacts* described above.

Paleontological resources are defined as any fossilized remains, traces, or imprints of organisms, preserved in or on the earth's crust. These typically include fossilized bones, teeth, shells, eggs, or distinct impressions made in bedrock.

When archaeological or paleontological materials are inadvertently encountered, the Contractor shall immediately halt operations in the location of same and shall notify the Engineer of said discovery. The Contractor shall make every effort to preserve archaeological or paleontological materials intact in their original positions, in order to preserve the geological context and information content of the remains in relation to one another and to the enclosing soil.

The Engineer shall have the authority to suspend Project work in the area of such discovery for the purpose of preserving or recovering and documenting the archaeological or paleontological materials. The Contractor shall carry out all instructions of the Engineer for the protection of such materials, including steps to protect the site from vandalism, unauthorized investigations, accidental damage, and damage from such causes as heavy rainfall or runoff. The Contractor shall reschedule its work to minimize any loss of the time needed to complete the Project while the State evaluates, records and salvages the archaeological or paleontological materials.

Extra work ordered by the Engineer in this connection will be paid for in accordance with Articles 1.04.05 and 1.09.04. Delays caused by archaeological or paleontological preservation and protection, which the Contractor demonstrates have delayed completion of the Project, will be treated under the provisions for extension of time, Article 1.08.08.

1.10.07—Controlled and Hazardous Materials: The Department will acquire any "Hazardous Waste Generator Permit(s)" required under the Resource Conservation and Recovery Act, for the management and disposal of hazardous materials on the Site, provided that

1. such material is within the construction limits defined in the Contract, and
2. such material was not generated by the Contractor.

If the Department has designated in the Contract an area of known or suspected contamination within the Project limits, the Contractor shall dispose of such material in accordance with the relevant Special Provisions.

In the event that the Contractor encounters or exposes any material, not previously known or suspected to be contaminated, but exhibiting properties that may indicate the presence of controlled or hazardous material, the Contractor shall cease all operations in the material's vicinity and shall immediately notify the Engineer of the material's

discovery. The presence of barrels, discolored earth, metal, wood, visible fumes or smoke, abnormal odors or excessively hot earth may indicate the presence of controlled or hazardous material, and the Contractor shall treat it with extreme caution.

If controlled or hazardous materials, other than those required for Contract operations, are discovered at the Site, the Department may engage a specialty contractor to handle and dispose of the materials.

When the Contractor performs support work incidental to the removal, treatment or disposal of controlled or hazardous material, the Department will pay for same at the applicable Contract unit prices. When the Contract does not include appropriate pay items for such work, the Department will pay for it in accordance with Article 1.04.05.

The Contractor shall observe all security precautions established pursuant to 29 CFR 1910.120 and 1926.65, including all revisions and amendments thereof, and shall not work in any area known to contain or suspected of containing controlled or hazardous material without prior written approval to do so from the Engineer.

The Contractor shall assume sole responsibility for the proper storage, handling, management, and disposal of all regulated materials and wastes associated with its operations, including, but not limited to, lubricants, antifreeze, engine fluids, paints, and solvents. All costs associated with any failure by the Contractor to properly manage such materials in accordance with Federal, State and municipal regulations, and all remedial and punitive costs incurred by the Department as a result of such failure by the Contractor, shall be borne by the Contractor.

This article does not apply to coatings removed by the Contractor.

1.10.08–Vehicle Emissions: All motor vehicles and construction equipment used for the Project (both on-highway and off-road) shall comply with all Federal, State and municipal regulations concerning exhaust emission controls or safety.

The Contractor shall establish staging zones for vehicles waiting to load or unload at the Site. Such zones shall be located where the emissions from the vehicles will have minimum impact on abutting properties and the general public.

Idling of delivery trucks, dump trucks, and other equipment shall not be permitted for longer than 3 minutes during periods of non-activity, except as allowed by the Regulations of Connecticut State Agencies Section 22a-174-18(b)(3)(c):
No mobile source engine shall be allowed “to operate for more than 3 consecutive minutes when the mobile source is not in motion, except as follows:

(i) When a mobile source is forced to remain motionless because of traffic conditions or mechanical difficulties over which the operator has no control,
(ii) When it is necessary to operate defrosting, heating or cooling equipment to ensure the safety or health of the driver or passengers,
(iii) When it is necessary to operate auxiliary equipment that is located in or on the mobile source to accomplish the intended use of the mobile source,
(iv) To bring the mobile source to the manufacturer’s recommended operating temperature,
(v) When the outdoor temperature is below 20°F
(vi) When the mobile source is undergoing maintenance that requires such mobile source be operated for more than 3 consecutive minutes, or
(vii) When a mobile source is in queue to be inspected by U.S. military personnel prior to gaining access to a U.S. military installation.”

The Contractor shall conduct all of its Project work in a way that causes no harm to adjacent sensitive receptors. Sensitive receptors include but are not limited to hospitals, schools, daycare facilities, elderly housing, and convalescent facilities. The

Contractor shall see to it that any engine exhaust is not directed toward fresh air intakes, air conditioners, or windows.

Before performing extensive work within less than 50 ft of a sensitive receptor, the Contractor must (1) submit to the Engineer a Vehicle Emissions Mitigation plan, proposing detailed means for minimizing vehicle emissions from vehicles and construction equipment in the affected area, including a proposed sequence of construction; (2) obtain the Engineer's written approval of the Plan, making any revisions of same necessary to obtain said permission; and (3) implement the Plan, as it may have been revised..

Any costs associated with this “Vehicle Emissions” Article shall be included in the general cost of the Contract. In addition, there shall be no additional time granted to the Contractor for compliance with this Article. The Contractor’s compliance with this Article and any associated laws or regulations shall not be grounds for claims as outlined in Section 1.11 – “Claims”.

CONNECTICUT
SUPPLEMENTAL SPECIFICATION
SECTION 1.11
CLAIMS

Add the following Section:

SECTION 1.11
CLAIMS

1.11.01 – General
1.11.02 – Notice of Claim
1.11.03 – Record Keeping
1.11.04 – Claim Compensation
1.11.05 – Required Claim Documentation
1.11.06 – Auditing of Claims

1.11.01 – General: When filing a formal claim under Section 4-61 (referred to as "Section 4-61" below) of the C.G.S. (as revised), either as a lawsuit in the Superior Court or as a demand for arbitration, the Contractor must follow the procedures and comply with the requirements set forth in this Section of the Specifications. This Section does not, unless so specified, govern informal claims for additional compensation which the Contractor may bring before the Department. The Contractor should understand, however, that the Department may need, before the Department can resolve such a claim, the same kinds of documentation and other substantiation that it requires under this Section. It is the intent of the Department to compensate the Contractor for actual increased costs caused by or arising from acts or omissions on the part of the Department that violate legal or contractual duties owed to the Contractor by the Department.

1.11.02 – Notice of Claim: Whenever the Contractor intends to file a formal claim against the Department under Section 4-61, seeking compensation for additional costs, the Contractor shall notify the Commissioner in writing (in strict compliance with Section 4-61) of the details of said claim. Such written notice shall contain all pertinent information described in Article 1.11.05 below.

Once formal notice of a claim under C.G.S. Section 4-61 (b) (as revised) has been given to the Commissioner, the claimant may not change the claim in any way, in either concept or monetary amount, (1) without filing a new notice of claim and demand for arbitration to reflect any such change and (2) without the minimum period of six months after filing of the new demand commencing again and running before any hearing on the merits of the claim may be held. The only exception to this limitation will be for damages that continue to accrue after submission of the notice, in ways described and anticipated in the notice.

1.11.03 – Record Keeping: The Contractor shall keep daily records of all costs incurred in connection with its construction-related activities on behalf of the Department. These daily records shall identify each aspect of the Project affected by

matters related to any claim for additional compensation that the Contractor has filed, intends to file, or has reason to believe that it may file against the Department; the specific Project locations where Project work has been so affected; the number of people working on the affected aspects of the Project at the pertinent time(s); and the types and number of pieces of equipment on the Project site at the pertinent time(s). If possible, any potential or anticipated effect on the Project's progress or schedule which may result in a claim by the Contractor should also be noted contemporaneously with the cause of the effect, or as soon thereafter as possible.

1.11.04 – Claim Compensation: The payment of any claim, or any portion thereof, that is deemed valid by the Engineer shall be made in accordance with the following provisions of this Article:

(a) Compensable Items: The liability of the Department for claims will be limited to the following specifically-identified items of cost, insofar as they have not otherwise been paid for by the Department, and insofar as they were caused solely by the actions or omissions of the Department or its agents (except that with regard to payment for extra work, the Department will pay to the Contractor the mark-ups provided for in Article 1.04.05.):

(1) Additional Project-site labor expenses.
(2) Additional costs for materials.
(3) Additional, unabsorbed Project-site overhead (**e.g.**, for mobilization and demobilization).
(4) Additional costs for active equipment.
(5) For each day of Project delay or suspension caused solely by actions or omissions of the Department, either
    (i) an additional ten percent (10%) of the total amount of the costs identified in Subarticles (1) through (4) above; except that if the delay or suspension period prevented the Contractor from incurring enough Project costs under Subarticles (1) through (4) during that period to require a payment by the Department that would be greater than the payment described in subparagraph (ii) below, then the payment for affected home office overhead and profit shall instead be made in the following *per diem* amount:
    (ii) six percent (6%) of the original total Contract amount divided by the original number of days of Contract time.

Payment under either (i) or (ii) hereof shall be deemed to be complete and mutually-satisfactory compensation for any unabsorbed home office overhead and any profit related to the period of delay or suspension.

(6) Additional equipment costs. Only actual equipment costs shall be used in the calculation of any compensation to be made in response to claims for additional Project compensation. Actual equipment costs shall be based upon records kept in the normal course of business and in accordance with generally-accepted accounting principles. Under no circumstances shall Blue Book or other guide or rental rates be used for this purpose (unless the Contractor had to rent the equipment from an unrelated party, in which case the actual rental charges paid by the Contractor, so long as they are reasonable, shall be used). Idle equipment, for instance, shall be paid for based only on its actual cost to the Contractor.

(7) Subcontractor costs limited to, and determined in accordance with, Subarticles (1), (2), (3), (4), and (5) above and applicable statutory and case law. Such subcontractor costs may be paid for by the Department only (a) in the context of an informal claims settlement or (b) if the Contractor has itself paid or legally-assumed, present unconditional liability for those subcontractor costs.

(b) Non-Compensable Items: The Department will have no liability for the following specifically-identified non-compensable items:

(1) Profit, in excess of that provided for herein.
(2) Loss of anticipated profit.
(3) Loss of bidding opportunities.
(4) Reduction of bidding capacity.
(5) Home office overhead in excess of that provided for in Article 1.11.04(a)(5) hereof.
(6) Attorneys fees, claims preparation expenses, or other costs of claims proceedings or resolution.
(7) Any other consequential or indirect expenses or costs, such as tort damages, or any other form of expense or damages not provided for in these Specifications or elsewhere in the Contract.

1.11.05 – Required Claim Documentation: All claims shall be submitted in writing to the Commissioner, and shall be sufficient in detail to enable the Engineer to ascertain the basis and the amount of each claim, and to investigate and evaluate each claim in detail. As a minimum, the Contractor must provide the following information for each and every claim and sub-claim asserted:

(a) A detailed factual statement of the claim, with all dates, locations and items of work pertinent to the claim.
(b) A statement of whether each requested additional amount of compensation or extension of time is based on provisions of the Contract or on an alleged breach of the Contract. Each supporting or breached Contract provision and a statement of the reasons why each such provision supports the claim, must be specifically identified or explained.
(c) Excerpts from manuals or other texts which are standard in the industry, if available, that support the Contractor's claim.
(d) The details of the circumstances that gave rise to the claim.
(e) The date(s) on which any and all events resulting in the claim occurred, and the date(s) on which conditions resulting in the claim first became evident to the Contractor.
(f) Specific identification of any pertinent document, and detailed description of the substance of any material oral communication, relating to the substance of such claim.
(g) If an extension of time is sought, the specific dates and number of days for which it is sought, and the basis or bases for the extension sought. A critical path method, bar chart, or other type of graphical schedule that supports the extension must be submitted.
(h) When submitting any claim over $50,000, the Contractor shall certify in writing, under oath and in accordance with the formalities required by the contract, as to the following:
    (1) That supporting data is accurate and complete to the Contractors best

knowledge and belief;

(2) That the amount of the dispute and the dispute itself accurately reflects what the Contractor in good faith believes to be the Departments liability;

(3) The certification shall be executed by:

a. If the Contractor is an individual, the certification shall be executed by that individual.

b. If the Contractor is not an individual, the certification shall be executed by a senior company official in charge at the Contractor's plant or location involved or an officer or general partner of the Contractor having overall responsibility for the conduct of the Contractors affairs.

1.11.06 – Auditing of Claims: All claims filed against the Department shall be subject to audit by the Department or its agents at any time following the filing of such claim. The Contractor and its subcontractors and suppliers shall cooperate fully with the Department's auditors. Failure of the Contractor**,** its subcontractors, or its suppliers to maintain and retain sufficient records to allow the Department or its agents to fully evaluate the claim shall constitute a waiver of any portion of such claim that cannot be verified by specific, adequate, contemporaneous records, and shall bar recovery on any claim or any portion of a claim for which such verification is not produced. Without limiting the foregoing requirements, and as a minimum, the Contractor shall make available to the Department and its agents the following documents in connection with any claim that the Contractor submits:

(1) Daily time sheets and foreman's daily reports.
(2) Union agreements, if any.
(3) Insurance, welfare, and benefits records.
(4) Payroll register.
(5) Earnings records.
(6) Payroll tax returns.
(7) Records of property tax payments.
(8) Material invoices, purchase orders, and all material and supply acquisition contracts.
(9) Materials cost distribution worksheets.
(10) Equipment records (list of company equipment, rates, etc.).
(11) Vendor rental agreements
(12) Subcontractor invoices to the Contractor, and the Contractor's certificates of payments to subcontractors.
(13) Subcontractor payment certificates.
(14) Canceled checks (payroll and vendors).
(15) Job cost reports.
(16) Job payroll ledger.
(17) General ledger, general journal (if used), and all subsidiary ledgers and journals**,** together with all supporting documentation pertinent to entries made in these ledgers and journals.
(18) Cash disbursements journals.
(19) Financial statements for all years reflecting the operations on the Project.
(20) Income tax returns for all years reflecting the operations on the Project.
(21) Depreciation records on all company equipment**,** whether such records are maintained by the company involved, its accountant, or others.

(22) If a source other than depreciation records is used to develop costs for the Contractor's internal purposes in establishing the actual cost of owning and operating equipment, all such other source documents.
(23) All documents which reflect the Contractor's actual profit and overhead during the years that the Project was being performed**,** and for each of the five years prior to the commencement of the Project.
(24) All documents related to the preparation of the Contractor's bid**,** including the final calculations on which the bid was based.
(25) All documents which relate to the claim or to any sub-claim, together with all documents that support the amount of damages as to each claim or sub-claim.
(26) Worksheets used to prepare the claim, which indicate the cost components of each item of the claim, including but not limited to the pertinent costs of labor, benefits and insurance, materials, equipment, and subcontractors' damages, as well as all documents which establish the relevant time periods, individuals involved, and the Project hours and the rates for the individuals.
(27) The name, function, and pertinent activity of each Contractor's or subcontractor's official, or employee involved in or knowledgeable about events that give rise to, or facts that relate to, the claim.
(28) The amount(s) of additional compensation sought and a break-down of the amount(s) into the categories specified as payable under Article 1.11.04 above.
(29) The name, function, and pertinent activity of each Department official, employee or agent involved in or knowledgeable about events that give rise to, or facts that relate to, the claim.

CONNECTICUT
SUPPLEMENTAL SPECIFICATION
SECTION 1.20
GENERAL CLAUSES FOR FACILITIES CONSTRUCTION

Delete the entire Section and replace it with the following:

SECTION 1.20
GENERAL CLAUSES FOR FACILITIES CONSTRUCTION

SECTION 1.20—1.00
FACILITIES CONSTRUCTION - GENERAL

1.20-1.00—Facilities Construction - General

1.20-1.00—Facilities Construction - General: Facilities Construction is defined as the type of construction that requires the issuance of a Certificate of Compliance (C.O.C.) by the State Building Inspector at the completion of a Project, and includes site work considered ancillary to this type of construction.

SECTION 1.20-1.01
DEFINITION OF TERMS AND PERMISSIBLE ABBREVIATIONS FOR FACILITIES CONSTRUCTION

1.20-1.01.00—Facilities Construction - Definitions
1.20-1.01.02—Facilities Construction - Abbreviations, Publications and Standards
1.20-1.01.03—Facilities Construction - Abbreviations and Terms

1.20-1.01.01—Facilities Construction - Definitions: In these specifications, unless the context requires otherwise, words of the masculine gender include the feminine and the neuter, and, when the sense so indicates, words of the neuter gender may refer to any gender. Where appropriate, words in the singular form shall be deemed to include the plural, and words in the plural form to include the singular.

ADDENDUM: Contract revisions developed and incorporated into the contract after bid advertisement and before the opening of bid proposals.

AIR OPERATIONS AREA: Any paved or unpaved area of the airport used or intended to be used for the unobstructed movement of aircraft. These movements shall include landings, takeoffs, and surface maneuverings.

AWARD: The Department's acceptance in writing of the proposal of the lowest responsible bidder for the work, subject to the execution and approval by the Department of a contract therefor and the provision by the bidder of performance and payment bonds to secure the performance thereof which are acceptable to the Commissioner, and to such other conditions as may be specified by the Department or required by law.

BID: The submission of a proposal for the work contemplated.

BID ADVERTISEMENT: A public announcement soliciting bids for a contract for work to be performed or materials to be furnished.
BIDDER: Any individual, firm, partnership, corporation, or combination thereof, submitting a proposal for the work contemplated, acting directly or through a duly authorized representative
BID MANUAL: "The State of Connecticut Department of Transportation Construction Contract Bidding and Award Manual," copies of which are available from the Department's Division of Contracts.
CALENDAR DAY: Every day shown on the calendar, Sundays and holidays included.
CATALOG CUT (PRODUCT DATA): Document(s) with information such as manufacturer's product specifications, manufacturer's installation instructions, standard color charts, wiring diagrams showing factory-installed wiring, printed performance curves and operational range diagrams. Product data that must be specially prepared because standard printed data is not suitable shall be considered shop drawings.
CERTIFICATE OF COMPLIANCE: The formal document issued at the completion of a project by the State Building Inspector. The document is often referred to informally as a "Certificate of Occupancy," "C.O.C." or "C.O."
CHANNEL: A channel shall be interpreted to mean a natural or artificial watercourse having an average width at the bottom, after excavation, of 4 feet or more.
COMMISSIONER: State of Connecticut Transportation Commissioner acting directly or through a duly-authorized representative.
CONNECTICUT GUIDELINES FOR SOIL EROSION AND SEDIMENT CONTROL: This Department of Energy and Environmental Protection (DEEP) Bulletin is intended to provide information to government agencies and the public on soil erosion and sediment control.
http://www.ct.gov/deep/cwp/view.asp?a=2720&q=325660&deepNav_GID=1654%20
CONNECTICUT STORMWATER QUALITY MANUAL: This DEEP publication provides guidance on measures necessary to protect waters of the State from adverse impacts of post-construction stormwater runoff.
http://www.ct.gov/deep/cwp/view.asp?a=2721&q=325704&depNav_GID=1654%20-%20download
CONSTRUCTION ORDER, CHANGE ORDER: A written order signed by the Engineer for a contractor to perform work or provide supplies stipulated therein at the price or upon the basis of payment set forth therein.
CONTRACT: The agreement covering the performance of the work and the furnishing of materials required for the construction of the Project. The Contract shall be deemed to include the "Plans," "Specifications" (*i.e.*, the edition of the Department's "Standard Specifications for Roads, Bridges, Facilities and Incidental Construction" which is in effect on the date of the Bid Advertisement), "Construction Orders," and such other provisions as may be incorporated into the agreement, in addition to the contents of the bound contract containing the schedule of prices, signature sheet, addenda, special provisions, required federal and state provisions, supplemental specifications, labor and wage schedules and other such material.
CONTRACTOR: When the word is capitalized, the party of the second part to the Contract, acting directly or through its agents or employees. When this word is not

capitalized, it is to be taken in its more general sense.
CULVERT: A covered channel or a large pipe for carrying a watercourse below ground level, usually under a road or railway.
DEPARTMENT: State of Connecticut Department of Transportation.
DESIGNER: A duly-authorized representative of the Engineer, responsible for the design of the Project.
DRAINAGE DITCH: An unpaved, artificially-constructed open depression having an average width of less than 4 feet at the bottom, after excavation, constructed for the purpose of carrying off surface water.
ENGINEER: The Commissioner or Deputy Transportation Commissioner, acting directly or through a duly-authorized representative.
EXECUTION OF CONTRACT: The date of execution of the Contract by the Department is the date on which the Department's authorized signatory signs the Contract on behalf of the Department.
EQUAL: A material, device, type of equipment, or method other than what is specified in the Contract, which is a recognized equivalent in substance and function for that specified thing, taking into account warranty, performance, weight, size, visual effect, specific features and requirements indicated, quality, workmanship, economy of operation, durability, and suitability for purposes intended, provided that the proposed equivalent would not require or constitute a change in Contract work.
FIXED COSTS: Any labor, material and equipment costs directly incurred for the item or items under consideration, which are necessary for the fulfillment of Contract requirements and which remain constant regardless of the quantity of the work done.
HIGHWAY: A general term denoting a public way used for vehicular travel. When referred to in the Contract, it signifies the whole right of way reserved for or secured by the Department for use in constructing or maintaining a roadway and its appurtenances.
INSPECTOR: A duly-authorized representative of the Engineer, assigned to make inspections of the work performed and materials furnished by the Contractor.
LABORATORY: Unless another laboratory or type of laboratory is indicated, the official testing laboratory of the Department.
LIQUIDATED DAMAGES: The amount prescribed in the Contract specifications, to be paid to the State or to be deducted from any payments due or to become due the Contractor, for a specified time unit delay in completing the whole or any specified portion of the work beyond the time allowed in the Contract.
MAJOR AND MINOR ITEMS: The original Contract item of greatest cost, computed at the original Contract price and quantity, and such other original Contract items next in sequence of lower cost, computed at original Contract price and quantity, necessary to equal a total cost at the original prices and quantities of not less than 60 percent of the original aggregate Contract cost shall be considered to be a major item or major items. All other original items shall be considered to be minor items.
MAJOR LUMP SUM ITEM (MLSI): The original Contract item(s) that includes all work depicted on the Contract Plans, described in the Contract Specifications, or is otherwise required for performance and completion of the work, including mobilization and project closeout, but not including any unit price or other lump sum items listed in the Bid Proposal Form.

MANAGER OF CONTRACTS: The Transportation Manager of Contracts, who is the head of the Department's Division of Contracts, and whose office is located at the headquarters of the Department at 2800 Berlin Turnpike, Newington, CT.
MATERIAL: Any substance specified in the Contract for use in the construction of the Project, including appurtenances of products that are substantially shaped, cut, worked, mixed, finished, refined or otherwise fabricated, processed, or installed to form a part of the work.
MUNICIPALITY: City, town or county.
NOTICE TO PROCEED: A written notice issued by the Engineer to the Contractor stating the date on which the Contractor is authorized to commence and proceed with the Contract work.
OWNER: Where used herein, it is synonymous with Department or State.
PAVEMENT STRUCTURE: The combination of sub-base, base course and surface course placed on subgrade to support and distribute the traffic load.
PLANS: All drawings or reproductions of drawings supplied by the Department to the Contractor pertaining to the construction or details of the Project.
A. Standard Sheets – Standardized plans containing details approved by the Department and the FHWA, for construction of a given type on any project, included in contracts on an as-needed basis.
PRODUCT DATA (CATALOG CUT): Document(s) with information such as manufacturer's product specifications, manufacturer's installation instructions, standard color charts, wiring diagrams showing factory-installed wiring, printed performance curves and operational range diagrams. Product data that must be specially prepared because standard printed data is not suitable shall be considered shop drawings.
PROJECT: All work included under one Department contract, notwithstanding the occasional use by the Department of multiple project numbers for the work included within one contract.
PROJECT SITE (*or* SITE): The space available to the Contractor, under the Contract, for performing construction activities. The extent of the Project site is as indicated on the plans or elsewhere in the Contract.
QUALIFIED PRODUCTS LIST (QPL): A report that has been developed as a means for determining what products, suppliers, manufacturers, equipment and methodologies may be used on construction projects. This report can be located on the CT Department of Transportation Website:

http://www.ct.gov/dot/cwp/view.asp?a=1387&q=259630

RECLAIMED CONCRETE AGGREGATE: Reclaimed waste consisting of crushed and graded concrete removed from pavements, structures, or buildings. Metal may be acceptable only where it is contained as reinforcement within small fragments of concrete; *e.g.,* metal projecting from concrete fragments would be unacceptable. All such material trucked from beyond the limits of the Project must be accompanied by a materials certificate and certified test report indicating that the material is environmentally acceptable and structurally sound in accordance with Article 1.20-1.06.07, unless the source of the material is a Department Project and that source is acceptable to the Engineer.
RECLAIMED MISCELLANEOUS AGGREGATE: Glass-free and clinker-free reclaimed

waste, which has been crushed, graded and blended, as specified in the Contract, with natural crushed stone or gravel. Metal may be acceptable only where it is contained as reinforcement within small fragments of concrete; *e.g.*, metal projecting from concrete fragments would be unacceptable. All such material trucked from beyond the limits of the Project must be accompanied by a materials certificate and certified test report indicating that the material is environmentally acceptable and structurally sound in accordance with Article 1.20-1.06.07, unless the source of the material is a Department Project and that source is acceptable to the Engineer.

RECLAIMED WASTE: Debris from the demolition of buildings, structures, and pavements; residue from incineration and recycled glass. Acceptable material shall include concrete, bituminous concrete, glass, ceramics, brick, pavement sub-base and base courses, and clinker from resource recovery plants. Metal may be acceptable only when it is contained within large fragments of concrete. Reclaimed waste trucked from beyond the limits of the Project must be accompanied by a materials certificate and certified test report indicating that the waste is environmentally acceptable and structurally sound in accordance with Article 1.20-1.06.07, unless the source of the material is a Department Project and that source is acceptable to the Engineer.

RIGHT-OF-WAY: A general term denoting land, property of interest therein, usually in a strip, acquired for or devoted to transportation purposes.

ROADBED: The graded portion of a highway, including portions within the top and side slopes, which have been prepared as a foundation for the pavement structure and shoulders.

ROADWAY: The portion of the highway, including shoulders, which may be used for vehicular travel within the Project limits.

SHOP DRAWINGS: Drawings, including proposed details, diagrams, schedules, procedures and other supporting data, prepared by a Contractor to supplement the Contract documents, showing all information necessary for fabrication of items for which some specific design or detail appears in the Contract.

SHOULDER: The portion of the roadway adjacent to the traveled way, that can accommodate stopped vehicles for emergency use, and that provides lateral support of base and surface courses.

SPECIFICATIONS: The Department's written provisions and requirements for the performance of the Contract, contained in or incorporated by the Contract.

A. *Standard Specifications*—A book of specifications published and approved by the Department for general application and repetitive use, available from the Manager of Contracts and entitled the "Standard Specifications for Roads, Bridges, Facilities and Incidental Construction."
B. *Supplemental Specifications*—Approved additions to and revisions of the Standard Specifications.
C. *Special Provisions*—Other Department specifications applicable to an individual project.

STATE: State of Connecticut.

SUBCONTRACTOR: Any individual, firm, partnership or corporation to which the Contractor sublets, with the approval of the Commissioner, any part or parts of the Project covered by the Contract.

SUBSTANTIAL COMPLETION: The date at which the performance of all work on the Project has been completed except minor or incidental items, final cleanup, work required under a warranty, and repair of unacceptable work, and provided the Engineer has determined that:

A. The Project is safe and convenient for use by the public, and
B. All traffic lanes including all safety appurtenances are in their final configuration, and
C. Failure to complete the work and repairs excepted above does not result in the deterioration of other completed work, and provided further, that the value of work remaining to be performed, and cleanup is less than one percent (1%) of the estimated final Contract amount, and
D. A Certificate of Compliance has been issued.

SUBSTITUTE: A replacement for a specified material, device, type of equipment, or method, which is sufficiently different in substance and function, quality, or workmanship to constitute a change in the Contract work.

SUBSTRUCTURE: All of that part of the bridge below the bearings of simple and continuous spans, skewbacks of arches and tops of footings of rigid frames, including backwalls, wingwalls and any protective railings mounted on the wingwalls.

SUB-SUBCONTRACTOR: Any individual, firm, partnership or corporation to which a subcontractor sublets, with the approval of the Commissioner, any part or parts of the Project covered by the Contract.

SUPERSTRUCTURE: The entire bridge except the substructure.

UTILITY: Any public service company and the plant of such a company or similar facilities. Such companies may consist of, but not be limited to, companies selling or controlling the sale, distribution or use of water, gas, electricity, communications systems, sewers and railroad lines. Such facilities may consist of, but not be limited to, wires, cables, ducts, pipes, manholes, transformers, poles, towers and tracks.

WORK: The provision of labor, materials or services necessary for or relating to the design and construction of the Project.

WORKING DRAWINGS: Drawings, calculations, procedures and other supporting data prepared by a Contractor, documenting the Contractor's proposed design, details, materials, construction methods and equipment for any construction for which no specific design or detail appears in the Contract.

1.20-1.01.02—Facilities Construction - Abbreviations, Publications and Standards: Whenever one of the following abbreviations is used in the Contract, its meaning shall be interpreted as follows:

AA—(The) Aluminum Association, Inc.
AABC—Associated Air Balance Council
AAMA—American Architectural Manufacturers Association
AAPA—American Association of Port Authorities
AASHTO—American Association of State Highway and Transportation Officials: Wherever reference is made to an AASHTO Standard Method of Test or Standard Specification, it refers by letter and number to the method or specification published by AASHTO in the "Standard Specifications for Transportation Materials and Methods of

Sampling and Testing". The edition governing the work shall be in effect on the date the Contract was advertised for solicitation of bids shall govern.
ABMA—American Bearing Manufacturers Association
ACGIH—American Council of Government Industrial Hygienists
ACI—ACI International (American Concrete Institute)
ADAAG—Americans with Disabilities Act (ADA) Accessibility Guidelines for Buildings and Facilities
ADSC—The International Association of Foundation Drilling (formerly Association of Drilled Shaft
Contractors)
AF&PA—American Forest & Paper Association
AGA—American Gas Association
AGC—(The) Associated General Contractors of America
AHA—American Hardboard Association
AHAM—Association of Home Appliance Manufacturers
AI—Asphalt Institute
AIA—(The) American Institute of Architects
AISC—American Institute of Steel Construction
AISI—American Iron and Steel Institute
AITC—American Institute of Timber Construction
A.L.I.—Automotive Lift Institute
ALSC—American Lumber Standard Committee, Incorporated
AMCA—Air Movement and Control Association International, Inc.
AMRL—AASHTO Materials Reference Library
ANLA—American Nursery and Landscape Association
ANSI—American National Standards Institute
AOAC—AOAC International
AOSA—Association of Official Seed Analysts
APA—APA-The Engineered Wood Association
API—American Petroleum Institute
AREMA—American Railway Engineering and Maintenance-of-Way Association
ARI—Air-Conditioning & Refrigeration Institute
ARTBA—American Road and Transportation Builders Association
ASA—Acoustical Society of America
ASC—Adhesive and Sealant Council
ASCE—American Society of Civil Engineers
ASHRAE—American Society of Heating, Refrigerating and Air-Conditioning Engineers
ASME—ASME International (The American Society of Mechanical Engineers International)
ASNT—American Society for Non-Destructive Testing
ASSE—American Society of Sanitary Engineering
ASTM—American Society of Testing and Materials (ASTM International): Wherever reference is made to an ASTM specification, test method, or practice, it refers by letter, number, or both to standards published by ASTM International in the "ASTM Standards Source™ Database". The edition governing the work shall be in effect on the date the

Contract was advertised for solicitation of bids shall govern.
ATSSA—American Traffic Safety Services Association
AWI—Architectural Woodwork Institute
AWPA—American Wood-Preservers' Association
AWPI—American Wood Preservers Institute
AWS—American Welding Society: Wherever reference is made to an AWS materials specification, inspection methods, or welding procedures, it refers by section number to standards of the American Welding Society published in the applicable steel, or aluminum welding code. The edition governing the work shall be in effect on the date the Contract was advertised for solicitation of bids shall govern.
AWWA—American Water Works Association
BHMA—Builders Hardware Manufacturers Association
BIA—(The) Brick Industry Association
CBM—Certified Ballast Manufacturers Association
CCRL—Cement and Concrete Reference Laboratory
CDA—Copper Development Association (The)
CGA—Compressed Gas Association
CISCA—Ceilings and Interior Systems Construction Association
CLFMI—Chain Link Fence Manufacturers Institute
ConnDOT—Connecticut Department of Transportation
CFR—Code of Federal Regulations
CGS—Connecticut General Statutes (as revised)
CISPI—Cast Iron Soil Pipe Institute
CRI—(The) Carpet and Rug Institute
CRSI—Concrete Reinforcing Steel Institute
CSI—(The) Construction Specifications Institute
CSSB—Cedar Shake & Shingle Bureau
CTI—Cooling Technology Institute
DASMA—Door and Access Systems Manufacturers Association, International
DEEP—Connecticut Department of Energy and Environmental Protection
DHI—Door and Hardware Institute
DOD—Department of Defense Military Specifications and Standards
EIA—Electronic Industries Alliance
EPA—Environmental Protection Agency
FAA—Federal Aviation Administration
FCC—Federal Communications Commission
FCICA—Floor Covering Installation Contractors Association
FHWA—Federal Highway Administration
FMG—FM Global
FRA—Federal Railway Administration
FS—Wherever reference is made to FS in the contract, it refers by number, letter, or both, to the latest standard or tentative standard of the Federal Specification Unit, General Services Administration, Federal Supply Service, as to materials, specifications, or methods of testing, whichever the case may be.
FTA—Federal Transit Administration

GA—Gypsum Association
GANA—Glass Association of North America
GSA—General Services Administration
HI—Hydraulics Institute
HPVA—Hardwood Plywood & Veneer Association
ICC—International Code Council
ICC-ES—ICC Evaluation Service, Inc.
ICEA—Insulated Cable Engineers Association, Inc.
IEC—International Electrotechnical Commission
IEEE—(The) Institute of Electrical and Electronics Engineers, Inc.
IES—Illuminating Engineers Society
IESNA—Illuminating Engineering Society of North America
IGCC—Insulating Glass Certification Council
IGMA—Insulating Glass Manufacturers Alliance
IMSA—International Municipal Signal Association
IRI—HSB Industrial Risk Insurers
ISO—International Organization for Standardization
ITE—Institute of Traffic Engineers
KCMA—Kitchen Cabinet Manufacturers Association
LMA—Laminating Materials Association
LPI—Lightning Protection Institute
MASH—Manual for Assessing Safety Hardware
MBMA—Metal Building Manufacturers Association
MILSPEC—Military Specification and Standards
MMA—Monorail Manufacturers Association
MSHA—Mine Safety and Health Administration
MSS—Manufacturers Standardization Society of The Valve and Fittings Industry, Inc.
MUTCD—Manual on Uniform Traffic Control Devices
NAAMM—National Association of Architectural Metal Manufacturers
NADCA—National Air Duct Cleaners Association
NAIMA—(The) North American Insulation Manufacturers Association
NBFU—National Board of Fire Underwriters
NCHRP—National Cooperative Highway Research Program
NCMA—National Concrete Masonry Association
NCPI—National Clay Pipe Institute
NEBB—Natural Environmental Balancing Bureau
NEC—National Electrical Code
NECA—National Electrical Contractors Association
NEMA—National Electrical Manufacturers Association
NEPCOAT—North East Protective Coatings Committee
NESC—National Electrical Safety Code
NETA—InterNational Testing Association
NETTCP—NorthEast Transportation Technician Certification Program
NFPA—National Fire Protection Association
NFRC—National Fenestration Rating Council

NHLA—National Hardwood Lumber Association
NICET—National Institute for Certification in Engineering Technologies
NIOSH—National Institute of Occupational Safety and Health
NIST—National Institute of Standards and Technology
NLGA—National Lumber Grades Authority
NOAA—National Oceanic and Atmospheric Administration
NRCA—National Roofing Contractors Association
NSF—NSF International
NTMA—National Terrazzo and Mosaic Association, Inc.
OEO—Office of Equal Opportunity
OSHA—Occupational Safety and Health Administration
PCA—Portland Cement Association
PCI—Precast/Prestressed Concrete Institute
PDI—Plumbing & Drainage Institute
PTI—Post-Tensioning Institute
PURA—Public Utilities Regulatory Authority
RFCI—Resilient Floor Covering Institute
RMA—Rubber Manufacturers Association
SAE—SAE International (formerly Society of Automotive Engineers)
SDI—Steel Deck Institute *or* Steel Door Institute
SFPA—Southern Forest Products Association
SHRP—Strategic Highway Research Program
SJI—Steel Joist Institute
SMACNA—Sheet Metal and Air Conditioning Contractors National Association
SPIB—(The) Southern Pine Inspection Bureau
SPRI—Single Ply Roofing Institute SSPC—Where reference is made to SSPC in the Contract, it refers by number, letter, or both, to the latest standard or tentative standard specification of The Society for Protective Coatings, Formerly the Steel Structures Painting Council, as to materials specifications, methods of testing, systems, procedures, inspection or other specification pertaining to any or all phases of cleaning or painting, whichever may apply.
SWRI—Sealant, Waterproofing, & Restoration Institute
TCA—Tile Council of America, Inc.
TIA—Telecommunications Industry Association
TIA/EIA—Telecommunications Industry Association/Electronics Industries Alliance
TPI—Truss Plate Institute, Inc.
TRB—Transportation Research Board
UFAS—Uniform Federal Accessibility Standards
UL—Underwriters Laboratories Inc.
USDA—United States Department of Agriculture
USGBC—U.S. Green Building Council
WCLIB—West Coast Lumber Inspection Bureau
WCSC—Window Covering Safety Council
WDMA—Window & Door Manufacturers Association
WWPA—Western Wood Products Association

1.20-1.01.03—Abbreviations and Terms: Abbreviations and terms used in the Contract are in lieu of and are to be construed in the same way as are the terms or phrases following them in the list below. Those abbreviations and terms include, but are not necessarily limited to:

ABS—acrylonitrile butadiene styrene
AC—alternating current
ACCM Pipe or ACCMP—Asphalt-Coated Corrugated Metal Pipe
ACSR—Aluminum Conductor, Steel Reinforced
AIC—Ampere Interrupting Current
AOEC—Area of Environmental Concern
APA—Aquifer Protection Area
AWG—American Wire Gauge
B & B—balled and burlapped
bbl—barrel
BCPC—Bituminous Concrete Park Curbing
Bit.—bituminous
Bit. Conc.—bituminous concrete
CAS—Coating Applicator Specialist
CB—catch basin
CCM Pipe or CCMP—coated corrugated metal pipe
CICU—controller interface communications unit1
CLLCU—closed loop local coordination unit
CLMU—closed loop master unit
CMS—Changeable Message Sign
Conc.—concrete
CPE Pipe or CPEP—corrugated plastic or polyethylene pipe
CPS—centipoise second
CWI— Certified Welding Inspector
cwt.—hundredweight or 100 pounds
DC—direct current
dist.—distillation
DMT—Division of Materials Testing
DTI—Direct Tension Indicator
EW—endwall
est.—estimated
exc—excavation
fi—jacking tension
FRC—Fiberglass Reinforced Composite
f’ c—specified minimum compressive strength at a specified age
f' ci—required strength at time of transfer
ga—gauge or gage
Gsa—Apparent specific gravity
Gsb—Bulk specific gravity
HASP—Health and Safety Plan
HMA—hot mix asphalt or bituminous concrete

JMF—job mix formula
kip—1000 pounds
ksf—kips per square foot
LED—light-emitting diode
l.s.—lump sum
mbf—1000-foot board measure
MBR—metal beam rail
Mgal—1000 gallons
MH—manhole
MSDS—Material Safety Data Sheet(s)
MPT—Maintenance and Protection of Traffic
N.C.—National Coarse
NDT—non-destructive testing
Pavt.—pavement
PCBC—precast concrete barrier curb
PCC—Portland Cement Concrete
PE—polyethylene
Perf. ACCM Pipe or Perf. ACCMP—Perforated Asphalt-Coated Corrugated Metal Pipe
Perf. CCM Pipe or Perf. CCMP—Perforated Coated Corrugated Metal Pipe
Perf. CPE Pipe or Perf. CPEP—Perforated Corrugated Plastic or Polyethylene Pipe
pfmd.—preformed
PROM—programmable read only memory
psf—pounds per square foot
psi—pounds per square inch
p/s—prestressed
PVC—polyvinyl chloride
Pwa—Percent water absorbed
RAP—reclaimed asphalt pavement
RC—Reinforced Concrete
RCCE—Reinforced Concrete Culvert End
RC Pipe *or* RCP—Reinforced Concrete Pipe
SD—system detector
sec.—second
sol.—soluble
sp. gr.—specific gravity
sp. visc.—specific viscosity
SSA—Sole Source Aquifer
std.—standard
surf.—surface
TDC—Transportation Division Chief
THHN—Heat resistant thermoplastic, insulated nylon jacket, 90 degrees Centigrade, 600 volt building wire
THWN—Moisture and heat resistant thermoplastic, insulated nylon jacket, 75 degrees Centigrade, 600 volt building wire
TL—Test Level

TMA—Truck Mounted Impact Attenuator
TMP—Transportation Management Plan
tsf—tons per square foot
TTC—Temporary Traffic Control
U'drain *or* Udrain—Underdrain
UTCS—urban traffic control system
UV—ultra-violet or ultra violet light
VAC—Volts Alternating Current
VMS—Variable Message Sign
VOC—Volatile Organic Compound
VT—vitrified tile
W—watt
WSA—Temporary Waste Stockpile Area

SECTION 1.20-1.02
PROPOSAL REQUIREMENTS AND CONDITIONS FOR FACILITIES CONSTRUCTION

1.20-1.02.01—Facilities Construction - Contract Bidding and Award
1.20-1.02.02—Facilities Construction - Vacant
1.20-1.02.03—Facilities Construction - Interpretation of Estimate
1.20-1.02.04—Facilities Construction - Examination of Plans, Specifications, Special Provisions and Site of Work
1.20-1.02.05—Facilities Construction - Vacant
1.20-1.02.06—Facilities Construction - Vacant
1.20-1.02.07—Facilities Construction - Vacant
1.20-1.02.08—Facilities Construction - Vacant
1.20-1.02.09—Facilities Construction - Vacant
1.20-1.02.10—Facilities Construction - Vacant
1.20-1.02.11—Facilities Construction - Vacant
1.20-1.02.12—Facilities Construction - Vacant
1.20-1.02.13—Facilities Construction - Knowledge of Applicable Laws
1.20-1.02.14—Facilities Construction - Vacant
1.20-1.02.15—Facilities Construction - Vacant

1.20-1.02.01—Facilities Construction – Contract Bidding and Award: All bids for construction contracts must be submitted electronically. It is the responsibility of each bidder and all other interested parties to obtain all bidding related information and documents from the Department of Administrative Services (DAS) State Contracting Portal.

Connecticut Department of Transportation bidding and other information and documents which are obtained from any other source must not be submitted to the Department. Reproduced, reformatted or altered forms of documents are not authorized or acceptable.

For information about the bidding and award of Department construction contracts, consult the “State of Connecticut Department of Transportation Construction Contract

Bidding and Award Manual," available from the Division of Contracts. In order to be eligible for award of a Department construction contract, a bidder must follow the requirements of this Bid Manual, and all bidding and award matters regarding Department construction contracts shall be governed by the terms of the Bid Manual, unless treated otherwise in the Contract, including these Specifications.

1.20-1.02.02—Facilities Construction - Vacant

1.20-1.02.03—Facilities Construction - Interpretation of Estimate: The quantities shown on the proposal form are approximate only and are given as a basis for the pricing upon which the award of the Contract will be made. The Department does not warrant that these quantities shall remain unchanged in the actual construction, and the Contractor may not plead misunderstanding or deception because of any variation between estimated and final quantities. The Engineer reserves the right to increase or decrease any or all of the quantities shown on the proposal form as may be necessary to properly complete the Project.

The Department will pay for the actual quantity of authorized and accepted work done or material furnished under each of the items.

1.20-1.02.04—Facilities Construction - Examination of Plans, Specifications, Special Provisions and Site of Work: The bidder is required to examine carefully the site of the Contract work and the proposal form, plans, special provisions, specifications, supplemental specifications, Contract form and other Contract documents for the work contemplated, as well as any permits or permit applications that are likely to affect the Contract work. The bidder must judge for itself and satisfy itself as to the conditions to be encountered; the character, quality and quantities of the work to be performed; the materials to be furnished; and the requirements of the above documents, particularly the requirements under each Contract item, under the general cost of the work, or under other applicable, but more general, provisions, of the Contract.

The subsurface information furnished in the Contract is based on the interpretation, by the Department, of investigations made only at the specific locations indicated; and the Department gives no assurance that the conditions discovered are typical of the conditions at other Project site locations or that those conditions will have remained unchanged since the field data were obtained. The Department also gives no assurance that the presence or absence of subsurface water at the time and locations of these explorations will be representative of actual conditions at the time of construction. Such subsurface information as was obtained by the Department for its use in the design of the Project will be available for inspection by bidders through the Division of Contracts. Also, bidders may arrange through the Division of Contracts an opportunity to examine, in advance of bidding, at a location to be specified by the Department, any available samples of the materials encountered in the Department's subsurface explorations. The Contractor shall be solely responsible for all assumptions, deductions, or conclusions it may make or derive from its examination of any

Department subsurface information, document or sample. In furnishing or making available such information, the Department makes no warranty or representation as to the actual conditions that may be encountered or actual quantities or distribution of quantities of work that will be required in the course of the Project.

The Department does not intend or warrant that plan sheets furnished to the State by utility companies whose facilities may be affected by the proposed construction will show all proposed utility work that will be done by utility companies or municipal authorities or both before, during, or after the life of this Contract. In addition to the work indicated on such plan sheets, the utility companies and authorities may make adjustments to or remove certain of their installations other than those indicated on the plans, or may install facilities not so indicated.

Bidders must inform the Department in writing, at the earliest opportunity, of any and all omissions, errors, and/or discrepancies that the bidder discovers within or among the plans, specifications, and bidding documents. Information and inquiries concerning such matters, and any other information or inquiry concerning the conditions of bidding or award or the interpretation of contract documents, must be transmitted in writing to the Manager of Contracts, Connecticut Department of Transportation, P. O. Box 317546, Newington, Connecticut 06131-7546. The Department cannot ensure a response to inquiries received later than ten (10) days prior to the scheduled opening of the related bid. When the Department deems it warranted, responses to such inquiries that relate to changes in or interpretations of the Project documents (plans and specifications) will be issued to all bidders in the form of addenda and made a part of the Contract. Bidders are responsible for ensuring that they are aware of all addenda. Failure by the Department or postal or other courier services to deliver addenda or other information regarding a Contract being bid does not release the bidder from any obligations under said addenda or the conditions of the bid.

CSI-formatted specifications are organized into Divisions and Sections based on the CSI's "MasterFormat" numbering system. CSI-formatted specifications use certain conventions for the style of language and the intended meaning of certain terms, words, and phrases when used in particular situations. These conventions are as follows:

(a) Language used is abbreviated. Words and meanings shall be interpreted as appropriate. Words implied, but not stated, shall be interpreted as the sense requires. Singular words shall be interpreted as plural and plural words shall be interpreted as singular where applicable as the context indicates.

(b) Imperative mood and streamlined language are generally used. Requirements expressed in the imperative mood are to be performed by the Contractor. Subjective language is used for clarity to describe responsibilities that must be fulfilled indirectly by the Contractor or by others when so noted.

(c) The words "shall," "shall be," or "shall comply with" are implied where a colon (:) is used within a sentence or phrase.

1.20-1.02.05—Facilities Construction - Vacant

1.20-1.02.06—Facilities Construction - Vacant

1.20-1.02.07—Facilities Construction - Vacant

1.20-1.02.08—Facilities Construction - Vacant

1.20-1.02.09—Facilities Construction - Vacant

1.20-1.02.10—Facilities Construction - Vacant

1.20-1.02.11—Facilities Construction - Vacant

1.20-1.02.12—Facilities Construction - Vacant

1.20-1.02.13—Facilities Construction - Knowledge of Applicable Laws: Bidders shall be deemed to know and understand all federal, state and local laws, ordinances and regulations and municipal bylaws which in any manner apply to projects for which they bid; such legal requirements shall include, but not necessarily be limited to, those which apply to the conduct of the Contract work, the equipment and materials to be used on the Project, or the treatment of individuals or classes of individuals in relationship to their involvement with the Project. A Contractor's ignorance of such requirements shall not, in any internal Department proceeding or in any claims or other legal proceeding, constitute justification for the Contractor's failure to consider such requirements in formulating a bid proposal, or for the Contractor's failure to ensure that such legal requirements are met with regard to any Department project in which that Contractor participates.

The Contractor agrees that if it should be awarded the contract for any project supported at least in part by federal funding, the Contractor will not knowingly enter into any lower-tier transaction on that project with a person (including entities) who, by virtue of federal law or regulation, or by voluntary agreement, is currently ineligible to participate in such a project, unless after disclosure of such ineligibility, such participation is authorized by appropriate federal and State authorities.

The Department expects the Contractor to obey municipal laws and regulations and cooperate with municipal officials. In some instances, however, municipal laws or regulations, or the orders of municipal officials, may conflict with necessary Project activities. In most such cases, the municipality does not have the legal power to enforce its laws and regulations upon the State or upon a State project. This is because the State is protected by its sovereign immunity. If local police or other authorities should attempt to stop the Contractor from carrying out activities that are necessary in order for the Contractor to comply with Contract requirements, the Contractor should politely inform the municipal authorities that they probably do not have jurisdiction over the State’s project, and the Contractor should immediately inform the Engineer of the attempted interference with Project activities. If the municipal authorities continue to insist upon preventing the Contractor from carrying out Project activities, the Contractor should not defy the authorities, but, to the extent possible, should await directions from the Engineer.

All work to be performed by the Contractor shall comply with, as a minimum, the State Building Code as adopted pursuant to CGS 29-252, as amended; the State Fire Prevention Code as adopted pursuant to CGS 29-291a, as amended; and the Fire Safety Code as adopted pursuant to CGS 29-292, as amended.

The State Building Code, including latest Connecticut Supplements and Amendments, includes the following:

1. The 2012 International Building Code.
2. The 2012 International Plumbing Code.
3. The 2012 International Mechanical Code.
4. The 2012 International Existing Building Code.
5. The 2012 International Energy Conservation Code.
6. The 2012 NFPA 70 National Electrical Code.
7. The 2012 ICC/ANSI A117.1.

The State Fire Safety Code, including latest Connecticut Supplements and Amendments, includes the following:

1. The 2012 International Fire Code.
2. The 2012 NFPA 101 Life Safety Code.

The State Fire Prevention Code, including latest Connecticut Supplements and Amendments, includes the following:

1. The 2012 NFPA 1. Uniform Fire Code

The edition of the code governing the Project shall be the code which is in effect as per the above CGS Sections on the date that the Contract is advertised for solicitation of bids.

All work to be performed by the Contractor shall comply with the 2010 Department of Justice “ADA Standards for Accessible Design.”

1.20-1.02.14—Facilities Construction - Vacant

1.20-1.02.15—Facilities Construction - Vacant

SECTION 1.20-1.03
AWARD AND EXECUTION OF CONTRACT FOR FACILITIES CONSTRUCTION

1.20-1.03.01—Facilities Construction - Consideration of Bids
1.20-1.03.02—Facilities Construction - Award and Execution of Contract
1.20-1.03.03—Facilities Construction - Return of Proposal Guaranty
1.20-1.03.04—Facilities Construction - Requirements of Performance Contract Bond and Payment Bond
1.20-1.03.05—Facilities Construction - Vacant
1.20-1.03.06—Facilities Construction - Failure to Execute Contract
1.20-1.03.07—Facilities Construction - Insurance
1.20-1.03.08—Facilities Construction - Notice to Proceed and Commencement of Work

1.20-1.03.01—Facilities Construction - Consideration of Bids: See Article 1.20-1.02.01.

The apparent low bidder shall submit to the Manager of Contracts a Schedule of Values within 14 calendar days after bid opening. Any other Contractor that the Department may subsequently designate as the apparent lowest bidder shall make the aforesaid submission within 14 calendar days from the date on which the Department notifies said Contractor that it has become the apparent lowest bidder. If, however, the Department deems it necessary for such a subsequently designated Contractor to make said submission within a shorter period of time, the Contractor shall make the submission within the time designated by the Department.

The total in the Schedule of Values shall equal the bid dollar amount for the MLSI.

The Schedule of Values shall be divided into "Line Items" listed separately for each CSI Section of the Special Provisions. An additional line item for "Mobilization" may be incorporated into the Schedule of Values; however, this item may not exceed 7.5% of the value of the MLSI. The "Mobilization" line item will also include costs associated with "General Conditions," "Insurance/Bonding," and "Project Superintendent." An additional line item for "Project Closeout" shall be incorporated into the Schedule of Values; however, this item must be at least 2.5% of the value of the MLSI. Where requested by the Department, the Contractor shall breakdown the line items further into more specific line items.

In the event that this Contract is terminated or a portion of this Contract is deleted for any reason or in any way allowable by law under this Contract after the apparent low bidder has been awarded the Contract, the Schedule of Values will not be used for estimating payment due the Contractor for work completed prior to such termination of the Contract or deletion of work thereunder. In the case of Contract termination, payment shall be made in accordance with Article 1.20-1.05.14.

1.20-1.03.02—Facilities Construction - Award and Execution of Contract: Except as otherwise authorized by the Commissioner, all contracts will be awarded and executed in accordance with the order of the Commissioner. The award, if made, will be made within 60 days after the opening of the proposals unless otherwise agreed upon by the Commissioner, the successful bidder, and the surety. The successful bidder, upon receipt of notice from the Department that the contract is ready for execution, shall, at the time and place designated in said notice, be present in person or be represented by an official legally authorized to sign the Contract, and shall there and then sign the necessary Project contract with the State. No proposal shall be considered binding upon the State until the proper execution of the Contract by both parties.

1.20-1.03.03—Facilities Construction - Return of Proposal Guaranty: All proposal guaranties will be returned within 3 calendar days following the award of the Contract. Ten calendar days after the opening of the proposals, all guaranties, except those of the 3 lowest bidders, will be returned. Should no award be made within 60 calendar days after the opening of proposals, the Commissioner may reject all proposals and return

the proposal guaranties, except that with the approval of the lowest bidder and its surety, the Commissioner may extend the time for the award and may retain the proposal and proposal guaranty of the lowest bidder for said extended time, or for any other period of time agreed upon by the Commissioner, bidder and surety.

1.20-1.03.04—Facilities Construction - Requirements of Performance Contract Bond and Payment Bond: See Article 1.20-1.02.01.

In conformance with Section 49-41a of the Connecticut General Statutes, as revised, the Contractor (1) shall, within 30 days after any given Contract payment to the Contractor by the State, pay any amounts due any subcontractor, whether for labor performed or materials furnished, when charges for such labor or materials have been included in a payment estimate paid by the State; (2) and shall include in each of its subcontracts a provision requiring each subcontractor to pay any amounts due any of its subcontractors on the Project, whether for labor performed or materials furnished, within 30 days after such subcontractor receives a payment from the Contractor which encompasses labor or materials furnished by such subcontractor for the Project.

If the Contractor believes that it has a valid reason for withholding payment for particular work or materials from a subcontractor or supplier, then the Contractor, within 30 days of receiving payment from the State for that work or materials, shall notify the subcontractor or supplier and the Department of its reasons for withholding payment.

1.20.1.03.05—Facilities Construction - Vacant

1.20-1.03.06—Facilities Construction - Failure to Execute Contract: See Article 1.20-1.02.01.

1.20-1.03.07—Facilities Construction - Insurance:

Coverage shall be on a primary basis.

The Contractor shall carry and maintain at all times during the term of the Contract the insurance coverages required by this Article and any additional coverages(s) or higher minimum insurance coverage amount(s) required by the Special Provisions of the Contract.

If the Project includes work on or adjacent to railroad property additional insurance may be required as specified by the railroad. Please refer to the Special Provisions for any additional insurance requirements by the railroad.

1. Worker's Compensation Insurance: With respect to all operations the Contractor performs and all those performed for it by subcontractors, the Contractor shall carry, and require each subcontractor to carry, Workers' Compensation insurance as required by the laws of the State of Connecticut.

Employer's Liability insurance shall be provided in amounts not less than $100,000 per accident for bodily injury by accident; $100,000 policy limit by disease and $100,000 per employee for bodily injury by disease. Each Workers' Compensation policy shall contain the U.S. Longshoreman's and Harbor Workers' Act endorsement when work is to be performed over or adjacent to navigable water.

2. Commercial General Liability Insurance: With respect to the operations the

Contractor performs and also those performed for it by subcontractors, the Contractor shall carry, and require each subcontractor to carry, Commercial General Liability insurance, including Contractual Liability, Products and Completed Operations, Broad Form Property Damage and Independent Contractors.

Products and completed operations insurance for ongoing and completed operations shall be maintained for a period of one (1) year after the acceptance of the project by the Department in accordance with Article 1.20-1.08.14. See chart below for applicable minimum coverage amounts.

Contract Amount ($)	Minimum Single Occurrence Amount ($)	Minimum Annual Aggregate Amount ($)
0-2,000,000	1,000,000	2,000,000
>2,000,001-10,000,000	2,000,000	4,000,000
>10,000,000	4,000,000	8,000,000

Each policy shall have coverage for and exclusions removed for "Explosion, Collapse and Underground" ("XCU") if underground work is to be undertaken.

3. Automobile Liability Insurance: The Contractor shall obtain automobile liability insurance covering the operation of all motor vehicles, including those hired or borrowed, that are used in connection with the Project for all damages arising out of: (1) bodily injury to or death of all persons and/or (2) injury to or destruction of property; in any one accident or occurrence. This policy shall not be subject to an annual aggregate limitation. See chart above for applicable minimum coverage amounts.

4. Owner's and Contractor's Protective Liability Insurance for and in the Name of the State: With respect to the Contractor's Project operations and also those of its subcontractors, the Contractor shall carry, for and on behalf of the State for each accident or occurrence resulting in damages from (1) bodily injury to or death of persons and/or (2) injury to or destruction of property. See chart below for applicable minimum coverage amounts.

Contract Amount ($)	Minimum Single Occurrence Amount ($)	Minimum Annual Aggregate Amount ($)
0 - 20 Million	1,000,000	1,000,000
20 Million - 50 Million	2,000,000	2,000,000
> 50 Million	4,000,000	4,000,000

5. Railroad Protective Liability Insurance: When the Contract involves work within fifty (50) feet of the railroad right-of-way or State-owned rail property, with respect to Project operations and also those of its subcontractors, the Contractor shall carry Railroad Protective Liability Insurance providing coverage of at least $2,000,000 for each accident or occurrence resulting in damages from

(1) bodily injury to or death of all persons and
(2) injury to or destruction of property, and subject to that limit per accident or

occurrence, an aggregate coverage of at least $6,000,000 for all damages during the policy period, and with all entities falling within any of the following listed categories named as insured parties:

(i) the owner of the railroad right-of-way,

(ii) the owner of any railcar licensed or permitted to travel within that affected portion of railroad right-of-way, and

(iii) the operator of any railcar licensed or permitted to travel within that affected portion of the railroad right-of-way, and with the State, if not falling within any of the above-listed categories, also named as an insured party.

6. Blasting: When explosives are to be used in the Project, the Commercial General Liability insurance policy shall include XCU coverage, in the same limits as the per occurrence policy limits.

7. Protection and Indemnity Insurance for Marine Construction Operations in Navigable Waters:

If a vessel of any kind will be involved in Project work, the Contractor shall obtain the following additional insurance.

coverage:

A. Protection and Indemnity Coverage of at least $300,000 per vessel or equal to at least the value of hull and machinery, whichever is greater.

B. If there is any limitation or exclusion with regard to crew and employees under the protection and indemnity form, the Contractor must obtain and keep in effect throughout the Project a workers' compensation policy, including coverage for operations under admiralty jurisdiction, with a limit of liability of at least $300,000 per accident or a limit equal to at least the value of the hull and machinery, whichever is greater, or for any amount otherwise required by statute.

8. Builder's Risk Insurance: The Contractor shall maintain comprehensive replacement cost builder's risk (completed value) insurance providing coverage for the entire work at the Project site, including all fixtures, machinery and equipment, any heating, cooling and constituting a permanent part of the building and shall cover portions of work located away from the site, but intended for use at the site. If it is determined that all or a portion of the project is located within an area designated as a Special Flood Hazard Area, the Contractor shall maintain flood insurance (no less than $10,000,000 sublimit). The State of Connecticut shall be named as Loss Payee. Equipment breakdown coverage may be sub limited to 50% of the project cost.

9. Architects and Engineer's Professional Liability Insurance for Structural Engineer: If required, limits will be specified in Article 1.20-1.03.07 of the Special Provisions of the Contract or Article 1.20-1.05.02.

10. Umbrella Liability Insurance: The Contractor may satisfy the minimum limits required for Commercial General Liability and Automobile Liability Insurance using Umbrella Liability Insurance. In the event that the Contractor obtains Umbrella Liability Insurance to meet the minimum coverage requirements for Commercial General Liability or Automobile Liability Insurance coverage, the Umbrella Liability Insurance policy shall have an annual aggregate at a limit not less than twice the single occurrence and must specifically endorse the State of Connecticut as an additional insured. Specifically for Bridge Projects with a low bid equal to or higher than

$80,000,000, the Umbrella Liability Insurance policy must have a minimum limit of at least $25,000,000.

11. Certificate of Insurance: Before the Contract is executed, the Contractor must provide to the Department a certificate of insurance acceptable to the Commissioner and executed by an insurance company or companies satisfactory to the State of Connecticut for the insurance coverage(s) required by this Article and the Special Provisions of the Contract. The Contractor shall maintain the required insurance coverage during the entire term of the Contract. The certificate of insurance must clearly include the name of the insured and identify the project for which it is being issued.

12. Copies of Policies: The Contractor shall provide, within five (5) business days, a copy or copies of all applicable insurance policies when requested by the State. In providing said policies, the Contractor may redact provisions of the policy that are proprietary. This provision shall survive the expiration or termination of the Contract.

13. **Sovereign Immunity:** The Contractor may not assert the defense of sovereign immunity in the adjustment of claims or in the defense of any claim or suit brought against the Contractor or the State, unless the State, in writing, requests that the Contractor do so or consents to its doing.

14. Contractor Assumes Costs: The Contractor shall assume and pay all costs and billings for premiums, deductibles, self-insured retentions and audit charges earned and payable under the required insurance.

15. State Named as Additional Insured: The State must be named as an additional insured party for the Commercial General Liability and Automobile Liability insurance policies required by this Article and the Special Provisions to the Contract, and any Umbrella Liability Insurance, as applicable, obtained in accordance with this Article. Each policy shall waive right of recovery (waiver of subrogation) against the State of Connecticut.

16. Termination or Change of Insurance:

A. The Contractor shall notify the Department of any cancelation of insurance carrier or change to the required insurance coverage by submitting a new insurance certificate to the Department immediately following said cancelation or change in required coverage.

B. It is the responsibility of the Contractor to maintain evidence of a current insurance coverage with the Department for the duration of contract. It is the responsibility of the Contractor to file with the Department all renewals and new certificates of insurance issued due to changes in policy terms or changes in insurance carriers prior to the expiration dates on the forms already on file with the Department.

17. Duration of Coverage. The Contractor shall keep all the required insurance in continuous effect until the date that the Department designates for the termination of the Contractor's responsibility, as defined by Article 1.20-1.08.14.

18. Compensation: There shall be no direct compensation allowed the Contractor on account of any premium or other charge necessary to obtain and keep in effect any insurance or bonds in connection with the Project, but the cost thereof shall be considered included in the general cost of the Project work.

1.20-1.03.08—Facilities Construction - Notice to Proceed and Commencement of Work: The Contractor shall commence and proceed with the Contract work on the date specified in a written Notice to Proceed issued by the Engineer to the Contractor. The date specified will be no later than 45 calendar days after the date of the execution of the Contract by the Department.

If the Engineer does not issue a Notice to Proceed to the Contractor within the said 45 calendar days, the Contractor shall have the option of canceling the Contract and its payment and performance bonds for the Project. Any failure by the Department to issue a notice to proceed, or to issue one on a timely basis, shall not, however, constitute a breach of the Contract. Neither the Contractor nor any other party may use such a failure as a basis for any claim against the Department for damages.

The Contractor shall not begin physical Project construction prior to the date specified for same by the Engineer in the Notice to Proceed, except as may be otherwise authorized by the Engineer in writing.

SECTION 1.20-1.04
SCOPE OF WORK FOR
FACILITIES CONSTRUCTION

1.20-1.04.01—Facilities Construction - Intent of Contract
1.20-1.04.02—Facilities Construction - Increased or Decreased Quantities of Minor Items, and Elimination of Minor Items
1.20-1.04.03—Facilities Construction - Changes in Quantities and Significant Changes in the Character of Work
1.20-1.04.04—Facilities Construction - Differing Site Conditions
1.20-1.04.05—Facilities Construction - Extra Work
1.20-1.04.06—Facilities Construction - Removal and Disposal of Structures on the Work Site
1.20-1.04.07—Facilities Construction - Rights in and Use of Materials Found on the Work Site

1.20-1.04.01—Facilities Construction - Intent of Contract: The intent of the Contract is to prescribe a complete work or improvement that the Contractor undertakes and is required to do in full compliance with the specifications, plans, special provisions, proposal, and other Contract documents. The Contractor shall perform all Project work in conformity with the lines, grades, typical cross-sections, dimensions, and other data shown on the plans and other Contract documents, as they may be modified by written orders from the Engineer subsequent to the date of the Contract. Said work includes the furnishing of all materials, implements, machinery, equipment, tools, supplies, transportation, labor, and all other things necessary for the satisfactory prosecution and completion of the Project.

It is not the intent of the Contract plans to show every pipe, wire, conduit, fitting, and appurtenance. Such components required to complete the Project in accordance with best trade practices and code requirements, shall nonetheless be included in the Contract work and shall not be deemed extra work.

The organization and divisions of work that are set forth within the Contract shall not

determine the appropriate divisions of work or responsibility among the Contractor and individual subcontractors, unless the Contract dictates otherwise.

1.20-1.04.02—Facilities Construction - Increased or Decreased Quantities of Minor Items, and Elimination of Minor Items: An increase or decrease in the quantity of a Contract item shall be deemed to have occurred for the purposes of these specifications when the total pay quantity of that item (i.e., the total number of units of that item for which payment is due to the Contractor as of the time when the work under that item has been completed) is either more or less than the estimated quantity of that item which was given in the bid proposal form or in the Contract as bid upon (referred to below in this section as the “estimated quantity” of the given item). This article shall apply only to minor Contract items, and not to major items in the original Contract. Any quantity increase or decrease from an estimated quantity, if that increase or decrease results from a significant change in the character of the work as defined in Article 1.20-1.04.03(4)(a), shall be treated in accordance with the provisions of Article 1.20-1.04.03, and shall not be governed by or treated in accordance with the provisions of this article. Any such increase or decrease that occurs as the result of a differing site condition as defined in Article 1.20-1.04.04 shall be treated in accordance with the provisions of this article only to the extent that those provisions do not directly conflict with Article 1.20-1.04.04. If the total pay quantity of any minor item varies from the estimated quantity by 25% or less, payment for that item will be made at the original Contract unit price therefor, unless said price is eligible for adjustment under Article 1.20-1.04.03. If the total pay quantity of any minor item varies from the estimated quantity by more than 25%, the compensation payable to the Contractor for that item will be determined in accordance with the provisions of this article. If, however, the Engineer and Contractor have executed a construction order specifying the payment to be made for the item, then payment will be made in accordance with the terms of said order. As an alternative to any and all bases for payment described in this article, the Department may, in any circumstance described in this article, make any price or payment adjustment agreed upon in writing by the Department and the Contractor.

(a) Increases of More Than 25 Percent: If the total pay quantity of a minor item exceeds the estimated quantity by more than 25%, the quantity of work in excess of 125% of the estimated quantity shall be paid for (i) by adjusting the Contract unit price for the quantity exceeding 125% (and only for that "excess" quantity) in the manner described in this Article; (ii) at the option of the Engineer, on a cost-plus basis as provided in Article 1.20-1.09.04; or (iii) on any basis agreed upon in writing by the Engineer and the Contractor.

If the Engineer does not elect to pay for said excess units on a cost-plus basis or according to such a written agreement, the price or payment adjustment shall be made according to the following principles: The increase or decrease in the unit price for the excess units of the subject item shall be the difference between the original Contract unit price and the actual unit cost, said difference to be calculated in the manner described hereafter, as of the time when work under the item was completed. If the costs of work under such item include fixed costs, all such fixed costs shall be deemed to have been recovered by the Contractor as part of the payments made by the

Department for the first 125% of the estimated quantity. Such fixed costs shall therefore be excluded from any computation used to adjust the price or payment for the excess units of the given item. Subject to the above provisions, the actual unit cost of the item to be adjusted shall be determined by the Engineer in the same way that it would be determined if the work were to be paid for on a cost-plus basis as provided in Article 1.20-1.09.04.

If, however, the aggregate payment for the excess number of units, if they were paid for at the original, unadjusted Contract price, would be less than $25,000, the Engineer shall not adjust the Contract unit price.

(b) Decreases of More Than 25%: If the total pay quantity of any minor item is less than 75% of the estimated quantity, the original Contract unit price for the item will not be adjusted unless the Contractor gives a written request for such an adjustment to the Engineer. If the Contractor so requests, the quantity of said item performed or provided shall be paid for by (i) adjusting the Contract unit price as hereinafter provided; (ii) at the option of the Engineer, on a cost-plus basis as provided in Article 1.20-1.09.04, except that in this kind of instance, the Contractor's fixed cost shall be included in the calculation; or (iii) on any basis agreed upon in writing by the Engineer and the Contractor.

The unit price paid for the decreased number of units shall not, in any case, be less than the unit price in the original Contract. On the other hand, the aggregate payment for a decreased total pay quantity of a minor item may not exceed the aggregate payment which would be made for the performance of 75% of the estimated quantity at the original Contract unit price for that item.

If the Engineer does not elect to pay for the decreased quantity of units on a cost-plus basis or on a basis established by written agreement, the price or payment adjustment shall be made according to the following principles:

The amount of the adjustment of the original Contract unit price shall be the difference between that unit price and the actual unit cost (including fixed costs), to be calculated as of the time all work under the item has been completed. The Engineer shall determine such actual unit costs in the same way that they would be determined if payment were to be made on a cost-plus basis under Article 1.20-1.09.04.

(c) Eliminated Items: If an item is entirely eliminated from the Contract, the Department will pay the Contractor only for costs which it incurred in connection with the eliminated item prior to the date upon which the Engineer provided the Contractor with written notice of said elimination. If the Contractor had ordered Project materials (that conformed to all pertinent Contract requirements) prior to the aforesaid date of notification, and if the orders for said materials could not have been canceled within 2 business days after the date of notification, the Department shall pay the Contractor for said materials at their actual cost to the Contractor. In such a case, the materials shall become property of the State and the actual cost of any further handling necessary to deliver them to the Department shall be assumed by the State. If the materials are returnable to their vendor and if the Engineer so directs, the Contractor shall return the materials to the vendor and the State shall reimburse the Contractor (i) for any reasonable charges made to the Contractor by the vendor for the return of the

materials, and (ii) for the actual costs to the Contractor of its handling the materials in returning them to the vendor. Such charges or actual costs to be paid by the Department shall be computed as though the work was being paid for on a cost-plus basis under Articles 1.20-1.04.02(b)(ii) and 1.20-1.09.04.

1.20-1.04.03—Facilities Construction - Changes in Quantities and Significant Changes in the Character of Work:

(1) The Engineer reserves the right to make, in writing, at any time during the work, such changes in quantities and such alterations in the work as are necessary to satisfactorily complete the project. Such changes in quantities and alterations shall not invalidate the contract nor release the surety, and the Contractor agrees to perform the work as altered.

(2) If the alterations or changes in quantities significantly change the character of the work under the contract, whether or not changed by any such different quantities or alterations, an adjustment, excluding loss of anticipated profits, will be made to the contract. The basis for the adjustment shall be agreed upon prior to the performance of work. If a basis cannot be agreed upon, then an adjustment will be made either for or against the Contractor in such amount as the Engineer may determine to be fair and equitable.

(3) If the alterations or changes in quantities do not significantly change the character of the work to be performed under the contract, the altered work will be paid for as provided elsewhere in the contract.

(4) The term "significant change" shall be construed to apply only to the following circumstances:

(a) When the character of the work as altered differs materially in kind or nature from that involved or included in the original proposed construction or

(b) When a major item of work, as defined elsewhere in the Contract, is increased in excess of 125% or decreased below 75% of the original Contract quantity. Any allowance for an increase in quantity shall apply only to that portion in excess of 125% of original contract item quantity, or in case of a decrease below 75%, to the actual amount of work performed

1.20-1.04.04—Facilities Construction - Differing Site Conditions:

(1) During the progress of the work, if subsurface or latent physical conditions are encountered at the site differing materially from those indicated in the Contract or if unknown physical conditions of an unusual nature, differing materially from those ordinarily encountered and generally recognized as inherent in the work provided for in the Contract, are encountered at the site, the party discovering such conditions shall promptly notify the other party in writing of the specific differing conditions before they are disturbed and before the affected work is performed.

(2) Upon written notification, the Engineer will investigate the conditions, and if he/she determines that the conditions materially differ and cause an increase or decrease in the cost or time required for the performance of any work under the Contract, an adjustment, excluding loss of anticipated profits, will be made and the Contract modified in writing accordingly. The Engineer will notify the

Contractor of his/her determination whether or not an adjustment of the Contract is warranted.

(3) No Contract adjustment that results in a benefit to the Contractor will be allowed unless the Contractor has provided the required written notice.

(4) No Contract adjustment will be allowed under this clause for any effects caused on unchanged work.

1.20.1.04.05—Facilities Construction - Extra Work: Unforeseen work made necessary by the Engineer's changes of the Contract plans or specifications, or work that is necessary for completion of the Project, but for which no price is provided in the Contract, shall be done in accordance with the requirements of the specifications and as directed by the Engineer. The Engineer shall notify the Contractor of the necessity for such extra work, stipulating its character and extent, and shall notify the Contractor as to whether the Engineer wants the Contractor to propose a unit price or, instead, a lump sum, for the extra work. Within 5 days of receipt of such notification, the Contractor shall advise the Engineer, in writing, of the compensation (as a unit price or lump sum, whichever has been requested by the Engineer) that the Contractor requests as compensation for the required extra work. The Contractor's request shall be itemized and reasonably detailed, and shall include all known or anticipated direct and indirect costs of the work, including but not limited to, the costs of all safety and other equipment, small tools, labor, subcontractor quotes, consumables, field office overhead, home office overhead, insurance, bonding, and profit. The character and extent of the extra work, together with the basis of compensation, shall be communicated to the Contractor by means of a construction order which, when signed by the Engineer, shall become a part of the Contract. If a Contractor objects to any portion of a construction order submitted to it by the Engineer for signing, and if the Contractor is not willing to sign that order or some portion of that order, the Contractor must, within 15 days of its receipt of said order, return the order with a letter to the Department's Assistant District Engineer administering the Contract, describing specifically what portions of the order the Contractor finds objectionable, the nature of its objections, and the bases for its objections. If the Contractor does not do so, it shall be deemed to have accepted the terms of the construction order. If the Engineer changes the scope of Contract work, the Contractor shall submit a proposed revised schedule and a cost revision proposal, which takes all such changes into account, if the Contractor believes that such revisions are warranted. If the schedule is to be revised, it will be revised in accordance with Article 1.20-1.08.08.

1.20-1.04.06—Facilities Construction - Removal and Disposal of Structures on the Work Site: All structures on the Project site which are not to remain on the Project site after completion of the Project shall be removed from said site and disposed of by the Contractor once it is no longer needed for the Project, and any such structure shall then become the property of the Contractor, except as otherwise required or provided by Article 1.20-1.10.07.

1.20-1.04.07—Facilities Construction - Rights in and Use of Materials Found on the Work Site: Upon written request of the Contractor and with the written approval of the Engineer, subject to limitations which may be set forth within such approval, any stone, gravel, sand, topsoil or any material from existing bridge substructures, buildings, or other structures, found within the limits of the Project may be excavated or removed and used by the Contractor on the Project, provided that said materials meet the requirements of the specification for such materials. Any materials excavated or removed shall not be taken off the Project site unless the Engineer in writing specifically authorizes such action. The following conditions shall govern these matters:

1. Excavation or removal of materials that would necessarily be excavated or removed in making the improvement will be paid for at the applicable Contract unit prices; and, in addition, the item for which this material is used will also be paid for at its Contract unit price. The Contractor will not be charged for such materials. The Contractor shall, without compensation, place in the embankment or elsewhere, as appropriate, sufficient suitable material to fill the space that the excavated materials would have occupied, unless otherwise directed by the Engineer.
2. The excavation or removal of materials that are not required to be excavated or removed in connection with the Contract work will not be paid for; and the Contractor will be charged for such materials at a negotiated unit price. The item for which this material is used will be paid for at its Contract unit price. The Contractor shall, without compensation, backfill with accepted material the space that the excavated materials had occupied, to the satisfaction of the Engineer, unless otherwise directed by the Engineer.

Surplus material shall be removed from the Project only with the Engineer's written permission. The Engineer may determine that such material is not surplus, and may order that it be incorporated into the Project.

SECTION 1.20-1.05
CONTROL OF THE WORK FOR FACILITIES CONSTRUCTION

1.20-1.05.01—Facilities Construction - Authority of Engineer
1.20-1.05.02—Facilities Construction - Contractor Submittals
1.20-1.05.03—Facilities Construction - Conformity with Plans and Specifications
1.20-1.05.04—Facilities Construction - Coordination of Special Provisions, Plans, Supplemental Specifications and Standard Specifications and Other Contract Requirements
1.20-1.05.05—Facilities Construction - Cooperation by Contractor
1.20-1.05.06—Facilities Construction - Cooperation with Utilities (Including Railroads)
1.20-1.05.07—Facilities Construction - Coordination with Work by Other Parties
1.20-1.05.08—Facilities Construction - Schedules and Reports
1.20-1.05.09—Facilities Construction - Authority of Inspectors
1.20-1.05.10—Facilities Construction - Inspection
1.20-1.05.11—Facilities Construction - Removal of Defective or Unauthorized Work

1.20-1.05.12—Facilities Construction - Payrolls
1.20-1.05.13—Facilities Construction - Examining and Copying Contractor's Records
1.20-1.05.14—Facilities Construction - Termination Clause
1.20-1.05.15—Facilities Construction - Markings for Underground Facilities
1.20-1.05.16—Facilities Construction - Dimensions and Measurements
1.20-1.05.17—Facilities Construction - Welding
1.20-1.05.23—Facilities Construction - Requests for Information (RFIs) and Requests for Change (RFCs)
1.20-1.05.24—Facilities Construction - Project Meetings

1.20-1.05.01—Facilities Construction - Authority of Engineer: All work shall be subject to the review of the Engineer. He shall decide all questions as to interpretation of the plans and specifications, and questions of mutual or respective rights of the Contractor and other Department contractors. The Engineer shall decide on an acceptable rate of progress, on the manner of performance, and on what shall be deemed acceptable fulfillment of the Contract. The Engineer shall have the right to determine the points at which the Contractor may begin work and the order in which the work shall be prosecuted in the best interests of the State within the intent of the terms in the Contract.

If a Project-related dispute arises between the Contractor and Department personnel assigned to the Project, and if those parties prove unable to resolve it, the Contractor may submit a detailed written description of the dispute to the Department's Assistant District Engineer administering the Contract.

It must be understood, though, that at no time may the Contractor, because of its disagreement with the Engineer, either disregard the orders of the Engineer or halt Project construction. If the Contractor cannot resolve a Project work or pricing dispute with the Engineer, the Contractor's proper remedy is a claim under CGS Section 4-61. A Contractor that disregards the orders of the Engineer with regard to the prosecution of Project work, or who refuses to continue Project work because of a disagreement with the Engineer, may be subject to termination of its Contract, to a subsequent finding that it is non-responsible as an apparent low bidder for a Department contract, to the assessment of liquidated damages, and to other adverse legal or administrative action by the Department.

1.20-1.05.02—Facilities Construction -Contractor Submittals:

1. **General:** Vacant
2. **Submittal Preparation and Processing:** Vacant
3. **Transmittal of Submittals**: Vacant
4. **Submittal Schedule:** At the Pre-Construction Meeting, the Contractor shall submit the initial submittal schedule. The initial submittal schedule will include all submittals required during the first 60 calendar days of construction, all submittals required to maintain orderly progress of the Work, and all submittal required early because of long lead time for manufacture or fabrication.

Following the Engineer's response to the initial submittal, the Contractor shall provide

copies of the schedule to the Engineer, Designer, the Contractor's subcontractors, and other parties required to comply with submittal dates indicated.

The Contractor shall submit the complete submittal schedule within 60 calendar days of the Notice to Proceed.

The Contractor shall update its submittal schedule once a month and distribute and post each updated schedule in the manner described above.

The submittal schedule shall be organized in numerical order by special provision number and by CSI-formatted specification section number. The Contractor shall include (1) time required for review, ordering, manufacturing, fabrication, and delivery when establishing dates; and (2) additional time required for making corrections or revisions to submittals noted by Designer or Engineer and additional time for handling and reviewing submittals required by those corrections. The Contractor shall coordinate submittal schedule with its subcontracts, the schedule of values, and their construction schedule.

5. Working Drawings (Delegated Design Submittals): When required by the Contract, or when ordered to do so by the Engineer, the Contractor shall prepare and submit working drawings, signed, sealed and dated by a qualified Professional Engineer licensed to practice in the State of Connecticut, for review.

There will be no direct payment for furnishing any working drawings, procedures or supporting calculations, but the cost thereof shall be considered as included in the general cost of the work.

a. Working Drawings for Permanent Construction: The Contractor shall submit drawings to the Designer on 22 in x 34 in sheets with a border and title block similar to the Department standard. Each drawing shall be a separate PDF file. Drawings shall be searchable. The first drawing shall include the Contractor's designer's Professional Engineer's digital signature, meeting the requirements of Adobe's Certified Document Services (CDS), and all other drawings shall include a watermark of the Professional Engineer's stamp in a common area of the border. Calculations, procedures and other supporting data may be submitted in an 8-1/2 in x 11 in format and shall be in a single PDF file. The first sheet of calculations shall include the Contractor's designer's Professional Engineer's digital signature, meeting the CDS requirements, Documents shall be named "Drawings," "Calculations," or "Supporting Documentation" as applicable.

The Contractor's designer, who prepares the working drawings, shall secure and maintain at no direct cost to the State a Professional Liability Insurance Policy for errors and omissions in the minimum amount of $2,000,000 per error or omission. The Contractor's designer may elect to obtain a policy containing a maximum $250,000 deductible clause, but if the Contractor's designer should obtain a policy containing such a clause, they shall be liable to the extent of at least the deductible amount. The Contractor's designer shall obtain the appropriate and proper endorsement of its Professional Liability Policy to cover the indemnification clause in this Contract, as the same relates to negligent acts, errors or omissions in the Project work performed by them. The Contractor's designer shall continue this liability insurance coverage for a period of (1) 3 years from the date of acceptance of the work by the Engineer, as evidenced by a State of Connecticut, Department of Transportation Form Number CON-

500, entitled "Certificate of Acceptance of Work," issued to the Contractor; or (2) 3 years after the termination of the Contract, whichever is earlier, subject to the continued commercial availability of such insurance. The Contractor shall supply to the Assistant District Engineer a certificate of insurance in accordance with Article 1.20-1.03.07 at the time that the working drawings for the Project are submitted.

b. Working Drawings for Temporary Construction: The Contractor shall submit drawings, calculations, procedures and other supporting data to the Assistant District Engineer in a format acceptable to the Assistant District Engineer.

c. Working Drawings for Permanent Construction: Drawings shall be submitted to the Designer on 22 in x 34 in sheets with a border and title block similar to the Department standard. Each drawing shall be a separate PDF file. Drawings shall be searchable. The first drawing shall include the Contractor's designer's Professional Engineer's digital signature, meeting the requirements of Adobe's Certified Document Services (CDS), and all other drawings shall include a watermark of the Professional Engineer's stamp in a common area of the border. Calculations, procedures and other supporting data may be submitted in an 8-1/2 in x 11 in format and shall be in a single PDF file. The first sheet of calculations shall include the Contractor's designer's Professional Engineer's digital signature, meeting the CDS requirements, Documents shall be named "Drawings," "Calculations," or "Supporting Documentation" as applicable.

6. Shop Drawings: When required by the Contract, or when ordered to do so by the Engineer, the Contractor shall prepare and submit shop drawings for review. Drawings shall be submitted on 22 in x 34 in sheets with an appropriate border and with a title block in the lower right-hand corner of each sheet. Each drawing shall be a separate PDF file. Drawings shall be searchable.

Shop Drawings consist of fabrication and installation drawings, roughing-in and setting drawings, schedules, patterns, templates and similar drawings, and wiring diagrams showing field-installed wiring, including power, signal, and control wiring. Standard information prepared without specific reference to the Project shall not be considered to be a Shop Drawing. Shop Drawings shall be project specific.

Shop drawings shall include the following information: Contract number, Project description, number and title of the drawing, date of drawing, revision number, name of Contractor and subcontractor submitting drawings, dimensions, identification of products, shop work manufacturing instructions, design calculations, statement of compliance with Contractual standards, notation of dimensions established by field measurement, notation of coordination requirements, relationship to adjoining construction clearly indicated, seal and signature of a professional engineer if specified, and any other information required by individual Contract provisions.

There will be no direct payment for furnishing any shop drawings, procedures or supporting calculations, but the cost thereof shall be considered as included in the general cost of the work.

7. Coordination Drawings: When required by the Contract, or when ordered to do so by the Engineer, the Contractor shall prepare and submit coordination drawings for review. Each drawing shall be a separate PDF file. Drawings shall be searchable.

The Contractor shall prepare coordination drawings according to requirements in other

Contract provisions, and additionally where installation is not completely shown on Shop Drawings, where limited space availability necessitates coordination, or if coordination is required to facilitate integration of products and materials fabricated or installed by more than one entity.

Coordination Drawings shall include Project-specific information drawn accurately to a scale large enough to indicate and resolve conflicts. Coordination Drawings shall not be based on standard printed data. Coordination Drawings shall include the following information, as applicable: (1) use applicable plans as a basis for preparation of Coordination Drawings and prepare sections, elevations, and details as needed to describe relationship of various systems and components; (2) coordinate the addition of trade-specific information to the coordination drawings by multiple contractors in a sequence that best provides for coordination of the information and resolution of conflicts between installed components before submitting for review; (3) indicate functional and spatial relationships of components of architectural, structural, civil, mechanical, and electrical systems; (4) indicate space requirements for routine maintenance and for anticipated replacement of components during the life of the installation; (5) show location and size of access doors required for access to concealed dampers, valves, and other controls; (6) indicate required installation sequences; (7) indicate dimensions shown on the plans, specifically noting dimensions that appear to be in conflict with submitted equipment and minimum clearance requirements, and (8) provide alternate sketches to the Designer indicating proposed resolution of such conflicts.

There will be no direct payment for furnishing any coordination drawings, but the cost thereof shall be considered as included in the general cost of the work.

8. Product Data: When required by the Contract, or when ordered to do so by the Engineer, the Contractor shall prepare and submit product data for review in a PDF file.

The Contractor shall provide all product data in a single submittal for each element of construction or system and shall mark each submittal with the Contract item number.

The Contractor shall mark each copy of a product data submittal to show applicable choices and options. Where product data includes information on several products that are not required, copies shall be marked to indicate the applicable information. Product data shall include the following information and confirmations to the extent applicable: manufacturer's printed recommendations, compliance with recognized trade association standards, compliance with recognized testing agency standards, application of testing agency labels and seals, notation of coordination requirements, and any other information required by the individual Contract provisions.

There will be no direct payment for furnishing any product data, but the cost thereof shall be considered as included in the general cost of the work.

9. Product Samples: When required by the Contract, or when ordered to do so by the Engineer, the Contractor shall prepare and submit product samples for review.

Product Samples are samples submitted for review and action by the Designer, which are: (1) physically identical to the proposed product or material cured and finished as required by the Contract; or (2) submitted for review of kind, color, pattern, thickness, and texture. Samples shall be used for a final check of these characteristics with other

elements, and for a comparison of the characteristics of the approved sample with those of the actual component as delivered and installed.

The following information shall be submitted with product samples to the extent applicable: Contract number; Project description; generic description of the sample (name or trade reference, type or quality or grade, and any further designation necessary to identify the items or materials); sample source; product name; manufacturer's name; confirmation of availability; and anticipated delivery time.

In conjunction with the submission of physical product samples, a digital photograph of the sample shall be uploaded into ProjectWise.

The Designer will retain one set of the samples, transmit one set of same to the Engineer, and transmit any remaining sets of samples to the Contractor. The Engineer will retain the samples at the Project site for quality comparisons throughout the duration of the Project.

There will be no direct payment for furnishing any product samples, but the cost thereof shall be considered as included in the general cost of the work.

10. Quality Assurance Submittals: When required by the Contract, or when ordered to do so by the Engineer, the Contractor shall prepare and submit quality assurance submittals for review in a PDF file.

Quality assurance submittals consist of qualification data, design data, certifications, manufacturer's instructions, manufacturer's field reports, test reports, Material Safety Data Sheets (MSDSs), and other quality assurance information required by individual Contract provisions.

Where Contract provisions require certification that a product, material, or installation complies with specified requirements, the Contractor shall submit a notarized certification from the manufacturer certifying said compliance. An officer of the manufacturer or other individual authorized to sign documents on behalf of the company shall sign the certification.

Where Contract provisions require the Contractor shall provide a certification letter on the manufacturer's letterhead to certify that asbestos is not contained in the materials. The manufacturer certification letter shall be formatted in the following manner:

[Addressed to:]	Commissioner of Transportation Department of Transportation P.O. Box 317546 Newington, Connecticut 06131-7546

Project Title and Number

[We] hereby certify that all materials manufactured by [Insert Manufacturer Name] are asbestos-free.

[Signature:]	[Name of authorized signatory] [Title]

Submittals associated with these materials will not be reviewed without the required

manufacturer certification letter.

There will be no direct payment for furnishing any quality assurance submittals, but the cost thereof shall be considered as included in the general cost of the work.

11. Submittal Reviewer's Action: The Designer or Engineer will review each submittal, mark each with a uniform, self-explanatory action stamp, and return the stamped submittal promptly to the Contractor. The stamp will be marked as follows to indicate the action taken:

(a) If submittals are marked "No Exceptions Noted," the Designer or Engineer has not observed any statement or feature that appears to deviate from the Contract requirements. This disposition is contingent on being able to execute the manufacturer's written warranty in compliance with the Contract provisions.

(b) If submittals are marked "Exceptions as Noted," the considerations or changes noted by the Designer or Engineer are necessary in order for the submittal to comply with Contract requirements. This disposition is contingent on being able to execute the manufacturer's written warranty in compliance with the Contract provisions.

(c) If submittals are marked "Revise and Resubmit," the Contractor shall revise and resubmit the submittal to address the deficiencies or provide additional information requested by the Designer or Engineer

(d) If submittals are marked "Rejected," the Contractor shall prepare and submit a new submittal in accordance with the Designer's notations.

(e) If submittals are primarily for information or record purposes, the Designer will return the submittal marked "No Action Required." This disposition is contingent on being able to execute the manufacturer's written warranty in compliance with the Contract provisions.

Upon completion of the review, the submittal reviewer will notify the Contractor by e-mail that the submittal dispositions are available in ProjectWise.

The Contractor shall not proceed with the part of the Project covered by the submittal until the submittal is marked "No Exceptions Noted" or "Exceptions as Noted" by the Designer or the Engineer. The Contractor shall retain sole responsibility for compliance with all Contract requirements.

The Contractor shall print 2 copies through ProjectWise of each submittal marked "No Exceptions Noted" or "Exceptions as Noted" to the Assistant District Engineer for use by the Engineer within 7 calendar days of the Contractor's receipt of the submittal reviewer's e-mail. The Contractor shall not perform physical work related to the submittal until the 2 copies are provided to the Assistant District Engineer.

The Contractor shall mark up one set of shop drawings and one set of working drawings and retain them as a "Record Document."

Maintenance manuals and warranties will not be returned unless they are Rejected.

1.20-1.05.03—Facilities Construction - Conformity with Plans and Specifications: All work performed and all materials furnished by the Contractor must be, in the opinion of the Engineer, in conformity with the lines, grades, cross-sections, dimensions and material requirements, including tolerances, shown on the plans or indicated in the Contract specifications.

The minimum quantity or quality level to be provided or performed is shown or

specified in the Contract. The actual installation may comply exactly with the minimum quantity or quality specified or it may exceed the minimum within reasonable limits. Indicated numeric values are minimum or maximum, as appropriate for the context of the requirements. The Contractor shall refer uncertainties to the Engineer for a decision before proceeding.

If the Engineer believes that the materials or the finished product in which the materials were used are not in conformity with the plans and specifications, but believes nonetheless that the finished product is acceptable, he will then determine whether or not the work will be accepted and remain in place. If the Engineer believes that the work should be accepted, he will issue a construction order confirming his determination, and may provide therein for any equitable adjustment in the basis of payment which he deems appropriate.

If, in the opinion of the Engineer, any material provided by the Contractor, any finished product in which the materials were used, or any work performed does not conform to the plans and specifications and has resulted in an unacceptable product, the Contractor shall, at its own expense, either cure or remove and replace the unaccepted work and material, as the Engineer directs.

1.20-1.05.04—Facilities Construction - Coordination of Special Provisions, Plans, Supplemental Specifications and Standard Specifications and Other Contract Requirements: All requirements indicated on the plans or in the Standard Specifications, the Supplemental Specifications, Special Provisions or other Contract provisions shall be equally binding on the Contractor, unless there is a conflict between or among any of those requirements. In the case of such a conflict, the order of governance among those requirements, in order of descending authority, shall be as follows:

1. Environmental Permits
2. Environmental Permit Applications
3. Special Provisions
4. Plans other than Standard Sheets (enlarged details on plans, used to clarify construction, shall take precedence over smaller details of the same area; and information contained in schedules or tables, titled as such, shall take precedence over other data on plans)
5. Standard Sheets
6. Supplemental Specifications
7. Standard Specifications and other Contract requirements

Numerical designations of dimensions shall take precedence over dimensions calculated by applying a scale to graphic representations. Neither party to the Contract may take advantage of any obvious error or omission in the Contract. Should either party to the Contract discover such an error or omission, that party shall notify the other party of same immediately in writing. The Engineer will make such corrections and interpretations of the Contract as are necessary, in his judgment, to fulfill the purposes of the Contract that are evident from examining the Contract as a whole.

If the Contract includes an item that does not have a corresponding specification for either performance or payment purposes, the Contractor shall notify the Engineer of that

fact in writing at least 2 weeks prior to ordering materials for or commencing work on the item. If the Department's documents do not contain such a specification, the Engineer shall, if possible, derive an appropriate specification from applicable AASHTO Specifications or, if necessary, ASTM Specifications. If neither of those sources provides a suitable specification, the Contractor shall seek guidance from the Engineer with regard to the item, and the Engineer will formulate a reasonable specification for the item. When compliance with 2 or more standards is specified, and the standards may establish different or conflicting requirements for minimum quantities or quality levels, the Contractor shall refer such issues to the Engineer for a decision before proceeding with the pertinent work.

Industry Standards: Each entity engaged in construction of the Contract shall be familiar with industry standards applicable to that entity's construction activities. If printed standards have been established by organizations referenced in Article 1.20-1.01.02 or in the Contract, the Contractor shall obtain copies of said standards directly from the publication source.

Unless the Special Provisions include more stringent requirements, applicable construction industry standards have the same force and effect as if bound or copied directly into the Special Provisions to the extent referenced. Such standards are made a part of the Contract by reference.

The Contractor shall comply with the standard in effect as of the date of the advertisement for solicitation of bids, unless specifically directed otherwise in writing by the Engineer.

All references in the Contract to industry standards or codes refer to the last editions of same that were in effect at the date for the advertisement for solicitation of bids. Such references include current addenda and errata, if any, and shall be considered a part of the Contract.

1.20-1.05.05—Facilities Construction - Cooperation by Contractor: The Contractor will be supplied by the Department with copies of the plans.

The Contractor shall maintain in good order, in a secure, fire-resistant location at the Project site, 2 copies of all plans, Special Provisions (including CSI-formatted specifications within a particular Special Provision), Addenda, submittals, Construction Orders, and other modifications, schedules and instructions. The Contractor shall mark one set of these documents to record all changes made during construction. The other set shall be kept clean of all markings. Both sets shall be available to the Engineer at all times.

Record Drawings: The Contractor shall maintain a complete set of Record Drawings by maintaining a clean, undamaged set of blue or black line prints of Contract drawings, Working Drawings, Shop Drawings, and Coordination Drawings. The Contractor shall mark whichever drawings within the set that are most capable of showing conditions fully and accurately where the actual installation varies substantially from the Project work as originally shown. Where Working Drawings, Shop Drawings, or Coordination Drawings are used, the Contractor shall record a cross-reference at the corresponding location on the Contract plans. The Contractor shall give particular attention to concealed elements that would be difficult to measure and record at a later date. The

Contractor shall (1) mark record sets with red erasable pencil, (2) use other colors to distinguish between variations in separate categories of the Project work, (3) mark new information that was not shown on Contract plans, Working Drawings, Shop Drawings, or Coordination Drawings, (4) note related Addenda and construction order dates where applicable.

Record Specifications: The Contractor shall maintain one complete copy of the Record Specifications, including related Addenda, construction orders and modifications issued in printed form during construction. The Contractor shall (1) mark these documents to show substantial variations in actual Project work performed in comparison with the text of the Specifications and modifications, (2) take care to show clearly on these documents any selected options and information on concealed construction that would be difficult to view at a later date, (3) note related record drawing information and Product Data.

Record Reports: The Contractor shall maintain one binder of all miscellaneous records such as manufacturer startup reports, test reports, and Building and Fire Code inspection reports required by other Contract Provisions (including CSI-formatted Specifications within a particular Special Provision). The miscellaneous records shall be arranged systematically according to the organization of the Contract provisions.

No Asbestos Certification: The Contractor shall complete and sign a certification letter assuring the Department that no asbestos-containing materials have been used in the construction of the Contract. The Department will not issue the Certificate of Compliance without this completed and signed certification form. The Contractor certification letter shall be formatted in the following manner:

CONTRACTOR CERTIFICATION:
RE/ASBESTOS CONTENT OF MATERIALS

State of Connecticut
Department of Transportation
PO Box 317546
Newington, CT 06131-7546

1. Project Number: _____
2. Project Name: _____
3. Contractor Name: _____
4. This is to certify that I fully understand that it is the requirement of the Connecticut Department of Transportation that only materials that do not contain asbestos of any kind or amount are to be utilized in the construction of this Project.

   I therefore certify that, to the best of my knowledge, all materials installed under this Contract are asbestos-free.

   For the one-year warranty period after the issuance of the Certificate of Compliance, I agree to remove any asbestos-containing material identified by the

Connecticut Department of Transportation and reinstall an approved, non-asbestos-containing material that is in compliance with the original Contract at no additional cost to the State.

5. Date of Certificate of Compliance: _____
6. Date of the Asbestos Certification: _____
7. Signature of Authorized Party Agreeing to the Terms & Conditions Identified Herein & as Further Stated in the Contract:

_____	_____
Signature	Title
_____	_____
Printed Name	Date

The Contractor shall give the Project constant attention to facilitate the progress thereof, shall cooperate with the Department, and shall promptly comply with all orders and directions of the Engineer.

Project Superintendent: The Contractor shall be represented on Site by a Project Superintendent. The Project Superintendent shall be on the Project Site whenever Project work is being performed. The Project Superintendent shall (1) attend all meetings between the Contractor and the Department, the Contractor and its subcontractors, and any other meetings that affect the progress of the Project; (2) be knowledgeable of the status of all parts of the work throughout the duration of the Project; (3) coordinate the activities of the subcontractors; (4) maintain the construction schedule; (5) be the Contractor's quality assurance/quality control representative; (6) prepare Daily Construction Reports in accordance with Article 1.20-1.05.08; (7) prepare or approve the Biweekly Schedules required to be submitted by the Contractor in Article 1.20-1.05.08; (8) have full authority to promptly execute and carry out the orders and directions of the Engineer within the terms of the Contract; and (9) to supply such materials, equipment, tools, labor and incidentals as may be required by the Contract or by the Engineer.

The Project Superintendent shall be an administrative employee of the Contractor or a Consultant hired by the Contractor to coordinate and expedite all phases of the work on a full-time daily basis, including associated project trades, on the Project Site.

The Contractor shall submit a written resume of the proposed Project Superintendent within 7 calendar days of the award of the Contract for the Department's acceptance. This resume shall demonstrate their superintendent work experience on a minimum of 2 projects of this type, scale, and complexity of this Project.

At any time during the Project, the Department may ask for any reason that the Project Superintendent be replaced. If the Department directs this action, the Contractor shall submit a written resume for a new Project Superintendent with the intent that this individual be in place on the Project within 30 calendar days of their acceptance by the Department. During this time, the duties of the Project Superintendent shall be performed by the Project Coordinator. If there is no Project Coordinator on the Project, the Department may allow the original Project Superintendent to remain until the new

Project Superintendent begins. The original Project Superintendent may still work on the Project in another capacity at the discretion of the Contractor.

Voluntary Partnering: The Department wants to establish a cohesive partnership with the Contractor and its principal subcontractors on the Project, so that the partnership can draw on the strengths of each organization in order to identify and pursue the partners' mutual Project goals. Chief among those will be the effective and efficient completion of the Project, within budget, on schedule, and in accordance with applicable plans, specifications, and other Contract provisions.

If the Contractor believes at any point before or during Project construction that the creation of formal partnering between itself and the Department, with the use of a third-party facilitator, would help the Contractor and the Department ("Partners") to reach these goals, the Contractor may submit a written request to the District Engineer of the District in which the Project will be constructed for the establishment of formal partnering between the Parties. If the Contractor makes such a request, the Department will engage in that partnering.

Any costs incurred by the Partners jointly in connection with Project partnering activities, to the extent that those costs are recognized as legitimate and appropriate by both Partners, will be shared equally between them. Any other costs incurred because of partnering activities will be borne by the Partner that incurred them.

If the Contractor and the Department decide to pursue a formal partnering initiative, they Contractor and The Department will arrange first to meet in order to select a third-party partnering facilitator and to plan a partnering development and team-building workshop. After they agree upon the services to be performed by the facilitator and the range of compensation for the facilitator that would be acceptable to them, the Contractor will contract accordingly for the services of said facilitator. The Department will reimburse the Contractor for fifty percent (50%) of the payments made under that contract, so long as the activities paid for were appropriate and within the contemplation of the Partners.

At the Partners' initial partnering meeting, the Partners will also determine who should attend the first partnering workshop, what the workshop's agenda will be, how long the workshop should last, and when and where it will be held. Unless the Partners agree otherwise, attendance at the first partnering workshop will be mandatory for the Department's District Engineer for the Project and the Department's other key Project personnel, the Contractor's on-Site Project manager and other key supervisory Project personnel, and, if the Contractor agrees to it, the key supervisory personnel of the Contractor's principal Project subcontractors. The Partners will also request that the Project design engineers and key local government personnel send Regional/District and Corporate/State-level managers to the workshop and direct them to participate in Project partnering activities as and when requested to do so by the Partners.

With the agreement of the Partners, follow-up Project partnering workshops will be held periodically until the Department closes out the Contract.

If the Partners agree on a formal partnering charter for the Project, the establishment of that charter will not change the legal relationship of the Partners to the Contract; it will not alter, supplement, or eliminate any of the Partners' rights or obligations under the Contract.

1.20-1.05.06—Facilities Construction - Cooperation with Utilities (Including Railroads): The Engineer may anticipate that a Project construction activity will require the removal, repair, replacement or relocation of a utility appurtenance. In such an instance, the Engineer, in advance of the commencement of such activity, will notify the affected utilities, either directly or through the local government, of the anticipated nature and timing of said activity. The Engineer will endeavor to have all necessary adjustments of public or private utility fixtures, pipelines, and other appurtenances within or adjacent to the limits of Project construction made as soon as practicable, when such changes are required by the State or local government.

Whenever the Engineer determines that the relocation or adjustment of poles or the overhead plant of public or private utilities or railroad facilities is dependent upon the completion of certain required Contract activities, the Contractor shall complete those activities within a reasonable length of time.

Temporary and permanent changes required by the State or local government in water lines, gas lines, sewer lines, wire lines, service connections, water or gas meter boxes, water or gas valve boxes, light standards, cableways, signals and all other utility (including railroad) appurtenances within the Site of the proposed Project construction are to be made by others at no expense to the Contractor, except as otherwise provided for in the Special Provisions or as noted on the plans.

When the Contractor is required by the Engineer to relocate utility appurtenances, such work will be paid for as extra work unless specific bid items for such work appear in the Contract.

If the Contractor, for its convenience or for any other reason, desires a change in the location of a water line, gas line, sewer line, wire line, service connection, water or gas meter box, valve box, light standard, cableway, signal or any other utility (including railroad) appurtenances, the Contractor shall satisfy the Department that the proposed relocation will not interfere with the Contractor's or other contractors' Project operations or their fulfillment of the requirements of the plans, and that said change will not create an obstruction or hazard to traffic. If the requested change of location is acceptable to the Engineer, the Contractor shall make its own request for such relocation work to the utility companies, pipe owners or other parties likely to be affected by said work. Such relocation work shall be done at the Contractor's sole expense.

The Contractor shall schedule its operations in such a manner as to minimize interference with the operations of the utility companies or local governments in effecting the installation of new facilities, as shown on the plans, or the relocation of their existing facilities. The Contractor shall consider in its bid all permanent and temporary utility appurtenances in their present or relocated positions and any installation of new facilities required for the Project. The Department will not make any additional compensation to the Contractor for delays, inconvenience or damage sustained by the Contractor due to

(i) interference with Project construction caused by the location, condition or operation of utility (including railroad) appurtenances or

(ii) the installation, removal, or relocation of such appurtenances; and the Contractor may not make a claim for any such compensation.

1.20-1.05.07—Facilities Construction - Coordination with Work by Other Parties: The Contractor shall make every effort to perform its work so as not to interfere with other work for the State or other parties. In the case of a dispute with another contractor working for the Department regarding their work for the State, or in the case of a conflict between their planned operations or the needs of their projects, the Contractor shall bring that dispute or conflict to the Engineer's attention and the Engineer shall decide how it shall be resolved. The Engineer's decision shall be binding upon all of the contractors working for the Department who are involved in the matter.

The Contractor shall, as far as possible, schedule and otherwise plan and arrange its work, and place and dispose of its Project materials, so as not to interfere with the operations of other contractors working for the State. The Contractor shall, as necessary to accomplish this goal, endeavor to coordinate and schedule its work in the way which will interfere least with the work of other parties.

If the Contractor's work or activities under the Contract come into conflict with other activities or work for the State, any financial or other liability arising from such conflicts shall be the Contractor's; and the Contractor shall protect and save harmless the State from any and all damages or claims, and the costs of defending same, which may arise because of inconvenience, delay, financial hardship, or injuries caused to the Contractor or to other contractors as a result of such conflicts, unless:

(a) The Contractor notifies the Engineer of such conflicts as soon as the likelihood of such a conflict becomes apparent; or, if such likelihood could not have been foreseen earlier, then as soon as the conflict becomes apparent.

(b) The Contractor waits for direction from the Engineer as to how the conflict should be avoided or resolved, and the Contractor does not proceed with the work involved in the conflict until the Engineer has provided the Contractor with such direction.

(c) The Contractor follows the directions given by the Engineer for avoiding, resolving, or minimizing the conflict.

The Contractor shall be responsible for the completion of its Contract work, regardless of any interference with, or delay of, that work which may be caused by the presence or activities of other contractors working for the State.

The Engineer and the Owner will occupy the Project Site during the entire construction period. The Engineer and the Owner reserve the right to install equipment prior to Semi-Final Inspection and the issuance of the Certificate of Compliance provided that such installation does not interfere with the Contractor’s completion of their Work. The Owner and any PURA regulated utility installers reserve the right to perform work in the Communications Room, including the Owner changing locks on the doors, on or about the time the above-ceiling inspection is performed by the Engineer. Such installations shall not constitute acceptance of the total Project.

1.20-1.05.08—Facilities Construction - Schedules and Reports: When a project coordinator is not required by the Contract the following shall apply:

Baseline Bar Chart Construction Schedule: Within 20 calendar days after contract award the Contractor shall develop a comprehensive bar chart as a baseline schedule for the project. The bar chart schedule shall be submitted to the Engineer for approval and shall be based on the following guidelines:

1. The bar chart schedule shall contain a list of activities that represents the major activities of the project. At a minimum, this list should include a breakdown by individual structure or stage, including major components of each. The bar chart schedule shall contain sufficient detail to describe the progression of the work in a comprehensive manner. As a guide, 10 to 15 bar chart activities should be provided for each $1 million of contract value.

The following list is provided as an example only and is not meant to be all-inclusive or all-applicable:

General Activities Applicable to all projects

Project Constraints

- -Winter shutdowns
- -Environmental permits/application time of year restrictions
- -Milestones
- -Third Party approvals
- -Long lead time items (procurement and fabrication of major elements)
- -Adjacent Projects or work by others

Award
Notice to Proceed
Signing (Construction, temporary, permanent by location)
Mobilization
Permits as required
Field Office
Utility Relocations
Submittals/shop drawings/working drawings/product data
Construction of Waste Stock pile area
Clearing and Grubbing
Earthwork (Borrow, earth ex, rock ex etc.)
Traffic control items (including illumination and signalization)
Pavement markings
Roadway Construction (Breakdown into components)
Drainage (Breakdown into components)
Culverts
Plantings (including turf establishment)
Semi-final inspection
Final Cleanup

As required the following may supplement the activities listed above for the specific project types indicated:

a. For bridges and other structures, include major components such as abutments, wingwalls, piers, decks and retaining walls; further breakdown by footings, wall sections, parapets etc.

Temporary Earth Retention Systems
Cofferdam and Dewatering

Structure Excavation
Piles/test piles
Temporary Structures
Removal of Superstructure
Bearing Pads
Structural Steel (Breakdown by fabrication, delivery, installation, painting etc.)
Bridge Deck

b. Multiple location projects such as traffic signal, incident management, lighting, planting and guiderail projects will be broken down first by location and then by operation. Other major activities of these types of projects should include, but are not limited to:

Installation of anchors
Driving posts
Foundations
Trenching and Backfilling
Installation of Span poles/mast arms
Installation of luminaries
Installation of cameras
Installation of VMS
Hanging signal heads
Sawcut loops
Energizing equipment

c. Facility Projects – Facilities construction shall reflect the same breakdown of the project as the schedule of values:

Division 2 – Existing Conditions
Division 3 – Concrete
Division 4 – Masonry
Division 5 – Metals
Division 6 – Wood, Plastic, and Composites
Division 7 – Thermal and Moisture Protection
Division 8 – Openings
Division 9 – Finishes
Division 10 – Specialties
Division 11 – Equipment
Division 12 - Furnishings
Division 13 – Special Construction
Division 14 – Conveying Equipment
Division 21 – Fire Suppression
Division 22 – Plumbing
Division 23 – Heating, Ventilating, and Air Conditioning
Division 26 – Electrical

Division 27 – Communications
Division 28 – Electronic Safety and Security
Division 30 – Site Work
Division 31 – Earthwork
Division 32 – Exterior Improvements
Division 33 - Utilities

2. If the Engineer determines that additional detail is necessary, the Contractor shall provide it.

3. Each activity shall have a separate schedule bar. The schedule timeline shall be broken into weekly time periods with a vertical line to identify the first working day of each week.

4. The bar chart schedule shall show relationships among activities. The critical path for the Project shall be clearly defined on the schedule. The schedule shall show milestones for major elements of work, and shall be prepared on a sheet, or series of sheets of sufficient width to show data for the entire construction period**.**

5. If scheduling software is used to create the bar chart schedule, related reports such as a predecessor and successor report, a sort by total float, and a sort by early start shall also be submitted.

6. Project activities shall be scheduled to demonstrate that the construction completion date for the Project will occur prior to expiration of the Contract time. In addition, the schedule shall demonstrate conformance with any other dates stipulated in the Contract.

7. The Contractor is responsible to inform its subcontractor(s) and supplier(s) of the Project schedule and any relevant updates.

8. There will be no direct payment for furnishing schedules, the cost thereof shall be considered as included in the general cost of the work.

Monthly Updates: No later than the 10th day of each month, unless directed otherwise by the Engineer, the Contractor shall deliver to the Engineer three (3) copies of the schedule to show the work actually accomplished during the preceding month, the actual time spent on each activity, and the estimated time needed to complete any activity which has been started but not completed. Each time bar shall indicate, in 10% increments, the estimated percentage of that activity which remains to be completed. As the Project progresses, the Contractor shall place a contrasting mark in each bar to indicate the actual percentage of the activity that has been completed.

The monthly update shall include revisions of the schedule necessitated by revisions to the Project directed by the Engineer (including, but not limited to extra work), during the month preceding the update. Similarly, any changes of the schedule required due to changes in the Contractor's planning or progress shall also be included. The Engineer reserves the right to reject any such revisions. If the schedule revisions extend the contract completion date, due to extra or added work or delays beyond the control of the Contractor, the Contractor shall submit a request in writing for an extension of time in accordance with Article 1.20-1.08.08. This request shall be supported by an analysis of the schedules submitted previously.

Any schedule revisions shall be identified and explained in a cover letter accompanying the monthly update. The letter shall also describe in general terms the

progress of the Project since the last schedule update and shall identify any items of special interest.

If the Contractor fails to provide monthly schedule updates, the Engineer has the right to hold 10% of the monthly estimated payment, or $5,000, whichever is less, until such time as an update has been provided in accordance with this provision.

Biweekly Schedules: Each week, the Contractor shall submit to the Engineer a two week look-ahead schedule. This short-term schedule may be handwritten but shall clearly indicate all work planned for the following two week period.

Recovery Schedules: If the updated schedule indicates that the Project has fallen behind schedule, the Contractor shall either submit a time extension request in accordance with Article 1.20-1.08.08 or immediately institute steps acceptable to the Engineer to improve its progress of the Project. In such a case, the Contractor shall submit a recovery plan, as may be deemed necessary by the Engineer, to demonstrate the manner in which an acceptable rate of progress will be regained.

Daily Construction Reports: The Project Superintendent shall assist the Engineer in the preparation of a daily construction report, by ensuring that each of the Contractor's employees and subcontractors working on the Project Site on a given day signs the Engineer's sign-in sheet for that day; and by keeping and providing to the Engineer its own daily list of employees and subcontractors who worked on the Project Site on that day.

1.20-1.05.09—Facilities Construction - Authority of Inspectors: Inspectors employed by the Department are authorized to inspect all work done and all materials furnished for Project construction. Such inspection may extend to any part of the Project work, and to the preparation or manufacture of the materials to be used for same. In case of any dispute arising between the Contractor and the inspector as to materials furnished or the manner of performing work, the inspector has the authority to reject material or stop the work until the question at issue can be referred to and decided by the Engineer. The inspector is not authorized to revoke, alter, enlarge, relax, or release any requirements of the Contract nor to approve or accept any portion of the Contract work, nor to issue instructions contrary to the Contract. The inspector shall in no case act as a foreman, or fulfill other duties for the Contractor. Any advice that the inspector may give to the Contractor shall not be construed as binding the Department in any way, nor as releasing the Contractor from its obligation to fulfill the terms of the Contract.

The conducting, failure to conduct, sufficiency, or accuracy of any inspection does not relieve the Contractor of its responsibility to perform the Project work properly, to monitor its work and the work of its subcontractors, and to institute and maintain quality control procedures appropriate for the proper execution of Project work.

1.20-1.05.10—Facilities Construction - Inspection: All materials and each part or detail of the Project work shall be subject at all times to inspection by the Engineer. Such inspection may include mill, plant, shop or other types of inspection; and any material furnished under the Contract is subject to such inspection. The Engineer shall be allowed access to all parts of the work and shall be furnished with such information

and assistance by the Contractor as the Engineer deems necessary to make complete, detailed and timely inspections.

The Contractor shall always notify the Engineer of its intention to perform work on the Project, including the nature of the particular work it intends to perform, at least 3 calendar days before the Contractor commences that work. If, after receiving such notice, the Engineer decides that he needs more than 3 calendar days to arrange for and conduct inspection related to that work, he shall so notify the Contractor, and the Contractor shall refrain from commencing the work until the Engineer has arranged for such inspection. The Contractor may not commence any portion of its work without prior related inspection by the Engineer unless the Engineer agrees otherwise. In the absence of such advance agreement by the Engineer, any work done or material used without inspection by a Department representative may be ordered exposed for examination and testing, and then corrected or restored, all at the Contractor’s expense.

If, at any time before the Department's acceptance of the Project, the Engineer requests the Contractor to remove or uncover any portion of the Project work for inspection by the Engineer, the Contractor shall do so. After such inspection is completed, the Contractor shall restore such portions of the work to the condition required by the Contract as construed by the Engineer. If the work or material exposed and inspected under this provision proves acceptable to the Engineer, the Department shall pay the Contractor for any removal, uncovering or restoration of its previous Contract work. The Department shall pay the Contractor for such removal, uncovering, and restoration of the prior work as extra work. If the work or material exposed and inspected proves, in the opinion of the Engineer, not to conform to Contract requirements, the Contractor shall be responsible for the costs of the removal, uncovering, correction and restoration of the work and material in accordance with the Contract or as the Engineer requires.

For work requiring inspection by a building or fire code official, the Contractor shall provide a minimum 3 calendar days, excluding weekends and State holidays, notice to the Engineer to perform such inspection. The Contractor shall not enclose, cover, or impair any system or component that will require inspecting, testing, or viewing for compliance with the codes defined in Article 1.20-1.02.13.

1.20-1.05.11—Facilities Construction - Removal of Defective or Unauthorized Work: Work that does not conform to the requirements of the Contract shall be remedied in a manner acceptable to the Engineer or removed and replaced at the Contractor's expense in a manner acceptable to the Engineer.

No work shall be done without appropriate lines and grades having been established in the field. Work done contrary to the instructions of the Engineer, work done beyond the lines shown on the plans, or extra work done without the Engineer's prior written direction to perform it will be considered as unauthorized and the Department will not pay for it. Work so done may be ordered removed or replaced at the Contractor's expense.

If the Contractor fails to comply with any order of the Engineer made under the provisions of this Article, the Engineer has the authority to cause unacceptable or unauthorized work to be remedied or removed and replaced by a party or parties other

than the Contractor, and to deduct the costs of such activities from any monies due or to become due to the Contractor from the Department or any other agency of the State.

The Contractor shall remove all materials that have a probability of containing asbestos if they failed to provide the manufacturer certification letter required by Article 1.20-1.05.02 unless a manufacturer certification letter is provided and is acceptable to the Designer. The Contractor shall remove all asbestos containing material that is found to have been installed. The Contractor shall replace the removed material with appropriate material. The Contractor shall pay for any asbestos testing charges the Department incurred in order to prove that the material contains asbestos fibers. This obligation will extend throughout the one year warranty period after the issuance of the Certificate of Compliance.

1.20-1.05.12—Facilities Construction - Payrolls: For each week of the Project from the first week during which an employee of the Contractor does Project work to which prevailing wage requirements apply, until the last week on which such an employee does such work, the Contractor shall furnish to the Engineer certified copies of payrolls showing

(a) the names of the employees who worked on the Project and whose work is subject to prevailing wage requirements,
(b) the specific days and hours and numbers of hours that each such employee worked on the Project, and
(c) the amount of money paid to each such employee for Project work.

Each such payroll shall include the statement(s) of compliance with prevailing wage laws required by the State of Connecticut and, if applicable, by the Federal government. Said payrolls must contain all information required by CGS Section 31-53 (as it may be revised). For contracts subject to Federal prevailing wage requirements, each payroll shall also contain the information required by the Davis Bacon and Related Acts (DBR). All of the payroll requirements in this Article shall also apply to the work of any subcontractor or other party that performs work on the Project site, and the Contractor shall be responsible for ensuring that each such party meets said requirements.

Every Contractor or subcontractor performing Project work is required to post the relevant prevailing wage rates as determined by the State Labor Commissioner and, on federal aid projects, those determined by the United States Secretary of Labor. The wage rate determinations shall be posted in prominent and easily accessible places at the work site.

1.20-1.05.13—Facilities Construction - Examining and Copying Contractor's Records: The Contractor shall permit the Department and its duly-authorized representatives to examine and copy all documents and other records of the Contractor that are relevant to charges for extra work, alleged breaches of Contract, or any formal or informal claim for additional compensation or for damages in connection with the Project.

With the exception noted below, the Contractor shall also permit the Department to examine and copy such of its documents and other records pertaining to the Project as the Department may deem necessary in order to determine whether or not the

Contractor has complied with all laws, regulations and other governmental mandates, e.g., those relating to labor compliance, affirmative action programs, and equal employment opportunity. Documents and other records relating to the Project, if they were created prior to the opening of bids for the Contract, and if they are sought by the Department only for the purpose of confirming such compliance with legal requirements, shall, however, not be subject to examination by the Department pursuant to this Article without the consent of the Contractor.

The Contractor further agrees that it shall keep all documents and other records relating to the Project at least until the expiration of 3 years after the date of acceptance of the Project by the Department, as designated in a "Certificate of Acceptance of Work and Acceptance of Project" (CON-13), issued by the Department. If any claims are brought by the Department or the Contractor prior to that expiration, however, the Contractor shall keep all such records until the Department has given the Contractor a full and final release from all pending and potential claims regarding the Project. If the Contractor does not so keep any such records, it may not assert any formal or informal claim for compensation or damages that could have been substantiated or disproven with such records.

The Contractor shall ensure that the requirements of this provision are made applicable to its subcontractors and suppliers, for the State's benefit, by including the operative language of this Article in its Project subcontracts and purchase agreements.

1.20-1.05.14—Facilities Construction - Termination for Convenience Clause: The State may terminate the Contract whenever the Engineer determines that such termination is in the best interests of the State. Any such termination shall be effected by delivery to the Contractor of a written Notice of Termination specifying the extent to which performance of work under the Contract is terminated and the date upon which said termination shall be effective.

In the case of such a termination, the Department will pay the Contractor at the Contract unit prices for the actual number of units or items of Contract work completed prior to the effective date of termination, or as may be agreed by the parties for such items of work partially completed. No claim for loss of overhead or anticipated profits shall be allowed.

When the volume of work completed is too small to compensate the Contractor under Contract unit prices for its related expenses, the Department may consider reimbursing the Contractor for such expenses.

Materials obtained by the Contractor for the Project, if they have been inspected, tested as required, and accepted by the Engineer, but have not been incorporated into the Project construction, shall, if the Engineer and the Contractor so agree, be purchased by the Department from the Contractor at their actual cost as shown by receipted bills. To this cost shall be added all actual costs for delivery at such points of delivery as may be designated by the Engineer, as shown by actual cost records. If the Engineer does not agree to purchase such materials, the Department shall reimburse the Contractor for any reasonable restocking fees and handling costs incurred by the Contractor in returning said materials to the vendor.

Termination of the Contract shall not relieve the Contractor of its responsibilities for the completed Project, nor shall it relieve the Contractor's surety of its obligation concerning any claims arising out of the work performed, until the requirements of Articles 1.20-1.08.13 and 1.20-1.08.14 have been met.

1.20-1.05.15—Facilities Construction - Markings for Underground Facilities: In conformance with Section 16-345 through 16-359 of the Regulations of the PURA, the Contractor is responsible for notifying “Call Before You Dig” prior to commencing any excavation, including milling, reclamation or trenching; and the Contractor shall install a warning tape located a minimum of 12 inches above all conduits, wires, cables, utility pipes, drainage pipes, underdrains, or other facility, unless the excavation’s depth, other underground facilities, or other engineering considerations make this minimum separation unfeasible. The warning tape shall be of durable impervious material, designed to withstand extended underground exposure without material deterioration or fading of color. The tape shall be of the color assigned to the type of facility for surface markings and shall be durably imprinted with an appropriate warning message. The tape shall also comply with the specific requirements of the utility that owns the facility.

All tapes, unless otherwise directed by the specific utility, shall be detectable to a depth of at least 3 feet with a commercial radio-type metal locator.

Assigned colors are:

Green—Storm and sanitary sewers and drainage systems, including force mains and other non-hazardous materials

Blue—Water

Orange—Communication lines or cables, including, but not limited to, those used in, or in connection with, telephone, telegraph, fire signals, cable television, civil defense, data systems, electronic controls and other instrumentation

Red—Electrical power lines, electrical power conduits and other electrical power facilities, traffic signals and appurtenances and illumination facilities

Yellow—Gas, oil petroleum products, steam, compressed air, compressed gases and all other hazardous material except water

Brown—Other

Purple—Radioactive materials

Payment for warning tapes shall be included in the bid price for the pay item of the specific facility for which the tape is used.

1.20-1.05.16—Facilities Construction - Dimensions and Measurements: The Contractor or one of its subcontractors shall verify each dimension that is needed in order to ensure that its work complies with the Contract, and must do so before ordering any material or doing any work for which such dimension is needed. Such dimensions include, but are not limited to, dimensions given on the plans, as well as dimensions of structures in place prior to Project construction or installed in the course of construction. The Contractor or any subcontractor that finds a discrepancy or error in dimensions must report it promptly to the Engineer and may proceed with affected work only after receiving clarification and direction from the Engineer regarding the matter. Any costs

for delays, changes, cutting or repairs that are incurred due to the Contractor's failure to observe the above requirements shall be borne by the Contractor.

1.20-1.05.17—Facilities Construction - Welding: The Contractor shall ensure that all welding of materials permanently incorporated into the work, and welding of materials used temporarily during construction of the work is performed in accordance with the following codes:

- AWS Structural Welding Code – Steel – ANSI/AWS D1.1: Miscellaneous steel items that are statically loaded including but not limited to columns, and floor beams in buildings, railings, sign supports, cofferdams, tubular items, and modifications to existing statically loaded structures.
- AWS Structural Welding Code – Aluminum – AWS D1.2/D1.2M: Any aluminum structure or member including but not limited to brackets, light standards, and poles.
- AWS Structural Welding Code – Sheet Steel – AWS D1.3/D1.3M: Sheet steel and cold-formed members 0.18 in or less in thickness used as, but not limited, to decking and stay-in-place forms.
- AWS Structural Welding Code – Reinforcing Steel – AWS D1.4/D1.4M: Steel material used in the reinforcement of cast-in-place or pre-cast Portland cement concrete elements including but not limited to bridge decks, catch basin components, walls, beams, deck units, and girders.
- AASHTO/AWS – Bridge Welding Code, AASHTO/AWS D1.5/D1.5M: Steel highway bridges and other dynamically loaded steel structures. Also includes sign supports, and any other fracture critical structure.

The edition governing the work shall be in effect on the date the Contract was advertised for solicitation of bids.

The Contractor is responsible to provide a Certified Welding Inspector in accordance with the above noted codes. The cost for this service is included in the general cost of the work.

All welders shall be certified by the Engineer in accordance with Section 6.03.

1.20-1.05.23—Facilities Construction -Requests for Information (RFI's) and Requests for Change (RFC's): The Contractor shall forward all RFIs and RFCs to the Engineer by in PDF format for review. The Engineer will forward the RFI or RFC to the Designer for review. Upon receipt of an RFI or RFC, the Designer will attempt to determine if additional information is required from the Contractor to respond to the RFI or RFC, and request said information from the Engineer.

All RFI's will be responded to within 10 calendar days of receipt by the Designer. All RFC's will be responded to within 21 calendar days of receipt by the Designer.

1.20-1.05.24—Facilities Construction -Project Meetings: In order to maximize effective use of time, and to minimize disruption during construction, the Contractor shall work closely with the Engineer to combine required meetings when possible.

1. **Pre-Construction Meetings:** The Engineer will schedule a pre-construction and

organizational meeting at the District Office or other convenient location after the Award of the Contract. At such meeting, the Engineer will review the parties' responsibilities and personnel assignments.

The Engineer, Designer, Owner, the Contractor and its project coordinator, superintendent, major subcontractors, and other concerned parties shall attend the meeting. All participants at the meeting shall be familiar with the Project and authorized to conclude matters relating to the Project.

The Engineer will distribute copies of minutes of the Pre-Construction Meeting to all attendees. The Contractor shall distribute copies to other parties who were not present at the meeting.

2. Pre-Installation Meetings: The Engineer, Designer, the Contractor's project coordinator, superintendent, the Installer, technical and field service engineering representatives of each manufacturer and fabricator involved in or affected by the installation, and other representatives required for coordination or integration of Project work or materials shall attend the scheduled Pre-Installation Meeting. All meeting participants shall be familiar with the Project and authorized to conclude matters relating to the Project.

The meeting participants shall review progress of other construction activities and preparations for the particular activity under consideration, including requirements of Contract documents, related requests for interpretations, related construction orders, purchases, deliveries, submittals, review of mockups, possible conflicts, compatibility problems, time schedules, weather limitations, manufacturer's written recommendations, warranty requirements, compatibility of materials, acceptability of substrates, temporary facilities and controls, space and access limitations, regulations of authorities having jurisdiction, testing and inspecting requirements, installation procedures coordination with other work, required performance results, protection of adjacent work, and protection of construction and personnel.

The Engineer will distribute copies of minutes of the meeting to the Designer and the Contractor. The Contractor shall distribute copies to parties who were or should have been at the meeting.

3. Progress Meetings: The Engineer will conduct progress meetings at the Project site at regularly scheduled intervals, but no less than twice a month.

The Contractor shall provide the Engineer with a detailed agenda for the proposed meeting, specifying what topics will be covered. In addition to representatives of the Engineer, the Contractor's project coordinator and superintendent, each subcontractor, supplier or other entity concerned with current progress or involved in planning, coordination or performance of future activities shall attend these meetings. All participants at the meeting shall be familiar with the Project and authorized to conclude matters relating to the Project.

At each progress meeting, the participants shall (1) review items of significance that could affect progress; (2) discuss topics appropriate to the current status of the Project; (3) review progress since the last meeting; (4) determine whether each activity is on time, ahead of schedule, or behind schedule, in relation to the Contractor's Construction Schedule; (5) determine how to expedite any Project work that may be behind schedule; (6) discuss whether or not schedule revisions are required to ensure that current and

subsequent activities will be completed within the Contract time; and (7) review the present and future needs of each entity represented at the meeting, including such items as interface requirements, time, sequences, deliveries, off-site fabrication problems, access, site utilization, temporary facilities and controls, hours of work, hazards and risks, housekeeping, quality and work standards, status of correction of deficient items, field observations, requests for interpretations, status of proposal requests, pending changes, status of construction orders, and documentation of information for payment requests.

The Contractor shall provide the Engineer, for inclusion in the meeting minutes, a brief summary of the Project's progress since the previous meeting.

The Engineer will distribute copies of minutes of the meeting to the Designer and the Contractor. The Contractor shall distribute copies to parties who were or should have been at the meeting.

4. Coordination Meetings: The Engineer will conduct Project coordination meetings as necessary, and shall follow the procedures established for progress meetings.

The Contractor shall request representation at each meeting by every party currently involved in coordination or planning for the construction activities involved.

The Engineer will record meeting results and distribute copies to everyone in attendance, the Designer, and to the Contractor to be distributed to others affected by decisions or actions resulting from each meeting.

5. Project Closeout Meeting: The Engineer will conduct a Project closeout meeting no later than 90 days prior to the anticipated expiration of Contract Time to review the requirements and responsibilities related to Project closeout.

The Engineer, Designer, Owner, the Contractor and its project coordinator, superintendent, major subcontractors, and other concerned parties shall attend the meeting. All participants at the meeting shall be familiar with Project and authorized to conclude matters relating to the Work.

The meeting participants shall discuss items of significance that could affect or delay Project closeout, including the following: (1) preparation of record documents; (2) procedures required prior to inspection for Semi-Final and Substantial Completion for acceptance; (3) submittal of written warranties; (4) requirements for preparing operations and maintenance data; (5) requirements for delivery of spare parts; (6) requirements for demonstration and training; (7) submittal procedures; (8) coordination of separate contracts or work to be performed by others; (9) Owner's partial occupancy requirements; (10) installation of Owner's furniture, fixtures, and equipment; and (11) responsibility for removing temporary facilities and controls.

The Engineer will record meeting results and distribute copies to everyone in attendance, the Designer, and to the Contractor to be distributed to others affected by decisions or actions resulting from the meeting.

SECTION 1.20-1.06
CONTROL OF MATERIALS FOR FACILITIES CONSTRUCTION

1.20-1.06.01—Facilities Construction - Source of Supply and Quality
1.20-1.06.02—Facilities Construction - Samples and Test

1.20-1.06.03—Facilities Construction - Storage
1.20-1.06.04—Facilities Construction - Defective Materials
1.20-1.06.05—Facilities Construction - Facilities Construction - Shipping Material
1.20-1.06.06—Facilities Construction - Vacant
1.20-1.06.07—Facilities Construction - Certified Test Reports and Materials Certificates
1.20-1.06.08—Facilities Construction -Warranties
1.20-1.06.25—Facilities Construction- Product Selection

1.20-1.06.01—Facilities Construction - Source of Supply and Quality: The Contractor must obtain the Engineer's approval of the source of supply for each of the materials specified in the Contract before beginning delivery of such materials to the Project site. If, at any time, the Department discovers that a source of supply that had been approved does not furnish uniform materials, or if the material from any source proves unacceptable to the Engineer, the Engineer will so notify the Contractor. Thereafter, the Contractor shall furnish only approved materials from other approved sources for the Project, and shall use such approved materials to replace any previously-furnished materials that have been rejected by the Engineer. Only materials conforming to the requirements of these specifications and approved by the Engineer shall be used for the Project.
No material that, after approval, has in any way become unfit for use shall be used for the Project.

All permanently incorporated steel and iron used in the construction of the Project must have been produced and fabricated in the United States. It is the express intent of this specification to require that all manufacturing processes for all steel and iron materials and products to be used for the Project, including the coating of steel and iron, occur within the United States, with the following exceptions:

The Contractor may request, in accordance with Section 635.410(b)(4) of Title 23 CFR, approval to include a minimal amount of foreign steel in the Project construction. This amount is defined as 1/10 of 1% of the total Contract price or $2,500.00, whichever is greater. The cost of the foreign steel or iron is defined as its Contract value when delivered to the Project site.

Additionally, the FHWA has granted a nationwide waiver of the requirements of 23 CFR 635.410, Buy America requirements, for the production of pig iron and processed, pelletized, and reduced iron ore. Items not specifically included in the waiver remain subject to the Buy America requirements. The Contractor may request the Engineer to seek from the FHWA a further waiver of said requirements, but it shall be at the sole discretion of the Engineer whether or not to seek such a waiver.

When the Contractor proposes to use materials from a source not currently approved by the Engineer, the Contractor shall submit as a prerequisite to consideration for source approval such evidence as the Engineer may request, showing that the materials from the proposed source meet the Contract requirements and will be available to the Contractor in sufficient quantity to assure continuous and satisfactory progress of the Project.

Should it become necessary after award of the Contract for the Contractor to obtain

material from sources other than those indicated in the statement on materials sources that is furnished by the Department prior to award, the Contractor shall furnish a supplementary statement and required samples of said proposed materials to the Engineer not less than 10 calendar days prior to placing an order for any such material.

For any material that requires more than one month for delivery, the Contractor shall provide the Engineer with documentary proof that said material has been ordered in sufficient time to complete the Project as planned. Failure to produce such documentary proof will result in a denial of any claim for a time extension based on late delivery of such material.

When one manufacturer's product is specified in the Contract, it shall be understood that this represents the standard required, but that a comparable product of another manufacturer may be considered as an equal and may be approved, unless the plans or special provisions indicate that no equal shall be allowed. Should a Contractor desire to use a product that he considers equal or superior to the one material specified, the Contractor shall submit for review in accordance with Article 1.20-1.05.02. Should an equal product be permitted, this shall not change any Contract requirement for a related Certified Test Report and Materials Certificate.

The identification of a manufacturer or fabricator in the Contract does not imply acceptability of products from the named entity. All products must satisfy the Contract criteria for performance, efficiency, materials, and special accessories.

To the fullest extent possible, the Contractor shall provide products of the same kind from a single source. When specified products are available only from sources that do not or cannot produce a quantity adequate to complete Project requirements in a timely manner, the Contractor shall consult with the Engineer to determine the most important product qualities before proceeding. Such qualities may include attributes such as visual appearance, strength, durability, or compatibility. When the Engineer has made such a determination, the Contractor shall select products in accordance with said determination to the fullest extent possible.

With respect to the Project, all products selected by the Contractor must be compatible with its previously selected products.

The Contractor shall place a permanent nameplate on each item of service-connected or power-operated equipment. In occupied spaces, the nameplate shall be located on an easily-accessible but inconspicuous surface. The nameplate shall contain: name of product and manufacturer, model and serial number, capacity, speed, ratings, and other essential operating data.

Except for required labels and operating data, the Contractor shall not attach or imprint manufacturer's or producer's nameplates or trademarks on exposed surfaces of products that will be exposed to view in occupied spaces or on a structure’s exterior. The Contractor shall locate required product labels and stamps on concealed surfaces or, if required for observation after installation, on accessible but inconspicuous surfaces.

1.20-1.06.02—Facilities Construction - Samples and Test: The Contractor must obtain the Engineer's approval of any sources of materials to be incorporated into the Project before beginning to use them for the Project.

Approval of material sources may be by (1) certification accepted by the Engineer, (2) written permission of the Engineer, or (3) prior approval after documented test or inspection of the source by the Department. Any Project work in which materials from unapproved sources are used may be considered unauthorized by the Engineer, and therefore not to be paid for. Materials tests or inspection from sources or material delivered to a project site, when required, will be made by and at the expense of the Department, unless otherwise noted in the Contract.

Certification may be used as the basis for approval of such materials, as the Contract documents specify or as the Engineer may require. With regard to such materials, the Contractor shall furnish the Engineer a Certified Test Report and Materials Certificate, conforming to Article 1.20-1.06.07, as may be required in the “Minimum Schedule for Acceptance Testing” for each type of material. The Contractor shall bear any costs involved in furnishing the Test Report and Certificate.

If the Contractor has purchased materials for use on a previous Department project, and if they comply with the requirements of this Contract, then those materials, with the approval of the Engineer, may be used for the Project, provided that the Contractor, acting as the materials supplier, submits a related Materials Certificate conforming to Article 1.20-1.06.07. This Materials Certificate shall further identify the project for which the material was originally purchased and shall be accompanied by a copy of the original Certificate.

Material samples required by the Department will be as indicated in the latest edition of the "Minimum Schedule for Acceptance Testing," and tests will be performed in accordance with the latest revision of the standard method of AASHTO or ASTM, or in accordance with other standards accepted by the Department which are in effect at the time of bidding, unless otherwise specified on the plans or in the special provisions. Any items not covered in the "Minimum Schedule for Acceptance Testing," special provisions, or plans shall be sampled and tested or certified, as directed by the Engineer.

The Contractor shall submit to the Engineer representative preliminary samples of any materials proposed for Project use, without charge by the Contractor or the producer of the materials. Samples submitted shall be taken by a representative of the Department or a commercial laboratory approved by the Engineer. All such materials shall be subject to inspection, testing or re-testing at the Engineer's direction at any time during their manufacturing, fabrication or use.

The Contractor shall furnish all required samples without charge, and provide secure facilities for their storage. The Contractor shall provide means for, and shall assist in the verification of, all scales, measures and other devices that it operates or uses in connection with the Project.

Materials will be rejected by the Engineer whenever, in his judgment, they fail to meet Contract requirements. The Engineer may accept material or combination of materials and thereby waive noncomplying test results, provided that the following conditions are met:

1. The Engineer finds results of prior and subsequent series of tests of the material or materials from the same source or sources to be satisfactory.

2. The incidence and degree of nonconformance with the Contract requirements are, in the Engineer's judgment, within reasonable limits.
3. The Contractor, in the Engineer's judgment, had diligently exercised material controls consistent with good practices.
4. No adverse effect on the value or serviceability of the completed work could result from said degree of nonconformance.

The Engineer may, in his discretion, waive testing of minor quantities of a particular material if said material was obtained from sources that have furnished supplies of the material that have consistently met Department testing standards.

1.20-1.06.03—Facilities Construction - Storage: The Contractor shall store all materials for the Project in a way that ensures that their quality and fitness for the Project will be preserved, and that the Engineer will have easy and prompt access to them for inspection purposes. Materials shall be kept on wooden platforms or on other hard, clean surfaces and not on the ground. When so directed by the Engineer, the Contractor shall store materials in a weatherproof building.

The Contractor shall not store materials in any way that would lead to a violation of Article 1.20-1.10.01 through 1.20-1.10.08 of these specifications. Stored materials, even if they have been approved by the Engineer prior to their storage, must be inspected by the Engineer and meet all pertinent Contract requirements immediately prior to use of those materials for the Project.

The Contractor shall (1) store products in accordance with the manufacturer's recommendations; (2) store products at the site in a manner that will facilitate inspection and measurement or counting of units; (3) store heavy materials away from Project structures so as not to endanger the supporting construction; (4) if the products are subject to damage by the elements, store them off the ground, under cover in a weatherproof enclosure, with ventilation adequate to prevent condensation; and (5) maintain temperature and humidity within any range recommended by the manufacturer.

Off-site staging and storage of materials and equipment may be required due to restrictive Project Limits and other operational constraints. Arrangement for off-site staging and storage of materials and equipment shall be the responsibility of the Contractor. Payment for off-site staging and storage of materials and equipment shall be in accordance with Article 1.20-1.09.06.

1.20-1.06.04—Facilities Construction - Defective Materials: Unless otherwise permitted by the Engineer, all materials not conforming to Contract requirements shall be considered defective, shall be rejected, and shall be removed immediately from the Project site.

If deemed necessary by the Engineer, the Engineer may require the retesting of materials previously tested, approved and incorporated into the Project. If, after such retesting, the materials are found not to conform to the Contract, the Engineer may, however, allow the Contractor to leave the materials in place, provided that an equitable reduction of the payment for the materials shall be made. No rejected material, the defects of which have been subsequently corrected, shall be used until approval for

such use has been given by the Engineer. Should the Contractor fail to comply with any order of the Engineer made under the provisions of this article, the Engineer shall have authority to remove and replace defective material, and to deduct the cost of such removal and replacement from any money due or to become due to the Contractor.

When a material is fabricated or treated with another material, or when any combination of materials is assembled to form a product, any or all of which are covered by the Contract specifications, the failure of any components of the product to comply with the specifications may be sufficient cause for the rejection of the whole combination or product.

Materials that have been shipped from approved deposits or sources of supply, but which are found to be defective upon their delivery to the Department, to the Project site, or to any testing or storage site approved by the Engineer, shall not be used for the Project.

1.20-1.06.05—Facilities Construction - Shipping Material: Any conveyance used for transporting materials must be clean when used, be in proper working condition, have a strong and substantial body that will prevent the loss of materials during transportation, and be approved by the Engineer.

1.20-1.06.06—Facilities Construction - Vacant

1.20-1.06.07—Facilities Construction - Certified Test Reports and Materials Certificates: The Contractor shall furnish the Engineer with any Certified Test Report and Materials Certificate required by the Contract or the "Minimum Schedule for Acceptance Testing."

The Contractor shall forward the Certified Test Report and Materials Certificate to the Engineer, and, in addition, shall deliver a copy of same to the Department's inspector at the Site. Materials for which such documentation is required may be conditionally incorporated into the Project prior to the Engineer’s acceptance of a Certified Test Report and a Materials Certificate; however, payment for such incorporated material will not be made prior to receipt of a Certified Test Report and Materials Certificate indicating that the materials meets the Contract requirements.

A Certified Test Report is a document containing a list of the dimensional, chemical, metallurgical, electrical and physical results obtained from a physical test of the materials involved, and shall certify that the materials meet the requirements of the Contract. Such Report shall also include the following information:

(1) Item number and description of materials
(2) Date of manufacture
(3) Date of testing
(4) Name of organization to which the material has been consigned
(5) Quantity of material represented, such as batch, lot, group, etc.
(6) Means of identifying the consignment, such as label, marking, lot number, etc.
(7) Date and method of shipment
(8) Name of organization performing tests

The Certified Test Report shall be signed by a duly-authorized and responsible agent for the organization manufacturing the materials, and the signature must be notarized.

A Materials Certificate is a document certifying that the materials, components and equipment furnished conform to all requirements of the Contract plans and specifications. Such Certificate shall also include the following information:

(1) Project for which the material has been consigned
(2) Name of Contractor to which material is supplied
(3) Item number and description of material
(4) Quantity of material represented by the certificate
(5) Means of identifying the consignment, such as label, marking, lot numbers, etc.
(6) Date and method of shipment

The Materials Certificate shall be signed by a duly-authorized and responsible agent for the organization supplying the material, and the signature must be notarized.

The Contractor shall be responsible for any testing, Materials Certificates, and inspections required under individual sections of the Special Provisions.

1.20-1.06.08—Facilities Construction - Warranties: Warranties shall be delivered to the Designer prior to acceptance of the Project.

Standard warranties are written warranties published by individual manufacturers for particular products, which are specifically endorsed by the manufacturer to the State. Special warranties are written warranties required by the Contract, either to extend time limits provided by standard warranties or to provide greater rights for the State. All required warranties shall be endorsed to, or have named as obligee, the State.

Manufacturer's disclaimers and limitations on product warranties do not relieve the Contractor of the Contractually-required warranty, that incorporates the products, nor does it relieve suppliers, manufacturers, and subcontractors required by the Contract to countersign special warranties with the Contractor.

Unless otherwise directed by the Engineer, the commencement date for warranties shall be the date of the issuance of the Certificate of Compliance. When a designated portion of the Project is completed and used by the Engineer or occupied by the Owner, by separate agreement with the Contractor during the construction period, the Contractor shall coordinate with the Engineer the submission date for properly-executed warranties and commencement date for those affected warranties. When a special warranty is required to be executed by the Contractor, or by the Contractor and a subcontractor, supplier or manufacturer, the Contractor shall prepare a written document that contains appropriate terms and identification, ready for execution by the required parties.

Written warranties made to the Engineer shall be deemed to supplement implied warranties, and shall not limit the duties, obligations, rights or remedies otherwise available under the law, nor shall warranty periods be interpreted as limitations of the time in which the Engineer can enforce such other duties, obligations, rights, or remedies.

The Contractor shall submit draft warranties for approval prior to final execution. The Engineer reserves the right to reject warranties and to limit selections to products with warranties that do not conflict with Contract requirements.

Where the Contract requires a special warranty, or similar commitment regarding the Project or part of the Project, the Engineer reserves the right to refuse to accept the related work until evidence is presented that entities required to countersign such commitments are willing to do so.

Prior to the date for the Substantial Completion Inspection, the Contractor shall compile 3 copies of each required warranty, properly executed by the Contractor or any other required party. The Contractor shall place the warranty documents in an orderly sequence based on the organization of the Contract provisions (including specific CSI-formatted specifications contained within a particular Special Provision).

The Contractor shall:

(a) Bind warranties in heavy-duty, commercial-quality, durable 3-ring vinyl-covered loose-leaf binders, thick enough to accommodate the contents, and sized to receive 8 1/2-inch x 11-inch paper paper.

(b) Identify the binder's contents on the binder's front and spine with the typed or printed title "WARRANTIES," the Project title or name, and the name of the Contractor.

(c) Provide a heavy paper divider with a tab for each separate warranty.

(d) Mark the tab to identify the related product or installation.

(e) Provide a typed description of the product or installation, including the name of the product, and the name, address and telephone number of the Contractor or pertinent subcontractor.

(f) Furnish to the Department a written warranty for all Project work accompanied by a cover letter with the following contents:

[Addressed to:]

Commissioner of Transportation
Department of Transportation
P.O. Box 317546
Newington, Connecticut 06131-7546

Project Title and Number

[We] hereby warrant all materials and workmanship for all work performed under this Contract for a period of one (1) year from [date of issuance of C.O.C.] against failures of workmanship and materials in accordance with the Contract. Furthermore, as a condition of this warranty, [we] agree to have in place all insurance coverage identified in the Contract for the performance of any warranty work.

[Signature:] [Name of authorized signatory]
[Title]

(g) Submit to the Engineer, upon completion of installation of materials or assemblies that are required to have either a flame-rating or a fire-endurance hourly rating, a detailed letter certifying that the required rating has been attained.

Upon determination by the Engineer that Project work covered by a warranty has failed, the Contractor shall replace or rebuild the work to an acceptable condition complying with Contract requirements. The Contractor is responsible for the cost of replacing or rebuilding defective construction or components and those which may have needed to be damaged or removed in order to cure the defective work including costs of material, equipment, labor, and material disposal, regardless of whether or not the State has benefited from use of the work through a portion of its anticipated useful service life. The Contractor shall respond to the Project Site when Project work covered by a warranty has failed within 3 calendar days, unless in the Engineer's opinion said failure is deemed to be an emergency, in which case the Contractor shall respond to the Project Site as directed by the Engineer.

When Project work covered by a warranty has failed and been corrected by replacement or rebuilding, the Contractor shall reinstate the warranty by written endorsement. The reinstated warranty shall be equal to the time that remains on the original warranty period at the time of the failure.

1.20-1.06.25—Facilities Construction -Product Selection: The Contractor shall provide products that comply with the Contract, that are undamaged and, unless otherwise indicated, unused at the time of installation. The Contractor shall provide products complete with accessories, trim, finish, safety guards and other devices and details needed for a complete installation and the intended use and effect. The Contractor shall provide standard products of types that have been produced and used successfully in similar situations on other projects, when such products are available, unless the Contract requires otherwise. Descriptive, performance, and reference standard requirements in the Contract provisions establish salient characteristics of products.

Contractor's options for selecting products are limited by the Contract and governing regulations, and are NOT controlled by industry traditions or procedures used by the Contractor on previous construction projects. Procedures governing product selection include the following:

(a) The Contractor shall not use product substitutes as defined in Article 1.20-1.01.01.

(b) Semi-proprietary Specification Requirements: When the Contract lists 3 or more acceptable products or manufacturers unaccompanied by the term "Or Equal," the Contractor shall provide one of the products indicated. In such a case, no "Equal" will be permitted.

(c) Non-Proprietary Specification Requirements: When the Contract lists products or manufacturers whose products are available and may be incorporated into the Project, or when the list is accompanied by the term "Or Equal," then the Contractor is not restricted to use those products, but may propose any available product that complies with Contract requirements.

(d) Descriptive Specification Requirements: When the Contract describes a product or assembly, listing exact characteristics required, with or without use of a brand or trade name, the Contractor shall provide a product or assembly that provides those characteristics and otherwise complies with the Contract.

(e) Performance Specification Requirements: When the Contract contains performance requirements, the Contractor shall provide products that comply with those requirements, and that are recommended by the manufacturer for the application indicated. Such recommendations may be derived from the manufacturer's published product literature or by the manufacturer's certification of performance.

(f) Visual Matching: When the Contract requires matching an established sample, the Engineer's decision will be final as to whether or not a proposed product matches satisfactorily. When no product available within the specified category matches satisfactorily and complies with other specified requirements, the Contractor shall comply with Contract provisions concerning "Or Equal" submissions for selection of a matching product in another product category.

(g) Visual Selection: When a Contractual product requirement includes the phrase "...as selected by the Designer from manufacturer's full range ..." or a similar phrase, the Contractor shall select a product line that complies with Contract requirements. The Designer will select the color, gloss, pattern, density, or texture from the product line that includes both standard and premium items. Bids will be based on premium items.

(h) Basis-of-Design Product Specification: A specification in which a specific manufacturer's product is named and accompanied by the words "basis-of-design," including make or model number or other designation, to establish the significant qualities related to type, function, dimension, in-service performance, physical properties, appearance, and other characteristics for purposes of evaluating comparable products of additional manufacturers.

SECTION 1.20-1.07
LEGAL RELATIONS AND RESPONSIBILTIES FOR FACILITIES CONSTRUCTION

1.20-1.07.01—Facilities Construction - Laws to Be Observed
1.20-1.07.02—Facilities Construction - Permits and Licenses
1.20-1.07.03—Facilities Construction - Proprietary Devices, Materials and Processes
1.20-1.07.04—Facilities Construction - Restoration of Surfaces Opened Pursuant to Permit or Contract
1.20-1.07.05—Facilities Construction - Load Restrictions
1.20-1.07.06—Facilities Construction - Sanitary Provisions
1.20-1.07.07—Facilities Construction - Safety and Public Convenience
1.20-1.07.08—Facilities Construction - Use of Explosives
1.20-1.07.09—Facilities Construction - Protection and Restoration of Property
1.20-1.07.10—Facilities Construction - Contractor's Duty to Indemnify the State against Claims for Injury or Damage
1.20-1.07.11—Facilities Construction - Opening of Section of Project to Traffic or Occupancy
1.20-1.07.12—Facilities Construction - Contractor's Responsibility for Work

1.20-1.07.13—Facilities Construction - Contractor's Responsibility for Adjacent Property, Facilities and Services
1.20-1.07.14—Facilities Construction - Personal Liability of Representatives of the State
1.20-1.07.15—Facilities Construction - No Waiver of Legal Rights
1.20-1.07.16—Facilities Construction - Unauthorized Use of Area(s) within the Project Site
1.20-1.07.17—Facilities Construction - Vacant
1.20-1.07.18—Facilities Construction - Use of State Property

1.20-1.07.01—Facilities Construction - Laws to Be Observed: The Contractor at all times shall observe and comply with all laws, ordinances, government bylaws, permits, regulations, orders and decrees which in any manner affect the conduct of the Contract work. The Contractor shall indemnify and save harmless the State and all of its officers, employees and agents against any claim, fine, or other liability arising from or based on the violation of any such law, bylaw, permit, ordinance, regulation, order or decree, whether by the Contractor, its subcontractors or any of their officers, employees or agents. See the third paragraph in Article 1.20-1.02.13, however, regarding conflicts between municipal law or authorities and the requirements of Project construction.

1.20-1.07.02—Facilities Construction - Permits and Licenses: Except as may be provided otherwise in a specific Contract provision or a written direction from the Engineer, the Contractor shall procure all permits and licenses, pay all charges and fees, and give all notices required by government authorities in connection with the due prosecution of the Project.

The Contractor will not be required to apply for a Building Permit from the local Building Official since the state will issue a Notice of Intent to Construct (NOIC) as the Building Permit.

The Contractor shall apply for and obtain a demolition permit from the municipality for each building to be demolished prior to initiating any demolition activities in accordance with CGS 29-401 through 29-415. Said statutes permit a waiting period from the demolition permit application to approval of not more than 90 days so the Contractor shall schedule its work accordingly.

The Contractor shall apply for and obtain the necessary permits related to the installation of wells and septic systems.

Under Connecticut law, a commercial vehicle used by a contractor or vendor in connection with the Project may be subject to Connecticut registration requirements. The CGS require such registration for any vehicle that most often is garaged in this State, or that most often leaves from and returns to one or more points within this State in the normal course of its operation. In addition, a vehicle must be registered in Connecticut if it continuously receives and discharges cargo within this State. Reciprocal registrations as allowed under CGS are acceptable for meeting the registration requirements.

Residence or domicile of the owner, lessor or lessee of the motor vehicle, or the place where the owner, lessor or lessee is incorporated or organized, shall not be a factor in

determining whether or not the vehicle must be registered in this State. Failure to register a vehicle, if the law requires it, may result in issuance of a citation for such an infraction, and also may result in administrative action by the Commissioner of Motor Vehicles.

The registration requirement applies not only to the Contractor, but also to its subcontractors, suppliers, and other agents and representatives. It is the Contractor's responsibility to ensure that such entities and individuals comply with this requirement as well. The Contractor shall maintain, on the Project Site, records that document compliance with this requirement in connection with all vehicles used for the Project.

1.20-1.07.03—Facilities Construction - Proprietary Devices, Materials and Processes: If the Contractor is required or desires to use any design, device, material or process covered by another party's license, patent, copyright or trademark, the Contractor shall provide for such use by suitable legal agreement with the license, patent, copyright or trademark holder.

The Contractor shall provide a copy of any and all such agreements to the Engineer.

If the Contractor is allowed, but not specifically required by the Engineer, to use any particular proprietor's design, device, material or process covered by license, patent, copyright or trademark, the Contractor and its surety shall indemnify and save harmless the State from any and all claims that may be brought against the State, and any and all costs, expenses, and damages that the State may be obligated to pay by reason of any infringement or alleged infringement relating to the use of such licensed, patented, copyrighted or trademarked design, device, material or process at any time during the prosecution or after the completion of the Project.

1.20-1.07.04—Facilities Construction - Restoration of Surfaces Opened Pursuant to Permit or Contract: The Contractor shall not make, and shall not allow any person to make, an opening in a highway unless written and duly-authorized permission to do so has been obtained from the Department. If at any time prior to the completion of the Project, the Contractor should make such an opening without such permission, the Contractor shall perform all restoration necessary to close said opening, at its own expense, if the Engineer directs it to do so.

1.20-1.07.05—Facilities Construction - Load Restrictions

(a) Vehicle Weights: This subarticle will apply to travel both on existing pavements and pavements under construction. The Contractor shall comply with all legal load restrictions as to vehicle size, the gross weight of vehicles, and the axle weight of vehicles while hauling materials. Throughout the duration of the Contract, the Contractor shall take precautions to ensure existing and newly installed roadway structures and appurtenances are not damaged by construction vehicles or operations.

Unless otherwise noted in Contract specifications or plans, on and off road equipment of the Contractor, either loaded or unloaded, will not be allowed to travel across any bridge or on any highway when such a vehicle exceeds the statutory limit or posted limit of such bridge or highway. Should such movement of equipment become necessary the Contractor shall apply for a permit from the Department for such travel, as provided

in the CGS. The movement of any such vehicles within the Project limits or detour routes shall be submitted to the Engineer for Project record. Such permit or submittal will not excuse the Contractor from liability for damage to the highway caused by its equipment.

The Contractor is subject to fines, assessments and other penalties that may be levied as a result of violations by its employees or agents of the legal restrictions as to vehicle size and weight.

(b) Storage of Construction Materials/Equipment on Structures: Storage is determined to be
non-operating equipment or material. The Contractor shall not exceed the statutory limit or posted limit for either an existing or new structure when storing materials and/or construction equipment. When a structure is not posted, then the maximum weight of equipment or materials stored in each 12 foot wide travel lane of any given span shall be limited to 750 pounds per linear foot combined with a 20,000 pound concentrated load located anywhere within the subject lane. If anticipated storage of equipment or material exceeds the above provision, then the Contractor shall submit its proposal of storage supported by calculations stamped by a Professional Engineer registered in the State of Connecticut, to the Engineer for approval 14 days prior to the storage operation. Operations related to structural steel demolition or erection shall follow the guidelines under Section 6.03. All other submittals shall include a detailed description of the material/equipment to be stored, the quantity of storage if it is stockpiled materials, the storage location, gross weight with supporting calculations if applicable, anticipated duration of storage and any environmental safety, or traffic protection that may be required. Storage location on the structure shall be clearly defined in the field. If structures are in a state of staged construction or demolition, additional structural analysis may be required prior to authorization of storage.

1.20-1.07.06—Facilities Construction - Sanitary Provisions: The Contractor shall provide and maintain in a neat and sanitary condition such accommodations for the use of its employees as may be necessary to comply with the regulations and other requirements of the State Department of Public Health or of other bodies or tribunals having jurisdiction over such matters.

The Contractor may not use the State's existing toilet facilities.

1.20-1.07.07—Facilities Construction - Safety and Public Convenience: The Contractor shall conduct the Project work at all times in such a manner as to ensure the least possible obstruction to traffic. In a manner acceptable to the Engineer, the Contractor shall provide for the convenience and interests of the general public; the traveling public; parties residing along or adjacent to the highway or Project site; and parties owning, occupying or using property adjacent to the Project site, such as commuters, workers, tenants, lessors and operating agencies.

Notwithstanding any other Contract provision, the Contractor shall not close to normal pedestrian or vehicular traffic any section of road, access drive, parking lot, sidewalk, station platform, railroad track, bus stop, runway, taxiway, occupied space within a site, or occupied space within a building, except with the written permission of the Engineer.

All equipment, materials, equipment or material storage areas, and work areas must be placed, located, and used in ways that do not create a hazard to people or property, especially in areas open to public pedestrian or vehicular traffic. All equipment and materials shall be placed or stored in such a way and in such locations as will not create a hazard to the traveling public. In an area unprotected by barriers or other means, equipment and materials must not be stored within the clear zone of any traveled way. Clear zones are based on design speed and roadway geometry. The following minimum distances, measured from edge of travelway to the temporary hazard, are recommended:

Posted Speed Limit, mph	**Distance, feet**
55 or more	30
45 to 55	24
under 45	16

The Contractor must always erect barriers and warning signs between any of its work or storage areas and any area open to public, pedestrian, or vehicular traffic. Such barriers and signs must comply with all laws and regulations, including any applicable codes.

The Contractor must arrange for temporary lighting, snow and ice removal, security against vandalism and theft, and protection against excessive precipitation runoff within its Project work and storage areas, and within other areas specifically designated in the Contract.

In addition to meeting the requirements of Article 9.71, the Contractor shall take all precautions necessary and reasonable for the protection of all persons, including, but not limited to, employees of the Contractor or the Department, and for the protection of property, until the Engineer notifies the Contractor in writing that the Project or the pertinent portion of the Project has been completed to the Engineer’s satisfaction. The Contractor shall comply with the safety provisions of applicable laws, including building and construction codes and the latest edition of the CFR. The Contractor must make available for reference in its field office, throughout the duration of the Project, a copy of the Safety Plan and the latest edition, including all supplements, of the CFR pertaining to OSHA.

The Contractor shall furnish to the Engineer's representative supervising the Project a report on any accident that occurs on the Project site with regard to which the Contractor is required to report under OSHA or any other legal requirement. The Contractor shall also furnish to the Engineer a report regarding any other accident involving public liability or property damage in connection with the Project. The form and detail of such reports must be acceptable to the Engineer.

The Contractor shall designate a competent representative with authority to act in cooperation with the Department in the enforcement of safety provisions and promotion of safe practices on and related to the Project throughout the duration of the Project.

Before beginning work on the Project, the Contractor shall have a Safety Plan on file with the Department. The Safety Plan shall include the policies and procedures necessary for the Contractor to comply with OSHA and other pertinent regulatory rules, regulations and guidelines. The Safety Plan may be a comprehensive company-wide

plan provided it addresses the scope and type of work contemplated by the Contract. The Safety Plan shall address all the requirements of this Section and any applicable State or Federal regulations, and shall be revised and updated as necessary.

The following elements shall be included in the Safety Plan:

1. General introduction describing the scope and applicability of the Safety Plan.
2. Identification of key staff responsible for the implementation and monitoring of the Contractor's Safety Plan, and their roles and responsibilities for safety.
3. Training requirements relative to safety.
4. Safety rules and checklists specific to the types of work generally performed by the Contractor.
5. Record-keeping and reporting requirements.
6. Identification of special hazards related to specific work elements.

The Contractor is responsible for the Safety Plan. Pursuant to Article 1.20-1.07.10, the Contractor shall indemnify, and save harmless the State from any and all liability related to any violation of the Safety Plan.

Under Article 1.20-1.08.06, the Engineer may suspend the work of the Contractor if and when the latter does not take the safety precautions referenced in this article. Nothing herein shall be construed, however, to relieve the Contractor from responsibility for the prosecution of the Project.

1.20-1.07.08—Facilities Construction - Use of Explosives: To the extent possible, the Contractor shall avoid using explosives in proximity to existing structures. When the use of explosives is necessary for the prosecution of the Project, the Contractor shall take the utmost care not to endanger life or property.

The Contractor shall take adequate protective measures when engaging in blasting operations, and shall be responsible for any damage resulting from such operations.

The Contractor shall notify each utility with facilities in proximity to the site of such blasting operations, and any other individuals and entities that may be affected thereby, of the Contractor's intention to use explosives; and such notice shall be given sufficiently in advance of any blasting to enable such affected parties to take steps to prevent such blasting from injuring persons or property. Such notice shall not relieve the Contractor of responsibility for damage resulting from its blasting operations.

1.20-1.07.09—Facilities Construction - Protection and Restoration of Property: The Contractor shall not enter upon private property for any purpose without having obtained written permission to do so from the owner of such property and having provided the Engineer with a copy of same. The Contractor shall use every reasonable precaution to avoid disturbing or damaging public or private property, including, but not limited to, trees and monuments. The Contractor shall use suitable precautions to avoid disturbing or damaging underground or overhead structures or facilities, whether or not they are shown on the plans.

If the Project requires the moving or removal of a land monument or property marker, the Contractor shall not disturb it until a duly-authorized agent of the public or private property's owner has witnessed or recorded the monument or marker's location. The

Contractor shall not move or remove such property until and unless directed to do so by the Engineer.

The Contractor shall not remove, cut, injure or destroy trees or shrubs without the Engineer's prior approval.

The Contractor shall be responsible for all damage to property resulting from any act, omission, neglect or misconduct in the Contractor's manner or method of executing its work, or due to its defective work or materials. When or where any direct or indirect damage is done to public or private property by or on account of any act, omission, neglect, or misconduct in the execution of the Project work, the Contractor shall restore, at its own expense, such property to a condition as close as possible to that which existed before such damage was done, by repairing, rebuilding or otherwise restoring the property, as may be directed by the Engineer; or the Contractor shall make good such damage in another manner acceptable to the Engineer. If the Contractor fails to restore such property or make good such damage in a way acceptable to the Engineer, the Engineer may, upon 48 hours' notice, proceed to have such property repaired, rebuilt or restored as he may deem necessary; and the cost thereof will be deducted from any monies due or which may become due the Contractor under the Contract or under any other contract(s) that the Contractor may have with the State.

The Engineer shall mark the locations of underground facilities belonging to the State when given 3 calendar days (excluding Saturdays, Sundays, and State holidays) notice by the Contractor that it will be excavating or driving material into the ground near such facilities as a part of necessary Contract work. After the Engineer marks the location of such facilities, it will be the Contractor's responsibility to maintain the location markers until no longer needed. Repairs of State facilities located further than 1 ft from the line delineated by such markers shall be paid for by the State.

1.20-1.07.10—Facilities Construction - Contractor's Duty to Indemnify the State against Claims for Injury or Damage: The Contractor shall indemnify and save harmless the State, the Department and all of its officers, employees and agents from all suits, actions or claims of any character, name or description brought for or on account of any injury or damage caused to any person or property as a result of, in connection with, or pursuant to the performance of the Contract, including all costs incurred by the State in defending itself against such claims or actions, in proportion to the extent that the Contractor is held liable for same by an arbiter of competent jurisdiction. As much of any money that may be due the Contractor under the Contract as the Commissioner considers necessary for the purpose of such indemnification or holding the State harmless may be retained for such use by the State; and the Contractor's surety bonds may be held until such suit or suits, action or actions, claim or claims, as aforesaid, shall have been settled and until the Contractor has furnished to the Commissioner suitable evidence to that effect. Such indemnity shall not be limited by reason of any insurance coverage required under the Contract.

1.20-1.07.11—Facilities Construction - Opening of Section of Project to Traffic or Occupancy: Whenever, in the opinion of the Engineer, any portion of the Project has been substantially completed, it may be opened to traffic or occupancy as directed by

the Engineer. The Engineer's approval of any such opening shall not be held to be in any way an acceptance of such completed portion of the Project, or as a waiver of any of the provisions of these Specifications, or of any state or federal statutes, applicable building codes, or other Contract provisions. Such approval shall not constitute a basis for claims for damages due to interruptions to, or interference with, the Contractor's operations.

If repair or replacement of any portion of the Project construction becomes necessary because the Engineer has directed that said portion be opened to travel or occupancy prior to completion of the Contract work, the Contractor shall perform that repair or replacement. The Contractor shall perform such work at its own expense, unless the Department or an arbiter of competent jurisdiction shall determine definitely that the damage necessitating the repair or replacement was caused by equipment operated by a State employee while controlling snow or ice, or by routine State maintenance operations. In the latter cases, the State shall reimburse the Contractor for the cost of the repair or replacement. If the damage was caused by a traffic accident involving only a vehicle or vehicles that were not owned by the State and were not operated by an agent of the State, the Contractor may seek recovery from the responsible parties, but not from the State.

1.20-1.07.12—Facilities Construction - Contractor's Responsibility for Work: From the date for commencement of construction given in the "Notice to Proceed" until the date when the Engineer relieves the Contractor of responsibility for the Project, the Project construction and site shall be under the charge and care of the Contractor; and the Contractor shall take every necessary precaution against damage to the same or any part thereof by the action of the elements or from any other cause, including either execution or non-execution of Project work. The Contractor shall rebuild, repair, restore or otherwise make good, at its own expense, all damage to, or impairment of, any portion or purpose of the Project which results from any of the above causes prior to completion of the Project, except as provided in Article 1.20-1.07.11.

1.20-1.07.13—Facilities Construction - Contractor's Responsibility for Adjacent Property, Facilities and Services: The Project work shall not commence until the Contractor has made all arrangements necessary to protect all property and facilities adjacent to the Project site, including, but not limited to, those of utilities, from damaging or disruptive effects of Project operations. The Contractor shall cooperate with the owners of any underground or overhead utility lines in their removal and rearrangement operations in order that these operations may progress in a reasonable manner, that duplication of such utilities work may be kept to a minimum, and that services rendered by those parties will not be unnecessarily interrupted.

In the event of interruption of water or utility services as a result of accidental breakage of facilities, or as a result of related facilities being exposed or unsupported, the Contractor shall promptly notify the proper utility and law enforcement authorities and the Engineer of same. The Contractor shall cooperate with said authorities in the restoration of such services as promptly as possible. In no case shall the Contractor

leave the site until the interrupted service has been restored. Fire hydrants shall be kept accessible at all times, and no materials shall be left within 15 ft of any fire hydrant.

1.20-1.07.14—Facilities Construction - Personal Liability of Representatives of the State: In carrying out any of the provisions of these Specifications, or in exercising any power or authority granted by the Contract, or by law or regulation, the Commissioner, Engineer, and their authorized representatives, including consultant engineering firms and their employees, shall be subject to no liability, either personally or as officials of the State, it being understood that in all such matters they act solely as agents and representatives of the State.

1.20-1.07.15—Facilities Construction - No Waiver of Legal Rights: The Commissioner reserves the right, should the Department discover an error in the estimate, or conclusive proof of defective work done or material used by or on behalf of the Contractor, either before or after the acceptance of the Contract, or even after the final payment has been made to the Contractor, to retain and apply monies owed to the Contractor under any State contract, or to claim and recover by process of law such sums, in order to correct any error or make good any defects in the Project work or materials.

1.20-1.07.16—Facilities Construction - Unauthorized Use of Area(s) Within the Project Site: The use of any area within the Project site for any purpose other than the construction of the Project, without prior written authorization to do so from the Commissioner, is prohibited.

Any request by the Contractor for authorization of such special use must include details describing the proposed use. If the proposed special use would involve the Contractor's making any lease or any profits in connection with the proposed use, the Contractor must enter into an agreement with the State for an equitable sharing of any profits with the State before such use may be authorized.

1.20-1.07.17—Facilities Construction - Vacant

1.20-1.07.18—Facilities Construction - Use of State Property: The Contractor may not use State property for any purpose or activity other than carrying out the construction activities required by the Contract, except with the prior written consent of the Engineer.

Such other activities, which require the Engineer's advance consent, include, but are not limited to, the establishment of staging areas, storage areas, asphalt plants, concrete plants, or gravel/borrow pits; or the conduct of screening, crushing, manufacturing, or mining operations.

Any permitted use of the Project site or other State property for such other purposes or activities must be for the performance of the specific Contract only, and must be at no cost to the State. In addition, the Contractor may not assert or bring any claim or formal proceeding for damages or additional compensation based on either the approval or denial of a request to make such use of the Project site or other State property.

Under no circumstances shall the bulk storage of fuel or lubricants by the Contractor or its agents be permitted on State property. Nor shall the Contractor store any hazardous materials on State property other than those that are integral to the Contractor's performance of the Contract, as allowed by the Contract or in writing from the Engineer. The Contractor shall have the responsibility and duty to ensure the proper storage, handling, management and disposal of any such hazardous materials. The Contractor shall be liable to the Department for all remedial or punitive costs, damages or penalties incurred by the Department as a result of the Contractor's failure to fulfill this duty.

The Engineer may require environmental testing of the affected site at the Contractor's expense both prior to and upon completion of the Contractor's permitted use of the site or of other related State property. The Contractor shall be responsible for ensuring that such a site is restored to the condition required by the Engineer and that all contaminants deposited on the site by the Contractor or its agents are removed and properly disposed of. All such restoration and removal activities must be carried out at the Contractor's expense, and must be carried out in accordance with the provisions of the Department's Best Management Practices, any applicable environmental permits, and all other applicable State or Federal laws or regulations.

The Contractor must submit any request to use State property for a staging or storage area to the District Engineer at the District Construction Office. The following information, at a minimum, must accompany such written request:

(a) A detailed description of the proposed operation or use of State property.

(b) A site plan detailing the proposed location of any operations, materials, or facilities related to the requested use, including any appropriate sedimentation or erosion controls.

(c) An area plan detailing anticipated ingress to and egress from the site of the proposed activity or the Project site, as appropriate, and indicating the location of and proximity to residential or occupied buildings in the vicinity.

(d) Copies of any related, required or affected environmental permits.

(e) A detailed listing or description of the anticipated dates and hours of the proposed operations or activities.

(f) Photo documentation (a minimum of twelve 8x10-in. color photographs) (i) of the preconstruction condition of each site of the proposed activities and (ii) of adjacent property at the boundaries of those areas. If the site to be used or affected is State property that lies outside of any Department right-of-way, the Contractor must also obtain from other State agencies all necessary or appropriate authorizations for the proposed use(s) of State property.

Any request by the Contractor relating to a proposed use of State property for activities other than the establishment of a construction staging or storage area must also be submitted to the District Engineer at the District Construction Office, and must include the same information required by (a) through (f) of the preceding paragraph. In addition, in connection with such other requests, the Contractor must submit to the District Engineer:

(g) written confirmation from the municipality or municipalities in which each affected site is located that such municipality has no objection to the proposed use or activity; and

(h) a license agreement with the Department, executed by the Contractor, on terms acceptable to the Department, defining the nature and scope of the proposed use or activity.

Gore areas are not available for disposal of surplus material.

For any request to establish or operate an asphalt batching or continuous mix facility, the Contractor must also provide to the District Engineer at the District Construction Office a map detailing the outermost perimeter of the proposed facilities and operations, showing all related and potentially-affected structures, land uses, watercourses, wetlands, and other areas of environmental concern within 1/3 of a mile of the facility or operation perimeter. No such facility will be permitted on State property where any hospital, nursing home, school, area of environmental concern, watercourse, or residential housing exists within 1/3 of a mile of the perimeter of the facility or operation (as per Public Act 98-216).

SECTION 1.20-1.08
PROSECUTION AND PROGRESS FOR FACILITIES CONSTRUCTION

1.20-1.08.01—Facilities Construction - Transfer of Work or Contract
1.20-1.08.02—Facilities Construction - Establishment of Construction Field Office
1.20-1.08.03—Facilities Construction - Prosecution of Work
1.20-1.08.04—Facilities Construction - Limitation of Operations
1.20-1.08.05—Facilities Construction - Personnel and Equipment
1.20-1.08.06—Facilities Construction - Suspensions of Work Ordered by the Engineer
1.20-1.08.07—Facilities Construction - Determination of Contract Time
1.20-1.08.08—Facilities Construction - Extension of Time
1.20-1.08.09—Facilities Construction - Failure to Complete Work on Time
1.20-1.08.10—Facilities Construction - Annulment of Contract
1.20-1.08.11—Facilities Construction - Final Cleaning Up
1.20-1.08.12—Facilities Construction - Semi-Final, Substantial Completion, and Final Completion Inspections
1.20-1.08.13—Facilities Construction - Termination of the Contractor's Responsibility
1.20-1.08.14—Facilities Construction - Acceptance of Project

1.20-1.08.01—Facilities Construction - Transfer of Work or Contract: The Contractor shall perform with its own organization Contract work with a value under the Contract of at least 25% of the original total Contract value. If the Contractor sublets, sells, transfers, or otherwise disposes of any part of the Contract work without the Commissioner's prior written consent, the Contractor will not be relieved of any Contractual or other legal responsibility in connection therewith. Such an unauthorized act by the Contractor shall constitute a material breach of the Contract, and the Commissioner may, in such a case, terminate the Contract without further compensation to the Contractor.

The Contractor shall include the following alternative dispute resolution clause in all of its Project subcontracts:
"For any dispute arising out of the agreement between the Contractor and a subcontractor, including claims of late payment or non-payment, which cannot be settled within 60 days of the subcontractor submitting a written claim to the Contractor, either party may bring the dispute before an alternative dispute resolution entity for resolution. If the parties do not agree upon a particular dispute resolution entity for that purpose, the dispute shall be resolved under the auspices and construction arbitration rules of the American Arbitration Association, or under the rules of any other alternative dispute resolution entity approved by the Department either generally or for the specific dispute. The Department may not be made a party to formal arbitration regarding such a dispute. These rights and restrictions may not be waived, and if these provisions are not included in the Contractor's subcontracts for the Project, these provisions shall nonetheless be read into them."

The Contractor shall not knowingly enter into any lower-tier transaction on a Department project with any person or entity which, under any federal or state law or regulation, or by voluntary agreement, is currently debarred or disqualified from bidding for construction contracts or participating in construction projects in any jurisdiction within the United States, unless after disclosure of such ineligibility, such participation is authorized by appropriate federal and State authorities, including the Commissioner.

The Contractor shall not sublet, sell, transfer, assign, or otherwise dispose of the Contract or any portion thereof, or of the work provided for therein, or of its right, title, or interest therein, to any individual or entity without the written consent of the Commissioner. No payment will be made for such work until written consent is provided by the Commissioner.

The Contractor shall pay the subcontractor for work performed within thirty (30) days after the Contractor receives payment for the work performed by the subcontractor. Withholding retainage by the Contractor, subcontractor or lower tier subcontractors is not allowed.

Payment for work that has been performed by a subcontractor does not eliminate the Contractor’s responsibilities for all the work as defined in Article 1.20-1.07.12, “Contractor’s Responsibility for Work.”

Payment for work that has been performed by a subcontractor also does not release the subcontractor from its responsibility for maintenance and other periods of subcontractor responsibility specified for the subcontractor’s items of work. Failure of a subcontractor to meet its maintenance, warranty or defective work responsibilities may result in administrative action on future Department contracts.

For any dispute regarding prompt payment, the alternate dispute resolution provisions of this article shall apply.

The above requirements are also applicable to all sub-tier subcontractors and the above provisions shall be made a part of all subcontract agreements.

Failure of the Contractor to comply with the provisions of this section may result in a finding that the Contractor is non-responsible as a bidder for a Department contract.

1.20-1.08.02—Facilities Construction - Establishment of Construction Field Office: Prior to the start of Project construction, and within 10 calendar days after the signing of the Contract by the parties, the Contractor shall propose in writing to the Engineer a field office location. The proposal shall include the office telephone number to be used, the nearest utility pole number, and the distance from that pole to the proposed field office. The office shall be made acceptable to the Engineer and available for use, including all utility hookups, local permits and inspections, within 30 days of the Engineer's order to establish the office. Such order shall not be deemed the "Notice to Proceed."

The Contractor shall purchase one set of all building and fire codes listed in Article 1.20-1.02.13 for the Engineer's use. If any codes are not readily available, the Contractor shall provide the Engineer with a copy of the code order form along with an anticipated delivery date. At the end of the Project, the codes will remain the property of the Engineer.

1.20-1.08.03—Facilities Construction - Prosecution of Work:

1. General: The Contractor shall commence construction operations with that part of the Project designated for such commencement in the progress schedule which it has submitted to the Department, unless the Engineer directs the Contractor to commence with a different part of the Project. The work shall be conducted in such manner and with sufficient materials, equipment and labor as are necessary to ensure completion of the Project in accordance with the Contract within the time set forth in the Contract. The Contractor shall notify the Engineer of its intention to commence or recommence any Project operation at least 48 hours in advance of doing so. The Contractor shall also give the Engineer such advance notice of any intent to discontinue any Project operation, unless emergency conditions make it impracticable to give such notice so far in advance. The Engineer retains the right to disallow such commencement, recommencement or discontinuance of operations.

2. Permanent Utilities: The Contractor shall place all permanent utility services in its name until the requirements of Subarticle 1.20-1.08.13-1 are met.

3. Temporary Utilities, Services, and Facilities: All utility usage charges for the Project site for Project construction are the responsibility of the Contractor except as may be provided by the Contract. The Contractor shall place all temporary utility services in its name. Installation or use charges for temporary facilities are not chargeable to the State, and may not be used as a basis for construction orders.

The Contractor shall:

(a) Submit to the Engineer a schedule indicating the Contractor's plan for implementation and termination of each temporary utility within 21 calendar days of the Notice to Proceed.

(b) Obtain required certifications and permits for temporary utilities and submit copies of same to the Engineer as soon as each is obtained.

(c) Arrange for authorities having relevant jurisdiction to inspect and test each temporary utility before use, and after any relocation of same.

(d) Use qualified personnel for installation of temporary facilities, including subsequent relocations.

(e) Install such facilities in locations where they will serve the Project adequately and result in minimum interference with performance of the Project.

(f) Engage the appropriate utility company to install temporary service or connect to existing service. If such company provides only part of the service, the Contractor shall provide the remainder with matching, compatible materials and equipment and shall comply with the company recommendations and arrange with the company and the Engineer for a time when service may be interrupted, if necessary, to make connections for temporary services.

(g) Provide adequate utility capacity at each stage of Project construction.

(h) Prior to temporary utility availability, the Contractor shall provide trucked-in services. The Contractor shall obtain easements to bring temporary utilities to the site, where easements cannot be used for that purpose.

(i) Provide weatherproof, grounded electric power service and distribution system of sufficient size, capacity, and power characteristics during Project construction. The Contractor shall include meters, transformers, overload-protected disconnects, automatic ground-fault interrupters and main distribution switch-gear and shall install underground electric power service, except where overhead service must be used, or the Engineer directs it.

Whenever the Contractor installs an overhead floor or roof deck, the Contractor shall provide temporary lighting with local switching. The Contractor shall provide temporary lighting that will fulfill security and protection requirements, that will be adequate for construction operations and traffic conditions, and that will render signs on the Project site visible when Project work is being performed for the duration of the Project.

The Contractor shall provide temporary heat required for curing or drying activities, for protection of installed construction from adverse effects of low temperatures or high humidity, or for heating of interior building areas. The Contractor shall use safe equipment that will not have a harmful effect on elements being installed or on completed installations. The Contractor shall coordinate ventilation and temporary heating so as to produce the ambient condition required and to minimize consumption of energy. All temporary heating must comply with OSHA regulations and other applicable codes, statutes, rules and regulations. The Contractor shall bear the costs related to furnishing temporary heat as herein required, including the cost of energy.

Except when use of the permanent heating system is authorized by the Engineer, the Contractor shall provide vented, self-contained LP-gas or fuel oil heaters with individual-space thermostatic control. Use of gasoline-burning space heaters, open flame, or salamander type heating units are prohibited.

The Contractor shall install water service and distribution piping of sizes and pressures adequate for Project construction until permanent water service is in use. The Contractor shall sterilize temporary water piping prior to use.

The Contractor shall collect waste daily from the Project Site. The Contractor shall comply with requirements of NFPA 241 for removal of combustible waste material and debris. The Contractor shall not hold such materials more than 7 calendar days during normal weather or 3 calendar days when the temperature is expected to rise above 80° F. The Contractor shall handle hazardous, dangerous, or unsanitary waste materials separately from other waste by placing them in proper containers. The

Contractor shall dispose of material in a lawful manner.

The Contractor shall remove each temporary facility as authorized by the Engineer. Materials and facilities that constitute temporary facilities are the Contractor's property, unless otherwise noted in the Contract.

4. Cutting and Patching:

A. Approval Process: Well in advance of performing any cutting and patching on the Project, the Contractor shall submit to the Engineer a proposal describing the procedures that the Contractor intends to use for same.

The Contractor shall include the following information, as applicable, in the proposal:

(1) Description of the extent of cutting and patching required, how it will be performed, and an indication as to why it cannot be avoided;

(2) Changes in structural elements, operating components, and the building's appearance and other significant visual elements;

(3) List of products to be used and firms or entities that will perform Project work;

(4) Dates when cutting and patching are to be performed;

(5) List of utilities that cutting and patching procedures will affect, list of utilities that will be relocated, and list of utilities that will be temporarily rendered out of service (including duration);

(6) Where cutting and patching involves adding reinforcement to structural elements and is required due to the fault of the Contractor, details and engineering calculations prepared by a Professional Engineer registered in the State of Connecticut to show integration of reinforcement with the original structure; if such is not due to fault of the Contractor, the Designer shall supply details to show integration of reinforcement with the original structure.

Approval by the Engineer to proceed with cutting and patching does not waive the Engineer's right to later require complete removal and replacement of unsatisfactory work.

B. Protection:

(1) Structural Elements: The Contractor shall obtain approval of the cutting and patching proposal before cutting and patching any structural element, including but not limited to structural concrete, structural steel, timber and primary wood framing, and structural decking.

The Contractor shall not cut and patch structural elements in a manner that would reduce their load-carrying capacity or load-deflection ratio; or cut and patch operating elements or related components in a manner that would reduce their capacity to perform as intended, increase maintenance needs, or decrease operational life or safety.

(2) Operational Elements: The Contractor shall not cut and patch operating elements and related components in a manner that results in their reducing their capacity to perform as intended or that results in increased maintenance or decreased operational life or safety.

(3) Other Construction Elements: The Contractor shall not cut and patch miscellaneous elements or related components in a manner that could change their load-carrying capacity, that results reducing their capacity to perform as intended, or that results in increased maintenance or decreased operational life or safety.

C. Protection of Visual Elements: The Contractor shall not cut and patch construction exposed on the exterior or in occupied spaces in a manner that would, in the Engineer's opinion, reduce the building's aesthetic qualities; or cut and patch construction in a manner that would result in visual evidence of cutting and patching. The Contractor shall remove and replace any such unsatisfactory work.

If possible, the Contractor shall retain the original installer or fabricator to cut and patch exposed work. If it is impossible to engage the original installer or fabricator, the Contractor shall engage another firm acceptable to the Engineer.

D. Warranty: When replacing, patching, or repairing material or surfaces that have been cut or damaged, the Contractor shall use methods and materials in such a manner as not to void any required or existing warranties.

E. Materials: To the extent possible, the Contractor shall use materials identical to existing materials. For exposed surfaces, the Contractor shall use materials that visually match adjacent surfaces to the fullest extent possible. The Contractor shall use materials whose performance will equal or surpass that of existing materials.

F. Coordination: Before proceeding with any cutting and patching, the Contractor shall meet at the Project site with parties that will be involved in that work, including the Engineer and mechanical and electrical subcontractors, to review and resolve areas of potential interference and conflicts.

G. Preparation: The Contractor shall

(1) provide temporary support of work to be cut;
(2) protect existing construction during cutting and patching;
(3) protect such construction from adverse weather conditions where it may be exposed during cutting and patching operations; and
(4) avoid interference with use of adjoining areas or interruption of free passage to adjoining areas.

The Contractor shall avoid cutting existing pipe, conduit, or ductwork which serves the building, but which is scheduled to be removed or relocated, until adequate to bypass, replace, or discontinue those services, as applicable.

H. Performance: The Contractor shall:

(1) employ skilled workers to perform cutting and patching;
(2) proceed with cutting and patching at the earliest feasible time, and complete the work without delay;
(3) cut existing construction to provide for installation of other components or performance of other construction activities and the subsequent fitting and patching required for restoring surfaces to their original condition;
(4) cut existing construction using methods least likely to damage elements retained or adjoining construction; and
(5) review proposed procedures with the original installer and comply with the original installer's recommendations, if possible.

In general, for cutting and patching the Contractor shall:

(1) use hand or small power tools designed for sawing or grinding, not for hammering and chopping;
(2) cut holes and slots neatly to the size required, and with minimum disturbance of adjacent surfaces;

(3) temporarily cover openings when not in use;
(4) cut or drill from the exposed or finished side into concealed surfaces to avoid marring existing finished surfaces;
(5) cut through concrete and masonry using a cutting machine such as a carborundum-saw or diamond-core drill; and
(6) review any Contract provisions applicable to cutting and patching which requires excavating and backfilling.

Where services are required to be removed, relocated or abandoned, the Contractor shall:

(1) by-pass utility services such as pipe or conduit, before cutting;
(2) cut-off pipe or conduit in walls or partitions to be removed; and
(3) cap, valve, or plug and seal the remaining portion of pipe or conduit to prevent entrance of moisture or other foreign matter after bypassing and cutting.

The Contractor shall:

(1) patch with durable seams that are as invisible as possible;
(2) comply with specified tolerances;
(3) inspect patched areas to ensure integrity of the installation where feasible; and
(4) restore exposed finishes of patched areas and extend finish restoration into retained adjoining construction in a manner that will eliminate evidence of patching and refinishing.

Where removal of walls or partitions extends one finished area into another, the Contractor shall:

(1) patch and repair floor and wall surfaces in the new space;
(2) provide an even surface of uniform color and appearance;
(3) remove existing floor and wall coverings and replace with new materials, if necessary to achieve uniform color and appearance; and
(4) patch, repair or re-hang existing ceilings as necessary to provide an even plane surface of uniform appearance.

Where patching occurs in a smooth painted surface, the Contractor shall extend final paint coat over entire unbroken surface containing the patch, after the patched area has received primer and second coat.

I. Cleaning: The Contractor shall:

(1) clean areas and spaces where cutting and patching are performed or used as access;
(2) remove paint, mortar, oils, putty and similar items;
(3) clean piping, conduit, and similar features before applying paint or other finishing materials; and
(4) restore damaged pipe covering to its original condition.

5. Selective Demolition:

A. Definitions:

Remove: The Contractor shall detach materials from existing construction and legally dispose or recycle them off-site, unless indicated to be removed and salvaged or removed and reinstalled. Except for materials indicated to be reused, salvaged, reinstalled, or otherwise indicated to remain Engineer's property, demolished materials shall become Contractor’s property and shall be removed from the Project Site.

Remove and Salvage: The Contractor shall detach materials from existing construction and deliver them to Engineer. The Engineer reserves the right to identify other materials for salvage during the course of demolition.

Remove and Reinstall: The Contractor shall detach materials from existing construction, prepare them for reuse, and reinstall them where indicated.

Existing to Remain: Existing materials of construction that are not to be removed and that are not otherwise indicated to be removed, removed and salvaged, or removed and reinstalled.

B. Approval Process:

The Contractor shall submit pre-demolition photographs to the Engineer prior to the commencement of Project work to show existing conditions of adjoining construction and site improvements, including finish surfaces, that might be misconstrued as damage caused by selective demolition operations.

Well in advance of performing any selective demolition on the Project, the Contractor shall submit to the Engineer a proposal describing the procedures that the Contractor intends to use for same.

The Contractor shall include the following information, as applicable, in its proposal:

(1) detailed sequence of selective demolition and removal work with starting and ending dates for each activity while ensuring that the Engineer's on-site operations are not disrupted;
(2) interruption of utility services;
(3) coordination for shutoff, capping, and continuation of utility services;
(4) use of elevators and stairs;
(5) locations of temporary partitions and means of egress;
(6) coordination of Engineer's continuing occupancy of portions of existing building and of Engineer's partial occupancy of completed Project work; and
(7) means of protection for items to remain and items in path of waste removal from building.

The Contractor shall comply with

(1) governing EPA notification regulations before beginning selective demolition;
(2) hauling and disposal regulations of authorities having jurisdiction;
(3) ANSI A10.6; and
(4) NFPA 241.

The Engineer will conduct a Pre-Demolition Meeting at the Project site in accordance with Article 1.20-1.05.24. Said meeting will review the methods and procedures related to selective demolition including, but not limited to, the following:

(1) an inspection and discussion of the condition of construction to be selectively demolished;
(2) a review of the structural load limitations of the existing structure;
(3) a review and finalization of the selective demolition schedule and a verification of the availability of materials, demolition personnel, equipment, and facilities needed to make progress and avoid delays;
(4) a review of requirements of Project work performed by other trades that rely on substrates exposed by selective demolition operations; and
(5) a review of areas where existing construction is to remain and requires protection.

C. Repair Materials:

The Contractor shall comply with Subarticle 1.20-1.08.03-4E for repair materials and shall comply with material and installation requirements specified in other Contract provisions.

D. Examination:

The Contractor shall:

(1) verify that utilities have been disconnected and capped;
(2) survey existing conditions and correlate with requirements indicated to determine extent of selective demolition required;
(3) inventory and record the condition of items to be removed and reinstalled and items to be removed and salvaged;
(4) investigate and measure the nature and extent of unanticipated mechanical, electrical, or structural elements that conflict with intended function or design and submit a written report to Engineer; and
(5) perform surveys as the Project work progresses to detect hazards resulting from selective demolition activities.

E. Utility Services:

The Contractor shall:

(1) maintain existing utility services indicated to remain and protect them against damage during selective demolition operations;
(2) not interrupt existing utilities serving occupied or operating facilities unless authorized in writing by the Engineer;
(3) provide temporary services during interruptions to existing utilities, as acceptable to Engineer;
(4) provide at least 3 calendar days' notice to the Engineer if shutdown of service is required during changeover; and
(5) locate, identify, disconnect, and seal or cap off indicated utilities serving areas to be selectively demolished.

The Contractor shall arrange to shut off indicated utilities with utility companies. If utility services are required to be removed, relocated, or abandoned, before proceeding with selective demolition the Contractor shall provide temporary utilities that bypass area of selective demolition and that maintain continuity of service to other parts of building. The Contractor shall cut off pipe or conduit in walls or partitions to be removed and shall cap, valve, or plug and seal remaining portion of pipe or conduit after bypassing.

The Contractor shall refer to other Contract provisions for shutting off, disconnecting, removing, and sealing or capping utilities. The Contractor shall not start selective demolition work until utility disconnecting and sealing have been completed and verified by the Engineer in writing.

F. Preparation:

The Contractor shall conduct selective demolition and debris-removal operations to ensure minimum interference with adjacent occupied and used facilities on the Project site. The Contractor shall not disrupt the Owner's operations without the Engineer's permission. The Contractor shall protect existing site improvements, appurtenances, and landscaping to remain.

The Contractor shall provide temporary barricades and other protection required to prevent injury to people and damage to adjacent buildings and facilities to remain. The Contractor shall provide temporary weather protection, during interval between selective demolition of existing construction on exterior surfaces and new construction, to prevent water leakage and damage to structure and interior areas. The Contractor shall protect walls, ceilings, floors, and other existing finish work that are to remain or that are exposed during selective demolition operations. The Contractor shall cover and protect furniture, furnishings, and equipment that have not been removed.

The Contractor shall provide temporary enclosures for protection of existing building and construction, in progress and completed, from exposure, foul weather, other construction operations, and similar activities. The Contractor shall provide temporary weathertight enclosure for building exterior. Where heating is needed and permanent enclosure is not complete, the Contractor shall provide insulated temporary enclosures and shall coordinate enclosure with ventilating and material drying or curing requirements to avoid dangerous conditions and effects.

The Contractor shall erect and maintain dustproof partitions and temporary enclosures to limit dust and dirt migration and to separate areas from fumes and noise.

The Contractor shall provide and maintain interior and exterior shoring, bracing, or structural support to preserve stability and prevent movement, settlement, or collapse of construction to remain, and to prevent unexpected or uncontrolled movement or collapse of construction being demolished. The Contractor shall strengthen or add new supports when required during progress of selective demolition.

G. Pollution Controls:

The Contractor shall comply with governing regulations pertaining to environmental protection.

The Contractor shall not use water when it may create a hazardous or objectionable condition such as ice, flooding, or pollution.

The Contractor shall remove and transport debris in a manner that will prevent spillage on adjacent surfaces and areas. The Contractor shall remove debris from elevated portions of building by chute, hoist, or other device that will convey debris to grade level in a controlled descent.

The Contractor shall clean adjacent structures and improvements of dust, dirt, and debris caused by selective demolition operations. The Contractor shall return adjacent areas to condition existing before selective demolition operations began.

H. Performance:

The Contractor shall not use explosives for demolition purposes.

The Contractor shall demolish and remove existing construction only to the extent required by new construction and as indicated. The Contractor shall:

(1) proceed with selective demolition systematically;
(2) neatly cut openings and holes plumb, square, and true to dimensions required;
(3) use cutting methods least likely to damage remaining or adjoining construction;
(4) use hand tools or small power tools designed for sawing or grinding, not hammering and chopping, to minimize disturbance of adjacent surfaces;
(5) temporarily cover openings to remain;
(6) cut or drill from the exposed or finished side into concealed surfaces to avoid marring existing finished surfaces;

(7) not use cutting torches until work area is cleared of flammable materials;
(8) verify condition and contents of concealed spaces such as duct and pipe interiors before starting flame-cutting operations;
(9) maintain fire watch and portable fire-suppression devices during flame-cutting operations;
(10) maintain adequate ventilation when using cutting torches;
(11) remove decayed, vermin-infested, or otherwise dangerous or unsuitable materials and promptly dispose of off-site;
(12) remove structural framing members and lower to ground by method suitable to avoid free fall and to prevent ground impact or dust generation;
(13) locate selective demolition equipment and remove debris and materials so as not to impose excessive loads on supporting walls, floors, or framing; and
(14) dispose of demolished items and materials promptly.

The Contractor shall comply with the Engineer's requirements for using and protecting walkways, building entries, and other building facilities during selective demolition operations.

The Contractor shall demolish and remove foundations and other below grade structures completely unless otherwise indicated on the plans. The Contractor shall fill below grade areas and voids resulting from demolition of structures with granular fill materials. Prior to placement of fill materials, the Contractor shall ensure that the areas to be filled are free of standing water, frost, frozen material, trash, and debris. After fill placement and compaction, grade surface to meet adjacent contours and provide flow to surface drainage structures. Backfilling and grading related to demolition is included in the Major Lump Sum Item (MLSI) for the Project. There will be no separate payment for this backfilling and grading.

The Contractor shall (1) demolish concrete in sections; (2) cut concrete at junctures with construction to remain to the depth shown on the Contract plans and at regular intervals using power-driven saw; and (3) remove concrete between saw cuts.

The Contractor shall:
(1) demolish masonry in small sections;
(2) cut masonry at junctures with construction to remain using power-driven saw; and
(3) remove masonry between saw cuts.

The Contractor shall:
(1) saw-cut perimeter of concrete slabs-on-grade to be demolished as shown on the Contract plans; and
(2) break up and remove concrete slabs-on-grade.

The Contractor shall;
(1) remove floor coverings and adhesive according to recommendations in RFCI-WP and its Addendum; and
(2) remove residual adhesive and prepare substrate for new floor coverings by one of the methods recommended by RFCI.

The Contractor shall:
(1) only remove existing roofing in one day to the extent that it can be covered by new roofing; and

(2) refer to other Contract provisions for new roofing requirements.

The Contractor shall remove air conditioning equipment without releasing refrigerants.

I. Reuse of Building Elements:

The Contractor shall not demolish building elements beyond what is indicated on the plans without the Engineer's approval.

J. Removed and Salvaged Materials:

Unless otherwise directed by the Engineer, the Contractor shall:

(1) store materials in a secure area until delivery to the Owner;
(2) transport materials to the Owner's storage area off-site; and
(3) protect materials from damage during transport and storage.

K. Removed and Reinstalled Materials:

Unless otherwise directed by the Engineer, the Contractor shall:

(1) clean and repair materials to functional condition adequate for intended reuse;
(2) paint equipment to match the color of new equipment;
(3) protect materials from damage during transport and storage; and
(4) reinstall items in locations indicated complying with installation requirements for new materials and equipment and providing connections, supports, and miscellaneous materials necessary to make item functional for use indicated.

L. Existing Materials to Remain:

The Contractor shall protect construction indicated to remain against damage and soiling during selective demolition.

The Contractor shall drain piping and cap or plug piping with the same or a compatible piping material for piping to be abandoned in place.

The Contractor shall cap or plug ducts with the same or a compatible ductwork material for ducts to be abandoned in place.

The Contractor shall cut and remove concealed conduits and wiring to be abandoned in place 2-in below the surface of the adjacent construction, cap the conduit end, and patch the surface to match the existing finish. The Contractor shall cut existing conduits installed in concrete slabs to be abandoned in place flush with the top of the slab and fill conduit end with a minimum of 4-in of concrete.

M. Patching and Repairing:

The Contractor shall comply with Subarticle 1.20-1.08.03-4H for patching and repairing damage to adjacent construction caused by selective demolition operations.

N. Disposal of Demolished Materials:

The Contractor shall:

(1) not allow demolished materials to accumulate or be sold on the Project Site;
(2) not burn demolished materials on the Project Site; and
(3) promptly and legally dispose or recycle demolished materials off the Project Site.

1.20-1.08.04—Facilities Construction - Limitation of Operations: The Contractor shall plan and perform the Project work in such a manner and in such sequence as will cause as little interference as is practicable with vehicular, railroad, aircraft, pedestrian or other traffic. The Contractor shall cooperate with any utilities involved in or affected by the Project operations, and shall schedule its operations in accordance with Article 1.20-1.05.06.

The Contractor shall give the Engineer 7 days' advance written notice of any proposed changes in Project activities that will alter vehicular traffic patterns, causing lane shifts, detours, temporary closure of a lane, permanent closure of a lane or lane reductions, or any other alteration of railroad, aircraft, pedestrian or other traffic patterns affecting usage of such a transportation facility by the traveling public. This advance notification will allow the Department to publish news releases and provide public radio announcements to inform the public of revised traffic patterns or possible traffic delays. Failure of the Contractor to provide such timely notice will subject the Contractor to stop work orders until such time as the 7 days of required notice have run from either the Contractor's giving of the relevant notice or the Department's discovery of the pertinent alteration of traffic conditions.

1.20-1.08.05—Facilities Construction - Personnel and Equipment: The Contractor shall assign to the Project only personnel who are careful and competent. The Engineer may demand the removal of any person employed by the Contractor on the Project who is, in the opinion of the Engineer, guilty of misconduct on a Department project or incompetent or negligent in the performance of his duties on a Department project or any portion thereof, or who neglects or refuses to comply with directions given by the Engineer in connection with the Project. Following such a demand for his removal, such person shall not work again on the Project without the prior written consent of the Engineer. Should the Contractor, following such a demand for removal, continue to employ or again employ such person on any Department project without the required consent of the Engineer, the Commissioner may withhold all estimated payments that are or may become due to the Contractor for the Project, or the Engineer may shut down the Project until the Contractor has complied with the Engineer's orders concerning that person. The use of convict labor on projects funded in whole or in part by the federal government is prohibited.

The Contractor shall furnish whatever equipment is necessary for the Project to be performed in a manner and at a rate of progress that is acceptable to the Engineer. Equipment used on any portion of the Project shall not be used in any way that may cause injury to the roadway, adjacent property, or other property on or adjacent to the Project Site, unless such damage is allowed by the Engineer for the performance of the Project.

The Contractor may submit to the Engineer a request to use equipment or methods other than those specified in the Contract. If the Engineer so directs, there shall be a trial of such equipment or methods. If the results of the trial are satisfactory to the Engineer, the Contractor may begin using the proposed equipment or method on the Project. Failure of the equipment or method to meet the specified Contract performance standards in the course of the specified trial, or, in the absence of such standards, a failure to perform to the satisfaction of the Engineer, shall be cause for rejection of any such method or equipment, and any work performed with either. Such rejected equipment or work shall be removed immediately from the Project site.

The Contractor shall provide:

(a) Temporary heating units that have been tested and labeled by UL, FMG or another recognized trade association related to the type of fuel being consumed.

(b) Hand-carried, portable, UL-rated, Class ABC, dry-chemical extinguishers or a combination of extinguishers of NFPA recommended classes that comply with NFPA 10 and 241 for classification, extinguishing agent, and size required by location and class of fire exposure.

(c) The Contractor shall install a filter with a minimum MERV rating of 10 at each return air grille in the permanent HVAC system if the Engineer authorizes the use of the permanent HVAC system for temporary use during construction. The Contractor shall remove the filters prior to the Semi-Final Inspection.

1.20-1.08.06—Facilities Construction - Suspensions of Work Ordered by the Engineer: The Engineer may suspend the Project wholly or in part, for such period or periods as he considers to be in the best interests of the State, including, but not limited to, the interests of public necessity, convenience, or safety.

During such periods of suspension, and subject to any related directions from the Engineer, the Contractor shall store all materials and equipment in a way that will keep them from obstructing or impeding the traveling public unnecessarily, and that will keep the materials from being damaged; shall take all reasonable measures to prevent damage to the work performed; shall provide suitable drainage of the roadway and Project site by opening ditches, shoulder drains, etc., as appropriate; and shall erect temporary structures to prevent damage to the Project or to other property, and to protect the public, where and when necessary.

The Contractor shall maintain the Project site and all roadways and buildings thereon in a condition safe for travel or occupancy, and shall maintain all required barricades, signs, and lights during the period of suspension:

(1) If the Engineer orders in writing that performance of all or any portion of the Project shall be suspended, or that it shall be delayed for an unreasonable period of time (not customary, within the scope of possibilities that an experienced contractor should know might occur on a construction project, or inherent in the nature of construction activities), and if the Contractor believes that additional compensation or Contract time is due to it as a result of such suspension or delay, the Contractor shall submit to the Engineer in writing a request for a related Contract adjustment within 7 calendar days of the Contractor's receipt of a direction from the Engineer to resume work. The request shall set forth the specific reasons and support for the requested adjustment.

(2) Upon receipt of the Contractor's request, the Engineer will evaluate the request. If the Engineer agrees that the expenditures or time required for the Contractor's performance of the Contract have increased as a result of such suspension or delay, and if the suspension or delay was caused by conditions beyond the control of and not the fault of the Contractor, its suppliers, or subcontractors at any approved tier, and was not caused by weather, the Engineer will make an appropriate adjustment (excluding any profit) of the written terms of the Contract. The Engineer will give the Contractor written notice of his determination as to whether or not the requested adjustment of the Contract is warranted and will be made.

(3) No Contract adjustment will be made unless the Contractor has submitted the request for adjustment within the time prescribed.

(4) In addition to the other limits and requirements imposed by this article, no Contract adjustment will be allowed under this article to the extent

(a) that the Project work would have been suspended or delayed by any cause other than the ones identified in the Contractor's request, or

(b) that the requested adjustment or type of adjustment is provided for or barred by another provision of the Contract.

(With regard to Items 1-4, refer to 23 CFR, Section 635.109, "Standardized Changed Condition Clauses," Required FHWA Contract Specification.)

1.20-1.08.07—Facilities Construction - Determination of Contract Time: Unless the Contract requires the Project completion by a specified date, the number of calendar days allowed for the completion of the Project will be fixed by the Department, will be stated in the Contract, and will be known (with any subsequent adjustments) as the "Contract time." If at any time the Contractor submits a schedule showing completion of the work more than 30 calendar days in advance of the Contract completion date, the Department will issue a no-cost construction order revising the allowable Contract time to that shown on the Contractor's schedule.

When the Contract time is stated on a calendar-day basis, that time shall be the number of consecutive calendar days contained in the Contract period designated in the Contract, INCLUDING the time period from each December 1 through the following March 31. The Contract time will begin to run on the date designated in the Engineer's "Notice to Proceed" as the date for commencement of the Project, and the time will be computed as herein provided on a consecutive-day basis, including all Saturdays, Sundays, holidays, and non-work days.

The total elapsed time in calendar days, computed as described above, from the commencement date specified in the Engineer's "Notice to Proceed" to the "Substantial Completion" date specified in the Engineer's "Notice of Substantial Completion" shall be considered as the time used in the performance of the Contract work.

Suspension involving cessation of work on all items, except minor construction not affected by or connected with the cause of suspension, shall be considered as total suspension. In case of a total suspension of the Project ordered by the Engineer, not due to any fault of the Contractor, the elapsed time during which the Project is suspended will not be charged against the Contract time. Work of an emergency nature ordered by the Engineer for the convenience or safety of the public or the protection of the Project work, if performed during a period of total suspension, will not be charged against Contract time. No such time allowance will be granted in case of partial suspension; provided, however, that the Contractor may request and the Engineer may grant permission to perform specific limited operations during such a partial suspension, in which case Contract time chargeable for those operations shall be negotiated and agreed to in writing before such operations may commence.

1.20-1.08.08—Facilities Construction - Extension of Time: The Contractor may present to the Engineer a request in writing for an extension of Contract time if the time

necessary for completion of the Project has been increased due to extra or added work or delays resulting from unforeseeable causes beyond the control and without the fault or negligence of the Contractor, except for weather or seasonal conditions (unless extraordinary and catastrophic). Such causes include, but are not restricted to, natural catastrophes, acts of the State in either its sovereign or contractual capacity, acts of another contractor in the performance of a contract with the State, the presence of utility facilities (including railroads), fires, strikes, floods, or delays by suppliers arising from unforeseeable causes beyond the control and without the fault or negligence of either the Contractor or such suppliers.

The Contractor's plea that insufficient Contract time was allowed under the Contract before commencement of the Project is not a valid reason for extending the Contract time. Requests for an extension of time, with adequate substantiation, must be presented within 60 calendar days from the event that is the basis of the request or from the first effect of such an event on the Project. The Contractor will be responsible for providing all the documentation necessary to support the reasonableness of the additional time requested.

Such requests will be considered by the Engineer and granted to the extent that he deems to be fair and reasonable. Requests will not be considered if based on delays caused by conditions existing at the time the bids were received and of which the Contractor might reasonably be expected to have had full knowledge at that time, or upon delays caused by failure on the part of the Contractor to anticipate properly the requirements of the Project as to materials, labor or equipment. For all Project delays or time increases, except as provided below, additional Contract time is the sole remedy that the Contractor may have, and such periods of additional Contract time shall be deemed "Non-Compensable Delays." For delays caused by the State in its Contractual capacity, the Contractor may, in addition to a time extension, request additional compensation to reimburse it for damages sustained as a direct result of such delay, and such periods of extended Contract time may be deemed "Compensable Delays."

The period of a compensable delay is limited as follows: (1) it may not include time more than 60 days prior to the Engineer’s receiving written notice from the Contractor with adequate substantiation, of its intent to claim damages for the delay, (2) and it may not include periods of delay for which the State was responsible, but during which the Contractor experienced concurrent delays for which the State was not responsible.

Damages for periods of Project delay for which the State had sole responsibility shall be limited to the increased costs incurred by the Contractor (which shall not include lost profits), which the Contractor substantiates and which the Contractor shows were caused by such delays.

1.20-1.08.09—Facilities Construction - Failure to Complete Work on Time: Time is an essential element of the Contract. Since the prosecution of the Project may obstruct traffic, interfere with business, and otherwise inconvenience the public, it is important that the Project be pressed vigorously to completion. The cost to the Department of the administration of the Contract, including engineering, inspection and supervision, will also be increased as the time for Project completion is lengthened. Therefore, for each calendar day that any work shall remain uncompleted after the

Contract time has expired, the per diem sum of liquidated damages specified in the Contract shall be deducted from any money due to the Contractor. Liquidated damages are not a penalty, but are a reasonable estimate of the damages caused by such delay.

Liquidated damages as specified in the Contract shall be assessed against the Contractor per calendar day from that day until the date on which the Project is substantially completed.

The Engineer has the right to deduct the amount of the liquidated damages assessed against the Contractor from any estimated payment for work performed under the Contract or under any other State contract, or from any other sums owed by the State to the Contractor; or to claim and recover such sums by process of law.

1.20-1.08.10—Facilities Construction - Annulment of Contract: The Commissioner may give notice in writing to the Contractor and its surety of any delay, neglect, or default of the Contractor which the Commissioner believes has occurred, including one or more of the following:

1. Failure to begin the Project on the date specified in the Notice to Proceed.
2. Failure to perform the Project with sufficient personnel, equipment or materials to ensure timely Project completion.
3. Unsuitable performance of the Project or failure to perform Project work in accordance with the Contract.
4. Failure or refusal to remove or correct work rejected by the Engineer.
5. Discontinuance of suitable prosecution of the Project for a period of 72 hours, excluding Sundays and holidays, without written authorization to do so from the Engineer.
6. Failure to recommence discontinued work within 48 hours (excluding Sundays and holidays) after being ordered to do so by the Engineer.
7. Insolvency, filing for bankruptcy, or any act or occurrence which may render the Contractor financially incapable of completing the Project.
8. Failure to satisfy any final judgment for a period of 30 calendar days.
9. Making of any assignment for the benefit of creditors.
10. Violation of any provisions of the Contract.
11. Any other cause which, in the judgment of the Commissioner, warrants annulment, including, but not limited to, violations of the antitrust or criminal laws, and attempts to deceive or defraud the Department in material matters.

If the Contractor or surety within a period of 10 calendar days after such notice does not proceed in conformance with the directions set forth in the notification, or fails to present a remedial plan of operation satisfactory to the Commissioner, then the Commissioner may, at his discretion, order the surety to complete the Project or, without violating the Contract, take the right to control and prosecute the Project out of the hands of said Contractor and surety. No annulment or termination of the Contract for such cause will be deemed to have occurred, however, unless the Commissioner himself or herself (and not merely a designated representative of his or hers) expressly declares it in a writing to the Contractor.

The Department may acquire or rent whatever materials or equipment are necessary

in order to complete the Project and may seize and use for purposes of the Project (with any appropriate compensation to the Contractor) any material or equipment that the Contractor acquired or purchased expressly for the Project in accordance with a specific Contract requirement.

The Department may also enter into an agreement, either by negotiation or public letting, for the completion of the Contract according to the terms and provisions thereof, or use such other methods or combinations thereof as in the Commissioner's opinion shall be required or desirable for the completion of the Contract in an acceptable manner. All costs and charges incurred by the Department, in connection with completing the Project under the Contract, or as a result of the Contractor's default, shall be deducted from any monies due to or which may become due to the Contractor. In case such expense exceeds the sum which would have been payable under the Contract, then the Contractor and the surety shall be liable for, and shall pay to the State, the amount of the excess.

1.20-1.08.11—Facilities Construction - Final Cleaning Up: The Project will not be considered complete and will not be accepted until the rights of way, borrow pits, and all other ground, both public and private, occupied by the Contractor in connection with the Project has been cleared of all surplus and discarded materials, rubbish and temporary structures. The Contractor must drain all borrow pits where practicable. All property, both public and private, which has been damaged during the prosecution of the Project, shall be restored by the Contractor to an appearance and condition acceptable to the Engineer.

All ditches, waterways, drainage structures and culverts constructed under the Contract shall be cleaned and cleared of obstructions by the Contractor, and shall be left in a condition acceptable to the Engineer. When so directed by the Engineer, the Contractor shall clean all existing ditches, waterways, drainage structures and culverts of obstructions resulting from Project operations.

The Contractor shall:

(a) Clean each surface or unit to the satisfaction of the Engineer.

(b) Comply with all applicable manufacturer's recommendations for cleaning products and methods.

(c) Complete the following cleaning operations before requesting Substantial Completion Inspection for issuance of the Certificate of Compliance: remove labels that are not permanent labels; clean transparent materials, including mirrors and glass in doors and windows; remove glazing compound and other substances that are noticeable vision-obscuring materials; replace chipped or broken glass and other damaged transparent materials; clean exposed exterior and interior hard-surfaced finishes to a dust-free condition, free of stains, films and similar foreign substances; restore reflective surfaces to their original reflective condition; leave concrete floors broom-clean; vacuum carpeted surfaces; wipe surfaces of mechanical and electrical equipment; remove excess lubrication and other substances; clean plumbing fixtures to a sanitary condition; clean light fixtures and lamps; clean the site, including landscape development areas, of rubbish, litter and other foreign substances; sweep paved areas

broom-clean; remove stains, spills and other foreign deposits; and rake unpaved and unplanted grounds to a smooth even-textured surface.

(d) Engage a licensed exterminator to conduct an inspection and rid the Project of rodents, insects, and other pests, as necessary.

(e) Remove temporary facilities installed for protection of the Project work during construction.

(f) The Contractor shall not burn waste materials, bury debris or excess materials on the State's property or discharge volatile, harmful or dangerous materials into drainage systems. The Contractor shall remove waste materials from the site and dispose of lawfully.

(g) The Contractor shall not leave partial or full containers of materials, such as paints and solvents, other than those specified in the Contract, on the Project site. Such materials shall remain property of the Contractor and be removed from State property at the completion of the Project.

1.20-1.08.12—Facilities Construction - Semi-Final, Substantial Completion, and Final Inspections:

1. Semi-Final Inspection: If the Contractor has installed the permanent electrical service and completed all physical work, a Semi-Final Inspection will be scheduled as soon as practical after the Contractor submits the following:

(1) Record Drawings, Record Specifications, miscellaneous records, and Contractor Asbestos Certification Letter as referenced in Article 1.20-1.05.05;

(2) final survey;

(3) preliminary test/adjust/balance records including the air and water balance report;

(4) one draft copy of all Operation and Maintenance Manuals as referenced in Article 1.20-1.08.14;

(5) a list of all required training along with the entities who will provide the training and estimated time frames for each session;

(6) a list of all spare parts and salvage materials to be turned over to the Owner, and

(7) account numbers and copies of latest bills from each utility.

The Engineer, Designer, Building and Fire Code Officials, and the Owner will conduct an inspection to prepare a “Punch List” of unfulfilled, substandard, or incomplete items. During this inspection, the Contractor shall have all technicians necessary to demonstrate the complete operation of all systems on site. Examples of such systems include, but are not limited to, the following: boiler, HVAC, fire alarm, and building automation. Results of the completed inspection will form the basis of requirements for the Substantial Completion Inspection. The Engineer reserves the right to issue the C.O.C. after the Semi-Final Inspection if the requirements of the Substantial Completion Inspection are met and there are no Building Code or Fire Code compliance issues or any major “Punch List” items that would adversely affect the tenants of the facility after moving in. The Engineer will advise the Contractor of the construction that shall be completed before the issuance of the C.O.C.

2. Substantial Completion Inspection: Before requesting a Substantial Completion

Inspection for the issuance of the C.O.C, the Contractor shall complete all items listed on the Engineer's Semi-Final Inspection "Punch List." If the Engineer determines that the "Punch List" is complete, a Substantial Completion Inspection will be scheduled as soon as practical after the Contractor submits the following:

(1) final test/adjust/balance records including the air and water balance report;
(2) final copies of Operation and Maintenance Manuals as referenced in Article 1.20-1.08.14;
(3) executed warranties as referenced in Article 1.20-1.06.08;
(4) maintenance service agreements;
(5) final construction photographs;
(6) final meter readings for all utilities;

and the Contractor

(1) completes final cleaning requirements and touch up painting;
(2) delivers all spare parts and salvage materials to the Engineer; and
(3) completes all training of the Owner's personnel.

The Engineer and code officials will conduct the inspection. During this inspection, the Contractor shall have all technicians necessary to demonstrate the complete operation of all systems on-site if requested by the Engineer. The Engineer will advise the Contractor of the construction that is required to be completed.

3. Final Completion Inspection: The Engineer will schedule a Final Completion Inspection 1 year after the issuance of the C.O.C. for "Relief of Responsibility," notwithstanding any warranty obligations, only after the Engineer determines that the Contractor has satisfactorily:

(1) completed follow up door hardware adjusting;
(2) completed subsequent season air and water balancing;
(3) resolved warrantee issues;
(4) completed miscellaneous follow up testing; and
(5) completed landscaping requirements.

1.20-1.08.13—Facilities Construction - Termination of the Contractor's Responsibility:

1. General: The Contractor's responsibility for non-administrative Project work will be considered terminated when the final inspection has been held, any required additional work and final cleaning-up have been completed, all final operation and maintenance manuals have been submitted, and all of the Contractor's equipment and construction signs have been removed from the Project site. When these requirements have been met to the satisfaction of the Engineer, the Commissioner will accept the work by certifying in writing to the Contractor that the non-administrative Project work has been completed.

2. Utility Services: At the issuance of the Certificate of Compliance or at an earlier date if directed by the Engineer, the Contractor shall request in writing that permanent utility services be placed in the Department's name. The Contractor's written request shall include the following information: account number, meter number, exact street address, and, if applicable, the Certificate of Compliance date. Within 7 calendar days

of the receipt of the Contractor's written request, the Department will notify the utility providing the service that it will accept billing. The Department will not accept billing of any utility service until the Certificate of Compliance has been issued, unless the Engineer establishes an earlier date in writing.

3. Spare Parts: The Contractor shall review the Contract and prepare a list of acceptable material to be turned over to the State at the completion of the Project for review and concurrence by the Engineer.

The Contractor shall provide a material safety data sheet with all required items to comply with OSHA requirements. The Engineer will not accept partially used and open items such as paints and solvents.

4. Insurance Coverage: The Contractor shall have in place all insurance coverage identified in Article 1.20-1.03.07 for the performance of any warranty work.

1.20-1.08.14—Facilities Construction - Acceptance of Project: The Project will be accepted by the Commissioner when all Project work has been completed, as defined by the requirements of Article 1.20-1.08.13, and the following have been submitted to the satisfaction of the Engineer:

1. **Supporting information necessary to substantiate pay quantities, such as cost-plus backup documentation;**
2. **Reports and forms required on all Federal Aid Projects;**
3. **Record Documents:** The Contractor shall submit all documents required by Article 1.20-1.05.05 to the Engineer prior to the date of the Semi-Final Inspection.
4. **Operation and Maintenance Manuals:** Prior to the date of the Semi-Final Inspection, the Contractor shall compile operation and maintenance manuals in the form of instructional manuals for use by the Owner. The Contractor shall organize said manuals into suitable sets of manageable size and, where possible, assemble instructions for similar equipment into a single binder.

Where 2 or more binders are necessary to accommodate data of a system, the Contractor shall cross-reference other binders where necessary to provide essential information for proper operation or maintenance of the piece of equipment or system.

For each manual, the Contractor shall:

(a) Provide heavy-duty, commercial-quality, 3-ring, vinyl-covered, loose-leaf binders, thick enough to accommodate contents, sized to receive 8-1/2-inch x 11-inch paper.

(b) Identify the binder’s contents on binder’s front and spine with the printed title "OPERATION AND MAINTENANCE MANUAL," Project title or name, and subject matter covered, and volume number for multiple volume sets.

(c) Organize each manual into sections, separated by a heavy paper divider with a tab marked to indicate the contents of the section.

(d) Provide a title page as the first sheet of each manual with the following information: subject matter covered by the manual; Contract number and title; date of submittal; name, address, and telephone number of the Contractor; and cross-reference to related systems in other sections.

(e) Provide a written table of contents for each volume, arranged systematically

according to the organization of the Contract provisions (including specific CSI-formatted specifications within a particular Special Provision).

(f) Provide a general information section immediately following the table of contents, listing each product included in the manual, identified by product name. The Contractor shall list the name, address, and telephone number of the subcontractor, the maintenance contractor, and the local source for replacement parts and equipment for each product.

(g) Include manufacturer's standard printed data and mark each sheet to identify each part or product included in the Project, identify each product using appropriate references from the Contract, and delete references to information that is not applicable. The use of project record documents as part of operation and maintenance manuals is not permitted.

(h) Prepare supplementary text to provide operation and maintenance information when the manufacturer's standard printed data is not available or printed data is insufficient and the information is necessary for proper operation and maintenance of equipment or systems, organize text in a consistent format under separate headings for each procedure, and provide a logical sequence of instruction for each operation or maintenance procedure.

(i) Provide drawings where necessary in order to supplement manufacturer's printed data to illustrate the relationship of component parts of equipment or systems or to provide control or flow diagrams. Where oversize drawings are necessary, the Contractor shall fold drawings to the same size as text pages and use as a foldout. If the drawings are too large to be used practically as a foldout, the Contractor shall place the folded drawing in a 8-1/2-in x 11-in labeled pre-punched envelope or sleeve, and place it with the manufacturer’s printed data. The Contractor shall coordinate these drawings with information contained in project record drawings to ensure correct illustration of the completed installation. The use of Project record documents as part of operation and maintenance manuals is not permitted.

(j) Provide estimated life cycle costs to maintain each product included in the manual to reach maximum useful life (i.e. annual, mid-life overhaul, end of life overhaul, or programmed interval replacement).

Product Maintenance Manual: The Contractor shall provide:

(a) Manufacturer's data and instructions on care and maintenance of product material, and finish.

(b) Complete information on architectural products, including the following, as applicable: manufacturer’s catalog number, size, material composition, color, texture, and re-ordering information for specially manufactured products.

(c) Information (including cleaning schedule) on care and maintenance, including manufacturer's recommendations for types of cleaning agents and methods of cleaning, and methods of cleaning that could prove detrimental to the product.

(d) Complete manufacturer's data with instructions on inspection, maintenance, and repair of products exposed to the weather or designed for moisture-protection purposes.

(e) Manufacturer's data giving detailed information, including the following, as applicable: identification of relevant industry standards, chemical composition, installation details, inspection procedures, maintenance information, and repair procedures.

Equipment and Systems Maintenance Manual: The Contractor shall provide:

(a) A complete description of each unit and related component parts, including the following: name of manufacturer, model number and serial number, equipment or system function, operating characteristics, limiting conditions, performance curves, and engineering data and test results.

(b) The following for each unit and related component part: assembly drawings and diagrams required for maintenance, complete list of parts and supplies with current unit prices (identify which items are recommended to be stocked as spare parts and identify which items have an anticipated ordering and delivery time greater than 10 days), complete list of distributors and authorized repair facilities, and telephone numbers for technical service.

(c) Information detailing essential maintenance procedures, including the following or information about the following: routine operations; troubleshooting guide; disassembly, repair, and reassembly; alignment, adjusting, and checking; a list of any special tools required.

(d) Information on equipment and system operating procedures, including the following: startup procedures, equipment or system break-in, normal operating instructions, regulation and control procedures, instructions for shutdown and emergencies, summer and winter operating instructions, required sequences for electric or electronic systems, and special operating instructions.

(e) A schedule of routine servicing and lubrication requirements, including a list of required lubricants for equipment.

(f) As-installed control diagrams for systems requiring controls.

(g) Contractor's coordination drawings of as-installed piping and other systems, color-coded as needed for identification.

(h) Charts of valve tag numbers, with the location and function of each valve (clearly mark as such any valve intended for emergency shut-off or similar special use).

(i) Complete circuit directories of panelboards, including designations of the following: electric service, controls, and communication.

(j) Copies of maintenance agreements with service agent name and telephone number.

5. Training: The Contractor shall use experienced instructors thoroughly trained and experienced in operation and maintenance of Project equipment and systems, in order to instruct the Owner’s operation and maintenance personnel.

The Contractor shall develop a training schedule for approval by the Engineer, the Owner, and the Commissioning Authority when applicable that is coordinated with the Owner’s operations and working hours. This schedule shall be submitted a minimum of 30 calendar days in advance of the start of training.

The Contractor shall;

(1) arrange for each installer of equipment that requires regular maintenance to meet

with the Owner in order to provide instruction in the proper operation and maintenance of any equipment that requires regular maintenance,

(2) provide instruction by manufacturer's representatives if installers are not experienced in any relevant procedures,

(3) provide instruction at agreed-upon times, and

(4) provide Engineer with a minimum of 72 hours advance notice of the training sessions.

The Contractor shall provide a syllabus prior to the training to ensure that the appropriate Owner's operation and maintenance personnel are in attendance.

The Contractor shall submit to the Engineer for approval, a qualified commercial videographer to videotape the training sessions. The videographer shall be a firm or an individual of established reputation that has been regularly engaged as a professional videographer for not less than 3 years.

The Contractor shall video record each training session and provide said video in DVD format to the Engineer for the Owner's future use. Two (2) DVD's of all training sessions shall be turned over to the Owner through the Engineer. The videographer shall transfer copyright usage rights to the Owner for unlimited reproduction.

6. Any other documents required by the Contract.

SECTION 1.20-1.09
MEASUREMENT AND PAYMENT FOR FACILITIES CONSTRUCTION

1.20-1.09.01—Facilities Construction - Measurement of Quantities
1.20-1.09.02—Facilities Construction - Value Engineering Change Proposal
1.20-1.09.03—Facilities Construction - Increased or Decreased Quantities
1.20-1.09.04—Facilities Construction - Extra and Cost-Plus Work
1.20-1.09.05—Facilities Construction - Eliminated Items
1.20-1.09.06—Facilities Construction - Partial Payments
1.20-1.09.07—Facilities Construction - Final Payment
1.20-1.09.08—Facilities Construction - Payment of Costs Owed to the State

1.20.1.09.01—Facilities Construction - Measurement of Quantities: Work completed in compliance with the Contract will be measured by the Engineer according to U.S. Customary (System International) standard measures, and quantities of work performed shall be computed based on such measurements made in accordance with the methods of measurement described herein under provisions regarding the applicable Contract item.

Notwithstanding any other provision in the Contract, only work that is within the payment limits prescribed by the Contract or ordered by the Engineer will be measured for payment. No payment will be made for work that is not actually performed.

Structures shall be measured and quantities computed according to the neat lines shown on the plans (as those plans may be revised by authorization of the Engineer), or as may otherwise be required by the Contract.

Quantities of materials measured for payment by net weight shall be measured in tons, while contained in hauling vehicles on scales furnished by and at the expense of the

Contractor. The scales shall be satisfactory to the Engineer and shall be sealed. When required by the Engineer, an inspector will be appointed and compensated by the Department to check the weight of all materials to be incorporated into the Project. The tare weight of trucks used to haul materials being paid for by weight shall be taken at such times as the Engineer directs.

1.20-1.09.02—Facilities Construction - Value Engineering Change Proposal: These Value Engineering Change Proposal (VECP) provisions apply as encouragement to the Contractor to initiate, develop, and present to the Department for consideration cost- or time- reduction proposals or a combination of both conceived by the Contractor, involving changes to the drawings, designs, specifications, or other requirements of the Contract. These provisions do not apply unless the proposal submitted is specifically identified by the Contractor as being presented for consideration as a VECP. All such proposals must be made on the Department's VECP form, copies of which are available from the Department. The Department reserves the right to decline to review, or to reject after initial review, any VECP. Before expending considerable funds in development of a formal VECP, the Contractor shall submit a conceptual Proposal to the Department on Department-provided forms.

The proposals which may be considered as VECPs are those which, if implemented, (a) would require modification of the Contract by construction order; (b) would produce a savings to the Department by calling for the use of items or methods less costly than those specified in the Contract; (c) would not alter necessary standardized features of the original Project; and (d) would not impair essential functions or characteristics of the construction called for by the original Contract, such as service life, reliability, economy of operation, and ease of maintenance.

Material substitution alone will not be considered as a VECP.

A VECP may shorten Contract time, however, acceleration alone will not be considered as a VECP.

Cautions and Conditions:

1. The Contractor is cautioned not to base any bid or bid price on the anticipated approval of a VECP and to recognize that such Proposal may be rejected. The Contractor will be required to perform the Contract in accordance with the existing Contract plans and specifications at the prices bid unless and until the Department formally accepts, in writing, the Contractor's VECP.
2. In order for the Department to consider such a Proposal, the savings likely to be generated by the Proposal must be sufficient, in the sole judgement of the Department, to warrant its review and processing by the Department. All costs resulting from such review or processing will be borne by the Department. Before any VECP will be considered by the Department, the Department must determine, in its sole judgement, that implementation of the Proposal would result in a total cost savings of more than $100,000.00, reflecting a savings of at least $50,000.00 for the Department. The Department will not consider any VECP that would require an increase in Contract time.
3. All VECPs apply only to the ongoing Contract, and whether approved or not, such Proposals become the property of the Department. Such Proposals shall contain

no restrictions imposed by the Contractor on their use or disclosure by the State. The Department will have the right to use, duplicate and disclose in whole or in part any data necessary for the use or implementation of the Proposal. The Department retains the right to use any accepted Proposal or part thereof on any other current or subsequent Department projects without any obligation to the Contractor for such use. This provision is not intended to deny rights provided by law with respect to patented materials or processes.

4. If the Department already has under consideration certain revisions of the Contract or has approved certain changes in specifications or standard drawings for general use which subsequently appear in a VECP, the Department may reject the Contractor's Proposal and may proceed with such revisions without any obligation to the Contractor.
5. The Proposal must be presented and approved in writing prior to the Contractor's undertaking any work on the Contract items involved in the proposal. Savings due to a reduction in quantities or deletion of items which result solely from adjustments to field conditions, and Proposals which would only waive specification or other Contract requirements, are not considered to be VECPs.
6. The Contractor shall have no claim against the Department for any costs or delays due to the Department's review or rejection of a VECP, including, but not limited to, development costs, anticipated profits, or increased material or labor costs resulting from delays in the review or rejection of such Proposal.
7. The Department will be the sole judge of the acceptability of a Proposal and of the estimated net savings in construction costs that would result from adoption of all or any part(s) of such Proposal. In determining such estimated net savings, the Department reserves the right to disregard the Contract bid prices if, in the judgment of the Engineer, such prices do not represent a fair measure of the value of work to be performed or deleted under the Proposal. Errors in the estimated quantities in the bid proposal form for the Contract shall be corrected by the Department prior to calculating the savings that would likely result from adoption of the VECP.
8. The Engineer may reject all or any portion of work performed pursuant to an approved VECP if the Engineer determines that unsatisfactory results are being obtained because of the Proposal's implementation with regard to that work. The Engineer may direct the removal of such rejected work and require the Contractor to proceed in accordance with the original Contract requirements. Where modifications of the VECP have been approved in order to adjust to field or other conditions, payment will be limited to the total amount payable for the work at the Contract bid prices, as if the pertinent work had been constructed in accordance with the original Contract requirements. The Contractor waives the right to use such rejection or limitation of reimbursement as the basis of any claim against the State for delay damages or for any other damages or costs.
9. VECPs must meet the requirements of the specifications or standards of the Department. The standards governing the original design of the Contract will be the minimal standard allowed.
10. If additional information is needed in order for the Department to evaluate

Proposals, the Contractor must provide the Department with this information within 14 calendar days of such request or within such other time period as may be approved by the Department. Failure to do so will result in rejection of the Proposal.

11. The Contractor shall provide revised Project plans, specifications and estimates to the Department in construction order format, reflecting such changes as would be required for implementation of the VECP. The Contractor shall be solely responsible for any errors or omissions resulting from such revisions.
12. Savings not directly related to the Contract, such as, but not limited to, reductions in inspection or testing costs or Department overhead, will not be included in the savings calculation for any VECP.

After the Contractor submits a conceptual Proposal, they will be notified in writing of the acceptability or the reason(s) for its rejection. The Department retains the right to reject the formal Proposal even if the conceptual Proposal was determined acceptable.

VECPs will be processed in the same manner as are alterations of the Contract that require a construction order.

VECP Submittal Requirements:

1. A statement that the Proposal is being submitted as a VECP.
2. A description of the difference between the existing Contract requirements and the proposed change(s), and the comparative advantages and disadvantages of each, taking into account considerations of service life, economy of operations, ease of maintenance, desired appearance, safety, and environmental impacts or necessary permit changes. When an item's function or characteristics would be altered by implementation of the Proposal, a justification of the anticipated effects of the alteration on the end item's performance must be included in the Proposal. A life-cycle cost analysis must be included for items involving alteration of functional characteristics. Factors for determining future worth will be provided by the Department.
3. Complete plans, specifications, and computations signed and sealed by a Professional Engineer licensed by the State of Connecticut, showing that the proposed Contract revisions would incorporate the same design criteria and restrictions that applied to the original Contract features and requirements. Said revisions shall be submitted by the Contractor in the Department's construction order format consisting of 1 paper copy of the plans and 1 electronic copy of the plans as a portable document format (PDF) file, indicating
   (a) quantity increases and decreases by item number, with associated cost;
   (b) new items, with their quantities and costs;
   (c) specifications in contract format; and, if needed,
   (d) compliance permit applications and revisions in accordance with Articles 1.20-1.10.01 through 1.20-1.10.08 of these specifications.
4. A complete analysis of the probable cost effects of the proposed changes on Project construction, future operations in connection with the completed Project, maintenance and durability of completed Project construction, and other aspects of the Project, as appropriate.
5. The date by which the Proposal would have to be implemented in order for the

Department to obtain the maximum cost reduction from the Proposal's implementation. The period established by the date must allow the Department ample time for review and processing of the Proposal. Should the Department find that it does not have sufficient time for such review and processing, it may reject the Proposal solely on such basis. If the Department fails to respond to the Proposal by said date, the Contractor shall consider the Proposal to be rejected and shall have no claims against the State as a result thereof.

6. A description of the effect that the implementation of the Proposal would likely have on the time required to complete the Project.

Payment for accepted VECPs:

1. The changes resulting from a VECP will be incorporated into the Contract by construction order and shall reflect the changes in existing unit bid item quantities, or any new agreed price items, cost-plus lump sum, or any combination thereof, as appropriate, in accordance with the Specifications and as determined by the Department. Any lump sum submission shall be accompanied by a schedule of payment values.
2. The Contract prices for the revised Project work will be paid directly as accomplished. In addition to such payment, the Department will pay the Contractor, under a separate item or a Value Engineering Incentive item, 50% of the total savings obtained by the State as a result of its implementation of the VECP. An estimate of said savings is to be calculated by the Department within 1 week prior to the Proposal's acceptance, by
   (a) estimating what it will cost the Department to carry out the Project as revised according to the VECP;
   (b) estimating what it would have cost the Department to carry out the Project under the terms of the Contract as modified by any construction orders as of the time that the Department accepted the Proposal; and
   (c) subtracting the sum estimated as per (a) from the sum estimated as per (b).

   When the implementation of the Proposal, including all related construction, has been completed, the Department will calculate the actual savings that resulted from it. The Department will then distribute half of the actual savings to the Contractor.
3. The Contractor's costs for development, design, submission and processing of the VECP are not eligible for reimbursement.
4. The Department will not reimburse the Contractor based on any cost savings not identified in the VECP prior to its acceptance.
5. The cost savings from a VECP that is exclusively time reduction shall be calculated as the number of Contract days reduced multiplied by the amount of liquidated damages for 1 day under the Contract.

1.20-1.09.03—Facilities Construction - Increased or Decreased Quantities:

Whenever the quantity of any item as given in both the bid proposal form and Contract is increased or decreased, the Department will pay for such item at the Contract price, on the basis of the actual quantity completed, except as otherwise expressly authorized under the provisions of Articles 1.20-1.04.02, 1.20-1.04.03 or 1.20- 1.04.04.

1.20-1.09.04—Facilities Construction - Extra and Cost-Plus Work: Extra work shall be performed only under the conditions and subject to the requirements outlined in Article 1.20-1.04.05. Payment for such work shall be based either on a unit price or on a lump sum, to be agreed upon before the extra work is started; or, if no agreement as to price can be reached, the Engineer may order that the work will be paid for on a cost-plus basis.

For all work done on a cost-plus basis, the Contractor's compensation shall be determined in accordance with the following requirements:

(a) Labor:

(1) For all labor, the Department shall pay the Contractor the wage rate actually paid as shown by its certified payroll, which shall be at least the minimum rate established for the Project by the State Labor Department or the U.S. Department of Labor. For all foremen in direct charge of Project work, the Department will pay the Contractor the actual wage paid to the foremen as shown on the Contractor's certified payroll.

(2) The Department will reimburse the Contractor for the actual costs paid to, or on behalf of, workers by reason of allowances, health and welfare benefits, pension fund benefits and other such benefits, when such amounts are required by a collective bargaining agreement or another employment contract generally applicable to the classes of labor employed on the Project. The Contractor shall certify all such costs.

(3) For property damage, liability and workmen's compensation insurance premiums, unemployment insurance contributions and social security taxes on Project cost-plus work, the Department will reimburse the Contractor for its actual Project costs. The Contractor shall provide to the Engineer documentation, satisfactory to the Engineer in form and substance, of all such costs.

(4) The Department will also pay to the Contractor an amount equal to 20% (15% for overhead, 5% for profit) of the total sums described in **(a)** (1) through (3) above.

No part of the salary or expenses of anyone connected with the Contractor's forces above the grade of project superintendent, who provides general supervision of Project work, will be included in the above payment calculations, except when the Contractor's organization is entirely occupied with cost-plus work, in which case the salary of a superintendent may be included in said labor item when the nature of the pertinent Project work is such that, in the opinion of the Engineer, a superintendent is required for that work. The allowable rate of pay for such superintendent shall be agreed upon before the Contractor begins the pertinent work. If no agreement on the rate can be reached, the Engineer will make payment based on such rate as he deems reasonable

The Engineer reserves the right to determine the number and type of personnel to be employed for the cost-plus Project work.

(b) Specialized Work: When the Engineer directs the Contractor to perform specialized work requiring skills, tools and equipment substantially unlike those ordinarily used by the Contractor or its authorized Project subcontractors, the Department will pay the Contractor for the use of a specialist to perform the specialized work. For such specialized services, including materials incorporated into the Project,

the Department will pay the Contractor its actual costs, plus additional compensation in accordance with subparagraph (e) below. Prior to performing such specialized work, the Contractor shall obtain and submit to the Engineer a minimum of three price quotes for the work, if requested by the Engineer.

(c) Materials: For all materials necessary for cost-plus Project work, the Department will pay the Contractor its actual cost for such materials as delivered to the Project site, including delivery charges as shown by original receipted bills, plus 15 % of the sum of said cost and charges.

In lieu of receipted bills for materials used which were not specifically purchased for the Project, but were taken from the Contractor's stock, the Contractor shall provide to the Engineer an affidavit certifying that such materials were not purchased for the Project, that the materials were taken from the Contractor's stock, that the quantity claimed to have been used on the Project was actually so used, and that the price claimed for the materials is currently their fair market value. The Department will pay for costs of transporting the materials to the Project site, in accordance with subparagraphs (a) and (d) hereof.

The Department will not reimburse the Contractor for any penalty or charge incurred due to the Contractor's late or delayed payment for the pertinent materials.

(d) Equipment: All equipment used for cost-plus Project work must, in the judgment of the Engineer, be in good working condition and suitable for the purpose intended; and the Engineer reserves the right to determine the size and number of units of equipment to be used for such work. The manufacturer's ratings shall be the basis for all Rental Rate Blue Book classifications used for payment purposes. ("Rental Rate Blue Book" as used in these specifications refers to the current edition of the Rental Rate Blue Book, taking into account all current Rate Adjustment Tables, and amendments thereof, which is published by K III Directory Corporation of San Jose, California, including all current Rate Adjustment Tables and amendments thereof.) Trucks will be classified by cubic-yard capacity.

No percentage mark-up will be added for payment purposes to amounts charged by the Contractor based on equipment rental rates.

The Department will not pay rental rates for small tools needed to complete the cost-plus Project work.

For payment purposes, estimated operating costs per hour from the Rental Rate Blue Book will apply only to the actual time during which the equipment is actively being used to perform cost-plus Project work.

For equipment that is also being used for non-cost-plus Project work, the Department will pay the applicable hourly rate only for the actual time that the equipment is assigned to cost-plus Project work. The applicable period of assignment for each piece of equipment shall start when the equipment commences to be used for cost-plus Project work ordered by the Engineer, and shall end at the time designated by the Engineer.

For equipment which has to be brought to the Project site exclusively for cost-plus work, the Department will reimburse the Contractor for loading and unloading costs and costs of transporting such equipment to and from the Project site; provided, however, that payment for return transportation from the Project site shall not exceed the cost of moving the equipment to that site. If such a piece of equipment is self-propelled, and is

driven to the Project site under its own power, then the Department will pay only operating costs and labor costs for its transport to and from the Project site. The Department will not, however, pay for any loading, unloading and transportation costs if the equipment is used for any Project work on the site other than cost-plus work.

(1) Owned Equipment: The Department will pay the Contractor the applicable rental rate set forth in the Rental Rate Blue Book for any equipment (1) which the Contractor uses, with the Engineer's authorization, to perform cost-plus Project work, and (2) which is owned by the Contractor or a subsidiary, affiliate, or parent company of the Contractor (no matter how far up or down the chain of ownership from the Contractor).

The maximum hourly rate to be used in paying for Contractor-owned equipment assigned to cost-plus work shall be the applicable monthly rate in the Rental Rate Blue Book, divided by 176 (176 working hours per month).

Should the proper completion of the cost-plus Project work require equipment of a type not covered by the Rental Rate Blue Book, the Engineer will determine, and the Department will make payment to the Contractor at, a reasonable rental rate based on rates prevailing in the area of the Project. If practicable, such rates shall be determined by the Engineer before the affected work is begun. If the Contractor proposes that the Engineer use a particular rate in such an instance, the Contractor must disclose to the Engineer the specific sources of, or support for, said rate.

If a piece of equipment owned by the Contractor is assigned to cost-plus Project work, but remains idle for some portion of the period of the cost-plus work, the Department will pay for that idle time at 50% of the applicable rental rate (exclusive of operating costs) in the Rental Rate Blue Book.

For payment purposes, the period of equipment usage shall be deemed to start when the Contractor begins to use the equipment for cost-plus Project work and shall be deemed to end when the equipment is released by the Engineer from use for such work. Any hours during which the equipment is used for work other than cost-plus Project work will be deducted from the pertinent payment period.

For any piece of Contractor-owned equipment assigned to cost-plus Project work, the Department will reimburse the Contractor for an aggregate minimum of 8 hours (of use time, idle time, or a combination thereof) in each 24-hour day (measured from one midnight to the following midnight) during the assignment period. No such reimbursement will be made, however, for Saturdays, Sundays and legal holidays during which the Contractor does no Project work, or for any other day on which the Engineer orders the Contractor to do no Project work. If the equipment is used to perform cost-plus Project work for more than 8 hours in a day, the Department will pay the Contractor at the applicable hourly rate computed on a monthly basis for the actual time of use; however the Department will not pay the Contractor for more than 8 hours of idle time for a piece of equipment during a given day.

The Department shall have the right to limit its aggregate Project payments for idle time for a given piece of equipment to the replacement value of that equipment.

(2) Rented Equipment: If the Engineer determines that in order to perform the cost-plus Project work the Contractor must rent certain machinery, trucks or other equipment not owned by the Contractor or a subsidiary, affiliate, or parent company of the Contractor (no matter how far up or down the chain of ownership from the Contractor), the Contractor shall inform the Engineer, in advance of such rental, (1) of the specific nature of the rental(s), (2) the reasons for its need for such rental(s), (3) the anticipated or proposed rental rate(s), and (4) the estimated duration for the use of the equipment. Rates for such rented equipment must be provided based on the following:

—A daily rate per hour when the equipment is to be specifically assigned to Project work by the Engineer for a period of 7 consecutive calendar days or less.

—A weekly rate per hour when such assigned time exceeds 7 consecutive calendar days, but does not exceed 21 consecutive calendar days.

—A monthly rate per hour when such assigned time exceeds 21 consecutive calendar days.

The applicable daily, weekly, or monthly rate will be determined at the expiration of 21 calendar days or upon release of the equipment by the Engineer, whichever occurs first. Interruptions of the rental period, when equipment is used on other than assigned cost-plus work, will not entitle the Contractor to payment at a rental rate that would be applicable to the shorter periods arguably occasioned by such interruptions.

Prior to renting such equipment, the Contractor shall obtain and submit to the Engineer a minimum of three quotes, if requested by the Engineer.

The Department will pay the Contractor for such rental at the rate actually paid by the Contractor, provided that the given use and rental rate are acceptable to the Engineer. In order to obtain such payment, the Contractor must provide the Engineer with a copy of the original receipted bill for the rental expenses incurred.

(e) Administrative Expense: When extra work on a cost-plus basis is performed by an authorized subcontractor, the Department will pay the Contractor an additional 7.5% for that work; such payment will be in addition to the percentage payments described in (a), (b), (c) and (d) above, as a reimbursement for the Contractor's administrative expense in connection with such work. Approval of such additional payments will be given only after the Contractor provides to the Engineer receipted invoices for all relevant costs.

(f) Miscellaneous: The compensation provided for in (a), (b), (c), (d) and (e) above shall be deemed to be payment in full for the extra work and shall be deemed as full compensation for same, including costs of superintendence, use of small tools, equipment for which no rental is allowed, safety equipment, consumables, field office overhead, home office overhead, bonding, other insurance, and profit. The Contractor's representative and the Engineer shall compare their respective records of the extra work done on a cost-plus basis at the end of each day. Copies of these records shall be signed by both the Engineer and the Contractor's representative. The Engineer will then forward a copy of same to the Contractor and to any affected subcontractor in

accordance with Department procedures. Upon payment of such costs by the Contractor, the Contractor shall immediately furnish the Engineer with original receipted bills covering the costs, including transportation charges, for all materials used for such work.

1.20-1.09.05—Facilities Construction - Eliminated Items: Should the Engineer determine any Contract items, or portion of Project work contained in a lump sum item, to be unnecessary for completion of the Project, the Engineer may eliminate such items or portion of work from the Contract. Such action shall in no way invalidate the Contract; and no allowance for any items, or portion of work contained in a lump sum item so eliminated, will be made by the Engineer in making final payment to the Contractor, except for (a) such actual work as may have been done on the items, or portion of work contained in a lump sum item, prior to the Engineer's notice to the Contractor that the items or work had been eliminated; and (b) such related material as may have been purchased for the Project prior to said notice. This provision shall apply unless the Engineer determines that an elimination of a given item, or portion of work contained in a lump sum item, constitutes a "significant change" in the character of the Contract work, as defined under Article 1.20-1.04.03. In such a case, the terms of Article 1.20-1.04.03 shall be applied to the payment issues related to the eliminated item or work.

1.20-1.09.06—Facilities Construction - Partial Payments:

A. Monthly and Semi-monthly Estimates:

(1) Once each month, the Engineer will make, in writing, current estimates of the value of work performed in accordance with the Contract, calculated at Contract unit prices, including but not limited to the value of materials complete in place and materials not yet incorporated into the Project, but approved by the Engineer for payment (as provided for elsewhere in this article). Retainage will not be held.

Exceptions may be made as follows:

(a) When not in conflict with the interests of the State, the Contractor may request, and the Engineer may make, semi-monthly estimates for payment.

(b) If, in the judgment of the Assistant District Engineer, the Project is not proceeding in accordance with the Contract the Engineer may decline to make a payment estimate.

(c) If the total value of the Project work completed since the last estimate amounts to less than $2,500, the Engineer also may decline to make a payment estimate.

(2) The Engineer may also make payment at Contract unit prices for the number of units that represent the value of the Project work performed to date, if said units are essentially, though not totally, complete.

B. Payment for Stored Materials: Non-perishable materials that are required for Project construction and that the Contractor has produced or purchased specifically for incorporation into the Project, but which have not yet been so incorporated, may be included in a payment estimate if

(i) the materials meet all applicable Contract specifications,

(ii) the materials have been delivered to the Project site or to another location approved by the Engineer, and

(iii) the Contractor has submitted to the Engineer, as evidence of the Contractor's purchase of the materials, either a copy of a receipted bill for same or a Certificate of Title to the materials, in the form approved by the Department, duly-executed by the Contractor and the Vendor.

The Engineer will decide at what fair and appropriate fraction of the applicable Contract price such materials may be included in a payment estimate.

Offsite storage may be approved by the Engineer, provided that the materials proposed for payment are segregated from other materials, clearly labeled as being owned by the Department for use on the identified Project, otherwise handled in compliance with Article 1.20-1.06.03, and stored in accordance with the manufacturer's recommendations. All such materials must be readily-available for inventory and inspection by the Engineer. Storage outside of the State of Connecticut may be considered only when a representative of the Department is able to verify that the above requirements have been satisfied.

For items requiring extended fabrication, manufacturing or assembly time, the Contractor may propose to the Engineer a schedule of values for the related material costs. If the Engineer approves such a schedule of values, it shall become the Basis of Payment for the stored materials, so long as all other pertinent Contract requirements have been satisfied.

Generic materials having a use on many projects will be considered for payment prior to their incorporation into the Project only if stored in unopened packaging or in large lots. Stock and raw materials will not be considered for such advance payment without the Engineer's prior written consent thereto.

In no case shall material payments exceed the Contract unit price or lump sum price less the actual value of delivery and installation of the materials; if they do exceed such a price, the Engineer reserves the right to reduce any related payment accordingly. Such reductions in payment shall in no way affect the Department's ownership interest in the stored materials.

1.20-1.09.07—Facilities Construction - Final Payment: When the Commissioner has accepted the Project in accordance with Article 1.20-1.08.14, the Engineer will prepare a final payment estimate.

1.20-1.09.08—Facilities Construction - Vacant

1.20-1.09.09—Facilities Construction - Payment of Costs Owed to the State: The State shall have the right to set off against amounts otherwise due to the Contractor under this Contract or under any other contract or arrangement that the Contractor has with the State

(a) any costs that the State has incurred due to the Contractor's noncompliance with this Contract and

(b) any other amounts that are due and payable from the Contractor to the State.

Any sum taken in setoff from the Contractor shall be deemed to have been paid to the

Contractor for purposes of payment obligations under Article 1.20-1.03.04 of these Specifications.

SECTION 1.20-1.10
ENVIRONMENTAL COMPLIANCE FOR FACILITIES CONSTRUCTION

1.20-1.10.01—Facilities Construction - General
1.20-1.10.02—Facilities Construction - Compliance with Laws and Regulations
1.20-1.10.03—Facilities Construction - Water Pollution Control
1.20-1.10.04—Facilities Construction - Vacant
1.20-1.10.05—Facilities Construction - Construction Noise Pollution
1.20-1.10.06—Facilities Construction - Protection of Archaeological and Paleontological Remains and Materials
1.20-1.10.07—Facilities Construction - Controlled and Hazardous Materials
1.20.1.10.08—Facilities Construction - Vehicle Emissions

1.20-1.10.01—Facilities Construction - General: During and following Project construction, the Contractor shall exercise precaution and care to prevent or minimize negative effects on the environment, including the State's waters, wetlands, and other natural resources.

The Contractor shall comply with all Project permits and permit applications as though the Contractor were the permittee.

The Contractor must comply with the environmental provisions specified in the Contract, and any Federal, State or municipal laws or regulations. If the Contractor fails to comply with these environmental provisions, the Contractor shall be penalized as specified in this Section and elsewhere in the Contract.

1.20-1.10.02—Facilities Construction - Compliance with Laws and Regulations: The Contractor shall conduct its operations in conformance with the permit requirements established by Federal, State and municipal laws and regulations.

The Department will be responsible for obtaining all environmental permits required for Contract work. If at the time such a permit is issued, its contents differ from those described in the Contract, the permit shall govern. Should the permit be issued after the solicitation of bid proposals, and should the permit requirements significantly change the character of the work as described in the Department's Project bid documents, Contract adjustments will be made in accordance with the applicable articles in Articles 1.20-1.04.01 through 1.20-1.04.07 of these specifications.

The Contractor shall be responsible for, and hold the State harmless from, any penalties or fines assessed by any authority due to the Contractor's failure to comply with any term of an applicable environmental permit.

Any request by the Contractor for the Department's authorization of an activity or use of a method not specifically called for or allowed by the applicable permits issued for the Project must be submitted by the Contractor in writing to the Engineer. Such a request must include a detailed description of the proposed alternate activity or method, and must include justifications for same, along with supporting documentation, showing that

the proposed alternate activity or method will not create a risk of damage to the environment, increase the permitted wetland impact footprint, or increase fill within a floodplain. If such request is granted by the Engineer, the Department will forward to the appropriate regulatory agency or agencies any permit modification, permit revision, *de minimis* change or new permit required for the Contractor to carry out the proposed alternate activity or method in question. The Department does not, however, guarantee that it will be able to obtain such approval from the regulatory agency or agencies; and the Department will not be liable for the effects of such inability to do so.

The Contractor will not be entitled to any extension of Contract time as a result of the Engineer's granting of such a request from the Contractor. If changes to the permit are not necessary except to accommodate changes requested by the Contractor, then no claim may be made by the Contractor based on the amount of time taken by the Department to review the Contractor's request or to secure approval of related permit changes from the regulatory agency or agencies. The proposed alternate activity or method shall not commence until and unless the Engineer has approved the Contractor's request.

1.20-1.10.03—Facilities Construction - Water Pollution Control: The Contractor shall, throughout the duration of the Contract, control and abate siltation, sedimentation and pollution of all waters, including but not limited to under-ground water systems, inland wetlands, tidal wetlands, and coastal or navigable waters.

Construction methods proposed by the Contractor must comply with the approved permit requirements and permit applications. The Contractor shall be responsible for all obligations and costs incurred as a result of the Contractor's failure to comply with the terms and conditions of such permits or permit applications.

The following are Required Best Management Practices for prevention and control of water pollution. Provisions of the Required Best Management Practices may be superseded as specified in Article 1.20-1.05.04. The Contractor shall not make any design change in the Contract work that requires a variance from the requirements of the following items until and unless the Contractor has first submitted a detailed written proposal for such variance to the Engineer for review by the Department and for transmittal to and review by the Federal, State or municipal environmental authority, and has then received written approval from the Department of the proposed variance.

REQUIRED BEST MANAGEMENT PRACTICES

1. Prior to commencing Project Site work, the Contractor shall submit in writing to the Engineer an “Erosion and Sedimentation Control Plan” and a “Dust Control Plan” for all Project construction stages. The Contractor shall install all control measures specified in said Plans prior to commencement of Project construction activities. The Plans shall be consistent with the 2002 Connecticut Guidelines for Soil Erosion and Sediment Control, the 2004 Connecticut Stormwater Quality Manual, and all environmental laws and regulations established by Federal, State or municipal agencies, as well as the Department's published environmental policies and standards. If the Contractor elects to work during a winter

shut-down period, the Contractor shall submit to the Engineer a separate Winter Erosion and Sedimentation Control Plan, obtain the Engineer's written approval of it, and implement it before the Contractor begins Project work during the winter shut-down period.

2. The Contractor shall inspect erosion and sedimentation controls at least weekly, immediately after each rainfall event of at least 0.1 inch, and daily during periods of prolonged rainfall. The Contractor shall maintain all erosion and sedimentation control devices in a functional condition, in accordance with the Contract plans, relevant permits, Special Provisions, and 2002 Connecticut Guidelines for Soil Erosion and Sediment Control. In the event that the Contractor fails to maintain such devices in accordance with said documents, and the Contractor does not correct such a failure within 24 hours after receipt of written notice of such a failure from the Engineer, the Department may proceed with its own or other forces to remedy such failures. The cost to the Department of curing any such specified failure will be deducted from monies owed to the Contractor under the Contract or under any other State contract.
3. Washout of applicators, containers, vehicles, and equipment that have been used with concrete (including bituminous concrete), paint or other such possible contaminants shall be conducted: (i) at least 50 ft from any stream, wetland or other sensitive resource; and (ii) in an entirely self-contained washout system. Such materials shall be collected and disposed of in accordance with all applicable Federal, State and municipal laws and regulations.
4. No materials resulting from Project construction activities shall be placed in or allowed to contribute to the degradation of a wetland, watercourse or storm drainage system. Good housekeeping of the Site by the Contractor for the purpose of preventing construction-related debris or runoff from entering a regulated area is required. The Contractor shall not leave waste or debris within the travel way or roadside where it might create a safety hazard to the traveling public. The Contractor shall dispose of all construction-related materials in accordance with Federal, State and municipal laws and regulations.
5. In accordance with CGS Section 22a-38, the Contractor shall not withdraw water from any watercourse system, except as allowed by applicable permits.
6. The Contractor shall not dispose of any material until and unless it has proposed a location for its disposal to the Engineer and the Engineer has approved said location in writing.

   If the proposed disposal location is on private property, the Contractor must include in the disposal location proposal to the Engineer letters from the property owner and the affected municipality, agreeing to the proposed location for disposal.

   The Contractor shall ensure that proposed disposal locations are outside of wetlands or watercourses, floodplains and water or natural resource areas.

7. Before commencing any work in or adjacent to a regulated area shown on the plans, permit(s), or identified by the Engineer, the Contractor must submit in writing to the Engineer a construction-sequencing plan, a water-handling plan, and a flood contingency plan, and obtain from the Engineer written approval of said plans..
8. When dewatering is necessary, the Contractor must not allow pumps used for same to discharge directly into a wetland or watercourse. Prior to any dewatering, the Contractor must submit to the Engineer a written proposal for specific methods and devices to be used for same, and must obtain the Engineer's written approval of such methods and devices, including, but not limited to, the pumping of water into a temporary sedimentation basin, providing surge protection at the inlet or outlet of pumps, floating the intake of a pump, or any other method for minimizing or retaining the suspended solids. If the Engineer determines that a pumping operation is causing turbidity in a regulated area, the Contractor shall halt said operation until a means of controlling the turbidity is submitted by the Contractor in writing to the Engineer, approved in writing by the Engineer, and implemented by the Contractor.
9. Whenever possible, work within or adjacent to watercourses shall be conducted during periods of low flow. The Engineer shall remain aware of flow conditions during the conduct of such work, and shall order such work stopped if flow conditions threaten to cause excessive erosion, siltation or turbidity. Before predicted major storms (*i.e.*, a storm predicted by NOAA Weather Service, with warnings of flooding, severe thunderstorms, or similarly severe weather conditions or effects), the Contractor shall make every effort to secure the Site to the satisfaction of the Engineer. Unless allowed by a DEEP permit, the Contractor shall store no materials and place no staging areas below the 100-year elevation. The Contractor shall not store below the 500-year flood level any materials which are buoyant, hazardous, flammable, explosive, soluble, expansive, radioactive, and any other materials that could be injurious to human, animal or plant life in the event of a flood.
10. Upon completion of the associated work, the Contractor shall immediately clear all areas of all forms, false work, piling, debris or other obstructions created or caused by construction operations.
11. If the Contractor wants to make a change in construction operations, staging or scheduling that would affect the use of or necessity for any pollution controls, the Contractor must submit to the Engineer a written proposal detailing them the proposed change, and must receive the Engineer's approval of such change, before implementing it. Such submission must include a plan showing what erosion and sedimentation controls above and beyond those called for in the Contract would be necessitated by the proposed change.
12. Dumping of oil, fuel, chemicals or other harmful materials on the ground or into a regulated area is forbidden. The Contractor shall provide to the

Engineer a written Spill Prevention and Remediation Plan for the Project, outlining the Contractor's intended means of catching, retaining, and properly disposing of drained oil, removed oil filters, fuel, chemicals and other harmful material. Such plan shall also include the information and protocols needed for the remediation of, any spill that might occur on the Site, including emergency contact information. No construction activities shall commence until such a plan has been approved in writing by the Engineer.

13. The Contractor shall restore all areas within or outside the State right-of-way that have been disturbed as a result of construction activities, in accordance with Article 1.20-1.08.11.

1.20-1.10.04—Facilities Construction - Vacant

1.20-1.10.05—Facilities Construction - Construction Noise Pollution: The Contractor shall take measures to minimize the noise caused by its construction operations, including but not limited to noise generated by equipment used for drilling, pile-driving, blasting, excavation or hauling.

All methods and devices employed to minimize noise shall be subject to the continuing approval of the Engineer. The maximum allowable level of noise at the residence or occupied building nearest to the Site shall be 90 decibels on the "A"-weighted scale (dBA). The Contractor shall halt any Project operation that violates this standard at any time until the Contractor develops and implements a methodology that enables it to keep the noise from its Project operations below the 90-dBA limit.

1.20-1.10.06—Facilities Construction - Protection of Archaeological and Paleontological Remains and Materials: The Contractor shall be alert to the possibility that Project operations may disturb or uncover significant archaeological or paleontological resources or other such remains which in many cases are protected by Federal laws, State laws or both. Archaeological resources are minimally defined by Federal regulations as materials 50 years of age or older. They typically consist of subsurface concentrations of metal, bone, ceramic, or flaked or other shaped stone artifacts. They might also consist of *features* such as buried building foundations, linear or circular walls made of individual stones rather than concrete or cement, trash-filled pits, patches of burned earth, or distinct patterns of nearly-circular, elliptical, or squared discolorations in newly-exposed soil, accompanied by the types of *artifacts* described above.

Paleontological resources are defined as any fossilized remains, traces, or imprints of organisms, preserved in or on the earth’s crust. These typically include fossilized bones, teeth, shells, eggs, or distinct impressions made in bedrock.

When archaeological or paleontological materials are inadvertently encountered, the Contractor shall immediately halt operations in the location of same and shall notify the Engineer of said discovery. The Contractor shall make every effort to preserve archaeological or paleontological materials intact in their original positions, in order to

preserve the geological context and information content of the remains in relation to one another and to the enclosing soil.

The Engineer shall have the authority to suspend Project work in the area of such discovery for the purpose of preserving or recovering and documenting the archaeological or paleontological materials. The Contractor shall carry out all instructions of the Engineer for the protection of such materials, including steps to protect the site from vandalism, unauthorized investigations, accidental damage, and damage from such causes as heavy rainfall or runoff. The Contractor shall reschedule its work to minimize any loss of the time needed to complete the Project while the State evaluates, records and salvages the archaeological or paleontological materials.

Extra work ordered by the Engineer in this connection will be paid for in accordance with Articles 1.20-1.04.05 and 1.20-1.09.04. Delays caused by archaeological or paleontological preservation and protection, which the Contractor demonstrates have delayed completion of the Project, will be treated under the provisions for extension of time, Article 1.20-1.08.08.

1.20-1.10.07—Facilities Construction - Controlled and Hazardous Materials: The Department will acquire any "Hazardous Waste Generator Permit(s)" required under the Resource Conservation and Recovery Act, for the management and disposal of hazardous materials on the Site, provided that

1. such material is within the construction limits defined in the Contract, and
2. such material was not generated by the Contractor.

If the Department has designated in the Contract an area of known or suspected contamination within the Project limits, the Contractor shall dispose of such material in accordance with the relevant Special Provisions.

In the event that the Contractor encounters or exposes any material, not previously known or suspected to be contaminated, but exhibiting properties that may indicate the presence of controlled or hazardous material, the Contractor shall cease all operations in the material's vicinity and shall immediately notify the Engineer of the material's discovery. The presence of barrels, discolored earth, metal, wood, visible fumes or smoke, abnormal odors or excessively hot earth may indicate the presence of controlled or hazardous material, and the Contractor shall treat it with extreme caution.

If controlled or hazardous materials, other than those required for Contract operations, are discovered at the Site, the Department may engage a specialty contractor to handle and dispose of the materials.

When the Contractor performs support work incidental to the removal, treatment or disposal of controlled or hazardous material, the Department will pay for same at the applicable Contract unit prices. When the Contract does not include appropriate pay items for such work, the Department will pay for it in accordance with Article 1.20-1.04.05.

The Contractor shall observe all security precautions established pursuant to 29 CFR 1910.120 and 1926.65, including all revisions and amendments thereof, and shall not work in any area known to contain or suspected of containing controlled or hazardous material without prior written approval to do so from the Engineer.

The Contractor shall assume sole responsibility for the proper storage, handling,

management, and disposal of all regulated materials and wastes associated with its operations, including, but not limited to, lubricants, antifreeze, engine fluids, paints, and solvents. All costs associated with any failure by the Contractor to properly manage such materials in accordance with Federal, State and municipal regulations, and all remedial and punitive costs incurred by the Department as a result of such failure by the Contractor, shall be borne by the Contractor.

This article does not apply to coatings removed by the Contractor.

1.20-1.10.08–Facilities Construction - Vehicle Emissions: All motor vehicles and construction equipment used for the Project (both on-highway and off-road) shall comply with all Federal, State and municipal regulations concerning exhaust emission controls or safety.

The Contractor shall establish staging zones for vehicles waiting to load or unload at the Site. Such zones shall be located where the emissions from the vehicles will have minimum impact on abutting properties and the general public.

Idling of delivery trucks, dump trucks, and other equipment shall not be permitted for longer than 3 minutes during periods of non-activity, except as allowed by the Regulations of Connecticut State Agencies Section 22a-174-18(b)(3)(c):
No mobile source engine shall be allowed "*to operate for more than 3 consecutive minutes when the mobile source is not in motion, except as follows:*

1. *When a mobile source is forced to remain motionless because of traffic conditions or mechanical difficulties over which the operator has no control,*
2. *When it is necessary to operate defrosting, heating or cooling equipment to ensure the safety or health of the driver or passengers,*
3. *When it is necessary to operate auxiliary equipment that is located in or on the mobile source to accomplish the intended use of the mobile source,*
4. *To bring the mobile source to the manufacturer's recommended operating temperature,*
5. *When the outdoor temperature is below 20°F*
6. *When the mobile source is undergoing maintenance that requires such mobile source be operated for more than 3 consecutive minutes, or*
7. *When a mobile source is in queue to be inspected by U.S. military personnel prior to gaining access to a U.S. military installation.*"

The Contractor shall conduct all of its Project work in a way that causes no harm to adjacent sensitive receptors. Sensitive receptors include but are not limited to hospitals, schools, daycare facilities, elderly housing, and convalescent facilities. The Contractor shall see to it that any engine exhaust is not directed toward fresh air intakes, air conditioners, or windows.

Before performing extensive work within less than 50 ft of a sensitive receptor, the Contractor must (1) submit to the Engineer a Vehicle Emissions Mitigation plan, proposing detailed means for minimizing vehicle emissions from vehicles and construction equipment in the affected area, including a proposed sequence of construction; (2) obtain the Engineer's written approval of the Plan, making any revisions of same necessary to obtain said permission; and (3) implement the Plan, as it may have been revised.

Any costs associated with this “Vehicle Emissions” Article shall be included in the general cost of the Contract. In addition, there shall be no additional time granted to the Contractor for compliance with this Article. The Contractor’s compliance with this Article and any associated laws or regulations shall not be grounds for claims as outlined in Article 1.20-1.11.01 through 1.20-1.11.06 of these specifications.

SECTION 1.20-1.11
CLAIMS FOR
FACILITIES CONSTRUCTION

1.20-1.11.01—Facilities Construction - General
1.20-1.11.02—Facilities Construction - Notice of Claim
1.20-1.11.03—Facilities Construction - Record Keeping
1.20-1.11.04—Facilities Construction - Claim Compensation
1.20-1.11.05—Facilities Construction - Required Claim Documentation
1.20-1.11.06—Facilities Construction - Auditing of Claims

1.20-1.11.01—Facilities Construction - General: When filing a formal claim under Section 4-61 (referred to as “Section 4-61” below) of the C.G.S. (as revised), either as a lawsuit in the Superior Court or as a demand for arbitration, the Contractor must follow the procedures and comply with the requirements set forth in this Section of the Specifications. This Section does not, unless so specified, govern informal claims for additional compensation which the Contractor may bring before the Department. The Contractor should understand, however, that the Department may need, before the Department can resolve such a claim, the same kinds of documentation and other substantiation that it requires under this Section. It is the intent of the Department to compensate the Contractor for actual increased costs caused by or arising from acts or omissions on the part of the Department that violate legal or contractual duties owed to the Contractor by the Department.

1.20-1.11.02—Facilities Construction - Notice of Claim: Whenever the Contractor intends to file a formal claim against the Department under Section 4-61, seeking compensation for additional costs, the Contractor shall notify the Commissioner in writing (in strict compliance with Section 4-61) of the details of said claim. Such written notice shall contain all pertinent information described in Article 1.20-1.11.05 below.

Once formal notice of a claim under C.G.S. Section 4-61 (b) (as revised) has been given to the Commissioner, the claimant may not change the claim in any way, in either concept or monetary amount, (1) without filing a new notice of claim and demand for arbitration to reflect any such change and (2) without the minimum period of six months after filing of the new demand commencing again and running before any hearing on the merits of the claim may be held. The only exception to this limitation will be for damages that continue to accrue after submission of the notice, in ways described and anticipated in the notice.

1.20-1.11.03—Facilities Construction - Record Keeping: The Contractor shall keep daily records of all costs incurred in connection with its construction-related activities on

behalf of the Department. These daily records shall identify each aspect of the Project affected by matters related to any claim for additional compensation that the Contractor has filed, intends to file, or has reason to believe that it may file against the Department; the specific Project locations where Project work has been so affected; the number of people working on the affected aspects of the Project at the pertinent time(s); and the types and number of pieces of equipment on the Project site at the pertinent time(s). If possible, any potential or anticipated effect on the Project's progress or schedule which may result in a claim by the Contractor should also be noted contemporaneously with the cause of the effect, or as soon thereafter as possible.

1.20-1.11.04—Facilities Construction - Claim Compensation: The payment of any claim, or any portion thereof, that is deemed valid by the Engineer shall be made in accordance with the following provisions of this Article:

(a) Compensable Items: The liability of the Department for claims will be limited to the following specifically-identified items of cost, insofar as they have not otherwise been paid for by the Department, and insofar as they were caused solely by the actions or omissions of the Department or its agents (except that with regard to payment for extra work, the Department will pay to the Contractor the mark-ups provided for in Article 1.20-1.04.05):

(1) Additional Project-site labor expenses.
(2) Additional costs for materials.
(3) Additional, unabsorbed Project-site overhead (**e.g.**, for mobilization and demobilization).
(4) Additional costs for active equipment.
(5) For each day of Project delay or suspension caused solely by actions or omissions of the Department, either
    i an additional 10% of the total amount of the costs identified in Subarticles (1) through (4) above; except that if the delay or suspension period prevented the Contractor from incurring enough Project costs under Subarticles (1) through (4) during that period to require a payment by the Department that would be greater than the payment described in subparagraph ii below, then the payment for affected home office overhead and profit shall instead be made in the following *per diem* amount:
    ii 6% of the original total Contract amount divided by the original number of days of Contract time.

Payment under either subparagraph i or ii hereof shall be deemed to be complete and mutually-satisfactory compensation for any unabsorbed home office overhead and any profit related to the period of delay or suspension.

(6) Additional equipment costs. Only actual equipment costs shall be used in the calculation of any compensation to be made in response to claims for additional Project compensation. Actual equipment costs shall be based upon records kept in the normal course of business and in accordance with generally-accepted accounting principles. Under no circumstances shall Blue Book or other guide or rental rates be used for this purpose (unless the Contractor had to rent the equipment from an unrelated party, in which case the actual rental charges paid

by the Contractor, so long as they are reasonable, shall be used). Idle equipment, for instance, shall be paid for based only on its actual cost to the Contractor.

(7) Subcontractor costs limited to, and determined in accordance with, Subarticles (1), (2), (3), (4), and (5) above and applicable statutory and case law. Such subcontractor costs may be paid for by the Department only (a) in the context of an informal claims settlement or (b) if the Contractor has itself paid or legally-assumed, present unconditional liability for those subcontractor costs.

(b) Non-Compensable Items: The Department will have no liability for the following specifically-identified non-compensable items:

(1) Profit, in excess of that provided for herein.
(2) Loss of anticipated profit.
(3) Loss of bidding opportunities.
(4) Reduction of bidding capacity.
(5) Home office overhead in excess of that provided for in Subarticle 1.20-1.11.04(a)(5) hereof.
(6) Attorney's fees, claims preparation expenses, or other costs of claims proceedings or resolution.
(7) Any other consequential or indirect expenses or costs, such as tort damages, or any other form of expense or damages not provided for in these Specifications or elsewhere in the Contract.

1.20-1.11.05—Facilities Construction - Required Claim Documentation: All claims shall be submitted in writing to the Commissioner, and shall be sufficient in detail to enable the Engineer to ascertain the basis and the amount of each claim, and to investigate and evaluate each claim in detail. As a minimum, the Contractor must provide the following information for each and every claim and sub-claim asserted:

(a) A detailed factual statement of the claim, with all dates, locations and items of work pertinent to the claim.
(b) A statement of whether each requested additional amount of compensation or extension of time is based on provisions of the Contract or on an alleged breach of the Contract. Each supporting or breached Contract provision and a statement of the reasons why each such provision supports the claim, must be specifically identified or explained.
(c) Excerpts from manuals or other texts which are standard in the industry, if available, that support the Contractor's claim.
(d) The details of the circumstances that gave rise to the claim.
(e) The date(s) on which any and all events resulting in the claim occurred, and the date(s) on which conditions resulting in the claim first became evident to the Contractor.
(f) Specific identification of any pertinent document, and detailed description of the substance of any material oral communication, relating to the substance of such claim.
(g) If an extension of time is sought, the specific dates and number of days for which it is sought, and the basis or bases for the extension sought. A critical path

method, bar chart, or other type of graphical schedule that supports the extension must be submitted.

(h) When submitting any claim over $50,000, the Contractor shall certify in writing, under oath and in accordance with the formalities required by the contract, as to the following:

(1) That supporting data is accurate and complete to the Contractors best knowledge and belief;

(2) That the amount of the dispute and the dispute itself accurately reflects what the Contractor in good faith believes to be the Departments liability;

(3) The certification shall be executed by:

a. If the Contractor is an individual, the certification shall be executed by that individual.

b. If the Contractor is not an individual, the certification shall be executed by a senior company official in charge at the Contractor's plant or location involved or an officer or general partner of the Contractor having overall responsibility for the conduct of the Contractors affairs.

1.20-1.11.06—Facilities Construction - Auditing of Claims: All claims filed against the Department shall be subject to audit by the Department or its agents at any time following the filing of such claim. The Contractor and its subcontractors and suppliers shall cooperate fully with the Department's auditors. Failure of the Contractor**,** its subcontractors, or its suppliers to maintain and retain sufficient records to allow the Department or its agents to fully evaluate the claim shall constitute a waiver of any portion of such claim that cannot be verified by specific, adequate, contemporaneous records, and shall bar recovery on any claim or any portion of a claim for which such verification is not produced. Without limiting the foregoing requirements, and as a minimum, the Contractor shall make available to the Department and its agents the following documents in connection with any claim that the Contractor submits:

(1) Daily time sheets and project superintendent's daily reports.
(2) Union agreements, if any.
(3) Insurance, welfare, and benefits records.
(4) Payroll register.
(5) Earnings records.
(6) Payroll tax returns.
(7) Records of property tax payments.
(8) Material invoices, purchase orders, and all material and supply acquisition contracts.
(9) Materials cost distribution worksheets.
(10) Equipment records (list of company equipment, rates, etc.).
(11) Vendor rental agreements
(12) Subcontractor invoices to the Contractor, and the Contractor's certificates of payments to subcontractors
(13) Subcontractor payment certificates.
(14) Canceled checks (payroll and vendors).
(15) Job cost reports.

(16) Job payroll ledger.
(17) General ledger, general journal (if used), and all subsidiary ledgers and journals, together with all supporting documentation pertinent to entries made in these ledgers and journals.
(18) Cash disbursements journals.
(19) Financial statements for all years reflecting the operations on the Project.
(20) Income tax returns for all years reflecting the operations on the Project.
(21) Depreciation records on all company equipment**,** whether such records are maintained by the company involved, its accountant, or others.
(22) If a source other than depreciation records is used to develop costs for the Contractor's internal purposes in establishing the actual cost of owning and operating equipment, all such other source documents.
(23) All documents which reflect the Contractor's actual profit and overhead during the years that the Project was being performed**,** and for each of the five years prior to the commencement of the Project.
(24) All documents related to the preparation of the Contractor's bid, including the final calculations on which the bid was based.
(25) All documents which relate to the claim or to any sub-claim, together with all documents that support the amount of damages as to each claim or sub-claim.
(26) Worksheets used to prepare the claim, which indicate the cost components of each item of the claim, including but not limited to the pertinent costs of labor, benefits and insurance, materials, equipment, and subcontractors' damages, as well as all documents which establish the relevant time periods, individuals involved, and the Project hours and the rates for the individuals.
(27) The name, function, and pertinent activity of each Contractor's or subcontractor's official, or employee involved in or knowledgeable about events that give rise to, or facts that relate to, the claim.
(28) The amount(s) of additional compensation sought and a break-down of the amount(s) into the categories specified as payable under Article 1.20-1.11.04 above.
(29) The name, function, and pertinent activity of each Department official, employee or agent involved in or knowledgeable about events that give rise to, or facts that relate to, the claim.

SECTION 1.20-9.75
MOBILIZATION FOR
FACILITIES CONSTRUCTION

1.20-9.75.01—Facilities Construction - Mobilization Description
1.20-9.75.04—Facilities Construction - Mobilization Method of Measurement

1.20-9.75.01—Facilities Construction - Mobilization Description: This item consists of:

1. all work necessary for moving Project personnel and equipment to the Project Site;
2. all work necessary for the establishment of the Contractors' field offices,

buildings and other facilities necessary for Contract performance;

3. the preparation of work plans and other documents that must be submitted by the Contractor to the Department prior to the start of physical Project construction. These initial submittals are identified elsewhere in the Contract and may include Project schedules, Project management plans, staging and storage areas, safety plans, quality control plans, erosion and sedimentation control plans, and other documents addressing general Project sequencing or management;
4. demobilization of plant and equipment;
5. completion of all physical work, and
6. completion of administrative closeout items as required by the Contract.

1.20-9.75.04—Facilities Construction - Mobilization Method of Measurement: Mobilization as defined in Article 1.20-1.03.01 will be paid in the manner described hereinafter; however, the determination of the total Contract amount earned shall not include the amount of mobilization earned during the period covered by the current monthly estimate – but shall include amounts previously earned and certified for payment:

1. When the first payment estimate is made, 25% of the “Mobilization” line item will be certified for payment.
2. When the Baseline Schedule, as specified under Article 1.20-1.05.08, is accepted, 50% of the “Mobilization” line item, minus any previous payments, will be certified for payment.
3. When 10% of the total original Contract price is earned and the Baseline Schedule, as specified under Article 1.20-1.05.08, is accepted, 75% of the “Mobilization” line item, minus any previous payments, will be certified for payment.
4. When 30% of the total original Contract price is earned and the Baseline Schedule, as specified under Article 1.20-1.05.08, is accepted, 100% of the “Mobilization” line item, minus any previous payments, will be certified for payment.

Project Closeout as defined in Article 1.20-1.03.01 shall include demobilization of plant and equipment, completion of all physical work, and administrative closeout items necessary to satisfy all Contract requirements. Project Closeout will be paid in the manner described hereinafter:

- When the non-administrative Project completion requirements (as specified under Article 1.20-1.08.13) and the administrative completion requirements (as specified under Article 1.20-1.08.14) have been satisfied, 100%t of the “Project Closeout” line item will be certified for payment.

CONNECTICUT
SUPPLEMENTAL SPECIFICATION
SECTION 2.02
ROADWAY EXCAVATION, FORMATION OF EMBANKMENT AND DISPOSAL OF SURPLUS MATERIAL

2.02.01—Description:

In the first sentence, insert ", swales" *between* "channels" *and* "and other miscellaneous construction to the ..."

2.02.03—Construction Methods:

In the second paragraph under Subarticle 6. "Compaction" *add the following after the first sentence:*

" Field testing will be performed in accordance with AASHTO T 310 and ASTM D6938 as indicated in the latest edition of the 'Minimum Schedule for Acceptance Testing.'"

2.02.04—Method of Measurement:

In the second to last Paragraph, replace the last sentence with the following:

"Bituminous parking areas are considered as bituminous concrete pavement."

CONNECTICUT
SUPPLEMENTAL SPECIFICATION
SECTION 2.05
TRENCH EXCAVATION

2.05.01—Description:

In Paragraph 2, delete the only sentence and replace with the following:

"2) The removal of stormwater drainage structures, stormwater pipes and appurtenances beyond the limits of the roadway and structure excavation."

In Subarticle 2, Rock in Trench, delete the only sentence and replace with the following:

"(2) Rock, insofar as it applies to trench excavation, shall be defined as rock in definite ledge formation, boulders, or portions of boulders, cement masonry structures, concrete structures, reinforced concrete pipe, Portland cement concrete pavement or base, of 1/2 cubic yard (0.5 cubic meters) or more in volume, removed as indicated or directed from within the payment lines for trench excavation."

2.05.04—Method of Measurement:

In the first sentence under **Horizontal Payment Limits** *insert* "culvert ends," *between* "pipe culverts," *and* "pipe arches,"

2.05.05—Basis of Payment:

*In Paragraph 13 - Delete the entire sentence "*There will be no direct payment for the plugging of existing pipes...*" and replace it with the following:*

"There will be no direct Payment for the plugging of existing pipes, removal and disposal of metal or plastic pipes or for the breaking up of floors in drainage structures being abandoned. The cost shall be included in the contract unit prices of the drainage and excavation items."

CONNECTICUT
SUPPLEMENTAL SPECIFICATION
SECTION 2.11
ANTI-TRACKING PAD

Add the following Section:

SECTION 2.11
ANTI-TRACKING PAD

2.11.01—Description
2.11.02—Materials
2.11.03—Construction Methods
2.11.04—Method of Measurement
2.11.05—Basis of Payment

2.11.01—Description: This work shall consist of furnishing, installing, maintaining and removing a crushed stone anti-tracking pad on geotextile filter fabric. All areas affected by the anti-tracking pad shall be restored to the original or plan contours. If shown on the plans or ordered by the Engineer, the restored areas shall be stabilized with turf establishment.

2.11.02—Materials:
The crushed stone shall meet the grading requirements of Article M.01.01 for 2-in (50 mm) (No. 3) coarse aggregate.
Geotextile filter fabric shall meet the requirements of Section 7.55 and Subarticle M.08.01-19.
Topsoil, if necessary, shall meet the requirements of Article M.13.01.
Seed, if necessary, shall meet the requirements of Article M.13.04.
Fertilizer, if necessary, shall meet the requirements of Article M.13.03.
Mulch, if necessary, shall meet the requirements of Article M.13.05

2.11.03—Construction Methods: Clear area of anti-tracking pad of all vegetation and excavate to a minimum depth of 4 in (100 mm). Place geotextile filter fabric over the full width and length of excavated area and cover with No. 3 crushed stone to a minimum depth of 4 in (100 mm).
The anti-tracking pad shall be uniformly graded to produce the entry and exit path to the Site for all construction equipment. The pad shall be maintained of sufficient grading and stone surface to capture all soils and sediment from equipment tires prior to such exiting from the site.
Crushed stone shall be replenished or replaced as necessary or as ordered by the Engineer to assure sufficient capture of sediment at the construction site. Any sediment or crushed stone tracked off the site shall be immediately cleaned, swept and removed by the Contractor at no cost to the State.

2.11.04—Method of Measurement: This work will be measured for payment by the number of square yards (square meters) of accepted anti-tracking pad completed as shown on the plans or as ordered by the Engineer.

2.11.05—Basis of Payment: Payment for this work will be made at the Contract unit price per square yard (square meter) for “Anti-Tracking Pad,” which shall include furnishing and placing all material, including the geotextile; for maintaining the anti-tracking pad during the Project construction period; for removing the anti-tracking pad after completion of the Project; for restoring the site, including any required turf establishment; and for all labor, equipment, tools, and incidentals required to complete the work as well as the cleaning and sweeping of any sediment or crushed stone tracked off site.

Clearing and grubbing required to install the anti-tracking pad will be paid under the item "Clearing and Grubbing."

Pay Item	Pay Unit
Anti-Tracking Pad	s.y. (s.m.)

CONNECTICUT
SUPPLEMENTAL SPECIFICATION
SECTION 2.12
SUBBASE

2.12.02—Materials:

Delete the second sentence: "Grading 'B' shall be used."

2.12.03—Construction Methods:

At the end of the third paragraph add the following:

" Field testing will be performed in accordance with AASHTO T 310 and ASTM D6938 as indicated in the latest edition of the 'Minimum Schedule for Acceptance Testing.'"

CONNECTICUT
SUPPLEMENTAL SPECIFICATION
SECTION 2.16
PERVIOUS STRUCTURE BACKFILL

2.16.01—Description:

Add the following sentence after the only sentence:

"This item shall also consist of furnishing and placing crushed stone or gravel in permeable material bags at the inlet ends of weep holes in structures to the dimensions indicated on the plans or as ordered by the Engineer."

2.16.02—Materials:

Add the following paragraph after the only sentence:

" The materials for bagged stone shall meet to the following requirements:

1. The crushed stone or gravel shall conform to the grading requirements of Article M.01.01 for No. 3 or No. 4 coarse aggregate or a mixture of both.
2. The bag shall be of permeable material sized to contain 1 c.f. (0.03 cu.m) of loosely packed granular material."

2.16.03—Construction Methods:

Add the following sentence at the end of the eighth paragraph:

" Field testing will be performed in accordance with AASHTO T 310 and ASTM D6938 as indicated in the latest edition of the 'Minimum Schedule for Acceptance Testing.'"

Add the following paragraph:

" Where weep holes are installed, bagged stone shall be placed around the inlet end of each weep hole, to prevent movement of the pervious material into the weep hole. Approximately 1 c.f. (0.03 cu.m) of crushed stone or gravel shall be enclosed in each of the permeable material bags. All bags shall then be securely tied at the neck with cord or wire so that the enclosed material is contained loosely. The filled bags shall be stacked at the weep holes to the dimensions shown on the plans or as directed by the Engineer. The bags shall be unbroken at the time pervious material is placed around them, and bags which are broken or burst prior to or during the placing of the pervious material shall be replaced at the Contractor's expense."

2.16.04—Method of Measurement:

Add the following paragraph after the only paragraph:

“ There will be no direct payment for bagged stone, but the cost thereof shall be included in the cost of the work for “Pervious Structure Backfill.””

CONNECTICUT
SUPPLEMENTAL SPECIFICATION
SECTION 2.18
SEDIMENTATION CONTROL BALES

Delete the entire section.

CONNECTICUT
SUPPLEMENTAL SPECIFICATION
SECTION 2.19
SEDIMENTATION CONTROL SYSTEM

2.19.02—Materials:

Delete the entire article and replace with the following:

" **2.19.02—Materials:** The sedimentation control system materials for this work shall meet the following requirements:

Hay bales shall be made of hay with 40 lb. (18 kg) minimum weight, and 120 lb. (54 kg) maximum weight, held together by twine or wire.

Geotextile shall meet the requirements of Sections 7.55 and M.08."

2.19.03—Construction Methods:

Delete the entire article and replace with the following:

" **2.19.03—Construction Methods:** Sedimentation Control Systems shall be installed by the Contractor in locations shown on the plans or as directed by the Engineer.

Hay bale systems shall be installed lengthwise along the contour with ends of adjacent bales tightly abutting each other. All hay bales shall be installed so that bindings are oriented around the sides, rather than along the tops and bottoms. Each hay bale shall be entrenched 4 in (100 mm) deep and backfilled, with the backfilled soil placed toward the potential silt source. They shall be held in place by 2 wooden stakes in each hay bale and each wooden stake shall be driven 18 in (450 mm) deep into the ground. Gaps shall be filled with hay or straw to prevent water or debris escaping between bales.

Geotextile systems shall be installed along the contour so that the bottom 6 in of the fabric is buried by either trenching or by laying the 6-in (150 mm) section horizontally on the ground and burying by ramping the soil up to the control fence. All geotextile fences shall be exposed at least 30 high as installed. Spacing between posts shall not exceed 10 ft (3m) and all wooden posts shall be driven a minimum of 12 in (300 mm) deep into the ground. When joints between sections of geotextile sedimentation control systems are necessary, geotextile shall be spliced together only at a support post, with a minimum 6-in (150 mm) overlap, and securely sealed.

When trench excavation of a hay bale or geotextile fence is obstructed by an occasional stone or tree root, provide a smooth transition between the trench bottom and the obstruction.

Clean out of accumulated sediment shall be accomplished when half of the original height of the hay bales or geotextile fence as installed becomes filled with sediment, or as directed by the Engineer.

Hay bales or geotextile fence systems shall be maintained or replaced until they are no longer necessary for the purpose intended or are ordered removed from the Site at

the completion of the Project when full stabilization has occurred, unless specifically authorized by the Engineer to be left in place."

2.19.05—Basis of Payment:

Change the last sentence to read as follows:

" No additional payment will be made for the clean out of accumulated sediment."

CONNECTICUT
SUPPLEMENTAL SPECIFICATION
SECTION 3.02
ROLLED GRANULAR BASE

Delete the entire article.

CONNECTICUT
SUPPLEMENTAL SPECIFICATION
SECTION 3.03
CONCRETE BASE

Delete the entire article.

CONNECTICUT
SUPPLEMENTAL SPECIFICATION
SECTION 3.04
PROCESSED AGGREGATE BASE

Delete the entire Section and replace it with the following:

" **3.04.01—Description:** The base shall consist of a foundation constructed on the prepared subbase or subgrade in accordance with these specifications and in conformity with the lines, grades, compacted thickness and typical cross-section as shown on the plans.

3.04.02—Materials: All materials for this work shall conform to the requirements of Article M.05.01.

3.04.03—Construction Methods: Only one type of coarse aggregate shall be used on a Project unless otherwise permitted by the Engineer.

Prior to placing the processed aggregate base, the prepared subbase or subgrade shall be maintained true to line and grade, for a minimum distance of 200 ft (60 m) in advance of the work. None of the aggregate courses shall be placed more than 500 ft (150 m) ahead of the compaction and binding operation on that particular course.

The processed aggregate base shall be spread uniformly by a method approved by the Engineer. The thickness of each course shall not be more than 4 in (100 mm) after compaction, unless otherwise ordered.

After the aggregate is spread, it shall be thoroughly compacted and bound by use of equipment specifically manufactured for that purpose. Rollers shall deliver a ground pressure of not less than 300 lbs/in (52.5 N/mm) of contact width and shall have a weight (mass) not less than 10 t (9100 kg). Vibratory units shall have a static weight (mass) of not less than 4 t (3650 kg). Water may be used during the compaction and binding operation and shall be applied from an approved watering device. The compacting and binding operation shall begin at the outside edges, overlapping the shoulders for a distance of not less than 6 in (150 mm) and progress towards the middle, parallel with the centerline of the pavement. The work shall cover the entire surface of the course with uniform overlapping of each preceding track or pass. Areas of super-elevation and special cross slope shall be compacted by beginning at the lowest edge and proceeding towards the higher edge, unless otherwise directed by the Engineer. The compacting and binding operation shall be continued until the voids in the aggregates have been reduced to provide a firm and uniform surface satisfactory to the Engineer. The amount of compactive effort shall in no case shall be less than four (4) complete passes of the compacting and binding operations. All aggregate shall be completely compacted and bound at the end of each day's work or when traffic is to be permitted to operate on the road. The dry density of each layer of processed aggregate base after compaction shall not be less than ninety-five percent (95%) of the dry density

for that material when tested in accordance with AASHTO T180, Method D. Field testing will be performed in accordance with AASHTO T 310 and ASTM D6938 as indicated in the latest edition of the "Minimum Schedule of Acceptance Testing."

Should the subbase or subgrade material become churned up or mixed with the processed aggregate base at any time, the Contractor shall, without additional compensation remove the mixture. The Contractor shall add new subbase material, if required, and reshape and recompact the subbase in accordance with the requirements of Article 2.12.03. New aggregate material shall be added, compacted and bound, as hereinbefore specified, to match the surrounding surface.

Any surface irregularities which develop during, or after work on each course, shall be corrected by loosening material already in place and removing or adding aggregate as required. The entire area, including the surrounding surface, shall be re-compacted and rebound until it is brought to a firm and uniform surface satisfactory to the Engineer.

3.04.04—Method of Measurement: Processed Aggregate Base will be measured horizontally in-place after final grading and compaction. Materials placed beyond the horizontal limits indicated on the plans will not be measured for payment.

The total thickness shall be as indicated on the plans, or as ordered by the Engineer and within a tolerance of minus three-fourths of an inch (-$^{3}/_{4}$") to plus one-half inch (+ $^{1}/_{2}$") (-19 mm to +13 mm).

Measurements to determine the thickness will be taken by the Engineer at intervals of 500 ft (150 m) or less, along lanes, and shall be considered representative of the lane. For the purpose of these measurements, a shoulder will be considered a lane.

If a thickness measurement is taken and found deficient, additional measurements considered necessary by the Engineer will be taken to determine the longitudinal limits of the deficiency. Areas not within allowable tolerances shall be corrected, as ordered by the Engineer, without additional compensation to the Contractor.

3.04.05—Basis of Payment: This work will be paid for at the Contract unit price per cubic yard (cubic meter) for "Processed Aggregate Base," complete in place, which price shall include all materials, tools, equipment and work incidental thereto.

Pay Item	Pay Unit
Processed Aggregate Base	c.y. (cu.m)"

CONNECTICUT
SUPPLEMENTAL SPECIFICATION
SECTION 4.01
CONCRETE FOR PAVEMENT

Article 4.01.03—Construction Methods:

Replace Subarticle A. "Composition" with the following:

" **A. Material Documentation, Transportation and Testing:** All material delivered to the Project shall be documented, transported and testing in accordance with Subarticle 6.01.03-3 Transportation and Delivery of Concrete and Subarticle 6.01.03-4 Acceptance Testing and Test Specimens. The plastic properties for concrete pavement shall conform to the standard mix properties as indicated in Subarticle 6.01.03-4a.
In addition, the air content of the plastic concrete shall be determined in accordance with AASHTO Method T152, Pressure Method. No alternative method is acceptable."

Delete Subarticles B, C, D and E.

Change Subarticle F "Placing Concrete" to be Subarticle B and as follows:

Article 4.01.03-B. Placing Concrete:

3. Placement:

In the last sentence of the first paragraph, change "... tested in accordance with 4.01.03-I ..." *to read* "... tested in accordance with Subarticle 4.01.03-D ..."

6. Joints:
(e) Load Transfer Devices:

Change the only sentence as follows:

"Load transfer devices shall conform to the requirements of Article M.03.08."

7. Curing:

(a) Liquid Membrane-Forming Cure:

Change the first sentence as follows:

"The liquid curing compound shall conform to Subarticle M.03.04-3."

(b) Moist Curing:

Change the end of the first sentence as follows:

"... moist mats of the size and quality specified in Subarticle M.03.04-2."

(c) Cover Sheet Curing:

Change the end of the first sentence as follows:

"... paper or polyethylene cover sheets conforming to Subarticle M.03.04-4."

Change Subarticle G "Protection of Pavement" to be Subarticle C.

Change Subarticle H "Riding Surface Tests" to be Subarticle D.

Change Subarticle I "Flexural Testing of Concrete" to be Subarticle E.

Change Subarticle J "Opening to Traffic" to be Subarticle F.

CONNECTICUT
SUPPLEMENTAL SPECIFICATION
SECTION 4.03
COLD RECLAIMED ASPHALT PAVEMENT

Delete the entire section.

CONNECTICUT
SUPPLEMENTAL SPECIFICATION
SECTION 4.06
BITUMINOUS CONCRETE

Delete the entire Section and replace it with the following:

SECTION 4.06
BITUMINOUS CONCRETE

4.06.01—Description
4.06.02—Materials
4.06.03—Construction Methods
4.06.04—Method of Measurement
4.06.05—Basis of Payment

4.06.01—Description: Work under this Section shall include the production, delivery and placement of a non-segregated, smooth and dense bituminous concrete mixture brought to proper grade and cross section. This Section shall also include the method and construction of longitudinal joints. The Contractor shall furnish ConnDOT with a Quality Control Plan (QCP) as described in Article 4.06.03.

The following terms as used in this specification are defined as:

Bituminous Concrete: A concrete material that uses a bituminous material (typically asphalt) as the binding agent and stone and sand as the principal aggregate components. Bituminous concrete may also contain any of a number of additives engineered to modify specific properties and/or behavior of the concrete material. For the purposes of this Section, references to bituminous concrete apply to all of its sub-categories, for instance those defined on the basis of production and placement temperatures, such as hot-mix asphalt (HMA) or warm-mix asphalt (WMA), or those defined on the basis of composition, such as those containing polymer-modified asphalt (PMA).

Course: A lift or multiple lifts comprised of the same bituminous concrete mixture placed as part of the pavement structure.

Density Lot: All material placed in a single lift and as defined in Article 4.06.03.

Disintegration: Wearing away or fragmentation of the pavement. Disintegration will be evident in the following forms: Polishing, weathering-oxidizing, scaling, spalling, raveling, potholes or loss of material.

Dispute Resolution: A procedure used to resolve conflicts resulting from discrepancies between the Engineer and the Contractor's density results that may affect payment.

Hot Mix Asphalt (HMA): A bituminous concrete mixture typically produced at 325°F.

Lift: An application of a bituminous concrete mixture placed and compacted to a specified thickness in a single paver pass.

Polymer Modified Asphalt (PMA): A bituminous concrete mixture containing a polymer modified asphalt binder in accordance with contract specifications. All PMA mixtures shall incorporate a qualified warm mix technology.

Production Lot: All material placed during a continuous daily paving operation.

Quality Assurance (QA): All those planned and systematic actions necessary to provide confidence that a product or facility will perform as designed.

Quality Control (QC): The sum total of activities performed by the vendor (Producer,

Manufacturer, and Contractor) to ensure that a product meets contract requirements.
Superpave: A bituminous concrete mix design used in mixtures designated as “S*” Where “S” indicates Superpave and * indicates the sieve related to the nominal maximum aggregate size of the mix.
Segregation: A non-uniform distribution of a bituminous concrete mixture in terms of gradation, temperature, or volumetric properties.
Warm Mix Asphalt (WMA): A bituminous concrete mixture that can be produced and placed at reduced temperatures than HMA using a qualified additive or technology.

4.06.02—Materials: All materials shall meet the requirements of Section M.04.

1. Materials Supply: The bituminous concrete mixture must be from 1 source of supply and originate from 1 Plant unless authorized by the Engineer. Bituminous Concrete plant Quality Control Plan (QCP) requirements are defined in Section M.04.

2. Recycled Materials: Reclaimed Asphalt Pavement (RAP), Crushed Recycled Container Glass (CRCG), Recycled Asphalt Shingles (RAS), or crumb rubber (CR) from recycled tires may be incorporated in bituminous concrete mixtures in accordance with Section M.04 and Project Specifications. CRCG and RAS shall not be used in the surface course.

4.06.03—Construction Methods:

1. Material Documentation: All vendors producing bituminous concrete must have their truck-weighing scales, storage scales, and mixing plant automated to provide a detailed ticket which shall be given to the Engineer. Delivery tickets shall include the following information:

a. State of Connecticut printed on ticket.
b. Name of producer, identification of plant, and specific storage bin (silo) if used.
c. Date and time of day.
d. Mixture Designation; Mix type and level. Curb mixtures for machine-placed curbing must state "curb mix only."
e. If RAP is used, the plant printouts shall include the RAP dry weight, percentage and daily moisture content.
f. If RAS is used, the plant printouts shall include the RAS dry weight and percentage daily moisture content.
g. The delivery ticket for all mixes produced with Warm Mix Technology must indicate the additive name, and the injection rate (water or additive) incorporated at the HMA plant. The delivery ticket for all mixes produced with pre-blended WMA additive must indicate the name of the WMA Technology.
h. Net weight (mass) of mixture loaded into truck (When RAP and/or RAS is used the moisture content shall be excluded from mixture net weight).
i. Gross weight (Either equal to the net weight plus the tare weight or the loaded scale weight).
j. Tare weight of truck – Daily scale weight.
k. Project number, purchase order number, name of Contractor (if Contractor other than Producer).
l. Truck number for specific identification of truck.
m. Individual aggregate, Recycled Materials, and virgin asphalt high/target/low weights. For drum plants and silo loadings, the plant printouts shall be produced at 5 minute intervals maintained by the vendor for a period of 3 years after the completion of the Project.

n. For every mixture designation the running daily total delivered and sequential load number.

The net weight of mixture loaded into the truck must be equal to the cumulative measured weight of its components.

The Contractor must notify the Engineer immediately if, during the production day, there is a malfunction of the weighing or recording system in the automated plant or truck-weighing scales. Manually written tickets containing all required information will be allowed for 1 hour, but for no longer, provided that each load is weighed on State-approved scales. At the Engineer's sole discretion, trucks may be approved to leave the plant if a State inspector is present to monitor weighing. If such a malfunction is not fixed within 48 hours, mixture will not be approved to leave the plant until the system is fixed to the Engineer's satisfaction. No damages will be considered should the State be unable to provide an inspector at the plant.

The State reserves the right to have an inspector present to monitor batching and/or weighing operations

2. Transportation of Mixture: Trucks with loads of bituminous concrete being delivered to State projects must not exceed the statutory or permitted load limits referred to as gross vehicle weight (GVW). The Contractor shall furnish a list of all vehicles and allowable weights transporting mixture.

The State reserves the right to check the gross and tare weight of any delivery truck. A variation of 0.4% or less in the gross or tare weight shown on the delivery ticket and the certified scale weight shall be considered evidence that the weight shown on the delivery ticket is correct. If the gross or tare weight varies from that shown on the delivery ticket by more than 0.4%, the Engineer will recalculate the net weight. The Contractor shall take action to correct the discrepancy to the satisfaction of the Engineer.

If a truck delivers mixture to the Project and the ticket indicates that the truck is overweight, the load will not be rejected but a "Measured Weight Adjustment" will be taken in accordance with Article 4.06.04.

The mixture shall be transported from the mixing plant in trucks that have previously been cleaned of all foreign material and that have no gaps through which mixture might inadvertently escape. The Contractor shall take care in loading trucks uniformly so that segregation is minimized. Loaded trucks shall be tightly covered with waterproof covers acceptable to the Engineer. Mesh covers are prohibited. The front and rear of the cover must be fastened to minimize air infiltration. The Contractor shall assure that all trucks are in conformance with this specification. Trucks found not to be in conformance shall not be allowed to be loaded until re-inspected and found satisfactory to the Engineer.

Truck body coating and cleaning agents must not have a deleterious effect on the transported mixture. The use of solvents or fuel oil, in any concentration, is strictly prohibited for the coating of the inside of truck bodies. When acceptable coating or agents are applied, truck bodies shall be raised immediately prior to loading to remove any excess agent in an environmentally acceptable manner.

3. Paving Equipment: The Contractor shall have the necessary paving and compaction equipment at the Project Site to perform the work. All equipment shall be in good working order and any equipment that is worn, defective or inadequate for performance of the work shall be repaired or replaced by the Contractor to the satisfaction of the Engineer. During the paving operation, the use of solvents or fuel oil, in any concentration, is strictly prohibited as a release agent or cleaner on any paving equipment (i.e., rollers, pavers, transfer devices).

Refueling of equipment is prohibited in any location on the paving Project where fuel might come in contact with bituminous concrete mixtures already placed or to be placed. Solvents for use in cleaning mechanical equipment or hand tools shall be stored clear of areas paved or to be paved. Before any such equipment and tools are cleaned, they shall be moved off the paved or to be paved area; and they shall not be returned for use until after they have been allowed to dry.

Pavers: Each paver shall have a receiving hopper with sufficient capacity to provide for a uniform spreading operation and a distribution system that places the mix uniformly, without segregation. The paver shall be equipped with and use a vibratory screed system with heaters or burners. The screed system shall be capable of producing a finished surface of the required evenness and texture without tearing, shoving, or gouging the mixture. Pavers with extendible screed units as part of the system shall have auger extensions and tunnel extenders as necessary. Automatic screed controls for grade and slope shall be used at all times unless otherwise authorized by the Engineer. The controls shall automatically adjust the screed to compensate for irregularities in the preceding course or existing base. The controls shall maintain the proper transverse slope and be readily adjustable, and shall operate from a fixed or moving reference such as a grade wire or floating beam.

Rollers: All rollers shall be self-propelled and designed for compaction of bituminous concrete. Rollers types shall include steel-wheeled, pneumatic or a combination thereof and may be capable of operating in a static or dynamic mode. Rollers that operate in a dynamic mode shall have drums that use a vibratory or oscillatory system or combination of. The vibratory system achieves compaction through vertical amplitude forces. Rollers with this system shall be equipped with indicators that provide the operator with amplitude, frequency and speed settings/readouts to measure the impacts per foot during the compaction process. The oscillatory system achieves compaction through horizontal shear forces. Rollers with this system shall be equipped with frequency indicators. Rollers can operate in the dynamic mode using the oscillatory system on concrete structures such as bridges and catch basins if at the lowest frequency setting.

Pneumatic tire rollers shall be self-propelled and equipped with wide-tread compaction tires capable of exerting an average contact pressure from 60 to 90 lb./in^2 uniformly over the surface, adjusting ballast and tire inflation pressure as required. The Contractor shall furnish evidence regarding tire size; pressure and loading to confirm that the proper contact pressure is being developed and that the loading and contact pressure is uniform for all wheels.

Lighting: For paving operations, which will be performed during hours of darkness, the paving equipment shall be equipped with lighting fixtures as described below, or with approved lighting fixtures of equivalent light output characteristics. Lighting shall maximize the illumination on each task and minimize glare to passing traffic. The Contractor shall provide generators on rollers and pavers of the type, size, and wattage, to adequately furnish electric power to operate the specified lighting equipment. The lighting options and minimum number of fixtures are listed in Tables 4.06-1 and 4.06-2.

Material Transfer Vehicle (MTV): A MTV shall be used when placing a bituminous concrete surface course as indicated in the contract documents. A surface course is defined as the total thickness of the same bituminous concrete mix that extends up to and includes the final wearing surface whether it is placed in a single or multiple lifts, and regardless of any time delays between lifts.

The MTV must be a self-propelled vehicle specifically designed for the purpose of delivering the bituminous concrete mixture from the delivery truck to the paver. The

TABLE 4.06-1: Paver Lighting

Option	Fixture Configuration	Fixture Quantity	Requirement
1	Type A	3	Mount over screed area
	Type B (narrow) or Type C (spot)	2	Aim to auger and guideline
	Type B (wide) or Type C (flood)	2	Aim 25 feet behind paving machine
2	Type D Balloon	2	Mount over screed area

Type A: Fluorescent fixture shall be heavy-duty industrial type. Each fixture shall have a minimum output of 8,000 lumens. The fixtures shall be mounted horizontally, and be designed for continuous row installation.
Type B: Each floodlight fixture shall have a minimum output of 18,000 lumens.
Type C: Each fixture shall have a minimum output of 19,000 lumens.
Type D: Balloon light: Each balloon light fixture shall have a minimum output of 50,000 lumens, and emit light equally in all directions.

TABLE 4.06-2: Roller Lighting

Option	Fixture Configuration*	Fixture Quantity	Requirement
1	Type B (wide)	2	Aim 50 feet in front of and behind roller
	Type B (narrow)	2	Aim 100 feet in front of and behind roller
2	Type C (flood)	2	Aim 50 feet in front of and behind roller
	Type C (spot)	2	Aim 100 feet in front of and behind roller
3	Type D Balloon	1	Mount above the roller

*All fixtures shall be mounted above the roller.
Type B: Each floodlight fixture shall have a minimum output of 18,000 lumens.
Type C: Each fixture shall have a minimum output of 19,000 lumens.
Type D: Balloon light: Each balloon light fixture shall have a minimum output of 50,000 lumens, and emit light equally in all directions.

MTV must continuously remix the bituminous concrete mixture throughout the placement process.

The use of a MTV will be subject to the requirements stated in Article 1.07.05- Load Restrictions. The Engineer may limit the use of the vehicle if it is determined that the use of the MTV may damage highway components, utilities, or bridges. The Contractor shall submit to the Engineer at time of pre-construction the following information:

1. The make and model of the MTV to be used.
2. The individual axle weights and axle spacing for each separate piece of paving equipment (haul vehicle, MTV and paver).
3. A working drawing showing the axle spacing in combination with all 3 pieces of equipment that will comprise the paving echelon.

4. Test Section: The Engineer may require the Contractor to place a test section whenever the requirements of this Section or Section M.04 are not met.

The Contractor shall submit the quantity of mixture to be placed and the location of the test section for review and acceptance by the Engineer. The equipment used in the construction of a passing test section shall be used throughout production.

If a test section fails to meet specifications, the Contractor shall stop production, make

necessary adjustments to the job mix formula, plant operations, or procedures for placement and compaction. The Contractor shall construct test sections, as allowed by the Engineer, until all the required specifications are met. All test sections shall also be subject to removal as set forth in Article 1.06.04.

5. Transitions for Roadway Surface: Transitions shall be formed at any point on the roadway where the pavement surface deviates, vertically, from the uniform longitudinal profile as specified on the plans. Whether formed by milling or by bituminous concrete mixture, all transition lengths shall conform to the criteria below unless otherwise specified.

Permanent Transitions: A permanent transition is defined as any transition that remains as a permanent part of the work. All permanent transitions, leading and trailing ends shall meet the following length requirements:

Posted Speed Limit or Structure	Permanent Transition Length Required
> 35 mph	30 feet per inch of vertical change (thickness)
35 mph or less	15 feet per inch of vertical change (thickness)
Bridge overpass	75 feet before / after end expansion joint
Bridge underpass	75 feet before / after parapet face

In areas where it is impractical to use the above described permanent transition lengths the use of a shorter permanent transition length may be permitted when approved by the Engineer.

Temporary Transitions: A temporary transition is defined as a transition that does not remain a permanent part of the work.

All temporary transitions shall meet the following length requirements:

Posted Speed Limit	Temporary Transition Length Required
> 50 mph	Leading Transition: 15 feet per inch of vertical change (thickness) Trailing Transition: 6 feet per inch of vertical change (thickness)
40, 45 or 50 mph	Leading and Trailing: 4 feet per inch of vertical change (thickness)
35 mph or less	Leading and training: 3 feet per inch of vertical change (thickness)

Note: Any temporary transition to be in place over the winter shutdown period or during extended periods of inactivity (more than 14 calendar days) shall conform to the greater than 50 MPH requirements shown above.

6. Spreading and Finishing of Mixture: Prior to the placement of the bituminous concrete, the underlying base course shall be brought to the plan grade and cross section within the allowable tolerance. Immediately before placing the mixture, the area to be surfaced shall be cleaned by sweeping or by other means acceptable to the Engineer. The bituminous concrete mixture shall not be placed whenever the surface is wet or frozen. The Engineer will verify the mix temperature by means of a probe or infrared type of thermometer. A probe type thermometer, verified by the Department on

an annual basis, must be used in order to reject a load of mixture based on temperatures outside the range stated in the placement QCP.

Placement: The bituminous concrete mixture shall be placed and compacted to provide a smooth, dense surface with a uniform texture and no segregation at the specified thickness and dimensions indicated in the plans and specifications.

When unforeseen weather conditions prevent further placement of the mix, the Engineer is not obligated to accept or place the bituminous concrete mixture that is in transit from the plant.

In advance of paving, traffic control requirements shall be set up daily, maintained throughout placement, and shall not be removed until all associated work including density testing is completed.

The Contractor shall inspect the newly placed pavement for defects in the mixture or placement before rolling is started. Any deviation from standard crown or section shall be immediately remedied by placing additional mixture or removing surplus mixture. Such defects shall be corrected to the satisfaction of the Engineer.

Where it is impractical due to physical limitations to operate the paving equipment, the Engineer may permit the use of other methods or equipment. Where hand spreading is permitted, the mixture shall be placed by means of suitable shovels and other tools, and in a uniformly loose layer at a thickness that will result in a completed pavement meeting the designed grade and elevation.

Placement Tolerances: Each lift of bituminous concrete placed at a uniform specified thickness shall meet the following requirements for thickness and area. Any pavement exceeding these limits shall be subject to an adjustment or removal. Lift tolerances will not relieve the Contractor from meeting the final designed grade. Lifts of specified non-uniform thickness, i.e. wedge or shim course, shall not be subject to thickness and area adjustments.

a) Thickness: Where the total thickness of the lift of mixture exceeds that shown on the plans beyond the tolerances shown in Table 4.06-3, the longitudinal limits of such variation including locations and intervals of the measurements will be documented by the Engineer for use in calculating an adjustment in accordance with Article 4.06.04.

TABLE 4.06-3: Thickness Tolerances

Mixture Designation	Lift Tolerance
S1	+/- 3/8 inch
S0.25, S0.375, S0.5	+/- 1/4 inch

Where the thickness of the lift of mixture is less than that shown on the plans beyond the tolerances shown in Table 4.06-3, the Contractor, with the approval of the Engineer, shall take corrective action in accordance with this Section.

b) Area: Where the width of the lift exceeds that shown on the plans by more than the specified thickness of each lift, the longitudinal limits of such variation including locations and intervals of the measurements will be documented by the Engineer for use in calculating the adjustment in Article 4.06.04.

c) Delivered Weight of Mixture: When the delivery ticket shows that the truck exceeds the allowable gross weight for the vehicle type the quantity of tons representing the overweight amount will be documented by the Engineer for use in calculating an adjustment in accordance with Article 4.06.04.

Transverse Joints: All transverse joints shall be formed by saw-cutting a sufficient distance back from the previous run, existing bituminous concrete pavement or bituminous concrete driveways to expose the full thickness of the lift. A brush of tack coat shall be used on any cold joint immediately prior to additional bituminous concrete mixture being placed.

Tack Coat Application: Immediately before application, the area to be tacked shall be cleaned by sweeping or by other means acceptable to the Engineer. A thin uniform coating of tack coat shall be applied to the pavement immediately before overlaying and be allowed sufficient time to break (set) prior to any paving equipment or haul vehicles driving on it. All surfaces in contact with the bituminous concrete that have been in place longer than 3 calendar days shall have an application of tack coat. The tack coat shall be applied by a non-gravity pressurized spray system that results in uniform overlapping coverage at an application rate of 0.03 to 0.05 gal/s.y. for a non-milled surface and an application rate of 0.05 to 0.07 gal/s.y. for a milled surface. For areas where both milled and un-milled surfaces occur, the tack coat shall be an application rate of 0.03 to 0.05 gal/s.y. The Engineer must approve the equipment and the method of measurement prior to use. The material for tack coat shall not be heated in excess of 160°F and shall not be further diluted.

Compaction: The Contractor shall compact the mixture to meet the density requirements as stated in Article 4.06.03 and eliminate all roller marks without displacement, shoving, cracking, or aggregate breakage.

When placing a lift with a specified thickness less than 1 1/2 in, or a wedge course, the Contractor shall provide a minimum rolling pattern as determined by the development of a compaction curve. The procedure to be used shall be documented in the Contractor's QCP for placement and demonstrated on the first day of placement.

The use of the vibratory system on concrete structures is prohibited. When approved by the Engineer, the Contractor may operate a roller using an oscillatory system at the lowest frequency setting.

If the Engineer determines that the use of compaction equipment in the dynamic mode may damage highway components, utilities, or adjacent property, the Contractor shall provide alternate compaction equipment. The Engineer may allow the Contractor to operate rollers in the dynamic mode using the oscillatory system at the lowest frequency setting.

Rollers operating in the dynamic mode shall be shut off when changing directions.

These allowances will not relieve the Contractor from meeting pavement compaction requirements.

Surface Requirements: The pavement surface of any lift shall meet the following requirements for smoothness and uniformity. Any irregularity of the surface exceeding these requirements shall be corrected by the Contractor.

a) Smoothness: Each lift of the surface course shall not vary more than 1/4 in from a Contractor-supplied 10 ft straightedge. For all other lifts of bituminous concrete, the tolerance shall be 3/8 in. Such tolerance will apply to all paved areas.
b) Uniformity: The paved surface of the mat and joints shall not exhibit segregation, rutting, cracking, disintegration, flushing or vary in composition as determined by the Engineer.

7. Longitudinal Joint Construction Methods: The Contractor shall use Method I-Notched Wedge Joint (see Figure 4.06-1) when constructing longitudinal joints where lift thicknesses are between 1 1/2 and 3 in, except for S1mixes. Method II Butt Joint (see Figure 4.06-2) shall be used for lifts less than 1 1/2 in or greater than 3 in, and S1

mixes. During placement of multiple lifts of bituminous concrete, the longitudinal joint shall be constructed in such a manner that it is located at least 6 in from the joint in the lift immediately below. The joint in the final lift shall be at the centerline or at lane lines. Each longitudinal joint shall maintain a consistent offset from the centerline of the roadway along its entire length. The difference in elevation between the two faces of any completed longitudinal joint shall not exceed 1/4 in at any location.

Method I - Notched Wedge Joint:

A notched wedge joint shall be constructed as shown in Figure 4.06-1 using a device that is attached to the paver screed and is capable of independently adjusting the top and bottom vertical notches. The device shall have an integrated vibratory system.

The taper portion of the wedge joint must be placed over the longitudinal joint in the lift immediately below. The top vertical notch must be located at the centerline or lane line in the final lift. The requirement for paving full width “curb to curb” as described in Method II may be waived if addressed in the QC plan and approved by the Engineer.

The taper portion of the wedge joint shall be evenly compacted using equipment other than the paver or notch wedge joint device.

The taper portion of the wedge joint shall not be exposed to traffic for more than 5 calendar days.

The pavement surface under the wedge joint must have an application of tack coat material. Prior to placing the completing pass (hot side), an application of tack coat must be applied to the exposed surface of the tapered section; regardless of time elapsed between paver passes. The in-place time allowance described in Subarticle 4.06.03-7 does not apply to joint construction.

FIGURE 4.06-1: Notched Wedge Joint (Not to Scale)

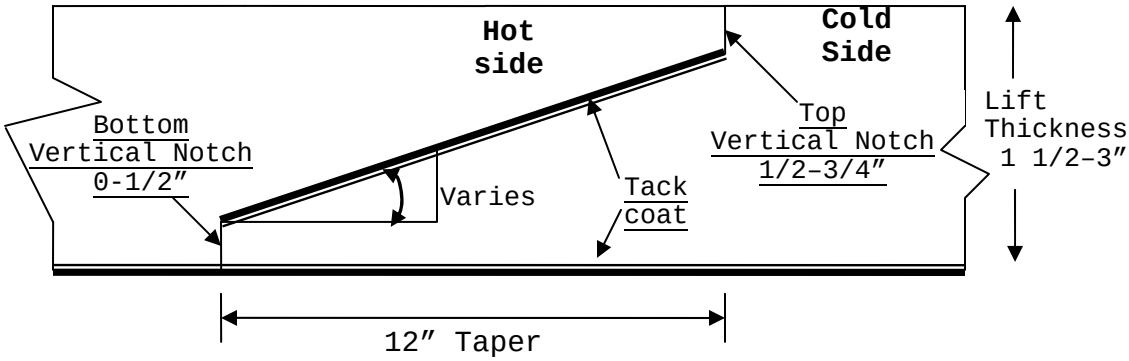

Any exposed wedge joint must be located to allow for the free draining of water from the road surface.

The Engineer reserves the right to define the paving limits when using a wedge joint that will be exposed to traffic.

If Method I, Notched Wedge Joint cannot be used on lifts between 1.5 and 3 inches, Method III Butt Joint may be substituted according to the requirements below for “Method III – Butt Joint with Hot Pour Rubberized Asphalt Treatment.”

Method II - Butt Joint:

When adjoining passes are placed, the Contractor shall utilize equipment that creates a near vertical edge (refer to Figure 4.06-2).

The completing pass (hot side) shall have sufficient mixture so that the compacted thickness is not less than the previous pass (cold side). The end gate on the paver should be set so there is an overlap onto the cold side of the joint.

FIGURE 4.06-2: Butt Joint (Not to Scale)

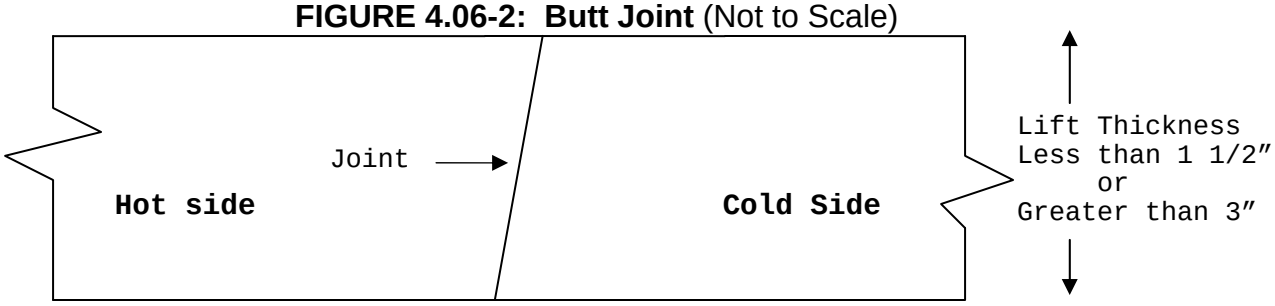

The Contractor shall not allow any butt joint to be incomplete at the end of a work shift unless otherwise allowed by the Engineer. When using this method, the Contractor is not allowed to leave a vertical edge exposed at the end of a work shift and must complete paving of the roadway full width "curb to curb."

<u>Method III- Butt Joint with Hot Poured Rubberized Asphalt Treatment</u>:

If Method I Notched Wedge Joint cannot be used due to physical constraints in certain limited locations; the Contractor may submit a request in writing for approval by the Engineer, to utilize Method III Butt Joint with Hot Poured Rubberized Asphalt Treatment as a substitution in those locations. There shall be no additional measurement or payment made when the Method III joint is substituted for the Method I wedge joint. When required by the Contract or approved by the Engineer, Method III (see Figure 4.06-3) shall be used.

FIGURE 4.06-3: Butt Joint with Hot Poured Rubberized Asphalt Treatment
(Not to Scale)

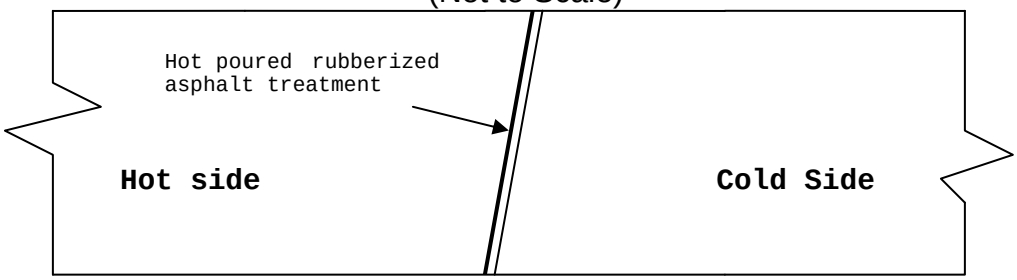

All of the requirements of Method II must be met with Method III. In addition, the longitudinal vertical edge must be treated with a rubberized joint seal material meeting the requirements of ASTM D 6690, Type 2. The joint sealant shall be placed on the face of the "cold side" of the butt joint as shown above prior to placing the "hot side" of the butt joint. The joint seal material shall be applied in accordance with the manufacturer's recommendation so as to provide a uniform coverage and avoid excess bleeding onto the newly placed pavement.

8. Contractor Quality Control (QC) Requirements: The Contractor shall be responsible for maintaining adequate quality control procedures throughout the production and placement operations. Therefore, the Contractor must ensure that the materials, mixture and work provided by subcontractors, suppliers and producers also meets Contract specification requirements.

This effort must be documented in a Quality Control Plan (QCP) which shall also address the actions, inspection, or sampling and testing necessary to keep the production and placement operations in control, to determine when an operation has gone out of control and to respond to correct the situation in a timely fashion.

The Standard QCP for production shall consist of the quality control program specific to the production facility.

There are 3 components to the QCP for placement: a Standard QCP, a Project Summary Sheet that details Project-specific information, and if applicable a separate Extended Season Paving Plan as required in Section 9 "Temperature and Seasonal Requirements."

The Standard QCP for both production and placement shall be submitted to the Department for approval each calendar year a minimum of 30 days prior to production or placement. Production or placement shall not occur until all QCP components have been approved by the Engineer.

Each QCP shall include the name and qualifications of a Quality Control Manager (QCM). The QCM shall be responsible for the administration of the QCP, and any modifications that may become necessary. The QCM shall have the ability to direct all Contractor personnel on the Project during paving operations. All Contractor sampling, inspection and test reports shall be reviewed and signed by the QCM prior to submittal to the Engineer. The QCP shall also include the name and qualifications of any outside testing laboratory performing any QC functions on behalf of the Contractor.

Approval of the QCP does not relieve the Contractor of its responsibility to comply with the Project specifications. The Contractor may modify the QCP as work progresses and must document the changes in writing prior to resuming operations. These changes include but are not limited to changes in quality control procedures or personnel. The Department reserves the right to deny significant changes to the QCP.

QCP for Production: Refer to Section M.04.03-1.

QCP for Placement: The Standard QCP, Project Summary Sheet, and Extended Season Paving Plan shall conform to the format provided by the Engineer. The format is available at http://www.ct.gov/dot/lib/dot/documents/dconstruction/pat/qcp_outline_hma_placement.pdf.

The Contractor shall perform all quality control sampling and testing, provide inspection, and exercise management control to ensure that bituminous concrete placement conforms to the requirements as outlined in its QCP during all phases of the work. The Contractor shall document these activities for each day of placement.

The Contractor shall submit complete field density testing and inspection records to the Engineer within 48 hours of the test in a manner acceptable to the Engineer.

The Contractor may obtain 1 mat core and 1 joint core per day for process control, provided this process is detailed in the QCP. The results of these process control cores shall not be used to dispute the Department determinations from the acceptance cores.

The Contractor shall submit the location of each process control core to the Engineer for approval prior to taking the core. The core holes shall be filled to the same requirements described in Sub article 4.06.03-10.

9. Temperature and Seasonal Requirements: Paving, including placement of temporary pavements, shall be divided into two seasons, "In-Season" and "Extended-Season." In-Season paving occurs from May 1 to October 14, and Extended Season paving occurs from October 15 to April 30. The following requirements shall apply unless otherwise authorized or directed by the Engineer:

- Bituminous concrete mixes shall not be placed when the air or subbase temperature is below 40°F regardless of the season.
- Should paving operations be scheduled during the Extended Season, the Contractor must submit an Extended Season Paving Plan for the Project that addresses minimum delivered mix temperature considering WMA, PMA or other additives, maximum paver speed, enhanced rolling patterns and the method to

balance mixture delivery and placement operations. Paving during Extended Season shall not commence until the Engineer has approved the plan.

10. **Density Testing of Bituminous Concrete Using Core Samples:** This procedure describes the frequency and the method the Contractor shall use to obtain pavement cores for acceptance from the Project.

Coring shall be performed on each lift specified to a thickness of 1 1/2 in or more. All material placed in a lift shall be compacted to the degree specified in Tables 4.06-8 and 4.06-9. The density of each core will be determined using the production lot's average maximum theoretical specific gravity (Gmm) established during the testing of the parent material at the plant. When there was no testing of the parent material or any Gmm exceeds the specified tolerances in the Department's current QA Program for Materials, the Engineer will determine the maximum theoretical density value to be used for density calculations. Bituminous concrete HMA S1 mixes are excluded from the longitudinal joint density requirements.

The Contractor shall extract cores (4 or 6 in diameter for S0.25, S0.375 and S0.5 mixes, 6 in diameter for S1.0 mixtures - wet sawed) from sampling locations determined by the Engineer. The Engineer must witness the extraction and labeling of cores, as well as the filling of the core holes. The cores shall be labeled by the Contractor with the Project number, lot number, and sub-lot number on the top surface of the core. When labeling the core lot number, include whether the core is from a mat lot or joint lot by using an "M" for a mat core and "J" for a joint core. For example, a core from the first sub-lot of the first mat lot shall be labeled with "Lot M1 – 1." The first number refers to the lot and the second number refers to the sub-lot. See Figure 4.06-4. The side of the cores shall be labeled with the core lot number and date placed. The Project inspector shall fill out a MAT-109 containing the same information to accompany the cores. The Contractor shall deliver the cores and MAT-109 to the Department's Central Testing Lab in a safe manner to ensure no damage occurs to the cores. The Contractor shall use a container approved by the Engineer. In general the container shall consist of an attached lid container made out of plastic capable of being locked shut and shall be tamper proof. The Contractor shall use foam, bubble wrap, or another suitable material to prevent the cores from being damaged during transportation. Once the cores and MAT-109 are in the container the Engineer will secure the lid using a security seal. The security seal's identification number must be documented on the MAT-109. The Central Lab will break the security seal and take possession of the cores upon receipt.

FIGURE 4.06-4: Labeling of Cores

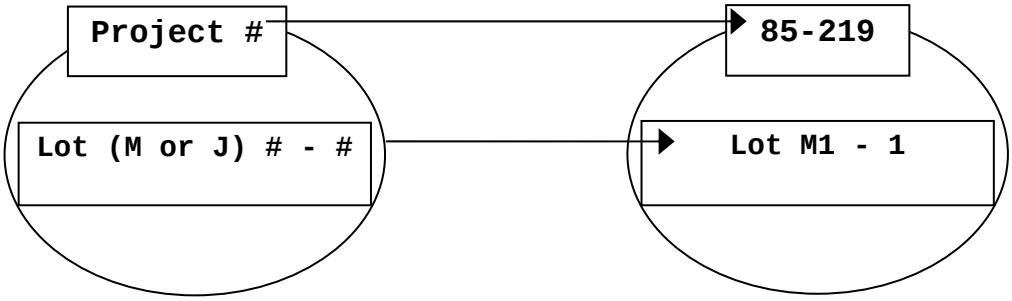

Frequency of sampling is in accordance with the following tables:

TABLE 4.06-4: Testing Requirement for Bridge Density Lot

Length of Each Structure (Feet)	MAT – No. of Cores	JOINT - No. of cores
≤ 500	See Table 4.06-5(A or B)	See Table 4.06-5(A or B)
501 – 1500	3	3
1501 – 2500	4	4
2501 and greater	5	5

All material placed on structures less than or equal to 500 ft long shall be included as part of a standard lot as follows:

TABLE 4.06-5A: Testing requirement for Density Lots ≥ 500 Tons

Lot Type	No. of Mat Cores		No. of Joint Cores		Target Lot Size (Tons)
Lot Without Bridge(1)	4		4		2000
Lot With Bridge(s)(1)(2)	4 plus	1 per structure (≤ 300')	4 plus	1 per structure (≤ 300)	2000
		2 per structure (301' – 500')		2 per structure (301' – 500')	

TABLE 4.06-5B: Testing requirement for Density Lots < 500 Tons

Lot Type	No. of Mat Cores	No. of Joint Cores	Lot Size (Tons)
Lot Without Bridge(1)	3	3	1 per lift
Lot With Bridge(s)(1)(2)	3	3	1 per lift

Notes:

(1) The number of "Required Paver Passes for Full Width" shall be used to determine the sub-lot sizes within the lot. The number of paver passes for full width is determined by the Contractor.

(2) If a non-bridge mat or joint core location randomly falls on a structure, the core is to be obtained on the structure in addition to the core(s) required on the structure.

A density lot will be complete when the full designed paving width of the established lot length has been completed and shall include all longitudinal joints that exist between the curb lines regardless of date(s) paved. Quantity of material placed on structures less than or equal to 500 ft long is inclusive of the standard lot. Prior to paving, the total length of the Project to be paved shall be split up into lots that contain approximately 2000 tons each. Areas such as highway ramps may be combined to create one lot. In general, combined areas should be set up to target a 2000 ton lot size. One (1) adjustment will apply for each lot. The tons shall be determined using the yield calculation in Article 4.06.04. The last lot shall be the difference between the total payable tons for the Project and the sum of the previous lots.

After the compaction process has been completed, the material shall be allowed to

cool sufficiently to allow the cutting and removal of the core without damage. The Contractor shall core to a depth that allows extraction so that the uppermost layer being tested for density will not be affected.

A mat core shall not be taken any closer than 1 ft from the edge of a paver pass. If a random number locates a core less than 1 ft from any edge, locate the core so that the sample is 1 ft from the edge.

Method I, Notched Wedge Joint cores shall be taken so that the center of the core is 5 in from the visible joint on the hot mat side. Refer to Figure 4.06-5.

When Method III Butt Joint with Hot Poured Rubberized Asphalt Treatment is used, cores shall be taken from the hot side so the edge of the core is within 1 in of the longitudinal joint.

All cores must be cut within 5 calendar days of placement. Any core that is damaged or obviously defective while being obtained will be replaced with a new core from a location within 2 ft measured in a longitudinal direction.

Each core hole shall be filled within 4 hours upon core extraction. Prior to being filled, the hole shall be prepared by removing any free water and applying tack coat using a brush or other means to uniformly cover the cut surface. The core hole shall be filled using a bituminous concrete mixture at a minimum temperature of 240°F containing the same or smaller nominal maximum aggregate size and compacted with a hand compactor or other mechanical means to the maximum compaction possible. The bituminous concrete fill shall be compacted to 1/8 in above the finished pavement.

FIGURE 4.06-5: Notched Wedge Joint Cores (Not to Scale)

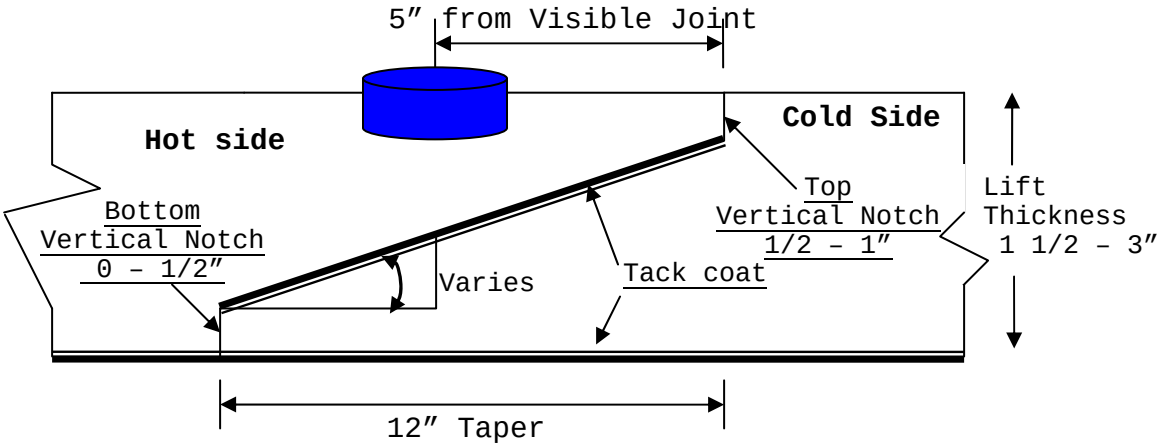

11. Acceptance Inspection, Sampling and Testing: Inspection, sampling, and testing to be used by the Engineer shall be performed at the minimum frequency specified in Section M.04 and stated herein.

Sampling for acceptance shall be established using ASTM D3665, or a statistically based procedure of random sampling approved by the Engineer.

Plant Material Acceptance: The Contractor shall provide the required acceptance sampling, testing and inspection during all phases of the work in accordance with Section M.04. The Department will perform verification testing on the Contractor's acceptance test results. Should binder content, theoretical maximum density (Gmm), or air void test results exceed the specified tolerances in the Department's current QA Program for Materials, Acceptance and Assurance Testing Policies and Procedures, the Department will investigate to determine an assignable cause. Contractor test results for a subject lot or sub lot may be replaced with the Department's results for the

purpose of assessing adjustments. The verification procedure is included in the Department's current QA Program for Materials.

Density Acceptance: The Engineer will perform all acceptance testing on the cores in accordance with AASHTO T331.

12. Density Dispute Resolution Process: The Contractor and Engineer will work in partnership to avoid potential conflicts and to resolve any differences that may arise during quality control or acceptance testing for density. Both parties will review their sampling and testing procedures and results and share their findings. If the Contractor disputes the Engineer's test results, the Contractor must submit a written request to initiate the Dispute Resolution Process within 7 calendar days of the notification of the test results. No request for dispute resolution will be allowed unless the Contractor provides quality control results within the timeframe described in Subarticle 4.06.03-9 supporting its position. No request for Dispute Resolution will be allowed for a Density Lot in which any core was not taken within the required 5 calendar days of placement. Should the dispute not be resolved through evaluation of existing testing data or procedures, the Engineer may authorize the Contractor to obtain a new set of core samples per disputed lot. The core samples must be extracted no later than 14 calendar days from the date of Engineer's authorization.

The number and type (mat, joint, or structure) of the cores taken for dispute resolution must reflect the number and type of the cores taken for acceptance. The location of each core shall be randomly located within the respective original sub lot. All such core samples shall be extracted and filled using the procedure outlined in Article 4.06.03. The results from the dispute resolution cores shall be added to the results from the acceptance cores and averaged for determining the final in-place density value.

13. Corrective Work Procedures: Any portion of the completed pavement that does not meet the requirements of the specification shall be corrected at the expense of the Contractor. Any corrective courses placed as the final wearing surface shall match the specified lift thickness after compaction.

If pavement placed by the Contractor does not meet the specifications, and the Engineer requires its replacement or correction, the Contractor shall:

a) Propose a corrective procedure to the Engineer for review and approval prior to any corrective work commencing. The proposal shall include:
   - Limits of pavement to be replaced or corrected, indicating stationing or other landmarks that are readily distinguishable.
   - Proposed work schedule.
   - Construction method and sequence of operations.
   - Methods of maintenance and protection of traffic.
   - Material sources.
   - Names and telephone numbers of supervising personnel.

b) Perform all corrective work in accordance with the Contract and the approved corrective procedure.

14. Protection of the Work: The Contractor shall protect all sections of the newly finished pavement from damage that may occur as a result of the Contractor's operations for the duration of the Project. Prior to the Engineer's authorization to open the pavement to traffic, the Contractor is responsible to protect the pavement from damage.

15. Cut Bituminous Concrete Pavement: Work under this item shall consist of making a straight-line cut in the bituminous concrete pavement to the lines delineated on the plans or as directed by the Engineer. The cut shall provide a straight, clean, vertical face with no cracking, tearing or breakage along the cut edge.

4.06.04—Method of Measurement:

1. HMA S* or PMA S*: The quantity of bituminous concrete measured for payment will be determined by the documented net weight in tons accepted by the Engineer in accordance with this Section and Section M.04.

2. Adjustments: Adjustments may be applied to bituminous concrete quantities and will be measured for payment using the following formulas:

Yield Factor for Adjustment Calculation = 0.0575 Tons/SY/inch

Actual Area = [(Measured Length (ft)) x (Avg. of width measurements (ft))]÷9 s.f./SY

Actual Thickness (t) = Total tons delivered / [Actual Area (SY) x 0.0575 Tons/SY/inch]

a) Area: If the average width exceeds the allowable tolerance, an adjustment will be made using the following formula. The tolerance for width is equal to the specified thickness (inches) of the lift being placed.

Tons Adjusted for Area (T_A) = [(L x W_{adj})/9] x (t) x 0.0575 Tons/SY/inch = (-) Tons

Where: L = Length (ft)

(t) = Actual thickness (inches)

W_{adj} = (Designed width (ft) + tolerance /12) - Measured Width)

b) Thickness: If the actual thickness is less than the allowable tolerance, the Contractor shall submit a repair procedure to the Engineer for approval. If the actual thickness exceeds the allowable tolerance, an adjustment will be made using the following formula:

Tons Adjusted for Thickness (T_T) = A x t_{adj} x 0.0575 = (-) Tons

Where: A = Area = {[L x (Design width + tolerance (lift thickness)/12)] / 9}

t_{adj} = Adjusted thickness = [(Dt + tolerance) - Actual thickness]

(Note: Design thickness, tolerance and Actual thickness in inches)

c) Weight: If the quantity of bituminous concrete representing the mixture delivered to the Project is in excess of the allowable gross vehicle weight (GVW) for each vehicle, an adjustment will be made using the following formula:

Tons Adjusted for Weight (T_W) = GVW – DGW= (-) Tons

Where: DGW = Delivered gross weight as shown on the delivery ticket or measured on a certified scale.

d) Mixture Adjustment: The quantity of bituminous concrete representing the production lot will be adjusted based on test results and values listed in Tables 4.06-6 and 4.06-7. The Department's Division of Materials Testing will calculate the daily adjustment value for T_{SD}.

The adjustment values in Tables 4.06-6 and 4.06-7 will be calculated for each sub lot based on the Air Void and Liquid Binder Content test results for that sub lot. The total adjustment for each day's production (lot) will be computed using tables and the following formulas:

Tons Adjusted for Superpave Design (T_{SD}) = [($AdjAV_t$ + $AdjPB_t$) / 100] x Tons

Percent Adjustment for Air Voids =

$AdjAV_t$ = [$AdjAV_1$ + $AdjAV_2$ + $AdjAV_i$ + … + $AdjAV_n$)] /n

Where: $AdjAV_t$ = Total percent air void adjustment value for the lot

$AdjAV_i$ = Adjustment value from Table 4.06-7 resulting from each sub lot or the average of the adjustment values resulting from multiple tests within a sub lot, as approved by the Engineer.

n = number of sub lots based on Table M.04.03-1

TABLE 4.06-6: Adjustment Values for Air Voids

Adjustment Value ($AdjAV_i$) (%)	S0.25, S0.375, S0.5, S1 Air Voids (AV)
+2.5	3.8 - 4.2
+3.125(AV-3)	3.0 - 3.7
-3.125(AV-5)	4.3 – 5.0
20 x (AV-3)	2.3 – 2.9
-20 x (AV-5)	5.1 – 5.7
-20.0	less than or equal to 2.2 or greater than or equal to 5.8

Positive air void adjustment values will not be calculated for any test that fails to meet gradation or binder content tolerances of the JMF in Table M.04.03-5.

Percent Adjustment for Liquid Binder =

$AdjPB_t = [(AdjPB_1 + AdjPB_2 + AdjPB_i + \ldots + AdjPB_n)] / n$

Where: $AdjPB_t$= Total percent liquid binder adjustment value for the lot

$AdjPB_i$ = Adjustment value from Table 4.06-7 resulting from each sub lot

n = number of binder tests in a production lot

TABLE 4.06-7: Adjustment Values for Binder Content

Adjustment Value ($AdjAV_i$) (%)	S0.25, S0.375, S0.5, S1 Pb (refer to Table M.04.02-5)
0.0	Equal to or above the min. liquid content
- 10.0	Below the min. liquid content

e) Density Adjustment: The quantity of bituminous concrete measured for payment in a lift of pavement specified to be 1 1/2 in or greater may be adjusted for density. Separate density adjustments will be made for each lot and will not be combined to establish 1 density adjustment. If either the Mat or Joint adjustment value is “remove and replace,” the density lot shall be removed and replaced (curb to curb).

No positive adjustment will be applied to a Density Lot in which any core was not taken within the required 5 calendar days of placement.

Tons Adjusted for Density (T_D) =

$[\{(PA_M \times 0.50) + (PA_J \times 0.50)\} / 100]$ X Density Lot Tons

Where: T_D = Total tons adjusted for density for each lot

PA_M = Mat density percent adjustment from Table 4.06-8

PA_J = Joint density percent adjustment from Table 4.06-9

TABLE 4.06-8: Adjustment Values for Pavement Mat density

Average Core Result Percent Mat Density	Percent Adjustment (Bridge and Non-Bridge) (1)(2)
97.1 - 100	-1.667 x (ACRPD-98.5)
94.5 – 97.0	+2.5
93.5 – 94.4	+2.5 x (ACRPD-93.5)
92.0 – 93.4	0
90.0 – 91.9	-5 x (92-ACRPD)
88.0 – 89.9	-10 x (91-ACRPD)
87.0 – 87.9	-30
86.9 or less	Remove and Replace (curb to curb)

NOTES:
(1) ACRPD = Average Core Result Percent Density
(2) All Percent Adjustments to be rounded to the second decimal place. For example, 1.667 is to be rounded to 1.67.

TABLE 4.06-9: Adjustment Values for Pavement Joint Density

Average Core Result Percent Joint Density	Percent Adjustment (Bridge and Non-Bridge) (1)(2)
97.1 – 100	-1.667*(ACRPD-98.5)
93.5 – 97.0	+2.5
92.0 – 93.4	+1.667*(ACRPD-92)
91.0 – 91.9	0
89.0 – 90.9	-7.5*(91-ACRPD)
88.0 – 88.9	-15*(90-ACRPD)
87.0 – 87.9	-30
86.9 or less	Remove and Replace (curb to curb)

NOTES:
(1) ACRPD = Average Core Result Percent Density
(2) All Percent Adjustments to be rounded to the second decimal place. For example, 1.667 is to be rounded to 1.67.

3. Transitions for Roadway Surface: The installation of permanent transitions will be measured under the appropriate HMA or PMA item used in the formation of the transition.

The quantity of material used for the installation of temporary transitions shall be measured for payment under the appropriate item used in the formation of the transition. The installation and removal of a bond breaker, and the removal and disposal of any temporary transition formed by milling or with bituminous concrete pavement is not measured for payment.

4. Cut Bituminous Concrete Pavement: The quantity of bituminous concrete pavement cut will be measured in accordance with Article 2.02.04.

5. Material for Tack Coat: The quantity of tack coat will be measured for payment by the number of gallons furnished and applied on the Project and approved by the

Engineer. No tack coat material shall be included that is placed in excess of the tolerance described in Article 4.06.03-6.

a. Container Method - Material furnished in a container will be measured to the nearest 1/2 gallon. The volume will be determined by either measuring the volume in the original container by a method approved by the Engineer or using a separate graduated container capable of measuring the volume to the nearest 1/2 gallon. The container in which the material is furnished must include the description of material, including lot number or batch number and manufacturer or product source.
b. Truck Method - The Engineer will establish a weight per gallon of the tack coat based on the density at 60ºF for the material furnished. The number of gallons furnished will be determined by weighing the material on scales furnished by and at the expense of the Contractor, or from the automated metering system on the delivery vehicle.

6. Material Transfer Vehicle (MTV): The furnishing and use of a MTV will be measured separately for payment based on the actual number of surface course tons delivered to a paver using the MTV.

4.06.05—Basis of Payment:

1. HMA S* or PMA S*: The furnishing and placing of bituminous concrete will be paid for at the Contract unit price per ton for "HMA S*" or "PMA S*."

All costs associated with providing illumination of the work area are included in the general cost of the work.

All costs associated with cleaning the surface to be paved, including mechanical sweeping, are included in the general cost of the work. All costs associated with constructing longitudinal joints are included in the general cost of the work.

All costs associated with obtaining cores for acceptance testing and dispute resolution are included in the general cost of the work.

2. Bituminous Concrete Adjustment Costs: This adjustment will be calculated using the formulas shown below if all of the measured adjustments in Article 4.06.04 are not equal to zero. A positive or negative adjustment will be applied to monies due the Contractor.

Production Lot: $[T_T + T_A + T_W + T_{SD})]$ x Unit Price = Est. (P)
Density Lot: T_D X Unit Price = Est. (D)

Where: Unit Price = Contract unit price per ton per type of mixture
T_T = Total tons of each adjustment calculated in Article 4.06.04
T_A = Total tons adjusted for area
T_W = Total tons adjusted for weight
T_{SD} = Total tons adjusted for Superpave design
T_D = Total tons adjusted for density
Est. ( )= Pay Unit in dollars representing incentive or disincentive

The Bituminous Concrete Adjustment Cost item, if included in the bid proposal or estimate, is not to be altered in any manner by the Bidder. If the Bidder should alter the amount shown, the altered figure will be disregarded and the original estimated cost will be used for the Contract.

3. Transitions for Roadway Surface: The installation of permanent transitions will be paid under the appropriate HMA or PMA item used in the formation of the transition. The quantity of material used for the installation of temporary transitions will be paid

under the appropriate pay item used in the formation of the transition. The installation and removal of a bond breaker, and the removal and disposal of any temporary transition formed by milling or with bituminous concrete pavement is included in the general cost of the work.

4. The cutting of bituminous concrete pavement will be paid in accordance with Article 2.02.05 for “Cut Bituminous Concrete Pavement.”

5. Material for tack coat will be paid for at the Contract unit price per gallon for "Material for Tack Coat."

6. The Material Transfer Vehicle (MTV) will be paid at the Contract unit price per ton for a "Material Transfer Vehicle.”

Pay Item	Pay Unit
HMA S*	ton
PMA S*	ton
Bituminous Concrete Adjustment Cost	est.
Material for Tack Coat	gal.
Material Transfer Vehicle	ton

CONNECTICUT
SUPPLEMENTAL SPECIFICATION
SECTION 4.14
BITUMINOUS SURFACE TREATMENT

Delete the entire section.

CONNECTICUT
SUPPLEMENTAL SPECIFICATION
SECTION 5.04
RAILROAD PROTECTION

Replace the entire Section with the following:

SECTION 5.04
RAILROAD PROTECTION

5.04.01—Description: This item shall consist of securing protective services of workers such as flagmen, electric traction linemen, inspectors, track foremen, signalmen, or other such protective services deemed necessary by a railroad engaged in or affected by the Project operations of the Contractor on, over, under or adjacent to the railroad's right-of-way. This item shall also include any material or equipment incidental to or required for the provision of such required protective services. The Contractor shall secure such services as are required by the railroad, and if said services are obtained from the railroad, the Contractor shall reimburse the railroad for them, in accordance with relevant Contract terms or with the railroad's customary terms for such transactions. The Contractor must understand that the railroad may require advance payment of all or a portion of the estimated costs for the services, in which case the Contractor shall make such advance payment.

5.04.02—Vacant

5.04.03—Vacant

5.04.04—Method of Measurement: Only Project-related protective services billed by the railroad and approved by the Engineer will be measured for payment. Protective services which the Engineer did not approve or deem necessary for the proper completion of the Project, will not be measured for payment.

5.04.05—Basis of Payment: The sum of money for this item shown in the bid Estimate and in the itemized bid proposal as “Estimated Cost” for this work will be considered and treated as the bid price for it, even though payment for it will be made as described below. The estimated cost figure is not to be altered in any manner by the bidder. Should the bidder alter the amount shown, the altered figures will be disregarded and the original bid price will be used as the total amount for the Contract item. The Department will pay the Contractor for “Railroad Protection ” at the actual hourly rate charged to the Contractor for railroad protection services approved by the Engineer (as shown in the monthly statement or receipted bills to the Contractor from the entity that provided the actual services), plus a five percent (5%) markup. This price shall include all labor, material and equipment provided by a railroad for protective services required for Project operations.

Protective services used solely for the convenience or benefit of the Contractor shall be the legal and financial responsibility of the Contractor and will not be included in this item.

Final acceptance of the Project and resolution of financial Project obligations by the Department will be contingent upon the Contractor's providing the Department with proof that each railroad involved in the Project has been reimbursed for all necessary

protective services provided by the railroad or that the Contractor has made some other arrangements satisfactory to said railroad(s) for such reimbursement.

Pay Item	Pay Unit
Railroad Protection	est.

CONNECTICUT
SUPPLEMENTAL SPECIFICATION
SECTION 5.08
SHEAR CONNECTORS

5.08.02—Materials:

Replace the only paragraph with the following:

“ Stud shear connectors shall meet the requirements of Subarticle M.06.02-4 Welded Stud Shear Connectors.”

5.08.03—Construction Methods:

Replace the last sentence of the third paragraph with the following:

“ Stud shear connectors may be stacked to meet heights greater than the 8 in (200 mm) maximum for individual studs.”

Replace the last sentence of the fifth paragraph with the following:

“ Studs exhibiting no signs of failure after bending shall be left in the bent position, if allowed by the Engineer.”

5.08.04—Method of Measurement:

Delete the entire article and replace with the following:

“ Installed and accepted shear connectors will be measured as units.
For stacked studs, the Department will measure for payment any stack higher than 8 in (200 mm) as two (2) studs.”

5.08.05—Basis of Payment:

Delete the entire article and replace with the following:

“ This work will be paid for at the Contract unit price each for “Shear Connectors,” which price shall include all materials, tools, equipment and labor incidental thereto for all work under this item on the Project.

Pay Item	Pay Unit
Shear Connectors	ea. (ea.)”

CONNECTICUT
SUPPLEMENTAL SPECIFICATION
SECTION 5.14
PRESTRESSED CONCRETE MEMBERS

Article 5.14.03—Construction Methods:

2. Prestressing:

Change the outline level of "**Final Stressing of Straight Strands:**" *and* "**Final Stressing of Draped Strands:**" *and their subsections as follows:*

" **A. Final Stressing of Straight Strands:**
(1) Single-strand tensioning:
(2) Multiple-strand tensioning:
B. Final Stressing of Draped Strands:
(1) Partial stressing and subsequent strains:
(2) Final stressing in draped position:"

5. Finishing: Deck Units:

Change the first sentence as follows:

"Deck units in structures that will have a bituminous concrete wearing surface shall be given a float finish on the top surface as specified in Subarticle 6.01.03-10."

9. Joining Deck Units:

Change the end of the last sentence of the first paragraph as follows:

"... shall be filled with non-shrink grout conforming to the requirements of Article M.03.05."

12. Inspection:

Change the beginning of the first sentence as follows:

"The provisions of Subarticle 6.03.03-3 (Shop Fabrication), (a) Notification shall apply to the steel items, ..."

16: Methods and Equipment:

Change the last sentence as follows:

"The results of this investigation, including computations, shall be submitted to the Engineer."

CONNECTICUT
SUPPLEMENTAL SPECIFICATION
SECTION 6.01
CONCRETE FOR STRUCTURES

Delete the entire Section and replace it with the following:

SECTION 6.01
CONCRETE FOR STRUCTURES

6.01.01—Description
6.01.02—Materials
6.01.03—Construction Methods
6.01.04—Method of Measurement
6.01.05—Basis of Payment

6.01.01—Description: This item shall include concrete for use in bridges and culverts, walls, catch basins, drop inlets and other incidental construction as required. The concrete shall be composed of Portland cement, pozzolans, fine and coarse aggregate, admixtures and water, prepared and constructed in accordance with these specifications, at the locations and of the form dimensions and class shown on the plans, or as directed by the Engineer.

The use of concrete from dry batch or central mixed plants is permitted for all concrete mixtures.

6.01.02—Materials: The materials for this work shall meet the requirements of M.03.

6.01.03—Construction Methods:

1. Falsework and Forms: Falsework is considered to be any temporary structure which supports structural elements of concrete, steel, masonry or other material during the construction or erection. Forms are considered to be the enclosures or panels which contain the fluid concrete and withstand the forces due to its placement and consolidation. Forms may in turn be supported on falsework.

This work shall consist of the construction and removal of falsework and forms that are designed by the Contractor in the execution of the work, and whose failure to perform properly could adversely affect the character of the Contract work or endanger the safety of adjacent facilities, property, or the public. Falsework and forms shall be mortar tight and of sufficient rigidity and strength to safely support all loads imposed and to produce in the finished structure the lines and grades indicated in the Contract documents. Forms shall also impart the required surface texture and rustication and shall not detract from the uniformity of color of the formed surfaces. Forms shall be of wood, steel or other material approved by the Engineer.

(a) Design: The design of falsework and formwork shall conform to the *AASHTO Guide Design Specifications for Bridge Temporary Works,* or to other established and generally accepted design codes such as ACI Standard *ACI 347 Recommended Practice for Concrete Formwork* or specific form or falsework manufacturer specifications. When other than new or undamaged materials are used, appropriate reductions in allowable stresses, and decreases in resistance factors or imposed loads shall be used for design.

(b) Loads: The design of the falsework and forms shall be based on load factors specified in the *AASHTO LRFD Bridge Design Specifications* and all applicable load combinations shall be investigated. The design load for falsework shall consist of the sum of appropriate dead and live vertical loads and any horizontal loads.

As a minimum, dead loads shall include the weight (mass) of the falsework and all construction material to be supported. The combined unit weight (density) of concrete, reinforcing and pre-stressing steel and forms that is supported shall be assumed to be not less than:

1. Normal-weight (normal-density) concrete: 0.16 kip/ft3 (2560 kg/m3)
2. Lightweight (low-density) concrete: 0.13 kip/ft3 (2080 kg/m3)

Live loads shall consist of the actual weight (mass) of any equipment to be supported, applied as concentrated loads at the points of contact and a uniform load of not less than 0.02 kip/ft^2 (0.001 MPa) applied over the area supported, plus 0.075 kip/ft (1.10 N/mm) applied at the outside edge of deck overhangs.

The horizontal load used for the design of the falsework bracing system shall be the sum of the horizontal loads due to equipment; construction sequence including unbalanced hydrostatic forces from fluid concrete and traffic control devices; stream flow, when applicable; and an allowance for wind. However, in no case shall the horizontal load to be resisted in any direction be less than two percent (2%) of the total dead load.

For post-tensioned structures, the falsework shall also be designed to support any increase in or redistribution of loads caused by tensioning of the structure. Loads imposed by falsework onto existing, new, or partially completed structures shall not exceed those permitted in 6.01.03-12, “Application of Loads.”

(c) Working Drawings: The working drawings for falsework and formwork shall be prepared in accordance with Article 1.05.02 whenever the falsework or formwork exceeds 14.0 ft (4300 mm) in height or whenever vehicular, marine, or pedestrian traffic may travel under or adjacent to the falsework or formwork. Working drawings shall include the sequence, method and rate of placement of the concrete.

Manufacturer catalog cuts or written installation procedures shall be provided for any clips, braces, hangers or other manufactured parts used with the formwork or falsework.

(d) Construction: Forms and falsework shall be built true to lines and grades, shall be strong, stable, firm, mortar-tight and adequately braced or tied, or both. They shall be designed and constructed to withstand all loads and pressures including those imposed by plastic concrete, taking full account of the stresses due to the rate of placement, effect of vibration and conditions brought about by construction methods. Forms and falsework shall be constructed to compensate for variations in camber of supporting members and allow for deflections.

Falsework and formwork shall be chamfered at all sharp corners, unless otherwise ordered or permitted, and shall be given a slight bevel or draft in the case of projections to ensure satisfactory removal. Materials for falsework and formwork and their supports, ties and bracing, shall be of the type, quality and strength to achieve the structural requirements. Form material in contact with concrete shall provide the finished concrete surface smoothness as specified in 6.01.03-10, “Finishing Concrete Surfaces,” and have a uniform appearance.

Falsework and formwork shall be treated with form oil or other release agent approved by the Engineer before the reinforcing steel is placed, or self-releasing

forms approved by the Engineer may be used. Release agents which will adhere to or discolor the concrete shall not be used.

Falsework and formwork for concrete surfaces exposed to view shall produce a smooth surface of uniform texture, free of voids, indentations, protrusions and bulges. Panels lining falsework and formwork shall be arranged so that the joint lines form a symmetrical pattern conforming to the general lines of the structure. The same type of form-lining material shall be used throughout each element of a structure. Falsework and formwork shall be sufficiently rigid so that the undulation of the concrete surface shall not exceed 1/4 in (6 mm) when checked with a 4 ft (1200 mm) straightedge or template.

For non-exposed surfaces the falsework and formwork shall be sufficiently rigid so that the undulation of the concrete surface shall not exceed 1/2 in (13 mm) when checked with a 4 ft (1200 mm) straightedge or template.

Metal ties and anchors to hold the falsework and formwork in alignment and location shall be so constructed that the metal work can be removed to a depth of at least 2 inches (50 mm) from the concrete surface without damage to the concrete. All cavities resulting from the removal of metal ties shall be filled after removal of forms with cement mortar of the same proportions used in the body of the work or other materials approved by the Engineer, and the surface finished smooth and even, and if exposed in the finished work, shall conform to the texture and color of adjacent surfaces. With permission of the Engineer, the Contractor need not remove from the underneath side of bridge decks portions of metal devices used to support reinforcing steel providing such devices are of material, or are adequately coated with material, that will not rust or corrode. When coated reinforcing steel is required, all metal ties, anchorages, or spreaders that remain in the concrete shall be of corrosion-resistant material or coated with a dielectric material.

Forms shall be clean and clear of all debris. For narrow walls and columns where the bottom of the form is inaccessible, an access opening will be allowed in the form and falsework for cleaning out extraneous material.

(e) Date of Completion: The year in which the superstructure is completed in its entirety shall be cast in at least two (2) places as shown on the plans unless otherwise ordered by the Engineer. The date shall be placed in diagonally opposite ends of the bridge parapets or as designated by the Engineer. The reverse molds for the date shall be furnished by the Contractor.

(f) Bridge Decks: After erection of beams and prior to placing falsework and forms, the Contractor shall take elevations along the top of the beam at the points shown on the plans or as directed by the Engineer. The Contractor shall calculate the haunch depths and provide them to the Engineer a minimum of seven (7) days prior to installing the falsework and forms. The Contractor shall also provide calculations for the setting of the overhang brackets based on the final beam deflection. These calculations shall be based on the final proposed deck grade and parapet elevations.

Falsework or formwork for deck forms on girder bridges shall be supported directly on the girders so that there will be no appreciable differential settlement during placing of the concrete. Girders shall be either braced and tied to resist any forces that would cause rotation or torsion in the girders caused by the placing of concrete for diaphragms or decks, or shown to be adequate for those effects. Unless specifically permitted, welding of falsework support brackets or braces to structural steel members or reinforcing steel shall not be allowed.

(g) Stay-In-Place Metal Forms for Bridge Decks: These forms may be used if shown in the Contract or approved by the Engineer. Prior to the use of such forms and

before fabricating any material, the Contractor shall submit working drawings to the Engineer for review in accordance with Article 1.05.02, Working Drawings. These drawings shall include the proposed method of form construction, erection plans including placement plans, attachment details, weld procedure(s), material lists, material designation, gage of all materials, and the details of corrugation. Also, copies of the form design computations shall be submitted with the working drawings. Any changes necessary to accommodate stay-in-place forms, if approved, shall be at no cost to the Department.

The metal forms shall be designed on the basis of the dead load of the form, reinforcement and the plastic concrete, including the additional weight (mass) of concrete [considered to be equivalent to the weight (mass) imposed by an additional concrete thickness equal to 3% of the proposed deck thickness, but not to exceed 0.3 in (8 mm)] due to the deflection of the metal forms, plus 50 psf (2.40 kPa) for construction loads. The allowable stress in the corrugated form and the accessories shall not be greater than 0.725 times the yield strength of the furnished material and the allowable stress shall not exceed 36,000 psi (250 MPa). The span for design and deflection shall be the clear distance between edges of the beams or girders less 2 in (50 mm) and shall be measured parallel to the form flutes. The maximum deflection under the weight (mass) of plastic concrete, reinforcement, and forms shall not exceed 1/180 of the form span or 0.5 in (13 mm), whichever is less. In no case shall the loading used to estimate this deflection be less than 120 psf (586 kg/sq.m). The permissible form camber shall be based on the actual dead load condition. Camber shall not be used to compensate for deflection in excess of the foregoing limits. The form support angles shall be designed as a cantilever with horizontal leg not more than 3 in (75 mm).

No stay-in-place metal forms shall be placed over or be directly supported by the top flanges of beams or girders. The form supporting steel angles may be supported by or attached to the top flanges.

Stay-in-place metal forms shall not be used in bays where longitudinal slab construction joints are located, under cantilevered slabs such as the overhang outside of fascia members, and bridges over a salt-laden body of water with a clearance of less than 15 ft (4.5 m) above mean high water level.

Welding to the top flanges of steel beams and girders is not permitted in the areas where the top flanges are in tension, or as indicated on the plans. Alternate installation procedures shall be submitted addressing this condition.

Drilling of holes in pre-stressed concrete beams or the use of power-actuated tools on the pre-stressed concrete beams for fastening of the form supports to the pre-stressed concrete beams will not be permitted. Welding of the reinforcing steel to the pre-stressed units is not permitted.

All edges of openings cut for drains, pipes, and similar appurtenances shall be independently supported around the entire periphery of the opening.

All fabricated stay-in-place metal forms shall be unloaded, stored at the Project site at least 4 in (100 mm) above the ground on platforms, skids or other suitable supports and shall be protected against corrosion and damage and handled in such a manner as to preclude damage to the forms. Damaged material shall be replaced at no additional cost to the State.

Any exposed form or form support metal where the galvanized coating has been damaged, shall be thoroughly cleaned, wire brushed, then coated with 2 coats of Zinc Dust – Zinc Oxide primer, FS No. TT-P-641d, Type II or another product acceptable to the Engineer.

The forms shall be installed from the topside in accordance with the manufacturer's recommended installation procedures. The form supports shall ensure that the forms retain their correct dimensions and positions during use at all times. Form supports shall provide vertical adjustment to maintain design slab thickness at the crest of corrugation, to compensate for variations in camber of beams and girders and to allow for deflections. Stay-in-place metal forms shall have a minimum depth of the form valley equal to 2 in (50 mm). The forms shall have closed tapered ends. Lightweight filler material shall be used in the form valleys.

All field cutting shall be done with a steel cutting saw or shears including the cutting of supports, closures and cutouts Flame cutting of forms is not permitted.

All welding shall be performed by Department certified welders in accordance with the “Welding” Subarticle in Section 6.03. Welding of forms to supports is not permitted.

The steel form supports shall be placed in direct contact with the flange of stringer or floor beam flanges and attached by bolts, clips, welding where permitted, or other approved means. Form sheets shall not be permitted to rest directly on the top of the stringer or floor beam flanges. The forms shall be securely fastened to form supports with self-drilling fasteners and shall have a minimum bearing length of 1 in (25 mm) at each end. In the areas where the form sheets lap, the form sheets shall be securely fastened to one another by fasteners at a maximum spacing of 18 in (450 mm). The ends of the form sheets shall be securely attached to the support angles with fasteners at a maximum spacing of 18 in (450 mm), or 2 corrugation widths, whichever is less.

The depth of the concrete slab shall be as shown on the plans and the corrugated forms shall be placed so that the top of the corrugation will coincide with the bottom of the deck slab. No part of the forms or their supports shall protrude into the slab. All reinforcement in the bottom reinforcement mat shall have a minimum concrete cover of 1 in (25 mm) unless noted otherwise on the plans.

The completed stay-in-place metal form system shall be sufficiently tight to prevent leakage of mortar. Where forms or their installation are unsatisfactory in the opinion of the Engineer, either before or during placement of the concrete, the Contractor shall correct the defects before proceeding with the work.

(h) Construction Joints: Construction joints other than those shown on the plans will not be permitted without prior approval of the Engineer. In joining fresh concrete to concrete that has already set, the work already in place shall have all loose and foreign material removed, and the surface roughened and thoroughly drenched with water.

All reinforcing steel shall extend continuously through joints. Where unplanned construction joints may be needed, they shall be constructed as directed by the Engineer.

(i) Expansion and Contraction Joints: Expansion and contraction joints shall be constructed at the locations and in accordance with the details specified in the Contract documents. The forming of joint openings shall be dimensioned in accordance with the joint manufacturer’s design requirements. Joints include open joints, filled joints, joints sealed with sealants, joints reinforced with steel armor plates or shapes, paraffin coated joints, and joints with combinations of these features.

For mechanical joint systems, the concrete shall be placed in such a manner that does not interfere with the movement of the joint.

Open joints shall be placed at locations designated on the plans and shall be formed by the insertion and subsequent removal of templates of wood, metal or other

suitable material. The templates shall be so constructed that their removal may be readily accomplished without damage to the work.

Filled joints shall be made with joint filler, the materials for which shall conform to the requirements of the plans and of these specifications.

(j) Pipes, Conduits and Utility Installations: The Contractor shall coordinate the installation of pipes, conduits and utilities as shown on the plans and in conformance with the Contract documents or as directed by the Engineer. The openings accommodating such pipe, conduit and utility installations shall be incorporated into the formwork by the Contractor.

(k) Anchorages: Anchor bolts and systems shall be set to the requirements of the plans and Contract documents. Anchor bolts and systems shall be clean and free of dirt, moisture or other foreign materials at the time of installation. The anchor bolts and systems shall be installed prior to placing concrete.

With the Engineer's approval, the Contractor may install anchorages after placement and setting of the concrete or in formed holes. The anchorages shall be installed into drilled or formed holes having a diameter and a depth suitable to receive the bolts in accordance with the grout manufacturer's requirements. Such holes shall be located to avoid damage to the existing reinforcement. All holes shall be perpendicular to the plane surface. The Contractor shall take every precaution necessary to prevent damage to the concrete due to freezing of water or grout in anchor bolt holes.

(l) Ornament or Reverse Moulds: Ornamental work, when so noted on the plans, shall be formed by the use of reverse moulds. These moulds shall be produced by a qualified manufacturer approved by the Engineer. They shall be built in accordance with the general dimensions and appearance shown on the plans. The Contractor shall submit all detailed drawings, models, or carvings for review by the Engineer before the moulds are made.

The Contractor shall be responsible for their condition at all times, and shall be required to remove and replace any damaged or defective moulds at no additional cost to the State.

The surfaces of the moulds shall be given a coating of form release agent to prevent the adherence of concrete. Any material which will adhere to or discolor the concrete shall not be used.

Form Liners, if required, shall be installed per the Contract Special Provisions.

(m) Removal of Falsework and Forms: The Contractor shall consider the location and character of the structure, the weather, the materials used in the mix, and other conditions influencing the early strength of the concrete when removing forms and falsework. Methods of removal likely to cause damage to the concrete surface shall not be used.

Supports shall be removed in such a manner as to permit the structure to uniformly and gradually take the stresses due to its own weight. For structures of 2 or more spans, the sequence of falsework release shall be as specified in the Contract documents or as approved by the Engineer.

Removal shall be controlled by field-cured cylinder tests. The removal shall not begin until the concrete has achieved 75% of the design compressive strength. To facilitate finishing, side forms carrying no load may be removed after 24 hours with the permission of the Engineer, but the curing process must be continued for 7 days.

When the results of field-cured cylinder tests are unavailable, the following periods,

exclusive of days when the temperature drops below 40ºF (5ºC), may govern the removal of forms:

Form Removal Requirements	
Structure Element	Minimum Time Period
Arch Centers, centering under beams, pier caps, and unsupported elements	14 days
Slabs on grade, Abutments and Walls	24 hours
Columns	2 days
Bridge Decks	28 days

The Contractor may submit alternate methods to determine the in-place strength of the concrete for removal of forms and falsework, for review and approval by the Engineer.

2. Protection from Environmental Conditions: The concrete shall be protected from damage due to weather or other environmental conditions during placing and curing periods. In-place concrete that has been damaged by weather conditions shall be either repaired to an acceptable condition or removed and replaced as determined by the Engineer.

(a) Rain Protection: The placement of concrete shall not commence or continue unless adequate protection satisfactory to the Engineer is provided by the Contractor.

(b) Hot Weather Protection: When the ambient air temperature is above 90ºF (32ºC), the forms, which will come in contact with the mix shall be cooled to below 90ºF (32ºC) for a minimum of 1 hour prior to and 1 hour after completion of the concrete placement by means of a water spray or other methods satisfactory to the Engineer.

(c) Cold Weather Protection: When there is a probability of ambient air temperature below 40ºF (5ºC) during placement and curing, a Cold-Weather Concreting Plan shall be submitted to the Engineer for review and comment. The Plan shall detail the methods and equipment, including temperature measuring devices, that will be used to ensure that the required concrete and air temperatures are maintained.

1. Placement: The forms, reinforcing steel, steel beam flanges, and other surfaces which will come in contact with the mix shall be heated to a minimum of 40ºF (5ºC), by methods satisfactory to the Engineer, for a minimum of 1 hour prior to, and maintained throughout, concrete placement.
2. Curing: For the first 6 days, considered the initial cure period, the concrete shall be maintained at a temperature of not less than 45ºF (7ºC) and the air temperature surrounding the structure shall be maintained at a temperature of not less than 60ºF (16ºC). When the concrete mix includes pozzolans or slag, the initial cure period shall be increased to 10 days. After the initial cure period, the air surrounding the structure shall be maintained above 40º F (5ºC) for an additional 8 days. If external heating is employed, the heat shall be applied and withdrawn gradually and uniformly so that no part of the concrete surface is heated to more than 90ºF (32ºC) or caused to change temperature by more than 20ºF (11ºC) in 8 hours. The Engineer may reduce or increase the amount of time that the structure must be protected or heated based on an indication of in-place concrete strength acceptable to the Engineer.

(d) Additional Requirements for Bridge Decks: Prior to the application of curing materials, all concrete placed on bridge decks shall be protected from damage due

to rapid evaporation by methods acceptable to the Engineer. During periods of low humidity (< 60% relative humidity), sustained winds of 25 mph (40 kph) or more, or ambient air temperatures greater than 80ºF (25ºC) the Contractor shall provide written details of additional measures to be taken during placement and curing.

Protection may include increasing the humidity of the surrounding air with fog sprayers and employing wind-breaks or sun-shades. Additional actions may include reduction of the temperature of the concrete prior to placement, scheduling placement during cooler times of days or nights, or a combination of these actions.

(e) Concrete Exposed to Salt Water: No Construction joints shall be formed between the levels of extreme low water and extreme high water or the upper limit of wave action as determined by the Engineer.

3. Transportation and Delivery of Concrete: All material delivered to the Project shall be supplied by a producer qualified in accordance with M.03. The producer shall have sufficient plant capacity and trucks to ensure continuous delivery at the rate required to prevent the formation of cold joints.

(a) Material Documentation: All vendors producing concrete must have their weigh scales and mixing plant automated to provide a detailed ticket. Delivery tickets must include the following information:

1. State of Connecticut printed on ticket
2. Name of producer, identification of plant
3. Date and time of day
4. Type of material
5. Cubic yards (cubic meters) of material loaded into truck
6. Project number, purchase order number, name of Contractor (if Contractor other than producer)
7. Truck number for specific identification of truck
8. Individual aggregate, cement, water weights (masses) and any admixtures shall be printed on plant tickets
9. Water/cement ratio, and
10. Additional water allowance in gallons (liters) based on water/cement ratio for mix

A State inspector may be present to monitor batching and weighing operations.

The Contractor shall notify the Engineer immediately if, during the production day, there is a malfunction of the recording system in the automated plant or weigh scales.

Manually written tickets containing all required information may be allowed for up to 1 hour after malfunction provided they are signed by an authorized representative of the producer.

(b) Transportation of Mixture: Trucks delivering concrete shall be qualified in accordance with M.03.

If the concrete mix arrives at the Project with a slump lower than allowed by specification, water may be considered as a means to temper concrete to bring the slump back to within specification. This tempering may only be done prior to discharge with the permission of the Engineer. The quantity of water in gallons (liters) added to the concrete cannot exceed the allowance shown on the delivery ticket.

The concrete shall be completely discharged into the forms within 1-1/2 hours from the batch time stamped on the delivery ticket. This time may be extended if the measured temperature of the concrete is below 90ºF (32ºC). This time may also be reduced if the temperature of the concrete is over 90ºF (32ºC).

Rejected concrete shall be disposed of by the Contractor at no cost to the State.

The addition of chemical admixtures or air entrainment admixtures at the Project

site, to increase the workability or to alter the time of set, will only be permitted if prior approval has been granted by the Engineer. The addition of air entrainment admixtures at the Project site will only be permitted by the producer's quality control staff. The Contractor is responsible for follow-up quality control testing to verify compliance with the Specifications.

4. Acceptance Testing and Test Specimens: The Contractor shall furnish the facilities and concrete required for sampling, transport to the testing location in the field, performing field testing and for casting sample cylinders for compressive-strength determinations. The Department will furnish personnel for sampling and casting Acceptance specimens and the number of specimens required will be determined by the Engineer. The equipment for the Department's testing is provided for elsewhere in the Contract.

(a) Temperature, Air Content and Slump: Field testing in accordance with AASHTO T-23, "Making and Curing Concrete Test Specimens in the Field" will be performed at the point of placement and at a frequency determined by the Engineer.

English Units

Standard Mix Class	Air Content	Slump	Concrete Temperature
A (3300 psi)	6.0 +/- 1.5%	4" +/- 1"	60º-90ºF
C (3300 psi)			
F (4400 psi)			
Modified Standards[1]	6.0 +/- 1.5% [2]	4" +/- 1" [2]	
Special Provision Mix[3]	As specified	As specified	

[1] Modifications to Standard Mixes, including mixes placed by pumping, shall be reviewed by the Engineer prior to use. These include but are not limited to the use of chemical admixtures such as high range water reducing (HRWR) admixtures and the use of coarse aggregate sizes for that class not specified in M.03.

[2] If the <u>only</u> modification is the addition of HRWR, the maximum allowable slump shall be 7 in.

[3] All concrete mixes with a mix design strength not shown in the table must be approved by the Engineer on a case-by-case basis. Limits on the plastic properties and strength requirements of these mixes are listed in the Specifications.

Metric Units

Standard Mix Class	Air Content	Slump	Concrete Temperature
A (23MPa)	6.0 +/- 1.5%	100 mm +/- 25mm	15.5º-32ºC
C (23 MPa)			
F (30 MPa)			
Modified Standards[1]	6.0 +/- 1.5% [2]	100mm +/- 25mm [2]	
Special Provision Mix[3]	As specified	As specified	

[1] Modifications to Standard Mixes, including mixes placed by pumping, shall be reviewed by the Engineer prior to use. These include but are not limited to the use of chemical admixtures such as high range water reducing (HRWR) admixtures and the use of coarse aggregate sizes for that class not specified in M.03.

[2] If the <u>only</u> modification is the addition of HRWR, the maximum allowable slump shall be 175 mm.

[3] All concrete mixes with a mix design strength not shown in the table must be approved by the Engineer on a case-by-case basis. Limits on the plastic properties and strength requirements of these mixes are listed in the Specifications.

(b) Acceptance Testing and Compressive Strength Specimens: Concrete samples are to be taken at the point of placement into the forms or molds. Representatives of the Engineer will sample the mix.

The Contractor shall provide and maintain facilities on the Project site, acceptable to the Engineer, for sampling, transporting the initial sample, casting, safe storage and initial curing of the concrete test specimens as required by AASHTO T-23. This shall include but not be limited to a sampling receptacle, a means of transport of the initial concrete sample from the location of the concrete placement to the testing location, a level and protected area of adequate size to perform testing, and a specimen storage container capable of maintaining the temperature and moisture requirements for initial curing of Acceptance specimens. The distance from the location of concrete placement to the location of testing and initial curing shall be 100 ft (30 m) or less, unless otherwise approved by the Engineer.

The specimen storage container described in this section is in addition to the concrete cylinder curing box provided for elsewhere in the Contract documents.

After initial curing, the test specimens will be transported by Department personnel and stored in the concrete cylinder curing box until they can be transported to the Division of Materials Testing for strength evaluation.

(c) Sampling Procedure for Pumping: It is the responsibility of the Contractor to provide concrete that meets required specifications at the point of placement.

Samples of concrete shall be taken at the discharge end of the pump at the point of placement with the exception of underwater concrete. The Contractor may submit an alternate location to provide a sample from the discharge end of the pump with verification showing that the characteristics of the mix will not be altered from that which would have been attained at the point of placement. The Engineer will review the documentation and other extenuating circumstances when evaluating the request.

In the case of underwater concrete the Contractor shall submit the proposed sampling location with the submittals required in 6.01.03-6(f).

(d) Additional field testing: Additional field testing such as density and yield measurements may be required at the time of placement as determined by the Engineer.

5. Progression Cylinders and Compressive Strength Specimens: Progression Cylinders outlined in this section are field cured compressive strength specimens taken for information related to when a structure or segment of a structure can be loaded or put into service, adequacy of curing and protection of concrete in the structure, or when formwork or shoring may be removed from the structure. The information produced from strength results of Progression Cylinders will not be considered for acceptance of the concrete.

The personnel, equipment, and molds for sampling, casting, curing and testing of Progression Cylinders shall be furnished by the Contractor at no expense to the Department.

Sampling, casting, and field curing of the specimens shall be performed in accordance with AASHTO T23 by an ACI Concrete Field Testing Technician Grade 1 or higher and will be witnessed by a representative of the Department.

The sample shall be taken at the point of placement into the forms or molds from one (1) or more of the same truck loads that an Acceptance sample is taken from.

A minimum of 2 cylinder results will be used to determine in-place strength.

Compression testing shall be performed in accordance with AASHTO T-22 by personnel approved by the Engineer.

A Certified Test Report in accordance with Article 1.06.07 shall be provided to the Engineer reporting the Progression Cylinder test results. A copy of the results of the compressive strength testing shall be provided to the Engineer at least 24 hours prior to any Project activity that the results may control.

6. Handling and Placing Concrete: Concrete shall be handled, placed, and consolidated by methods acceptable to the Engineer that will not segregate the mix and shall result in a dense homogeneous concrete. The methods used shall not cause displacement of reinforcing steel or other materials to be embedded in the concrete. Concrete shall not be placed until the forms and all materials have been inspected by the Engineer. All mortar from previous placements, debris, and foreign material shall be removed from the forms and steel prior to commencing placement. The forms and subgrade shall be thoroughly moistened with water immediately before concrete is placed. All water that has ponded within the forms shall also be removed. Temporary form spreader devices shall not be left in place.

All laitance or unsound material shall be removed before placing substructure concrete onto the surface of any concrete placed underwater.

Placement of concrete for each section of the structure shall be performed continuously between construction or expansion joints as shown on the plans. The delivery rate, placing sequence and methods shall be such that fresh concrete is always placed and consolidated against previously placed concrete before initial set has occurred. The temperature of the concrete mixture during placement shall be maintained between 60ºF (16ºC) and 90ºF (32ºC). During and after placement of concrete, care shall be taken not to damage the concrete or break the bond with reinforcing steel. Platforms for workers and equipment shall not be supported directly on any reinforcing steel. Forces that may damage the concrete shall not be applied to the forms or reinforcing steel.

(a) Sequence of Placement: The sequence of placement shall be in accordance with the Contract documents or as permitted by the Engineer.

Concrete for integral horizontal members, such as caps, slabs, or footings shall not be placed until the concrete for the columns, substructure, culvert walls and similar vertical members has achieved sufficient strength as stated in 6.01.03-1(m).

The concrete in arches shall be placed in such a manner as to load the formwork uniformly and symmetrically.

The base slab or footings of cast-in-place box culverts shall reach sufficient strength before the remainder of the culvert is constructed.

(b) Placement Methods: The Contractor shall notify the Engineer at least 24 hours in advance of intention to place concrete.

Vibrators shall not be used to shift the fresh concrete horizontally. Vibrators shall be adequate to consolidate the concrete and integrate it with the previous lift.

The rate of concrete placement must not produce loadings that exceed those considered in the design of the forms.

The use of chutes and pipes for conveying concrete into the forms must be reviewed by the Engineer. Chutes shall be clean, lined with smooth watertight material and, when steep slopes are involved, shall be equipped with baffles or reverses. When the discharge must be intermittent, a hopper or other device for regulating the discharge shall be provided.

Aluminum shall not be permanently incorporated into the concrete unless otherwise specified.

When placing operations involve dropping the concrete more than 5 ft (1500 mm), the Contractor shall take action to prevent segregation of the mix and spattering of

mortar on steel and forms above the elevation of the lift being placed. This restriction shall not apply to cast-in-place pilings.

When using stay-in-place forms, concrete shall not be dropped more than 3 ft (1000 mm) above the top of the forms, and the concrete shall be discharged directly over the beams or girders.

(c) Pumping: The Contractor shall use equipment specifically manufactured to pump concrete mixes and that meets the needs of the specific concrete placement.

(d) Consolidation: Unless otherwise specified, all concrete, except concrete placed under water, shall be sufficiently consolidated by mechanical vibration immediately after placement.

The Contractor shall provide a sufficient number of commercially available mechanical immersion type vibrators to properly consolidate the concrete immediately after it is placed in the forms unless external form vibrators are used. The Contractor shall have an adequate number of operable vibrators available in case of breakdown.

External form vibrators may be used if submitted prior to concrete placement and reviewed by the Engineer.

Vibration shall not be applied directly to the reinforcement or hardened concrete. Special care shall be taken in placing and consolidating concrete around ornamental moulds, form liners and other embedded items. The vibrator shall not touch these items at any time.

(e) Additional Requirements for Bridge Decks: At least 15 days before the erection of the screed rails, the Contractor shall submit screed erection plans, grades and sequence of concrete placement and proposed rate of placing concrete for review by the Engineer. These plans shall include details of equipment to be used in the placement and finishing of the concrete, including the number and type of personnel who will be engaged in placing the concrete. The screed equipment shall be a commercially available vibratory system. The use of wooden screeds is prohibited.

When setting screed rails for mechanical finishing, the Contractor shall take into consideration and make proper allowances for the deflection of the bridge superstructure due to all operations.

Screed and runway supports shall not be located on any stay-in-place metal form sheets, form supports or reinforcing steel. The Contractor shall operate the mechanical screed at least twenty-four (24) hours prior to actual placement of the concrete to verify deck survey and equipment operations to the satisfaction of the Engineer.

Concrete shall be deposited in a uniform manner across the entire width being placed, and only 2 passes of the transverse screed will be permitted over a given deck area, unless otherwise allowed by the Engineer.

If the Contractor proposes to place concrete outside of daylight hours, an adequate lighting system must be provided.

Concrete shall be deposited in accordance with the placement sequence as noted on the plans. If no sequence is indicated, the Contractor shall provide a placement sequence to the Engineer for review. The placement sequence shall proceed in such a manner that the total deflection or settlement of supporting members, and final finishing of the surface will occur before initial set of the concrete takes place.

At construction joints, concrete shall not be placed against the previously placed concrete for at least 12 hours unless otherwise allowed by the Engineer.

(f) Underwater Placement: Concrete may only be placed under water within a cofferdam unless otherwise specified in the documents or otherwise allowed by the Engineer. Placement shall begin following inspection and acceptance of the depth and character of the foundation material by the Engineer.

Underwater concrete mixes are considered non-standard designs and shall be submitted to the Engineer for approval. Typically a minimum of 10% additional cement than comparable non-underwater mixes will be required.

Underwater concrete shall be placed continuously with the surface of the concrete kept as horizontal as practical. To ensure thorough bonding, each succeeding layer shall be placed before the preceding layer has taken initial set. For large concrete placements, more than 1 tremie or pump shall be used to ensure compliance with this requirement.

Mass concrete placement requirements, outlined in 6.01.03-6(g), do not apply to underwater concrete.

To prevent segregation, underwater concrete shall be placed in a compact mass, in its final position, by means of a tremie, concrete pump, or other approved method and shall not be disturbed. Still water shall be maintained at the point of deposit. Cofferdams shall be vented during the placement and curing of the concrete to equalize the hydrostatic pressure and thus prevent flow of water through the concrete.

If a tremie is used, the method of depositing the concrete shall be detailed in a working drawing submitted to the Engineer for review. The tube shall have watertight couplings and shall permit the free movement of the discharge end over the area of the work.

(g) Mass concrete placement: Mass concrete placement shall be defined as any placement, excluding underwater concrete placement, in which the concrete being cast has dimensions of 5 ft (1500 mm) or greater in each of 3 different directions. For placements with a circular cross-section, a mass concrete placement shall be defined as any placement that has a diameter of 6 ft (1800 mm) or greater and a height of 5 ft (1500 mm) or greater. For all mass concrete placements, the mix temperature shall not exceed 85°F (30°C) as measured at point of discharge into the forms.

Any special concrete mix design proposed by the Contractor to meet the above temperature requirements shall be submitted to the Engineer for review.

7. Finishing Plastic Concrete: Unless otherwise specified in the Contract documents, after concrete has been consolidated and prior to final curing, all surfaces of concrete that are not placed against forms shall be struck-off to the planned elevation or slope. The surface shall be finished by floating with an acceptable tool. While the concrete is still in a workable state, all construction and expansion joints shall be tooled with an edger. Joint filler shall be left exposed. For requirements on float finish, refer to 6.01.03-10, “Finishing Concrete Surfaces.”

After completion of the placing and finishing operation and for at least 12 hours after the concrete has set, the Contractor shall not operate any equipment in the immediate vicinity of the freshly placed concrete if, in the opinion of the Engineer, it could cause excessive vibration, movement or deflection of the forms.

The addition of water to the surface of the concrete to assist in finishing operations will not be permitted.

(a) Bridge Decks: After the concrete has been consolidated and brought to the proper elevation by the screed machine, it shall be finished by use of a suitable float. The Contractor shall not disturb the fresh concrete after it has been finished.

(b) All finishing work, including the application of the fog spray and placement of the curing mats, shall be performed from work bridges supported above the deck surface. A work bridge shall be made available to the Engineer for inspection of the concrete work.

Surfaces that are to be covered with a waterproofing membrane shall be finished to a smooth surface, free of mortar ridges and other projections and in accordance with the membrane manufacturer's recommendations.

Unless otherwise noted in the Contract, the concrete wearing surfaces shall be given a skid-resistant texture by dragging, brooming, tining, or by a combination of these methods These methods shall be done after floating and at such time and in such manner that the desired texture will be achieved while minimizing displacement of the larger aggregate particles.

1. Dragging: The surface shall be finished by dragging a seamless strip of damp burlap over the surface. The burlap to be dragged shall consist of sufficient layers and have sufficient length in contact with the concrete to slightly groove the surface. The burlap shall be drawn longitudinally along the surface in a slow manner so as to leave an even texture. The burlap shall be kept damp, clean, and free of particles of hardened concrete. The Contractor may propose an alternate material for the Engineer's consideration.
2. Tining: Tining shall be in a transverse direction using a wire broom, comb, or float having a single row of tines or fins. The tining grooves shall be between 1/16 in (1.5 mm) and 3/16 in (5 mm) wide and between 1/8 in (3 mm) and 3/16 in (5 mm) deep, spaced 1/2 in (12.5 mm) to 3/4 in (20 mm) on centers. Tining shall be discontinued 12 in (300 mm) from the curb line on bridge decks. The area adjacent to the curbs shall be given a light broom finish longitudinally. As an alternative, tining may be achieved using a machine designed specifically for tining or grooving concrete pavements.

   The transverse grooving shall be performed when the grooves can be formed to a maximum depth of 3/16 in (5 mm) with relative ease and without the walls of the grooves closing in on each other. The tining shall be aligned so as to prevent overlapping of grooves in any 2 successive transverse passes. The Contractor shall measure the depth of the grooves in the presence of the Engineer with an appropriate device to ensure compliance.

(b) Surface Testing and Correction: The completed surface shall be constructed in accordance with grades and cross slopes shown on the plans. The entire surface shall be checked by the Contractor in the presence of the Engineer, with an acceptable 10 ft (3 m) straightedge.

1. The surface shall not vary more than +/- 1/8 in (3 mm) per 10 ft (3 m) for decks which will not be covered with an overlay.
2. The surface shall not vary more than +/- 1/4 in (6 mm) per 10 ft (3 m) for decks which will be covered with an overlay.

Variances greater than these, which, in the opinion of the Engineer, may adversely affect the riding qualities of the surface shall be corrected, and this shall be done at the expense of the Contractor. The Contractor shall submit a corrective procedure to the Engineer for review and approval. The procedure shall correct such irregularities by methods such as, but not limited to, concrete planing or grooving.

8. Bearing Surfaces: Concrete surfaces under metallic masonry plates and elastomeric bearings shall have a float finish. After the concrete has set, the area which will be in contact with the masonry plate shall be ground as necessary to provide

full and even bearing. The finished surface shall not vary from a straightedge laid on the surface in any direction within the limits of the masonry plate by more than 0.0625 in (1.5 mm). Surfaces which fail to conform shall be ground or filled until acceptable to the Engineer.

9. Curing Concrete: All newly placed concrete shall be cured so as to prevent loss of water by use of the methods specified. The Engineer may request that the Contractor furnish a curing plan.

The duration of the initial and final curing period in total shall continue uninterrupted for a minimum of 7 days.

(a) Curing Methods:

1. Forms-In-Place Method: Formed surfaces of concrete may be cured by retaining the forms in place without loosening. During periods of hot weather, water shall be applied to the forms until the Engineer determines that it is no longer required.
2. Water Method: Exposed concrete surfaces shall be kept continuously wet by ponding, spraying, or covering with materials that are kept continuously and thoroughly wet. Such materials may consist of cotton mats, multiple layers of burlap, or other approved materials that do not discolor or otherwise damage the concrete.
3. Waterproof Cover Method: This method shall consist of covering exposed surfaces with a waterproof sheet material to prevent moisture loss from the concrete. The concrete shall be wet at the time the cover is installed. The sheets shall be of the widest practicable width and adjacent sheets shall overlap a minimum of 6.0 in (150 mm) to form a waterproof cover of the entire concrete surface and shall be adequately secured. Broken or damaged sheets shall be immediately repaired and the concrete shall be remoistened.

(b) Additional Requirements for Bridge Decks:

1. Curing Plan: The Contractor shall submit to the Engineer, at least 14 days prior to the placement of concrete for the bridge deck, a detailed curing plan that describes the following:
   A. the initial and final curing durations,
   B. equipment and materials to be used for curing concrete and monitoring concrete temperature, and
   C. proposed primary and secondary water and heat sources
2. Initial Curing Period: A water fog spray shall be used by the Contractor from the time of initial placement until the final curing period begins. The amount of fog spray shall be strictly controlled so that accumulations of standing or flowing water on the surface of the concrete shall not occur.

   Should atmospheric conditions render the use of fog spray impractical, the Contractor shall request approval from the Engineer to use a curing compound that meets the requirements of M.03 in lieu of a fog spray. The application shall be in accordance with the manufacturer's recommendation and be compatible with the membrane waterproofing.
3. Final Curing: After completion of finishing and as soon as any bleed water has dissipated and the concrete reaches sufficient strength to avoid marring, the Final curing period shall begin and the entire concrete surface shall be covered with water-retaining materials such as cotton mats, multiple layers of burlap, or other materials approved by the Engineer. Materials used shall be kept saturated by means of an acceptable sprinkler or wetting system.

The Contractor may cover the wet water-retaining material with a suitable polyethylene film to minimize evaporation during the curing period. The use of the polyethylene film does not relieve the Contractor from maintaining saturation of the curing materials.

4. Temperature Monitoring: The internal temperature of the concrete shall be monitored with a calibrated continuous recording thermometer for a minimum of 7 days. The air temperature at the concrete surface or the air temperature between the concrete surface and its protective covering shall be monitored with a minimum of 1 recording thermometer.

   The number and placement of the thermometers will be determined by the Engineer. A minimum of 2 thermometers per concrete placement shall be provided by the Contractor.

   The following types of thermometers shall be used to monitor curing temperatures:

   A. Continuously Recording Thermometer: The thermometer shall be capable of continuously recording temperatures within a range of -4 ºF to 122 ºF (-20°C to 50°C) for a minimum of 24 hours.
   B. Maximum–Minimum Recording Thermometer: For all placements, the thermometer shall be capable of recording maximum and minimum temperatures in a range of -4 ºF to 122 ºF (-20°C to 50°C).

10. Finishing Concrete Surfaces: Any minor repairs due to fins, bulges, offsets and irregular projections shall be performed immediately following the removal of forms. For areas of newly placed concrete that are honeycombed or segregated the Contractor shall provide a written corrective procedure for review by the Engineer prior to the work being performed. Construction and expansion joints in the completed work shall be left carefully tooled and free of mortar and concrete. The joint filler shall be left exposed for its full length with clean and true edges.

The cavities produced by form ties and all other holes, broken corners or edges, and other defects shall be cleaned, saturated with water, pointed and trued with a mortar conforming to M.11.04. Cement similar in color to the exposed surface being repaired shall be added to the mortar. Mortar used in pointing shall be used within 1 hour of mixing. The concrete shall be finished as defined below if required and the cure continued as previously specified in "Curing Concrete."

Finishing work shall not interrupt the curing period unless permitted by the Engineer. The curing period may be extended to provide the minimum total number of days required.

Concrete surface finishes shall be classified as follows:

(a) Float Finish: This finish shall be achieved by placing an excess of material in the form and removing or striking off of such excess forcing the coarse aggregate below the mortar surface. Concave surfaces in which water will be retained will not be allowed. After the concrete has been struck off, the surface shall be thoroughly worked and floated. Before this last finish has set, the surface shall be lightly stripped with a fine brush to remove the surface cement film, leaving a fine-grained, smooth, but sanded texture. Curing, as specified elsewhere, shall follow. Any surfaces that will support appurtenances such as light standards, railing, or fences shall be finished in accordance with 6.01.03-8, “Bearing Surfaces.”

(b) Rubbed Finish: The initial rubbing shall only be allowed within 3 days after placement. The entire surface shall be thoroughly wet with a brush and rubbed with a No. 16 Carborundum Stone or an abrasive of equal quality, bringing the surface to a paste. The rubbing shall be continued sufficiently to remove all form

marks and projections, producing a smooth, dense surface without pits or irregularities. The paste formed by the rubbing may be finished by stripping with a clean brush, or it may be spread uniformly over the surface and allowed to re-set. If all or portions of the rubbed surface are unacceptable to the Engineer or a rubbed finish is not provided within 3 days after removal of forms, the Contractor will be directed to provide a grout clean down finish.

(c) Grout Clean-Down Finish: As soon as all cavities have been filled as required elsewhere and the cement mortar has set sufficiently, grout clean-down shall be performed. All burrs, unevenness, laitance, including that in air holes, and any other material which will adversely affect the bond of the grout to the concrete, shall be removed by acceptable methods. This cleaning shall be done from the top or uppermost part of the surface to be finished to the bottom.

A mixture of a fine aggregate and Portland cement shall be thoroughly blended while dry. The proportions shall be such that when mixed with the proper amount of water, the color will match that of the concrete to be finished. Water shall be added to this mixture in an amount which will bring the grout to a workable thick paint-like consistency.

The surface to be treated shall be thoroughly wetted with a sufficient amount of water to prevent the absorption of water from the grout. Grout shall then be applied to the wetted surface before setting of the grout occurs. Grout which has set shall not be re-tempered and shall be disposed of by the Contractor at no cost to the State.

The grout shall be uniformly applied over the entire surface, completely filling all air bubbles and holes. Immediately after applying the grout, the surface shall be floated with a suitable float, scouring the surface vigorously. While the grout is still plastic, all excess grout shall be removed.

After the final rubbing is completed and the surface has dried, it shall be rubbed to remove loose powder and shall be left free from all unsound patches, paste, powder, and objectionable marks. Wetting, application and removal of excess grout shall be completed in 1 work shift.

All finished surfaces shall be cured for a minimum of 24 hours. Horizontal surfaces shall have a float finish and vertical exposed surfaces shall have a rubbed finish. A grout clean down finish may be substituted for a rubbed finish as noted in this section or as directed by the Engineer.

11. Mortar, Grout, Epoxy and Joint Seal

(a) Mortar and Grout: This work consists of the making and placing of mortar and grout. At least 48 hours prior to the planned use, a copy of the installation instructions and MSDS sheet(s) shall be provided to the Engineer for review and concurrence of their applicability and for verification of proper hole sizes in concrete structures. Such uses include mortar for filling under masonry plates, mortar used to fill voids and repair surface defects, grout used to fill sleeves for anchor bolts, and mortar and grout for other such uses where required or approved.

Concrete areas to be in contact with the mortar or grout shall be cleaned of all loose or foreign material that would in any way prevent bond, and the concrete surfaces shall be flushed with water and allowed to dry until no free-standing water is present.

The mortar or grout shall completely fill and shall be tightly packed into recesses and holes, on surfaces, under structural members, and at other locations specified. After placing, all surfaces of mortar or grout shall be cured as previously specified in 6.01.03-9(a)-2 “Curing Concrete – Water Method," for a period of not less than 3 days.

(b) Epoxy: The epoxy shall be prepared and placed in accordance with the manufacturer's directions and with the equipment prescribed by the manufacturer. Instructions furnished by the supplier for the safe storage, mixing, handling and application of the epoxy shall be followed. Contents of damaged or previously opened containers shall not be used.

(c) Joint Seal: This work consists of sealing joints where shown on the plans or as otherwise directed by the Engineer.

Before placement of the sealing material, the joints shall be thoroughly cleaned of all scale, loose concrete, dirt, dust or other foreign matter. Projections of concrete into the joint space shall be removed. The joint shall be clean and dry before the sealing compound is applied.

The joint sealant shall be prepared and placed in accordance with the manufacturer's directions and with the equipment prescribed by the manufacturer. The sealing compound shall be flush with, or not more than 1/8 in (3 mm) above the adjacent surface of concrete, cutting off all excess compounds after the application. The joints shall be sealed in a neat and workmanlike manner and when the work is completed, the joints shall effectively seal against infiltration of moisture and water.

The Contractor shall arrange for, and have present at the commencement of the joint-sealing operation, a technically competent manufacturer’s representative knowledgeable in the methods of installation of the sealant. The Contractor shall also arrange to have the representative present at such other times as the Engineer may request.

(d) Closed Cell Elastomer: The closed cell elastomer shall be of the thickness, size and type specified and installed as shown on the plans and shall be in accordance with M.03.

12. Application of Loads: Loads shall not be applied to concrete structures until the concrete has attained sufficient strength and, when applicable, sufficient pre-stressing and post tensioning has been completed, so that damage will not occur. The means to determine when the concrete has attained sufficient strength shall be the use of Progression cylinders as defined elsewhere in this specification, or other means approved in advance by the Engineer.

(a) Earth Loads: The placement of backfill shall not begin until the concrete is cured and has reached at least 80% of its specified strength unless otherwise permitted by the Engineer. The sequence of placing backfill around structures shall minimize overturning or sliding forces and flexural stresses in the concrete.

(b) Construction Loads: Light materials and equipment may be hand carried onto bridge decks only after the concrete has been in place at least 24 hours providing curing is not interfered with and the surface texture is not damaged.

Prior to the concrete achieving its specified compressive strength, any other live or dead loads imposed on existing, new, or partially completed portions of structures, shall not exceed the reduced load carrying capacity of the structure, or portion of structure. The Contractor may be required to submit calculations to the Engineer that verify these requirements are being met. The compressive strength of concrete (f' c) to be used in computing the load-carrying capacity shall be the smaller of the actual field compressive strength at the time of loading or the specified design strength of the concrete. The means to determine the actual field compressive strength shall be approved by the Engineer.

For post-tensioned structures, no live or dead loads shall be allowed on any span until the steel for that span has been tensioned.

(c) Loading of Completed Elements: Precast concrete or steel girders shall not be placed on substructure elements until the substructure concrete has attained 85% of its specified strength.

No load shall be allowed on mortar or grout that has been in place less than 72 hours.

(d) Traffic Loads: The concrete deck will not be opened to traffic until at least 14 days after the last placement of deck concrete and until such concrete has attained its specified strength.

13. Dispute Resolution: The basis of any dispute resolution is side-by-side and quality control testing by the Contractor or the Contractor's representative. The Contractor and Engineer should perform independent testing on the material to reasonably establish the true characteristics of the material at the time of delivery. Absent of Contractor QC testing, the Engineer's test results will apply to the quantity of concrete represented by the sample, not to exceed 75 c.y. (60 cu.m).

(a) Air Content: Contractor QC Testing must be performed by personnel qualified by The American Concrete Institute as an ACI Concrete Field Testing Technician Grade 1 or higher and performed in accordance with AASHTO T-23. If the Contractor's test results vary from those of the Engineer, the Contractor shall immediately notify the Engineer of the difference and work cooperatively to determine the reasonable cause and recognize the valid test. Should there be agreement, the result of the valid test will be used for acceptance and adjustment purposes for that lot of material. Should there not be an agreement as to the valid test, an additional set of tests should be performed. Results of all valid tests on the same lot may be averaged and used for acceptance and adjustment purposes. Should the Contractor wish to perform additional QC testing on subsequent material, the lot sizes may be adjusted to the amount of material included in that specific delivery. Any such QC testing must be witnessed and agreed to by the Engineer.

(b) Compressive Strength: Contractor QC testing for compressive strength must be performed in accordance with AASHTO T-22 by personnel approved by the Engineer. Samples used to dispute the Engineer's test results must be made simultaneously and from the same batch of concrete. Should the Contractor wish to pursue a dispute resolution with regard to compressive strength, the Contractor shall submit in writing to the Engineer all test results, control charts, or other documentation that may be useful in determining if the specific lot(s) of material met the Contract specifications. The Engineer will consider the submittal and may average specific test results on the disputed lot(s) for acceptance and adjustment purposes. Destructive testing of any kind on the placed concrete structure will not be allowed.

6.01.04—Method of Measurement: This work will be measured for payment as follows:

1. Concrete: The quantity of concrete will be the actual volume in cubic yards (cubic meters) of the specified class or classes, with the exception of underwater concrete, completed and accepted within the neat lines as shown on the plans or as ordered by the Engineer.

When concrete is placed against bedrock, a maximum of 6 additional inches (150 additional millimeters) beyond the neat lines can be measured for payment.

No deduction will be made for panels, form liners, reinforcing bars, structural steel

shapes or for pile heads. There will be no deduction made for the volume occupied by culvert and drainage pipes, scuppers, weep holes, public utility structures or any other opening, unless the surface area of any such single opening is 9 s.f. (1 sq.m) or more.

In the case of culverts or drainage pipes, the computation of the surface area will be based on the nominal diameter of the pipe, disregarding the thickness of the shell.

Miscellaneous materials necessary for completion of the work such as felt, mortar, grout, epoxy, joint seal, paraffin coating and closed cell elastomer will not be measured for payment.

Incidental work such as forming for anchor bolts, utilities, keyways, and sampling and testing will not be measured for payment.

2. Underwater Concrete: When underwater concrete is used, it will be measured by the volume in cubic yards (cubic meters) within the actual horizontal limits of the cofferdam and between the elevations established by the Engineer.

3. Joint Filler: This material will be measured by the area in square feet (square meters) of the joint filler, of the type and thickness specified, actually installed and accepted.

6.01.05—Basis of Payment: Payment for this work will be made as follows:

1. Concrete: Progress payments may be allowed for completed major labor elements of work such as forming, placing and curing. Prior to placement, the Contractor shall submit a proposed schedule of values for review and approval by the Engineer.

Payment for any lot of concrete allowed to remain in place will be adjusted when the field and laboratory testing of the material is completed. The quantity of concrete in each lot will be a maximum of 75 c.y. (60 cu.m). Payment for each lot of concrete will be adjusted based on the results of the Acceptance testing performed by the Engineer.

The following pay factors apply for Standard and Modified Standard Mix classes with regard to entrained air content:

Air Pay Factors

Measured air (%)		Pay factor (%)
4.5 to 7.5		1.00 (100)
4.3 and 4.4	7.6 and 7.7	0.98 (98)
4.1 and 4.2	7.8 and 7.9	0.96 (96)
3.9 and 4.0	8.0 and 8.1	0.94 (94)
3.7 and 3.8	8.2 and 8.3	0.92 (92)
3.5 and 3.6	8.4 and 8.5	0.90 (90)
Concrete lots with less than 3.5% or greater than 8.5% entrained air will be rejected.		

The following pay factors apply for Standard and Modified Standard Mix classes with regard to compressive strength:

Strength Pay Factors

Compressive Strength (%)	Pay factor (%)
95 or greater	1.00 (100)
90 to 94.9	0.95 (95)
85 to 89.9	0.90 (90)
Concrete lots with less than 85% specified strength will be rejected.	

The payment adjustment value for entrained air and 28-day strength for any lot of concrete that is allowed to remain in-place is determined using the formulas below. An index price of $400.00 per c.y. (cu.m) shall be used to calculate each adjustment. The total adjustment value will be the sum of each individual adjustment value and will be deducted from the payment for the appropriate item.

English Units:	**Metric Units:**
Adjustment (air) = (1 - air pay factor) x $400/c.y. x lot size (c.y.)	Adjustment (air) = (1 - air pay factor) x $400/cu.m x lot size (cu.m)
Adjustment (strength) = (1 - strength pay factor) x $400/c.y. x lot size (c.y.)	Adjustment (strength) = (1 - strength pay factor) x $400/cu.m x lot size (cu.m)
Total Adjustment = Adjustment (air) + Adjustment (strength)	

The Contractor shall request permission from the Engineer to remove and replace a lot(s) of concrete to avoid a negatively adjusted payment. Any replacement material will be sampled, tested and evaluated in accordance with this specification.

No direct payment will be made for any labor, equipment or materials used during the sampling and testing of the concrete for Progression or Acceptance. The cost shall be considered as included in the general cost of the work or as stated elsewhere in the Contract. The work of transporting the concrete test specimens, after initial curing, for Acceptance testing will be performed by the Department without expense to the Contractor.

This material will be paid for at the Contract unit price per cubic yard (cubic meter) less any adjustments, for the specified class or classes, complete in place, which price shall include all materials, equipment, tools, labor and work incidental thereto, including heating, all admixtures, joint sealer, roofing felt and closed cell elastomer, and any miscellaneous materials such as metal flashing and metal used in expansion joints and bearings.

2. Underwater Concrete: When this class of concrete is used, it will be paid for at the Contract unit price per cubic yard (cubic meter) for "Underwater Concrete," complete in place, which price shall include all materials, equipment, tools, labor and work incidental thereto.

3. Joint Filler: Expansion joint filler will be paid for at the Contract unit price per square foot (square meter) for "Joint Filler for Bridges" of the type and thickness specified, complete in place, which price shall include all materials, equipment, tools, labor and work incidental thereto.

Pay Item	Pay Unit
Concrete (Class A, C, F)	c.y. (cu.m)
Underwater Concrete	c.y. (cu.m)
Joint Filler for Bridges (Thickness and Type)	s.f. (s.m.)

CONNECTICUT
SUPPLEMENTAL SPECIFICATION
SECTION 6.03
STRUCTURAL STEEL

Delete the entire section and replace it with the following:

SECTION 6.03
STRUCTURAL STEEL

6.03.01—Description: Work under this item shall consist of furnishing, fabricating, transporting, storing, handling and erecting of structural steel of the type and size designated, as shown on the plans, as directed by the Engineer and in accordance with these Specifications.

All work except as stated in the following paragraph shall conform to the requirements of the AASHTO LRFD Bridge Construction Specifications and the ANSI/AASHTO/AWS D1.5 – Bridge Welding Code.

All work subject to railroad loading shall conform to AREMA and the ANSI/AASHTO/AWS D1.5 – Bridge Welding Code.

6.03.02—Materials: The materials for this work shall conform to the requirements of Section M.06.

Materials for this work shall be stored off the ground before, during, and after fabrication. It shall be kept free from dirt, grease and other contaminants and shall be reasonably protected from corrosion. In addition, weathering steel shall be stored as to allow free drainage and promote the development of the oxide coating and a uniform appearance.

6.03.03—Construction Methods:

1. **Pre-qualification:**

   (a) Fabricators producing material for Department projects under this item are required to have as a minimum, an active AISC Certification for Simple Steel Bridges. For fabrication of material for use on bridges other than un-spliced rolled beam bridges, AISC Major Steel Bridge Certification is required. If so noted on the plans, additional AISC endorsement for fabrication of fracture critical members is also required.

   (b) Field Welders: Prior to working on material for Department projects under this Specification, all field welders, field welding operators, and field tackers must possess a valid welder certification card issued by the Department's Division of Materials Testing. If such person has not been engaged in welding operations on a Department project or project acceptable to the Department within a period of six (6) months, or cannot produce an approved welding certificate dated within the previous twelve (12) months from a welding agency acceptable to the Engineer, the field welder shall be required to re-qualify through examination. The Engineer may require re-qualification of anyone whose quality of work is in question.

2. **Submittals:**

   (a) Shop Drawings: Prior to any fabrication, the Contractor shall submit shop

drawings in accordance with Article 1.05.02 to the Engineer for review. Shop drawings shall include a cambering procedure and diagram. In the case of trusses, the Contractor is responsible for calculation of the camber (lengthening and shortening) of all truss members.

(b) Shop Schedule: The Contractor shall submit a detailed shop fabrication schedule to the Engineer for review within 30 days of the Notice to Proceed unless otherwise agreed to by the Engineer. At a minimum the schedule shall include the start date, milestone dates, and completion date. Any significant changes shall be brought to the attention of the Engineer immediately.

(c) Welding Procedures: Prior to start of fabrication, all welding procedures shall be submitted to the Engineer for review.

(d) Working Drawings for Falsework and Erection of Structural Steel: Prior to erecting any steel fabricated under this Specification, the Contractor shall submit drawings and supporting calculations, including erection stresses, in accordance with Article1.05.02 to the Engineer. The design of temporary supports and falsework shall conform to the *AASHTO Specifications,* the *AASHTO Guide Design Specifications for Bridge Temporary Works* or any other standard acceptable to the Engineer. Falsework shall be of sufficient rigidity and strength to safely support all loads imposed and to produce in the finished structure the lines and grades indicated in the Contract.

The working drawings submittal shall include at a minimum:

- Title block with Contract number, Project identification number (PIN), town, and structure number and name.
- Plan of the work area showing support structures, roads, railroad tracks, Federal and State regulated areas as depicted on the plans, utilities or any other information relative to erection.
- A detailed narrative describing the erection sequence for main members and secondary members (cross frames, diaphragms, lateral bracing, portals, etc.), noting use of holding cranes or temporary supports, falsework, or bents.
- Delivery location of each girder.
- Location of each crane for each pick.
- Capacity chart for each crane and boom length used in the work.
- The capacity of the crane and of all lifting and connecting devices shall be adequate for the total pick load including spreaders and other materials. In the area of railroads and navigable waterways, the capacity shall be as required by Amtrak, Metro North, U.S. Coast Guard or other regulatory authorities. No picks shall be allowed over vehicular or pedestrian traffic unless otherwise noted on the plans or permitted by the Engineer.
- Pick point location(s) on each member.
- Lifting weight of each member including clamps, spreader beams, etc.
- Lift and setting radius for each pick (or maximum lift radius).
- Description of lifting devices or other connecting equipment.
- Girder tie-down details or other method of stabilizing erected girders.
- Bolting requirements, including the minimum number of bolts and erection pins required to stabilize members during the erection sequence.
- Blocking details for stabilizing members supported on expansion bearings and on bearings that do not limit movement in the transverse direction.

- The method and location for temporary supports for field spliced or curved girders, including shoring, false work, holding cranes, guys, etc. The Engineer will review, but not approve details of temporary supports. The design, erection, and stability of these supports shall be the sole responsibility of the Contractor.
- Offsets necessary to adjust expansion bearings during erection to provide for temperature variance and dead load rotation.

The following notes shall be placed on the Erection Drawings:

- Cranes shall be operated in accordance with the Connecticut Department of Public Safety regulations.
- The Contractor shall be responsible for verifying the weight of each lift and for insuring the stability of each member during all phases of erection.
- Members shall be subject to only light drifting to align holes. Any drifting that results in distortion of the member or damage to the holes will be cause for rejection of the member.
- Field reaming of holes shall not be performed unless required by the Contract Drawings or approved by the Engineer.

The Contractor shall submit these documents to the Engineer at least 60 calendar days in advance of their proposed use. If the proposed method of erection requires additional members or modifications to the existing members of the structure, such additions and modifications shall be made by the Contractor at no expense to the State.

3. Shop Fabrication: Unless otherwise shown on the plans or indicated in the Special Provisions, Structural Steel shall be fabricated in accordance with the AASHTO LRFD Bridge Construction Specifications, amended as follows:

(a) Notification: The Contractor shall submit written notification to both the Engineer and the Division Chief (OOC) not less than 30 calendar days prior to start of fabrication. No material shall be manufactured or worked in the shop before the Engineer has been so notified. The notification shall include the name and location of the fabrication shop where the work will be done so that arrangements can be made for an audit of the facility and the assignment of a Department Quality Assurance inspector.

(b) Camber: All members shall be cambered prior to heat curving and painting. Rolled beams shall be heat cambered by methods approved by the Engineer. Plate girders shall be cambered by cutting the web to the prescribed shape with allowances for shrinkage due to cutting, welding, and heat curving. The fabricator is responsible to determine what allowances should be made. Rolled, plate-rolled, or fabricated sections shall be cambered to the total amount shown on the plans and within the camber deviation tolerances permitted for welded beams and girders, as indicated in the ANSI/AASHTO/AWS D1.5 Bridge Welding Code. The Contractor must submit to the Engineer for approval, a plan for corrective action if the actual camber is not within tolerance.

(c) Welding: Unless otherwise indicated in the Contract, all work shall be performed in accordance with ANSI/AASHTO/AWS D1.5 – Bridge Welding Code.

(d) Preassembly of Field Connections: Field connections of main members of continuous beams, plate girders, bents, towers, rigid frames, trusses and arches shall be preassembled prior to erection as necessary to verify the geometry of the completed structure or unit and to verify or prepare field splices. The Contractor shall propose an appropriate method of preassembly for review and comment by the Engineer. he method and details of preassembly shall be consistent with the

erection procedures shown on the working drawings and camber diagrams. As a minimum, the preassembly procedure shall consist of assembling 3 contiguous panels accurately adjusted for line and camber. Successive assemblies shall consist of at least 1 section or panel of the previous assembly plus 2 or more sections or panels added at the advancing end. In the case of structures longer than 150 ft (45 m), each assembly shall not be less than 150 ft (45 m) long regardless of the length of individual continuous panels or section. All falsework, tools, machinery and appliances, including drift pins and bolts necessary for the expeditious handling of the work shall be provided by the Contractor at no cost to the State.

(e) Inspection: The Contractor shall furnish facilities for the inspection of material and workmanship in the shop by the Engineer. The Engineer and his representative shall be allowed free access to the necessary parts of the premises.

The Engineer will provide Quality Assurance (QA) inspection at the fabrication shop to assure that all applicable Quality Control plans and inspections are adequately adhered to and maintained by the Contractor during all phases of the fabrication. A thorough inspection of a random selection of elements at the fabrication shop may serve as the basis of this assurance.

Prior to shipment to the Project, each individual piece of structural steel shall be stamped or marked in a clear and permanent fashion by a representative of the fabricator's Quality Control (QC) Department to indicate complete final inspection by the fabricator and conformance to the Project specifications for that piece. The stamp or mark must be dated. A Materials Certificate in accordance with Article 1.06.07 may be used in lieu of individual stamps or markings, for all material in a single shipment. The Materials Certificate must list each piece within the shipment and accompany the shipment to the Project Site.

Following the final inspection by the fabricator's QC personnel, the Engineer may select pieces of structural steel for re-inspection by the Department's QA inspector. Should non-conforming pieces be identified, all similar pieces must be re-inspected by the fabricator and repair procedure(s) submitted to the Engineer for approval. Repairs will be made at the Contractor's expense.

The pieces selected for re-inspection and found to be in conformance, or adequately repaired pieces, may be stamped or marked by the QA inspector. Such markings indicate the Engineer takes no exception to the pieces being sent to the Project Site. Such marking does not indicate acceptance or approval of the material by the Engineer.

Following delivery to the Project Site, the Engineer will perform a visual inspection of all material to verify shipping documents, fabricator markings, and that there was no damage to the material or coatings during transportation and handling.

The Engineer is not responsible for approving or accepting any fabricated materials prior to final erection and assembly at the Project Site.

(f) Nondestructive Testing: All nondestructive testing of structural steel and welding shall be performed as designated in the plans and specifications. Such testing shall be performed by personnel approved by the Engineer.

Personnel performing Radiographic, Ultrasonic or Magnetic Particle testing shall be certified as a NDT Level II technician in accordance with the American Society for Non Destructive Testing (ASNT), Recommended Practice SNT-TC-1A.

Nondestructive testing shall be performed in accordance with the procedures and standards set forth in the AASHTO/AWS D1.5, Bridge Welding Code. The

Department reserves the right to perform additional testing as determined by the Engineer.

All nondestructive testing shall be witnessed by an authorized representative of the Department. Certified reports of all tests shall be submitted to the Division of Materials Testing for examination. Each certified report shall identify the structure, member, and location of weld or welds tested. Each report shall also list the length and location of any defective welds and include information on the corrective action taken and results of all retests of repaired welds.

Should the Engineer require nondestructive testing on welds not designated in the Contract, the cost of such inspection shall be borne by the Contractor if the testing indicates that any weld is defective. If the testing indicates the weld to be satisfactory, the actual cost of such inspection will be paid for by the Department.

(g) Marking: Each member shall be identified with an erection mark corresponding with the member identification mark on the approved shop drawings. Identification marks shall be impressed into the member with a low stress stamp in a location in accordance with standard industry practice.

(h) Shipping, Handling, Storage and Receiving: The Contractor shall make all arrangements necessary to properly load, transport, unload, handle and store all material. The Contractor shall furnish to the Engineer copies of all shipping statements. The weight (mass) of the individual members shall be shown on the statements. Members having a weight (mass) of more than 3 tons (2700 kg) shall have the weight (mass) marked thereon. All material shall be unloaded promptly upon delivery. The Contractor shall be responsible for any demurrage charges. Damage to any material during transportation, improper storage, faulty erection, or undocumented fabrication errors may be cause for rejection of said material at the Project Site. Top lateral bracing shall be installed in tub girders prior to shipping and erection of the field pieces. All costs associated with any corrective action will be borne by the Contractor.

4. Field Erection: A meeting shall be held on Site prior to any erection of structural steel. The Contractor shall name the person responsible for the steel erection work and provide copies of all crane operator licenses. Proposed equipment, rigging, timetable and methods shall be proposed at this meeting.

(a) Falsework: Any temporary work shall be constructed in conformance with the working drawings. The Contractor shall verify that the quality of materials and work employed are consistent with their design.

All girders shall be stabilized with falsework, temporary braces, or holding cranes until a sufficient number of adjacent girders are erected with all diaphragms and cross frames connected to provide necessary lateral support as shown in the erecting diagrams.

Adjustment shall be provided in the falsework and other temporary supports so that the temporary elevation of the structural steel provided by the falsework is consistent with the deflections that will occur as the structure is completed. The elevation of falsework shall be such as to support the girders at the cambered no-load elevation. Unloading of temporary supports shall be performed such that all temporary supports at each cross section are unloaded uniformly. Unless specifically permitted by the Engineer, welding of falsework support brackets to structural steel is not allowed.

Unless erected by the cantilever method, truss spans shall be erected on blocking. The blocking shall be left in place until the tension chord splices are fully bolted and

all other truss connections pinned and bolted and the proper geometric shape is achieved.

(b) Anchorages: Anchor bolts and similar materials which are to be placed during the erection of the structural steel shall be carefully and accurately set to the requirements of Article 6.01.03.

(c) Bearings: Bearing plates shall have a full and uniform bearing upon the substructure masonry. Bearing plates shall be placed upon bearing areas which are finished according to the requirements of Article 6.01.03.

Prefabricated pads conforming to the requirements of Article M.12.01 shall be installed unless specifically noted otherwise in the Contract plans.

Each piece shall be the same size as the bearing plate it is to support and the holes to accommodate the anchor bolts shall be clearly and accurately punched before setting the pad in place.

In placing expansion bearings, due consideration shall be given to the temperature at the time of erection and stage construction requirements. The nuts of anchor bolts at expansion bearings shall be adjusted to permit the free movement of the span.

(d) Field Assembly: Members and components shall be accurately assembled as shown on the plans and any match marks shall be followed. The material shall be carefully handled so that no components will be bent, broken or otherwise damaged.

Hammering which will injure or distort the members is not permitted. Bearing surfaces and surfaces to be in permanent contact shall be cleaned before the members are assembled.

Cylindrical erection pins shall be 1/32 in (0.8 mm) larger than the nominal diameter of the holes.

Splices and field connections of main stress carrying members shall be made with a minimum of 50% of the holes filled and tightened with high strength bolts before the lifting system is released. The bolts shall be installed uniformly throughout the connection. Lateral stability must be maintained until the deck is placed.

The Contractor shall ensure that girders are stable throughout the erection process. The stage of completeness of the bolted connections shall be considered when evaluating the strength and stability of the steel during erection. For Closed Box and Tub Girders the Contractor shall ensure that the cross-section shape of each box is maintained during erection. Top lateral bracing shall be installed in tub girders prior to shipping and erection of the field pieces.

(e) Welded Connections: Unless otherwise shown on the plans or indicated by the special provisions, welding of structural steel shall be done in accordance with "ANSI/AASHTO/AWS D1.5 Bridge Welding Code."

The Contractor's welding and inspection procedures for each type of field weld and field tacking must be submitted to the Engineer on the form designated by the Department. All procedures must be approved by the Division of Materials Testing prior to any work and must be adhered to at all times.

Quality control is the responsibility of the Contractor. The Contractor must provide an AWS Certified Welding Inspector (CWI) in accordance with AWS D1.5. The CWI must be qualified and certified in accordance with the provisions of AWS QC1, *Standard for Qualification and Certification of Welding Inspectors.*

The CWI shall make visual inspection of all welds. The Contractor shall perform magnetic particle inspection, ultrasonic testing inspection, or radiographic testing

inspection of field welds when required in the plans or special provisions. Each test may be witnessed by an authorized representative of the Engineer.

Welds or sections of welds containing imperfections determined to be unacceptable by either the CWI or the Engineer shall be removed and re-welded by the Contractor at their expense. Welds so removed and replaced shall be re-inspected by the CWI. All costs for re-inspection or testing of such welds shall be borne by the Contractor.

(f) High Strength Bolted Connections: The assembly of structural connections using ASTM A 325/ A 325M or ASTM A 490/A 490M high-strength bolts shall be installed so as to develop the minimum required bolt tension specified in Table A. The Manufacturer's certified test report, including the rotational capacity test results, **must** accompany the fastener assemblies. Fastener assemblies delivered without the certified reports will be rejected.

Bolts, nuts and washers from each rotational-capacity lot shall be shipped in the same container. If there is only one production lot number for each size of nut and washer, the nuts and washers may be shipped in separate containers. Each container shall be permanently marked with the rotational-capacity lot number such that identification will be possible at any stage prior to installation. Assemblies of bolts, nuts and washers shall be installed from the same rotational-capacity lot. Pins, small parts and packages of bolts, washers, and nuts shall be shipped in boxes, crates, kegs, or barrels. A list and description of the contained materials shall be plainly marked on the outside of each shipping container.

Bolted Parts: All material within the grip of the bolt shall be steel; there shall be no compressible material, such as gaskets or insulation, within the grip. Bolted steel shall fit solidly together after the bolts are tensioned. The length of the bolts shall be such that the end of the bolt will be flush with or outside of the face of the nut when properly installed.

Surface Conditions: At the time of assembly, all connection surfaces, including surfaces adjacent to the bolt head and nut, shall be free of scale, except tight mill scale, and shall be free of dirt or other foreign material. Burrs that would prevent solid seating of the connected parts in the snug tight condition shall be removed.

Paint is permitted on the faying surface, including slip critical connections, only when shown on the plans. The faying surfaces of slip-critical connections shall meet the requirements of the following paragraphs, as applicable:

- Connections specified to have un-coated faying surfaces: any paint, including any inadvertent over spray, shall be excluded from areas closer than 1 bolt diameter, but not less than 1.0 in (25 mm), from the edge of any hole and all areas within the bolt pattern.
- Connections specified to have painted faying surfaces shall be blast cleaned and coated in accordance with the Contract, and shall not be assembled until the coating system has been properly cured.
- Connections specified to have galvanized faying surfaces shall be hot-dip galvanized in accordance with ASTM A 123/A 123M, and shall subsequently be roughened by means of hand wire brushing. Power wire brushing is not permitted.

Installation: At the pre-erection meeting, the Contractor shall inform the Engineer of its planned method of tensioning high strength bolts. Acceptable methods are: Turn-of-Nut, Calibrated Wrench or Direct Tension Indicator.

Fastener Assemblies: A "fastener assembly" is defined as a bolt, a nut, and a washer. Only complete fastener assemblies of appropriately assigned lot numbers shall be installed.

Fastener assemblies shall be stored in an area protected from dirt and moisture. Only as many fastener assemblies as are anticipated to be installed and tensioned during a work shift shall be taken from protected storage. Fastener assemblies not used shall be returned to protected storage at the end of the shift. Prior to installation, fastener assemblies shall not be cleaned of lubricant. Fastener assemblies which accumulate rust or dirt resulting from site conditions shall be cleaned, relubricated and tested for rotational-capacity prior to installation. All galvanized nuts shall be lubricated with a lubricant containing a visible dye. Plain bolts must be oily to the touch when delivered and installed. Lubricant shall be removed prior to painting.

All bolts shall have a hardened washer under the turned element (nut or bolt head). All hardened washers shall conform to the requirements of ASTM F 436/F 436M.

Where necessary, washers may be clipped on one side to a point not closer than 7/8 of the bolt diameter from the center of the washer. Circular and beveled washers, when used adjacent to direct tension indicator washers shall not be clipped. Direct tension indicator washers shall not be clipped.

Bolt Tension Measuring Device: The Contractor shall provide a calibrated bolt tension measuring device (a Skidmore-Wilhelm calibrator (Skidmore) or other acceptable bolt tension indicating device) at all times when, and at all locations where high-strength fasteners are being installed and tensioned. The tension measuring device (Skidmore) shall be calibrated by an approved testing agency at least annually. The Skidmore shall be used to perform the rotational-capacity test of the fastener assemblies. The Skidmore will also be used to substantiate (1) the suitability of the fastener assembly to satisfy the requirements of Table A, including lubrication as required, (2) calibration of the installation wrenches, if applicable, and (3) the understanding and proper use by the Contractor of the selected method of tensioning to be used.

Complete fastener assemblies shall be installed in properly aligned holes and then tensioned by the Turn-of-Nut, Calibrated Wrench or Direct Tension Indicator method to the minimum tension specified in Table A. Tensioning may be done by turning the bolt while the nut is prevented from rotating when it is impractical to turn the nut. Impact wrenches, if used, shall be of adequate capacity and sufficiently supplied with air to perform the required tensioning of each bolt in approximately 10 seconds.

Bolts shall be installed in all holes of the connection and the connection brought to a snug condition. Snug is defined as having all the plies of the connection in firm contact. Snugging shall progress systematically from the most rigid part of the connection to the free edges. The bolts of the connection shall then be tightened in a similar manner as necessary until the connection is properly tensioned.

Nuts shall be located, whenever practical, on the side of the connection which will not be visible from the traveled way.

Unless otherwise approved by the Engineer fastener assemblies shall be brought to full tension immediately following snugging.

Fully tensioned fastener assemblies shall not be reused. Retightening previously tensioned bolts which may have been loosened by the tensioning of adjacent bolts shall not be considered as reuse.

Rotational-Capacity Tests: In addition to the certified test reports, on site Rotational-capacity tests may be required by the Engineer. This test shall be

performed by the Contractor at the location where the fasteners are installed and tensioned. When performed in the field, the procedure shall conform to the requirements of ASTM A 325/ A 325M Appendix A-1.

Turn-of-Nut Installation Method: At the start of the work, the Contractor shall demonstrate that the procedure used by the bolting crew to develop a snug condition and to control the turns from a snug condition develops the tension required in Table A. To verify their procedure, the Contractor shall test a representative sample of not less than three complete fastener assemblies of each diameter, length and grade to be used in the work. This shall be performed at the start of work using a Skidmore. Periodic retesting shall be performed when ordered by the Engineer.

After snugging the connection, the applicable amount of rotation specified in Table B shall be achieved. During the tensioning operation there shall be no rotation of the part not turned by the wrench. Tensioning shall progress systematically from the most rigid part of the connection to its free edges.

Calibrated Wrench Installation Method: Calibrated wrench method may be used only when the installation wrenches are properly calibrated daily, or as determined by the Engineer. Standard torques determined from tables or from formulas which are assumed to relate torque to tension **shall not** be acceptable.

The Contractor shall demonstrate to the Engineer periodically that all equipment and wrenches are providing a torque which has been calibrated to produce the minimum tension specified in Table A. The installation procedures shall be verified periodically, as determined by the Engineer, for each bolt diameter, length and grade using the fastener assemblies that are being installed in the work. This verification testing shall be accomplished in a Skidmore by tensioning 3 complete fastener assemblies of each diameter, length and grade from those being installed with a hardened washer under the element turned.

When significant difference is noted in the surface condition of the bolts, threads, nuts or washers, as determined by the Engineer, wrenches shall be recalibrated. The Contractor shall verify during the installation of the assembled steel work that the wrench adjustment selected by the calibration does not produce a nut or bolt head rotation from snug greater than that permitted in Table B. If manual torque wrenches are used, nuts shall be turned in the tensioning direction when torque is measured.

When calibrated wrenches are used to install and tension bolts in a connection, bolts shall be installed with hardened washers under the element turned to tension the bolts. Once the connection has been snugged, the bolts shall be tensioned using the calibrated wrench. Tensioning shall progress systematically from the most rigid part of the connection to its free edges. A calibrated torque wrench shall be used to "touch up" previously tensioned bolts which may have been relaxed as a result of the subsequent tensioning of adjacent bolts until all bolts are tensioned to the prescribed amount.

Direct Tension Indicator Installation Method: When Direct Tension Indicators (DTIs) meeting the requirements of Section M.06 are used with high-strength bolts to indicate bolt tension, they shall be subjected to the verification testing described below and installed in accordance with the method specified below. Unless otherwise approved by the Engineer, the DTIs shall be installed under the head of the bolt and the nut turned to tension the bolt. The Manufacturer's recommendations shall be followed for the proper orientation of the DTI and additional washers, if any, required for the correct use of the DTI. Installation of a

DTI under the turned element may be permitted if a washer is used to separate the turned element from the DTI.

Verification: Verification testing shall be performed in a Skidmore. A special flat insert shall be used in place of the normal bolt head holding insert. Three verification tests shall be required for each combination of fastener assembly rotational-capacity lot, DTI lot, and DTI position relative to the turned element (bolt head or nut) to be used on the Project. The fastener assembly shall be installed in the tension-measuring device with the DTI located in the same position as in the work. The element intended to be stationary (bolt or nut) shall be restrained from rotation.

The verification tests shall be conducted in 2 stages. The bolt nut and DTI assembly shall be installed in a manner so that at least 3 and preferably not more than 5 threads are located between the bearing face of the nut and the bolt head. The bolt shall be tensioned first to the load equal to that listed in Table C under Verification Tension for the grade and diameter of the bolt. If an impact wrench is used, the tension developed using the impact wrench shall be no more than 2/3 of the required tension. Subsequently, a manual wrench shall be used to attain the required tension. The number of refusals of the 0.005 in (0.125 mm) tapered feeler gage in the spaces between the protrusions shall be recorded. The number of refusals for uncoated DTIs under the stationary or turned element, or coated DTIs under the stationary element, shall not exceed the number listed under Maximum Verification Refusals in Table C for the grade and diameter of bolt used. The maximum number of verification refusals for coated DTIs (galvanized, painted, or epoxy-coated), when used under the turned element, shall be no more than the number of spaces on the DTI less 1. The DTI lot shall be rejected if the number of refusals exceeds the values in the table or, for coated DTIs if the gage is refused in all spaces.

After the number of refusals is recorded at the verification load, the bolt shall be further tensioned until the 0.005 in (0.125 mm) feeler gage is refused at all the spaces and a visible gap exists in at least 1 space. The load at this condition shall be recorded and the bolt removed from the tension-measuring device. The nut shall be able to be run down by hand for the complete thread length of the bolt excluding thread run-out. If the nut cannot be run down for this thread length, the DTI lot shall be rejected unless the load recorded is less than 95% of the average load measured in the rotational capacity test of the fastener lot as specified previously in “Rotational-Capacity Tests.”

If the bolt is too short to be tested in the calibration device, the DTI lot shall be verified on a long bolt in a calibrator to determine the number of refusals at the verification tension listed in Table C. The number of refusals shall not exceed the values listed under maximum verification refusals in Table C. Another DTI from the same lot shall then be verified with the short bolt in a convenient hole in the work. The bolt shall be tensioned until the 0.005 in (0.125 mm) feeler gage is refused in all spaces and a visible gap exists in at least 1 space. The bolt shall then be removed from the tension-measuring device and the nut shall be able to be run down by hand for the complete thread length of the bolt excluding thread run-out. The DTI lot shall be rejected if the nut cannot be run down this thread length.

Installation: Installation of fastener assemblies using DTIs shall be performed in 2 stages. The stationary element shall be held against rotation during each stage of the installation. The connection shall be first snugged with bolts installed in all

holes of the connection and tensioned sufficiently to bring all the plies of the connection into firm contact. The number of spaces in which a 0.005 in (0.125 mm) feeler gage is refused in the DTI after snugging shall not exceed those listed under Maximum Verification Refusals in Table C. If the number exceeds the values in the table, the fastener assembly shall be removed and another DTI installed and snugged.

For uncoated DTIs used under a stationary or turned element and for coated DTIs used under a stationary element, the bolts shall be further tensioned until the number of refusals of the 0.005 in. (0.125 mm) feeler gage shall be equal or greater than the number listed under Minimum Installation Refusals in Table C. If the bolt is tensioned so that no visible gap in any space remains, the bolt and DTI shall be removed and replaced by a new properly tensioned bolt and DTI.

When coated DTIs (galvanized, painted or epoxy coated) are used under a turned element, the 0.005 in (0.125 mm) feeler gage shall be refused in all spaces.

Inspection: The Contractor shall provide all the material, equipment, tools and labor necessary for the inspection of the bolted connections. Access to the bolted parts and fastener assemblies, both before and after the fasteners are installed and tensioned, shall be provided.

The Contractor is responsible for Quality Control (QC). The Contractor shall review this Specification with its project personnel prior to performing the work. The Contractor shall verify the proper markings, surface conditions and storage of fastener assemblies. The Contractor shall inspect the faying surfaces of connections for compliance with the plans and specifications. The Contractor shall provide to the Engineer a copy of their written QC Report for each shift of the calibration or verification testing specified. This Report shall confirm that the selected procedure is properly used and that the fastener assemblies installed meet the tensions specified in Table A. The Contractor shall monitor the installation of fasteners in the work to assure that the selected procedure, as demonstrated in the initial testing to provide the specified tension, is routinely and properly applied.

The Contractor, in the presence of the Engineer, shall inspect the tensioned bolts using an inspection torque wrench, as defined below. If DTI devices are used, the appropriate feeler gauge will be used. Inspection tests shall be performed within 24 hours of bolt tensioning to prevent possible loss of lubrication or corrosion influence on tensioning torque.

The inspection torque wrench shall be calibrated as follows: Three (3) bolts of the same grade, size, and condition as those under inspection shall be placed individually in a device calibrated to measure bolt tension. This calibration operation shall be done at least once each inspection day. There shall be a washer under the part turned in torqueing each bolt. In the calibrated device, each bolt shall be tightened by any convenient means to the specified tension. The inspection wrench shall then be applied to the tensioned bolt to determine the torque required to turn the nut or head 5 degrees in the tightening direction. The average of the torque required for all 3 bolts shall be defined as the job-inspection torque.

Twenty-five percent (25%), but a minimum of 2, of the tensioned bolts shall be selected by the Engineer for inspection in each connection. (The Engineer may reduce the number of bolts tested at a connection to 10% based on the Contractor's past performance and splice location.) The job-inspection torque shall then be applied to each selected assembly with the inspection torque wrench turned in the tightening direction. If all inspected bolt heads or nuts do not turn, the bolts in the connection

shall be considered to be properly tensioned. If the torque turns 1 or more bolt heads or nuts, the job-inspection torque shall then be applied to **all** bolts in the connection or to the satisfaction of the Engineer. Any bolt whose head or nut turns shall be re-tensioned and re-inspected. The Contractor may, however, re-tension all the bolts in the connection with the inspection torque wrench and resubmit it for inspection, so long as the bolts are not over-tensioned or damaged by this action.

(g) Field Corrections and Misfits: Reaming of bolt holes during erection shall be permitted only with approval of the Engineer. No excessive forces shall be applied to any member to provide for proper alignment of the bolt holes.

The correction of minor misfits involving minor amounts of reaming, cutting, grinding and chipping shall be considered a legitimate part of the erection. However, any error in the shop fabrication or deformation resulting from handling and transportation may be cause for rejection. The Contractor shall be responsible for all misfits, errors and damage and shall make the necessary corrections and replacements.

TABLE A (English)
Minimum Bolt Tension in kips*

Bolt Size (Inches)	ASTM A 325	ASTM A 490
5/8	19	24
3/4	28	35
7/8	39	49
1	51	64
1-1/8	56	80
1-1/4	71	102
1-3/8	85	121
1-1/2	103	148

*Equal to 70% of specified minimum tensile strength of bolts (as specified in ASTM Specifications for tests of full-size A 325 and A 490 bolts with UNC threads, loaded in axial tension) rounded to the nearest kip.

TABLE A (Metric)
Minimum Bolt Tension in Kilonewtons*

Bolt Size	ASTM A 325M	ASTM A 490M
M16	91	114
M20	142	179
M22	176	221
M24	205	257
M27	267	334
M30	326	408
M36	475	595

*Equal to 70% of specified minimum tensile strength of bolts (as specified in ASTM Specifications for tests of full-size A 325M and A 490M bolts with metric coarse threads series ANSI B1.13M, loaded in axial tension) rounded to the nearest kilonewton.

TABLE B (English and Metric)
Nut Rotation from the Snug Condition
Geometry[a,b,c] of Outer Faces of Bolted Parts

Bolt Length (measured from underside of head to end of bolt)	Both Faces Normal to Bolt Axis	One Face Normal to Bolt Axis and Other Face Sloped Not More Than 1:20, Bevel Washer Not Used	Both Faces Sloped Not More Than 1:20 From Normal to Bolt Axis, Bevel Washer Not Used
Up to and including 4 diameters	1/3 turn	1/2 turn	2/3 turn
Over 4 diameters but not exceeding 8 diameters	1/2 turn	2/3 turn	5/6 turn
Over 8 diameters but not exceeding 12 diameters	2/3 turn	5/6 turn	1 turn

(a) Nut rotation, as used in Table B, shall be taken as relative to the bolt, regardless of the element (nut or bolt) being turned. For bolts installed by 1/2 turn and less, the tolerance should be plus or minus 30 degrees; for bolts installed by 2/3 turn and more, the tolerance should be plus or minus 45 degrees.
To determine the nut rotation for installation and inspection of the fasteners, the nut and the end of the bolt or the head of the bolt and the adjacent steel shall be match marked.

(b) The values, given in Table B, shall be applicable only to connections in which all material within grip of the bolt is steel.

(c) No research work has been performed by the Research Council on Riveted and Bolted Structural Joints to establish the turn-of-nut procedure when bolt lengths exceed 12 diameters. For situations in which the bolt length, measured from the underside of the head to the end of the bolt, exceeds 12 diameters, the required rotation shall be determined by actual tests in a suitable tension device simulating the actual conditions.

TABLE C (English)

Bolt Dia. (in.)	Verification Tension		Maximum Verification Refusals		DTI Spaces		Minimum Installation Refusals	
	A325	A490	325	490	325	490	325	490
5/8	20	25	1	2	4	5	2	3
3/4	29	37	2	2	5	6	3	3
7/8	41	51	2	2	5	6	3	3
1	54	67	2	3	6	7	3	4
1-1/8	59	84	2	3	6	7	3	4
1-1/4	75	107	3	3	7	8	4	4
1-3/8	89	127	3	3	7	8	4	4
1-1/2	108	155	3	4	8	9	4	5

TABLE C (Metric)

Bolt Dia. (in.)	Verification Tension		Maximum Verification Refusals		DTI Spaces		Minimum Installation Refusals	
	A325	A490	Type 8.8	Type 10.9	Type 8.8	Type 10.9	Type 8.8	Type 10.9
M16	96	120	1	1	4	4	2	2
M20	149	188	2	2	5	6	3	3
M22	185	232	2	2	5	6	3	3
M24	215	270	2	2	5	6	3	3
M27	280	351	2	3	6	7	3	4
M30	342	428	3	3	7	8	4	4
M36	499	625	3	4	8	9	4	5

6.03.04—Method of Measurement: Payment under this item will be at the Contract lump sum price per each complete bridge structure or shall be based on the net weight (mass) of metal in the fabricated structure, whichever method appears on the bid proposal form.

When payment is on a lump sum basis, the work, including anchor bolts, steel bearings and plates will not be measured for payment. Bearing plates welded to the girder are included in the price of the structural steel and bearing plates bonded to the bearings are included in the price of the bearing.

When payment is based on the net weight (mass) of metal in the fabricated structure, it shall be computed as described below.

The weight (mass) of the metal works to be paid for under the item of structural steel shall be computed on the basis of the net finished dimensions of the parts as shown on the shop drawings, deducting for copes, cuts, clips and all open holes, except bolt holes, and on the following basis:

1. The weights (masses) of rolled shapes shall be computed on the basis of their nominal weights (masses) per foot (meter), as shown in the shop drawings or listed in handbooks.

The weight (mass) of plates shall be computed on the basis of the nominal weight (mass) for their width and thickness as shown on the shop drawings.

2. The weight (mass) of temporary erection bolts, shop and field paint, galvanization, boxes, crates and other containers used for shipping, and materials used for supporting members during transportation and erection, shall not be included.

3. The weight (mass) of all high strength bolts, nuts, and washers shall be included on the basis of the following weights (masses):

Weight per 100 pieces			
English units		Metric units	
Nominal diameter of H.S. bolt (inch)	**Bolthead, nut, 1 washer and stick through (lbs)**	**Nominal diameter of H.S. bolt (mm)**	**Bolthead, nut, 1 washer and stick through (kg)**
1/2	22	16	17
5/8	33	20	26
3/4	55	22	39
7/8	84	24	50
1	120	27	60
1-1/8	169	30	73
1-1/4	216	36	122

4. The weight (mass) of weld metal shall be computed on the basis of the theoretical volume from plan dimensions of the welds.

Size of fillet in Inches (mm)	**Weight of weld in pounds per foot (kg per meter)**	
3/16 (5)	0.08	(0.119)
1/4 (6)	0.14	(0.208)
5/16 (8)	0.22	(0.327)
3/8 (9.5)	0.30	(0.446)
1/2 (13)	0.55	(0.818)
5/8 (16)	0.80	(1.190)
3/4 (19)	1.10	(1.636)
7/8 (22)	1.50	(2.231)
1 (25)	2.00	(2.974)

5. The weight (mass) of steel shims, filler plates and anchor bolts shall be measured for payment.

6.03.05—Basis of Payment: The structural steel, incorporated in the completed and accepted structure, will be paid for at the Contract lump sum price for "Structural Steel (Site No.)," or at the Contract unit price per hundredweight (kilogram) for "Structural Steel," whichever is indicated in the Contract.

Payment for either method shall be for structural steel, complete in place, which price shall include quality control, furnishing, fabricating, transporting, storage and handling, erecting, welding, surface preparation and all materials including fastener assemblies, steel bearing assemblies and anchor bolts, equipment, tools and labor incidental thereto.

The cost of the raw material is included in the lump sum payment for “Structural Steel (Site No.).” All remaining work including, but not limited to, preparation of shop drawings,

fabricating, transporting, storage and handling, erecting, surface preparation and all materials, equipment, tools and labor incidental thereto, will be paid for under “Structural Steel (Site No.).”

No direct payment will be made for setting anchor bolts, preparing bearing areas, furnishing and placing materials under bearings. No direct payment will be made for non destructive testing as shown on the plans.

Pay Item	Pay Unit
Structural Steel (Site No.)	l.s. (l.s.)
Structural Steel	cwt. (kg)

CONNECTICUT
SUPPLEMENTAL SPECIFICATION
SECTION 6.12
CONCRETE CYLINDER CURING BOX

Delete the entire section and replace it with the following:

6.12.01—Description: This item shall consist of furnishing a box for curing concrete test cylinders. The box shall be commercially available and manufactured specifically for curing concrete test cylinders. The box will remain the property of the Contractor at the conclusion of the project. The box shall be delivered to a location on the Project as directed by the Engineer.

6.12.02—Materials: A catalog cut listing detailed specifications of the box and operating instructions from the manufacturer must be submitted to the Engineer. The box and its components shall be constructed of non-corroding materials and shall be capable of storing a minimum of 18 test cylinders, 6 in x 12 in (152 mm x 305 mm) stored vertically with the lid closed. The lid must be watertight when closed and hinged in the back with security latches on the front that can be padlocked. The box must be capable of holding water to a maximum level of 1 in above test cylinders placed in the box vertically. A drain hole must be provided in a wall of the box to allow manual drainage of the water that exceeds this level. A drain hole must also be provided at the bottom of the box so that it can be manually emptied. The temperature of the water must be controlled by heating and cooling device capable of maintaining the temperature of the water within a range of 60 to 80º F, +/- 2ºF (15.5 to 26.7ºC, +/- 1ºC) within an outside ambient air temperature range of -10 to 120º F (-23.3 to 49ºC). The heating and cooling device must be positioned to allow free circulation of air and water around the cylinders and be rated at 120 volts and 15 amps. A rack must be provided within the box to support the cylinders above the pool of temperature controlled water. The device must be thermostatically controlled with a digital readout that is capable of displaying the high/low water temperature within the box since the last reading was taken.

6.12.03—Construction Methods: The Contractor shall maintain the curing box in working order and shall provide all necessary electrical service and water so that the curing box can be used properly during the entire course of the project. Any curing box that is not operating properly, as determined by the Engineer, shall be replaced within 24 hours by the Contractor at no expense to the State. The Engineer reserves the right to prohibit placement of fresh concrete on the project until a curing box acceptable to the Engineer is operational on the project site.

6.12.04—Method of Measurement: The furnishing of the concrete test cylinder curing box will be measured for payment by the number of boxes delivered by the Contractor and accepted by the Engineer.

6.12.05—Basis of Payment: This item will be paid for at the Contract unit price each for “Concrete Cylinder Curing Box” ordered and accepted on the Project, which price shall include all submittals, material, tools, equipment, and labor incidental thereto. The price shall also include all maintenance and operating costs related to the curing box for the duration of the Project.

Pay Item	Pay Unit
Concrete Cylinder Curing Box	ea. (ea.)

CONNECTICUT
SUPPLEMENTAL SPECIFICATION
SECTION 6.51
CULVERTS

6.51.02—Materials:

Delete the 2nd paragraph, “Pipes of the type indicated ... of Article M.02.01.” *and insert the following paragraph:*

“ Pipes of the type indicated on the plans and joint sealant shall meet the requirements of Article M.08.01. Bedding material shall meet the requirements of Article M.08.03. Granular fill shall meet the requirements of Article M.02.01.”

6.51.03—Construction Methods:

In the 8th paragraph replace “gravel fill” *with* “granular fill.”

Delete the 13th paragraph, “Bituminous fiber and … as the pipe.”

6.51.04—Methods of Measurement:

In the 7th paragraph replace “Gravel Fill” *with* “Granular Fill.”

6.51.05—Basis of Payment:

In the 8th paragraph replace “Gravel Fill” *with* “Granular Fill.”

CONNECTICUT
SUPPLEMENTAL SPECIFICATION
SECTION 7.01
DRILLED SHAFTS

Add the following section:

SECTION 7.01
DRILLED SHAFTS

7.01.01—Description
7.01.02—Materials
7.01.03—Construction Methods
7.01.04—Method of Measurement
7.01.05—Basis of Payment

7.01.01—Description: This work shall consist of all labor, materials, equipment and services necessary to complete the Drilled Shaft installation in accordance with the Contract documents. Drilled shafts shall substantially consist of reinforced or unreinforced concrete.

7.01.02—Materials: Drilled Shafts shall be composed of the following materials:

1. **Portland Cement Concrete:** Concrete used in the construction of the shaft shall conform to the plans, Section M.03, and the following:
   (a) The concrete shall have a minimum initial slump of 8 in (200 mm).
   (b) The concrete mix shall maintain a slump of no less than 4 in (100 mm) for a minimum of 3 hours beyond the expected time for placement of concrete and removal of temporary casing (if used), as demonstrated by trial mixes and physical tests of slump loss. The trial mix and physical tests (slump loss tests) shall be conducted using concrete mix and ambient air temperatures anticipated during concrete placement.
   (c) All admixtures, if approved for use, shall be adjusted for the conditions encountered on the job so as to conform to the slump loss requirements within this specification and not to adversely affect the timing of, taking of or interpretation of any Nondestructive Testing that may be called for in the Contract.
   (d) Coarse aggregate shall conform to Article M.01.01, No. 8 Gradation.
2. **Reinforcing Steel**: Reinforcing steel used in construction of the shaft shall conform to Article M.06.01.
3. **Access Tubes:** Access tubes for cross-hole acoustic logging shall consist of Schedule 40 steel pipe conforming to ASTM A 53, Grade A or B, Type E, F, or S. The inside diameter shall be at least 1.5 in (38 mm). All access tubes shall have a round, regular inside surface free of defects and obstructions, including all pipe joints, in order to permit the free, unobstructed passage of probes to the bottoms of the tubes. The access tubes shall be watertight, free from corrosion and free of deleterious material on the outside that can prevent bonding with the concrete. All access tubes shall be fitted with watertight caps on the bottom and top.
4. **Grout:** Grout used for filling Access Tubes shall conform to the requirements of Article M.03.05. The grout shall have strength properties equivalent to or better than those of the drilled shaft concrete.
5. **Permanent Casing:** Steel casing shall meet the requirements of ASTM A36 or A252 Grade 2 unless otherwise specified on the plans. Casings shall be smooth, clean, watertight, and of ample strength to withstand both handling and installation, and the

pressure of concrete and the surrounding earth materials. The outside diameter of casing shall not be less than the specified diameter of shaft.

7.01.03—Construction Methods:

1. **Qualifications of Drilled Shaft Contractor and Submittals:** The Contractor performing the work described in this specification shall have installed drilled shafts of both diameter and length similar to those shown on the plans for a minimum of 3 years prior to the bid date for this Project. The Contractor shall submit a list of projects meeting these criteria. The list of projects shall contain names and phone numbers of owner's representatives who can verify the Contractors' participation on those projects.

   As early as possible, and no later than 30 days prior to constructing drilled shafts, the Contractor shall submit an Installation Plan for review by the Engineer. This Plan shall provide information on the following:

   (a) A list identifying the on-site supervisor(s) and drill operator(s) for approval by the Engineer. The on-site supervisor(s) shall have a minimum of 2 years' experience in supervising the construction of drilled shafts of a diameter and length similar to those shown on the plans. The drill operator(s) shall have a minimum of 1 year experience in drilling for the construction of drilled shafts of a diameter and length similar to those shown on the plans. The list shall contain a summary of each individual's experience.

   Should the Contractor elect to change personnel during construction of the shafts, the same approval process will need to be completed for the new personnel prior to working on the Project. The Contractor shall not be compensated for any delays resulting from changing of personnel.

   (b) List of proposed equipment to be used, including cranes, drills, augers, bailing buckets, final cleaning equipment, desanding equipment, slurry pumps, core sampling equipment, tremies or concrete pumps, casing and any other equipment required for construction of the shafts.

   (c) Details of overall construction operation sequence and the sequence of shaft construction in bents or groups.

   (d) Details of shaft excavation methods.

   (e) When the use of slurry is anticipated, details of the mix design and its suitability for the subsurface conditions at the Project site, mixing and storage methods, maintenance methods, and disposal procedures.

   (f) Details of methods to clean the shaft excavation.

   (g) Details of reinforcement placement, including support and centralization methods.

   (h) Details of concrete mix design and test results of both a trial mix and a slump loss test. The tests shall be conducted by an approved testing laboratory using approved methods to demonstrate that the concrete meets slump loss requirements.

   (i) Details of concrete placement, including proposed operational procedures for free fall, tremie or pumping methods, proposed concreting log form and computations for time duration of shaft pour estimates.

   (j) Details of casing installation and removal methods. If welding of casing is proposed, submit the welding procedure. All welding shall be done in accordance with the current AWS Structural Welding Code.

   (k) Details of methods for removal of obstructions. Obstructions for which the Contractor shall provide details of methods for removal include, but are not necessarily limited to, boulders, concrete, riprap, steel, timber and miscellaneous debris.

   (l) Details for any monitoring plan as called for in the Contract documents.

   The Engineer will evaluate the drilled shaft Installation Plan for conformance with the Contract documents and will then notify the Contractor of any additional information

required or changes necessary to meet the Contract requirements. All procedural approvals given by the Engineer shall be subject to trial in the field and shall not relieve the Contractor of the responsibility to satisfactorily complete the work as detailed in the plans and specifications. The Contractor shall not commence construction of the drilled shafts until the Engineer has approved the Installation Plan.

If integrity or load testing of the drilled shafts is called for, this submittal shall be developed in coordination with and submitted concurrently with working drawing submittals, as required in the testing specifications.

All submittals shall comply with the working drawing submittal requirements as outlined in Article 1.05.02.

2. **Trial Drilled Shaft Installation and Load Testing:** When called for in the contract, the Contractor shall demonstrate the adequacy of the proposed methods, techniques and equipment by successfully constructing a trial drilled shaft in accordance with these specifications. This trial drilled shaft shall be positioned away from production shafts in the location shown on the plans or as directed by the Engineer. The trial shaft shall be drilled to the maximum depth shown in the plans. Failure by the Contractor to demonstrate to the Engineer the adequacy of methods and equipment shall be reason for the Engineer to require alterations in equipment or methods by the Contractor to eliminate unsatisfactory results. Any additional trial drilled shaft required to demonstrate the adequacy of altered methods or construction equipment shall be at the Contractor's expense. Once approval has been given to construct production shafts, no changes will be permitted in the personnel, materials, methods or equipment used to construct the satisfactory trial drilled shaft without written approval of the Engineer.

   Unless otherwise shown in the Contract documents, the trial drilled shaft will have reinforcing bars, access tubes and concrete placed utilizing the same materials and methods of construction to be used during construction of the production drilled shafts. The trial drilled shaft shall be cut off 2 feet below finished grade and left in place. The disturbed area(s) at the site(s) of the trial drilled shaft(s) shall be restored as nearly as practical to original condition.

   Should the plans call for load testing of the trial drilled shaft, all necessary loading apparatus, instrumentation and other equipment required for performing the load test will be specified and paid for under a separate item.

   All trial drilled shaft(s) and load test(s) shall be completed and accepted by the Engineer prior to construction of any production drilled shafts. In the event there is more than one trial drilled shaft and load test, the Engineer may allow the Contractor to begin construction of some of the production drilled shafts.

3. **Protection of Existing Structures:** The Contractor shall control drilled shaft operations to prevent damage to existing structures and utilities, in accordance with Articles 1.07.09 and 1.07.13. Preventive measures shall include, but are not limited to: selecting construction methods and procedures to prevent caving of the shaft excavation; and monitoring and controlling the vibrations from construction activities such as the driving of casing or sheeting, drilling of the shaft, or from blasting, if permitted.

   If monitoring is called for in the Contract documents, a preconstruction survey of existing facilities shall be performed to establish baseline data, including ambient vibration levels and existing structural defects. In general, monumented survey points shall be established on structures which are located within a distance of either 10 shaft diameters or the estimated shaft depth, whichever is greater. These points shall be monitored by the Contractor for vertical and lateral movement in an approved manner to the accuracy determined by the Engineer.

   When deformations exceed the predetermined amount included in the plans, the Contractor shall immediately stop work and, if directed by the Engineer, backfill the

excavated hole. The Contractor shall be responsible for selecting and using equipment and procedures that keep deformations of existing structures within specified levels.

When vibrations are to be monitored, the Contractor will be directed to engage the services of a professional vibrations consultant to monitor and record vibration levels during drilled shaft construction. In general, vibration monitoring equipment shall be capable of detecting velocities of 0.1 in/sec (2.5 mm/sec) or less. When vibration levels exceed established tolerable levels the Contractor shall immediately stop work and take whatever measures are necessary to reduce vibration levels to below tolerable levels. All costs related to vibration monitoring required in the Contract documents shall be included in the bid price for the Drilled Shaft item.

4. **Construction Sequence:** Excavation to footing elevation shall be completed before shaft construction begins unless otherwise noted in the Contract documents or approved by the Engineer. Any disturbance at or below the footing area caused by shaft installation shall be repaired by the Contractor prior to the footing construction.

   When drilled shafts are to be installed in conjunction with embankment placement, the Contractor shall construct drilled shafts after the placement of fills, unless shown otherwise in the Contract documents or approved by the Engineer.

   Drilled shafts, constructed prior to the completion of the fills, shall not be capped until the fills have been placed as near to final grade as possible, leaving only the necessary workroom for construction of the caps.

5. **Exploration Test Borings:** As early as possible, the Contractor shall take soil samples or rock cores, where shown on the plans or as directed by the Engineer, to determine the character of the material directly below the completed shaft excavation. The soil samples shall be extracted with a split spoon sampler or undisturbed sample tube. The rock cores shall be cut with an approved triple tube core barrel to a minimum of 10 ft (3 m) below the bottom of the drilled shaft excavation before the excavation is made. The Engineer may require the depth of coring be extended up to a total depth of 20 ft (6 m). Rock core and standard penetration test samples shall be measured, visually identified and described on the Contractor's log. The samples shall be placed in suitable containers, identified by shaft location, elevation, and Project number and shall be delivered with the Contractor's field log to the Engineer within 24 hours after each boring exploration is complete. The Engineer will inspect the samples and log to determine the final depth of required excavation based on evaluation of the material's suitability. The Contractor shall not start shaft drilling or construction of the shafts until the Engineer has determined the final depth of required excavation. Two (2) copies of the Contractor's final typed log shall be furnished to the Engineer within 7 calendar days upon completion of the borings. The logs shall contain specific information about the drilling equipment and tools used and rate of hole advancement, as well as descriptions of soil, rock, obstructions, and water encountered. The Contractor shall supply a suitable, secure site for storage of all soil and rock samples on the Project site. At no time shall the soil or rock core samples be taken off the Project site without approval from the Engineer.

6. **General Methods and Equipment:** The Contractor shall perform the excavations required for shafts through whatever materials are encountered, to the dimensions and elevations shown in the plans or otherwise required by the Contract documents. The Contractor's methods and equipment shall be suitable for the intended purpose and materials encountered. The permanent casing method shall be used only at locations shown on the plans or when authorized by the Engineer in writing. Blasting shall only be permitted if specifically stated on the plans or authorized in writing by the Engineer.

7. **Uncased Construction Method:** This method consists of using water or slurry (mineral or polymer) to maintain stability of the borehole perimeter while advancing the excavation to final depth, placing the reinforcing cage, and concreting the shaft. Where drilled shafts are

located in open water areas, exterior casings shall be extended from above the anticipated high water elevation into the ground to protect the shaft concrete from water action during placement and curing of the concrete. The exterior casing shall be installed in a manner that will produce a positive seal at the bottom of the casing so that no piping of water or other materials occurs into or from the shaft excavation.

8. **Casing Construction Method:** The casing method may be used either where shown on the plans or at sites where uncased construction methods are inadequate to prevent hole caving or excessive deformation of the hole. In this method, the casing may be either placed in a predrilled hole or advanced through the ground by twisting, driving or vibration before being cleaned out.
9. **Excavation and Drilling Equipment:** The Contractor's excavation and drilling equipment shall have adequate capacity, including power, torque and down thrust to excavate a hole of the maximum diameter and to a depth of 20% beyond the depths shown on the plans.

   The excavation and overreaming tools shall be of adequate design, size and strength to perform the work shown in the plans or described herein. When the material encountered cannot be drilled using conventional earth augers with soil or rock teeth, drill buckets, grooving tools, or underreaming tools, the Contractor shall provide special drilling equipment, including but not limited to: rock core barrels, rock tools, air tools, blasting materials, and other equipment as necessary to construct the shaft excavation to the size and depth required. Approval of the Engineer is required before excavation by blasting is permitted.
10. **Excavation:** Shaft excavations shall be made at locations and to the top of shaft elevations, estimated bottom of shaft elevations, shaft geometry and dimensions shown in the Contract documents. The Contractor shall extend drilled shaft tip (base) elevations when the Engineer determines that the material encountered during excavation is unsuitable or differs from that anticipated in the design of the drilled shaft.

    The Contractor shall maintain a construction method log during shaft excavation. The log shall contain information such as: the description and approximate top and bottom elevation of each soil or rock material encountered, seepage or ground water, and remarks, including a description of the tools and drill rigs used and any changes necessitated by changing ground conditions.

    Excavated materials that are removed from shaft excavations shall be disposed of by the Contractor in accordance with the applicable specifications for disposal of excavated materials and in conformance with Section 1.10.

    The Contractor shall not permit workers to enter the shaft excavation for any reason unless both a suitable casing has been installed and the water level has been lowered and stabilized below the level to be occupied, and adequate safety equipment and procedures have been provided to workers entering the excavation. Any placement of workers within the shaft excavation shall be in conformance with OSHA regulations and industry standards.
11. **Drilled Shaft Earth Excavation:** Drilled shaft earth excavation is excavation accomplished with conventional tools such as augers and drilling buckets attached to drilling equipment of the size, power, torque, and down thrust (crowd) as proposed by the Contractor in the Installation Plan that has been approved for use by the Engineer, or successful construction of a trial drilled shaft. Earth excavation may include, but not necessarily be limited to, clay, silt, sand, gravel, cobbles, boulders, weathered rock, and miscellaneous fill.
12. **Drilled Shaft Rock Excavation:** Drilled shaft rock excavation is excavation of competent rock, accomplished with conventional rock drilling tools, such as core barrels attached to drilling equipment of the size, power, torque, and down thrust (crowd) as proposed by the Contractor in the approved Installation Plan, or successful construction of a trial drilled shaft. Top of competent rock is as defined on the Contract drawings.

13. **Obstruction:** When obstructions are encountered, the Contractor shall notify the Engineer immediately. Obstructions are defined as impenetrable objects that
    (a) cannot be removed or excavated using conventional augers fitted with soil or rock teeth, underreaming tools, or drilling buckets.
    (b) cause a significant decrease in the rate of excavation advancement, relative to the rate of advancement for the rest of the shaft excavation within the particular strata where the obstruction is located, if removed using the same techniques and equipment previously used successfully to excavate the shaft.

    The Engineer will be the sole judge of the significance of any reduced rate of shaft advancement and the classification of obstruction excavation. The Engineer will be present to evaluate the occurrence of obstructions, to authorize, and to approve the designation of such. Sloping bedrock or higher than anticipated bedrock shall not be considered obstruction excavation. Shallow obstructions are those obstructions located within 5 ft (1.5 m) of the top level of the shaft. Shallow obstructions at shaft locations shall be removed at the expense of the Contractor.

    The Contractor shall remove all subsurface obstructions at drilled shaft locations. Such obstructions may include man-made materials, such as concrete foundations, and natural materials, such as boulders. Subsurface obstruction removal special procedures/tools may include but are not limited to: chisels, boulder breakers, core barrels, down the hole hammers, air tools, hand excavation, temporary casing, and increasing the hole diameter. Blasting shall not be permitted unless specifically approved in writing by the Engineer.
14. **Lost Tools:** Drilling tools that are lost in the excavation shall not be considered obstructions and shall be promptly removed by the Contractor without compensation. All costs due to lost tool removal shall be borne by the Contractor including, but not limited to, costs associated with the repair of hole degradation due to removal operations or excessive time that the hole remains open.
15. **Casing:** Casings shall be steel, smooth, clean, watertight, and of ample strength to withstand both handling and installation and the pressure of both concrete and the surrounding earth materials. The outside diameter of casing shall not be less than the specified diameter of shaft, and the outside diameter of any excavation made below the casing shall not be less than the specified diameter of the shaft. No extra compensation will be allowed for concrete required to fill an oversized casing or oversized excavation. All casings, except permanent casings, shall be removed from shaft excavations. Any length of permanent casing installed below the shaft cutoff elevation, shall remain in place.

    When the shaft extends above ground or through a body of water, the portion exposed above ground or through the water may be formed with removable casing except when permanent casing is specified. Removable casing shall be stripped from the shaft in a manner that will not damage the concrete. Casings can be removed when the concrete has attained sufficient strength provided: curing of the concrete is continued for a 72-hour period; the shaft concrete is not exposed to salt water or moving water for 7 days; and the concrete reaches a compressive strength of at least 2500 psi (17,235 kPa) as determined from concrete cylinder breaks.
16. **Temporary Casing:** All subsurface casing shall be considered temporary unless specifically shown as permanent casing in the Contract documents. The Contractor shall be required to remove temporary casing before or immediately after completion of concreting the drilled shaft. Casing shall never be pulled after the concrete begins to set due to probable entrapment of drilling fluid in the shaft concrete and probable separation of the concrete within the shaft.

    If the Contractor elects to remove a casing and substitute a longer or larger-diameter casing through caving soils, the excavation shall either be stabilized with slurry or backfilled

before the new casing is installed. Other methods, as approved by the Engineer, may be used to control the stability of the excavation and protect the integrity of the foundation materials.

Before the casing is withdrawn, the level of fresh concrete in the casing shall be a minimum of 5 ft (1.5 m) above either the hydrostatic water level in the formation or the level of drilling fluid in the annular space behind the casing, whichever is higher. As the casing is withdrawn, care shall be exercised to maintain an adequate level of concrete within the casing so that fluid trapped behind the casing is displaced upward and discharged at the ground surface without contaminating or displacing the shaft concrete.

Temporary casings that become bound or fouled during shaft construction and cannot be practically removed shall constitute a defect in the drilled shaft. The Contractor shall be responsible to improve such defective shafts to the satisfaction of the Engineer. Improvement may consist of, but not be limited to, removing the shaft concrete and extending the shaft deeper to compensate for loss of frictional capacity in the cased zone, providing straddle shafts to compensate for capacity loss, grouting around the exterior of the shaft, or providing a replacement shaft. All corrective measures including redesign of footings caused by defective shafts shall be done to the satisfaction of the Engineer by the Contractor without either compensation or an extension of Contract time. In addition, no compensation will be paid for casing remaining in place.

17. **Permanent Casing:** Permanent casing shall be used where specified by the Contract documents. The casing shall be continuous between top and bottom elevations as shown in the plans. After installation is complete, the permanent casing shall be cut off at the prescribed elevation.

    In cases where special temporary casings are shown on the plans or authorized in writing by the Engineer to be used in conjunction with permanent casing, the Contractor shall maintain both alignment of the temporary casing with the permanent casing and a positive, watertight seal between the two casings during excavation and concreting operations.

    Permanent casing shall maintain intimate contact with the surrounding earth after installation. Use of an oversized hole or temporary casing outside the permanent casing beneath the ground surface will not be allowed without written permission of the Engineer. Should an oversized hole or temporary casing outside the permanent casing beneath the ground surface be allowed by the Engineer, grouting of the exterior annular space shall be provided by the Contractor to create intimate contact between the casing and the surrounding ground. The grouting shall extend from the bottom of the annular space to an elevation determined by the Engineer. No compensation will be paid to the Contractor for grouting of the exterior annular space.

18. **Slurry:** Mineral or polymer slurries shall be employed when slurry is used in the drilling process unless other drilling fluids are approved in writing by the Engineer. Mineral slurry shall have both a mineral grain size that will remain in suspension and sufficient viscosity and gel characteristics to transport excavated material to a suitable screening system. The percentage and specific gravity of the material used to make the mineral suspension shall be sufficient to maintain the stability of the excavation and to allow proper concrete placement.

    During construction, the level of the slurry shall be maintained at a height sufficient to prevent caving of the hole. The slurry head shall remain above the piezometric head of the groundwater. This includes initial drilling of the borehole down to the piezometric level. Slurry shall be introduced when the depth of the borehole is still above the piezometric level, not after the inflow of water can be detected and sloughing has begun. In the event of a sudden significant loss of slurry to the hole, the construction of that foundation shall be stopped until either a method to stop slurry loss or an alternate construction procedure has been approved by the Engineer.

Mineral slurry shall be premixed thoroughly with clean fresh water and adequate time (as prescribed by the mineral manufacturer) allotted for hydration prior to introduction into the shaft excavation. Slurry tanks of adequate capacity shall be required for slurry circulation, storage, and treatment. No excavated slurry pits will be allowed in lieu of slurry tanks without the written permission of the Engineer. Desanding equipment shall be provided by the Contractor as necessary to control slurry sand content to less than 4% by volume at any point in the borehole at the time the slurry is introduced, including situations in which temporary casing will be used. The Contractor shall take all steps necessary to prevent the slurry from "setting up" in the shaft. Such methods may include but are not limited to: agitation, circulation and adjusting the properties of the slurry. Disposal of all slurry shall be done off site in suitable areas by the Contractor. Disposal of the slurry shall also be in conformance with Section 1.10.

Control tests using suitable apparatus shall be carried out on the mineral slurry by the Contractor to determine density, viscosity and pH. An acceptable range of values for mineral slurry physical properties is shown in Table 7.01-1:

TABLE 7.01-1, MINERAL SLURRY PROPERTIES
(Sodium Bentonite or Attapulgite in Fresh Water)

	Acceptable Range of Values		
Property	**At Time of Slurry Introduction**	**In Hole at Time of Concreting**	**Test Method**
Density - pcf (kN/m^2)	64.3* - 69.1* (10.1* - 10.8*)	64.3* - 75.0* (10.1* - 11.8*)	Density Balance
Viscosity - sec./quart (sec./liter)	28 – 45 (26 – 43)	28 – 45 (26 – 43)	Marsh Funnel
pH	8 - 11	8 - 11	pH paper, pH meter

* Increase by 2 pcf (0.3 kN/m^2) in salt water

Notes:
(a) Tests shall be performed when the slurry temperature is above 40° F (4.5° C).
(b) If desanding is required, sand content shall not exceed 4% (by volume) at any point in the borehole as determined by the American Petroleum Institute sand content test when the slurry is introduced.

Tests to determine density, viscosity and pH value shall be performed during the shaft excavation to establish a consistent working pattern. A minimum of 4 sets of tests shall be made during the first 8 hours of slurry use. When the results show consistent behavior, the testing frequency may be decreased to 1 set every 4 hours of slurry use.

If the Contractor proposes to use polymer slurry, either natural or synthetic, the product is subject to approval by the Engineer. Slurry properties at the time of mixing and at the time of concreting must be in conformance with the written recommendations of the manufacturer. However, whatever product is used, the sand content at the base of the drilled shaft excavation shall not exceed 1% when measured by Method API 13B-1, Section 5, immediately prior to concreting.

If the Contractor proposes to use blended mineral-polymer slurry, the Contractor shall submit a detailed report specific to the Project prepared and signed by a qualified slurry consultant describing the slurry materials, the mix proportions, mixing methods and quality control methods.

If polymer slurry, or blended mineral-polymer slurry, is proposed, the Contractor’s slurry

management plan shall include detailed provisions for controlling the quality of the slurry, including tests to be performed, the frequency of those tests, the test methods, and the maximum /minimum property requirements that must be met to ensure that the slurry meets its intended functions in the subsurface conditions at the Project site and with the construction methods that are to be used. The slurry management plan shall include a set of the slurry manufacturer's written recommendations and shall include the following tests, as a minimum: Density test (API 13B-1, Section 1), viscosity test (Marsh funnel and cup, API 13B-1, Section 2.2, or approved viscometer), pH test (pH meter, pH paper), and sand content test (API sand content kit, API 13B-1, Section 5).

If approved by the Engineer, the Contractor may use water as a drilling fluid. In that case, all of the provisions in Table 7.01-1 for mineral slurries shall be met, except that the maximum density shall not exceed 70 pcf (11 kN/m^2).

The Contractor shall ensure that a heavily contaminated slurry suspension, which could impair the free flow of concrete, has not accumulated in the bottom of the shaft. Prior to placing concrete in any shaft excavation, the Contractor shall take slurry samples using a sampling tool approved by the Engineer. Slurry samples shall be extracted from the base of the shaft and at intervals not exceeding 10 ft (3 m) up the slurry column in the shaft, until two consecutive samples produce acceptable values for density, viscosity, and pH.

When any slurry samples are found to be unacceptable, the Contractor shall take whatever action is necessary to bring the slurry within specification requirements. Concrete shall not be placed until the slurry in the hole is re-sampled and test results produce acceptable values.

Reports of all tests specified above, signed by an authorized representative of the Contractor, shall be furnished to the Engineer on completion of each drilled shaft.

During construction, the level of mineral or blended mineral-polymer slurry in the shaft excavation shall be maintained at a level not less than 4 ft (1.2 m) above the highest expected piezometric pressure head along the depth of the shaft, and the level of polymer slurry shall be maintained at a level not less than 6 ft (1.8 m) above the highest expected piezometric pressure head along the shaft. If at any time, in the opinion of the Engineer, the slurry construction method fails to produce the desired final results, the Contractor shall discontinue this method and propose an alternate method for approval by the Engineer.

Drilling tools shall contain vents to stabilize hydrostatic pressure above and below the tool during insertion and extraction. The rate of tool extraction shall not cause any noticeable turbulence in the slurry column in the borehole.

The Contractor shall arrange for the slurry manufacturer's technical representative to be present at the site during Project startup, or throughout the entire Project if continual difficulty is expected, to ensure that the slurry is mixed and managed properly.

19. **Excavation Inspection:** The Contractor shall check the dimensions and alignment of each shaft excavation. Final shaft depths shall be measured with a suitable weighted tape or other approved method after final cleaning. The Contractor shall provide equipment and access to the Engineer for confirming dimension, alignment, and bottom cleanliness. Required shaft cleanliness will be determined by the Engineer.

20. **Construction Tolerances:** The following construction tolerances apply to drilled shafts unless otherwise stated in the Contract documents:
    - **(a)** The center of the drilled shaft shall be within 3 in (76 mm) of plan position in the horizontal plane at the plan elevation for the top of the shaft.
    - **(b)** The vertical alignment of a vertical shaft excavation shall not vary from the plan alignment by more than 1/4 in/ft (21 mm/m) of depth.
    - **(c)** After the concrete is placed, the top of the reinforcing steel cage shall be no more than 6 in (150 mm) above and no more than 3 in (76 mm) below plan position.

(d) The top elevation of the shaft shall have a tolerance of plus 1 in (25 mm) or minus 3 in (76 mm) from the plan top-of-shaft elevation.

(e) Excavation equipment and methods shall be designed so that the completed shaft excavation will have a planar bottom. The cutting edges of excavation equipment shall be normal to the vertical axis of the equipment within a tolerance of +/- 3/8 in/ft (+/- 3 mm/m) of diameter.

Drilled shaft excavations and completed shafts not constructed within the required tolerances are unacceptable. The Contractor shall be responsible for correcting all unacceptable shaft excavations and completed shafts to the satisfaction of the Engineer. Materials and work necessary, including engineering analysis and redesign, to complete corrections for out-of-tolerance drilled shaft excavations, shall be furnished without cost to the State or extension of Contract time.

21. Reinforcing Steel Cage Construction and Placement: The reinforcing steel cage, consisting of longitudinal bars, ties, cage stiffener bars, spacers, centralizers, and other necessary appurtenances, shall be completely assembled and placed as a unit immediately after the shaft excavation is inspected and accepted, and prior to concrete placement. Internal stiffeners shall be removed as the cage is placed in the borehole so as not to interfere with the placement of concrete.

The reinforcing steel in the shaft shall be tied and supported so that the reinforcing steel will remain within allowable tolerances. Concrete spacers or other approved noncorrosive spacing devices shall be used at sufficient intervals near the bottom and at intervals not exceeding 10 ft (3 m) up the shaft to ensure concentric spacing for the entire cage length. Spacers shall be constructed of approved material equal in quality and durability to the concrete specified for the shaft. The spacers shall be of adequate dimension to ensure a minimum 3 in (76 mm) annular space between the outside of the reinforcing cage and the side of the excavated hole. Approved cylindrical concrete feet (bottom supports) shall be provided to ensure that the bottom of the cage is maintained the proper distance above the base.

The elevation of the top of the steel cage shall be checked before and after the concrete is placed. If the upward displacement of the rebar cage exceeds 2 in (51 mm) or if the downward displacement exceeds 6 in per 20 ft (152 mm per 6 meters) of shaft length, the drilled shaft will be considered defective. Corrections shall be made by the Contractor to the satisfaction of the Engineer. No additional shafts shall be constructed until the Contractor has modified the rebar cage support in a manner satisfactory to the Engineer.

22. Concrete Placement: Concrete placement shall be performed in accordance with the applicable portions of Section 6.01 and with the requirements herein.

Concrete shall be placed as soon as possible after reinforcing steel placement and after the Engineer has accepted the cleanliness of the shaft. The Engineer may re-inspect the shaft for cleanliness should there be any delays between initial acceptance of shaft cleanliness and commencement of the concrete placement. If during the delay the Engineer has determined that shaft cleanliness has deteriorated, the Engineer may require the Contractor to re-clean the shaft. The Contractor may be required to remove the rebar cage, should it be necessary to achieve the required shaft cleanliness. The Contractor will not be compensated for any cost or loss of time due to the need to re-clean the shaft.

Concrete placement shall be continuous from the bottom to the top elevation of the shaft. Concrete placement shall continue after the shaft excavation is filled and good quality concrete is evident at the top of shaft. Concrete shall be placed by free fall, or through a tremie or concrete pump. The free fall placement will only be permitted in dry holes. Concrete placed by free fall shall fall directly to the base without contacting the rebar cage or hole sidewall. Drop chutes may be used to direct concrete to the base during free fall placement.

The Contractor shall maintain Concreting Logs during all concrete placement. The log shall include, but not be limited to, concreting curves that shall plot Depth to Top of Concrete vs. Volume of Concrete Placed (for both theoretical and actual volumes of concrete placed). The Contractor shall provide a copy of each log to the Engineer upon completion of each drilled shaft concrete placement. A sample of the proposed log to be used by the Contractor shall be submitted as part of the Installation Plan working drawing submittal.

23. **Tremies:** Tremies may be used for concrete placement in either wet or dry holes. Tremies used to place concrete shall consist of a tube of sufficient length, weight, and diameter to discharge concrete at the shaft base elevation. The tremie shall not contain aluminum parts that may come in contact with the concrete. The tremie inside diameter shall be at least 6 times the maximum size of aggregate used in the concrete mix, but shall not be less than 10 in (254 mm). The inside and outside surfaces of the tremie shall be clean and smooth to permit flow of concrete and unimpeded withdrawal during concreting. The wall thickness of the tremie shall be adequate to prevent crimping or sharp bends, which may restrict concrete placement.

    The tremie used for wet excavation concrete placement shall be watertight. Underwater or under-slurry placement shall not begin until the tremie is placed to the shaft base elevation, and the concrete shall be kept completely separated from the water or slurry prior to the time it is discharged. Valves, bottom plates or plugs may be used for this purpose only if concrete discharge can begin within 1 tremie diameter of the base of the drilled shaft. Plugs shall either be removed from the excavation or be of a material, approved by the Engineer, which will not cause a defect in the shaft if not removed. The discharge end of the tremie shall be constructed to permit the free radial flow of concrete during placement operations. The tremie discharge end shall be immersed at least 5 ft (1.5 m) in concrete at all times after starting the flow of concrete. The flow of the concrete shall be continuous. The level of the concrete in the tremie shall be maintained above the level of slurry or water in the borehole at all times to prevent water or slurry intrusion into the shaft concrete.

    If at any time during the concrete placement, the tremie line orifice is removed from the fluid concrete column and discharges concrete above the rising concrete level, the shaft will be considered defective. All costs of repair or replacement of defective shafts shall be the responsibility of the Contractor.

24. **Pumped Concrete:** Concrete pumps and lines may be used for concrete placement in either wet or dry excavations. All pump lines shall have a minimum 4 in (102 mm) diameter and be constructed with watertight joints. Concrete placement shall not begin until the pump line discharge orifice is at the shaft base elevation.

    For wet excavations, a plug or similar device shall be used to separate the concrete from the fluid in the hole until pumping begins. The plug shall either be removed from the excavation or be of a material, approved by the Engineer, that will not cause a defect in the shaft if not removed.

    The discharge orifice shall remain at least 5 ft (1.5 m) below the surface of the fluid concrete. When lifting the pump line during concreting, the Contractor shall temporarily reduce the line pressure until the orifice has been repositioned at a higher level in the excavation.

    If at any time during the concrete placement the pump line orifice is removed from the fluid concrete column and discharges concrete above the rising concrete level, the shaft will be considered defective. All costs of repair or replacement of defective shafts shall be the responsibility of the Contractor.

25. **Drop Chutes:** Drop chutes may be used to direct placement of free-fall concrete in excavations where the maximum depth of water does not exceed 3 in (76 mm). Free fall placement is not permitted in wet excavations. Drop chutes shall consist of a smooth tube

of either 1 piece construction or sections that can be added and removed. A drop chute can also be a hopper with a short tube to direct the flow of concrete. Concrete may be placed through either the hopper at the top of the tube or side openings as the drop chute is retrieved during concrete placement. If concrete placement causes the shaft excavation to cave or slough, or if the concrete strikes the rebar cage or sidewall, the Contractor shall reduce the height of free fall or reduce the rate of concrete flow into the excavation, or both. If caving or sloughing of the borehole walls occurs during free-fall placement of concrete, the shaft will be considered defective. All costs of repair or replacement of defective shafts shall be the responsibility of the Contractor. If concrete placement cannot be satisfactorily accomplished by free fall, in the opinion of the Engineer, the Contractor shall use either tremie or pumping techniques to accomplish the concrete placement.

26. **Access Tubes for Cross-Hole Acoustic Logging:** Access tubes for cross-hole acoustic logging shall be placed on each reinforcing cage designated in the Contract documents in the position and at the frequency shown on the plans. Access tubes must be firmly secured to the cage. Normally, the tubes shall extend from 6 in (150 mm) above the bottom of the shaft to at least 3 ft (0.9 m) above the top of the shaft, or 2 ft (0.6 m) above the ground surface if the shaft is cut off below the ground surface. If cross-hole acoustic tests are to be performed, the access tubes shall be filled with clean water no later than 4 hours after placement of the concrete and the tubes capped during concrete placement to keep out concrete and debris. In all cases, the access tubes shall be as nearly parallel as possible and be placed as far from the longitudinal steel bars as possible.

    Prior to the beginning of downhole logging, the Contractor shall assure that the Cross-Hole Acoustic Logging test probes can pass through every tube to the bottom. If a tube is obstructed, the entire length of the obstructed access tube will not be measured for payment. The Engineer may also require the Contractor to core a hole within the drilled shaft near and to the full depth of the obstructed tube. The cored hole shall be large enough to accommodate the test probe for the full length of the hole. The coring equipment, coring procedure and location of the core hole shall be approved by the Engineer prior to beginning the coring process. The coring method shall provide for complete core recovery and shall minimize abrasion and erosion of the core. The core hole shall be placed at a position in the shaft that will not produce damage to the reinforcing steel in the shaft. The core hole shall be logged, voids or defects indicated on the log and the log submitted to the Engineer. Cores shall be preserved and made available for inspection by the Engineer. The core hole will be treated as an access tube for downhole testing. Core holes that are drilled for the purpose of providing a substitution for a blocked access tube shall be measured and paid for at the Contract unit price for Access Tubes.

    Upon completion of all tests involving access tubes and after acceptance of the drilled shaft, the access tubes and core holes shall be filled with grout.

27. **Evaluation and Acceptance/Rejection of Drilled Shafts:** Upon completion and integrity testing (if called for) of a drilled shaft, the Engineer will review all available drilling logs, drilled shaft construction logs, concreting logs, inspection reports, load test results, and integrity test results to determine the acceptability of the drilled shaft. If the Engineer determines that available data is inconclusive, the Engineer may call for additional integrity testing, coring, or other appropriate actions necessary for evaluating the acceptability of the drilled shaft. Should the additional integrity testing or coring confirm the presence of anomalies, the Contractor will not be compensated for the cost of the additional integrity testing or coring (even if the anomalies are determined to be non-critical and the shaft is found to be acceptable). Should additional integrity testing or coring demonstrate that anomalies are not present (prior to any remedial work), the additional integrity testing or coring will be paid for by the Department. The Contractor may continue to construct drilled shafts before receipt of notice of acceptance of the tested shaft or shafts by the Engineer. If

the Engineer finds previously constructed shaft(s) to be unacceptable, the Contractor shall be required to repair, at the Contractor's expense, the unacceptable shaft(s) to the satisfaction of the Engineer. The Contractor shall prove to the satisfaction of the Engineer, at no expense to the State, the acceptability of all shafts constructed since the time that the unacceptable shaft was constructed and the acceptability of the procedure to construct future shafts. If the Engineer deems the construction procedure to be unacceptable, the Contractor shall cease all drilled shaft construction until a new construction procedure is submitted by the Contractor and accepted by the Engineer.

The Contractor shall submit repair procedures to the Engineer for review and approval. If these plans involve change or impact to the structural design of the shafts or shaft caps, or to the geometry of the shafts, any proposed redesign of the Contractor's plan shall be performed at the Contractor's expense by a qualified Professional Engineer registered in the State of Connecticut.

The Engineer may require that additional shafts be tested. If the testing of the additional shaft(s) indicates the presence of a defect in any additional shaft, the testing cost for that shaft shall be borne by the Contractor and the Contractor shall repair the shaft at the Contractor's expense, as above. Any additional testing required by the Engineer on repaired drilled shafts shall be considered part of the Contractors remediation plan and its cost shall be borne by the Contractor.

7.01.04—Method of Measurement:

1. **Furnishing Drilled Shaft Drilling Equipment**: There will be no measurement of the work performed under this Lump Sum item.
2. **Drilled Shaft** will be measured for payment by the length in linear feet (meter) of the completed and accepted concrete drilled shaft, of the diameter and containing the reinforcement shown on the plans. The length will be determined as the difference between the plan top of shaft elevation and the final bottom of shaft elevation.
3. **Drilled Shaft Earth Excavation** will be measured for payment by the length in linear feet (meter) of completed earth excavation of the diameter shown on the plans (measured along the centerline of the shaft), either from the top of existing grade elevation prior to drilling or from the bottom of the drilled shaft cap elevation (whichever is lower), to either the top of competent rock elevation (if the drilled shaft extends onto or into competent rock) or to the bottom of the shaft elevation (if the shaft does not extend onto or into competent rock).
4. **Drilled Shaft Rock Excavation** will be measured for payment by the length in linear feet (meter) of completed rock excavation of the diameter shown on the plans, measured along the centerline of the shaft from the top of competent rock elevation to the bottom of the shaft elevation
5. **Obstructions** will be measured for payment, after designation as an obstruction by the Engineer, by the number of hours of work, or fraction thereof per obstruction, required to remove the obstruction.
6. **Trial Drilled Shaft** will be measured for payment by the authorized linear feet (meter) of trial shaft holes drilled to the diameter shown on the plans, completed (including backfill and restoration of area, when required) and accepted. The length of trial shaft holes will be determined as the difference between the existing ground surface elevation at the center of the trial shaft hole prior to drilling and the authorized bottom elevation of the hole.
7. **Exploration Test Borings** will be measured for payment by the length in linear feet (meter), measured from the existing grade elevation to the bottom elevation of the exploration hole, for each authorized exploration boring drilled.
8. **Permanent Casing** will be measured for payment by the length in linear feet (meter) of each diameter casing installed and accepted. The length to be paid will be measured along

the casing from the top of the shaft elevation or the top of casing, whichever is lower, to the bottom of the casing at each shaft location where permanent casing is used.

9. **Access Tubes** will be measured for payment by the length in linear feet (meter) of unobstructed access tube, installed and accepted in the drilled shafts, to the depths shown on the plans

7.01.05—Basis of Payment:

1. **Furnishing Drilled Shaft Drilling Equipment:** Payment for this item will be at the Contract lump sum price for "Furnishing Drilled Shaft Drilling Equipment" which will be considered full and complete payment for furnishing and moving the drilling equipment to the Project site, setting up the equipment at the required locations, and removing the equipment from the Project site.

   Payment of 60% of the lump sum amount bid for this item will be made when all drilling equipment is on the Project site, assembled and ready to drill foundation shafts. Payment of the remaining 40% of the lump sum amount will be made when all shafts have been drilled, all shaft concrete has been placed to the top of the shaft, all defects are repaired, and all drilled shafts have been accepted by the State.
2. **Drilled Shaft:** Drilled shafts will be paid for at the Contract unit price per linear foot (meter) for "Drilled Shaft (Diameter)" complete and accepted in place, including submittals, concrete and reinforcing steel, all labor, materials, equipment, temporary casings, slurry, slurry technical representative, blasting (if allowed), protection of existing facilities/utilities, vibration monitoring and incidentals necessary to complete the drilled shaft.
3. **Drilled Shaft Earth Excavation:** This work will be paid for at the Contract unit price per linear foot (meter) for "Drilled Shaft Earth Excavation (Diameter)" complete, including all labor, equipment, materials, water control, and disposal of excavated material necessary.
4. **Drilled Shaft Rock Excavation:** Drilled shaft rock excavation will be paid for at the Contract unit price per linear foot (meter) for "Drilled Shaft Rock Excavation (Diameter)" complete, including all labor, equipment, materials, water control, and disposal of excavated material necessary. No payment will be made for additional rock excavation or placement of additional shaft concrete resulting from blasting overbreak (if blasting is allowed).
5. **Obstructions:** Removal of obstructions will be paid for at the Contract unit price per hour for "Obstructions" complete, including all labor, equipment, materials, excavation of obstructions, water control, and disposal of excavated material necessary. If the Contractor chooses to use a larger shaft diameter for obstruction excavation, no additional compensation will be provided to perform this oversized obstruction excavation.
6. **Trial Drilled Shaft:** Trial drilled shafts will be paid for at the Contract unit price per linear foot (meter) for "Trial Drilled Shaft (Diameter)" complete and accepted, including all labor, equipment, materials, excavation of the trial drilled shaft through whatever materials are encountered to the bottom of shaft elevation shown on the plans or as authorized by the Engineer (using slurry approved by the Engineer as necessary), providing inspection facilities, backfilling the hole, restoring the site as required and all other expenses to complete the trial shaft.
7. **Exploration Test Borings:** Soil samples, rock cores or both, of the diameter and length required and authorized by the Engineer will be paid for at the Contract unit price per linear foot (meter) for "Exploration Test Boring" complete, including drilling, extracting, packaging and classifying samples or cores, delivery of same to the Engineer, furnishing concrete or grout to fill the core hole, providing a written log of the hole and all other expenses necessary.
8. **Permanent Casing:** Permanent casings will be paid for at the Contract price per linear foot (meter) for "Permanent Casing (Diameter)" complete, including furnishing and placing the

permanent casing in the shaft excavation.

9. **Access Tubes:** Access tubes will be paid for at the Contract unit price per linear foot (meter) of unobstructed “Access Tubes” complete and accepted, installed in the drilled shafts to the depths shown on the plans, including the post-test grouting of the access tubes.

Pay Item	Pay Unit
Furnishing Drilled Shaft Drilling Equipment	l.s. (l.s.)
Drilled Shaft (Diameter)	l.f. (m)
Drilled Shaft Earth Excavation (Diameter)	l.f. (m)
Drilled Shaft Rock Excavation (Diameter)	l.f. (m)
Obstructions	hr. (hr.)
Trial Drilled Shaft (Diameter)	l.f. (m)
Exploration Test Boring	l.f. (m)
Permanent Casing (Diameter)	l.f. (m)
Access Tubes	l.f. (m)

CONNECTICUT
SUPPLEMENTAL SPECIFICATION
SECTION 7.02
PILES

Delete the entire section and replace it with the following:

SECTION 7.02
PILES

7.02.01—Description
7.02.02—Materials
7.02.03—Construction Methods
7.02.04—Method of Measurement
7.02.05—Basis of Payment

7.02.01—Description: This item shall consist of furnishing and driving foundation piles of the type and dimensions designated. Piles shall conform to and be installed in accordance with these specifications, and at the location, and to the elevation, penetration and/or capacity shown on the plans, or as directed by the Engineer. If specified in the plans or directed by the Engineer, piles shall be tipped, shaped, reinforced or otherwise pointed and strengthened.

Test piles shall be piles of the type specified, driven in advance of placing orders for the piles, for the purpose of determining length or bearing capacity of piles. The Contractor shall furnish the piles in accordance with an itemized order list which will be furnished by the Engineer, showing the number and length of all piles. When test piles are specified, the pile lengths shown on the plans are for estimating purposes only. The actual lengths to be furnished for production piles will be determined by the Engineer after the test piles have been driven.

7.02.02—Materials: Piles of the type indicated on the plans shall meet the requirements of Articles M.09.02 and M.14.01.

7.02.03—Construction Methods:

1. Pile Types:

(a) Timber Piles: The method of storing and handling timber piles shall be such as to avoid damage to the piles. Special care shall be taken to avoid breaking the surface of treated piles. Cant dogs, hooks, or pike-poles shall not be used. Cuts or breaks in the surface of treated piling shall be given 3 brush coats of hot creosote oil of approved quality, and hot creosote oil shall be poured into all bolt holes.

(**b) Steel Piles:** The methods of storing and handling steel piles shall be such as to prevent damage to the piles and to protect them from corrosion.

(c) Cast-In-Place Concrete Piles: Cast-in-place concrete piles shall be constructed by driving steel shells and filling them with concrete. Shells shall be continuously or incrementally tapered, or cylindrical, or a combination of continuously or incrementally tapered lower sections, which are extended with cylindrical upper sections, unless otherwise provided in the plans or special provisions. The tapered portion of piles shall have a minimum tip diameter of 8 in (200 mm) and shall change in diameter not less than 1 in per every 12 ft (7 mm/m). Cylindrical piles and the cylindrical extension portions of tapered piles shall have a minimum diameter of 12 in (300 mm). Shells for cast-in-place concrete piles shall be formed by joining sections of the same manufacture, unless otherwise permitted by the Engineer. Composite shell piles, which

are piles composed of different thicknesses or of different manufacture, shall not be used unless shown on the plans or approved by the Engineer. Prefabricated driving points or other type tip enclosures shall be subject to the approval of the Engineer.

The Contractor shall furnish shells of a type and gage which can be driven without distortion. Shells which fail, fracture or otherwise distort during driving or after driving shall be withdrawn or replaced at the Contractor's expense. The metal of shells which are to be driven without a mandrel shall be of sufficient thickness to withstand the driving without failure, fracture or distortion, but in no case shall the thickness be less than No. 7 gage. Shells driven with a mandrel shall have a thickness not less than No. 18 gage. Piles having a shell thickness less than No. 9 gage shall be reinforced as shown on the plans.

Composite shell piles formed by extending lower sections of No. 7 or heavier gage, with upper sections of lighter than No. 7 gage, shall be driven with an internal mandrel in such a manner so as to insure shell alignment and maximum hammer energy transmission throughout the pile shell length. All details concerning compatibility of shell and mandrel construction shall be subject to the approval of the Engineer.

After driving has been completed, the shell shall be inspected and approved before any concrete is placed. The Contractor shall provide suitable lights and other equipment necessary to inspect each shell throughout its length.

All seams, joints and splices in shells shall develop the full strength of the shell and shall be watertight. Damaged shells that are unacceptable to the Engineer shall be filled with sand and a replacement shell or shells shall be driven adjacent thereto.

Reinforcement shall be placed in accordance with the requirements of the plans or special provisions.

No concrete shall be placed in a pile until all driving within a radius of 15 ft (4.5 m) from the pile has been completed, or until all the shells for any one bent have been completely driven. If this is not practical, all driving within the above limits shall be discontinued until the concrete in the last pile cast has set at least 7 days.

Concrete shall be placed continuously in each pile, care being used to fill every part of the shell, and to work concrete around the reinforcement without displacing it. Concrete shall not be placed in shells containing an accumulation of water or any foreign material.

Extensions, or "build-ups" on concrete piles, shall be avoided; but when necessary, they shall be made as specified in Subarticle 7.02.03-7.

(d) Prestressed Concrete Piles (Pretensioned): The piles shall be manufactured in accordance with the provision of Article 5.14.03, except as follows:

(1) Forms: The forms for the piles shall be of substantial construction and shall produce a uniformly smooth surface on all formed sides. A minimum concrete cover of 2 in (50 mm) shall be maintained for prestressing elements by the use of spreaders or by bundling in areas adjacent to openings or inserts. Ties shall also have a minimum cover of 2 in (50 mm) at these locations. Side forms carrying no load may be removed after 24 hours with the permission of the Engineer or after the concrete has reached the minimum transfer strength as required by Subarticle M.09.02-6.

(2) Finishing: The topside surface of the piles shall be given a uniformly smooth steel trowel finish to match the surface of the formed sides. The prestressing elements shall be cut flush or recessed 1/8 in (3 mm) to the top of the pile. Projecting fins and surface imperfections shall be removed in a workmanlike manner. Exposed jet pipe connections, inserts or other devices shall be removed or recessed to a depth as directed, and the hole or opening patched with non-shrink grout in a workmanlike manner. The patching material shall have a degree of finish comparable to the adjacent surfaces.

Additional finishing of piles, if required, shall be as shown on the plans or as otherwise directed.

(3) Handling and Storage: Care shall be taken during storage, transporting, hoisting and handling of the prestressed piles to prevent cracking or damage. Damaged piles shall be replaced by the Contractor at its expense. Lifting and support points shall be marked on the piles as required.

(4) Pile Extensions: Pile extensions shall normally be fabricated for this purpose in accordance with the specifications. However, sound sections of pile cutoffs or sound portions of rejected piles may be used, subject to the approval of the Engineer. Short pile extensions may, with the permission of the Engineer, be cast-in-place monolithically with the footing or cap.

2. Pile Driving Equipment:

(a) Hammers: Piles shall be driven with approved air, steam, diesel, or hydraulic hammers or a combination of acceptable hammer and water jet. The plant and equipment furnished for air/steam hammers shall have sufficient capacity to maintain at the hammer, under working conditions, the volume and pressure specified by the manufacturer. The plant and equipment shall be equipped with accurate pressure gauges which are easily accessible to the Engineer. The valve mechanism and other parts of the hammer shall be properly maintained so that the length of stroke for a single-acting hammer and the number of blows per minute for a double-acting hammer will be obtained. The power plant for hydraulic hammers shall have sufficient capacity to maintain at the hammer, under working conditions, the volume and pressure specified by the manufacturer. The power plant and equipment shall be equipped with accurate pressure gauges which are easily accessible to the Engineer.

The size of hammer shall be adapted to the type and size of piles and the driving conditions. Unless otherwise specified, the minimum rated striking energy per blow for hammers used shall be 7,000 ft lb (9,500 J) for driving timber piles; 15,000 ft lb (20,000 J) for driving steel piles and for driving shells for cast-in-place concrete piles; and 19,000 ft lb (25,000 J) for driving precast concrete piles and for driving prestressed concrete piles. The hammer model used for the driving of test piles shall be used for the driving of service or production piles, unless a change is authorized by the Engineer in writing. Hammers delivering an energy which the Engineer considers detrimental to the piles shall not be used.

Non-impact hammers, such as vibratory hammers, or driving aids such as jets, followers, pre-augered and prebored holes shall not be used unless either specifically permitted in writing by the Engineer or stated in the Contract.

(b) Pile Hammer Approval: All pile driving equipment furnished by the Contractor shall be subject to the approval of the Engineer. All pile driving equipment shall be sized in such a way that the piles can be driven with reasonable effort to the ordered lengths without damage. Approval of pile driving equipment by the Engineer will be based on wave equation analysis and/or other judgments. In no case shall the driving equipment be used without written approval of the Engineer. Prerequisite to such approval, the Contractor shall submit to the Engineer the necessary pile driving equipment information and wave equation analysis at least 30 days prior to driving piles. The wave equation analysis shall be signed, sealed and dated by a Connecticut licensed Professional Engineer.

The criteria that the Engineer will use to evaluate the driving equipment consists of both the required number of hammer blows per foot (per 0.25 meters) as well as the pile stresses at the required ultimate pile capacity. The required number of hammer blows indicated by the wave equation at the ultimate pile capacity shall be between 36 and 180 blows per foot (29 and 147 blows per 0.25 meters) for the driving equipment to be acceptable. In addition, for the driving equipment to be acceptable the pile stresses which are indicated by the wave equation to be generated by the driving equipment

shall not exceed the maximum driving stresses allowed by the governing design code stated in the Contract.

During pile driving operations, the Contractor shall use the approved system. Variations in the driving system will not be permitted without the Engineer's written approval. Any change in the driving system will only be considered after the Contractor has submitted the necessary information for a revised wave equation analysis.

If the Engineer determines the Contractor's hammer is unable to transfer sufficient energy to the pile, the hammer shall be removed from service until repaired to the satisfaction of the Engineer.

(c) Drive System Components and Accessories:

(1) Hammer Cushion: Impact pile driving equipment designed to be used with a hammer cushion shall be equipped with a suitable thickness of hammer cushion material to prevent damage to the hammer or pile and to insure uniform driving behavior. Hammer cushions shall be made of durable manufactured materials, provided in accordance with the hammer manufacturer's guidelines. Wood, wire rope, and asbestos hammer cushions are specifically disallowed and shall not be used. A striker plate as recommended by the hammer manufacturer shall be placed on the hammer cushion to insure uniform compression of the cushion material. The hammer cushion shall be removed from the helmet and inspected prior to beginning pile driving at each structure or after each 100 hours of pile driving, whichever is less. The Contractor shall replace any hammer cushion whose thickness is less than 75% of the original thickness.

(2) Helmet: Piles driven with impact hammers require an adequate helmet or drive head to distribute the hammer blow to the pile head. The helmet shall be axially aligned with the hammer and the pile. The helmet shall be guided by the leads and not be free-swinging. The helmet shall fit around the pile head in such a manner as to prevent transfer of torsional forces during driving, while maintaining proper alignment of hammer and pile. For steel and timber piling, the pile heads shall be cut squarely and a helmet, as recommended by the hammer manufacturer, shall be provided to hold the axis of the pile in line with the axis of the hammer. For precast concrete and prestressed concrete piles, the pile head shall be plane and perpendicular to the longitudinal axis of the pile to prevent eccentric impacts from the helmet. For special types of piles, appropriate helmets, mandrels or other devices shall be provided in accordance with the manufacturer's recommendations so that the piles may be driven without damage.

(3) Pile Cushion: The heads of concrete piles shall be protected by a pile cushion. Pile cushions shall be made of plywood, hardwood, or composite plywood and hardwood materials. The minimum pile cushion thickness placed on the pile head prior to driving shall be at least 4 in (100 mm). A new pile cushion shall be provided for each pile. In addition the pile cushion shall be replaced if, during the driving of any pile, the cushion is compressed more than 1/2 the original thickness or it begins to burn. The pile cushion dimensions shall match the cross sectional area of the pile top. The use of manufactured pile cushion materials in lieu of a wood pile cushion shall be evaluated on a case by case basis.

(4) Leads: Piles shall be supported in line and position with leads while being driven. Pile driver leads shall be constructed in a manner that affords freedom of movement of the hammer while maintaining alignment of the hammer and the pile to insure concentric impact for each blow. Leads may be either fixed or swinging type. Swinging leads, when used, shall be fitted with a pile gate at the bottom of the leads and, in the case of batter piles, a horizontal brace may be required between the crane and the leads. The pile section being driven shall not extend above the

leads. The leads shall be adequately embedded in the ground or the pile constrained in a structural frame such as a template to maintain alignment. The leads shall be of sufficient length to make the use of a follower unnecessary, and shall be so designed as to permit proper alignment of batter piles.

(5) Followers: Followers shall only be used when approved in writing by the Engineer, or when specifically stated in the Contract. In cases where a follower is permitted, the first pile in each bent and every tenth pile driven thereafter shall be driven full length without a follower, to determine that adequate pile penetration is being attained to develop the ultimate pile capacity. The follower and pile shall be held and maintained in equal and proper alignment during driving. The follower shall be of such material and dimensions to permit the piles to be driven to the penetration depth determined necessary from the driving of the full length piles. The final position and alignment of the first two piles installed with followers in each substructure unit shall be verified to be within the required location tolerances before additional piles are installed.

(6) Jets: Jetting shall only be permitted if approved in writing by the Engineer or when specifically stated in the contract documents. When jetting is not required in the contract documents, but approved after the Contractor's request, the Contractor shall determine the number of jets and the volume and pressure of water at the jet nozzles necessary to freely erode the material adjacent to the pile without affecting the lateral stability of the in place pile. When jetting is specifically required in the contract documents, the plant shall have sufficient capacity to deliver at all times at least 100 psi (700 kPa) pressure at two 3/4-in (19 mm) jet nozzles. In either case, unless otherwise indicated by the Engineer, jet pipes shall be removed when the pile toe is a minimum of 5 ft (1.5 m) above prescribed toe elevation and the pile shall be driven to the required ultimate pile capacity with an impact hammer. Also, the Contractor shall control, treat if necessary, and dispose of all jet water in a manner satisfactory to the Engineer and in accordance with Article 1.10.

(7) Pre-Augering: When stated in the Contract, the Contractor shall pre-auger holes at pile locations to the depths shown on the plans. Pre-augered holes shall be of a size smaller than the diameter or diagonal of the pile cross section; however, large enough to allow penetration of the pile to the specified depth. If subsurface obstructions, such as boulders or rock layers, are encountered, the hole diameter may be increased to the least dimension which is adequate for pile installation. Any void space remaining around the pile after completion of driving shall be filled with sand or other approved material. The use of spuds shall not be permitted in lieu of pre-augering. Augering, wet-rotary drilling, or other methods of pre-augering shall be used only when approved by the Engineer. When permitted, such procedures shall be carried out in a manner which will not impair the capacity of the piles already in place or the safety of existing adjacent structures. If the Engineer determines that pre-augering has disturbed the capacities of previously installed piles, those piles that have been disturbed shall be restored to conditions meeting the requirements of this specification by redriving or by other methods acceptable to the Engineer. Redriving or other remedial measures shall be instituted after the pre-augering operations in the area have been completed.

3. Pile Capacity

(a) Ultimate Pile Capacity: Piles shall be driven by the Contractor to the penetration depth shown on the plans or to a greater depth if necessary to obtain the ultimate pile capacity. The ultimate pile capacity shall be as defined in the contract documents.

Jetting or other methods shall not be used to facilitate pile penetration unless specifically permitted in the Contract or in writing by the Engineer. The ultimate pile

capacity of jetted piles shall be based on driving resistances recorded during impact driving after the jet pipes have been removed. Jetted piles not attaining the ultimate pile capacity at the ordered length shall be spliced, as required, at the Contractor's cost, and driven with an impact hammer until the ultimate pile capacity is achieved.

The ultimate pile capacity of piles driven with followers shall only be considered acceptable when the follower driven piles attain the same pile toe elevation or top of bedrock elevation as required for the full length piles driven without followers that attained the required ultimate pile capacity.

(b) Wave Equation: The ultimate pile capacity shall be determined by the Engineer. Piles shall be driven with the approved driving equipment to the ordered length or other lengths necessary to obtain the required ultimate pile capacity. Jetting or other methods to facilitate pile penetration shall not be used unless specifically permitted either in the contract documents or approved by the Engineer after a revised driving resistance is established from the wave equation analysis. Adequate pile penetration shall be considered to be obtained when the specified wave equation resistance criteria is achieved within 5 ft (1.5 m) of the pile toe elevation, based on ordered length. Piles not achieving the specified resistance within these limits shall be driven to penetrations established by the Engineer.

(c) Static Load Tests: Compression load tests shall be performed by procedures set forth in ASTM D-1143 using the quick load test method, except that the test shall be taken to plunging failure or the capacity of the loading system. Testing equipment and measuring systems shall conform to ASTM D-1143, except that the loading system shall be capable of applying 150% of the ultimate pile capacity as stated in the contract documents, and that a load cell and spherical bearing plate shall be used. The apparatus shall be constructed to allow the various increments of the load to be placed gradually, without causing vibration to the test pile. The Contractor shall submit to the Engineer for approval working drawings of the loading apparatus in accordance with Article 1.05.02. When the approved method requires the use of tension (reaction) piles, the tension piles, when feasible, shall be of the same type and diameter as the production piles, and shall be driven in the location of permanent piles except that timber or tapered piles installed in permanent locations shall not be used as tension piles.

The top elevation of the test pile shall be determined immediately after driving and again just before load testing to check for heave. Any pile which heaves more than 1/4 in (6 mm) shall be redriven or jacked to the original elevation prior to testing. Unless otherwise specified in the contract, a minimum 3-day waiting period shall be observed between the driving of any anchor piles or the load test pile and the commencement of the load test.

On completion of the load testing, any test or anchor piling not a part of the finished structure shall be removed or cut off at least 1 ft (300 mm) below either the bottom of footing or the finished ground elevation, if not located within the footing area.

(d) Dynamic Pile Driving Analysis (PDA) Test: Dynamic measurements following procedures set forth in ASTM D-4945 will be taken during the driving of piles designated as dynamic monitoring test piles. The Contractor shall employ a qualified specialty Consultant, which has successfully completed no less than 10 dynamic pile driving tests, to perform the testing and report preparation for all Dynamic Pile Driving Analysis (PDA) Tests to be performed.

At least 30 days prior to driving the test piles the Contractor shall submit to the Engineer for review and approval the qualified specialty consultant, as well as the complete installation, and testing procedures. The submittal shall include all

necessary pile driving equipment and support facilities to drive the piles to capacities and depths shown on the plans within allowable stress limits. As part of the submittal the Contractor's Consultant shall perform a wave equation analyses, and a summary report confirming that the pile driving system proposed by the Contractor can meet the capacity, driving resistance and allowable stress limits.

All equipment necessary for the dynamic monitoring of the piles such as gages, cables, etc., shall be furnished by the Contractor's Consultant. The equipment shall meet the requirements of ASTM D-4945, Standard Test Method for High Strain Dynamic Testing of Piles, and be capable of testing the pile to 1-1/2 times the ultimate pile capacity. An experienced engineer, who has successfully completed no less than 10 dynamic pile driving tests, shall operate the Pile Driving Analyzer in the field. The Contractor shall furnish a shelter within 100 ft (30 m) of test location(s) to protect the dynamic test equipment from the elements. The shelter shall be a minimum floor size of 400 s.f. (40 sq.m), with a minimum ceiling height of 7 ft (2 m), and an inside temperature maintained between 50 and 85°F (10 and 29°C).

The Contractor shall provide power to the test pile locations for the duration of the dynamic testing. The power supply shall consist of a power source providing 115-Volt alternating current with a frequency of 60 Hz and a minimum of 2 kilowatts. If field generators are used as the power source, provide functioning meters to monitor power voltage and frequency. Direct current welders or non-constant power sources are unacceptable.

Prior to lifting the pile to be dynamically tested, the Contractor shall provide as a minimum 3 ft (1 m) of clear access to 180 degree opposite faces of the pile for pile preparation. The Contractor or its Consultant shall then drill and prepare holes in the pile for gage attachment.

The Contractor or its Consultant shall attach the gages to the pile before driving the piles. Pile driving shall be performed using routine pile installation procedures. When the level of the gages is within 1 ft (300 mm) of the ground surface, or obstruction, driving shall be halted to remove the gages from the pile. If additional driving is required, the pile shall be spliced and gages shall be reattached to the head of the next pile segment.

With the dynamic testing equipment attached, the Contractor shall drive the pile to the design penetration depth, or to a depth determined by the Engineer. The Engineer will use the ultimate pile capacity estimates at the time of driving or restriking from dynamic test methods, or both, to determine the required pile penetration depth for the ultimate pile capacity. The stresses in the piles will be monitored during driving with the dynamic test equipment to ensure that the actual driving stresses do not exceed the maximum allowed values. If necessary, the Contractor shall reduce the driving energy transmitted to the pile by using additional cushions or reducing the energy output of the hammer in order to maintain driving stresses below the maximum values. If non-axial driving is indicated by dynamic test equipment measurements, the Contractor shall immediately realign the driving system.

After the initial drive of the pile, the Contractor shall wait 24 hours, or the time specified in the Contract, and restrike the dynamic monitoring test pile with the dynamic testing instruments attached. A cold hammer shall not be used for the restrike. The hammer shall be warmed up before restrike begins by applying at least 20 blows to another pile. The maximum amount of penetration required during restrike shall be 6 in (150 mm), or 50 hammer blows, whichever occurs first.

The Contractor’s Consultant shall provide preliminary estimates of pile capacity of the test pile to the Engineer within 24 hours of the restrike of each tested pile. The Contractor’s Consultant shall also prepare and submit a written report within 5 calendar days of the completion of the testing. This report shall contain a discussion of the pile capacity obtained from the dynamic testing. CAPWAP analyses of the dynamic testing data shall be performed on data obtained at the end of initial driving and the beginning of restrike. The Engineer may request additional analyses at selected pile penetration depths. The report shall also discuss hammer and driving system performance, driving stress levels, and pile integrity. The report is to be prepared, signed, sealed and dated by a Connecticut licensed Professional Engineer. Production piles cannot be driven until the report has been submitted and approved by the Engineer.

4. Test Piles and Order Lists: Test piles shall be driven at the locations shown on the plans and to the penetration depths specified by the Engineer. Test piles shall be driven to a driving resistance established by the Engineer at the estimated pile toe elevation. The Contractor shall excavate the ground at each test pile to the elevation of the bottom of the footing before the pile is driven. All test piles shall be driven with impact hammers unless specifically stated otherwise in the plans. In general, the specified length of test piles will be greater than the estimated length of production piles in order to provide for variation in soil conditions. The driving equipment used for driving test piles shall be identical to the equipment proposed for driving the production piling. Approval of driving equipment shall meet the requirements of these Specifications.

Test piles that do not attain the specified driving resistance at a depth of 6 in (150 mm) above the estimated pile tip elevation, or are specified as a dynamic monitoring pile, shall be redriven after being allowed to set up. The minimum time period before restrike shall be 24 hours, or as specified in the Contract. A cold hammer shall not be used for the restrike. The hammer used shall be warmed up by applying at least 20 blows to another pile.

Unless otherwise specified in the contract documents, the Contractor shall not order piling to be used in the permanent structure until test pile data has been reviewed and pile order lengths are authorized by the Engineer. The Engineer will provide the pile order list after completion of the test pile(s) and dynamic pile driving analysis (PDA) tests and/or pile loading tests specified in the Contract.

When no test piles are specified for a substructure, the estimated pile lengths in the Contract are taken as the pile order length.

The lengths given in the order list will be based on the lengths which are assumed after cutoff to remain in the completed structure. The Contractor shall, without added compensation, increase the lengths to provide for fresh heading and for such additional length as may be necessary to suit the Contractor's method of operation.

5. Pile Preparation and Driving: The heads of all piles shall be plane and perpendicular to the longitudinal axis of the pile before the helmet is attached. Approval of a pile hammer relative to driving stress damage shall not relieve the Contractor of responsibility for piles damaged because of misalignment of the leads, failure of cushion materials, failure of splices, malfunctioning of the pile hammer, or other improper construction methods. Piles damaged for such reasons shall be rejected and replaced at the Contractor's expense when the Engineer determines that the damage impairs the strength of the pile.

If it becomes necessary and is authorized by the Engineer to resort to jetting, spudding or pre-holing — and further, if no Contract bid price is asked for in the proposal for jetting, spudding, or pre-holing — such work will be paid for as "extra work" in

accordance with Articles 1.04.05 and 1.09.04.

The use of a hammer with a greater mass, or the use of piles manufactured or designed with pile tips of a nature to provide for better penetration such as but not limited to composite shells, tapered sections or H-pile sections, shall not be considered as extra work. Authorized point reinforcement for piles shall be a separate item.

Piles for exposed pile bents shall be driven with pile driver leads and templates. They shall be of rigid design and construction and shall maintain the required position and alignment of the piles within the tolerances hereinafter specified. Templates shall be anchored or spudded into position, shall be capable of guiding all piles required for the bent and shall remain in place until all the piles in the bent are driven.

(a) Location and Alignment Tolerance: Piles shall be driven with a variation of not more than 1/4 in/ft (20 mm/m) from the vertical or from the batter line indicated, except that piles for trestle bents shall be so driven that the cap may be placed in its proper location without inducing excessive stresses in the piles. Upon completion of driving and released from leads, exposed piles such as in bents shall not have a variation of more than 2 in (50 mm) at the cut-off elevation from the position shown on the plans. Unless otherwise permitted in writing by the Engineer, failure to meet this tolerance shall be cause for rejection. Other foundation piles shall not be out of the position shown on the plans more than 6 in (150 mm) after driving. The Engineer may require that driving be stopped in order to check the pile alignment. Pulling laterally on piles to correct misalignment, or splicing a properly aligned section on a misaligned section shall not be permitted.

If the location and/or alignment tolerances specified are exceeded, the extent of overloading shall be evaluated by the Engineer. If in the judgment of the Engineer, corrective measures are necessary, suitable measures shall be designed and constructed by the Contractor.

(b) Heaved Piles: Level readings to measure pile heave after driving shall be made by the Contractor at the start of pile driving operations and shall continue until the Engineer determines that such checking is no longer required. Level readings shall be taken immediately after the pile has been driven and again after piles within a radius of 15 ft (4.5 m) have been driven. If pile heave is observed, the Contractor shall take accurate level readings referenced to a fixed datum on all piles immediately after installation and periodically thereafter as adjacent piles are driven to determine the pile heave range. All piles that have been heaved more than 1/4 in (6 mm) shall be redriven at the Contractor's expense, to the required resistance or penetration. Concrete shall not be placed in pile casings until pile driving has progressed beyond a radius of 15 ft (4.5 m) from the pile to be concreted. If pile heave is detected for pipe or shell piles which have been filled with concrete, the piles shall be redriven to original position after the concrete has obtained sufficient strength and a proper hammer-pile cushion system, satisfactory to the Engineer, is used.

(c) Installation Sequence: The order of placing individual piles in pile groups shall be either starting from the center of the group and proceeding outwards in both directions or starting at the outside row and proceeding progressively across the group.

6. Unsatisfactory Piles: The method used in driving piles shall not subject the piles to excessive or undue abuse producing crushing and spalling of concrete, injurious splitting, splintering, and brooming of the wood, or deformation of the steel. Misaligned piles shall not be forced into proper position. Any pile damaged during driving by reason of internal defects, or by improper driving, or driven out of its proper location, or driven below the designated cutoff elevation, shall be corrected

by the Contractor by a method approved by the Engineer.

Piles which have been bent during installation shall be considered unsatisfactory unless the ultimate capacity is proven by load tests performed at the Contractor's expense. If such tests indicate inadequate capacity, corrective measures as determined by the Engineer shall be taken, such as use of bent piles at reduced capacity, installation of additional piles, strengthening of bent piles, or replacement of bent piles.

A concrete pile will be considered defective if a visible crack, or cracks, appears around the entire periphery of the pile, or if any defect is observed which, as determined by the Engineer, affects the strength or life of the pile.

7. Splicing Piles and Extensions: Full length piles shall be used when practicable; but if splices cannot be avoided, piles or shells for cast-in-place piles may be spliced in accordance with the requirements of the plans. Piles shall not be spliced except with the approval of the Engineer. Splices in excess of two per pile for timber, steel and cast-in-place concrete piles will not be permitted except with special permission of the Engineer. Only one splice per pile will be permitted in precast concrete or prestressed concrete piles. In the absence of splice details in the plans, piles or shells for cast-in-place concrete piles shall be spliced in accordance with the pile or shell manufacturer's recommendations, subject to the approval of the Engineer. Working Drawings for prefabricated splicing devices and their method of installation shall be submitted to the Engineer for review. All seams, joints and splices shall develop the full strength of the pile.

8. Point Reinforcement: When directed by the Engineer, the contractor shall point-reinforce piles. Such point-reinforcement shall be in accordance with the plans or as directed.

9. Cutoff Lengths: The pile head of all permanent piles and pile casings shall be cutoff at the elevation shown on the plans or as ordered by the Engineer. All cutoff lengths shall become the property of the Contractor, and shall be removed by the Contractor from the Site of the work.

10. Painting Steel Piles and Steel Pile Shells: When steel piles or steel pile shells extend above the ground surface or water surface, they shall be painted as specified elsewhere in the Contract or as ordered by the Engineer. This protection shall extend from an elevation 2 ft (600 mm) below the ground or water surface to the top of the exposed steel.

11. Welding on Piles: When required or permitted, all welding on piles shall be done in accordance with the requirements of the current AWS Structural Welding Code.

7.02.04—Method of Measurement

1. Steel Piles-Timber Piles-Precast Concrete Piles: The length of (type) piles which will be the basis for the pay computation to be included under the item of furnishing (type) piles, shall be number of linear feet (meters) of (type) piles authorized by the Engineer or actually furnished by the Contractor, whichever is the lesser amount.

Length of pile cutoffs previously paid for under authorized lengths of piles and subsequently incorporated into the work will not be measured for payment.

The work, materials, tools, equipment and labor incidental to the disposal of pile cutoffs will not be measured for payment.

The amounts to be included under the item for driving (type) piles will be the number of linear feet (meters) of piles actually driven and accepted in the completed structure.

2. Cast-in-Place Concrete Piles: The amount to be included under the item of cast-in-place concrete piles shall be the number of linear feet (meters) of piles actually driven and accepted in place in the completed structure.

Cut-off materials from shells shall remain the property of the Contractor. They will be paid for in accordance with the unit cost applying in the Contractor's bill or bills for such shells, except that no payment will be made of material cut off from shells furnished by the Contractor in excess of the ordered length. The unit of measurement will be the unit applying in the Contractor's bill or bills for such shells. Material cut off from shells furnished by the Contractor in lengths in excess of those ordered by the Engineer will not be measured for payment hereunder. The work, materials, tools, equipment and labor incidental to the disposal of cutoffs will not be measured for payment.

Reinforcement, if required in cast-in-place concrete piles, will not be measured for payment.

3. Prestressed Concrete Piles (Pretensioned): The length of the prestressed concrete piles, which will be the basis for the pay computation, shall be the number of linear feet (meters) of piles authorized by the Engineer or actually furnished by the Contractor, whichever is the lesser amount. The length of any specified pile tip protruding from the concrete will be included in the length measured for payment.

Also included in the length measured for payment will be the length of precast pile extensions ordered by the Engineer. Not to be included, however, is the length of pile extension furnished in excess of the ordered length. The length of projection dowels shall not be included in the length measured for payment.

Extensions to prestressed concrete piles which are poured monolithically with the footing or pier cap will be paid for at the Contract unit prices for the several items involved, which prices shall be full compensation for all materials, tools, equipment and labor necessary to the completion of the work.

Cut-offs shall not be used for pile extension. The work, material, tools equipment and labor incidental to the disposal of cutoffs will not be measured for payment.

The amounts to be included under the item for driving prestressed concrete piles shall be the number of linear feet (meters) of piles actually driven and accepted in the completed structure.

4. Test Piles: The amounts to be included under the respective items for test piles, of the type and length specified, shall be the number of test piles actually driven and accepted. Lengths of test piles ordered by the Engineer in excess of the length or lengths specified in the Contract will be measured for payment by the actual number of linear feet (meters) ordered, furnished and accepted by the Engineer. Driving of such pile extensions will be measured for payment by the actual length driven and left in place.

Authorized splices performed on test piles will be measured for payment by the number of authorized splices actually completed and accepted. Splicing of test piles shall not be considered as authorized splices when such splicing is done to complete piles to the test pile length specified in the Contract.

5. Static Load Tests: The amount to be included under the item of static loading tests shall be the actual number of static load tests completed and accepted.

6. Dynamic Pile Driving Analysis (PDA) Test: The amount to be included under this item shall be the actual number of piles which are driven and restruck with dynamic monitoring equipment attached, completed and accepted.

7. Splices: The amount to be included under the items for splicing timber, steel, cast-in-place concrete, precast concrete and prestressed concrete piles (pretensioned) shall be the number of authorized pile splices actually completed and accepted.

The splicing of timber and steel piles, steel shells for cast-in-place concrete piles, precast concrete piles and prestressed concrete piles (pretensioned) shall not be considered as authorized splices when such splicing is performed to complete piles to the order lengths, as defined in Subarticle 7.02.03-7, or when the furnished lengths of such piles are less than the order lengths approved by the Engineer.

8. Point Reinforcement for Piles: The amount to be included under the item of "Point Reinforcement for Piles" for the type of piles specified shall be the number of authorized reinforced points actually completed and accepted.

9. Pre-Augering of Piles: The amount to be included under the item “Pre-Augering of Piles” shall be the number of linear feet (meters) of pre-augering completed and accepted by the Engineer.

7.02.05--Basis of Payment: This work will be paid for as follows:

1. Steel Piles: Payment for furnishing steel piles of the lengths authorized will be at the Contract unit price per pound (kilogram) for "Furnishing Steel Piles," which price shall include furnishing, delivery, storage and handling, and all materials, equipment, tools and labor incidental thereto. The weight (mass) of steel pile caps will be included with and paid for under this item.

Payment for driving steel piles will be at the contract unit price per linear foot (meter) for "Driving Steel Piles," complete in place, which price shall include all materials, equipment, tools and labor incidental thereto.

2. Timber Piles: Payment for furnishing timber piles or treated timber piles, up to a length 10 ft (3 m) greater than that specified on the plans or in the proposal form, will be at the Contract unit price per foot (meter) for "Furnishing Timber Piles (Length)" and "Furnishing Treated Timber Piles (Length)," respectively, which price shall include furnishing, delivery, peeling, storage and handling, and all materials, equipment, tools and labor incidental thereto.

In case the length of any piles finally ordered is more than 10 ft (3 m), but less than 20 ft (6 m), greater than the length specified on the plans or proposal form, payment for furnishing such piles shall be at a price per linear foot (meter) equal to the original Contract price, plus 20% thereof.

In case the length of any piles finally ordered is 20 ft (6 m) or more greater than the length specified on the plans or proposal form, payment for furnishing such piles shall be at a price per linear foot (meter) equal to the original Contract price plus 40% thereof.

Payment for driving timber piles or treated timber piles will be at the Contract unit price per linear foot (meter) for "Driving Timber Piles" and "Driving Treated Timber Piles," respectively, complete in place and regardless of length, which price shall include all materials, equipment, tools and labor incidental thereto.

3. Cast-in-Place Concrete Piles: Payment for cast-in-place concrete piles will be at the Contract unit price per linear foot (meter) for "Cast-in-Place Concrete Piles," complete in place, including all materials, equipment, tools and labor incidental thereto.

Cut-off materials from shells shall remain the property of the Contractor. They will be paid for in accordance with the unit cost applying in the Contractor's bill or bills for such shells, except that no payment will be made for material cut off from shells furnished by the Contractor in excess of the ordered length.

4. Prestressed Concrete Piles: Payment for furnishing prestressed concrete piles, of the lengths required, will be at the Contract unit price per linear foot (meter) for "Furnishing Prestressed Concrete Piles" of the type and size as shown on the plans, which price shall include furnishing, delivery, storage and handling, and all materials, equipment, tools and labor incidental thereto.

Payment for driving prestressed concrete piles will be at the Contract unit price per linear foot (meter) for "Driving Prestressed Concrete Piles," complete in place, which price shall include all material, equipment, tools and labor incidental thereto. Also included shall be all work involved in cutting piles to the direct cut-off elevation.

5. Test Piles: Test piles will be paid for at the Contract unit price each for "Test Pile," of the type and length specified, which price shall constitute the complete compensation for furnishing and driving test piles and shall include all materials, equipment, tools and labor incidental thereto. Authorized splices to test piles will be paid for at 200% of the Contract unit price bid for Splicing Timber Piles, Splicing Steel Piles, Splicing Cast-in-Place Piles or Splicing Prestressed Concrete Piles, whichever type of test pile the splice has been performed on; and such payment shall be for all costs including materials, equipment, tools and labor incidental thereto.

Extension to test piles in excess of the specified length will be paid for on the following basis, which shall include all equipment, tools, splices, labor and work incidental thereto.

(a) Timber Test Piles: Extensions will be paid for at 125% of the Contract unit price per linear foot (meter) for "Furnishing Timber Piles," of the shortest length specified in the proposal, and at 125% of the Contract unit price per linear foot (meter) for "Driving Timber Piles."

(b) Steel Test Piles: Extensions will be paid for at 125% of the Contract unit price per pound (kilogram) for "Furnishing Steel Piles" and at 125% of the Contract unit price per linear foot (meter) for "Driving Steel Piles."

(c) Cast-in-Place Concrete Test Piles: Extensions will be paid for at 125% of the Contract unit price per linear foot (meter) for "Cast-in-Place Concrete Piles." Cut-off materials from shells will be paid for as provided in Subarticle 7.02.05-3.

(d) Prestressed Concrete Test Piles: Extensions will be paid for at 125% of the Contract unit price per linear foot (meter) for "Furnishing Prestressed Concrete Piles," and at 125% of the Contract unit price per linear foot (meter) for "Driving Prestressed Concrete Piles."

6. Static Load Tests: Loading tests will be paid for at the Contract unit price each for "Pile Loading Test," which price shall include all expenses incidental to loading the pile or group of piles and removing the load, platform, etc., upon completion of the test.

7. Dynamic Pile Driving Analysis (PDA) Test: Dynamic monitoring will be paid for at the Contract unit price each for “Dynamic Pile Driving Analysis (PDA) Test” which price shall include complete compensation for each pile tested using a pile driving analyzer during driving and restrike, including all materials, equipment, tools and labor incidental thereto, as well as providing preliminary and summary report(s).

8. Splices: Authorized splices in timber, steel, cast-in-place piles, precast concrete and prestressed concrete piles will be paid for at the Contract unit price each for "Splicing Timber Piles," "Splicing Steel Piles," "Splicing Cast-in-Place Concrete Piles," "Splicing Precast Concrete Piles," "Splicing Prestressed Concrete Piles," respectively, which price shall include all materials, except as otherwise noted, and all equipment, tools and labor incidental thereto. In the absence of such prices, authorized splices will be paid for as extra work.

9. Trimming and Cutting: There shall be no direct compensation for cutting off timber, steel, precast concrete or prestressed concrete piles and shells for cast-in-place concrete piles as ordered; but the cost thereof shall be considered as included in the cost of the pile items.

10. Point Reinforcement for Piles: Authorized points for pointing and reinforcing piles will be paid for at the Contract unit price each for "Point Reinforcement for Timber Piles," or "Point Reinforcement for Steel Piles," respectively, whichever applies, which price shall

include all materials, equipment, tools and labor incidental thereto. In the absence of such prices, authorized points will be paid for as extra work.

11. Pre-Augering of Piles: Payment for “Pre-Augering of Piles” will be at the Contract unit price per linear foot (meter) for “Pre-Augering of Piles,” which price shall include which price shall include all materials, and all equipment, tools and labor incidental thereto.

12. Underground Obstructions: If the required pile penetration is not reached due to the presence of underground obstructions which are not the result of the Contractor's operations but are due to the presence of earlier construction at the site, then the cost of removing these obstructions and back-filling the area will be paid for as extra work unless otherwise specified in the Contract.

13. Painting: There will be no additional payment for painting steel piles and steel pile shells, but the cost thereof shall be considered as included in the cost of furnishing and driving the piles.

14. Disposal of Pile Cutoffs: All costs incidental to the disposal of cutoff material will be included in the price of furnishing of the type of pile specified.

Pay Item	Pay Unit
Furnishing (Type) Piles (Lengths)	lb. (kg)
Driving (Type) Piles	l.f. (m)
Test Pile (Type-Length)	ea. (ea.)
Splicing (Type) Piles	ea. (ea.)
Point Reinforcement for (Type) Piles	ea. (ea.)
Pile Loading Test	ea. (ea.)
Dynamic Pile Driving Analysis (PDA) Test	ea. (ea.)
Pre-Augering of Piles	l.f. (m)

CONNECTICUT
SUPPLEMENTAL SPECIFICATION
SECTION 7.06
MICROPILES

Add the following section:

SECTION 7.06
MICROPILES

7.06.01—Description
7.06.02—Materials
7.06.03—Construction Methods
7.06.04—Method of Measurement
7.06.05—Basis of Payment

7.06.01—Description: This work shall consist of constructing micropiles in accordance with the Contract. The Contractor is responsible for furnishing all design, materials, products, accessories, tools, equipment, services, transportation, labor and supervision required for design, installation and testing of micropiles and micropile top attachments for this Project.

The Contractor shall select the micropile type, size, pile-top attachment, installation means and methods, and shall estimate the grout-to-ground bond value(s) and determine the required grout bond length and final micropile diameter.

The Contractor shall design and install micropiles that will develop the load capacities indicated on the plans. The micropile load capacities shall be confirmed by verification and proof-load testing as required and must meet the test acceptance criteria specified herein. The Contractor's micropile design shall conform to requirements set forth in this specification and to micropile design minimums/maximums shown on the Contract drawings.

7.06.02—Materials: Furnish new materials without defects. Materials for micropiles shall meet the following requirements:

1. **Admixtures for Grout:** Admixtures shall be as specified in M.03.01. Accelerators are not permitted. Expansive admixtures and admixtures containing chlorides are not permitted.
2. **Cement:** Cement shall meet the requirements of ASTM C 150/AASHTO M85, Types II, III or V.
3. **Centralizers and Spacers:** Centralizers and spacers shall be fabricated from Schedule 40 PVC pipe.
4. **Grout:** Grout shall consist of neat cement or fine aggregate/cement mixture meeting the 3- and 28-day required compressive strengths specified in the Contract. The grout shall meet the requirements of AASHTO T106/ASTM C109 and any minimum and maximum properties shown on the plans or in M.03.05.
5. **Permanent Casing Pipe:** Permanent steel casing or steel pipe shall conform to required minimum and maximum properties shown on the plans. The steel casing or steel pipe shall comply with one or more of the following specifications: ASTM A252 or A106, or API N-80.
6. **Reinforcing Bars:** Reinforcing steel shall be deformed bars in accordance with ASTM A615/AASHTO M31. Continuous spiral deformations (*i.e.*, continuous thread bars) shall be used for same. Bar tendon couplers, if required, shall develop the ultimate tensile strength of the bars without evidence of any failure.
7. **Encapsulation:** Encapsulation (double corrosion protection) shall be shop-fabricated using high-density, corrugated polyethylene tubing meeting with the requirements of ASTM

D3350/AASHTO M252 with a nominal wall thickness of 0.03 in (0.8 mm). The inside annulus between the reinforcing bar(s) and the encapsulation tube shall measure a minimum 0.2 in (5 mm) and be fully grouted with non-shrink grout conforming to M.03.

7.06.03—Construction Methods:

1. **Contractor's Experience Requirements:** The micropile Contractor shall be experienced in the construction and load testing of micropiles, having successfully constructed at least 5 projects in the last 5 years involving construction totaling at least 100 micropiles of capacity similar to those required in this Contract.

   The Contractor shall have previous micropile drilling and grouting experience in soil/rock conditions similar to those on this Project. The Contractor shall submit construction details, structural details and load test results for at least 3 previous successful micropile load tests from different projects similar in scope to this Project.

   The Contractor shall assign or hire a professional engineer, licensed in the State of Connecticut, to supervise the micropile work. That engineer shall have experience on at least 10 projects of similar scope to this Project, completed over the past 5 years. The Contractor shall not use manufacturers' representatives to satisfy the supervising engineer requirements of this Section. The Contractor may use a single independent consultant for this purpose, provided that the consultant has specific experience as described above and operates specifically for the purpose of transferring technology and skills in micropiling to contractors. The on-Site foremen and drill rig operators shall also have experience on at least 10 projects over the past 5 years installing micropiles of equal or greater capacity than is required in this Contract.

   The Contractor shall assign or hire a professional engineer, licensed in the State of Connecticut, to design the micropiles. This engineer shall have experience in the design of at least 3 successfully-completed micropile projects over the past 5 years, with micropiles of capacity similar to those in this Contract. This engineer shall also be responsible for design, supervision and reporting of the verification and proof test(s).

   At least 45 calendar days before the planned start of micropile construction, the Contractor shall submit 5 copies of the completed Project reference list and a personnel list. The Project reference list shall include a brief Project description with the owner's name and current phone number and load test reports. The personnel list shall identify the supervising Project Engineer, drill rig operators, and on-Site foremen to be assigned to this Project by the Contractor. The personnel list shall contain a summary of each individual's experience and be complete enough for the Engineer to determine whether each individual has the required qualifications.

   Work shall not start, nor materials be ordered, until the Engineer gives written approval of the Contractor's experience qualifications. The Engineer may suspend work if the Contractor uses non-approved personnel on the Project. If work is suspended for that reason, the Contractor shall be fully liable for all resulting costs, and Department will not make any Contract time adjustments because of the suspension.

2. **Micropile Design Requirements and Submittals:** The micropiles shall be designed to meet the specific loading conditions, as shown on the plans and approved working drawings. The micropile design shall conform to all required minimum and maximum properties shown on the plans, the "American Association of State Highway and Transportation Officials (AASHTO) LRFD Bridge Design Specifications" (including the latest Interims), and the "Connecticut Department of Transportation Bridge Design Manual."

   Where called for on the plans, the Contractor shall provide corrosion protection of the internal steel reinforcing bars, consisting of encapsulation, epoxy coating or grout. Where the permanent casing is used for a portion of the micropile, the corrosion protection shall extend at least 5 ft (1.5 m) into the casing. Steel pipe used for micropile permanent casing

shall incorporate an additional 1/16 in (1.6 mm) thickness of sacrificial steel for corrosion protection.

The Contractor shall submit working drawings, in accordance with 1.05.02, to the Engineer. The working drawings shall include all information required for the design, plans, construction and quality control of the micropile installation. The information shall include, but not necessarily be limited to, the following:

(a) Design Computations

I. A written summary report describing the overall micropile design.
II. A statement of applicable code requirements and design references.
III. Micropile structure critical design cross-section(s) geometry, including soil/rock strata and piezometric levels and location, magnitude and direction of applied loadings, including slope or external surcharge loads.
IV. A description of design criteria to be applied to the work, including, soil/rock shear strengths (friction angle and cohesion), unit weights, and grout-to-ground bond value(s) and micropile drill-hole diameter assumptions for each soil/rock stratum.
V. A statement of Resistance/Load factors used in the design of the grout-to-ground bond value(s), surcharges, soil/rock and material unit weights, steel, grout and concrete materials.
VI. Design calculation sheets with the Project number, micropile structure location, designation, date of preparation, initials of designer and checker, and page number at the top of each page. Provide an index page for the design calculations.
VII. Design notes including a list of symbols and computer program used in the design.
VII. Pile-to-footing connection calculations.

(b) Plans

I. A plan view of the micropile structures providing:
   1) A reference baseline and elevation datum.
   2) The offset from the construction centerline or baseline to the face of the micropile structure at all changes in horizontal alignment.
   3) Beginning and end of micropile structure stations.
   4) Right-of-way and permanent or temporary construction easement limits, location of all known active and abandoned utilities, adjacent structures or other potential interference; and the centerline of any drainage structure or drainage pipe behind, passing through or passing under the micropile structure.
   5) Subsurface exploration locations shown on the plan view of the proposed micropile structure alignment with appropriate reference baselines to fix the locations of the exploration relative to the micropile structure.
II. An elevation view of the micropile structure(s) providing:
   1) Elevation view showing micropile locations and elevations; vertical and horizontal spacing; batter and alignment and the location of drainage elements (if applicable).
   2) Existing and finished grade profiles both behind and in front of the micropile structure.
III. Design parameters and applicable codes.
IV. General notes for constructing the micropile structure, including construction sequencing or other special construction requirements.
V. Horizontal and vertical curve data affecting the micropile structure and micropile structure control points. Match lines or other details to relate micropile structure stationing to centerline stationing.
VI. A listing of the summary of quantities on the elevation drawing of each micropile structure, showing pay item estimated quantities.

VII. Micropile typical sections, including micropile spacing and inclination; minimum drill-hole diameter; pipe casing and reinforcing bar size and details; splice type and locations; centralizers and spacers; grout bond zone and casing plunge length (if used); corrosion protection details; and connection details to the substructure footing, anchorages and plates.

VIII. A typical detail of verification and production proof test micropiles defining the micropile length, minimum drill-hole diameter, inclination, and load test bonded and unbonded test lengths.

IX. Details, dimensions and schedules for all micropiles, casing and reinforcing steel, including reinforcing bar bending details.

X. Details for constructing micropile structures around drainage facilities (if applicable).

(c) Construction Procedures

I. Detailed step-by-step description of the proposed micropile construction procedure, including personnel, testing and equipment to ensure quality control. This step-by-step procedure shall be shown in sufficient detail to allow the Engineer to monitor the construction and quality of the micropiles.

II. Proposed start date, time schedule and micropile installation schedule providing the following:

1) Micropile number.
2) Micropile design load.
3) Type and size of rebar.
4) Minimum total bond length.
5) Total micropile length.
6) Micropile top footing attachment.

III. If welding of casing is proposed, submit the welding procedure. All welding shall be done in accordance with the current AWS Structural Welding Code.

IV. Information on space requirements for installation equipment that verify the proposed equipment can perform at the Site.

V. Proposed plan describing how surface water, drill flush, and excess waste grout will be controlled and disposed. This will include computations showing that the proposed equipment used for flushing the micropile during installation (*i.e.*, pumps for water flushing and compressors for air flushing) will maintain up-hole (flushing) velocities necessary to ensure that all of the flush and drill cuttings are returned up through the annulus between the drill rod and casing.

VI. Certified mill test reports for the reinforcing steel and for permanent casing. The ultimate strength, yield strength, elongation, and material properties composition shall be included. For API N-80 pipe casing, coupon test results may be submitted in lieu of mill certification.

VII. Proposed Grouting Plan. The grouting plan shall include complete descriptions, and details for the following:

a. Grout mix design and type of materials to be used in the grout, including certified test data and trial batch reports. The Contractor shall also provide specific gravity of the wet mix design.
b. Methods and equipment for accurately monitoring and recording the grout depth and grout volume as the grout is being placed.
c. Estimated curing time for grout to achieve specified strength. Previous test results for the proposed grout mix completed within 1 year of the start of grouting may be submitted for initial verification and acceptance and start of production work. During production, grout shall be tested in accordance with Article M.03.05.
d. Procedure and equipment for Contractor monitoring of grout quality. At a minimum, the Contractor shall be required to use a Baroid Mud Balance (per API

RP-13B-1) to check the specific gravity of the mixed grout prior to placement into each drilled micropile.

(d) Detailed plans for the proposed micropile load testing method. This shall include all drawings, details, and structural design calculations necessary to clearly describe the proposed test method, reaction load system capacity and equipment setup, types and accuracy of apparatus to be used for applying and measuring the test loads and pile top movements in accordance with this Specification.

(e) Calibration reports and data for each test jack, pressure gauge and master pressure gauge and electronic load cell to be used. The calibration tests shall have been performed by an independent testing laboratory within 90 calendar days of the date submitted. Testing shall not commence until the Engineer has reviewed and accepted the jack, pressure gauge, master pressure gauge and electronic load cell calibration data.

Work shall not begin until the construction submittals have been received, reviewed, and accepted in writing by the Engineer. Any submittals found to be unacceptable by the Engineer shall be revised, resubmitted and accepted prior to commencing work.

3. **Pre-construction Meeting:** A pre-construction meeting will be scheduled by the Engineer and held prior to the start of micropile construction. The Engineer, prime Contractor, micropile specialty Contractor and micropile design engineer shall attend the meeting. Attendance is mandatory. The pre-construction meeting will be conducted in order to clarify the construction requirements for the work, to coordinate the construction schedule and activities, and to identify contractual relationships and delineation of responsibilities among the prime Contractor and the various subcontractors - specifically those pertaining to excavation for micropile structures, installation of temporary sheeting, anticipated subsurface conditions, micropile installation and testing, micropile structure survey control and Site drainage control.

4. **Site Drainage Control:** The Contractor shall control and properly dispose of drill flush and construction related waste, including excess grout, in accordance with Section 1.10, any related Special Provisions in the Contract, and all applicable codes and regulations. Drill flush shall be conveyed by pipe, hose or conduit away from the location where the micropile is being drilled and away from any adjacent structure or facility. The Engineer will determine the acceptable distance required to convey the drill flush away from the micropile location. The Contractor shall provide positive control and discharge of all surface water that will affect construction of the micropile installation; maintain all pipes or conduits used to control surface water during construction; and repair any damage caused by surface water at no additional cost to the Department. Upon substantial completion of the work, the Contractor shall remove surface water control pipes or conduits from the Site. Alternatively, with the approval of the Engineer, the Contractor may leave pipes or conduits in place if fully grouted.

The Contractor shall immediately contact the Engineer if unanticipated existing subsurface drainage structures or other utilities are discovered during excavation or drilling; and shall suspend work in such areas until remedial measures meeting the Engineer's approval are implemented.

5. **Micropile Allowable Construction Tolerances:**

(a) Centerline of piling shall not be more than 3 in (75 mm) from indicated plan location. Centerline of reinforcing steel shall not be more than 0.5 in (13 mm) from the centerline of the pile.

(b) Pile shall be plumb or battered within 2% of total-length plan alignment.

(c) Top elevation of pile shall be plus 1 in (25 mm) or minus 1 in (25 mm) maximum from vertical elevation indicated.

6. **Micropile Installation:** The micropile Contractor shall select the drilling method, the grouting procedure and the grouting pressure used for installation of the micropiles. The micropile Contractor shall also determine the micropile casing size, final drill-hole diameter and bond length, and central tendon reinforcement steel size necessary to develop the specified load capacities and load testing requirements. All micropile material properties and dimensions shall conform to minimum/maximum properties and dimensions as shown in the Contract drawings. The micropile Contractor is also responsible for estimating the grout take. The Department will make no extra payment for grout overruns.

   Should the plans require uncased drilling of the micropile into bedrock, the permanent or temporary casing shall be drilled a minimum 6 in (150 mm) into ledge or to a depth within the ledge so as to prevent subsidence of overburden into the uncased and bonded zone portion of the drill-hole (*i.e.*, the rock socket). The plans show estimated permanent casing lengths for each substructure unit. Any difference in the required length of permanent casing accepted by the Engineer from the estimated lengths shown on the plans shall be measured for payment and credit. The Department will make no payment for differences in required length of temporary casing.

   The drilling equipment and methods shall be suitable for drilling through the conditions to be encountered, without causing damage to the overburden, any overlying or adjacent structures, buried structures, utilities or services. If called for in the drilling method description, or by the nature of the stratum to be drilled through, the micropile Contractor shall furnish an overburden casing of the type and thickness that can be installed without distortion. Casings that fail, fracture, or otherwise distort during drilling or after drilling shall, unless otherwise directed, be withdrawn or replaced at the micropile Contractor's expense. The drill-hole must be open along its full length to at least the design minimum drill-hole diameter prior to placing grout and reinforcement.

   Temporary casing or other approved method of pile drill-hole support will be required in caving or unstable ground in order to permit the pile shaft to form a drill hole of the minimum design diameter. The Contractor's proposed method(s) to provide drill-hole support and to prevent detrimental ground movements must be reviewed by the Engineer in advance of its use. Detrimental ground movement is defined as movement that requires remedial repair measures, in order to maintain Site conditions as determined by the Engineer.

   Drilling and flushing methods shall be selected by the Contractor. Use of drilling fluid containing bentonite or any other non-reverting drilling fluid, however, is not allowed. The drilling and flushing system chosen by the Contractor shall be capable of providing the necessary up-hole velocity so as to ensure that all the flush and drill cuttings are returned up through the annulus between the drill rod and casing. The flush must not be allowed to escape in an uncontrollable fashion into the soil and rock formations outside the casing. The return flush must never be blocked or suppressed within the casing on its way back to the surface. The Contractor shall monitor and modify, as needed, the flush velocity and other elements of its drilling methods that could contribute to return of flush outside the casing. When return of flush is substantially lost during drilling, the Contractor shall halt drilling operations and immediately notify the Engineer of the situation.

   During construction, the Contractor shall observe the ground conditions in the vicinity of the micropile construction site on a daily basis for signs of ground heave or subsidence, and must immediately notify the Engineer if signs of movements are observed. The micropile Contractor shall immediately suspend or modify drilling or grouting operations if ground heave or subsidence is observed, if the micropile structure is adversely affected, or if adjacent structures are damaged because of the drilling or grouting. If the Engineer determines that the movements require corrective action, the micropile Contractor shall take corrective actions necessary to stop the movement or perform repairs.

   Reinforcement may be placed prior to grouting the drill-hole. Reinforcement surface shall

be free of deleterious substances such as soil, mud, grease or oil that might contaminate the grout or coat the reinforcement and impair bond. Pile reinforcement groups, if used, shall be sufficiently strong to withstand the installation and grouting process without damage or disturbance.

The micropile Contractor shall check pile-top elevations and adjust all installed micropiles to the planned elevations.

Centralizers and spacers shall be provided at 10 ft (3 m) on center maximum spacing. The uppermost and lowest centralizers shall be located a maximum of 3 ft (0.9 m) from the top and bottom of the micropile. Centralizers and spacers shall be securely attached to the reinforcement, sized to position the reinforcement within 1/2 in (12 mm) of plan location from center of pile, sized to allow grout tremie pipe insertion to the bottom of the drill-hole, and must be of sufficient size to allow grout to flow freely up the drill-hole, up the casing, and between adjacent reinforcing bars. The reinforcing steel shall be inserted into the drill-hole to the desired depth without difficulty. Partially inserted reinforcing bars shall not be driven or forced into the hole. The micropile Contractor shall re-drill and reinsert reinforcing steel when necessary in order to facilitate insertion.

Lengths of casing and reinforcing bars to be spliced shall be secured in proper alignment and in a manner that prevents eccentricity or an angle between the axes of the lengths to be spliced. Splices and threaded joints shall meet the requirements of the rebar material. Threaded pipe casing joints shall be located at least 2 casing diameters (OD) from a splice in any reinforcing bar. When multiple bars are used, bar splices shall be staggered at least 1 ft (0.3 m).

Micropiles shall be grouted on the same day that the load transfer bond length is drilled. The grouting equipment used shall be a colloidal grout plant and shall produce a grout free of lumps and undispersed cement. Paddle type mixers are not acceptable. The micropile Contractor shall have means and methods of measuring the grout quantity and pumping pressures during the grouting operations. The grout pump shall be equipped with a pressure gauge to monitor grout pressure. A second pressure gauge shall be placed at the point of injection into the pile top. The pressure gauge shall be capable of measuring pressures of at least 145 psi (1000 kPa) or 2 times the actual grout pressure used, whichever is greater. The grout shall be kept in agitation prior to mixing. Grout shall be placed within 1 hour of mixing. The grouting equipment shall be sized to enable each pile to be grouted in one continuous operation. The grout shall be injected from the lowest point of the drill-hole, and injection shall continue until uncontaminated grout flows from the top of the pile. The grout may be pumped through grout tubes, casing, hollow stem augers or drill rods. Temporary casing, if used, shall be extracted in stages so as to ensure that, after each length of casing is removed, the grout level is brought back up to the ground level before the next length is removed. The tremie pipe or casing shall always extend below the level of the existing grout in the drill-hole. The grout takes shall be controlled to prevent excessive heave or fracturing of rock or soil formations. Upon completion of grouting, the grout tube may remain in the hole, but must be filled with grout.

If the Contractor elects to use a post-grouting system, working drawings and details shall be submitted to the Engineer for review in accordance with 1.05.02.

Grout within the micropile verification and proof test piles shall attain the minimum required 3-day compressive strength prior to load testing. During production, micropile grout shall be tested by the Contractor for compressive strength in accordance with AASHTO T106/ASTM C109 at a frequency of no less than 1 set of 3 each 2 in (50 mm) grout cubes, or 3 in (75 mm) cylinders, from each grout plant each day of operation, or per every 10 micropiles, whichever occurs more frequently. The compressive strength shall be the average of the 3 cubes or cylinders tested.

Grout consistency as measured by grout density shall be determined by the micropile

Contractor per API RP-13B-1 at a frequency of at least 1 test per pile, conducted just prior to start of pile grouting. The Baroid Mud Balance used in accordance with API RP-13B-1 is an approved device for determining the grout density of neat cement grout.

Provide grout cube or cylinder compressive strength and grout density test results to the Engineer within 24 hours of testing.

7. **Micropile Installation Records:** The micropile Contractor shall prepare and submit to the Engineer full-length installation records for each micropile installed. The records shall be submitted within 1 work shift after that pile installation is completed. The data shall be recorded on a micropile installation log. A separate log shall be provided for each micropile.
8. **Verification and Proof Tests:** The Contractor shall perform verification and proof testing of piles at the locations specified on the plans, and perform compression load testing in accord with ASTM D1143 and tension load testing in accord with ASTM D3689, except as modified herein. If the Contractor designs micropiles using tip resistance, it shall use ASTM D1143 for verification and proof tests thereof.

The Contractor shall perform pre-production verification pile load test(s) to verify the design of the pile system and the construction methods proposed prior to installing any production piles. Sacrificial verification test pile(s) shall be constructed by the Contractor in conformance with the approved working drawings, and shall install verification test pile(s) at the location(s) shown on the plans or at location(s) approved by the Engineer.

Verification load test(s) shall be performed in order to verify that the micropiles installed by the Contractor will meet the compression and tensile load capacities and load test acceptance criteria, and to verify that the length of the micropile load transfer bond zone is adequate. The micropile verification load test results must verify the Contractor's design and installation methods.

The drilling method, grouting method, permanent casing length, micropile diameter (cased and uncased) and bond zone length for the verification test pile shall be identical to those specified for the production piles at the given locations. The verification test micropile structural steel sections shall be sized to safely resist the maximum test load.

The maximum verification and proof test loads applied to the micropile shall not exceed 80% of the structural capacity of the micropile structural elements, including steel yield in tension, steel yield or buckling in compression, or grout crushing in compression. Any required increase in strength of the verification and proof test pile elements above the strength required for the production piles shall be provided for in the Contractor's bid price.

Testing equipment used in connection with the micropiles shall include dial gauges, dial gauge independent reference frame, jack and pressure gauge, electronic load cell (with readout device), and a reaction frame. The load cell is required only for the creep test portion of the verification test. The Contractor shall provide a description of test setup and jack, pressure gauge and load cell calibration curves as outlined in the Submittals Section.

The Contractor shall design the testing reaction frame to be sufficiently rigid and of adequate dimensions to ensure that excessive deformation of the testing equipment does not occur; and must align the jack, bearing plates, and stressing anchorage so that unloading and repositioning of the equipment will not be required during the test.

The Contractor shall also apply and measure the test load with a hydraulic jack and pressure gauge. The pressure gauge shall be graduated in 100 psi (690 kPa) increments or less. The jack and pressure gauge shall have a pressure range not exceeding twice the anticipated maximum test pressure. Jack ram travel shall be sufficient to allow the test to be done without resetting the equipment. The Contractor shall monitor the creep-test-load-hold during verification tests with both the pressure gauge and the electronic load cell; and shall use the load cell in order to accurately maintain a constant load hold during the creep-test-load-hold increment of the verification test.

The Contractor shall measure the pile top movement with a dial gauge capable of

measuring to 0.001 in (0.025 mm). The dial gauge shall have a travel sufficient to allow the test to be done without having to reset the gauge; and the Contractor shall visually align the gauge to be parallel with the axis of the micropile and support the gauge independently from the jack, pile or reaction frame. The Contractor shall also use a minimum of 2 dial gauges when the test setup requires reaction against the ground or single reaction piles on each side of the test pile.

The Contractor shall test verification piles to the following loads: Alignment Load ("AL"), Maximum Service Limit Pile Load ("SVL") and the Ultimate Pile Capacity ("UPC"). The SVL and UPC loads are provided on the Contract drawings. The AL is the minimum load applied to the micropile during testing needed to keep the testing equipment correctly positioned. The AL shall not exceed 5% of the SVL. The verification pile load tests shall be made by incrementally loading the micropile in accordance with the cyclic load schedule shown in Table 7.06-1, for both compression and tension loading (test the compression prior to tension).

TABLE 7.06-1, Cyclic Load Schedule for Verification Pile Load Test

Step	Loading	Applied Load	Hold Time (minutes)
1	Apply AL	AL	2.5
2	Cycle 1	0.15 SVL	2.5
		0.30 SVL	2.5
		0.45 SVL	2.5
		0.60 SVL	2.5
		0.75 SVL	2.5
		0.90 SVL	2.5
		1.00 SVL	10 to 60 minutes
		0.60 SVL	2.5
		0.30 SVL	2.5
		AL	
3	Cycle 2	0.075 UPC	2.5
		0.150 UPC	2.5
		0.225 UPC	2.5
		0.300 UPC	2.5
		0.375 UPC	2.5
		0.450 UPC	2.5
		0.525 UPC	2.5
		0.600 UPC	2.5
		0.675 UPC	2.5
		0.750 UPC	2.5
		0.825 UPC	2.5
		0.900 UPC	2.5
		1.000 UPC	10 to 60 minutes
		0.750 UPC	2.5
		0.525 UPC	2.5
		0.225 UPC	2.5
		AL	

Pile-top movement shall be measured at each load increment. The load-hold period shall start as soon as each test load increment is applied. Pile movement during the 1.00 SVL and 1.000 UPC loads shall be measured and recorded at 1,2,3, 4, 5, 6, 10, 20, 30, 50, and 60 minutes. The alignment load shall not exceed 5% of the SVL. Dial gauges shall be reset to zero (0) after the initial AL is applied.

The acceptance criteria for micropile verification load test are:

(a) The Engineer shall determine the criteria for tolerable movement during the load test at the top of the micropile.

(b) At the end of the maximum test load increment for each cycle, test piles shall have a creep rate not exceeding 0.05 in (1.3 mm) /log cycle time (1 to 10 minutes) or 0.1 in (2.5 mm) /log cycle time (6 to 60 minutes or the last log cycle if held longer). The creep rate shall be linear or decreasing throughout the hold period.

(c) Failure does not occur at any load increment up to and including the maximum test load for each cycle. Failure is defined as load at which attempts to further increase the test load simply result in continued pile movement.

Upon completion of the test, the Contractor shall prepare and submit a report of the test results, stamped by a professional engineer, for review and acceptance by the Engineer prior to beginning installation of production micropiles. This report shall include written confirmation of the verification micropile's capacity.

If a verification tested micropile fails to meet the acceptance criteria, the Contractor shall modify the design, the construction procedure, or both. These modifications may include modifying the installation methods, increasing the bond length, or changing the micropile type. Any modification that necessitates changes of the structure shall be submitted as a revision to the working drawings and require the Engineer's review and acceptance. Any modifications of design or construction procedures or cost of additional verification test piles and load testing shall be at the Contractor's expense. At the completion of verification testing, the Contractor shall remove test piles down to the elevation specified by the Engineer.

The Contractor shall perform proof load tests at the micropile locations as shown on the plans, and shall perform proof-load tests on the first set of production piles installed at each designated substructure unit prior to the installation of the remaining production piles in that unit. The initial proof-test piles shall be installed at the locations shown on the plans. Upon completion of each test, the Contractor shall prepare and submit a report of the test results, stamped by a professional engineer, for review and acceptance by the Engineer

The Contractor shall test proof test piles to a maximum test load of 1.00 times the Maximum Strength Limit Pile Load (STL). The STL load is provided on the Contract drawings. Proof tests shall be made by incrementally loading the micropile as shown in Table 7.06-2, to be used for both compression and tension loading:

TABLE 7.06-2, Incremental Loading for Proof Test Piles

Step	Loading	Applied Load	Hold Time (minutes)
1	Apply AL		2.5
2	Cycle 1	0.15 STL	2.5
		0.30 STL	2.5
		0.45 STL	2.5
		0.60 STL	2.5
		0.75 STL	2.5
		0.90 STL	2.5
		1.00 STL	10 to 60 minutes
		0.60 STL	2.5
		0.30 STL	2.5
		AL	

Depending on performance, either a 10-minute or 60-minute creep test shall be performed at the 1.00 STL test load. Where the pile top movement between 1 and 10 minutes exceeds 0.039 in (1 mm), the Maximum Test Load shall be maintained an additional 50

minutes. Movements shall be recorded at 1, 2, 3, 5, 6, 10, 20, 30, 50 and 60 minutes. The alignment load shall not exceed 5% of STL. Dial gauges shall be reset to zero after the initial AL is applied.

The acceptance criteria for micropile proof load tests are:

(a) The Engineer shall determine the criteria for tolerable movement during the load test at the top of the micropile.

(b) At the end of the 1.00 STL test load increment, test piles shall have a creep rate not exceeding 0.05 in (1.3 mm) /log cycle time (1 to 10 minutes) or 0.1 in (2.5 mm) /log cycle time (6 to 60 minutes). The creep rate shall be linear or decreasing throughout the creep-load hold period.

(c) Failure does not occur at the 1.00 STL maximum test load. Failure is defined as the load at which attempts to further increase the test load simply result in continued pile movement.

If a proof-tested micropile fails to meet the acceptance criteria, the Contractor shall immediately proof test another micropile within that footing. For failed piles and further construction of other piles, the Contractor shall modify the design, the construction procedure, or both. These modifications may include installing replacement micropiles, incorporating piles at not more than 50% of the maximum load attained, post-grouting the tested pile and re-proof testing the pile, modifying installation methods, increasing the bond length, or changing the micropile type. Any modification that necessitates changes of the structure design shall require the Engineer's prior review and acceptance. Any modifications of design or construction procedures, or cost of additional verification test piles and verification or proof load testing, or replacement production micropiles, shall be at the Contractor's expense.

7.06.04—Method of Measurement:

1. **Micropiles** will be measured for payment by the number of micropiles installed and accepted. There will be no separate measurement or payment for furnishing the design of the micropiles or developing installation methods to meet these Specifications.
2. **Verification Test for Micropiles** will be measured for payment by the number of verification tests performed on sacrificial micropiles.
3. **Proof Test for Micropiles** will be measured for payment by the number of proof tests performed on production micropiles.
4. **Micropile Length Adjustment** will be measured for payment by the length in linear feet (meter) of the difference between the estimated length of permanent casing, as shown on the plans, and the actual length of permanent casing installed and accepted by the Engineer. (Note that the permanent casing length is measured from the bottom of the pile cap to the permanent casing tip, including the required embedment of casing into rock. Embedment into the pile cap will not be measured for payment because it is considered incidental to micropile construction. Any increase in casing length will be measured for payment to the Contractor, and any decrease in casing length will be measured for credit to the State.)

There will be no separate measurement or payment for mobilization and demobilization associated with this item.

7.06.05—Basis of Payment:

1. **Micropiles** will be paid for at the Contract unit price each for "Micropiles" complete and accepted in place, including all design, development of installation methods, materials, equipment, tools, proper disposal of drilling spoil and labor incidental thereto.
2. **Verification Test for Micropiles** will be paid for at the Contract unit price each for "Verification Test for Micropiles" completed on sacrificial micropiles, including all materials,

testing equipment, tools, test reports, removal of test piles and labor incidental thereto.

3. **Proof Test for Micropiles** will be paid for at the Contract unit price each for “Proof Test for Micropiles” completed on production micropiles, including all materials, testing equipment, tools, test reports and labor incidental thereto.
4. **Micropile Length Adjustment** will be paid for at the Contract unit price per linear foot (meter) for “Micropile Length Adjustment” complete and accepted, including all materials, equipment, tools, and labor incidental thereto.

Pay Item	Pay Unit
Micropiles	ea. (ea.)
Verification Test for Micropiles	ea. (ea.)
Proof Test for Micropiles	ea. (ea.)
Micropile Length Adjustment	l.f. (m)

CONNECTICUT
SUPPLEMENTAL SPECIFICATION
SECTION 7.16
TEMPORARY EARTH RETAINING SYSTEM

Add the following Section:

SECTION 7.16
TEMPORARY EARTH RETAINING SYSTEM

7.16.01—Description
7.16.02—Materials
7.16.03—Construction Methods
7.16.04—Method of Measurement
7.16.05—Basis of Payment

7.16.01—Description: Temporary earth retaining system shall be any type of adequately braced temporary retaining wall, such as temporary sheet piling, which the Contractor elects to build to satisfy, and which does satisfy, the condition that existing facilities be properly retained during excavation or fill for the placement of substructure or other facilities. The temporary earth retaining system shall be designed by the Contractor and constructed where shown on the plans. This system shall be removed upon completion of the permanent work, except that some sections may be left in place when so ordered by the Engineer.

7.16.02—Materials: Steel sheet piling shall meet the requirements of ASTM A328. Timber sheet piling shall meet the requirements of Subarticle M.09.01-1. Materials other than steel or timber, or a combination of these may be used provided they are properly designed for the purpose intended. Systems utilizing other material(s) shall meet the manufacturer's specifications and Project specifications. The parts list shall be furnished for the proprietary system and the Contractor shall provide material certificates for the parts

7.16.03—Construction Methods: The temporary earth retaining system shall be safely designed and shall be carried to adequate depths and braced as necessary for proper performance of the work. Construction shall be such as to permit excavation or fill as required. Interior dimensions shall be such as to give sufficient clearance for construction of forms and their inspection, and for battered pile clearance when necessary. Movements of the system or bracing which prevent the proper completion of the substructure shall be corrected at the sole expense of the Contractor. No part of the temporary earth retaining system or bracing shall be allowed to extend into the substructure without written permission of the Engineer.

Working drawings and design calculations for the temporary earth retaining system shall be submitted in accordance with the requirements of Article 1.05.02-2. The working drawings and design calculations shall be prepared, sealed, and signed by a Professional Engineer, licensed in the State of Connecticut. The furnishing of such plans shall not serve to relieve the Contractor of any part of its responsibility for the safety of the work or for the successful completion of the Project.

Unless otherwise ordered by the Engineer, all parts of the temporary earth retaining system shall be removed upon completion of the work for which it was provided. The excavation shall be backfilled and properly compacted, prior to removal of the system, unless otherwise permitted by the Engineer. The temporary earth retaining system may be left in place at the option of the Contractor if so permitted by the Engineer, provided that it is cut off at an elevation as directed by the Engineer and the cutoffs removed from the Site.

7.16.04—Method of Measurement: Temporary earth retaining system will be measured for payment by the number of square feet (square meters) of temporary earth retaining system completed and accepted, as computed from the horizontal and vertical payment limits shown on the plans or as ordered. If no payment limits are shown on the plans, the limits used for payment will be the actual horizontal limit of temporary earth retaining system installed and accepted, and the vertical limit as measured from the bottom of the exposed face of the wall system to the top of the retained earth behind the system. The measurement for temporary earth retaining system which is used as a common wall for staged construction will be the horizontal payment limit shown on the plans and the greater vertical dimension of the common wall face.

No measurement will be made of end extensions or returns necessary for the safety of the retained facility. Earth retaining system ordered left in place by the Engineer shall be measured in accordance with "Earth Retaining System Left in Place."

Earth retaining systems left in place solely at the Contractor's option, and with the Engineer's permission, will not have an additional payment.

7.16.05—Basis of Payment: Payment for this work will be made at the Contract unit price per square foot (square meters) for "Temporary Earth Retaining System" which price shall include all design, materials, equipment and labor incidental to the construction and removal of the temporary earth retaining system required at the locations specified on the plans; including removal of obstructions, repair and correction, adjustments or reconstruction required by the plans. Any common earth retaining system required for staged construction will be measured for payment only once.

Pay Item	Pay Unit
Temporary Earth Retaining System	s.f. (s.m)

CONNECTICUT
SUPPLEMENTAL SPECIFICATION
SECTION 7.17
EARTH RETAINING SYSTEM LEFT IN PLACE

Add the following Section:

SECTION 7.17
EARTH RETAINING SYSTEM LEFT IN PLACE

7.17.01—Description
7.17.02—Vacant
7.17.03—Construction Methods
7.17.04—Method of Measurement
7.17.05—Basis of Payment

7.17.01—Description: This specification covers only that portion of the temporary earth retaining system that may be ordered left in place by the Engineer or designated in the plans to be left in place.

7.17.02—Vacant

7.17.03—Construction Methods: The Contractor shall submit plans showing the proposed method of construction prior to the start of such construction to the Engineer for approval.

7.17.04—Method of Measurement: Earth retaining system material left in place will be measured for payment by the square foot (square meter). This area will be measured or computed from the horizontal and vertical payment limits shown on the plans or as ordered. If no payment limits are shown on the plans, the limits used for payment will be the actual horizontal limit of temporary earth retaining system ordered or designated in the plans to be left in place, and the vertical limit will correspond to the method of measurement of the temporary earth retaining system.

Temporary earth retaining system left in place solely at the Contractor's option, and with the Engineer's permission, will not be measured for payment.

7.17.05—Basis of Payment: Payment for this work will be made as follows:

That portion of the temporary earth retaining system ordered or designated in the plans to be left in place will be paid for at the Contract unit price per square foot (square meter) for "Earth Retaining System Left in Place" applying to one or more structures or portions of structures, which price shall include only the cost of material left in place. All other expenses shall be paid for under the item "Temporary Earth Retaining System."

Pay Item	Pay Unit
Earth Retaining System Left in Place	s.f. (s.m)

CONNECTICUT
SUPPLEMENTAL SPECIFICATION
SECTION 7.25
BAGGED STONE

Delete the entire section.

CONNECTICUT
SUPPLEMENTAL SPECIFICATION
SECTION 8.11
CONCRETE CURBING

Delete the entire section and replace it with the following:

SECTION 8.11
CONCRETE CURBING

8.11.01—Description
8.11.02—Materials
8.11.03—Construction Methods
8.11.04—Method of Measurement
8.11.05—Basis of Payment

8.11.01—Description: This item shall consist of concrete curbing, furnished in accordance with the dimensions and details of the plans, and installed to the lines and grades shown on the plans.

8.11.02—Materials: The concrete for cast-in-place curbing shall be Class "F" concrete meeting the pertinent requirements of Section M.03.

Precast curb shall meet the requirements of Subarticle M.08.02-4.

Joint filler shall meet the requirements of Subarticle M.03.08-2.

If required, base material shall meet the requirements of Section M.02.

8.11.03—Construction Methods: Construction methods for concrete curbing shall meet the requirements of Article 6.01.03, as supplemented by the following:

1. Excavation: Excavation shall be made to the required depth, and the base upon which the curbing is to be set shall be compacted to a firm, even surface.
2. Section Lengths: All curbing sections shall have uniform length of approximately 10 ft (3 m), unless otherwise directed. The length of straight curb sections may be varied slightly where necessary for closures, but no section less than 6 ft (2 m) long will be permitted.

   Curbing set on a radius of 100 ft (30 m) or less shall be constructed in accordance with the details on the plans.
3. Cast-In-Place Curbing**:** Concrete shall be placed in clean forms on a moist, firm, unfrozen base.

   The concrete shall be placed and finished to a smooth, even surface.

   As an exception to Article 6.01.03, where forms are used, they shall be so constructed that the form for exposed faces may be removed before the concrete has taken final set in order to permit finishing.
4. Precast Concrete Curbing: A mound of concrete, as shown on the plans, shall be placed at all joints.
5. Backfilling: The grading shall be completed to the lines shown on the plans, or as ordered, by refilling to the required elevation with approved material which shall be placed in layers of not over 6 in (150 mm) deep and shall be thoroughly compacted.
6. Openings: Where indicated on the plans, or directed, openings shall be made through the curbing at the elevations and of the size required.

8.11.04—Method of Measurement: This work will be measured for payment along the top of the curb and will be the actual number of linear feet (meters) of concrete curbing completed and accepted.

8.11.05—Basis of Payment: Payment for this work will be made at the Contract unit price per linear foot (meter) for "Concrete Curbing" of the type specified, complete in place, which price shall include all materials, equipment, tools and labor incidental thereto; the unit price shall also include all excavation, backfilling, disposal of surplus material and openings related to this item.

There will be no direct payment for furnishing, placing and compacting base material, but the cost of this work shall be considered as included in the general cost of the work.

Pay Item	Pay Unit
Concrete Curbing (Type)	l.f. (m)

CONNECTICUT
SUPPLEMENTAL SPECIFICATION
SECTION 8.13
STONE CURBING

Delete the entire section and replace it with the following:

SECTION 8.13
STONE CURBING

8.13.01—Description
8.13.02—Materials
8.13.03—Construction Methods
8.13.04—Method of Measurement
8.13.05—Basis of Payment

8.13.01—Description: This item shall consist of stone curbing, furnished in accordance with the dimensions and details of the plans, and installed to the lines and grades shown on the plans.

8.13.02—Materials: The stone curbing shall meet the requirements of Article M.12.06.

Mortar shall meet the requirements of Article M.11.04.

If required, base material shall meet the requirements of Section M.02.

8.13.03—Construction Methods:

1. Excavation: Excavation shall be made to the required depth and the base upon which the curbing is to be set shall be compacted to a firm, even surface.
2. Installing Stone Curbing: The curbing shall be set on edge and settled into place to the line and grade required, straight and true for the full depth. A mound of concrete, as shown on the plans, shall be placed at all joints. The joints of the stone curbing shall be pointed with mortar for the full depth of the curbing. At approximately 50-ft (15 m) intervals, a 1/2-in (12 mm) joint shall not be filled with mortar but left free for expansion. The ends of the stone curbing at driveways and intersections shall be cut at a bevel or rounded, as directed by the Engineer.
3. Backfilling: The grading shall be completed to the lines shown on the plans, or as ordered, by refilling to the required elevation with approved material which shall be placed in layers of not over 6 in (150 mm) in depth and thoroughly compacted.
4. Openings: Where indicated on the plans, or directed, openings shall be made through the curbing at the elevations and of the size required

8.13.04—Method of Measurement: This work will be measured for payment along the top of the curb and will be the actual number of linear feet (meters) of stone curbing or curved stone curbing installed and accepted.

Curbing set on a radius of 100 ft (30 m) or less will be measured for payment as “Curved Stone Curbing.”

8.13.05—Basis of Payment: Payment for this work will be made at the Contract unit price per linear foot (meter) for "Stone Curbing" or "Curved Stone Curbing," of the type, size and kind specified, complete and accepted in place, which price shall include all materials, equipment, tools and labor incidental thereto, and all excavation, backfilling,

disposal of surplus material and all openings.

There will be no direct payment for furnishing, placing and compacting base material, beveling or rounding the ends of the curbing and pointing the joints with mortar, but the cost of this work shall be considered as included in the general cost of the work.

Pay Item	Pay Unit
Stone Curbing (Type-Size)	l.f. (m)
Curved Stone Curbing	l.f. (m)

CONNECTICUT
SUPPLEMENTAL SPECIFICATION
SECTION 8.22
TEMPORARY PRECAST CONCRETE BARRIER CURB

8.22.02—Materials:

In the second sentence of the third paragraph, change “reflective” *to* “retroreflective.”

8.22.04—Method of Measurement:

Add the following sentence to the end of the second paragraph:

“ Relocation of Temporary Precast Concrete Barrier Curb for access to the work area or for the convenience of the Contractor shall be considered incidental to Maintenance and Protection of Traffic and will not be measured for payment.”

CONNECTICUT
SUPPLEMENTAL SPECIFICATION
SECTION 9.07
BARWAYS

Delete the entire article.

CONNECTICUT
SUPPLEMENTAL SPECIFICATION
SECTION 9.10
METAL BEAM RAIL

9.10.02—Materials:

Change Subarticles 1 and 2 as follows:

“ 1. Chemical anchoring material shall meet the requirements of Article M.03.07.
2. Metal beam rail delineators shall meet the requirements of Article M.18.09 and Article M.18.13.”

9.10.04—Method of Measurement:

1. Metal Beam Rail (Type):

Delete the only sentence and replace with the following:

“ The length of metal beam rail measured for payment will be the number of linear feet (meters) of accepted rail of the type or designation installed, including radius rail other than Curved Guide Rail Treatment, measured along the top of rail between centers of end posts in each continuous section.”

CONNECTICUT
SUPPLEMENTAL SPECIFICATION
SECTION 9.18
THREE CABLE GUIDE RAILING
(I-BEAM POSTS) AND ANCHORAGES

9.18.02—Materials:

In the second sentence of the only paragraph, change “reflective” *to* “retroreflective.”

9.18.03 – Construction Methods:

In the 10th paragraph, replace “MIL” *with* “MILSPEC.”

CONNECTICUT
SUPPLEMENTAL SPECIFICATION
SECTION 9.21
CONCRETE SIDEWALKS

Delete the entire Section and replace it with the following:

SECTION 9.21
CONCRETE SIDEWALKS AND RAMPS

9.21.01—Description
9.21.02—Materials
9.21.03—Construction Methods
9.21.04—Method of Measurement
9.21.05—Basis of Payment

9.21.01—Description: This item shall consist of concrete sidewalks and ramps constructed on a gravel or reclaimed miscellaneous aggregate base course in the locations and to the dimensions and details shown on the plans or as ordered and in accordance with these specifications.

9.21.02—Materials: Materials for this work shall conform to the requirements of Section M.03 for Class “F” Concrete.

Gravel or reclaimed miscellaneous aggregate for base shall conform to Article M.02.01 for granular fill.

Detectable warning strips shall be prefabricated detectable warning tile chosen from the Department’s Qualified Products List for retrofit or cast in place applications.

9.21.03—Construction Methods:

1. **Excavation:** Excavation, including removal of any existing sidewalk (bituminous or concrete) and curbing, shall be made to the required depths below the finished grade, as shown on the plans or as directed. All soft and yielding material shall be removed and replaced with suitable material.

When connecting new concrete sidewalk to a section of existing concrete sidewalk, the connection point shall be at the nearest joint in the existing sidewalk.

The Contractor shall establish the limits required to achieve grades for each ramp prior to removal of existing sidewalk and ramps. The Contractor shall document and notify the Engineer of any control points that may conflict with the design grades or configuration of ramps shown on the plans. Control points can be but are not limited to ROW, utility poles, drainage structures, buildings, fences, walls or other features found near the proposed ramp. When control points are encountered within the limits of the ramp, the Engineer will determine if an alternative ramp type is required or the ramp is to be constructed as shown on the plans.

2. **Gravel or Reclaimed Miscellaneous Aggregate Base:** The gravel or reclaimed miscellaneous aggregate base shall be placed in layers not to exceed 6 inches (150 millimeters) in depth and to such a depth that after compaction it shall be at the

specified depth below the finished grade of the walk. The base shall be wetted and rolled or tamped after the spreading of each layer.

3. Forms: Forms shall be of metal or wood, straight, free from warp and of sufficient strength to resist springing from the pressure of the concrete. If made of wood, they shall be of 2-inch (38-millimeter) surfaced plank except that at sharp curves thinner material may be used. If made of metal, they shall be of an approved section and have a flat surface on the top. Forms shall be of a depth equal to the depth of the sidewalk. Forms shall be securely staked, braced and held firmly to the required line and grade and shall be sufficiently tight to prevent leakage of mortar. All forms shall be cleaned and oiled or wetted before concrete is placed against them. Sheet metal templates 1/8 inch (3 millimeters) in thickness, of the full depth and width of the walk, shall be spaced at intervals of 12 feet (4 meters) or as directed. If the concrete is placed in alternate sections, these templates shall remain in place until concrete has been placed on both sides of the template. As soon as the concrete has obtained its initial set, the templates shall be removed.

4. Concrete: The concrete shall be proportioned, mixed, placed, etc., in accordance with the provisions of Section 6.01 for Class “F” Concrete. Concrete shall be cured in accordance with the provisions of Article 4.01.03 for Concrete Pavement.

5. Finishing: The surface of the concrete shall be finished with a wood float or by other approved means. The outside edges of the slab and all joints shall be edged with a 1/4-inch (6-millimeter) radius edging tool. Each slab shall be divided into 2 or more sections by forming dummy joints with a jointing tool as directed.

6. Backfilling and Removal of Surplus Material: The sides of the sidewalk shall be backfilled with suitable material thoroughly compacted and finished flush with the top of the sidewalk. All surplus material shall be removed and the site left in a neat and presentable condition to the satisfaction of the Engineer.

7. Detectable Warning Strip: The detectable warning strip for new construction shall be set directly in poured concrete and each tile shall be weighted down to prevent the tile from floating after placement in wet concrete in accordance with curing procedures. Install detectable warning strip, according to the plans and the Manufacturer’s specifications, or as directed by the Engineer.

The detectable warning strip for retrofit construction shall be installed according to the plans in the direction of pedestrian route and contained wholly within painted crosswalk when present. Its installation shall conform to all manufacturer’s requirements.

9.21.04—Method of Measurement: This work will be measured for payment as follows:

1. Concrete Sidewalk or Sidewalk Ramp: This work will be measured by the actual number of square feet (square meters) of completed and accepted concrete sidewalk or ramp.

2. Excavation: Excavation below the finished grade of the sidewalk or ramp, backfilling, and disposal of surplus material will not be measured for payment, but the cost shall be included in the price bid for the sidewalk or ramp. Excavation above the finished grade of the sidewalk or ramp will be measured and paid for in accordance with Section 2.02

3. Gravel or Reclaimed Miscellaneous Aggregate Base: This work will not be measured for payment, but the cost shall be considered as included in the price bid for the sidewalk or ramp.

4. **Detectable Warning Strip:** For new construction (cast in place), the detectable warning strip will be measured for payment by the actual number of each ramp where a detectable warning strip has been installed and accepted regardless of the number of tiles installed.

5. **Retrofit Detectable Warning Strip:** For retrofit construction (surface applied), the detectable warning strip will be measured for payment by the actual number of each ramp where a detectable warning strip has been installed and accepted regardless of the number of tiles installed.

6. **Construction Staking:** The establishment of control points and limits of grading will be measured in accordance with the item Construction Staking.

9.21.05—Basis of Payment: Construction of a concrete sidewalk or ramp will be paid for at the Contract unit price per square foot (square meter) for "Concrete Sidewalk," or “Concrete Sidewalk Ramp” complete in place, which price shall include all excavation as specified above, backfill, disposal of surplus material, curb removal and any monolithic or separately cast sidewalk curb when required for the sidewalk ramp as shown on the plans, gravel or reclaimed miscellaneous aggregate base, equipment, tools, materials and labor incidental thereto.

A new detectable warning strip will be paid for at the Contract unit price for each ramp where the detectable warning strip has been installed complete in place. This price shall include all tiles, materials, equipment, tools and labor incidental thereto.

Retrofitting the existing concrete sidewalk with a detectable warning strip will be paid for at the Contract unit price for each ramp where the retrofit detectable warning strip has been installed complete in place. This price will include all tiles, saw cutting concrete, adhesive, drilling holes for fasteners, materials, equipment, tools and labor incidental there to.

The establishment of control points and limits of grading will be paid for in accordance with the item Construction Staking.

Pay Item	Pay Unit
Concrete Sidewalk	s.f. (s.m)
Concrete Sidewalk Ramp	s.f. (s.m)
Detectable Warning Strip	ea. (ea.)
Retrofit Detectable Warning Strip	ea. (ea.)

CONNECTICUT
SUPPLEMENTAL SPECIFICATION
SECTION 9.22
BITUMINOUS CONCRETE SIDEWALK
BITUMINOUS CONCRETE DRIVEWAY

9.22.03—Construction Methods:

Replace the first paragraph with the following:

“ **1. Excavation:** Excavation, including saw cutting, removal of any existing sidewalk, or driveway, shall be made to the required depth below the finished grade, as shown on the plans or as directed by the Engineer. All soft and yielding material shall be removed and replaced with suitable material.”

9.22.05—Basis of Payment:

Replace the only paragraph with the following:

“ This work will be paid for at the contract unit price per square yard (square meter) for "Bituminous Concrete Sidewalk" or "Bituminous Concrete Driveway," as the case may be, complete in place, which price shall include all saw cutting, excavation as specified above, backfill, disposal of surplus material, gravel or reclaimed miscellaneous aggregate base, and all equipment, tools, labor and materials incidental thereto.”

CONNECTICUT
SUPPLEMENTAL SPECIFICATION
SECTION 9.41
SERVICE BRIDGES

Delete the entire article.

CONNECTICUT
SUPPLEMENTAL SPECIFICATION
SECTION 9.44
TOPSOIL

9.44.03—Construction Methods:

Replace the first paragraph with the following:

"The Contractor shall submit to the Engineer a Certified Test Report at least 15 calendar days prior to delivery. Any material delivered to the Project, which does not meet specifications or which has become mixed with undue amounts of subsoil during any operation at the source or during placing and spreading, will be rejected and shall be replaced by the Contractor with acceptable material. Any material that is delivered to the Project which does not meet the proper pH requirements for that soil, as specified in Section M.13, must be corrected during spreading."

In the second and third paragraphs, replace "the topsoiled area" *with* "the finished area(s)."

9.44.05—Basis of Payment:

Delete the following:

"Payment for this work will be made as follows:

1. **Furnishing and Placing Topsoil: "**

CONNECTICUT
SUPPLEMENTAL SPECIFICATION
SECTION 9.45
WILDFLOWER ESTABLISHMENT

Delete the entire article.

CONNECTICUT
SUPPLEMENTAL SPECIFICATION
SECTION 9.49
FURNISHING, PLANTING and MULCHING
TREES, SHRUBS, VINES and GROUND COVER PLANTS

9.49.03—Construction Methods:

After the first paragraph under Subarticle "1. Planting Season" *replace the next four paragraphs with the following:*

"**Deciduous Material**
Spring: March 1st to May 31 except for balled and burlapped material, the planting of which will terminate on June 15th.
Fall: From October 15th until the ground freezes. Such plant items, as may be designated elsewhere in the Contract, shall be planted in the Spring planting season only.
Evergreen Material
Spring: March 1st to June 30th.
Fall: August 15th to October 31st."

Change the first two sentences of Subarticle "3. Layout" *as follows:*

" **Layout:** Plant material locations and bed outlines will be staked on the Project Site by the Engineer-Designer or designee in the presence of the Contractor, or the Contractor's representative, before any plant pits or beds are excavated. The Contractor shall request the staking of the plant layout at least 48 hours, excluding weekends and holidays, prior to the date desired to have the layout staked."

Replace Subarticle "5. Pits" *with the following:*

"**5. Pits:** The pit diameters shall be twice the diameter of the root-spread or container diameters, and shall be 2 in (50 mm) less than the height of the rootball measured from the bottom of the ball to the root collar. (i. e. A 12 in (300 mm) measurement between the root collar and the bottom of the rootball will require a 10 in (250 mm) deep pit). Any excavation in excess of that required shall be replaced with planting soil and compacted to the satisfaction of the Engineer."

Add the following sentence to Subarticle "6. Obstructions Below Ground:"

"If removal of obstructions results in a deeper hole than needed for planting, backfill material shall be added and compacted to the satisfaction of the Engineer."

Replace Subarticle "7. Preparation of Backfill" *with the following:*

"**7. Backfill:** Backfill shall meet the requirements of M.13.01 for Planting Soil."

Replace Subarticle "8. Setting Plants" *with the following:*

"**8. Setting Plants:** All plants shall be plumb and at a level that is 2-in (50 mm) higher than the surrounding ground. Backfill material for all plants shall be thoroughly and properly settled by firming or tamping. Thorough watering shall accompany backfilling. Saucers capable of holding water shall be formed at individual plants (exclusive of plant beds) by placing ridges of planting soil around each, or as directed by the Engineer.

a. Balled and Burlapped plants: Plants shall be handled in such manner so that the soil will not be loosened from the roots inside of the ball until the plant is in its final position. If wire baskets are used, the Contractor shall cut all of the horizontal wires in the top 2/3 of the root ball and bend down or remove the top 1/3 of the wire basket so new roots can grow unobstructed in a horizontal direction. Carefully place the plant into the prepared pits and backfill with planting soil to 1/2 the depth of the pit, thoroughly tamp to the satisfaction of the Engineer around the ball. Fill the remaining area of the pit with water. Once water has completely drained, loosen and remove the top 1/3 of the burlap. Remove excess soil to expose the root structure, and cut away any small feeder or girdling roots. Roots that have been wrapped around the ball within the burlap shall be straightened and the remainder of the pit filled with planting soil tamped to ensure that no air pockets remain.

b. Container Grown Plants: Carefully remove the plant from the container over the prepared pits. Gently loosen the soil and straighten all roots as naturally as possible. Place into the bottom of the pit. Backfill with planting soil to 1/2 the depth of the pit. Thoroughly tamp to the satisfaction of the Engineer. Fill remaining area of the pit with water. Once water has completely drained fill the remainder of the pit with planting soil tamped to ensure that no air pockets remain.

c. Bare-roots Plants: Carefully spread roots as naturally as possible and place into the bottom of the pit. All broken or frayed roots shall be cleanly cut off. Backfill with planting soil to 1/2 the depth of the pit. Thoroughly tamp to the satisfaction of the Engineer. Fill remaining area of the pit with water. Once water has completely drained fill the remainder of the pit with planting soil tamped to ensure that no air pockets remain."

Replace Subarticle "10. Watering" *with the following:*

"**10. Watering:** All plants shall be watered upon setting and as many times thereafter as conditions warrant.

The following is a guide for minimum requirements:

Trees:

2 ½" Caliper and less – Fifteen (15) gallons each.
3" to 5" Caliper – Twenty (20) gallons each.
5 ½" Caliper and above – Twenty-five (25) gallons each.

Shrubs:

24" and less – Six (6) gallons each.
More than 24"- Ten (10) gallons each.

Vines, Perennials, and Ornamental Grasses – Three (3) gallons each.
Groundcovers and Bulbs – Two (2) gallons per square foot.

Water shall be applied at a controlled rate and in such a manner to ensure that the water reaches the root zone (saucer) of the plant or plant bed and does not run off to adjacent areas. Watering shall be applied in a manner that does not dislodge plants, erode soil or mulch, or cause damage to saucer.

The Contractor may use slow-release, drip irrigation bags for watering in accordance with manufacturer's instructions. The use of these portable/temporary irrigation bags will require the approval of the Engineer.

Overhead hydro-seeder spray nozzles shall not be used as watering devices."

Replace Subarticle "17. Establishment Period" *with the following:*

"**17. One-Year Establishment Period:** All plant material shall be subject to a One-Year Establishment Period. During this time, the Contractor shall use currently accepted horticultural practices to keep all plant material installed in a healthy, vigorous growing condition at the date of final acceptance. The date of final acceptance shall be 1 full calendar year following the satisfactory completion of the planting activities as confirmed by the Engineer.

An inspection will be held 1 year from the date of installation with the Contractor, Engineer, and Landscape Designer to determine the acceptability of the plant establishment. An inventory of losses and rejected materials will be made and corrective and necessary clean up measures will be determined at the plant inspection."

CONNECTICUT
SUPPLEMENTAL SPECIFICATION
SECTION 9.50
TURF ESTABLISHMENT

Change the title of the Section as follows:

SECTION 9.50
TURF ESTABLISHMENT
EROSION CONTROL MATTING

9.50.01—Description:

Replace the last sentence with the following:

" The work shall also include the installation of erosion control matting, as shown on the plans or where designated by the Engineer, consisting of mulch and netting woven together as a unit."

9.50.02—Materials:

Replace the entire article with the following:

" **9.50.02 – Materials:** Seed shall meet the requirements of Article M.13.04.
Fertilizer shall meet the requirements of Article M.13.03.
Mulch shall meet the requirements of Article M.13.05.
Erosion control matting, if required, shall be from the Department's Qualified Products List and shall meet the requirements of Article M.13.09."

9.50.03—Construction Methods:
1. Preparation of the Seedbed:

After the first sentence in Subarticle (a) "Level areas, medians, interchanges and lawns," *add the following sentence:*

" All disturbed soil areas at final grade shall be seeded within 7 days, or as directed by the Engineer, in accordance with these specifications."

Replace the entire paragraph of Subarticle (b) "Slope and Embankment Areas" *with the following:*

" These areas shall be made friable and receptive to seeding by disking or by other approved methods which will not disrupt the line and grade of the slope surface. In no event will seeding be permitted on hard or crusted soil surface."

2. Seeding Season:

Replace the entire Subarticle with the following:

“ The optimal calendar dates for seeding are:
Spring—March 15 to June 30
Fall—August 15 to October 30
All disturbed soil areas at final grade shall be seeded within 7 days, in accordance with these specifications.
Any seeding outside the optimal dates shall be performed in the same manner. Since acceptable turf establishment is less likely, the Contractor shall be responsible for reseeding until the turf stand conforms to 9.50.03-5.
Any reseeding shall be at no additional cost to the State.”

3. Seeding Methods:

Replace the entire Subarticle with the following:

“ The grass seed mixture shall be applied by any agronomically acceptable procedure. The rate of application shall be no less than 175 lb./ac (195 kg/hectare).
Fertilizer shall be initially applied at a rate of 320 lb./ac (360 kg/hectare) during or preceding seeding. When wood fiber mulch is used, it shall be applied in water slurry at a rate of 2,000 lb./ac (2250 kg/hectare) with or immediately after the application of seed, fertilizer and limestone (if required). When the grass seeding growth has attained a height of 6 in (150 mm), the specified areas designated herein shall be mowed to a height of 3 in (75 mm). Following mowing, all seeding grass areas (mowed and un-mowed) shall receive a uniform application of fertilizer hydraulically placed at the rate of 320 lb./ac (360 kg/hectare).”

4. Compaction:

*Replace the Subarticle heading “***Compaction:”** *with* **“Disturbance:”**

Replace the last sentence with the following:

“ Where any disturbance has occurred, the Contractor shall rework the soil to make a suitable seedbed; then re-seed and mulch such areas with the full amounts of the specified materials, at no additional cost to the State.”

5. Stand of Perennial Turf Grasses:

Replace the entire Subarticle with the following:

“ The Contractor shall provide and maintain a uniform stand of established turf grass species having attained a height of 6 in (150 mm) consisting of no less than 60% coverage per square foot throughout the seeded areas until the entire Project has been accepted. Reseeding required to achieve and maintain a uniform stand of established turf grass species shall be at no additional cost to the State.”

6. Establishment:

Replace the first paragraph of the Subarticle with the following:

“ The Contractor shall keep all seeded areas free from weeds and debris, such as stones, cables, baling wire, and may be required to mow at its own expense, on a 1-time-only basis, all slopes 4:1 or less (flatter) and level turf established (seeded) areas to a height of 4 in (75 mm) when the grass growth attains a height of 6 in (150 mm), or as directed by the Engineer.

7. Erosion Control Matting:

Replace the first sentence of the Subarticle with the following sentence:

“ Erosion control matting shall be installed following seeding where called for on the plans or as directed by the Engineer. Staples shall be installed as per manufacturer's recommendations. Where 2 lengths of matting are joined, the end of the up-grade strip shall overlap the down-grade strip per the manufacturer’s recommendations.”

9.50.04—Method of Measurement:

In the first paragraph, change the first sentence as follows:

“ This work will be measured for payment by the number of square yards (square meters) of surface area of accepted established perennial turf grass.”

9.50.05—Basis of Payment:

In the second paragraph, change “Erosion Control Matting” *to* “Erosion Control Matting (Type).”

In the Pay Item – Pay Unit table, change “Erosion Control Matting” *to* “Erosion Control Matting (Type).”

CONNECTICUT
SUPPLEMENTAL SPECIFICATION
SECTION 9.70
TRAFFICPERSON

Delete the entire Section and replace it with the following:

SECTION 9.70
TRAFFICPERSON

9.70.01—Description
9.70.02—Vacant
9.70.03—Construction Methods
9.70.04—Method of Measurement
9.70.05—Basis of Payment

9.70.01—Description: Under this item the Contractor shall provide the services of Trafficpersons of the type and number, and for such periods, as the Engineer approves for the control and direction of vehicular and pedestrian traffic in areas affected by Project operations. Trafficpersons' services which have not been requested or approved by the Engineer, but which have been obtained by the Contractor solely to meet its operational plans or needs, will not be approved for payment.

9.70.02—Vacant

9.70.03—Construction Methods: Prior to the start of Project operations which require the use of Trafficpersons, a meeting will be held with the Contractor, the Engineer, any relevant Trafficperson agency or firm, and, if applicable, State Police, to review Trafficperson operations, lines of responsibility, and operating guidelines for the Project. The Contractor shall provide a copy of each pertinent municipality's billing rates for Municipal Police Officers and their vehicles, as applicable, to the Engineer prior to the start of Project construction.

On a weekly basis, the Contractor shall inform the Engineer of its scheduled operations for the following week and the number of Trafficpersons it proposes to use for those operations. The Engineer will review the proposal and, if it is acceptable to him, approve the type and number of Trafficpersons to be used. In the event of an unplanned, emergency, or short-term operation, the Engineer may approve the temporary use of properly-clothed persons for traffic control until such time as an authorized Trafficperson may be obtained for that work. In no case shall such temporary use exceed 8 hours for any particular operation.

If the Contractor changes or cancels any scheduled operation without any prior notice of same as may be required by the agency providing the Trafficpersons, the Contractor will be responsible for payment, at no cost to the Department, of any show-up cost charged by said agency for affected Trafficpersons who would have been used if not for the pertinent change or cancellation. Exceptions, as approved by the Engineer, may be granted for adverse weather conditions and unforeseeable causes beyond the control, and not involving the fault or negligence, of the Contractor.

Trafficpersons assigned to a work Site shall take direction only from the Engineer.

Trafficpersons shall wear a high-visibility safety garment compliant with OSHA, MUTCD, and ASTM Standards; and the safety garment shall have the words "Traffic

Control" printed and clearly visible on the front and rear panels (minimum letter size 2 in) of the garment. Worn or faded safety garments that are no longer highly visible shall not be used. At the direction of the Engineer, the Contractor must replace any such garments at no cost to the State.

A Trafficperson shall assist in implementing the traffic control as specified in the item “Maintenance and Protection of Traffic” contained elsewhere in the Contract, or as otherwise directed by the Engineer. Any use of a Trafficperson for Project operations in a manner that conflicts with requirements of the Maintenance and Protection of Traffic specification must have been authorized in writing by the Engineer.

Trafficpersons shall consist of the following types:

1. Municipal Police Officers: Uniformed Municipal Police Officers shall be sworn Municipal Police Officers or Uniformed Constables employed by the Municipality in which the Project is located, who perform criminal law enforcement duties for the Municipality. Law enforcement personnel shall wear the high-visibility safety garment provided by their law enforcement agency. If no high-visibility safety garment is provided by said agency, the Contractor shall provide the law enforcement personnel with a garment meeting the requirements stated below for a Uniformed Flagger’s garment.

Law Enforcement Personnel may also be used for conducting motor vehicle enforcement operations in and around work areas as directed or approved by the Engineer.

Their services will also include their use of an official Municipal Police vehicle when so requested by the Engineer. Uniformed Municipal Police Officers must not be used on limited access highways. If Uniformed Municipal Police Officers are unavailable for a given Project task, other Trafficpersons may be used if so authorized in writing by the Engineer. Uniformed Municipal Police Officers and requested Municipal Police vehicles will be used at such locations and for such periods as the Engineer deems necessary for the control of traffic operations and for the safety of motorists passing through sites affected by Project operations.

2. Uniformed Flagger: Uniformed Flaggers shall be persons who have successfully completed flagger training by the American Traffic Safety Services Association (ATSSA), National Safety Council (NSC), or other such training approved by the Engineer. A copy of the Flagger’s training certificate shall be provided to the Engineer before the Flagger performs any Project work. The credentials and conduct of Uniformed Flaggers shall comply with the requirements of Chapter 6E, Flagger Control in the Manual of Uniformed Traffic Control Devices (MUTCD). Uniformed Flaggers shall wear high-visibility safety apparel and use a STOP/SLOW paddle that is at least 18 in (450 mm) wide with letters at least 6 in (150 mm) high. The paddle shall be mounted on a pole of sufficient length to be 6 ft (1.8 m) above the ground as measured from the bottom of the sign. Uniformed Flaggers shall be used only on non-limited access highways for the purpose of controlling traffic operations and only when authorized to do so in writing by the Engineer.

9.70.04—Method of Measurement: Services of Trafficpersons will be measured for payment by the actual number of hours for each person rendering services approved by the Engineer. These services shall include only such Trafficpersons as are employed within the limits of construction, right of way of the Project, or along detours authorized by the Engineer in order to assist public travel through areas affected by Project construction. Trafficperson services employed due to use of a detour or bypass beyond the limitations approved by the Engineer, or in connection with movement of construction vehicles or equipment, or at locations where traffic has been unnecessarily restricted by the Contractor’s method of operation, will not be measured for payment.

Trafficpersons shall not work more than 12 hours in any one 24-hour period. If such services are essential for more than 12 hours in such period, for a use approved by the Engineer, additional Trafficpersons engaged by the Contractor to meet that circumstance shall be measured for payment. If a Trafficperson used with the Engineer's authorization is an employee on the Contractor's payroll, payment under the item "Trafficperson (Uniformed Flagger)" will be made only for those hours when said employee is performing Trafficperson services.

No travel time will be measured for payment for Uniformed Municipal Police Officers or Uniformed Flaggers.

Mileage fees associated with Trafficperson services will not be measured for payment.

Safety garments and STOP/SLOW paddles will not be measured for payment.

9.70.05—Basis of Payment: Trafficpersons will be paid in accordance with the schedule described herein.

There will be no direct payment for safety garments or STOP/SLOW paddles. All costs associated with furnishing safety garments and STOP/SLOW paddles will be considered included in the general cost of the item.

1. Uniformed Law Enforcement Personnel: The sum of money for this item shown on the Estimate and in the itemized proposal as "Estimated Cost" for this work will be considered the bid price, even though payment will be made as described below. The estimated cost figure is not to be altered in any manner by the bidder. Should the bidder alter the amount shown, the altered figures will be disregarded and the original price will be used in determining the total amount for the Contract.

The Department will pay the Contractor its actual costs for "Trafficperson (Municipal Police Officer)" plus an additional 5% as reimbursement for the Contractor's administrative expense in connection with the services provided. The 5% markup will be paid when the Engineer receives from the Contractor cancelled check(s) or receipted invoice(s) as proof of its pertinent payments.

The invoice must include a breakdown of each officer's actual hours of work and actual rate applied. Mileage fees associated with Trafficperson services are not reimbursable expenses and are not to be included in the billing invoice. The use of a Municipal police vehicle authorized by the Engineer will be paid at the actual rate charged by the Municipality. Upon receipt of the invoice from the Municipality, the Contractor shall forward a copy of it to the Engineer. No payment on such an invoice will be made until and unless the Engineer has reviewed the invoice and approved the payment. The rate charged by the Municipality for use of a Uniformed Municipal Police Officer or a Municipal police vehicle shall not be greater than the rate that the Municipality normally charges others for similar services.

2. Uniformed Flagger: Uniformed Flaggers will be paid for at the Contract unit price per hour for "Trafficperson (Uniformed Flagger)," which price shall include all compensation, insurance benefits and any other cost or liability incidental to the furnishing of the Trafficperson services authorized under the Contract or approved by the Engineer.

Pay Item	Pay Unit
Trafficperson (Municipal Police Officer)	est.
Trafficperson (Uniformed Flagger)	hr.

CONNECTICUT
SUPPLEMENTAL SPECIFICATION
SECTION 9.73
SAFETY PATROL SERVICE

Delete the entire article.

CONNECTICUT
SUPPLEMENTAL SPECIFICATION
SECTION 9.75
MOBILIZATION

Delete the entire Section and replace with the following:

SECTION 9.75
MOBILIZATION AND PROJECT CLOSEOUT

9.75.01—Description: This item consists of

1. all work necessary for moving Project personnel and equipment to the Project Site;
2. all work necessary for the establishment of the Contractors' field offices, buildings and other facilities necessary for Contract performance;
3. the preparation of work plans and other documents that must be submitted by the Contractor to the Department prior to the start of physical Project construction. These initial submittals are identified elsewhere in the Contract and may include Project schedules, Project management plans, staging and storage areas, safety plans, quality control plans, erosion and sedimentation control plans, and other documents addressing general Project sequencing or management;
4. demobilization of plant and equipment;
5. completion of all physical work, and
6. completion of administrative closeout items as required by the Contract.

The work entailed in this item shall not be subcontracted in whole or part.

9.75.04—Method of Measurement: This work will be measured for payment in the manner described hereinafter; however, the total Contract amount earned will not include payments for mobilization that were earned during the period covered by the current monthly estimate, but will include those payments for mobilization that were previously earned and certified for payment.

1. When the first Project payment estimate is reviewed by the Engineer, 25% of the lump sum bid price for this item or 2.5% of the total original Contract price, whichever is less, will be certified for payment as a part of that estimate.
2. When the Contractor's initial Project submittals are accepted by the Engineer, 50% of the lump sum bid price for this item or 5% of the total original Contract price, whichever is less, minus any previous Project payments made to the Contractor for this item, will be certified for payment.
3. When the Contractor's initial Project submittals are accepted by the Engineer, and 15% of the total original Contract price has been earned by the Contractor, 70% of the lump sum price of this item or 7% of the total original Contract price, whichever is less, minus any previous Project payments made to the Contractor for this item, will be certified for payment.
4. When 30% of the total original Contract price has been earned by the Contractor, 85% of the lump sum price of this item or 8.5% of the total original Contract price, whichever is less, minus any previous payments made to the Contractor for this item, will be certified for payment.
5. When the requirements of Article 1.08.13 have been satisfied by the Contractor, 95% of the lump sum price of this item, minus any previous payments made to the Contractor for this item, will be certified for payment.
6. When the requirements of Article 1.08.14 have been satisfied by the Contractor, 100% of the lump sum price of this item, minus any previous payments made to the Contractor for this item, will be certified for payment. When this payment is made, the Contractor should have received full Contract payment for this item.

Nothing herein shall be construed to limit or preclude the Department from making partial payments to the Contractor that are provided for elsewhere in this Contract.

9.75.05—Basis of Payment: The work under this item will be paid for at the Contract lump sum price for "Mobilization and Project Closeout," which price shall include materials, equipment, tools, transportation, labor and all work incidental thereto.

Payment for this item shall be made only once; *i.e.*, for only one instance of mobilization as described in Article 9.75.01 above. If the Contractor mobilizes equipment or facilities more than one time during the course of the Project, due to reasons solely the responsibility of the Department, the additional work entailed therein will be paid for as Extra Work under Section 1.04.05 hereof.

Pay Item	Pay Unit
Mobilization and Project Closeout	l.s. (l.s.)

CONNECTICUT
SUPPLEMENTAL SPECIFICATION
SECTION 9.77
TRAFFIC CONE

9.77.02—Materials:

Change the end of the last sentence as follows:

“ Traffic cones used at night shall be reflectorized by utilizing Type VI or Type IX Retroreflective Sheeting, in accordance with Article M.18.09.”

Add the following paragraph after the only paragraph:

“ Prior to using traffic cones on the project, the Contractor shall submit to the Engineer a copy of the manufacturer’s self-certification that the traffic cones comply with the requirements of the NCHRP Report 350 or the AASHTO MASH for Category 1 Devices.”

CONNECTICUT
SUPPLEMENTAL SPECIFICATION
SECTION 9.78
TRAFFIC DRUM

9.78.02—Materials:

Delete the second and third paragraph and replace with the following:

“ Type IX Retroreflective Sheeting, in accordance with Article M.18.09, shall be used on traffic drums. Only one type sheeting shall be used on a drum and all drums furnished on a construction project shall be manufactured with the same type retroreflective sheeting.

Prior to using traffic drums on the project, the Contractor shall submit to the Engineer a copy of the manufacturer’s self-certification that the traffic drums comply with the requirements of the NCHRP Report 350 or the AASHTO MASH for Category 1 Devices.”

CONNECTICUT
SUPPLEMENTAL SPECIFICATION
SECTION 9.79
CONSTRUCTION BARRICADES

9.79.01—Description:

Delete the entire article and replace with the following:

"**9.79.01—Description:** Under this item the Contractor shall furnish all construction barricades of the specified type required on the Project to comply with the requirements of NCHRP Report 350 (TL-3), or the AASHTO MASH, and the requirements stated in the item "Maintenance and Protection of Traffic," as shown on the plans and as directed by the Engineer."

9.79.02—Materials:

Change the second sentence as follows:

" The frame shall be of polyvinyl chloride pipe meeting the requirements of ASTM D2241 for PVC 1120 or 1220, SDR 21 (pressure rating 200 psi (1380 kPa)); ASTM D3034, SDR 35 or an approved equal. All straight members shall be the color white."

Delete the last two paragraphs and replace with the following four paragraphs:

" Alternate stripes of white and orange Type IV or Type IX retroreflective sheeting shall be applied to the horizontal members as shown on the plans. Only 1 type sheeting shall be used on a barricade and all barricades on a construction project shall be constructed with the same type of retroreflective sheeting. Retroreflective sheeting shall meet the requirements of Article M.18.09.

Construction barricades shall be designed and fabricated so as to prevent them from being blown over or displaced by wind. Construction barricades shall be approved by the Engineer before they are placed into service.

Materials Certificates shall be required confirming compliance with the requirements set forth in the plans and specifications for these barricades.

Prior to using barricades on the Project, the Contractor shall submit to the Engineer a copy of the Letter of Acceptance issued by the FHWA to the manufacturer documenting that the barricades comply with the requirements of NCHRP Report 350 (TL-3) or the AASHTO MASH for Category 2 Devices."

9.79.03—Construction Methods:

Delete the second paragraph in its entirety.

Delete the last two paragraphs and replace with the following:

“ Ineffective barricades, as determined by the Engineer and in accordance with ATSSA guidelines contained in “Quality Standards for Work Zone Traffic Control Devices,” shall be replaced by the Contractor at no cost to the State.

Barricades that are no longer required shall be removed from the Project and shall remain the property of the Contractor.”

CONNECTICUT
SUPPLEMENTAL SPECIFICATION
SECTION 9.80
CONSTRUCTION STAKING

Delete the entire Section and replace with the following:

SECTION 9.80
CONSTRUCTION STAKING

9.80.01—Description: The work under this item shall consist of construction layout and reference staking necessary for the proper control and satisfactory completion of work on the Project, however establishment of Property lines, highway lines, or non-access lines shall not be deemed work under this item.

This item shall also include all construction layout and reference staking required for identifying construction features within 25 ft (7.625 m) of regulated areas, and for the proper placement of all relocated underground and aerial utilities.

9.80.02—Materials: Stakes used for control staking shall be a minimum of 1 in x 1 in (25 mm x 25 mm) in width and a minimum of 18 in (0.5 m) in length. Stakes shall be legibly marked and shall be visible from the edge of the travelway, and shall be durable enough to last for the duration of the Contract. In areas where traditional staking cannot be established, other materials or methods may be used to mark critical locations, as approved or directed by the Engineer. For slope limits, pavement edges, gutter lines, etc., where so-called "green" or "working" stakes are commonly used, lesser quality stakes will be acceptable, provided that the stakes are suitable for the intended purpose

9.80.03—Construction Methods: The Department will furnish the Contractor such control points, bench marks, and other data as may be necessary for the construction staking and layout by qualified engineering or surveying personnel as noted elsewhere herein.

The Contractor shall be responsible for the placement and preservation of adequate ties to reference points necessary for the accurate re-establishment of base lines, center lines and at all critical locations, including all line-striping and grooving for line-striping, and grades as shown on the plans or directed by the Engineer.

Stakes, references, and batter boards required for construction operations, signing and traffic control shall be furnished, set and properly referenced by the Contractor. The Contractor shall be solely and completely responsible for the accuracy of the line and grade of all features of the work. The Contractor shall call to the Engineer’s attention immediately any errors or apparent discrepancies found in previous surveys, plans, specifications or special provisions for correction or interpretation prior to proceeding with the affected work.

During roadway construction (or Site work), the Contractor shall provide and maintain for the appropriate periods, as determined by the Engineer, reference stakes at maximum 100-ft (30-m) intervals outside the slope limits. Further, the Contractor shall provide and maintain reference stakes at 50-ft (15-m) intervals immediately prior to and during the formation of subgrade and the construction of subsequent pavement layers.

These stakes shall be properly marked as to station and offset, and shall be referenced to the proposed grade.

Wetland Areas: When identified in the Contract, the Contractor shall provide additional reference stakes to assist the Engineer and regulatory personnel in the duties at regulated areas, including inland wetlands, tidal wetlands and watercourses. The Contractor shall place additional reference stakes to identify all slope limits, culvert ends, endwalls, riprap areas and other construction features within 25 ft (7.625 m) of regulated areas. For the placement of these additional stakes the regulated areas, approximate slope limits and other construction features are those shown on the environmental permit plates included in the Contract, or the latest revisions available. The Contractor shall provide stakes at a maximum spacing of 50 ft (15 m). Each stake shall be marked in a manner acceptable to the Engineer, to identify the baseline station and offset, and the feature it represents. The Contractor shall maintain or replace these stakes until the Engineer approves their removal.

Utility Relocations: The Contractor shall provide additional reference stakes to assist the Engineer and public utility personnel to accurately identify the proposed locations for utility facilities to be relocated. At least two weeks prior to the scheduled relocation of public utilities, the Contractor shall stake out the following features throughout the limits of utility relocations:

1. The proposed edge of road on the side adjacent to the proposed utility relocations.
2. Both edges of proposed sidewalks, where shown on the plans.

The Contractor shall provide stakes at a maximum spacing of 25 ft (7.625 m), unless directed otherwise by the Engineer.

The Contractor shall provide and maintain reference stakes at structures such as drainage structures, and shall include additional reference stakes for the determination of the structure alignments as may be needed for the proper construction of the drainage or other structure. The reference stakes shall be placed immediately prior to, and maintained during, the installation of the drainage structure. These stakes shall be properly marked as to station and offset, and shall be referenced to the proposed grade.

The Contractor shall furnish to the Engineer copies of any data used in setting and referencing stakes and other layout markings used by the Contractor after completion of each related operation, if requested to do so by the Engineer.

The Contractor shall provide safe facilities for convenient access by Department forces to all survey stakes, control points, batter boards, and references when requested to do so by the Engineer.

All staking shall be performed by qualified engineering or surveying personnel trained, experienced and skilled in construction layout and staking of the type required under the Contract. Prior to the start of related work, the Contractor shall submit to the Engineer for review and comment the qualifications of personnel responsible for construction staking on the Project. The submission shall include a description of the experience and training that the proposed personnel possesses and a list of State projects that the personnel have worked on previously. On all bridge projects, surveying shall be performed under the direct supervision of a Professional Surveyor licensed in the State of Connecticut. All field layout and staking required for the Project shall be performed under the direct supervision of a person, or persons, with engineering background, experienced in the direction of such work and acceptable to the Engineer. If the personnel responsible for construction staking should change during the course of the

Project, a revised submittal will be required prior to the Contractor's being allowed access to the Site.

The Department may check the control of the work, as established by the Contractor, at any time. The Contractor will be informed of the results of these checks, but the Department, by so doing, in no way relieves the Contractor of responsibility for the accuracy of the layout work. The Contractor shall correct or replace, at the Contractor's own expense, any deficient layout and construction work that may result from inaccuracies in the Contractor's staking operations from its failure to report such inaccuracies found in work done by the Department or by others. If, as a result of such inaccuracies, the Department is required to make further studies, redesign, or both, the Department will deduct all expenses incurred by the Department in doing so from any monies it owes to the Contractor.

The Contractor shall furnish all necessary personnel, surveying instruments, engineering equipment and supplies, materials, transportation, and work incidental to the accurate and satisfactory completion of work under this item.

For roadways where the existing pavement markings need to be reestablished or grooved markings are to be used: Prior to any resurfacing or obliteration of existing pavement markings, the Contractor and a representative of the Engineer must establish and document pavement marking control points from the existing markings. These control points shall be used to reestablish the positions of the lanes, the beginnings and endings of tapers, channelization lines for on- and off-ramps, lane-use arrows, stop bars, driveways, private drives, road entrances, and any lane transitions in the Project area, including all line striping grooving. The Contractor shall use these control points to provide appropriate premarking prior to the installation of final markings, including grooves.

The Contractor shall provide and maintain reference stakes or markings at 100-ft (30-m) intervals immediately off the edge of pavement, so that the Contractor will later be able to reestablish the existing pavement markings and necessary line stripe grooving limits. The Contractor shall also provide and maintain additional reference stakes and/or markings at any point where there is a change in pavement markings, so that the Contractor will later be able to reestablish the existing pavement markings and grooving limits.

For non-limited access roadways: On non-limited access roadways the Contractor may need to adjust the final locations of the pavement marking or grooving limits in light of a need to accommodate pedestrian and bicycle traffic. Prior to any resurfacing or obliteration of existing pavement markings, the Contractor, the Engineer, and a representative from the Division of Traffic Engineering must establish and document pavement marking control points from the existing marking and grooving limits as described above. The control points at that time may be adjusted to provide wider shoulders while maintaining through travel lane widths of no less than 11 ft (3.3 m). Suggested lane/shoulder widths for commonly encountered half sections are shown in the table below.

Centerline to curb or edge of road	Lane width	Shoulder width
12 to 16 ft (3.6 to 4.9 m)	11 ft (3.3 m)	Remaining Pavement
17 to 20 ft (5.2 to 6.1 m)	12 ft (3.6 m)	Remaining Pavement

9.80.04—Method of Measurement: Construction staking will be measured for payment as a Contract lump sum item.

9.80.05—Basis of Payment: Construction staking will be paid for at the Contract lump sum price for "Construction Staking," which price shall include all maintenance, materials, tools, equipment, labor and work incidental thereto, including removal of materials. The Contractor shall submit to the Department a schedule of payment values for review and comment prior to payment.

Pay Item	Pay Unit
Construction Staking	l.s. (l.s.)

CONNECTICUT
SUPPLEMENTAL SPECIFICATION
SECTION 9.81
42 INCH (1 METER) TRAFFIC CONE

9.81.01—Description:

Delete the only sentence and replace with the following:

“ This item shall consist of furnishing 42-inch (1.07-meter) retroflective traffic cones required on the Project to meet the requirements of the traffic control plans, as stated in the item "Maintenance and Protection of Traffic," as shown on the plans or as directed by the Engineer.”

9.81.02—Materials:

Delete the last two paragraphs and replace with the following:

“ Retroflective stripes shall be fabricated from Type IX retroflective sheeting. All stripes shall be of one type of sheeting. Retroflective sheeting shall conform to Article M.18.09. Prior to using traffic cones on the Project, the Contractor shall submit to the Engineer a copy of the manufacturer’s self-certification that the traffic cones comply with the requirements of NCHRP Report 350 or the AASHTO MASH for Category 1 Devices.”

9.81.03-Construction Methods:

In the first sentence, change “manufacturers” to “manufacturer’s.”

CONNECTICUT
SUPPLEMENTAL SPECIFICATION
SECTION 10.00
GENERAL CLAUSES FOR HIGHWAY ILLUMINATION AND TRAFFIC SIGNAL PROJECTS

Add the following new article after **10.00.13 Service Installations:**

" 10.00.14- Maintenance of Illumination During Construction: The Contractor shall organize the Project work so that any portion of roadway which has existing roadway illumination and is open for use remains lighted. The Contractor shall also provide illumination on all temporary crossovers, ramps and roadways that are constructed as part of staged construction and that are open for use. Highway illumination may consist of: existing lighting, new lighting, temporary lighting, or any combination thereof. It is the Contractor's responsibility to stage the installation or relocation of service cabinets, poles, lights, and circuitry so that all roadways of the kind described above remain lighted. If it is necessary to install temporary poles, lights, or circuitry to maintain the integrity of the highway illumination system, such work shall be submitted to the Engineer for approval prior to installation, and will be paid for at the Contract bid unit price for the relevant items. Temporary illumination work not specifically covered by the Contract specifications and pay items will be paid for as extra work at the discretion of the Engineer.

If the Contract includes temporary illumination plans, those plans shall serve as a framework for providing roadway illumination during construction. Temporary illumination plans may not represent the full extent of the temporary illumination work required, or the exact quantity of temporary lights required to maintain proper roadway illumination.

Prior to the start of any work that will interfere with the existing lighting system, the Contractor and ConnDOT District Electrical Maintenance personnel shall inspect the system for lighting outages, pole knockdowns, and circuit malfunctions. Deficiencies will be noted and repaired by Department forces prior to the start of work by the Contractor.

Once the Contractor's work interferes with or impacts the existing roadway lighting system, maintenance of that system within the Project limits becomes the Contractor's responsibility. The repair of lighting system malfunctions occurring outside of the project limits, caused by the Contractor's work, shall also be the Contractor's responsibility. District Construction personnel will note the start and end date of the Contractor's responsibility for maintenance of any existing lighting system.

The Contractor shall maintain the illumination throughout the duration of the Project, until the Project is accepted by the State. The Contractor shall supply to the Project Engineer and to the ConnDOT District Electrical Maintenance Supervisor, the names and phone numbers of a primary and back-up representative, to be contacted should a problem with the lighting system occur.

Whoever discovers a lighting outage or pole damage/knockdown within the Project limits shall immediately notify ConnDOT Highway Operations of same as follows:

1. For projects in Districts 1, 2, and 4, call (860) 594-3447.
2. For projects in District 3 and along the Interstate 95 corridor within District 2, call (203) 696-2690.

The following procedures will be followed for lighting outages:

1) Once notified of a lighting outage, ConnDOT Electrical Maintenance personnel will assess the situation, and in the case of a pole knockdown, may clear the pole from the roadway and make safe any exposed wires.

2) The Project Inspector and the Contractor's designated representative shall be notified after the lighting outage has been assessed by ConnDOT Electrical Maintenance, transferring responsibility for further repairs to the Contractor.

3) Upon notification, the Contractor shall be responsible to repair the lighting system before the normal nighttime turn-on of the lights. If this cannot be achieved, the Contractor shall make the lighting operational prior to the next normal nighttime turn-on of the lights, up to a maximum of 24 hours from the time the Contractor was notified of the problem. The Contractor shall contact the Project Inspector to discuss the situation, the steps to be taken to bring the lighting back on line, and the time frame for doing so.

4) For isolated individual luminaire outages (not a continuous circuit), the Contractor shall repair such luminaires within 48 hours from the time that the Contractor became aware of the outage.

The Contractor shall follow standard "lock-out," "tag-out," and "Call Before You Dig" procedures when working on the lighting circuit. Both the Contractor and ConnDOT Electrical Maintenance shall have mutual access to active lighting control cabinets.

The Contractor will be reimbursed for any costs associated with the maintenance of the existing lighting system that are beyond the Contractor's control. Reimbursements will be for damage caused by the general public and normal system age related component failures (such as lamp burn-out, ballast/starter failure or cable splice failure). However, the Contractor shall be responsible for repair of damage to the existing lighting system incurred as the result of their operations including damage caused by improper wiring methods. All repairs or replacements due to the Contractor's operations shall be made by the Contractor at their expense.

The Project Inspector will maintain a log book of any lighting repair work performed, which will include a description of the repairs, and the date the work was performed. The log book will be made accessible to ConnDOT Electrical Maintenance personnel.

Temporary illumination circuitry shall consist of pre-assembled aerial cable of the type and size as indicated in the Contract documents or as directed by the Engineer.

The Contractor shall notify the Engineer when aerial cable cannot be installed due to construction activities and shall suggest another method for installation of the cable.

Alternate options may include installing cable in duct underground, or installing surface-mounted cable in duct or PVC conduit with cable along the backside of a bridge parapet or temporary concrete barrier curbing. Temporary cable in duct/conduit or aerial cable lying directly on the ground will not be allowed. The option of surface-mounting duct or conduit to the backside of a parapet or barrier will be allowed only when construction activities make it necessary, and where the surface-mounted conduit will not expose workers to a high voltage hazard. The Contractor must obtain the Engineer's approval to do so prior to installing temporary circuitry not installed overhead, unless otherwise indicated on the plans.

When temporary circuitry is installed in trench, standard warning tape procedures shall be followed as set forth in Article 1.05.15. When temporary circuitry is surface mounted to the backside of a parapet or barrier wall, the Contractor shall install warning placards which read: "Live Electricity." Warning placards shall be installed at the beginning, end, and at intermittent points 100 feet (30 meters) apart along the exposed length of the duct/conduit. All temporary lighting circuits shall include a continuous No. 8 bare copper grounding conductor connected to all light standards and effectively grounded as per the NEC."

CONNECTICUT
SUPPLEMENTAL SPECIFICATION
SECTION 10.01
TRENCHING AND BACKFILLING

10.01.01- Description:

In the only sentence of the first paragraph after "…satisfactory…" *add the following:* "clean-up and".

In the only sentence of the second paragraph after "…reconstruction of…" *add the following:* "bituminous, concrete and granite curbing,".

10.01.05- Basis of Payment:

In the only sentence of the second paragraph after "…mulching…" *add the following:* "clean-up and". *After* "…installing…" *add the word* "curbing,".

At the end of the third paragraph, add the following: "In the absence of a "Rock in Trench Excavation" item, the work will be compensated as extra work."

In the only sentence of the sixth paragraph, after "…unit price for 'Concrete Sidewalk'…" *add the following:* "or as extra work, if no unit price has been established."

CONNECTICUT
SUPPLEMENTAL SPECIFICATION
SECTION 10.10
CONCRETE HANDHOLE

10.10.02 – Materials:

Replace “M.03.01” *with* “M.03” *for both Class A and Class C Concrete.*

10.10.05 – Basis of Payment

In the first sentence, remove the words “ground wire”.

At the end of the paragraph add the following sentence:

“The ground wire (bonding wire) is included in the Contract unit price under Section 10.08 – Electrical Conduit.”

Add the word “Cover” *to the end of the pay item* “Cast Iron Handhole”

CONNECTICUT
SUPPLEMENTAL SPECIFICATION
SECTION 12.04
SIGN PANEL OVERLAY

12.04.02—Materials:

Replace the second through fourth sentences with the following:

" Primer shall meet the requirements of A-A-2336.
The enamel paint to be used for the finish coat shall be as specified in Article M.18.08.
Copy shall meet the requirements contained in M.18.09 or M.18.10, as specified in the Contract."

12.04.03—Construction Methods:

Replace the entire article with the following:

" **12.04.03—Construction Methods:** The plywood overlay shall completely cover the existing sign including the exit crown panel. The plywood sheets shall be joined together to form a single overlay by means of 1 in x 4 in (25 mm x 100 mm) construction grade fir wood battens securely fastened to adjoining panels with 1 in (25 mm) galvanized wood screws. The battens shall be fastened to the Grade C back face of the overlay.
Before assembly and before painting, all wood shall be treated with a coat of wood preservative on all surfaces. The wood preservative shall be of a type which will have no adverse effect on paint adhesion and will not cause future paint discoloration.
The entire overlay surface shall be painted with 1 coat of primer and 1 coat of enamel. The plywood shall remain in place for the duration of the Project.
All work fabricating and clamping the plywood sign panel overlay shall be done to ensure that no damage occurs to the existing sign."

CONNECTICUT
SUPPLEMENTAL SPECIFICATION
SECTION 12.07
SIGN FACE – EXTRUDED ALUMINUM

*Change the Section title from "***Sign Face – Extruded Aluminum (Type III Reflective Sheeting)***" to "***Sign Face – Extruded Aluminum***."*

12.07.01—Description:

In the first sentence, change "reflective" *to* "retroreflective."

12.07.03—Construction Methods:

In the first sentence of the second paragraph, change "Reflective" *to* "Retroreflective."

In the second sentence of the second paragraph, change "reflective" *to* "retroreflective."

After the last paragraph, add the following:

" All overhead sign foundations shall be field staked. The locations of the stakes shall be accepted by an Engineer from the Division of Traffic Engineering, a minimum of seven (7) days prior to installation.

For all side mounted signs, the edge of the sign closest to the roadway and the sign foundation shall be field staked and accepted by an Engineer from the Division of Traffic Engineering, a minimum of seven (7) days prior to installation.

For side-mounted signs, the offset to the near edge of the sign face shall exceed the maximum deflection of the guide rail, unless otherwise shown on the plans or directed by the Engineer."

12.07.05—Basis of Payment:

In the Pay Item – Pay Unit table, delete "(Type IV Reflective Sheeting)."

CONNECTICUT
SUPPLEMENTAL SPECIFICATION
SECTION 12.08
SIGN FACE – SHEET ALUMINUM

12.08.01—Description:

Delete the only paragraph and replace with the following:

" This item shall consist of furnishing and installing sign face-sheet aluminum signs of the type specified, metal sign posts, span-mounted sign brackets and mast arm-mounted sign brackets at locations indicated on the plans or as ordered and complying with the requirements of the plans and these Specifications."

12.08.02—Materials:

Delete the entire article and replace with the following:

" Retroreflective sheeting shall meet the requirements of Article M.18.09, Type IV or IX.
Sheet aluminum sign blanks shall meet the requirements of Article M.18.13.
Silk screening of Type IV or IX retroreflective sheeting shall meet the requirements specified by the retroreflective sheeting manufacturer.
Metal sign posts shall meet the requirements of Article M.18.14.
Sign mounting bolts shall meet the requirements of Article M.18.15."

12.08.03—Construction Methods:

In the first sentence of the first paragraph, change "... shall conform to ...*" to "*...shall be as shown in ...*"*

In the second, third and fourth sentences of the first paragraph, change "reflective" *to* "retroreflective."

*In the third and fourth sentences of the first paragraph, change "*Type III reflective*" to "*Type IV or IX retroreflective*."*

*In the first sentence of the second paragraph, change "*Reflective*" to "*Retroreflective*."*

*In the second sentence of the second paragraph, change "*reflective*" to "*retroreflective*."*

*In the first sentence of the third paragraph, change "*Type I, Type II or Type III reflective*" to "*Type IV or IX retroreflective*."*

*In the first and second sentences of the third paragraph, change "*reflective*" to "*retroreflective*."*

In the last sentence of the third paragraph, change "Type I or Type II reflective" *to* "Type IV or IX retroreflective."

Delete the last sentence of the last paragraph.

12.08.05—Basis of Payment:

In the only paragraph, delete "… or parapet mounted sign support …"

CONNECTICUT
SUPPLEMENTAL SPECIFICATION
SECTION 12.10
EPOXY RESIN PAVEMENT MARKINGS, SYMBOLS AND LEGENDS

Change the Name of the Section as Follows:

SECTION 12.10
EPOXY RESIN PAVEMENT MARKINGS

12.10.03—Construction Methods:

Delete subarticle 3. "Performance and Warranty" *and replace it with the following:*

" **3. Initial Performance:** The retroreflectivity of the markings applied must be measured by the Contractor 3 to 14 days after installation. A Certified Test Report (CTR), in accordance with Article 1.06.07, must be submitted to the Engineer no later than 10 days after the measurements are taken using the procedures and equipment detailed below:

Test Lots - The following test lots will be randomly selected by the Engineer to represent the line markings applied:

TABLE 12.10.03-3.1: Line Test Lots

Length of line	Number of Lots	Length of Test Lot
< 1.0 mi (1610 m)	1	1000 ft. (300 m)
≥1.0 mi (1610 m)	1 per 1.0 mi (1610 m)	1000 ft. (300 m)

Measurement Equipment and Procedure

Portable Retroreflectometer

1. Skip line measurements shall be obtained for every other stripe, taking no more than 2 readings per stripe with readings no closer than 20 in (500 mm) from either end of the marking.
2. Solid line test lots shall be divided into 10 sub-lots of 100 ft (30 m) length and measurements obtained at 1 randomly select location within each sublot.
3. For symbols and legends, 10% of each type shall be measured by obtaining 5 measurements at random locations on the symbol or legend.
4. The Apparatus and Measurements shall be made in accordance with ASTM E1710 (Standard Test Method for Measurement of Retroreflective Pavement Marking Materials with CEN-Prescribed Geometry Using a Portable Retroreflectometer) and evaluated in accordance with ASTM D7585 (Standard Practice for Evaluating Retroreflective Pavement Markings Using Portable Hand-Operated Instruments).

Mobile Retroreflectometer

1. Calibration of the instruments shall be in accordance with the manufacturer's instructions.
2. Retroreflectivity shall be measured in a manner proposed by the Contractor and approved by the Engineer. The basis of approval of the test method will be

conformance to a recognized standard test method or provisional standard test method.

The measurements shall be obtained when the pavement surface is clean and dry and shall be reported in millicandelas per square foot per foot candle - mcd/ft^2/fc (millicandelas per square meter per lux – mcd/m²/lx). Measurements shall be obtained sequentially in the direction of traffic flow.

Additional Contents of Certified Test Report

The CTR shall also list:

1. Project and Route number
2. Geographical location of the test site(s), including distance from the nearest reference point
3. Manufacturer and model of retroreflectometer used
4. Most recent calibration date for equipment used
5. Grand Average and standard deviation of the retroreflectivity readings for each line, symbol or legend

Initial Performance:

In order to be accepted, all epoxy resin pavement markings must meet the following minimum retroreflectivity reading requirement:

White Epoxy: minimum retroreflectivity reading of 400 mcd/ft^2/fc (mcd/m²/lx)

Yellow Epoxy: minimum retroreflectivity reading of 325 mcd/ft^2/fc (mcd/m²/lx)

At the discretion of the Engineer, the Contractor shall replace, at its expense, such amount of lines, symbols and legends that the grand average reading falls below the minimum value for retroreflectivity. The Engineer will determine the areas and lines to be replaced. The cost of replacement shall include all materials, equipment, labor and work incidental thereto.

4. Crosswalks: Only glass beads meeting the requirements of Grading “A” (smaller beads) shall be applied at a rate of 25 lb/gal (3 kg/l) of epoxy pavement marking material.”

CONNECTICUT
SUPPLEMENTAL SPECIFICATION
SECTION 12.20
CONSTRUCTION SIGNS—
TYPE III REFLECTIVE SHEETING

Delete the entire Section, including "**Type III Reflective Sheeting**" *in the title, and replace it with the following:*

SECTION 12.20
CONSTRUCTION SIGNS

12.20.01—Description: Under this item the Contractor shall furnish, install and remove construction signs with retroreflective sheeting and their required portable supports or metal sign posts that comply with the requirements of NCHRP Report 350 (TL-3) or MASH for Category 2 Devices. The construction signs and their required portable supports or metal sign posts shall comply with the signing requirements stated in the item "Maintenance and Protection of Traffic," as shown on the plans and/or as directed by the Engineer. The Contractor shall furnish a sufficient number of signs to provide the signing patterns for all operations which are being undertaken concurrently.

12.20.02—Materials: Prior to using the construction signs and their portable supports, the Contractor shall submit to the Engineer a copy of the Letter of Acceptance issued by the FHWA to the manufacturer documenting that the devices (both sign and portable support tested together) comply with the requirements of NCHRP Report 350 (TL-3) or MASH for Category 2 Devices.

All sign faces shall be rigid and reflectorized and shall meet the requirements of Article M.18.09. If used as rigid substrate, sheet aluminum sign blanks shall comply with the requirements of Article M.18.13. Metal sign posts shall comply with the requirements of Article M.18.14. Application of retroreflective sheeting, legends, symbols, and borders shall comply with the requirements specified by the retroreflective sheeting manufacturer. Attachments shall be provided so that the signs can be firmly attached to the portable sign supports or metal posts without causing damage to the signs.

12.20.03—Construction Methods: The signs and their portable supports or metal posts shall comply with the requirements as shown on the plans and the latest edition of the "Manual on Uniformed Traffic Control Devices." Drawings of the signs, showing placement and dimensions of legend and border, are available for inspection at the Division of Traffic, Connecticut Department of Transportation.

Various types of portable sign supports may be used. These portable supports shall be fabricated in such a manner as to minimize the possibility of the signs being blown over or displaced by the wind from passing vehicles and are to be of a yielding type to withstand impact with minimal damage to the signs, supports, or vehicles. Portable sign supports shall be approved by the Engineer before they are utilized on the Project. Mounting height of signs on portable sign supports shall be a minimum of 1 ft (0.3 m)

and a maximum of 2 ft (0.6 m), measured from the pavement to the bottom of the sign.

Signs in other than good condition shall be replaced with acceptable signs as determined by the Engineer.

Suitable attachments shall be provided so that the signs can be firmly attached to the portable sign supports or metal posts without causing damage to the signs.

The following types of construction signs shall not be used: mesh, non-rigid, roll-up, corrugated or waffle board types substrates, foam core and composite aluminum sign substrates.

Field Performance: Retroreflective sheeting processed and applied to sign blank materials in accordance with the sheeting manufacturer's recommendations, shall perform effectively for a minimum of three (3) years. The retroreflective sheeting will be considered unsatisfactory if it has deteriorated due to natural causes to the extent that: (1) the sign is ineffective for its intended purpose when viewed from a moving vehicle under normal day and night driving conditions; or (2) the coefficient of retroreflection is less than 100 when measured at 0.2 degree observation angle and -4 degree entrance angle. All measurements shall be made after sign cleaning according to the sheeting manufacturer's recommendations.

Ineffective signs, as determined by the Engineer and in accordance with the ATSSA guidelines contained in "Quality Standards for Work Zone Traffic Control Devices," shall be replaced by the Contractor at no cost to the State.

Signs and their portable sign supports or metal posts that are no longer required shall be removed from the Project and shall remain the property of the Contractor.

12.20.04—Method of Measurement: The work to furnish, install and remove construction signs will be measured for payment by the number of square feet (square meters) of sign face delivered and used on the Project. Sign supports will not be measured for payment.

12.20.05—Basis of Payment: This item will be paid for at the Contract unit price per square foot (square meter) for "Construction Signs," delivered and used on the Project, which price shall include the signs, portable sign supports, metal sign posts and all hardware required to attach the sign to the support or posts. Each sign and support or posts furnished will be paid for once, regardless of the number of times used on the Project.

Pay Item	Pay Unit
Construction Signs	s.f. (s.m)

CONNECTICUT
SUPPLEMENTAL SPECIFICATION
SECTION 18.00
GENERAL CLAUSES -
IMPACT ATTENUATION SYSTEMS

18.00.01—Description:

Change the end of the first sentence "... with the Specifications and in conformity with the Plans or as directed by the Engineer." *to* "… with the plans and Specifications or as directed by the Engineer."

18.00.02—Performance Criteria:

Delete the entire article and replace it with the following:

" These devices shall have approval in writing from FHWA documenting that they comply with the requirements of the NCHRP Report 350 or the AASHTO MASH for Category 3 Devices."

18.00.05—Delineation of Impact Attenuation Systems:

Delete the entire article and replace it with the following:

" All impact attenuation systems shall have an attenuator reflector attached to the front of the system, as shown on the plans."

CONNECTICUT
SUPPLEMENTAL SPECIFICATION
SECTION 18.04
TYPE C AND NC – IMPACT ATTENUATION SYSTEMS

Delete the entire article.

CONNECTICUT
SUPPLEMENTAL SPECIFICATION
SECTION 18.06
TYPE D PORTABLE IMPACT ATTENUATION SYSTEM

18.06.02—Materials:

Delete the first two paragraphs and replace with the following:

“ Prior to using a new TMA, the Contractor shall submit to the Engineer a materials certificate in accordance with Article 1.06.07 for each system supplied and a copy of the FHWA Letter of Acceptance issued to the manufacturer documenting that the device complies with the requirements of the NCHRP Report 350 (TL-3) or the AASHTO MASH for Category 3 Devices.

If the system is not furnished new, the Contractor shall document and demonstrate to the Engineer’s satisfaction that the system complies with the requirements of a new system, NCHRP Report 350 (TL-2), or the AASHTO MASH and may be used until the end of the attenuation device's useful service life.”

In the second sentence of the sixth paragraph, change “Type III retro-reflective” *to* “Type IV retroreflective.”

CONNECTICUT
SUPPLEMENTAL SPECIFICATION
SECTION M.03
PORTLAND CEMENT CONCRETE

Delete the entire Section and replace it with the following:

SECTION M.03
PORTLAND CEMENT CONCRETE

M.03.01 - Component Materials
M.03.02 - Mix Design Requirements
M.03.03 - Producer Equipment and Production Requirements
M.03.04 - Curing Materials
M.03.05 - Non Shrink, Non Staining Grout
M.03.06 - Expansive Cement for Anchoring
M.03.07 - Chemical Anchors
M.03.08 - Joint Materials
M.03.09 - Protective Compound/Sealers
M.03.10 - Formwork

M.03.01 – Component Materials

1. Coarse Aggregate: Coarse aggregate shall be broken stone, gravel, or reclaimed concrete aggregate defined as mortar-coated rock, consisting of clean durable fragments of uniform quality throughout. It shall be free from soft, disintegrated pieces, mud, dirt, organic or other injurious material and shall not contain more than 1 percent of dust by mass, as determined by AASHTO T-11. Coarse aggregate of a size retained on a 1-inch (25 mm) square opening sieve shall not contain more than 8% of flat or elongated pieces, whose longest dimension exceeds 5 times their maximum thickness. Heating or cooling of coarse aggregates may be required to meet concrete mix temperature requirements at time of placement.

(a) Soundness: When tested with magnesium sulfate solution for soundness, using AASHTO Method T 104, coarse aggregate shall not have a loss of more than 10% at the end of 5 cycles.

(b) Loss on Abrasion: When tested by means of the Los Angeles Machine, using AASHTO Method T 96, coarse aggregate shall not have a loss of more than 40%.

(c) Gradation: Grading and stone sizes of the coarse aggregate shall conform to Article M.01.01 as determined by AASHTO T-27. All coarse aggregate proportions shall be approved in advance by the Transportation Division Chief (TDC) as part of the Mix Design requirements.

(d) Storage: Aggregate stockpiles shall be located on smooth, hard, sloped/well-drained areas. Each source and gradation shall have an individual stockpile or bin. Aggregates shall be handled from stockpiles or other sources to the batching plant in such manner as to minimize segregation of the material. Aggregates that have become segregated, or mixed with earth or foreign material, shall not be used.

(e) Reclaimed Concrete Aggregate: In addition to the above requirements (a-d), when reclaimed concrete aggregate is proposed, it shall be tested for chloride in AASHTO T-260 "Sampling and Testing for Chloride Ion in Concrete and Concrete Raw Materials." Aggregate shall not be used if the chloride content as determined from this test exceeds 0.5 pound/cubic yard (297 g/cubic meter). Regardless of chloride content, reclaimed concrete aggregate shall not be used in concrete mixes used for pre-stressed concrete construction.

2. Fine Aggregate: Fine aggregate shall be natural or manufactured sand consisting of clean, hard, durable, uncoated particles of quartz or other rock, free from lumps of clay, soft or flaky material, mica, loam, organic or other injurious material. In no case shall fine aggregate containing lumps of frozen material be used. Heating or cooling of fine aggregates may be required to meet concrete mix temperature requirements at time of placement.

For continued shipments of fine aggregate from a given source, the fineness modulus of any sample shall not vary more than 0.20 from the base fineness modulus. The base fineness modulus for a source shall be established by the Engineer and may be revised based on current testing results.

(a) Fine Material: Fine aggregate shall contain not more than 3% of material finer than a #200 sieve (75µm), as determined by AASHTO T 11.

(b) Organic Impurities: Fine aggregate subjected to the colorimetric test shall not produce a color darker than Gardner Color Standard No. 11, using AASHTO T 21. If the fine aggregate fails to meet this requirement, the provisions of AASHTO M 6, Section 7.2.3, may apply.

(c) Gradation: Fine aggregate gradation shall be within the ranges listed in Table M.03.01-1 for any source. All fine aggregate proportions shall be approved in advance by the TDC as part of the Mix Design requirements.

(d) Soundness: When tested with magnesium sulfate solution for soundness, using AASHTO T 104, fine aggregate shall not have a loss of more than 10% at the end of 5 cycles. Fine aggregate that fails to meet this requirement, but meets all other requirements, may be allowed for use on a restricted basis with the approval of the Engineer on a case-by-case basis. Typically concrete forming any surface subject to polishing or erosion from running water will not be allowed to contain such material.

(e) Storage: Aggregate stockpiles shall be located on smooth, hard, sloped/well-drained areas. Each source and gradation shall have an individual stockpile or bin. Aggregates shall be handled from stockpiles or other sources to the batching plant in such manner as to minimize segregation of the material. Aggregates that have become segregated, or mixed with earth or foreign material, shall not be used.

Table M.03.01-1 TOTAL % PASSING BY WEIGHT

Sieve Size	3/8" (9.5mm)	No. 4 (4.75mm)	No. 8 (2.36mm)	No. 16 (1.18mm)	No. 30 (600µm)	No. 50 (300µm)	No. 100 (150µm)
Percent Passing	100	95-100	80-100	50-85	25-60	10-30	2-10

3. Cement:

(a) Portland: Types I, II, and III Portland cement shall conform to the requirements of AASHTO M 85. Type I and Type III Portland cement shall be used only when required or expressly permitted by the Project specification or the Engineer. The use of Type I or III will require that these mixtures be submitted as Non-standard Mix Designs. All cement shall be provided by a mill participating in the Departments' Cement Certification program. The requirements of the Certification Program are detailed in the Department's Quality Assurance Program for Materials.

(b) Pre-Blended Cements: Binary or Ternary cements consisting of Portland Cement and supplemental cementitious materials may be used provided that all the requirements of Subarticles M.03.01- 3(a) and -3(c) are met.

(c) Replacement Materials: Unless already approved as a Standard Mix Design, any Contractor proposed Mix Designs with partial replacement of Portland Cement (PC) with fly ash or ground granulated blast furnace slag (GGBFS), shall be submitted in writing to the Engineer for approval prior to the start of work, on a project-by-project basis. The type of material, source, and the percentage of the PC replaced shall be clearly indicated. Upon request, a Certified Test Report for the cement replacement material shall be provided to the Engineer for use during the Mix Design review.

1. Fly Ash: Fly ash to be used as a partial replacement for Portland cement shall meet the requirements of AASHTO M 295, either Class C or Class F, including the uniformity requirements of Table 2A. Loss on Ignition for either class of fly ash shall not exceed 4.0%. Fly ash may be used to replace up to a maximum of 20% of the required Portland cement. The fly ash shall be substituted on a weight (mass) basis, with a minimum of 1 pound (45 kg) of fly ash for 1 pound (45 kg) of Portland cement. Different classes of fly ash or the same class from different sources shall not be permitted on any single project without the written approval of the Engineer.
2. Ground Granulated Blast Furnace Slag (GGBFS): GGBFS used as a partial replacement for Portland cement shall conform to the requirements of AASHTO M 302/ASTM C989, Grade 100 or 120. As determined by the Engineer, GGBFS may be used to replace a maximum of 30% of the required Portland cement. The Engineer may restrict or prohibit the use of GGBFS if ambient temperatures anticipated during the placement and initial curing of the concrete are low. The GGBFS shall be substituted on a weight (mass) basis, with a minimum of 1 pound (45 kg) of slag for 1 pound (45 kg) of Portland cement. Different sources of GGBFS shall not be permitted on any single project without the written approval of the Engineer.

4. Water: All water used in the mixing of concrete shall be clear in appearance and free from oil, salt, acids, alkalis, sugar, and organic matter. Surface water may be used if not taken from shallow or muddy sources; classified as Class C or Class D on the Department of Energy and Environmental Protection (DEEP) Water Quality Classification mapping; and accommodations have been made to prevent contaminants from entering the supply to the satisfaction of the Engineer. The Engineer may request that water from any surface or ground source be tested in accordance with AASHTO T26 and AASHTO D512 if the appearance or scent of the water is suspect. To be acceptable, the pH of the water must not be less than 6.0 or greater than 8.0 and Chloride Ion Concentration of the water must not exceed 250ppm (250 mg/L). Potable water taken directly from a municipal or regional water supply may be used for mixing concrete without testing. Heating or cooling of water may be required to meet mix temperature requirements at time of placement.

5. Admixtures: All admixtures shall perform their function without injurious effects upon the concrete. If requested by the TDC, the Contractor shall present a certified statement from a recognized laboratory attesting to this requirement. A "recognized" laboratory is any cement and concrete laboratory approved and inspected regularly by the Cement and Concrete Reference Laboratory (CCRL). The statement shall contain results of compression tests of cylinder specimens made with concrete utilizing the admixture(s) in proportions equal to those proposed by the Contractor. The results of at least 5 standard 6-inch x 12-inch (150 mm x 300 mm) cylinders of each mix design shall be listed with the results of at least 5 like-sized cylinders not utilizing the admixture(s). Specimens must be made and cured in the laboratory in accordance with AASHTO T 126 and will be tested in accordance with AASHTO T 22.

(a) Air-Entraining Admixtures: In the event that air entrained concrete is required, an admixture conforming to the requirements of AASHTO M 154 may be used. Tests for 7 and 28-day compressive and flexural strengths and resistance to freezing and thawing are required, but tests for bleeding, bond strength and volume change will not be required.

(b) Other Chemical Admixtures: In the event that concrete properties are specified that require the use of additional admixtures, or the Contractor proposes the use of additional admixtures to facilitate placement, the admixtures shall conform to the requirements of AASHTO M194M/M, including the 1 year performance data.

M.03.02 – Mix Design Requirements

1. Standard ConnDOT Mix Designs: Standard Mix Designs shall be designed in accordance with applicable sections of ACI 211 and ACI 318. The mixtures shall consist of Portland cement, fine aggregate, coarse aggregate, admixtures[1], and water proportioned in accordance with Table M.03.02-1. The mixtures shall also be designed to obtain the physical properties of plastic concrete as specified in Article 6.01.03.

Table M.03.02-1

TYPE	28-day Minimum Compressive Strength psi (megapascals)	Water / Cement; or Water / Cement plus other approved Cementitious Material, by weight (mass), Maximum	Minimum Cement[2] Required lbs/cy (kg/cm)	Maximum Aggregate Size Required Section M.01.01
Class "A"	3300 (23)	0.53	615 (365)	No. 4
Class "C"	3300 (23)	0.53	658 (390)	No. 6
Class "F"	4400 (30)	0.44	658 (390)	No. 6
Pavement	3500 (24)	0.49	615 (365)	No. 4
Slope Paving	2200 (15)	0.69	455 (270)	No. 3

[1] Approved admixtures may be used in proportions recommended by the manufacturer.

[2] Portland Cement may be partially replaced within a Standard Mix Design by other approved cementitious material meeting the requirements of Article M.03.01-3(b) if permitted by the Engineer.

Mix designs shall indicate the dosage of admixtures anticipated to provide plastic properties required in the Project specification. Properties of standard classes of concrete in the plastic state are listed in Article 6.01.03

Standard Mix Designs are required to be designed and submitted by the concrete producers, and are approved by the Department on a standing basis. Submittal or re-approval of these Standard Mix Designs on an annual basis is not required. Previously approved producer-designed Standard Mixes that have a record of satisfactory performance may be utilized on Department projects unless there is a change in the gravimetric properties or the sources of any materials. Revisions to the Standard Mix Designs, which include changes in component sources, can be submitted at any time to the TDC, but must be approved prior to use on Department projects.

2. Non-Standard ConnDOT Mix Designs: Any proposed Mix Designs that do not comply with Table M.03.02-1 are required to be submitted 15 days prior to use on a project-by-project basis and be approved by the TDC prior to use. The use of an approved admixture with an otherwise approved Standard Mix Design is not considered non-standard.

All Non-standard Mix Designs used for load-bearing structures shall contain a minimum of 658 lbs/cubic yard (390 kg/cubic meter) of cementitious materials.

Concrete used in applications such as flowable fill or controlled low-strength material may be designed with less than 658 lbs/cubic yard (390 kg/cubic meter) of cementitious materials.

M.03.03 - Producer Equipment and Production Requirements

1. General Requirements: The source of the concrete must be approved by the Engineer prior to use on Department projects. Specifically the location and capacity of the central mix or dry batch plant, and complement of truck mixers/haulers, shall be adequate for continuous placement of concrete on a typical Department project. Approval may be revoked at any time in accordance with Section 1.06.01.

(a) Inspection: The production facility supplying hydraulic cement concrete shall have a current Certification of Ready Mixed Concrete Production Facilities from the National Ready Mixed Concrete Association (NRMCA), or equivalent certification approved by the Engineer.

(b) In addition to the requirements of approved third party certification, the facility shall produce batch tickets that conform to Subarticle 6.01.03-3(a).

(c) Quality Control: The Contractor is responsible for all aspects of Quality Control (QC). As determined by the Engineer, should material delivered to a project not meet specification, the Contractor may be required to submit to the Engineer a corrective procedure for approval within 3 calendar days. The procedure shall address any minor adjustments or corrections made to the equipment or procedures at the facility.

(d) Suspension: As determined by the Engineer, repeated or frequent delivery of deficient material to a Department project may be grounds for suspension of that source of material. A detailed QC plan that describes all QC policies and procedures for that facility may be required to formally address quality issues. This plan must be approved by the Engineer and fully implemented, prior to reinstatement of that facility.

2. Hand Mixed Concrete: Hand mixing shall be permitted only with the permission of the Engineer. Hand mixed batches shall not exceed 1/2 cubic yard (0.5 cubic meter) in volume. Hand mixing will not be permitted for concrete to be placed under water.

M.03.04 - Curing Materials

1. Water: Any water source deemed acceptable by the Engineer for mixing concrete may be used to provide water for curing purposes. Surface water may be used if classified as Class C or Class D on the Department of Energy and Environmental Protection (DEEP) Water Quality Classification mapping and accommodations have been made to prevent contaminants from entering the supply to the satisfaction of the Engineer.

In general, water shall not be taken from shallow or muddy sources. In cases where sources of supply are relatively shallow, the intake pipe shall be enclosed to exclude silt, mud, grass, etc.; and the water in the enclosure shall be maintained at a depth of not less than 2 feet (610 mm) under the intake pipe.

2. Mats: Mats for curing concrete shall be capable of maintaining moisture uniformly on the surface of the concrete. The mats shall not contain any materials such as dyes, sugar, etc., that may be injurious to the concrete.

The length or width of the mats shall be sufficient to cover all concrete surfaces being cured. Should more than one mat be required, sufficient overlap shall be provided by the Contractor as determined by the Engineer.

3. Liquid Membrane-Forming Compound: Liquid membrane-forming compound shall conform to the requirements of AASHTO M 148 Type 2, Class B, or shall be a water-soluble linseed oil-based compound conforming to the requirements of AASHTO M 148, Type 2.

4. White Polyethylene Sheeting (Film): White polyethylene sheeting (film) shall conform to the requirements of AASHTO M 171.

M.03.05 - Non Shrink, Non Staining Grout

1. Bagged (pre-mixed): Bagged (pre-mixed) formulations of non-shrink grout shall meet the requirements of ASTM C 1107. The grout shall be mixed with potable water for use. The grout shall be mixed to a flowable consistency as determined by ASTM C 230. All bagged material shall be clearly marked with the manufacturer's name, date of production, batch number, and written instructions for proper mixing, placement and curing of the product.

2. Bulk: The Contractor may formulate and design a grout mix for use on the Project in lieu of using a pre-bagged product. The Contractor shall obtain prior written approval of the Engineer for any such proposed Mix Design. Any such Mix Design shall include the proportions of hydraulic cement, potable water, fine aggregates, expansive agent, and any other necessary additive or admixture. This material shall meet all of the same chemical and physical requirements as shall the pre-bagged grout, in accordance with ASTM C 1107.

M.03.06 – Expansive Cement for Anchoring

The premixed anchoring cement shall be non-metallic, concrete gray in color and prepackaged. The mix shall consist of hydraulic cement, fine aggregate, expansive admixtures and water conforming to the following requirements:

1. The anchoring cement shall have a minimum 24 hour compressive strength of 2,600 psi (18 megapascals) when tested in accordance with ASTM C 109.

2. The water content of the anchoring cement shall be as recommended by the manufacturer. Water shall conform to the requirements of Subarticle M.03.01-4.

The Contractor shall provide a Certified Test Report and Materials Certificate for the premixed anchoring cement in conformance with Article 1.06.07. The Contractor shall also provide, when requested by the Engineer, samples of the premixed anchoring cement for testing and approval.

M.03.07 – Chemical Anchors

Chemical anchor material must be listed on the Departments' Qualified Products List and approved by the Engineer for the specified use.

The chemical anchor material shall be epoxy or polyester polymer resin. It shall not contain any metals or other products that promote corrosion of steel. The Contractor shall supply the Engineer with a Certified Test Report and Materials Certificate for the chemical anchor material in conformance with Article 1.06.07. When requested by the Engineer, the Contractor shall also provide samples of the chemical anchor material.

M.03.08 – Joint Materials

1. Transverse Joints for Concrete Pavement: Transverse joints shall consist of corrosion resistant load transfer devices, poured joint seal and in addition, in the case of expansion joints, expansion joint filler all conforming to the following requirements:

- **(a)** The corrosion resistant load transfer device shall be coated steel or sleeved steel or be made of corrosion resistant material. The dimensions of any devices used shall be as shown on the plans, exclusive of any coating or sleeving. Core material of coated or sleeved metallic devices shall be steel meeting the requirements of AASHTO M 255M/M 255 Grade 520, or steel having equal or better properties and approved by the Engineer. Nonmetallic devices shall meet the various strength requirements applicable to metallic devices as well as all other requirements stated herein.
- **(b)** All coated load transfer devices shall conform to the requirements of AASHTO M 254. Uncoated or sleeved load transfer devices shall meet the applicable physical requirements of AASHTO M 254. The use of field applied bond breakers will not be permitted.

(c) The basis of acceptance for corrosion resistant load transfer devices shall be the submission by the Contractor of a minimum of 2 samples accompanied by Certified Test Reports conforming to the requirements of Article 1.06.07 demonstrating that the load transfer device conforms to the requirements of AASHTO M 254 for the type of device supplied. The Engineer reserves the right to reject any load transfer device which he deems unsatisfactory for use.

2. **Joint Filler for Concrete Curbing:** Expansion joint filler shall be either preformed expansion joint filler or wood joint filler as indicated on the plans and shall conform to the following requirements:
   (a) Preformed expansion joint filler shall be the bituminous cellular type and shall conform to the requirements of AASHTO M 213.
   (b) Boards for wood joint filler shall have 2 planed sides and shall be redwood, cypress or white pine. Redwood and cypress boards shall be of sound heartwood. White pine boards shall be of sound sapwood. Occasional small, sound knots and medium surface checks will be permitted provided the board is free of any defects that will impair its usefulness for the purpose intended. The joint filler may be composed of more than one length of board in the length of the joint, but no board of a length less than 6 feet (1.9 meters) shall be used; and the separate boards shall be held securely to form a straight joint. Boards composed of pieces that are jointed and glued shall be considered as one board.
   (c) Dimensions shall be as specified or shown on the plans; and tolerances of plus 1/16-inch (1.6 millimeters) thickness, plus 1/8-inch (3.2 millimeters) depth and plus 1/4-inch (6.4 millimeters) length will be permitted.
   (d) All wood joint filler boards shall be given a preservative treatment by brushing with creosote oil conforming to AASHTO M 133. After treatment, the boards shall be stacked in piles, each layer separated from the next by spacers at least 1/4 inch (6.4 millimeters) thick; and the boards shall not be used until 24 hours after treatment. Prior to concreting, all exposed surfaces of the wood filler shall be given a light brush coating of form oil.
   (e) Testing of board expansion joint filler shall be in accordance with pertinent sections of AASHTO T 42.
3. **Longitudinal Joint Devices:** The metal used in the fabrication of longitudinal joint devices shall conform to ASTM requirements for each type of metal used. The dimensions shall be as shown on the plans.
4. **Expansion Joint Fillers for Bridges and Bridge Bearings:**
   (a) Preformed expansion joint filler for bridges shall conform to the requirements of AASHTO M 153, Type I or Type II.
   (b) Pre-molded expansion joint filler for bridge bearings shall conform to the requirements of AASHTO M 33.
5. **Joint Sealants:**
   (a) **Joint Sealer for Pavement:** The joint sealer for pavement shall be a rubber compound of the hot-poured type and shall conform to the requirements of AASHTO M 324 Type II unless otherwise noted on the plans or in the special provisions.
   (b) **Joint Sealer for Structures:** Structure joint sealers shall be one of the following type sealants:
      1. Where "Joint Seal" is specified on the plans, it shall conform to the Federal Specifications SS-S-200-E (Self-leveling type), TT-S-0227E (COM-NBS) Type II-Class A (Non-sag type), or 1 component polyurethane-base elastomeric sealants conforming to FS TT-S-00230C Type II-Class A or an approved equal.

         A Certified Test Report will be required in accordance with Article 1.06.07, certifying the conformance of the sealant to the requirements set forth in the Federal Specification. Should the consignee noted on a Certified Test Report be other than the Prime Contractor, a Materials Certificate shall be required to identify the shipment.

2. Where "Silicone Joint Sealant" is specified on the plans, it shall be one of the following or an approved equal:
   - Sealant, manufactured by the Dow Corning Corporation, Midland, Michigan Dow Corning 888 Silicone Joint Sealant or
   - Dow Corning 888-SL Self-Leveling Silicone Joint 48686-0994

6. **Closed Cell Elastomer:** The closed cell elastomer shall conform to the requirements of ASTM D1056, Grade RE-41 B2. The elastomer shall have a pressure-sensitive adhesive backing on one side.

   The Contractor shall deliver the closed cell elastomer to the job site a minimum of 30 days prior to installation. Prior to the delivery of the closed cell elastomer, the Contractor shall notify the Engineer of the date of shipment and the expected date of delivery. Upon delivery of the closed cell elastomer to the job site, the Contractor shall immediately notify the Engineer.

   Each separate length, roll or container shall be clearly tagged or marked with the manufacturer's name, trademark and lot number. A lot is defined as that amount of closed cell elastomer manufactured at one time from one batch of elastomer. A batch is defined as that amount of elastomer prepared and compounded at one time. The Contractor shall furnish a Certified Test Report in accordance with Article 1.06.07, confirming the conformance of the closed cell elastomer to the requirements set forth in these specifications. Should the co-signee noted on a Certified Test Report be other than the Prime Contractor, a Materials Certificate shall be required to identify shipment.

   The Contractor shall furnish a 1 foot (305 millimeter) length of closed cell elastomer in each lot for purposes of inspection and testing by the Engineer. The Engineer will cut a 1 foot (305 millimeter) sample from each lot and inspect the sample for conformance to size, and perform physical tests on the sample as deemed necessary.

   The Engineer shall reject any lot or portion of a lot that does not conform to the requirements stated herein. A rejected lot or portion of a lot may be resubmitted provided the Contractor has removed or corrected, in a manner acceptable to the Engineer, all non-conforming material.

M.03.09 – Protective Compound/Sealers

The brand and type of material must be listed on the Department's Qualified Products List and approved by the Engineer for the specified use.

M.03.10 – Formwork

1. **Stay-in-place Forms:** Material for stay-in-place metal forms shall be made of zinc-coated (galvanized) steel sheet conforming to ASTM Specification A653 (Structural Steel (SS) Grade 33 through 80). The minimum thickness shall be 20 gage (810 micrometers). Coating weight shall conform to ASTM A924, Class G235, and shall otherwise meet all requirements relevant to steel stay-in-place metal forms and the placing of concrete as specified herein and as noted in the Contract documents.

   Form supports shall either be fabricated and conform to the same material requirements as the forms, or be fabricated from structural steel conforming to the requirements of ASTM A36 and shall be hot-dip galvanized in accordance with ASTM A123.

   Lightweight filler material for forms shall be as recommended by the form manufacturer.
2. **Temporary Forms and Falsework:** Forms and Falsework shall be of wood, steel or other material approved by the Engineer. This approval does not relieve the Contractor from employing adequately sized materials of sufficient rigidity to prevent objectionable distortion of the formed concrete surfaces caused by pressure of the plastic concrete and other loads incidental to the construction operations.

CONNECTICUT
SUPPLEMENTAL SPECIFICATION
SECTION M.04
BITUMINOUS CONCRETE

Delete the entire Section and replace it with the following:

SECTION M.04
BITUMINOUS CONCRETE

M.04.01—Bituminous Concrete Materials and Facilities
M.04.02—Mix Design and Job Mix Formula (JMF)
M.04.03—Production Requirements

M.04.01—Bituminous Concrete Materials and Facilities: Each source of material, and facility or plant used to produce and test bituminous concrete must be qualified on an annual basis by the Engineer. Test Procedures and Specifications referenced herein are in accordance with the latest AASHTO and ASTM Standard Test Procedures and Specifications. Such references when noted with an (M) have been modified by the Engineer and are detailed in Table M.04.03-7.

The Contractor shall submit to the Engineer all sources of coarse aggregate, fine aggregate, mineral filler, PG binder, and if applicable any additives such as but not limited to anti-strip, warm mix, and polymer modifiers. The Contractor shall submit a Safety Data Sheet (SDS) for each grade of binder, and additive to be used on the Project. The Contractor shall not change any material sources without prior approval of the Engineer.

An adequate quantity of each size aggregate, mineral filler, bitumen, and additives, shall be maintained at the bituminous concrete plant site at all times while the plant is in operation to ensure that the plant can consistently produce bituminous concrete mixtures that meet the job mix formula (JMF) as specified in Article M.04.02. The quantity of such material shall be reviewed by the Engineer on an individual plant basis and is dependent upon the plant's daily production capacity. A total quantity of any material on site that amounts to less than one day's production capacity may be cause for the job mix formula to be rejected.

1. Coarse Aggregate:

(a) Requirements: The coarse aggregate shall consist of clean, hard, tough, durable fragments of crushed stone or crushed gravel of uniform quality. Aggregates from multiple sources of supply must not be mixed or stored in the same stockpile.

(b) Basis of Approval: The request for approval of the source of supply shall include a washed sieve analysis in accordance with AASHTO T 27. The Gsa, Gsb, and Pw_a shall be determined in accordance with AASHTO T 85. The coarse aggregate must not contain more than 1% crusher dust, sand, soft disintegrated pieces, mud, dirt, organic and other injurious materials. When tested for abrasion using AASHTO T 96, the aggregate loss must not exceed 40%. When tested for soundness using AASHTO T 104 with a magnesium sulfate solution, the coarse aggregate must not have a loss exceeding 10% at the end of 5 cycles.

For all bituminous mixtures, materials shall also meet the coarse aggregate angularity criteria as specified in Tables M.04.02-2 thru M.04.02-4 for blended aggregates retained on the No. 4 sieve when tested according to ASTM D5821. The amount of aggregate particles of the coarse aggregate blend retained on the No. 4 sieve that are flat and elongated shall be determined in accordance with ASTM D4791 and shall not exceed 10% by weight when tested to a 5:1 ratio, as shown in Tables M.04.02-2 to M.04.02-4.

2. Fine Aggregate:

(a) Requirements: The fine aggregate from each source quarry/pit deposit shall consist of clean, hard, tough, rough-surfaced and angular grains of natural sand; manufactured sand prepared from washed stone screenings; stone screenings, slag or gravel; or combinations thereof, after mechanical screening or manufactured by a

process approved by the Engineer. The Contractor is prohibited from mixing two or more sources of fine aggregate on the ground for the purpose of feeding into a plant.

All fine aggregate shall meet the listed criteria shown in items #1 thru #7 of Table M.04.01-1. Table M.04.01-1 indicates the quality tests and criteria required for all fine aggregate sources. Individually approved sources of supply shall not be mixed or stored in the same stockpile. The fine aggregates must be free from injurious amounts of clay, loam, and other deleterious materials.

For Superpave mixtures, in addition to the above requirements, the fine aggregate angularity shall be determined by testing the materials passing the #8 sieve in accordance with AASHTO T 304, Method A. Qualification shall be based on the criteria listed in Tables M.04.02-2 thru M.04.02-4. The fine aggregate shall also be tested for clay content as a percentage contained in materials finer than the #8 sieve in accordance with AASHTO T 176.

TABLE M.04.01-1
Fine Aggregate Criteria by Pit/Quarry Source

Item	Title	AASHTO Protocol(s)	Criteria
1	Grading	T 27 & T 11	100% Passing 3/8 in 95% Passing No. 4 min.
2	Absorption	T 84	3% maximum
3	Plasticity Limits	T 90	0 or not detectable
4	L.A. Wear	T 96	50% maximum (fine aggregate particle size No. 8 and above)
5	Soundness by Magnesium Sulfate	T 104	20% maximum @ 5 cycles
6	Clay Lumps and Friable Particles	T 112	3% maximum
7	Deleterious Material	As determined by the Engineer	Organic or inorganic calcite, hematite, shale, clay or clay lumps, friable materials, coal-lignite, shells, loam, mica, clinkers, or organic matter (wood, etc.) Shall contain no more than 3% by mass of any individual listed constituent and nor more than 5% by mass in total of all listed constituents
8	Petrographic Analysis	ASTM C295	Terms defined in Section M.04.01-2c

(b) Basis of Approval: A Quality Control Plan for Fine Aggregate (QCPFA) provided by the Contractor shall be submitted for review and approval for each new source documenting how conformance to Items 1 through 7 as shown in Table M.04.01-1 is monitored. The QCPFA must be resubmitted any time the process, location or manner of how the fine aggregate is manufactured changes, or as requested by the Engineer. The QCPFA must include the locations and manufacturing processing methods. The QCPFA for any source may be suspended by the Engineer due to the production of inconsistent material.

The Contractor shall submit all test results to the Engineer for review. The Contractor shall also include a washed sieve analysis in accordance with AASHTO T 27/T 11. Any fine aggregate component or final combined product shall have 100% passing the 3/8 in sieve and a minimum of 95% passing the No. 4 sieve. The Gsa, Gsb, and Pw_a shall be determined in accordance with AASHTO T 84.

The Contractor will be notified by the Engineer if any qualified source of supply fails any portion of Table M.04.01-1. One (1) retest will be allowed for the Contractor to make corrections or changes to the process. If, upon retest, the material does not meet the requirements of Items 1 through 7, additional testing will be required in accordance with Item 8.

(c) The Contractor may provide a petrographic analysis of the material performed by a third party, acceptable to the Engineer, at its' own expense. The Contractor shall submit the results of the analysis with recommended changes to the manufacturing process to the Engineer. The Contractor shall submit fine aggregate samples for testing by the Engineer after the recommended changes have been made.

The Contractor may request the use of such fine aggregate on select project(s) for certain applications of bituminous concrete pavement. Such material will be monitored for a period no less than 48 months, at no cost to the State. Terms of any evaluation and suitable application will be determined by the Engineer.

3. Mineral Filler:

(a) Requirements: Mineral filler shall consist of finely divided mineral matter such as rock dust, including limestone dust, slag dust, hydrated lime, hydraulic cement, or other accepted mineral matter. At the time of use it shall be freely flowing and devoid of agglomerations. Mineral filler shall be introduced and controlled at all times during production in a manner acceptable to the Engineer.

(b) Basis of Approval: The request for approval of the source of supply shall include the location, manufacturing process, handling and storage methods for the material. Mineral filler shall conform to the requirements of AASHTO M 17.

4. Performance Graded Asphalt Binder:

(a) General:

i. Liquid PG binders shall be uniformly mixed and blended and be free of contaminants such as fuel oils and other solvents. Binders shall be properly heated and stored to prevent damage or separation.

ii. The blending at mixing plants of PG binder from different suppliers is strictly prohibited. Contractors who blend PG binders will be classified as a supplier and will be required to certify the binder in accordance with AASHTO R 26(M). The binder shall meet the requirements of AASHTO M 332 and shall be graded or verified in accordance with AASHTO R 29. The Contractor shall submit a Certified Test Report and bill of lading representing each delivery in accordance with AASHTO R 26(M). The Certified Test Report must also indicate the binder specific gravity at 77° F; rotational viscosity at 275° F and 329° F and the mixing and compaction viscosity-temperature chart for each shipment.

iii. The Contractor shall submit the name(s) of personnel responsible for receipt, inspection, and record keeping of PG binder materials. Contractor plant personnel shall document specific storage tank(s) where binder will be transferred and stored until used, and provide binder samples to the Engineer upon request. The person(s) shall assure that each shipment (tanker truck) is accompanied by a statement certifying that the transport vehicle was inspected before loading and was found acceptable for the material shipped and that the binder will be free of contamination from any residual material, along with 2 copies of the bill of lading.

iv. Basis of Approval: The request for approval of the source of supply shall list the location where the material will be manufactured, and the handling and storage methods, along with necessary certification in accordance with AASHTO R 26(M). Only suppliers/refineries that have an approved "Quality Control Plan for Performance Graded Binders" formatted in accordance with AASHTO R 26(M) will be allowed to supply PG binders to Department projects.

(b) Neat Performance Grade (PG) Binder:

i. PG binder shall be classified by the supplier as a "Neat" binder for each lot and be so labeled on each bill of lading. Neat PG binders shall be free from modification with: fillers, extenders, reinforcing agents, adhesion promoters,

thermoplastic polymers, acid modification and other additives such as re-refined motor oil, and shall indicate such information on each bill of lading and certified test report.

ii. The asphalt binder shall be PG 64S-22.

(c) Modified Performance Grade (PG) Binder: Unless otherwise noted, the asphalt binder shall be Performance Grade PG 64E-22 asphalt modified solely with a Styrene-Butadiene-Styrene (SBS) polymer. The polymer modifier shall be added at either the refinery or terminal and delivered to the bituminous concrete production facility as homogenous blend. The stability of the modified binder shall be verified in accordance with ASTM D7173 using the Dynamic Shear Rheometer (DSR). The DSR G*/sin(δ) results from the top and bottom sections of the ASTM D7173 test shall not differ by more than 10%. The results of ASTM D7173 shall be included on the Certified Test Report. The binder shall meet the requirements of AASHTO M 332 (including Appendix X1) and AASHTO R 29.

(d) Warm Mix Additive or Technology:

i. The warm mix additive or technology must be listed on the NEAUPG Qualified Warm Mix Asphalt (WMA) Technologies List at the time of bid, which may be accessed online at http://www.neaupg.uconn.edu/welcome-to-the-neaupg-website/warm-mix-asphalt-wma-information.

ii. The warm mix additive shall be blended with the asphalt binder in accordance with the manufacturer's recommendations.

iii. The blended binder shall meet the requirements of AASHTO M 332 and shall be graded or verified in accordance with AASHTO R 29 for the specified binder grade. The Contractor shall submit a Certified Test Report showing the results of the testing demonstrating the binder grade. In addition, it must include the grade of the virgin binder, the brand name of the warm mix additive, the manufacturer's suggested rate for the WMA additive, the water injection rate (when applicable) and the WMA Technology manufacturer's recommended mixing and compaction temperature ranges.

5. Emulsified Asphalts:

(a) General:

i. Emulsified asphalts shall be homogeneous and be free of contaminants such as fuel oils and other solvents. Emulsions shall be properly stored to prevent damage or separation.

ii. The blending at mixing plants of emulsified asphalts from different suppliers is strictly prohibited. Contractors who blend emulsified asphalts will be classified as a supplier and will be required to certify the emulsion in accordance with AASHTO PP 71. The emulsified asphalt shall meet the requirements of AASHTO M 140(M) or AASHTO M 208 as applicable.

(b) Supplier Approval:

i. The request for approval of the source of supply shall list the location where the material is manufactured, the handling and storage methods, and certifications in accordance with AASHTO PP 71. Only suppliers that have an approved "Quality Control Plan for Emulsified Asphalt" formatted in accordance with AASHTO PP 71 will be allowed to supply emulsified asphalt to Department projects.

ii. The supplier shall submit to the TDC a Certified Test Report representing each lot in accordance with AASHTO PP 71. The Certified Test Report shall include test results for each specified requirement for the grade delivered and shall also indicate the density at 60º F. Additionally, once a month, 1 split sample for each emulsified asphalt grade shall be submitted.

(c) Basis of Approval

i. Each shipment of emulsified asphalt delivered to the Project Site shall be accompanied with the corresponding SDS and Certified Test Report listing Saybolt viscosity, residue by evaporation, penetration of residue, and weight per gallon at 60° F.

ii. Anionic emulsified asphalts shall conform to the requirements of AASHTO M-140(M). Materials used for tack coat shall not be diluted and meet grade RS-1

or RS-1H. When ambient temperatures are 80° F and rising, grade SS-1 or SS-lH may be substituted if permitted by the Engineer.

iii. Cationic emulsified asphalt shall conform to the requirements of AASHTO M-208. Materials used for tack coat shall not be diluted and meet grade CRS-1. The settlement and demulsibility test will not be performed unless deemed necessary by the Engineer. When ambient temperatures are 80° F and rising, grade CSS-1 or CSS-lH may be substituted if permitted by the Engineer.

6. Reclaimed Asphalt Pavement (RAP):

(a) Requirements: RAP shall consist of asphalt pavement constructed with asphalt and aggregate reclaimed by cold milling or other removal techniques approved by the Engineer. For bituminous concrete mixtures containing RAP, the Contractor shall submit a JMF in accordance with Article M.04.02 to the Engineer for review.

(b) Basis of Approval: The RAP material will be accepted on the basis of one of the following criteria:

i. When the source of all RAP material is from pavements previously constructed on Department projects, the Contractor shall provide a materials certificate listing the detailed locations and lengths of those pavements and that the RAP is only from those locations listed.

ii. When the RAP material source or quality is not known, the Contractor shall test the material and provide the following information along with a request for approval to the Engineer at least 30 calendar days prior to the start of the paving operation. The request shall include a material certificate stating that the RAP consists of aggregates that meet the specification requirements of Subarticles M.04.01-1 through M.04.01-3 and that the binder in the RAP is substantially free of solvents, tars and other contaminants. The Contractor is prohibited from using unapproved material on Department projects and shall take necessary action to prevent contamination of approved RAP stockpiles. Stockpiles of unapproved material shall remain separate from all other RAP materials at all times. The request for approval shall include the following:

1. A 50-lb. sample of the RAP to be incorporated into the recycled mixture.
2. A 25-lb. sample of the extracted aggregate from the RAP.
3. A statement that RAP material has been crushed to 100% passing the 1/2 in sieve and remains free from contaminants such as joint compound, wood, plastic, and metals.

7. Crushed Recycled Container Glass (CRCG):

(a) Requirements: The Contractor may propose to use clean and environmentally-acceptable CRCG in an amount not greater than 5% by weight of total aggregate.

(b) Basis of Approval: The Contractor shall submit to the Engineer a request to use CRCG. The request shall state that the CRCG contains no more than 1% by weight of contaminants such as paper, plastic and metal and conform to the following gradation:

CRCG Grading Requirements	
Sieve Size	Percent Passing
3/8 in	100
No. 4	35-100
No. 200	0.0-10.0

8. Joint Seal Material Requirements: Joint seal material shall be a hot-poured rubber compound intended for use in sealing joints and cracks in bituminous concrete pavements. Joint seal material must meet the requirements of ASTM D 6690 – Type 2.

9. Recycled Asphalt Shingles (RAS) Requirements: RAS shall consist of processed asphalt roofing shingles from post-consumer asphalt shingles or from manufactured shingle waste. The RAS material under consideration for use in bituminous concrete mixtures must be certified as being asbestos-free and shall be entirely free of whole, intact nails. The RAS material shall meet the requirements of AASHTO MP 23.

The producer shall test the RAS material to determine the asphalt content and the gradation of the RAS material. The producer shall take necessary action to prevent contamination of RAS stockpiles.

10. Plant Requirements:

(a) Mixing Plant and Machinery: The mixing plant used in the preparation of the bituminous concrete shall comply with AASHTO M 156 for a Batch Plant or a Drum Dryer Mixer Plant, and be approved by the Engineer.

(b) Storage Silos: For all mixes, the Contractor may use silos for short-term storage of Superpave mixtures with prior notification and approval of the Engineer. The storage silo cylinder must have either an internal heating system, or the cone at the bottom must be heated. Prior approval must be obtained for storage times greater than those listed in the table below. When multiple silos are filled, the Contractor shall discharge 1 silo at a time. Simultaneous discharge of multiple silos is not permitted.

Type of silo cylinder	Maximum storage time for all classes (hr)	
	HMA	WMA/PMA
Open Surge	4	Mfg Recommendations
Unheated - Non-insulated	8	Mfg Recommendations
Unheated - Insulated	18	Mfg Recommendations
Heated - No inert gas	TBD by the Engineer	TBD by the Engineer

(c) Documentation System: The mixing plant documentation system shall include equipment for accurately proportioning the components of the mixture by weight and in the proper order, controlling the cycle sequence and timing the mixing operations. Recording equipment shall monitor the batching sequence of each component of the mixture and produce a printed record of these operations on each delivery ticket, as specified herein. Material feed controls shall be automatically or manually adjustable to provide proportions within the tolerances listed below for any batch size.

An asterisk (*) shall be automatically printed next to any individual batch weight(s) exceeding the following tolerances:

Each Aggregate Component	±1.5% of individual or cumulative target weight for each bin
Mineral Filler	±0.5% of the total batch
Bituminous Material	±0.1% of the total batch
Zero Return (Aggregate)	±0.5% of the total batch
Zero Return (Bituminous Material)	±0.1% of the total batch

The entire batching and mixing interlock cut-off circuits shall interrupt and stop the automatic batching operations when an error exceeding the acceptable tolerance occurs in proportioning.

There must be provisions so that scales are not manually adjusted during the printing process. In addition, the system shall be interlocked to allow printing only when the scale has come to a complete rest. A unique printed character (m) shall automatically be printed on the truck and batch plant printout when the automatic batching sequence is interrupted or switched to auto-manual or full manual during proportioning. For each day's production, each project shall be provided a clear, legible copy of these recordings on each delivery ticket.

(d) Aggregates: The Contractor shall ensure that aggregate stockpiles are managed to provide uniform gradation and particle shape, prevent segregation and cross contamination in a manner acceptable to the Engineer. For drum plants only, the Contractor shall determine the percent moisture content at a minimum, prior to production and half way through production.

(e) Mixture: The dry and wet mix times shall be sufficient to provide proper coating (minimum 95% as determined by AASHTO T 195(M)) of all particles with bitumen and produce a uniform mixture.

The Contractor shall make necessary adjustments to ensure all types of bituminous concrete mixtures contain no more than 0.5% moisture throughout when tested in accordance with AASHTO T 329.

(f) RAP: The Contractor shall indicate the percent of RAP, the moisture content (at a minimum determined twice daily, prior to production and halfway through production), and the net dry weight of RAP added to the mixture on each delivery ticket. For each day of production, the production shall conform to the job mix formula and RAP percentage and no change shall be made without the prior approval of the Engineer.

(g) Asphalt Binder: The last day of every month, a binder log shall be submitted when the monthly production for the Department exceeds 5000 tons. Blending of PG binders from different suppliers or grades at the bituminous concrete production facility is strictly prohibited.

(h) Warm mix additive: For mechanically foamed WMA, the maximum water injection rate shall not exceed 2.0% water by total weight of binder and the water injection rate shall be constantly monitored during production.

(i) Field Laboratory: The Contractor shall furnish the Engineer an acceptable field laboratory at the production facility to test bituminous concrete mixtures during production. The field laboratory shall have a minimum of 300 s.f., have a potable water source and drainage, in accordance with the CT Department of Public Health Drinking Water Division, and be equipped with all necessary testing equipment as well as with a PC, printer, and telephone with a dedicated hard-wired phone line. In addition, the PC shall have a high speed internet connection with a minimum upstream of 384 Kbps and a functioning web browser with unrestricted access to https://ctmail.ct.gov. This equipment shall be maintained in clean and good working order at all times and be made available for use by the Engineer.

The laboratory shall be equipped with a suitable heating system capable of maintaining a minimum temperature of 65° F. It shall be clean and free of all materials and equipment not associated with the laboratory. Windows shall be installed to provide sufficient light and ventilation. During summer months adequate cooling or ventilation must be provided so the indoor air temperature shall not exceed the ambient outdoor temperature. Light fixtures and outlets shall be installed at convenient locations, and a telephone shall be within audible range of the testing area. The laboratory shall be equipped with an adequate workbench that has a suitable length, width, and sampling tables, and shall be approved by the Engineer.

The field laboratory testing apparatus, supplies, and safety equipment shall be capable of performing all tests in their entirety that are referenced in AASHTO R 35, *Standard Practice for Superpave Volumetric Design for Hot-Mix Asphalt (HMA)* and AASHTO M 323, *Standard Specification for Superpave Volumetric Mix Design*. In addition, the equipment and supplies necessary to perform the tests must be sufficient to initiate and complete the tests identified in Table M.04.03-3, for the quantity of mixture produced at the facility on a daily basis. The Contractor shall ensure that the Laboratory is adequately supplied at all times during the course of the Project with all necessary testing materials and equipment.

The Contractor shall maintain a list of laboratory equipment used in the acceptance testing processes including but not limited to, balances, scales, manometer/vacuum gauge, thermometers, gyratory compactor, clearly showing calibration and/or inspection dates, in accordance with AASHTO R 18. The Contractor shall notify the Engineer if any modifications are made to the equipment within the field laboratory. The Contractor shall take immediate action to replace, repair, or recalibrate any piece of equipment that is out of calibration, malfunctioning, or not in operation.

M.04.02—Mix design and Job Mix Formula (JMF)

1. Curb Mix:

(a) Requirements: When curb mix is specified, the Contractor shall develop a bituminous concrete mix design that includes a JMF consisting of target values for

gradation, binder content and air voids as shown in Table M.04.02-1. The Contractor may use RAP in 5% increments up to a maximum of 30% provided a new JMF is accepted by the Engineer.

(b) Basis of Approval: The Contractor shall submit to the Engineer a request for approval of the JMF annually in accordance with 1 of the methods described herein. Prior to the start of any paving operations, the JMF must be accepted by the Engineer, and the Contractor must demonstrate the ability to meet the accepted JMF. Additionally, the fraction of material retained between any 2 consecutive sieves shall not be less than 4%.

The Contractor shall test the mixture for compliance with the submitted JMF and Table M.04.02-1. The maximum theoretical density (Gmm) will be determined by AASHTO T 209. If the mixture does not meet the requirements, the JMF shall be adjusted within the ranges shown in Table M.04.02-1 until an acceptable mixture is produced.

An accepted JMF from the previous operating season may be acceptable to the Engineer provided that there are no changes in the sources of supply for the coarse aggregate, fine aggregate, recycled material (if applicable) and the plant operation had been consistently producing acceptable mixture.

The Contractor shall not change sources of supply after a JMF has been accepted. Before a new source of supply for materials is used, a new JMF shall be submitted to the Engineer for approval.

TABLE M.04.02-1:
Master Ranges for Curb Mix Mixtures

Mix	**Curb Mix**	**Production Tolerances from JMF target**
Grade of PG **Binder content %**	**PG 64S-22** **6.5 - 9.0**	**0.4**
Sieve Size		
No. 200	3.0 – 8.0 (b)	2.0
No. 50	10 - 30	4
No. 30	20 - 40	5
No. 8	40 - 70	6
No. 4	65 - 87	7
1/4 in		
3/8 in	95 - 100	8
1/2 in	100	8
3/4 in		8
1 in		
2 in		
Additionally, the fraction of material retained between any 2 consecutive sieves shall not be less than 4%		
Mixture Temperature		
Binder	325°F maximum	
Aggregate	280-350° F	
Mixtures	265-325° F	
Mixture Properties		
VOIDS %	0 – 4.0 (a)	
Notes: (a) Compaction Parameter 50 gyrations (N_{des}) (b) The percent passing the No. 200 sieve shall not exceed the percentage of bituminous asphalt binder determined by AASHTO T 164 or AASHTO T 308.		

2. Superpave Design Method – S0.25, S0.375, S0.5, and S1

(a) Requirements: The Contractor or its representative shall design and submit Superpave mix designs annually for approval. The design laboratory developing the mixes shall be approved by the Engineer. The mix design shall be based on the specified Equivalent Single-Axle Loads (ESAL). Each bituminous concrete mix type must meet the requirements shown in Tables M.04.02-2 to M.04.02-5 and shall be in accordance with AASHTO M 323 and AASHTO R 35. The mix design shall include the nominal maximum aggregate size and a JMF consisting of target values for gradation and bitumen content for each bituminous concrete mix type designated for the Project.

The Contractor shall provide test results with supporting documentation from an AASHTO Materials Reference Laboratory (AMRL) with the use of NETTCP Certified Technicians for the following tests:

i. Aggregate consensus properties for each type & level, as specified in Table M.04.02-3 and the specific gravity data.
ii. Extracted aggregates from RAP aggregate, when applicable, consensus properties for each type & level, as specified in Table M.04.02-3 and the specific gravity data.
iii. New mixes shall be tested in accordance with AASHTO T 283(M) *Standard Method of Test for Resistance of Compacted Hot-Mix Asphalt (HMA) to Moisture-Induced Damage*, (also called Tensile Strength Ratio or TSR). The compacted specimens may be fabricated at a bituminous concrete facility and then tested at an AMRL-accredited facility. The AASHTO T 283(M) test results, specimens, and corresponding JMF sheet (Form MAT-429) shall be submitted by the Contractor for review.

In addition, minimum binder content values apply to all types of bituminous concrete mixtures, as stated in Table M.04.02-5. For mixtures containing RAP, the virgin production and the anticipated proportion of binder contributed by the RAP cannot be less than the total permitted binder content value for that type nor the JMF minimum binder content.

i. Superpave Mixture (virgin): For bituminous concrete mixtures that contain no recycled material, the limits prescribed in Tables M.04.02-2 through Table M.04.02-5 apply. The Contractor shall submit a JMF, on a form provided by the Engineer, with the individual fractions of the aggregate expressed as percentages of the total weight of the mix and the source(s) of all materials, to the Engineer for approval. The JMF shall indicate the corrected target binder content and applicable binder correction factor (ignition oven or extractor) for each mix type by total weight of mix. The mineral filler (dust) shall be defined as that portion of blended mix that passes the No. 200 sieve by weight when tested in accordance with AASHTO T 30. The dust-to-effective asphalt (D/Pbe) ratio shall be between 0.6 and 1.2 by weight. The dry/wet mix times and hot bin proportions (batch plants only) for each type shall be included in the JMF.

   The percentage of aggregate passing each sieve shall be plotted on a 0.45 power gradation chart and shall be submitted for all bituminous concrete mixtures. This chart shall delineate the percentage of material passing each test sieve size as defined by the JMF. The percentage of aggregate passing each standard sieve shall fall within the specified control points as shown in Tables M.04.02-2 through Table M.04.02-5.

   A change in the JMF requires that a new chart be submitted.

ii. Superpave Mixtures with RAP: Use of approved RAP may be allowed with the following conditions:
   - RAP amounts up to 15% may be used with no binder grade modification.
   - RAP amounts up to 20% may be used provided a new JMF is approved by the Engineer. The JMF submittal shall include the grade of virgin binder added. The JMF shall be accompanied by a blending chart and supporting test results in accordance with AASHTO M 323 Appendix X1, or by test results that show the combined binder (recovered binder from the RAP, virgin binder at the mix design proportions, warm mix asphalt additive and

any other modifier if used) meets the requirements of the specified binder grade.

- Two (2) representative samples of RAP shall be obtained. Each sample shall be split, and 1 split sample shall be tested for binder content in accordance with AASHTO T 164 and the other in accordance AASHTO T 308.

Unless approved by the Engineer, RAP material shall not be used with any other recycling option.

iii. Superpave Mixtures with RAS: Use of RAS may be allowed solely in HMA S1 mixtures with the following conditions:
- RAS amounts up to 3% may be used.
- RAS total binder replacement up to 15% may be used with no binder grade modification.
- RAS total binder replacement up to 20% may be used provided a new JMF is approved by the Engineer. The JMF submittal shall include the grade of virgin binder added. The JMF shall be accompanied by a blending chart and supporting test results in accordance to AASHTO M 323 appendix X1 or by test results that show the combined binder (recovered binder from the RAP, virgin binder at the mix design proportions, warm mix asphalt additive and any other modifier if used) meets the requirements of the specified binder grade.
- Superpave Mixtures with RAS shall meet AASHTO PP 78 design considerations. The RAS asphalt binder availability factor (F) used in AASHTO PP 78 Equation 2 shall be 0.85.

iv. Superpave Mixtures with CRCG: In addition to the requirements in M.04.02–2 (a) through (c), for bituminous concrete mixtures that contain CRCG, the Contractor shall submit a materials certificate to the Engineer stating that the CRCG complies with requirements stated in Article M.04.01, as applicable. Additionally, 1% hydrated lime, or other accepted non-stripping agent, shall be added to all mixtures containing CRCG. CRCG material shall not be used with any other recycling option.

(b) Basis of Approval: On an annual basis, the Contractor shall submit to the Engineer any bituminous concrete mix design, and JMF anticipated for use on Department projects. Prior to the start of any paving operations, the mix design and JMF must be approved by the Engineer. Bituminous concrete mixture supplied to the Project without an approved mix design and JMF will be rejected. The following information must be included in the mix design submittal:

i. Gradation, consensus properties and specific gravities of the aggregate, RAP, and RAS.
ii. Average asphalt content of the RAP and RAS by AASHTO T 164.
iii. Source of RAP and RAS and percentage to be used.
iv. Warm mix Technology and manufacturer's recommended additive rate and tolerances.
v. TSR test report, and, if applicable, anti-strip manufacturer and recommended dosage rate.
vi. Mixing and compaction temperature ranges for the mix with and without the warm-mix technology incorporated.
vii. JMF ignition oven correction factor by AASHTO T 308.

The JMF shall be accepted if the Plant mixture and materials meet all criteria as specified in Tables M.04.02-2 through M.04.02-5. If the mixture does not meet the requirements, the Contractor shall adjust the JMF within the ranges shown in Tables M.04.02-2 through M.04.02-5 until an acceptable mixture is produced. All equipment, tests, and computations shall conform to the latest AASHTO R 35 and AASHTO M 323.

Any JMF, once approved, shall only be acceptable for use when it is produced by the designated plant, it utilizes the same component aggregates and binder source, and it continues to meet all criteria as specified herein, and component aggregates are maintained within the tolerances shown in Table M.04.02-2.

The Contractor shall not change any component source of supply including consensus properties after a JMF has been accepted. Before a new source of materials is used, a revised JMF shall be submitted to the Engineer for approval. Any approved JMF applies only to the plant for which it was submitted. Only 1 mix with 1 JMF will be approved for production at a time. Switching between approved JMF mixes with different component percentages or sources of supply is prohibited.

(c) Mix Status: Each facility will have each type of bituminous concrete mixture evaluated based on the previous year of production, for the next construction paving season, as determined by the Engineer. Based on the rating a type of mixture receives will determine whether the mixture can be produced without the completion of a Pre-Production Trial (PPT). Ratings will be provided to each bituminous concrete producer annually prior to the beginning of the paving season.

The rating criteria are based on compliance with Air Voids and Voids in Mineral Aggregate (VMA) as indicated in Table M.04.03-3 *Superpave Master Range for Bituminous Concrete Mixture Production*, and are as follows:

Criteria A: Based on Air Voids. Percentage of acceptance results with passing air voids.

Criteria B: Based on Air Voids and VMA. The percentage of acceptance results with passing VMA, and the percentage of acceptance results with passing air voids, will be averaged.

The final rating assigned will be the lower of the rating obtained with Criteria A or Criteria B.

Ratings are defined as:

"A" – Approved: A rating of "A" is assigned to each mixture type from a production facility with a current rating of 70% passing or greater.

"PPT" – Pre-Production Trial: Rating assigned to each mixture type from a production facility when:

1. there are no passing acceptance production results submitted to the Department from the previous year;
2. there is a source change in one or more aggregate components from the JMF on record by more than 10% by weight;
3. there is a change in RAP percentage;
4. the mixture has a rating of less than 70% from the previous season;
5. it is a new JMF not previously submitted.

Bituminous concrete mixtures rated with a "PPT" cannot be shipped or used on Department projects. A passing "PPT" test shall be performed with NETTCP certified personnel on that type of mixture by the bituminous concrete producer and meet all specifications (Tables M.04.02-2 to M.04.02-5) before production shipment may be resumed.

Contractors that have mix types rated as "PPT" may use one of the following three methods to change the rating to an "A:"

Option A: Schedule a day when a Department inspector can be at the facility to witness a passing "PPT" test or,

Option B: When the Contractor or their representative performs a "PPT" test without being witnessed by an inspector, the Contractor shall submit the test results and a split sample including 2 gyratory molds, 5,000 grams of boxed bituminous concrete for binder and gradation determination, and 5,000 grams of cooled loose bituminous concrete for Gmm determination for verification testing and approval. Passing verifications will designate the bituminous concrete type to be on an "A" status. Failing verifications will require the contractor to submit additional trials.

TABLE M.04.02-2: Superpave Master Range for Bituminous Concrete Mixture Design Criteria

	S0.25		S0.375		S0.5		S1	
Sieve	Control Points(3)		Control Points(3)		Control Points(3)		Control Points(3)	
inches	Min (%)	Max (%)	Min (%)	Max (%)	Min (%)	Max (%)	Min (%)	Max (%)
2.0	-	-	-	-	-	-	-	-
1.5	-	-	-	-	-	-	100	-
1.0	-	-	-	-	-	-	90	100
3/4	-	-	-	-	100	-	-	90
1/2	100	-	100	-	90	100	-	-
3/8	97	100	90	100	-	90	-	-
No. 4	-	90	-	90	-	-	-	-
No. 8	32	67	32	67	28	58	19	45
No. 16	-	-	-	-	-	-	-	-
No. 30								
No. 50								
No. 100								
No. 200	2.0	10.0	2.0	10.0	2.0	10.0	1.0	7.0
Pb(1)	-	-	-	-	-	-	-	-
VMA(2) (%)	16.0 ± 1		16.0 ± 1		15.0 ± 1		13.0 ± 1	
VA (%)	4.0 ± 1		4.0 ± 1		4.0 ± 1		4.0 ± 1	
Gse	JMF value		JMF value		JMF value		JMF value	
Gmm	JMF ± 0.030		JMF ± 0.030		JMF ± 0.030		JMF ± 0.030	
Dust/Pbe(4)	0.6 - 1.2		0.6 - 1.2		0.6 - 1.2		0.6 - 1.2	
Agg. Temp.(5)	280 - 350° F		280 - 350° F		280 - 350° F		280 - 350° F	
Mix Temp.(6)	265-325°F		265-325°F		265-325°F		265-325°F	
Design TSR	≥ 80%		≥ 80%		≥ 80%		≥ 80%	
T-283 Stripping	Minimal as determined by the Engineer							

Notes:

(1) Minimum Pb as specified in Table M.04.02-5.
(2) Voids in Mineral Aggregates shall be computed as specified in AASHTO R 35.
(3) Control point range is also defined as the master range for that mix.
(4) Dust is considered to be the percent of materials passing the No. 200 sieve.
(5) For WMA, lower minimum aggregate temperature will require Engineer's approval.
(6) For WMA and PMA, the mix temperature shall meet manufacturer's recommendations.

Option C: When the Contractor or their representative performs a "PPT" test without being witnessed by a Department inspector, the Engineer may verify the mix in the Contractor's laboratory. Passing verifications will designate the bituminous concrete type to be an "A" status. Failing verifications will require the Contractor to submit additional trials.

When Option A is used and the "PPT" test meets all specifications, the "PPT" test is considered a passing test and the rating for that mix is changed to "A." When the "PPT" test is not witnessed, the "PPT" Option B or C procedure must be followed. If the "PPT" Option B procedure is followed, the mixtures along with the test results must be delivered to the Materials Testing Lab. The test results must meet the "C" tolerances established by the Engineer. The tolerance Table is included in the Department's current QA Program for Materials, Acceptance and Assurance Testing Policies and Procedures.

"U" – No Acceptable Mix Design on File: Rating assigned to a type of mixture that does not have a JMF submitted, or the JMF submitted has not been approved, or is incomplete. A mix design or JMF must be submitted annually, at least 7 days prior to production in order to obtain an "A," or "PPT" status for that mix. A "U" will be used only to designate the mix status until the mix design has been approved, and is accompanied with all supporting data as specified. Bituminous concrete mixtures rated with a "U" cannot be used on Department projects.

TABLE M.04.02-3:
Superpave Master Range for Consensus Properties of Combined Aggregate Structures

Traffic Level	Design ESALs(2) (million) (80kN)	Coarse Aggregate Angularity(1) ASTM D5821(3)	Fine Aggregate Angularity(1) AASHTO T 304(4)	Flat and Elongated Particles(5) ASTM D4791	Sand Equivalent(6) AASHTO T 176
1*	< 0.3	55/- -	40	10	40
2	0.3 to < 3.0	75/- -	40	10	40
3	≥ 3.0	95/90	45	10	45

Notes:
(1) If less than 25% of a given layer is within 4 inches of the anticipated top surface, the layer may be considered to be below 4 inches for mixture design purposes.
(2) Design ESALs are the anticipated project traffic levels expected on the design lane, projected over a 20 year period, regardless of the actual expected design life of the roadway.
(3) Criteria presented as minimum values. 95/90 denotes that a minimum of 95% of the coarse aggregate, by mass, shall have one fractured face and that a minimum of 90% shall have 2 fractured faces.
(4) Criteria presented as minimum percent air voids in loosely compacted fine aggregate passing the No. 8 sieve.
(5) Criteria presented as maximum percent by mass of flat and elongated particles of materials retained on the No. 4 sieve, determined at 5:1 ratio.
(6) Criteria presented as minimum values for fine aggregate passing the No. 8 sieve.

***NOTE: Level 1 for use by Towns and Municipalities ONLY.**

TABLE M.04.02-4:
Superpave Master Range for Traffic Levels and Design Volumetric Properties

Traffic Level	Design ESALs	Number of Gyrations by Superpave Gyratory Compactor			Percent Density of Gmm from HMA/ WMA specimen			Voids Filled with Asphalt (VFA) Based on Nominal mix size - inch			
	(million)	Nini	Ndes	Nmax	Nini	Ndes	Nmax	0.25	0.375	0.5	1
1*	<0.3	6	50	75	≤91.5	96.0	≤98.0	70-80	70-80	70-80	67-80
2	0.3 to <3.0	7	75	115	≤90.5	96.0	≤98.0	65-78	65-78	65-78	65-78
3	≥3.0	8	100	160	≤90.0	96.0	≤98.0	73-76	73-76	65-75	65-75

***NOTE: Level 1 for use by Towns and Municipalities ONLY.**

TABLE M.04.02-5:
Superpave Minimum Binder Content by Mix Type and Level

Mix Type	Level	Binder Content Minimum
S0.25	1*	5.6
S0.25	2	5.5
S0.25	3	5.4
S0.375	1*	5.6
S0.375	2	5.5
S0.375	3	5.4
S0.5	1*	5.0
S0.5	2	4.9
S0.5	3	4.8
S1	1*	4.6
S1	2	4.5
S1	3	4.4

***NOTE: Level 1 for use by Towns and Municipalities ONLY.**

M.04.03—Production Requirements:

1. Standard Quality Control Plan (QCP) for Production: The QCP for production shall describe the organization and procedures which the Contractor shall use to administer quality control. The QCP shall include the procedures used to control the production process, to determine when immediate changes to the processes are needed, and to implement the required changes. The QCP must detail the inspection, sampling and testing protocols to be used, and the frequency for each.

Control Chart(s) shall be developed and maintained for critical aspect(s) of the production process as determined by the Contractor. The control chart(s) shall identify the material property, applicable upper and lower control limits, and be updated with current test data. At a minimum, the following quality characteristics shall be included in the control charts:

- percent passing No. 4 sieve
- percent passing No. 200 sieve
- binder content

- air voids
- Gmm
- VMA

The control chart(s) shall be used as part of the quality control system to document variability of the bituminous concrete production process. The control chart(s) shall be submitted to the Engineer the first day of each month.

The QCP shall also include the name and qualifications of a Quality Control Manager. The Quality Control Manager shall be responsible for the administration of the QCP, including compliance with the plan and any plan modifications.

The Contractor shall submit complete production testing records to the Engineer within 24 hours in a manner acceptable to the Engineer.

The QCP shall also include the name and qualifications of any outside testing laboratory performing any QC functions on behalf of the Contractor. The QCP must also include a list of sampling and testing methods and frequencies used during production, and the names of all Quality Control personnel and their duties.

Approval of the QCP does not imply any warranty by the Engineer that adherence to the plan will result in production of bituminous concrete that complies with these specifications. The Contractor shall submit any changes to the QCP as work progresses.

2. Acceptance Sampling & Testing Methods:

(a) General: Acceptance samples of mixtures shall be obtained from the hauling vehicles and tested by the Contractor at the facility during each day's production.

The Contractor shall submit all acceptance tests results to the Engineer within 24 hours or prior to the next day's production. All acceptance test specimens and supporting documentation must be retained by the Contractor. Verification testing will be performed by the Engineer in accordance with the Department's QA Program for Materials. Labeled Acceptance test specimens shall be retained at the production facilities and may be disposed of with the approval of the Engineer. All Quality Control specimens shall be clearly labeled and separated from the Acceptance specimens.

Should the Department be unable to verify the Contractor's acceptance test result(s) due to a failure of the Contractor to retain acceptance test specimens or supporting documentation, the Contractor shall review its quality control plan, determine the cause of the nonconformance and respond in writing within 24 hours to the Engineer describing the corrective action taken at the plant. In addition, the Contractor must provide supporting documentation or test results to validate the subject acceptance test result(s). The Engineer may invalidate any positive adjustments for material corresponding to the acceptance test(s). Failure by the Contractor to adequately address quality control issues at a facility may result in suspension of production for Department projects at that facility.

Contractor personnel performing acceptance sampling and testing must be present at the facility prior to, during, and until completion of production, and be certified as a NETTCP HMA Plant Technician or Interim HMA Plant Technician and be in good standing. Production of material for use on State projects must be suspended by the Contractor if such personnel are not present.

Technicians found by the Engineer to be non-compliant with NETTCP or Department policies may be removed by the Engineer from participating in the acceptance testing process for Department projects until their actions can be reviewed.

Anytime during production that testing equipment becomes inoperable, production can continue for a maximum of 1 hour. The Contractor shall obtain box sample(s) in accordance with Table M.04.03-2 to satisfy the daily acceptance testing requirement for the quantity shipped to the Project. The box sample(s) shall be tested once the equipment issue has been resolved to the satisfaction of the Engineer. Production beyond 1 hour may be considered by the Engineer. Production will not be permitted beyond that day until the subject equipment issue has been resolved.

(b) Curb Mix Acceptance Sampling and Testing Procedures: Curb Mixes shall be tested by the Contractor at a frequency of 1 test per every 250 tons of cumulative production, regardless of the day of production.

When these mix designs are specified, the following acceptance procedures and AASHTO test methods shall be used:

TABLE M.04.03-1:
Curb Mix Acceptance Test Procedures

Protocol	Reference	Description
1	**AASHTO T 30(M)**	Mechanical Analysis of Extracted Aggregate
2	**AASHTO T 168**	Sampling of Bituminous Concrete
3	**AASHTO T 308**	Binder content by Ignition Oven method (adjusted for aggregate correction factor)
4	**AASHTO T 209(M)**	Theoretical Maximum Specific Gravity and Density of Bituminous Paving Mixtures
5	**AASHTO T 312**	Superpave Gyratory molds compacted to N_{des}
6	**AASHTO T 329**	Moisture Content of Hot-Mix Asphalt (HMA) by Oven Method

i. Determination of Off-Test Status:

1. The test results of AASHTO T 308 and T 30(M) will be used to determine if the mixture is within the tolerances shown in Table M.04.02-1. Curb Mixtures are considered "off test" when the test results indicate that any single value for bitumen content or gradation are not within the tolerances shown in Table M.04.02-1 for that mixture. If the mix is "off test," the Contractor must take immediate actions to correct the deficiency and a new acceptance sample shall be tested on the same day or the following day of production.
2. When multiple plants and silos are located at 1 site, mixture supplied to 1 project is considered as coming from 1 source for the purpose of applying the "off test" status.
3. The Engineer may cease supply from the plant when test results from 3 consecutive samples are not within the JMF tolerances or the test results from 2 consecutive samples not within the master range indicated in Table M.04.02-1 regardless of production date.

ii. JMF Changes

1. If a test indicates that the bitumen content or gradation are outside the tolerances, the Contractor may make a single JMF change as allowed by the Engineer prior to any additional testing. A JMF change shall include the date and name of the Engineer that allowed it. Consecutive test results outside the requirements of Table M.04.02-1 JMF tolerances may result in rejection of the mixture.
2. Any modification to the JMF shall not exceed 50% of the JMF tolerances indicated in Table M.04.02-1 for any given component of the mixture without approval of the Engineer. When such an adjustment is made to the bitumen, the corresponding production percentage of bitumen shall be revised accordingly.

(c) Superpave Mix Acceptance Sampling and Testing Procedures: The hauling vehicle from which samples are obtained shall be selected using stratified – random sampling based on the total estimated tons of production in accordance with ASTM D3665, except that the first test shall be randomly taken from the first 151 tons or as directed by the Engineer. The Engineer may request a second acceptance test within the first sub lot. One (1) acceptance test shall always be performed in the last sub-lot based on actual tons of material produced.

The number of sub lots per acceptance test is based on the total production per day as indicated in Table M.04.03-2. Quantities of the same type and level mix per plant may be combined daily for multiple State projects to determine the number of sub lots. The Engineer may direct that additional acceptance samples be obtained to represent materials actually being delivered to the Project.

The payment adjustment for air voids and liquid binder will be calculated per sub lot as described in Section 4.06.

An acceptance test shall not be performed within 150 tons of production from a previous acceptance test unless approved by the Engineer. Quality Control tests are not subject to this restriction. Unless otherwise tested, a minimum of 1 acceptance test shall be performed for every 4 days of production at a facility for each type and level mix (days of production may or may not be consecutive days).

TABLE M.04.03-2:
Superpave Acceptance Testing Frequency per Type/Level/Plant

Daily quantity produced in tons (lot)	Number of Sub Lots/Tests
0 to 150	0, Unless requested by the Engineer
151 to 600	1
601 to 1,200	2
1,201 to 1,800	3
1,801 or greater	1 per 600 tons or portions thereof

When the Superpave mix design is specified, the following acceptance and AASHTO test procedures shall be used:

TABLE M.04.03-3:
Superpave Acceptance Testing Procedures

Protocol	Reference	Description
1	AASHTO T 168	Sampling of bituminous concrete
2	AASHTO R 47	Reducing samples to testing size
3	AASHTO T 308	Binder content by Ignition Oven method (adjusted for aggregate correction factor)
4	AASHTO T 30	Gradation of extracted aggregate for bituminous concrete mixture
5	AASHTO T 312	(1)Superpave Gyratory molds compacted to N_{des}
6	AASHTO T 166	(2)Bulk specific gravity of bituminous concrete
7	AASHTO R 35	(2)Air voids, VMA
8	AASHTO T 209(M)	Maximum specific gravity of bituminous concrete (average of two tests)
9	AASHTO T 329	Moisture content of Production bituminous concrete

Notes: (1) One (1) set equals 2 each of 6-in molds. Molds to be compacted to Nmax for PPTs and to Ndes for production testing. The first sublot of the year shall be compacted to N_{max}

(2) Average value of 1 set of 6-in molds.

If the average corrected Pb content differs by 0.3% or more from the average bituminous concrete facility production delivery ticket in 5 consecutive tests regardless of the production date (moving average), the Contractor shall immediately investigate, determine an assignable cause and correct the issue. When 2 consecutive moving average differences are 0.3% or more, the Engineer may require a new aggregate correction factor.

The test specimen must be ready to be placed in an approved ignition furnace for testing in accordance with AASHTO T 308 within 30 minutes of being obtained from the hauling vehicle and the test shall start immediately after.

The Contractor shall perform moisture susceptibility (TSR) testing annually for all design levels of HMA-, WMA-, and PMA- S0.5 plant-produced mixtures, in accordance with the latest version of AASHTO T 283(M).

If any material source changes from the previous year, or during the production season, a mix design TSR as well as a production TSR is required for the new mixture. The AASHTO T 283(M) test shall be performed at an AMRL by NETTCP Certified Technicians. The test results and specimens shall be submitted to the Engineer for review. This shall be completed within 30 days from the start of production. Superpave mixtures that require anti-strip additives (either liquid or mineral) shall continue to meet all requirements specified herein for binder and bituminous concrete. The Contractor shall submit the name, manufacturer, percent used, technical datasheet and SDS for the anti-strip additive (if applicable) to the Engineer. In addition, compaction of samples shall be accomplished utilizing an accepted Superpave Gyratory Compactor (SGC), supplied by the Contractor. The SGC shall be located at the facility supplying mixture to the Project.

i. <u>Determination of Off-Test Status:</u>

1. Superpave mixes shall be considered *"off test"* when any Control Point Sieve, VA, VMA, and Gmm values are outside of the limits specified in Table M.04.03-4 and the computed binder content (Pb) established by AASHTO T308 or as documented on the vehicle delivery ticket is below the minimum binder content stated in Table M.04.02-5. Note that further testing of samples or portions of samples not initially tested for this purpose cannot be used to change the status.
2. Any time the bituminous concrete mixture is considered Off-test:
   A. The Contractor shall notify the Engineer (and project staff) when the plant is *"off test"* for a type of mixture. When multiple plants and silos are located at one site, mixture supplied to one project is considered as coming from one source for the purpose of applying the *"off test"* determination.
   B. The Contractor must take immediate actions to correct the deficiency, minimize *"off test"* production to the project, and obtain an additional Process Control (PC) test after any corrective action to verify production is in conformance to the specifications. A PC test will not be used for acceptance and is solely for the use of the Contractor in its quality control process.

ii. <u>Cessation of Supply for Superpave Mixtures with no Payment Adjustment</u>: Production of bituminous concrete shall cease for the Project from any plant that consistently fails to produce mixture that meets the JMF and volumetric properties. The quantity of Superpave mixtures shipped to the Project that is "off-test" will not be adjusted for deficient mixtures.

The Contractor shall cease to supply mixture from a plant when:

1. Bituminous concrete mixture is "off test" on 3 consecutive tests for any combination of VMA or Gmm, regardless of date of production.
2. Bituminous concrete mixture is "off test" on 2 consecutive tests for the Control Point sieves in 1 day's production.

Following cessation, the Contractor shall immediately make necessary material or process corrections and run a Pre-Production Trial (PPT) for that type of mixture. Use of that type of mixture from that plant will be prohibited on the Project until the Contractor has demonstrated the ability to produce acceptable mixture from that facility. When the Contractor has a passing test and has received approval from the Engineer, the use of that mixture to the Project may resume.

iii. Cessation of Supply for Superpave Mixtures with Payment Adjustment: Production of bituminous concrete shall cease for the Project from any plant that consistently fails to produce mixture that meets the Superpave minimum binder content by mix type and level listed in Table M.04.02-5. The quantity of Superpave mixtures shipped to the project that is "off-test" will be adjusted for deficient mixtures in accordance with Section 4.06.

The Contractor shall cease to supply mixture from a plant when:

1. The binder content (Pb) is below the requirements of Table M.04.02-5 on the ignition oven test result after 2 consecutive tests, regardless of the date of production.
2. The air voids (VA) is outside the requirements of Table M.04.03-4 after 3 consecutive tests, regardless of the date of production.

Following cessation, the Contractor shall immediately make necessary material or process corrections and run a Pre-Production Trial (PPT) for that type of mixture. Use of that type of mixture from that plant will be prohibited on the Project until the Contractor has demonstrated the ability to produce acceptable mixture from that facility. When the Contractor has a passing test and has received approval from the Engineer, the use of that mixture to the Project may resume.

iv. JMF Changes for Superpave Mixture Production: It is understood that a JMF change is effective from the time it was submitted forward and is not retroactive to the previous test(s). JMF changes are permitted to allow for trends in aggregate and mix properties but every effort shall be employed by the Contractor to minimize this, to ensure a uniform and dense pavement. A revised JMF submittal shall include the date and name of the Engineer who allowed it.

JMF changes are only permitted prior to or after a production shift for all bituminous-concrete types of mixtures and only when they:

1. Are requested in writing and pre-approved by the Engineer.
2. Are based on a minimum of 2 successful tests.
3. Are documented with a promptly submitted revised JMF on the form provided by the Engineer.
4. A revised JMF submittal shall include the date and name of the Engineer that allowed it.

No change will be made on any aggregate or RAP consensus property or specific gravity unless the test is performed at an AASHTO Materials Reference Laboratory (AMRL) by NETTCP Certified Technicians.

A JMF change shall be submitted every time the plant target RAP or bin percentage deviates by more than 5% or the plant target binder content deviates by more than 0.15% from the active JMF.

TABLE M.04.03-4: Superpave Master Range for Bituminous Concrete Mixture Production

	S0.25		S0.375		S0.5		S1		Tolerances
Sieve	Control Points[4]		Control Points[4]		Control Points[4]		Control Points[4]		**From JMF Targets[4]**
inches	Min (%)	Max (%)	Min (%)	Max (%)	Min (%)	Max (%)	Min (%)	Max (%)	+/- Tolerance
1.5	-	-	-	-	-	-	100	-	
1.0	-	-	-	-	-	-	90	100	
3/4	-	-	-	-	100	-	-	90	
1/2	100	-	100	-	90	100	-	-	
3/8	97	100	90	100	-	90	-	-	
No. 4	-	90	-	90	-	-	-	-	
No. 8	32	67	32	67	28	58	19	45	
No. 16	-	-	-	-	-	-	-	-	
No. 200	2.0	10.0	2.0	10.0	2.0	10.0	1.0	7.0	
Pb[2]	-	-	-	-	-	-	-	-	see note [2]
VMA (%)	16.0		16.0		15.0		13.0		1.0
VA (%)	4.0		4.0		4.0		4.0		1.0
Gmm	JMF value		JMF value		JMF value		JMF value		0.030
Agg. Temp.[5]	280 - 350° F		280 - 350° F		280 - 350° F		280 - 350° F		
Mix Temp.[6]	265-325°F [1]		265-325°F [1]		265-325°F [1]		265-325°F [1]		
Prod. TSR	N/A		N/A		≥80%		N/A		
T-283 Stripping	N/A		N/A		Minimal TBD by the Engineer		N/A		

Notes for TABLE M.04.03-4:

[1] 300° F minimum after October 15.
[2] Minimum Pb as specified in Table M.04.02-5.
[3] Control point range is also defined as the master range for that mix.
[4] JMF tolerances shall be defined as the limits for production compliance. VA & Pb payment is subject to adjustments, as defined in Subarticle 4.06.04-2.
[5] For WMA, lower minimum aggregate temperature will require Engineer's approval.
[6] For WMA or polymer modified asphalt, the mix temperature shall meet manufacturer's recommendations. In addition for WMA the maximum mix temperature shall not exceed 325° F once the WMA technology is incorporated.

TABLE M.04.03-5:
JMF Tolerances for Application of Positive Adjustments

Sieve	**Tolerances**
	From JMF Targets
inches	±Tolerance
3/4	9 (1)
1/2	9 (1)
3/8	9 (2)
No. 4	8
No. 8	7
No. 16	6
No. 200	3
Pb	0.4

Notes:
(1) Only for S1 mixes
(2) Only for S0.5 and S1 mixes

TABLE M.04.03-6:
Superpave Master Range for Traffic Levels and Design Volumetric Properties

Traffic Level	**Design ESALs**	**Number of Gyrations by Superpave Gyratory Compactor**	
	(million)	**Nini**	**Ndes**
1*	< 0.3	6	50
2	0.3 to < 3.0	7	75
3	≥3.0	8	100

***NOTE: Level 1 for use by Towns and Municipalities ONLY.**

Table M.04.03-7:
Modifications to Standard AASHTO and ASTM Test Specifications and Procedures

AASHTO Standard Specification	
Reference	**Modification**
M 140	Emulsified Asphalt grade RS-1H shall meet all the requirements of the emulsified asphalt grade RS-1 except for the penetration requirement of the residue that will change from 100 to 200 penetration units to 40 to 90 penetration units (0.1 mm).
AASHTO Standard Method of Test	
Reference	**Modification**
T 30	Section 7.2 through 7.4 - Samples are not routinely washed for production testing

TABLE M.04.03-7 (continued):
Modifications to Standard AASHTO
and ASTM Test Specifications and Procedures

T 168	Samples are taken at 1 point in the pile. Samples from a hauling vehicle are taken from only 1 point instead of 3 as specified. Selection of Samples: Sampling is equally as important as the testing, and the sampler shall use every precaution to obtain samples that are truly representative of the bituminous mixture. Box Samples: In order to enhance the rate of processing samples taken in the field by Construction or Maintenance personnel, the samples will be tested in the order received and data processed to determine conformance to material specifications and to prioritize inspections by laboratory personnel.
T 195	Section 4.3 only 1 truckload of mixture is sampled. Samples are taken from opposite sides of the load.
T 209	Section 7.2 - The average of 2 bowls is used proportionally in order to satisfy minimum mass requirements. 8.3 - Omit Pycnometer method.
T 283	When foaming technology is used, the material used for the fabrication of the specimens shall be cooled to room temperature, and then reheated to the manufacturer's recommended compaction temperature prior to fabrication of the specimens.
T 331	6.1 Cores are dried to a constant mass prior to testing using a core-dry machine.
R 26	Quality Control Plans must be formatted in accordance with AASHTO R 26, certifying suppliers of performance-graded asphalt binders, Section 9.0, Suppliers Quality Control Plan, and "NEAUPG Model PGAB QC Plan." **1.** The Department requires that all laboratory technician(s) responsible for testing PG-binders be certified or Interim Qualified by NETTCP as a PG Asphalt Binder Lab Technician. **2.** Sampling of asphalt binders shall be done under the supervision of qualified technician. NECTP "Manual of Practice," Chapter 2 Page 2-4 (Key Issues 1-8). **3.** A copy of the Manual of Practice for testing asphalt binders in accordance with the Superpave PG Grading system shall be in the testing laboratory. **4.** All laboratories testing binders for the Department are required to be accredited by the AAMRL. **5.** Sources interested in being approved to supply PG-binders to the Department by use of an "in-line blending system," must record properties of blended material, and additives used. **6.** Each source of supply of PG-binder must indicate that the binders contain no additives used to modify or enhance their performance properties. Binders that are manufactured using additives, modifiers, extenders, etc., shall disclose the type of additive, percentage and any handling specifications or limitations required. **7.** All AASHTO M 320 references shall be replaced with AASHTO M 332. **8.** Each year, in April and September, the supplier shall submit test results for 2 BBR testing at 2 different temperatures in accordance with AASHTO R 29. Suppliers shall provide AASHTO M 332 testing results and split samples at a minimum of 1 per lot.

CONNECTICUT
SUPPLEMENTAL SPECIFICATION
SECTION M.06
METALS

M.06.01 – Reinforcing Steel:

1. Bar Reinforcement:

Delete the third paragraph and replace it with:

"Epoxy coated bar reinforcement shall conform to the requirements of ASTM A615/A615M, Grade 60 (420) and shall be epoxy coated to the requirements of ASTM A775/A775M. All field repairs of the epoxy coating shall meet the requirements of ASTM D3963/D3963M."

M.06.02—Structural Steel and Other Structural Materials:

Delete the entire article and replace it with the following:

"M.06.02—Structural Steel: The materials for this work shall meet the following requirements:

1. Structural Steel:

Structural steel for bridges shall conform to the designation shown on the plans. Unless otherwise indicated in the plans or specifications, structural steel for non-bridge related members or components shall conform to ASTM A709/A709M, Grade 36 (250).

All surfaces of steel plates and shapes used in the fabrication of bridge girders shall be blast cleaned and visually inspected by the Contractor prior to any fabrication or preparation for fabrication. Blast cleaning shall conform to the requirements of SSPC-SP-6-Commercial Blast.

All steel plates and shapes used in the fabrication of bridge girders shall be substantially free from pitting and gouges, regardless of the cause. Substantially free is defined as:

- The measured surface area of all pits and gouges regardless of depth represent less than 1% of the surface area of the plate or shape.
- No pit or gouge greater than 1/32 in (0.08mm) deep.
- No pit or gouge closer than 6 in (15.25 cm) from another.

Any repair of plates or shapes will be performed in accordance with ASTM A6/A 6M.

2. Anchor Bolts:

Unless otherwise designated on the plans, anchor bolts, including suitable nuts and washers, shall meet the following requirements:

Anchor bolt assemblies shall meet the requirements of ASTM F1554, Grade 36 (250). All components of the bolt assembly shall be galvanized in conformance with ASTM A153/A153M.

Certified Test Reports and Material Samples: The Contractor shall submit notarized copies of Certified Test Reports in accordance with Article 1.06.07. Prior to incorporation into the work, the Contractor shall submit samples of the anchor bolt assemblies to the Engineer for testing in accordance with the latest edition of the

"Schedule of Minimum Requirements for Acceptance Testing". One (1) sample shall be submitted for each diameter, material designation, grade or coating of anchor bolt assembly.

3. **High Strength Bolts:** High strength bolts, including suitable nuts and hardened washers, shall meet the following requirements:
   a) High strength bolts shall conform to ASTM A325 or ASTM A490 as shown on the plans. High-strength bolts used with coated steel shall be mechanically galvanized, unless otherwise specified. High-strength bolts used with uncoated weathering grades of steel shall be Type 3.

      Nuts for ASTM A325 bolts shall conform to ASTM A563, grades DH, DH3, C, C3 and D. Where galvanized high-strength bolts are used, the nuts shall be galvanized, heat treated grade DH or DH3. Where Type 3 high-strength bolts are used, the nuts shall be grade C3 or DH3.

      Nuts for ASTM A490 bolts shall conform to the requirements of ASTM A563, grades DH and DH3. Where Type 3 high-strength bolts are used, the nuts shall be grade DH3.

      All galvanized nuts shall be lubricated with a lubricant containing a visible dye of any color that contrasts with the color of the galvanizing. Black bolts must be oily to the touch when delivered and installed.

      Circular flat and square or rectangular beveled, hardened steel washers shall conform to ASTM F436. Unless otherwise specified, galvanized washers shall be furnished when galvanized high-strength bolts are specified, and washers with atmospheric corrosion resistance and weathering characteristics shall be furnished when Type 3 high-strength bolts are specified.

      Compressible-washer-type direct tension indicator washers, used in conjunction with high strength bolts, shall conform to ASTM F959. Where galvanized high-strength bolts are used, the washers shall be galvanized in accordance with ASTM B695, Class 50. Where Type 3 high-strength bolts are used, the washers shall be galvanized in accordance with ASTM B695, Class 50 and coated with epoxy.
   b) **Identifying Marks:** ASTM A325 for bolts and the specifications referenced therein for nuts require that bolts and nuts manufactured to the specification be identified by specific markings on the top of the bolt head and on one face of the nut. Head markings must identify the grade by the symbol "A325", the manufacturer and the type, if Type 2 or 3. Nut markings must identify the grade, the manufacturer and if Type 3, the type. Markings on direct tension indicators must identify the manufacturer and Type "325". Other washer markings must identify the manufacturer and if Type 3, the type.

      ASTM A490 for bolts and the specifications reference therein for nuts require that bolts and nuts manufactured to the specifications be identified by specific markings on the top of the bolt head and on one face of the nut. Head markings must identify the grade by the symbol "A490", the manufacturer and the type, if Type 2 or 3. Nut markings must identify the grade, the manufacturer and if Type 3, the type. Markings on direct tension indicators must identify the manufacturer and Type "490". Other washer markings must identify the manufacturer and if Type 3, the type.
   c) **Dimensions:** Bolt and nuts dimensions shall conform to the requirements for Heavy Hexagon Structural Bolts and for Heavy Semi-Finished Hexagon Nuts given in ANSI Standard B18.2.1 and B18.2.2, respectively.
   d) **Galvanized Bolts:** Galvanized bolts shall conform to ASTM A325, Type 1. The bolts shall be hot-dip galvanized in accordance with ASTM A153, Class C

or mechanically galvanized in accordance with ASTM B695, Class 50. Bolts, nuts, and washers of any assembly shall be galvanized by the same process. The nuts shall be overtapped to the minimum amount required for the fastener assembly, and shall be lubricated with a lubricant containing a visible dye so a visual check can be made for the lubricant at the time of field installation. Galvanized bolts shall be tension tested after galvanizing. ASTM A 490 bolts shall not be galvanized.

e) **Test Requirements:** The maximum hardness of A325 bolts 1" or less in diameter shall be 33 HRC.

Plain, ungalvanized nuts shall have a minimum hardness of 89 HRB.

Proof load tests, in accordance with the requirements of ASTM F606 Method 1, shall be required for the bolts. Wedge tests of full-size bolts are required in accordance with Section 8.3 of ASTM A325. Galvanized bolts shall be wedge tested after galvanizing. Proof load tests of ASTM A563 are required for nuts. Proof load tests for nuts used with galvanized bolts shall be performed after galvanizing, overtapping and lubricating.

Rotational-capacity tests are required and shall be performed on all plain or galvanized (after galvanizing) bolt, nut and washer assemblies by the manufacturer or distributor prior to shipping and by the Contractor at the Site.

The thickness of galvanizing on bolts, nuts and washers shall be measured. On bolts, it shall be measured on the wrench flats or on top of the bolt head, and on nuts it shall be measured on the wrench flats.

f) **Certified Test Reports and Materials Certificates:** The Contractor shall submit notarized copies of Certified Test Reports and Materials Certificates in conformance with Article 1.06.07 for fastener assemblies. In addition the Certified Test Reports and Materials Certificates shall include the following:

a. Mill test reports shall indicate the place where the material was melted and manufactured.
b. Test reports for proof load tests, wedge tests, and rotational-capacity tests shall indicate where the tests were performed, date of tests, location of where the components were manufactured and lot numbers.
c. The test report for galvanized components shall indicate the thickness of the galvanizing.

g) **Material Samples:** Prior to incorporation into the work, the Contractor shall submit samples of the bolt assemblies to the Engineer for testing in accordance with the latest edition of the “Schedule of Minimum Requirements for Acceptance Testing”. Samples shall be submitted for each diameter, length, material designation, grade, coating and manufacturer of bolt assembly.

4. Welded Stud Shear Connectors:

a) **Materials:** Stud shear connectors shall meet the requirements of ASTM A108, cold-drawn bar, Grades 1015, 1018 or 1020, either semi- or fully-killed. If flux-retaining caps are used, the steel for the caps shall be of a low carbon grade suitable for welding and shall comply with ASTM A 109.

Stud shear connectors shall be of a design suitable for electrically end-welding to steel with automatically timed stud welding equipment. The studs shall be of the sizes and dimensions noted on the plans. Flux for welding shall be furnished with each stud, either attached to the end of the stud or combined with the arc shield for automatic application in the welding operation. Each stud shall be furnished with a disposable ferrule of sufficient strength to remain intact during

the welding operation and not crumble or break; it shall not be detrimental to the weld or create excessive slag.

Tensile properties, as determined by tests of bar stock after drawing or of finished studs, shall meet the following requirements in which the yield strength is as determined by the 0.2% offset method:

Tensile strength (min.)	60,000 psi (415 mPa)
Yield strength (min.)	50,000 psi (345 mPa)
Elongation (min.)	20% per 2 in (50 mm)
Reduction of area (min.)	50%

b) Test Methods: Tensile properties shall be determined in accordance with the applicable sections of ASTM A370. Tensile tests of finished studs shall be made on studs welded to test plates using a test fixture similar to that shown in Figure 7.2 of the current AASHTO/AWS D1.5 – Bridge Welding Code. If fracture occurs outside of the middle half of the gage length, the test shall be repeated.

c) Finish: Finished studs shall be of uniform quality and condition, free from injurious laps, fins, seams, cracks, twists, bends or other injurious defects. Finish shall be as produced by cold-drawing, cold-rolling or machining.

d) Certified Test Reports and Materials Certificates: The Contractor shall submit a certified copy of the in-plant quality control test report in accordance with Article 1.06.07. The Contractor shall submit a Materials Certificate in accordance with Article 1.06.07 for the welded studs.

e) Sample Materials for Testing: Prior to incorporation into the work, the Contractor shall submit samples of the stud shear connectors to the Engineer for testing in accordance with the latest edition of the "Schedule of Minimum Requirements for Acceptance Testing." One (1) sample shall be submitted for each diameter and length of welded stud."

CONNECTICUT
SUPPLEMENTAL SPECIFICATION
SECTION M.08
DRAINAGE

Delete the entire Section and replace with the following:

SECTION M.08
DRAINAGE

M.08.01 – Pipe
General
Iron/Steel

1. **Cast Iron Pipe**
2. **Coated Corrugated Metal Pipe and Coated Corrugated Metal Pipe Elbows**
3. **Perforated or Plain Coated Metal Pipe for Underdrains or Outlets**
4. **Coated Corrugated Metal Pipe Arches**
5. **Corrugated Structural Plates and Bolts**
6. **Metal Culvert Ends**

Concrete

7. **Reinforced Concrete Pipe**
8. **Reinforced Concrete Elliptical Pipe**
9. **Perforated Reinforced Concrete Pipe for Underdrains and Outlets**
10. **Slotted Drain Pipe**
11. **Reinforced Concrete Culvert Ends**

Aluminum

12. **Corrugated Aluminum Pipe**
13. **Corrugated Aluminum Pipe for Underdrains and Outlets**
14. **Corrugated Aluminum Pipe Arches**

Sealers/Gaskets

15. **Cold-Applied Bituminous Sealer**
16. **Preformed Plastic Gaskets**
17. **Flexible, Watertight, Rubber-Type Gaskets**

Plastic

18. **Corrugated Polyethylene Pipe**
19. **Geotextiles**
20. **Polyvinyl Chloride Plastic Pipe**
21. **Polyvinyl Chloride Gravity Pipe**

M.08.02 – Catch Basins, Manholes, and Drop Inlets

1. **Brick for Catch Basins, Manholes or Drop Inlets**
2. **Concrete Building Brick for Catch Basins, Manholes or Drop Inlets**
3. **Masonry Concrete Units for Catch Basins, Manholes or Drop Inlets**
4. **Precast Units for Drainage Structures**
5. **Metal for Drainage Structures**

M.08.03 – Aggregates

1. **Bedding Material**
2. **Aggregates for Underdrains**

M.08.01 – Pipe

General

The Contractor shall submit manufacturer's material certifications for all metal and plastic pipes other than PVC, metal pipe-arches, metal fittings and metal coupling bands in accordance with Section 1.06.07.

IRON/STEEL

1. **Cast Iron Pipe:** This material shall meet the requirements of AASHTO M 64 for Extra-Heavy Cast Iron Culvert Pipe.
2. **Coated Corrugated Metal Pipe and Coated Corrugated Metal Pipe Elbows:** This material shall meet the following requirements:

Pipe fabricated from zinc-coated steel sheet and aluminum-coated (Type 2) steel sheet must meet the requirements of AASHTO M 36, Type 1 or IR.

Pipe fabricated from metallic-coated and polymer-precoated steel sheet must meet the requirements of AASHTO M 245, Type 1.

Unless otherwise indicated on the plans, the corrugation size and sheet thickness shall conform to the following:

Nominal Inside Diameter (inches)	Corrugations	Minimum Specified Sheet Thickness (inches)	
6	1 1/2" X 1/4"	.052	
8, 10	1 1/2" X 1/4"	.064	
12, 15, 18 & 21	2 2/3" X 1/2"	.064	
24, 30 , 36	2 2/3" X 1/2"	.079	
42, 48	2 2/3" X 1/2"	.109	
54, 60	3" X 1" or 5” X 1”	.064	
66, 72	3" X 1" or 5” X 1”	.079	
78, 84, 90, & 96	3" X 1" or 5” X 1”	.109	
		Steel	Aluminum
18, 24, 30	Helical Rib ¾” X ¾ “ X 7 ½”	.064	.060
36	Helical Rib ¾” X ¾ “ X 7 ½”	.064	.075
42, 48 & 54	Helical Rib ¾” X ¾ “ X 7 ½”	.079	.105
60, 66, 72, 78, 84	Helical Rib ¾” X ¾ “ X 7 ½”	.109	.135

Aluminum pipe sheet thickness may be 0.004 in less than specified above for 1 1/2-in x 1/4-in, 2 2/3-in x 1/2-in and 3-in x 1-in or 5-in x 1-in corrugations. Helical Rib shall be as specified above.

Zinc coated steel pipe, fittings, and coupling bands shall be coated with bituminous material as specified in AASHTO M 190 Type C. Pipe, fittings and coupling bands

fabricated from aluminum coated steel sheet (Type 2) does not require coating of bituminous material or paved invert.

Metallic-coated and polymer-precoated steel pipe, fittings, and coupling bands shall be coated as specified in AASHTO M 246, Type B. The thicker polymeric coating shall be on the inside of the pipe.

Only one type of coating will be allowed for any continuously connected run of pipe.

If elongation of the pipe is required, it shall be done by the manufacturer.

3. Perforated or Plain Coated Metal Pipe for Underdrains or Outlets: This material shall meet the requirements of AASHTO M 36, Type III or AASHTO M 245, Type III.

(a) Perforations: The minimum diameter of perforations after asphalt coating shall be 1/4 in.

(b) Coating: All requirements of M.08.01-2 shall apply except that the minimum thickness of the bituminous coating on zinc coated steel pipe, fittings, and coupling bands pipe shall be 0.03 in instead of 0.05 in.

4. Coated Corrugated Metal Pipe-Arches: This material shall meet the requirements of AASHTO M 36, Type II, Type IIR or AASHTO M 245, Type II. All coating requirements of M.08.01-1 shall apply.

Unless otherwise indicated on the plans, the corrugation size and sheet thickness shall conform to the following:

Pipe-Arch Equivalent Diameter (Inches)	Corrugations	Minimum Sheet Thickness (Inches)
15, 18, 21	2 2/3" X 1/2"	.064
24, 30	2 2/3" X 1/2"	.079
36, 42, 48	2 2/3" X 1/2"	.109
54, 60	2 2/3" X 1/2"	.138
60, 66, 72	3" X 1" or 5” X 1”	.079
78, 84, 90, 96	3" X 1" or 5” X 1”	.109
18, 21, 24	Helical Rib ¾” X ¾ “ X 7 ½”	.064
30, 36	Helical Rib ¾” X ¾ “ X 7 ½”	.079
42, 48, 54, 60	Helical Rib ¾” X ¾ “ X 7 ½”	.109

5. Corrugated Structural Plates and Bolts: These plates and bolts are for use in the construction of metal pipe of the large diameter and for metal plate arches or pipe arches to be assembled in the field, and they shall meet the requirements of AASHTO M 167 for corrugated metal pipe.

The dimensions of plates and details of fabrication shall meet the requirements of the manufacturer. Where the plans call for a heavier gage for the bottom of the pipe than for the remainder of the pipe circumference, the lower fourth of the circumference shall be the minimum width of the heavier gage material.

The coating shall meet the requirements of AASHTO M 243.

6. Metal Culvert End: The materials used in this work shall meet the pertinent requirements of Articles M.08.01-2 and M.08.01-4.

Bolts and fittings shall meet the requirements of ASTM A307 and shall be galvanized to conform to the requirements of ASTM A153.

The units shall be coated as specified in Articles M.08.01-2, M.08.01-4 or M.08.01-5.

Fabrication: These units shall be formed from a rectangular sheet of metal by cutting and bending to form the desired shape. Two or more sheets may be fastened together by riveting or bolting so as to form a rectangular sheet of the required width. Skirt extensions and a top plate, as needed to complete the unit, shall be separately formed. Skirt extensions shall be riveted or bolted to the skirt.

All edges, which will be exposed above the surface of the ground, shall be reinforced before forming the unit by either of the following means:

(1) The edge shall be bent to form a semicircular roll with an exterior diameter of 1 in, as shown in the detail drawing on the plans.

(2) A split tube of 1 in outside diameter and not lighter than 14 gage, shall be slipped over a row of rivets spaced not more than 6 in apart, as shown in the detail drawing on the plans.

One (1) corrugation, matching the corrugations of the pipe or pipe-arch to which the unit is to be attached, shall be formed in the unit to ensure secure and accurate alignment.

Attachment: The unit may be shop-riveted to a length of the appropriate pipe or pipe-arch, or may be field attached to the pipe or pipe arch by either of the other attachment systems shown on the plans, or by other means acceptable to the Engineer. If the unit is shop-riveted to a length of pipe or pipe-arch, this length shall be sufficient to permit proper use of standard coupling bands.

CONCRETE

7. Reinforced Concrete Pipe: Unless otherwise specified, this material shall conform to the requirements of AASHTO M 170, Class IV, as supplemented and modified by the following:

(a) Reinforcement: In circular pipe, only circular reinforcement will be allowed.

(b) Laps and Welds: The reinforcement shall be lapped not less than 2 in and welded with an electric welding machine.

(c) Quality Assurance Testing: Circular and elliptical reinforced concrete pipe shall be tested by the three-edge bearing method prescribed in AASHTO T 280, except as follows:

1) Modified or special design pipe shall be tested to the 0.01-in load and the ultimate load requirements as per AASHTO M 170 and M 207.

2) At the discretion of the Engineer, pipe of standard design, as specified in AASHTO M 170 and M 207, may be tested to the 0.01-in requirement plus 10% additional load in lieu of ultimate load testing. Test pipe attaining a 0.01-in crack will not be acceptable for use on Department projects.

3) Cores for absorption and determination of steel reinforcement shall be taken on a random basis as determined by the Engineer. The cores shall be at least 6 in diameter.

(d) Inspection: The pipe plant, materials, processes of manufacture and the finished pipe shall be subject to inspection and approval by the Department. The pipe manufacturer's records related to component materials, production and shipment of pipe for Department use shall be made available to the Department on request. The equipment and labor necessary for inspection, sampling and

testing as required by the Department shall be furnished by the pipe manufacturer. Test equipment shall be calibrated at least once each 12 months, or as directed by the Engineer. The plant cement and aggregate scales shall be inspected and sealed by the approved agency at least once every twelve months.

(e) Preliminary Tests and Tests for Extended Deliveries: As directed by the Engineer, the Department shall select for test from the stock of any manufacturer proposing to supply pipe to the Department, 2 of each size pipe up through 30-in diameter and 1 of each size greater than 30-in diameter. These sample pipes shall be tested under Department supervision by the three-edge bearing method. For pipe that fails, it shall be necessary for the manufacturer to either physically isolate the rejected pipe at the plant or to provide some means to clearly indicate the unacceptability of the pipe. Either method shall be performed to the satisfaction of the Engineer. When production is resumed on any size, wall thickness or class previously rejected, preliminary tests shall be required. If 95% of all pipe tested at a particular plant from the first of the calendar year to September 30 meet specifications, including both preliminary and extended tests, it will not be necessary to perform the Fall three-edge bearing tests at this plant.

Use of compression tests on representative cylinders or cores to determine the compressive strength of the concrete incorporated into the pipe products will be at the discretion of the Engineer.

(f) Shipping: Pipe shall not be shipped until it is at least 7 days old unless earlier shipment is authorized by the Engineer on the basis of tests.

(g) Certification: Pipe will be accepted by the Department on the basis of manufacturer's certification. The manufacturer shall certify each shipment of pipe on Department Form MAT-073(PC-1), "Certification of Precast Concrete Products." Two (2) copies of this certification shall be furnished with the shipment to the Engineer at the Project site.

8. Reinforced Concrete Elliptical Pipe: This material shall meet the requirements of AASHTO M 207, Class HE IV and supplemented as follows:

(a) Manufacturing and testing shall conform to Subarticle M.08.01-7.

9. Perforated Reinforced Concrete Pipe for Underdrains and Outlets: This material shall meet the requirements of Subarticle M.08.01-7 and shall be slotted in accordance with AASHTO M 175, Type 2, or as shown on the plans. Pipe for outlets shall not be perforated.

10. Slotted Drain Pipe: The pipe shall be asphalt coated and be as specified in Subarticle M.08.01-2. Concrete shall be as specified in Article M.03.01, Class "A" or pavement type. Concrete shall be cured in accordance with M.03. The inlet aperture shall be longitudinal on top of the pipe and may be continuous or intermittent. The opening in the pipe wall may be fabricated in the form of continuous bar risers and spacers or of intermittent cut-out segments with structural members supporting a continuous grating as indicated in the plans. End caps shall be as provided by the manufacturer.

Elastomeric polymer sealer shall meet the physical requirements of ASTM D3406 and be accepted on manufacturer's certification.

The pipe shall be helically corrugated with a continuous welded or lock seam. Pipe ends shall have 2 rolled annular corrugations on each end for jointing.

Bar Riser and Spacer Type: Riser assemblies shall be fabricated from structural steel, in accordance with the dimensions on the plans. The riser assemblies shall be hot dipped galvanized according to ASTM A123. The assemblies shall be welded to the

corrugated pipe on each side of the riser at the location of the solid web spacers. The riser shall terminate 1 in from the ends of each pipe length to allow clearance for single bolt coupling bands. The ends of the riser shall be closed with a suitable welded plate where solid web spacers do not come to the ends of the riser.

The maximum deviation from straight in both the vertical and horizontal plane of the riser assembly shall not exceed 3/4 in per 20-ft length.

Continuous Grating Type: The cut-out pipe segments shall provide a 2-in wide slot of maximum length between the lock seams. The slot shall be left intact 1 in on each side of the lock seam and this material shall be used to fasten the reinforcing bar in place.

A bent epoxy coated reinforcing bar shall cross the slotted opening on 6-in centers.

The reinforcing bar shall be an ASTM A 615, No. 13, deformed bar epoxy coated with 7 mils of fusion bonded epoxy powder meeting the requirements of AASHTO M 284.

Grating shall be furnished unless noted in the Contract. Grating and all bearing bars, cross bars, and bent connecting bars shall be welding quality, mild carbon steel meeting the requirements of ASTM A569 and shall be the dimensions shown on the plans.

Tie down bolts shall be J-Type bolts, plated, ASTM A307 steel supplied with self-locking nuts.

Concrete forms shall be of cellular foam plastic base, fabricated as an integral part of the pipe and reinforcing bar assembly. The form shall be capped with a thick wood or plastic cap resting on top of the foam plastic and reinforcing bar.

The maximum deviation from straight in both the vertical and horizontal plane of the completed assembly shall not exceed 3/4 in in a 20-ft length. All grating and hardware shall be galvanized in conformance with Article M.06.03. Expansion joint filler shall be as specified in M.03.

11. Reinforced Concrete Culvert End: The barrel shall meet the requirements of AASHTO M 170, Class II, except that the three-edge bearing tests will not be required. The flare shall be of the same thickness and materials as the barrel and shall have steel reinforcement equaling or exceeding the amount shown on the table for the pertinent size.

Tongues and grooves shall be compatible with tongues and grooves of pipe meeting AASHTO M 170, Class IV.

Air entrainment shall be added to these units so as to maintain 5 to 8% entrained air.

ALUMINUM

12. Corrugated Aluminum Pipe: This material shall meet the requirements of AASHTO M 196 Type I or Type IR. Sheet thickness shall meet the requirements of M.08.01-2.

13. Corrugated Aluminum Pipe for Underdrains and Outlets: This material shall meet the requirements of AASHTO M 196, Type III or Type IIIR. Sheet thickness shall meet the requirements of M.08.01-2. Pipe for outlets shall not be perforated.

14. Corrugated Aluminum Pipe Arches: These pipe arches shall meet the requirements of AASHTO M 196, Type II or Type IIR. Sheet thickness shall meet the requirements of M.08.01-4.

SEALERS/GASKETS

15. Cold-Applied Bituminous Sealer: This material, for use in sealing of joints in concrete pipes, shall be free of asbestos and shall meet the following requirements:

It shall be of such consistency that it may be spread on the joints with a trowel when the temperature of the air is between -20° F and 100° F. The bituminous material shall

adhere to the concrete pipe so as to make a watertight seal and shall not flow, crack or become brittle when exposed to the atmosphere.

Unless otherwise specified, sampling shall be done in accordance with AASHTO T 40.

The bituminous sealer shall be delivered to the Project in suitable containers for handling and shall be sealed or otherwise protected from contamination. The container shall show the brand name, net mass or volume, and the requirements for application.

16. Preformed Plastic Gaskets: This material for use in sealing of joints in concrete pipe shall conform to the requirements of ASTM C1478.

17. Flexible, Watertight, Rubber-Type Gaskets: This material for use in sealing concrete pipe joints shall conform to the requirements of ASTM C443.

PLASTIC

18. Corrugated Polyethylene Pipe: Corrugated Polyethylene Pipe, either corrugated interior surface (Type C) or smooth interior surface (Type S) without perforations or with perforations (Type CP or SP), shall meet the requirements of AASHTO M 252 or M 294. Type D pipe shall have a smooth interior surface braced circumferentially or spirally with projections or ribs joined to a smooth outer wall. Both surfaces shall be fused to, or be continuous with, the internal supports. Type D shall meet the requirements of AASHTO M 294.

19. Geotextiles: The geotextile shall be non-rotting, acid and alkali resistant, and have sufficient strength and permeability for the purpose intended including handling and backfilling operations. Fibers shall be low water absorbent. The fiber network must be dimensionally stable and resistant to delamination. The geotextile shall be free of any chemical treatment or coating that will reduce its permeability. The geotextile shall also be free of any flaws or defects which will alter its physical properties. Torn or punctured geotextiles shall not be used. For each specific use, only geotextiles that are already on the Connecticut Department of Transportation's Qualified Products List for the geotextile type will be used. The Engineer reserves the right to reject any geotextile deemed unsatisfactory for a specific use. The brand name shall be labeled on the geotextile or the geotextile container. Geotextiles that are susceptible to damage from sunlight or heat shall be so identified by suitable warning information on the packaging material.

Geotextiles susceptible to sunlight damage shall not be used in any installations where exposure to light will exceed 30 days, unless specifically authorized in writing by the Engineer.

20. Polyvinyl Chloride Plastic Pipe: The pipe shall meet the requirements of ASTM D 1785. Couplings and elbows shall conform to the requirements of ASTM D2466 or D2467.

21. Polyvinyl Chloride Gravity Pipe: This pipe shall meet one of the following specifications: ASTM F789, ASTM F679, or ASTM F794.

M.08.02—Catch Basins, Manholes, and Drop Inlets: The materials to be used in the construction shall meet the following:

1. Brick for Catch Basins, Manholes or Drop Inlets: Brick for catch basins, manholes or drop inlets shall meet the requirements of ASTM C32, except that the depth shall be 2-1/4 in, the width 3-5/8 in, and the length 8 in, and except that the maximum water-absorption by 5-hour boiling shall not exceed the following limits:

Average of 5 bricks	15%
Individual brick	18%

2. Concrete Building Brick for Catch Basins, Manholes or Drop Inlets: Concrete building brick for catch basins, manholes, or drop inlets shall meet the requirements of ASTM C55, Grade S II.

3. Masonry Concrete Units for Catch Basins, Manholes or Drop Inlets: Masonry concrete units for catch basins, manholes, or drop inlets shall meet the requirements of ASTM C139.

4. Precast Units for Drainage Structures: Precast units for drainage structures may be used except where particular conditions require building or casting structures in place.

Fabrication plants shall have a quality control plan approved by the Division Chief of Materials Testing that is demonstrated to the satisfaction of the Engineer. The facility, the quality of materials, the process of fabrication, and the finished precast units shall be subject to inspection by the Engineer.

Precast manholes shall meet the requirements of AASHTO M 199 (ASTM C478).

Circular precast catch basins and drop inlets shall meet the requirements of AASHTO M 199 (ASTM C478) as supplemented below. Rectangular precast catch basins and drop inlets shall meet the requirements of ASTM C913 as supplemented below:

All materials used for concrete shall meet the requirements of Section M.03.

The pertinent provisions of Article 6.01.03 shall apply except that the concrete shall contain 5.0%-8.0% entrained air. Water-absorption of individual cores taken from precast units shall be not more than 7%.

Reinforcement shall meet the requirements of Article M.06.01.

Suitable provision shall be made in casting the units for convenient handling of the completed casting, and additional reinforcement steel shall be provided to allow for such handling in the casting yard and during transportation and placement. Each completed unit shall be identified with the name of manufacturer and date of the concrete pour from which it was cast, either by casting this information into an exposed face of the unit or by suitable stencil. For each day's production of precast units, the fabricator shall mold, cure, and test standard cylinders, or cylinders compacted in a similar manner to the parent precast units, for the purpose of determining the compressive strength of the concrete incorporated into the precast units. Concrete used in molding the cylinders shall be representative of the concrete incorporated into the precast units during the production period. Cylinders shall be molded in accordance with AASHTO T 23, cured by the same method as the units they represent, and tested as prescribed in AASHTO T 22.

The fabricator shall determine the air content of the concrete used in the day's production of precast units by performing tests as prescribed in AASHTO T 152.

The equipment and personnel necessary to perform the required testing shall be furnished by the fabricator and approved by the Engineer. All testing equipment shall be calibrated at least once each 12 months or as directed by the Engineer. The fabricator shall maintain records relative to the production, testing, and shipment of precast units supplied to the Department. Said records shall be available to a representative of the Department upon his request.

The Department may accept precast concrete units on the basis of fabricator’s certification. The fabricator shall certify each shipment of precast concrete units on Department Form MAT 314 (PC-1), "Certification of Precast Concrete Products." Two (2) copies of this certification shall be furnished with the shipment to the Engineer at the Project Site.

Precast units that are cracked, show evidence of honeycomb, or have over 10% of their surface area patched may be subject to rejection, even though meeting other requirements.

5. Metal for Drainage Structures: Metal for catch basins, drop inlet and manhole frames, extensions, covers, and gratings shall be cast iron, cast steel, structural steel or malleable iron meeting the requirements of the plans. Covers and gratings shall bear uniformly on their supports.

Extensions shall be designed so that the existing manhole cover or catch basin grate, when set in place, will have substantially the same bearing, fit, and load carrying capacity as in the existing frame. The extension shall be designed to fit into the original frame, resting specifically on the flange and rim area. The extension shall accept the existing cover or grate so that the cover or grate is seated firmly without movement.

Ladder rungs for manholes shall conform to AASHTO M 199 (ASTM C478).

Cast iron shall meet the requirements of AASHTO M 105, Class 25 for the frames and Class 30 for grates.

Cast steel shall meet the requirements of ASTM A27, Grade optional, and shall be thoroughly annealed.

Structural Steel shall meet the requirements of ASTM A36, or A283, Grade B or better, as to quality and details of fabrication, except that in the chemical composition of the steel, the 2/10 of 1% of copper may be omitted.

Malleable iron shall conform to the requirements of ASTM A47, Grade 22010.

The materials and method of manufacture for drop inlets shall meet the requirements as stated on the plans or as ordered.

M.08.03—Aggregates

1. Bedding Material: Material for pipe bedding shall be sand or sandy soil, all of which passes a 3/8-in sieve and not more than 10% passes a No. 200 sieve.

When ground water is encountered, the Engineer may allow No. 6 stone as specified in Article M.01.01 to be used instead of sand or sandy soil.

2. Aggregates for Underdrains: Materials for filling the trench shall consist of well-graded, clean, non-plastic sands or well-graded, clean, durable broken stone or screened gravel. Unless otherwise noted, the type of material to be used shall be sand.

Sand: This material shall meet the requirements of Subarticle M.03.01-2

Broken Stone or Screened Gravel: This material shall conform to the gradation requirements for Size No. 8 under Article M.01.01.

CONNECTICUT
SUPPLEMENTAL SPECIFICATION
SECTION M.11
MASONRY FACING
CEMENT AND DRY RUBBLE MASONRY
BRICK
MORTAR

M.11.01 – Masonry Facing:

1. **Masonry Facing Stone:**

Delete the third sentence:

"Preferably, the stone shall be from a quarry the product of which is known to be of satisfactory quality."

Delete **"2. : Vacant:"**

M.11.04—Mortar:

Delete the entire article and replace it with the following:

M.11.04—Mortar: Mortar shall be either Pre-blended or Pre-packaged material conforming to:

ASTM C1714 - Standard Specification for Pre-blended Dry Mortar Mix for Unit Masonry;

ASTM C387 - Standard Specification for Packaged, Dry, Combined Materials for Concrete and High Strength Mortar;

or be composed of one part Portland cement and two parts, by volume, of surface dry fine aggregate blended on site.

Hydrated lime, in an amount not to exceed 4 pounds (1.8 kilograms) of lime to each bag of cement, may be added when the material is blended on site at the option of the Engineer. Cement and hydrated lime shall conform to the following requirements:

(a) **Portland cement, Types I, II or IS, and water** shall conform to the requirements of Article M.03.

(b) **Hydrated lime** shall conform to the requirements of ASTM C 6.

When mortar is mixed on the project site, **fine aggregate** shall conform to Grading A or B as indicated in the table below, and to the requirements of Section M.03. For laying stone, precast units, or for shotcrete, fine aggregate shall conform to Grading A. For pointing stone or the precast units and for laying brick or sealing pipe joints, the fine aggregate shall conform to Grading B.

Table of Gradation, Fine Aggregate for Mortar

Square Mesh Sieves	**Grading**	
	A	B
	Percentage Passing by weight (mass)	
Pass 3/8 inch (9.5 millimeters)	100	
Pass #4 (4.75 millimeters)	95-100	
Pass #8 (2.36 millimeters)	80-100	100
Pass #16 (1.18 millimeters)	50-85	
Pass #30 (600 microns)	25-60	
Pass #50 (300 microns)	10-30	10-40
Pass #100 (150 microns)	2-10	0-10

CONNECTICUT
SUPPLEMENTAL SPECIFICATION
SECTION M.13
ROADSIDE DEVELOPMENT

M.13.01—Topsoil:

Delete the entire article and replace it with the following:

" **M.13.01 – Topsoil:** The term topsoil used herein shall mean a soil meeting the soil textural classes established by the USDA Classification System based upon the proportion of sand, silt, and clay size particles after passing a No. 10 (2 millimeter) sieve and subjected to a particle size analysis. The topsoil shall contain 5% to 20% organic matter as determined by loss on ignition of oven-dried samples dried at 221° F (105° C). The pH range of the topsoil shall be 5.5 to 7.0.

The following textural classes shall be acceptable:

Loamy sand, including coarse, loamy fine, and loamy very fine sand, with not more than 80% sand
Sandy loam, including coarse, fine and very fine sandy loam
Loam
Clay loam, with not more than 30% clay
Silt loam, with not more than 60% silt
Sandy clay loam, with not more than 30% clay
All textural classes of topsoil with greater than 80% sand content will be rejected.

The topsoil furnished by the Contractor shall be a natural, workable soil that is screened and free of subsoil, refuse, stumps, roots, brush, weeds, rocks and stones over 1 1/4 inches (30 millimeters) in diameter, and any other foreign matter that would be detrimental to the proper development of plant growth.

The Contractor shall notify the Engineer of the location of the topsoil at least 15 calendar days prior to delivery. The topsoil and its source shall be inspected and approved by the Engineer before the material is delivered to the project. Any material delivered to the project, which does not meet specifications or which has become mixed with undue amounts of subsoil during any operation at the source or during placing and spreading, will be rejected and shall be replaced by the Contractor with acceptable material.

When topsoil is not furnished by the Contractor, it shall be material that is stripped in accordance with Section 2.02 or is furnished by the State, and will be tested as determined by the Engineer.

1. Planting Soil: Soil Material to be used for plant backfill shall be one of the following textural classes:

Loamy sand, with not more than 80% sand
Sandy loam
Loam
Clay loam, with not more than 30% clay
Silt loam, with not more than 60% silt
Sandy clay loam, with not more than 30% clay

Planting soil shall be premixed, consisting of approximately 50 % topsoil, 25 % compost or peat, and 25% native soil. Planting soil shall be loose, friable, and free from refuse, stumps, roots, brush, weeds, rocks and stones 2 inches (50 millimeters) in diameter. In addition, the material shall be free from any material that will prevent proper development and plant growth.

(a) For ericaceous plants and broad-leaved evergreens requiring an acid soil, planting soil shall have a true pH of 4.5 to 5.5. If it has not, it shall be amended by the Contractor at his own expense to the proper pH range by mixing with sulphur.
(b) Planting soil for general planting of nonacid-loving plants shall have a true pH value of 5.6 to 6.5. If it has not, it shall be amended by the Contractor at his own expense to the proper pH range by mixing with dolomitic limestone.

The amount of either sulphur or limestone required to adjust the planting soil to the proper pH range (above) shall be determined by the Engineer based on agronomic tests. The limestone shall conform to the requirements of Article M.13.02. The sulphur shall be commercial or flour sulphur, unadulterated, and shall be delivered in containers with the name of the manufacturer, material, analysis, and net weight (mass) appearing on each container.

The Engineer reserves the right to draw such samples and to perform such tests as he deems necessary to ensure that these specifications are met."

M.13.03 – Fertilizer:

In the last sentence of the first paragraph change "AOAC International." *to* "AOAC."

M.13.04 – Seed Mixture:

Replace Subarticle (a) *with the following:*

"(a) The grass seed mixture shall conform to the following:

Species	Proportion By Weight (Mass) Pounds (kilograms)	Minimum Purity (Percent)	Minimum Germination (Percent)
VELVET BENTGRASS, (AGROSTIS CANINA) CERTIFIED VARIETY: OR EQUAL CERTIFIED VARIETY;	25 (9.1)	96	85
RED FESCUE (FESTUCA RUBRA L. SSP. RUBRA) CERTIFIED VARIETY: OR EQUAL CERTIFIED VARIETY	35 (15.9)	97	80
PARTRIDGE PEA (CHAMAECRISTA FASCICULATA) CERTIFIED VARITEY	10 (4.5)	95	90
INDIAN GRASS (SORGHASTRUM NUTANS) CERTIFIED VARIETY:	15 (5.45)	95	90
CANADA WILDRYE (ELYMUS CANADENSIS) CERTIFIED VARIETY:	5 (2.3)	95	90
KENTUCKY BLUE GRASS (POA PRATENSIS) CERTIFIED VARIETY:	10 (4.5)	95	90

Under no circumstances should annual Ryegrass, Italian Rye, or any other seed be added to the seed mixture."

M.13.06 – Compost:

In the third to last sentence, replace "DEP" *with* "DEEP".

CONNECTICUT
SUPPLEMENTAL SPECIFICATION
SECTION M.16
TRAFFIC CONTROL SIGNALS

M.16.04 – Poles:

1. Steel Poles:

(i) Wire Entrance Fitting:

In the second sentence, delete "required to accept the cables".

M.16.06 – Traffic Signals:

9. Painting:

In the first sentence, replace "MIL" *with* "MILSPEC".

Subsection **Third Coat:**

Replace the first two sentences with the following:

"Dark Green Enamel: Shall be Dark Green exterior baked enamel and shall comply with FS A-A 2962. The color shall be No. 14056, FS No. 595."

and in the third sentence replace "MIL" *with* "MILSPEC".

M.16.08 – Pedestrian Push Button

In the last sentence of the second paragraph, change "Americans With Disabilities Act (ADA)" *to* "ADA".

Subarticle **Painting**
Subsection **Third Coat:**

Delete the entire paragraph and replace it with the following:

"**Third Coat:** Dark Green Enamel, shall be DARK GREEN exterior-baking enamel and shall comply with Federal Specifications A-A 2962. The color shall be No. 14056, Federal Standard No. 595."

M.16.10 – Flasher Cabinet:

1. Cabinet:

In subsection (f), change "Underwriter's Laboratory" *to* "UL".

M.16.15 – Messenger and Span Wire:

Delete the entire article and replace it with the following:

"M.16.15 – Messenger and Span Wire: The materials for this work shall conform to the following requirements:

1. Messenger wire shall be made of double-galvanized 7-strand utilities-grade steel wire cable, not less than 3/16 inch (4.8 millimeters) in diameter, with at least a 2,400-pound (10.7-killinewton) breaking strength.

2. Span wire:

(a) "Span wire" shall be made of double-galvanized 7-strand utilities-grade steel wire cable, not less than 3/8 inch (9.5 millimeters) in diameter, with at least an 11,200-pound (50-kilonewton) breaking strength.

(b) "Span wire (high strength)" shall be made of double-galvanized 7-strand extra-high-strength-grade steel wire cable, not less than 7/16 inch (11.1 millimeters) in diameter, with at least a 20,800-pound (94-kilonewton) breaking strength.

3. All hardware accessories shown on the plans to be used in span wire or messenger mounting shall be made of high-strength, double-galvanized, first-quality materials."

CONNECTICUT
SUPPLEMENTAL SPECIFICATION
SECTION M.17
ELASTOMERIC MATERIALS

M.17.01 – Elastomeric Bearing Pads:

2. Laminae:

In the last sentence of Subsection (a), replace “AAA 6061-T6” *with* “AA 6061-T6”.

4. Adhesive for Bonding:

In the 2nd paragraph of Subsection (b), replace “MS MIL” *with* “MILSPEC”.

CONNECTICUT
SUPPLEMENTAL SPECIFICATION
SECTION M.18
SIGNING

In the list of Articles, change "**M.18.09—Reflective Sheeting**" *to* "**M18.09—Retroreflective Sheeting**"

M.18.07—Delineators:

1. Reflectors:

In the first sentence of the first paragraph, change "reflective" *to* "retroreflective."

In the only sentence of the second paragraph, change "reflective" *to* "retroreflective."

M.18.09—Reflective Sheeting:

Delete the entire article and replace with the following:

"**M.18.09—Retroreflective Sheeting:** Retroreflective sheeting materials shall appear on the Department's Qualified Product List for the application intended and shall be in accordance with ASTM D4956."

M.18.10—Demountable Copy:

2. Type III Reflective Sheeting

*Change the title from "***Type III Reflective Sheeting***" to "***Type IV Retroreflective Sheeting***."*

In the first sentence of the first paragraph, change "reflective" *to* "retroreflective."

In the second sentence of the first paragraph, change "reflective" *to* "retroreflective" *and change "*Section M.18.09.01*" to "*Article M.18.09*."*

***3.* Non-Reflective Plastic Sheeting:**

H. <u>Solvent and Chemical Resistance:</u>

*In the chart under this subsection, replace "*MIL*" with "*MILSPEC*."*

M.18.15—Sign-Mounting Bolts:

Delete the entire article and replace with the following:

"**M.18.15—Sign-Mounting Bolts:** Bolts used for sign-mounting shall be stainless steel and meet the requirements of ASTM F593, Group 1 or 2 (Alloy Types 304 or 316). Locking nuts shall be stainless steel and shall meet the requirements of ASTM F594, Group 1 or 2 (Alloy Types 304 or 316). Washers shall also be stainless steel and shall meet the requirements of ASTM A240 (Alloy Types 304 or 316)."

Construction Contracts - Required Contract Provisions
(State Funded Only Contracts)

Index

1. Title VI of the Civil Rights Act of 1964 / Nondiscrimination Requirements

2. Contractor Work Force Utilization / Specific Equal Employment Opportunity

3. Contract Wage Rates

4. Americans with Disabilities Act of 1990, as Amended

5. Connecticut Statutory Labor Requirements

    a. Construction, Alteration or Repair of Public Works Projects; Wage Rates
    b. Debarment List - Limitation on Awarding Contracts
    c. Construction Safety and Health Course
    d. Awarding of Contracts to Occupational Safety and Health Law Violators Prohibited
    e. Residents Preference in Work on Other Public Facilities (Not Applicable to Federal Aid Contracts)

6. Tax Liability - Contractor's Exempt Purchase Certificate (CERT – 141)

7. Executive Orders (State of CT)

8. Non Discrimination Requirement (pursuant to section 4a-60 and 4a-60a of the Connecticut General Statutes, as revised)

9. Whistleblower Provision

10. Connecticut Freedom of Information Act

    a. Disclosure of Records
    b. Confidential Information

11. Service of Process

12. Substitution of Securities for Retainages on State Contracts and Subcontracts

13. Health Insurance Portability and Accountability Act of 1996 (HIPAA)

14. Forum and Choice of Law

15. Summary of State Ethics Laws

16. Audit and Inspection of Plants, Places of Business and Records

17. Campaign Contribution Restriction

18. Tangible Personal Property

19. Bid Rigging and/or Fraud – Notice to Contractor

20. Consulting Agreement Affidavit

Index of Exhibits

EXHIBIT A – Title VI Contractor Assurances (page 13)
EXHIBIT B – Contractor Work Force Utilization / Equal Employment Opportunity (page 14)
EXHIBIT C – Health Insurance Portability and Accountability Act of 1996 (HIPAA) (page 17)
EXHIBIT D - Campaign Contribution Restriction (page 25)
EXHIBIT E - State Wage Rates (Attached at the end)

1. Title VI of the Civil Rights Act of 1964 / Nondiscrimination Requirements

The Contractor shall comply with Title VI of the Civil Rights Act of 1964 as amended (42 U.S.C. 2000 et seq.), all requirements imposed by the regulations of the United States Department of Transportation (49 CFR Part 21) issued in implementation thereof, and the Title VI Contractor Assurances attached hereto at Exhibit A, all of which are hereby made a part of this Contract.

2. Contractor Work Force Utilization / Equal Employment Opportunity

(a) The Contractor shall comply with the Contractor Work Force Utilization / Equal Employment Opportunity requirements attached at Exhibit B and hereby made part of this Contract, whenever a contractor or subcontractor at any tier performs construction work in excess of $10,000. These goals shall be included in each contract and subcontract. Goal achievement is calculated for each trade using the hours worked under each trade.

(b) Companies with contracts, agreements or purchase orders valued at $10,000 or more will develop and implement an Affirmative Action Plan utilizing the ConnDOT Affirmative Action Plan Guideline. This Plan shall be designed to further the provision of equal employment opportunity to all persons without regard to their race, color, religion, sex or national origin, and to promote the full realization of equal employment opportunity through a positive continuation program. Plans shall be updated as required by ConnDOT.

3. Contract Wage Rates

The Contractor shall comply with:

The State wage rate requirements indicated in Exhibit E hereof are hereby made part of this Contract.

Prevailing Wages for Work on State Highways; Annual Adjustments. With respect to contracts for work on state highways and bridges on state highways, the Contractor shall comply with the provisions of Section 31-54 and 31-55a of the Connecticut General Statutes, as revised.

As required by section 1.05.12 (Payrolls) of the State of Connecticut, Department of Transportation's Standard Specification for Roads, Bridges and Incidental Construction (FORM 816), as may be revised, every Contractor or subcontractor performing project work on a federal aid project is required to post the relevant prevailing wage rates as determined by the United States Secretary of Labor. The wage rate determinations shall be posted in prominent and easily accessible places at the work site.

4. Americans with Disabilities Act of 1990, as Amended

This provision applies to those Contractors who are or will be responsible for compliance with the terms of the Americans with Disabilities Act of 1990, as amended (42 U.S.C. 12101 et seq.), (Act), during the term of the Contract. The Contractor represents that it is familiar with the terms of this Act and that it is in compliance with the Act. Failure of the Contractor to satisfy this standard as the same applies to performance under this Contract, either now or during the term of the Contract as it may be amended, will render the Contract voidable at the option of the State upon notice to the contractor. The Contractor warrants that it will hold the State harmless and indemnify the State from any liability which may be imposed upon the State as a result of any failure of the Contractor to be in compliance with this Act, as the same applies to performance under this Contract.

5. Connecticut Statutory Labor Requirements

(a) Construction, Alteration or Repair of Public Works Projects; Wage Rates. The Contractor shall comply with Section 31-53 of the Connecticut General Statutes, as revised. The wages paid on an hourly basis to any person performing the work of any mechanic, laborer or worker on the work herein contracted to be done and the amount of payment or contribution paid or payable on behalf of each such person to any employee welfare fund, as defined in subsection (i) of section 31-53 of the Connecticut General Statutes, shall be at a rate equal to the rate customary or prevailing for the same work in the same trade or occupation in the town in which such public works project is being constructed. Any contractor who is not obligated by agreement to make payment or contribution on behalf of such persons to any such employee welfare fund shall pay to each mechanic, laborer or worker as part of such person's wages the amount of payment or contribution for such person's classification on each pay day.

(b) Debarment List. Limitation on Awarding Contracts. The Contractor shall comply with Section 3l-53a of the Connecticut General Statutes, as revised.

(c) Construction Safety and Health Course. The Contractor shall comply with section 31-53b of the Connecticut General Statutes, as revised. The contractor shall furnish proof to the Labor Commissioner with the weekly certified payroll form for the first week each employee begins work on such project that any person performing the work of a mechanic, laborer or worker pursuant to the classifications of labor under section 31-53 of the Connecticut General Statutes, as revised, on such public works project, pursuant to such contract, has completed a course of at least ten hours in duration in construction safety and health approved by the federal Occupational Safety and Health Administration or, has completed a new miner training program approved by the Federal Mine Safety and Health Administration in accordance with 30 CFR 48 or, in the case of telecommunications employees, has completed at least ten hours of training in accordance with 29 CFR 1910.268.

Any employee required to complete a construction safety and health course as required that has not completed the course, shall have a maximum of fourteen (14) days to complete the course. If the employee has not been brought into compliance, they shall be removed from the project until such time as they have completed the required training.

Any costs associated with this notice shall be included in the general cost of the contract. In addition, there shall be no time granted to the contractor for compliance with this notice. The contractor's compliance with this notice and any associated regulations shall not be grounds for claims as outlined in Section 1.11 – "Claims".

(d) Awarding of Contracts to Occupational Safety and Health Law Violators Prohibited. The Contract is subject to Section 31-57b of the Connecticut General Statutes, as revised.

(e) Residents Preference in Work on Other Public Facilities. NOT APPLICABLE TO FEDERAL AID CONTRACTS. Pursuant to Section 31-52a of the Connecticut General Statutes, as revised, in the employment of mechanics, laborers or workmen to perform the work specified herein, preference shall be given to residents of the state who are, and continuously for at least six months prior to the date hereof have been, residents of this state, and if no such person is available, then to residents of other states

6. Tax Liability - Contractor's Exempt Purchase Certificate (CERT – 141)

The Contractor shall comply with Chapter 219 of the Connecticut General Statutes pertaining to tangible personal property or services rendered that is/are subject to sales tax. The Contractor is responsible for determining its tax liability. If the Contractor purchases materials or supplies pursuant to the Connecticut Department of Revenue Services' "Contractor's Exempt Purchase Certificate (CERT-141)," as may be revised, the Contractor acknowledges and agrees that title to such materials and supplies installed or placed in the project will vest in the State simultaneously with passage of title from the retailers or vendors thereof, and the Contractor will have no property rights in the materials and supplies purchased.

Forms and instructions are available anytime by:

Internet: Visit the DRS website at www.ct.gov/DRS to download and print Connecticut tax forms; or Telephone: Call 1-800-382-9463 (Connecticut calls outside the Greater Hartford calling area only) and select Option 2 or call 860-297-4753 (from anywhere).

7. Executive Orders

This contract is subject to the provisions of Executive Order No. Three of Governor Thomas J. Meskill, promulgated June 16, 1971, concerning labor employment practices, Executive Order No. Seventeen of Governor Thomas J. Meskill, promulgated February 15, 1973, concerning the listing of employment openings and Executive Order No. Sixteen of Governor John G. Rowland promulgated August 4, 1999, concerning violence in the workplace, all of which are incorporated into and are made a part of the contract as if they had been fully set forth in it. The contract may also be subject to Executive Order No. 14 of Governor M. Jodi Rell, promulgated April 17, 2006, concerning procurement of cleaning products and services and to Executive Order No. 49 of Governor Dannel P. Malloy, promulgated May 22, 2015, mandating disclosure of certain gifts to public employees and contributions to certain candidates for office. If Executive Order No. 14 and/or Executive Order No. 49 are applicable, they are deemed to be incorporated into and are made a part of the contract as if they had been fully set forth in it. At the Contractor's request, the Department shall provide a copy of these orders to the Contractor.

8. Non Discrimination Requirement (pursuant to section 4a-60 and 4a-60a of the Connecticut General Statutes, as revised): References to "minority business enterprises" in this Section are not applicable to Federal-aid projects/contracts. Federal-aid projects/contracts are instead subject to the Federal Disadvantaged Business Enterprise Program.

(a) For purposes of this Section, the following terms are defined as follows:

i. "Commission" means the Commission on Human Rights and Opportunities;
ii. "Contract" and "contract" include any extension or modification of the Contract or contract;
iii. "Contractor" and "contractor" include any successors or assigns of the Contractor or contractor;
iv. "gender identity or expression" means a person's gender-related identity, appearance or behavior, whether or not that gender-related identity, appearance or behavior is different from that traditionally associated with the person's physiology or assigned sex at birth, which gender-related identity can be shown by providing evidence including, but not limited to, medical history, care or treatment of the gender-related identity, consistent and uniform assertion of the gender-related identity or any other evidence that the gender-related identity is sincerely held, part of a person's core identity or not being asserted for an improper purpose.

v. “good faith" means that degree of diligence which a reasonable person would exercise in the performance of legal duties and obligations;

vi. "good faith efforts" shall include, but not be limited to, those reasonable initial efforts necessary to comply with statutory or regulatory requirements and additional or substituted efforts when it is determined that such initial efforts will not be sufficient to comply with such requirements;

vii. "marital status" means being single, married as recognized by the State of Connecticut, widowed, separated or divorced;

viii. "mental disability" means one or more mental disorders, as defined in the most recent edition of the American Psychiatric Association's "Diagnostic and Statistical Manual of Mental Disorders", or a record of or regarding a person as having one or more such disorders;

ix. "minority business enterprise" means any small contractor or supplier of materials fifty-one percent or more of the capital stock, if any, or assets of which is owned by a person or persons: (1) who are active in the daily affairs of the enterprise, (2) who have the power to direct the management and policies of the enterprise, and (3) who are members of a minority, as such term is defined in subsection (a) of Connecticut General Statutes § 32-9n; and

x. “public works contract" means any agreement between any individual, firm or corporation and the State or any political subdivision of the State other than a municipality for construction, rehabilitation, conversion, extension, demolition or repair of a public building, highway or other changes or improvements in real property, or which is financed in whole or in part by the State, including, but not limited to, matching expenditures, grants, loans, insurance or guarantees.

For purposes of this Section, the terms "Contract" and “contract” do not include a contract where each contractor is (1) a political subdivision of the State, including, but not limited to, a municipality, (2) a quasi-public agency, as defined in Conn. Gen. Stat. Section 1-120, (3) any other state, including but not limited to any federally recognized Indian tribal governments, as defined in Conn. Gen. Stat. Section 1-267, (4) the federal government, (5) a foreign government, or (6) an agency of a subdivision, agency, state or government described in the immediately preceding enumerated items (1), (2), (3), (4) or (5).

(b) (1) The Contractor agrees and warrants that in the performance of the Contract such Contractor will not discriminate or permit discrimination against any person or group of persons on the grounds of race, color, religious creed, age, marital status, national origin, ancestry, sex, gender identity or expression, intellectual disability, mental disability or physical disability, including, but not limited to, blindness, unless it is shown by such Contractor that such disability prevents performance of the work involved, in any manner prohibited by the laws of the United States or of the State of Connecticut; and the Contractor further agrees to take affirmative action to insure that applicants with job-related qualifications are employed and that employees are treated when employed without regard to their race, color, religious creed, age, marital status, national origin, ancestry, sex, gender identity or expression, intellectual disability, mental disability or physical disability, including, but not limited to, blindness, unless it is shown by the Contractor that such disability prevents performance of the work involved; (2) the Contractor agrees, in all solicitations or advertisements for employees placed by or on behalf of the Contractor, to state that it is an "affirmative action-equal opportunity employer" in accordance with regulations adopted by the Commission; (3) the Contractor agrees to provide each labor union or representative of workers with which the Contractor has a collective bargaining Agreement or other contract or understanding and each vendor with which the Contractor has a contract or

understanding, a notice to be provided by the Commission, advising the labor union or workers' representative of the Contractor's commitments under this section and to post copies of the notice in conspicuous places available to employees and applicants for employment; (4) the Contractor agrees to comply with each provision of this Section and Connecticut General Statutes §§ 46a-68e and 46a-68f and with each regulation or relevant order issued by said Commission pursuant to Connecticut General Statutes §§ 46a-56, 46a-68e and 46a-68f; and (5) the Contractor agrees to provide the Commission on Human Rights and Opportunities with such information requested by the Commission, and permit access to pertinent books, records and accounts, concerning the employment practices and procedures of the Contractor as relate to the provisions of this Section and Connecticut General Statutes § 46a-56. If the contract is a public works contract, the Contractor agrees and warrants that he will make good faith efforts to employ minority business enterprises as subcontractors and suppliers of materials on such public works projects.

(c) Determination of the Contractor's good faith efforts shall include, but shall not be limited to, the following factors: The Contractor's employment and subcontracting policies, patterns and practices; affirmative advertising, recruitment and training; technical assistance activities and such other reasonable activities or efforts as the Commission may prescribe that are designed to ensure the participation of minority business enterprises in public works projects.

(d) The Contractor shall develop and maintain adequate documentation, in a manner prescribed by the Commission, of its good faith efforts.

(e) The Contractor shall include the provisions of subsection (b) of this Section in every subcontract or purchase order entered into in order to fulfill any obligation of a contract with the State and such provisions shall be binding on a subcontractor, vendor or manufacturer unless exempted by regulations or orders of the Commission. The Contractor shall take such action with respect to any such subcontract or purchase order as the Commission may direct as a means of enforcing such provisions including sanctions for noncompliance in accordance with Connecticut General Statutes §46a-56; provided if such Contractor becomes involved in, or is threatened with, litigation with a subcontractor or vendor as a result of such direction by the Commission, the Contractor may request the State of Connecticut to enter into any such litigation or negotiation prior thereto to protect the interests of the State and the State may so enter.

(f) The Contractor agrees to comply with the regulations referred to in this Section as they exist on the date of this Contract and as they may be adopted or amended from time to time during the term of this Contract and any amendments thereto.

(g) (1) The Contractor agrees and warrants that in the performance of the Contract such Contractor will not discriminate or permit discrimination against any person or group of persons on the grounds of sexual orientation, in any manner prohibited by the laws of the United States or the State of Connecticut, and that employees are treated when employed without regard to their sexual orientation; (2) the Contractor agrees to provide each labor union or representative of workers with which such Contractor has a collective bargaining Agreement or other contract or understanding and each vendor with which such Contractor has a contract or understanding, a notice to be provided by the Commission on Human Rights and Opportunities advising the labor union or workers' representative of the Contractor's commitments under this section, and to post copies of the notice in conspicuous places available to employees and applicants for employment; (3) the Contractor agrees to comply with each provision of this section and with each regulation or relevant order issued by said Commission pursuant to Connecticut General Statutes § 46a-56;

and (4) the Contractor agrees to provide the Commission on Human Rights and Opportunities with such information requested by the Commission, and permit access to pertinent books, records and accounts, concerning the employment practices and procedures of the Contractor which relate to the provisions of this Section and Connecticut General Statutes § 46a-56.

(h) The Contractor shall include the provisions of the foregoing paragraph in every subcontract or purchase order entered into in order to fulfill any obligation of a contract with the State and such provisions shall be binding on a subcontractor, vendor or manufacturer unless exempted by regulations or orders of the Commission. The Contractor shall take such action with respect to any such subcontract or purchase order as the Commission may direct as a means of enforcing such provisions including sanctions for noncompliance in accordance with Connecticut General Statutes § 46a-56; provided, if such Contractor becomes involved in, or is threatened with, litigation with a subcontractor or vendor as a result of such direction by the Commission, the Contractor may request the State of Connecticut to enter into any such litigation or negotiation prior thereto to protect the interests of the State and the State may so enter."

The Nondiscrimination Certifications can be found at the Office of Policy and Management website.

http://www.ct.gov/opm/cwp/view.asp?a=2982&Q=390928

9. Whistleblower Provision

The following clause is applicable if the Contract has a value of Five Million Dollars ($5,000,000) or more.

Whistleblowing. This Contract may be subject to the provisions of Section 4-61dd of the Connecticut General Statutes. In accordance with this statute, if an officer, employee or appointing authority of the Contractor takes or threatens to take any personnel action against any employee of the Contractor in retaliation for such employee's disclosure of information to any employee of the contracting state or quasi-public agency or the Auditors of Public Accounts or the Attorney General under the provisions of subsection (a) of such statute, the Contractor shall be liable for a civil penalty of not more than five thousand dollars for each offense, up to a maximum of twenty per cent of the value of this Contract. Each violation shall be a separate and distinct offense and in the case of a continuing violation, each calendar day's continuance of the violation shall be deemed to be a separate and distinct offense. The State may request that the Attorney General bring a civil action in the Superior Court for the Judicial District of Hartford to seek imposition and recovery of such civil penalty. In accordance with subsection (f) of such statute, each large state contractor, as defined in the statute, shall post a notice of the provisions of the statute relating to large state contractors in a conspicuous place which is readily available for viewing by the employees of the Contractor.

10. Connecticut Freedom of Information Act

(a) Disclosure of Records. This Contract may be subject to the provisions of section 1-218 of the Connecticut General Statutes. In accordance with this statute, each contract in excess of two million five hundred thousand dollars between a public agency and a person for the performance of a governmental function shall (a) provide that the public agency is entitled to receive a copy of records and files related to the performance of the governmental function, and (b) indicate that such records and files are subject to FOIA and may be disclosed by the public agency pursuant to FOIA. No request to inspect or copy such records or files shall be valid unless the request is made to the public agency in accordance with FOIA. Any complaint by a person who is denied the right to inspect or copy such records or files shall be brought to the Freedom of Information Commission in accordance with the provisions of sections 1-205 and 1-206 of the Connecticut General Statutes.

(b) Confidential Information. The State will afford due regard to the Contractor's request for the protection of proprietary or confidential information which the State receives from the Contractor. However, all materials associated with the Contract are subject to the terms of the FOIA and all corresponding rules, regulations and interpretations. In making such a request, the Contractor may not merely state generally that the materials are proprietary or confidential in nature and not, therefore, subject to release to third parties. Those particular sentences, paragraphs, pages or sections that the Contractor believes are exempt from disclosure under the FOIA must be specifically identified as such. Convincing explanation and rationale sufficient to justify each exemption consistent with the FOIA must accompany the request. The rationale and explanation must be stated in terms of the prospective harm to the competitive position of the Contractor that would result if the identified material were to be released and the reasons why the materials are legally exempt from release pursuant to the FOIA. To the extent that any other provision or part of the Contract conflicts or is in any way inconsistent with this section, this section controls and shall apply and the conflicting provision or part shall not be given effect. If the Contractor indicates that certain documentation is submitted in confidence, by specifically and clearly marking the documentation as "CONFIDENTIAL," DOT will first review the Contractor's claim for consistency with the FOIA (that is, review that the documentation is actually a trade secret or commercial or financial information and not required by statute), and if determined to be consistent, will endeavor to keep such information confidential to the extent permitted by law. See, *e.g.*, Conn. Gen. Stat. §1-210(b)(5)(A-B). The State, however, has no obligation to initiate, prosecute or defend any legal proceeding or to seek a protective order or other similar relief to prevent disclosure of any information that is sought pursuant to a FOIA request. Should the State withhold such documentation from a Freedom of Information requester and a complaint be brought to the Freedom of Information Commission, the Contractor shall have the burden of cooperating with DOT in defense of that action and in terms of establishing the availability of any FOIA exemption in any proceeding where it is an issue. In no event shall the State have any liability for the disclosure of any documents or information in its possession which the State believes are required to be disclosed pursuant to the FOIA or other law.

11. Service of Process

The Contractor, if not a resident of the State of Connecticut, or, in the case of a partnership, the partners, if not residents, hereby appoints the Secretary of State of the State of Connecticut, and his successors in office, as agent for service of process for any action arising out of or as a result of this Contract; such appointment to be in effect throughout the life of this Contract and six (6) years thereafter.

12. Substitution of Securities for Retainages on State Contracts and Subcontracts

This Contract is subject to the provisions of Section 3-ll2a of the General Statutes of the State of Connecticut, as revised.

13. Health Insurance Portability and Accountability Act of 1996 (HIPAA)

The Contractor shall comply, if applicable, with the Health Insurance Portability and Accountability Act of 1996 and, pursuant thereto, the provisions attached at Exhibit C, and hereby made part of this Contract.

14. Forum and Choice of Law

Forum and Choice of Law. The parties deem the Contract to have been made in the City of Hartford, State of Connecticut. Both parties agree that it is fair and reasonable for the validity and construction of the Contract to be, and it shall be, governed by the laws and court decisions of the State of Connecticut, without giving effect to its principles of conflicts of laws. To the extent that any immunities provided by Federal law or the laws of the State of Connecticut do not bar an action against the State, and to the extent that these courts are courts of competent jurisdiction, for the purpose of venue, the complaint shall be made returnable to the Judicial District of Hartford only or shall be brought in the United States District Court for the District of Connecticut only, and shall not be transferred to any other court, provided, however, that nothing here constitutes a waiver or compromise of the sovereign immunity of the State of Connecticut. The Contractor waives any objection which it may now have or will have to the laying of venue of any Claims in any forum and further irrevocably submits to such jurisdiction in any suit, action or proceeding.

15. Summary of State Ethics Laws

Pursuant to the requirements of section 1-101qq of the Connecticut General Statutes, the summary of State ethics laws developed by the State Ethics Commission pursuant to section 1-81b of the Connecticut General Statutes is incorporated by reference into and made a part of the Contract as if the summary had been fully set forth in the Contract.

16. Audit and Inspection of Plants, Places of Business and Records

(a) The State and its agents, including, but not limited to, the Connecticut Auditors of Public Accounts, Attorney General and State's Attorney and their respective agents, may, at reasonable hours, inspect and examine all of the parts of the Contractor's and Contractor Parties' plants and places of business which, in any way, are related to, or involved in, the performance of this Contract. For the purposes of this Section, "Contractor Parties" means the Contractor's members, directors, officers, shareholders, partners, managers, principal officers, representatives, agents, servants, consultants, employees or any one of them or any other person or entity with whom the Contractor is in privity of oral or written contract and the Contractor intends for such other person or entity to Perform under the Contract in any capacity.

(b) The Contractor shall maintain, and shall require each of the Contractor Parties to maintain, accurate and complete Records. The Contractor shall make all of its and the Contractor Parties' Records available at all reasonable hours for audit and inspection by the State and its agents.

(c) The State shall make all requests for any audit or inspection in writing and shall provide the Contractor with at least twenty-four (24) hours' notice prior to the requested audit and inspection date. If the State suspects fraud or other abuse, or in the event of an emergency, the State is not obligated to provide any prior notice.

(d) The Contractor shall keep and preserve or cause to be kept and preserved all of its and Contractor Parties' Records until three (3) years after the latter of (i) final payment under this Agreement, or (ii) the expiration or earlier termination of this Agreement, as the same may be modified for any reason. The State may request an audit or inspection at any time during this period. If any Claim or audit is started before the expiration of this period, the Contractor shall retain or cause to be retained all Records until all Claims or audit findings have been resolved.

(e) The Contractor shall cooperate fully with the State and its agents in connection with an audit or inspection. Following any audit or inspection, the State may conduct and the Contractor shall cooperate with an exit conference.

(f) The Contractor shall incorporate this entire Section verbatim into any contract or other agreement that it enters into with any Contractor Party.

17.Campaign Contribution Restriction

For all State contracts, defined in Conn. Gen. Stat. §9-612(f)(1) as having a value in a calendar year of $50,000 or more, or a combination or series of such agreements or contracts having a value of $100,000 or more, the authorized signatory to this contract expressly acknowledges receipt of the State Elections Enforcement Commission's notice advising state contractors of state campaign contribution and solicitation prohibitions, and will inform its principals of the contents of the notice, as set forth in "Notice to Executive Branch State Contractors and Prospective State Contractors of Campaign Contribution and Solicitation Limitations," a copy of which is attached hereto and hereby made a part of this contract, attached as Exhibit D.

18. Tangible Personal Property

(a) The Contractor on its behalf and on behalf of its Affiliates, as defined below, shall comply with the provisions of Conn. Gen. Stat. §12-411b, as follows:

(1) For the term of the Contract, the Contractor and its Affiliates shall collect and remit to the State of Connecticut, Department of Revenue Services, any Connecticut use tax due under the provisions of Chapter 219 of the Connecticut General Statutes for items of tangible personal property sold by the Contractor or by any of its Affiliates in the same manner as if the Contractor and such Affiliates were engaged in the business of selling tangible personal property for use in Connecticut and had sufficient nexus under the provisions of Chapter 219 to be required to collect Connecticut use tax;
(2) A customer's payment of a use tax to the Contractor or its Affiliates relieves the customer of liability for the use tax;
(3) The Contractor and its Affiliates shall remit all use taxes they collect from customers on or before the due date specified in the Contract, which may not be later than the last day of the month next succeeding the end of a calendar quarter or other tax collection period during which the tax was collected;
(4) The Contractor and its Affiliates are not liable for use tax billed by them but not paid to them by a customer; and
(5) Any Contractor or Affiliate who fails to remit use taxes collected on behalf of its customers by the due date specified in the Contract shall be subject to the interest and penalties provided for persons required to collect sales tax under chapter 219 of the general statutes.

(b) For purposes of this section of the Contract, the word "Affiliate" means any person, as defined in section 12-1 of the general statutes, that controls, is controlled by, or is under common control with another person. A person controls another person if the person owns, directly or indirectly, more than ten per cent of the voting securities of the other person. The word "voting security" means a security that confers upon the holder the right to vote for the election of members of the board of directors or similar governing body of the business, or that is convertible into, or entitles the holder to receive, upon its exercise, a security that confers such a right to vote. "Voting security" includes a general partnership interest.

(c) The Contractor represents and warrants that each of its Affiliates has vested in the Contractor plenary authority to so bind the Affiliates in any agreement with the State of Connecticut. The Contractor on its own behalf and on behalf of its Affiliates shall also provide, no later than 30 days after receiving a request by the State's contracting authority, such information as the State may require to ensure, in the State's sole determination, compliance with the provisions of Chapter 219 of the Connecticut General Statutes, including, but not limited to, §12-411b.

19. Bid Rigging and/or Fraud – Notice to Contractor

The Connecticut Department of Transportation is cooperating with the U.S. Department of Transportation and the Justice Department in their investigation into highway construction contract bid rigging and/or fraud.

A toll-free "HOT LINE" telephone number 800-424-9071 has been established to receive information from contractors, subcontractors, manufacturers, suppliers or anyone with knowledge of bid rigging and/or fraud, either past or current. The "HOT LINE" telephone number will be available during normal working hours (8:00 am – 5:00 pm EST). Information will be treated confidentially and anonymity respected.

20. Consulting Agreement Affidavit

The Contractor shall comply with Connecticut General Statutes Section 4a-81(a) and 4a-81(b), as revised. Pursuant to Public Act 11-229, after the initial submission of the form, if there is a change in the information contained in the form, a contractor shall submit the updated form, as applicable, either (i) not later than thirty (30) days after the effective date of such change or (ii) prior to execution of any new contract, whichever is earlier.

The Affidavit/Form may be submitted in written format or electronic format through the Department of Administrative Services (DAS) website.

EXHIBIT A

TITLE VI CONTRACTOR ASSURANCES

During the performance of this Contract, the contractor, for itself, its assignees and successors in interest (hereinafter referred to as the "Contractor") agrees as follows:

1. **Compliance with Regulations:** The Contractor shall comply with the regulations relative to nondiscrimination in federally assisted programs of the United States Department of Transportation (hereinafter, "USDOT"), Title 49, Code of Federal Regulations, Part 21, as they may be amended from time to time (hereinafter referred to as the "Regulations"), which are herein incorporated by reference and made a part of this contract.

2. **Nondiscrimination:** The Contractor, with regard to the work performed by it during the Contract, shall not discriminate on the grounds of race, color, national origin, sex, age, or disability in the selection and retention of subcontractors, including procurements of materials and leases of equipment. The Contractor shall not participate either directly or indirectly in the discrimination prohibited by Subsection 5 of the Regulations, including employment practices when the Contract covers a program set forth in Appendix B of the Regulations.

3. **Solicitations for Subcontracts, Including Procurements of Materials and Equipment:**
In all solicitations either by competitive bidding or negotiation made by the Contractor for work to be performed under a subcontract, including procurements of materials or leases of equipment, each potential subcontractor or supplier shall be notified by the Contractor of the Contractor's obligations under this contract and the Regulations relative to nondiscrimination on the grounds of race, color, national origin, sex, age, or disability.

4. **Information and Reports:** The Contractor shall provide all information and reports required by the Regulations or directives issued pursuant thereto and shall permit access to its books, records, accounts, other sources of information, and its facilities as may be determined by the Connecticut Department of Transportation (ConnDOT) or the Funding Agency (FHWA, FTA and FAA) to be pertinent to ascertain compliance with such Regulations, orders, and instructions. Where any information required of a Contractor is in the exclusive possession of another who fails or refuses to furnish this information, the Contractor shall so certify to ConnDOT or the Funding Agency, as appropriate, and shall set forth what efforts it has made to obtain the information.

5. **Sanctions for Noncompliance:** In the event of the Contractor's noncompliance with the nondiscrimination provisions of this Contract, the ConnDOT shall impose such sanctions as it or the Funding Agency may determine to be appropriate, including, but not limited to:

A. Withholding contract payments until the Contractor is in-compliance; and/or
B. Cancellation, termination, or suspension of the Contract, in whole or in part.

6. **Incorporation of Provisions:** The Contractor shall include the provisions of paragraphs 1 through 5 in every subcontract, including procurements of materials and leases of equipment, unless exempt by the Regulations or directives issued pursuant thereto. The Contractor shall take such action with respect to any subcontract or procurement as the ConnDOT or the Funding Agency may -direct as a means of enforcing such provisions including sanctions for noncompliance. Provided, however, that in the event a Contractor becomes involved in, or is threatened with, litigation with a subcontractor or supplier as a result of such direction, the Contractor may request the ConnDOT to enter into such litigation to protect the interests of the Funding Agency, and, in addition, the Contractor may request the United States to enter into such litigation to protect the interests of the United States

EXHIBIT B

CONTRACTOR WORKFORCE UTILIZATION / EQUAL EMPLOYMENT OPPORTUNITY

1. **Project Workforce Utilization Goals:**
   These goals are applicable to all the Contractor's construction work (whether or not it is Federal or Federally assisted or funded) performed in the covered area. If the contractor performs construction work in a geographical area located outside of the covered area, it shall apply the goals established for the geographical area where the work is actually performed.

   Whenever the Contractor, or any Subcontractor at any tier, subcontracts a portion of the work involving any construction trade, it shall physically include in each subcontract in excess of $10,000 the provisions of these specifications which contain the applicable goals for minority and female participation.

   The goals for minority and female utilization are expressed in percentage terms for the contractor's aggregate work-force in each trade on all construction work in the covered area, are referenced in the Appendix A below.

STATE FUNDED PROJECTS (only)
APPENDIX A
(Labor Market Goals)

LABOR MARKET AREA GOAL				***Minority***
Female				
Bridgeport				**14%**
6.9%				
Ansonia	Beacon Falls	Bridgeport	Derby	
Easton	Fairfield	Milford	Monroe	
Oxford	Seymour	Shelton	Stratford	
Trumbull				
Danbury				**4%**
6.9%				
Bethel	Bridgewater	Brookfield	Danbury	
Kent	New Fairfield	New Milford	Newtown	
Redding	Ridgefield	Roxbury	Sherman	
Washington				
Danielson				**2%**
6.9%				
Brooklyn	Eastford	Hampton	Killingly	
Pomfret	Putnam	Scotland	Sterling	
Thompson	Voluntown	Union	Woodstock	
Hartford				**15%**
6.9%				

Andover	Ashford	Avon	Barkhamsted
Belin	Bloomfield	Bolton	Bristol
Burlington	Canton	Chaplin	Colchester
Columbia	Coventry	Cromwell	Durham
East Granby	East Haddam	East Hampton	East Hartford
East Windsor	Ellington	Enfield	Farmington
Glastonbury	Granby	Haddam	Hartford
Harwinton	Hebron	Lebanon	Manchester
Mansfield	Marlborough	Middlefield	Middletown
Newington	Plainville	Plymouth	Portland
Rocky Hill	Simsbury	Somers	South Windsor
Southington	Stafford	Suffield	Tolland
Vernon	West Hartford	Wethersfield	Willington
Winchester	Windham	Windsor	Windsor Locks

Lower River **2%**
6.9%

Chester	Deep River	Essex	Old Lyme
Westbrook			

New Haven **14%**
6.9%

Bethany	Branford	Cheshire	Clinton
East Haven	Guilford	Hamden	Killingworth
Madison	Meriden	New Haven	North Branford
North Haven	Orange	Wallingford	West Haven
Woodbridge			

New London **8%**
6.9%

Bozrah	Canterbury	East Lyme	Franklin
Griswold	Groton	Ledyard	Lisbon
Montville	New London	North Stonington	Norwich
Old Lyme	Old Saybrook	Plainfield	Preston
Salem	Sprague	Stonington	Waterford
Hopkinton	RI – Westerly Rhode Island		

Stamford **17%**
6.9%

Darien	Greenwich	New Canaan	Norwalk
Stamford	Weston	Westport	Wilton

Torrington **2%**
6.9%

Canaan	Colebrook	Cornwall	Goshen
Hartland	Kent	Litchfield	Morris
Norfolk	North Canaan	Salisbury	Sharon
Torrington	Warren		

Waterbury 6.9%				**10%**
Bethlehem	Middlebury	Naugatuck	Prospect	
Southbury	Thomaston	Waterbury	Watertown	
Wolcott	Woodbury			

EXHIBIT C

Health Insurance Portability and Accountability Act of 1996 ("HIPAA").

(a) If the Contactor is a Business Associate under the requirements of the Health Insurance Portability and Accountability Act of 1996 ("HIPAA"), the Contractor must comply with all terms and conditions of this Section of the Contract. If the Contractor is not a Business Associate under HIPAA, this Section of the Contract does not apply to the Contractor for this Contract.

(b) The Contractor is required to safeguard the use, publication and disclosure of information on all applicants for, and all clients who receive, services under the Contract in accordance with all applicable federal and state law regarding confidentiality, which includes but is not limited to HIPAA, more specifically with the Privacy and Security Rules at 45 C.F.R. Part 160 and Part 164, subparts A, C, and E; and

(c) The State of Connecticut Agency named on page 1 of this Contract (hereinafter the "Department") is a "covered entity" as that term is defined in 45 C.F.R. § 160.103; and

(d) The Contractor, on behalf of the Department, performs functions that involve the use or disclosure of "individually identifiable health information," as that term is defined in 45 C.F.R. § 160.103; and

(e) The Contractor is a "business associate" of the Department, as that term is defined in 45 C.F.R. § 160.103; and

(f) The Contractor and the Department agree to the following in order to secure compliance with the HIPAA, the requirements of Subtitle D of the Health Information Technology for Economic and Clinical Health Act (hereinafter the HITECH Act), (Pub. L. 111-5, sections 13400 to 13423), and more specifically with the Privacy and Security Rules at 45 C.F.R. Part 160 and Part 164, subparts A, C, and E.

(g) Definitions

(1) "Breach shall have the same meaning as the term is defined in section 13400 of the HITECH Act (42 U.S.C. §17921(1))

(2) "Business Associate" shall mean the Contractor.

(3) "Covered Entity" shall mean the Department of the State of Connecticut named on page 1 of this Contract.

(4) "Designated Record Set" shall have the same meaning as the term "designated record set" in 45 C.F.R. § 164.501.

(5) "Electronic Health Record" shall have the same meaning as the term is defined in section 13400 of the HITECH Act (42 U.S.C. §17921(5))

(6) "Individual" shall have the same meaning as the term "individual"' in 45 C.F.R. § 160.103 and shall include a person who qualifies as a personal representative as defined in 45 C.F.R. § 164.502(g).

(7) "Privacy Rule" shall mean the Standards for Privacy of Individually Identifiable Health Information at 45 C.F.R. part 160 and parts 164, subparts A and E.

(8) "Protected Health Information" or "PHI" shall have the same meaning as the term "protected health information" in 45 C.F.R. § 160.103, limited to information created or received by the Business Associate from or on behalf of the Covered Entity.

(9) "Required by Law"' shall have the same meaning as the term "required by law" in 45 C.F.R. § 164.103.

(10) "Secretary" shall mean the Secretary of the Department of Health and Human Services or his designee.

(11) "More stringent" shall have the same meaning as the term "more stringent" in 45 C.F.R. § 160.202.

(12) "This Section of the Contract" refers to the HIPAA Provisions stated herein, in their entirety.

(13) "Security Incident" shall have the same meaning as the term "security incident" in 45 C.F.R.§ 164.304.

(14) "Security Rule" shall mean the Security Standards for the Protection of Electronic Protected Health Information at 45 C.F.R. part 160 and parts 164, subpart A and C.

(15) "Unsecured protected health information" shall have the same meaning as the term as defined in section 13402(h)(1)(A) of HITECH. Act. (42 U.S.C. §17932(h)(1)(A)).

(h) Obligations and Activities of Business Associates.

(1) Business Associate agrees not to use or disclose PHI other than as permitted or required by this Section of the Contract or as Required by Law.

(2) Business Associate agrees to use appropriate safeguards to prevent use or disclosure of PHI other than as provided for in this Section of the Contract.

(3) Business Associate agrees to use administrative, physical and technical safeguards that reasonably and appropriately protect the confidentiality, integrity, and availability of electronic protected health information that it creates, receives, maintains, or transmits on behalf of the Covered Entity.

(4) Business Associate agrees to mitigate, to the extent practicable, any harmful effect that is known to the Business Associate of a use or disclosure of PHI by Business Associate in violation of this Section of the Contract.

(5) Business Associate agrees to report to Covered Entity any use or disclosure of PHI not provided for by this Section of the Contract or any security incident of which it becomes aware.

(6) Business Associate agrees to insure that any agent, including a subcontractor, to whom it provides PHI received from, or created or received by Business Associate, on behalf of the Covered Entity, agrees to the same restrictions and conditions that apply through this Section of the Contract to Business Associate with respect to such information.

(7) Business Associate agrees to provide access, at the request of the Covered Entity, and in the time and manner agreed to by the parties, to PHI in a Designated Record Set, to Covered Entity or, as directed by Covered Entity, to an Individual in order to meet the requirements under 45 C.F.R. § 164.524.

(8) Business Associate agrees to make any amendments to PHI in a Designated Record Set that the Covered Entity directs or agrees to pursuant to 45 C.F.R. § 164.526 at the request of the Covered Entity, and in the time and manner agreed to by the parties.

(9) Business Associate agrees to make internal practices, books, and records, including policies and procedures and PHI, relating to the use and disclosure of PHI received from, or created or received by, Business Associate on behalf of Covered Entity, available to Covered Entity or to the Secretary in a time and manner agreed to by the parties or designated by the Secretary, for purposes of the Secretary determining Covered Entity's compliance with the Privacy Rule.

(10) Business Associate agrees to document such disclosures of PHI and information related to such disclosures as would be required for Covered Entity to respond to a request by an Individual for an accounting of disclosures of PHI in accordance with 45 C.F.R. § 164.528 and section 13405 of the HITECH Act (42 U.S.C. § 17935) and any regulations promulgated thereunder.

(11) Business Associate agrees to provide to Covered Entity, in a time and manner agreed to by the parties, information collected in accordance with clause h. (10) of this Section of the Contract, to permit Covered Entity to respond to a request by an Individual for an accounting of disclosures of PHI in accordance with 45 C.F.R. § 164.528 and section 13405 of the HITECH Act (42 U.S.C. § 17935) and any regulations promulgated thereunder. Business Associate agrees at the Covered Entity's direction to provide an accounting of disclosures of PHI directly to an individual in accordance with 45 C.F.R. § 164.528 and section 13405 of the HITECH Act (42 U.S.C. § 17935) and any regulations promulgated thereunder.

(12) Business Associate agrees to comply with any state or federal law that is more stringent than the Privacy Rule.

(13) Business Associate agrees to comply with the requirements of the HITECH Act relating to privacy and security that are applicable to the Covered Entity and with the requirements of 45 C.F.R. sections 164.504(e), 164.308, 164.310, 164.312, and 164.316.

(14) In the event that an individual requests that the Business Associate (a) restrict disclosures of PHI; (b) provide an accounting of disclosures of the individual's PHI; or (c) provide a copy of the individual's PHI in an electronic health record, the Business Associate agrees to notify the covered entity, in writing, within two business days of the request.

(15) Business Associate agrees that it shall not, directly or indirectly, receive any remuneration in exchange for PHI of an individual without (1) the written approval of the covered entity, unless receipt of remuneration in exchange for PHI is expressly authorized by this Contract and (2) the valid authorization of the individual, except for the purposes provided under section 13405(d)(2) of the HITECH Act,(42 U.S.C. § 17935(d)(2)) and in any accompanying regulations

(16) Obligations in the Event of a Breach

A. The Business Associate agrees that, following the discovery of a breach of unsecured protected health information, it shall notify the Covered Entity of such breach in accordance with the requirements of section 13402 of HITECH (42 U.S.C. 17932(b) and the provisions of this Section of the Contract.
B. Such notification shall be provided by the Business Associate to the Covered Entity without unreasonable delay, and in no case later than 30 days after the breach is discovered by the Business Associate, except as otherwise instructed in writing by a law enforcement official pursuant to section 13402 (g) of HITECH (42 U.S.C. 17932(g)) . A breach is considered discovered as of the first day on which it is, or reasonably should have been, known to the Business Associate. The notification shall include the identification and last known address, phone number and email address of each individual (or the next of kin of the individual if the individual is deceased) whose unsecured protected health information has been, or is reasonably believed by the Business Associate to have been, accessed, acquired, or disclosed during such breach.
C. The Business Associate agrees to include in the notification to the Covered Entity at least the following information:
    1. A brief description of what happened, including the date of the breach and the date of the discovery of the breach, if known.

    2. A description of the types of unsecured protected health information that were involved in the breach (such as full name, Social Security number, date of birth, home address, account number, or disability code).

    3. The steps the Business Associate recommends that individuals take to protect themselves from potential harm resulting from the breach.

    4. A detailed description of what the Business Associate is doing to investigate the breach, to mitigate losses, and to protect against any further breaches.

    5. Whether a law enforcement official has advised either verbally or in writing the Business Associate that he or she has determined that notification or notice to

individuals or the posting required under section 13402 of the HITECH Act would impede a criminal investigation or cause damage to national security and; if so, include contact information for said official.

D. Business Associate agrees to provide appropriate staffing and have established procedures to ensure that individuals informed by the Covered Entity of a breach by the Business Associate have the opportunity to ask questions and contact the Business Associate for additional information regarding the breach. Such procedures shall include a toll-free telephone number, an e-mail address, a posting on its Web site and a postal address. Business Associate agrees to include in the notification of a breach by the Business Associate to the Covered Entity, a written description of the procedures that have been established to meet these requirements. Costs of such contact procedures will be borne by the Contractor.

E. Business Associate agrees that, in the event of a breach, it has the burden to demonstrate that it has complied with all notifications requirements set forth above, including evidence demonstrating the necessity of a delay in notification to the Covered Entity.

(i) Permitted Uses and Disclosure by Business Associate.

(1) General Use and Disclosure Provisions Except as otherwise limited in this Section of the Contract, Business Associate may use or disclose PHI to perform functions, activities, or services for, or on behalf of, Covered Entity as specified in this Contract, provided that such use or disclosure would not violate the Privacy Rule if done by Covered Entity or the minimum necessary policies and procedures of the Covered Entity.

(2) Specific Use and Disclosure Provisions

(A) Except as otherwise limited in this Section of the Contract, Business Associate may use PHI for the proper management and administration of Business Associate or to carry out the legal responsibilities of Business Associate.

(B) Except as otherwise limited in this Section of the Contract, Business Associate may disclose PHI for the proper management and administration of Business Associate, provided that disclosures are Required by Law, or Business Associate obtains reasonable assurances from the person to whom the information is disclosed that it will remain confidential and used or further disclosed only as Required by Law or for the purpose for which it was disclosed to the person, and the person notifies Business Associate of any instances of which it is aware in which the confidentiality of the information has been breached.

(C) Except as otherwise limited in this Section of the Contract, Business Associate may use PHI to provide Data Aggregation services to Covered Entity as permitted by 45 C.F.R. § 164.504(e)(2)(i)(B).

(j) Obligations of Covered Entity.

(1) Covered Entity shall notify Business Associate of any limitations in its notice of privacy practices of Covered Entity, in accordance with 45 C.F.R. § 164.520, or to the extent that such limitation may affect Business Associate's use or disclosure of PHI.

(2) Covered Entity shall notify Business Associate of any changes in, or revocation of, permission by Individual to use or disclose PHI, to the extent that such changes may affect Business Associate's use or disclosure of PHI.

(3) Covered Entity shall notify Business Associate of any restriction to the use or disclosure of PHI that Covered Entity has agreed to in accordance with 45 C.F.R. § 164.522, to the extent that such restriction may affect Business Associate's use or disclosure of PHI.

(k) Permissible Requests by Covered Entity. Covered Entity shall not request Business Associate to use or disclose PHI in any manner that would not be permissible under the Privacy Rule if done by the Covered Entity, except that Business Associate may use and disclose PHI for data aggregation, and management and administrative activities of Business Associate, as permitted under this Section of the Contract.

(l) Term and Termination.

(1) Term. The Term of this Section of the Contract shall be effective as of the date the Contract is effective and shall terminate when the information collected in accordance with clause h. (10) of this Section of the Contract is provided to the Covered Entity and all of the PHI provided by Covered Entity to Business Associate, or created or received by Business Associate on behalf of Covered Entity, is destroyed or returned to Covered Entity, or, if it is infeasible to return or destroy PHI, protections are extended to such information, in accordance with the termination provisions in this Section.

(2) Termination for Cause Upon Covered Entity's knowledge of a material breach by Business Associate, Covered Entity shall either:

(A) Provide an opportunity for Business Associate to cure the breach or end the violation and terminate the Contract if Business Associate does not cure the breach or end the violation within the time specified by the Covered Entity; or

(B) Immediately terminate the Contract if Business Associate has breached a material term of this Section of the Contract and cure is not possible; or

(C) If neither termination nor cure is feasible, Covered Entity shall report the violation to the Secretary.

(3) Effect of Termination

(A) Except as provided in (l)(2) of this Section of the Contract, upon termination of this Contract, for any reason, Business Associate shall return or destroy all PHI received from Covered Entity, or created or received by Business Associate on behalf of Covered Entity. Business Associate shall also provide the information collected in accordance with clause h. (10) of this Section of the Contract to the Covered Entity

within ten business days of the notice of termination. This provision shall apply to PHI that is in the possession of subcontractors or agents of Business Associate. Business Associate shall retain no copies of the PHI.

(B) In the event that Business Associate determines that returning or destroying the PHI is infeasible, Business Associate shall provide to Covered Entity notification of the conditions that make return or destruction infeasible. Upon documentation by Business Associate that return or destruction of PHI is infeasible, Business Associate shall extend the protections of this Section of the Contract to such PHI and limit further uses and disclosures of PHI to those purposes that make return or destruction infeasible, for as long as Business Associate maintains such PHI. Infeasibility of the return or destruction of PHI includes, but is not limited to, requirements under state or federal law that the Business Associate maintains or preserves the PHI or copies thereof.

(m) Miscellaneous Provisions.

(1) Regulatory References. A reference in this Section of the Contract to a section in the Privacy Rule means the section as in effect or as amended.

(2) Amendment. The Parties agree to take such action as in necessary to amend this Section of the Contract from time to time as is necessary for Covered Entity to comply with requirements of the Privacy Rule and the Health Insurance Portability and Accountability Act of 1996, Pub. L. No. 104-191.

(3) Survival. The respective rights and obligations of Business Associate shall survive the termination of this Contract.

(4) Effect on Contract. Except as specifically required to implement the purposes of this Section of the Contract, all other terms of the Contract shall remain in force and effect.

(5) Construction. This Section of the Contract shall be construed as broadly as necessary to implement and comply with the Privacy Standard. Any ambiguity in this Section of the Contract shall be resolved in favor of a meaning that complies, and is consistent with, the Privacy Standard.

(6) Disclaimer. Covered Entity makes no warranty or representation that compliance with this Section of the Contract will be adequate or satisfactory for Business Associate's own purposes. Covered Entity shall not be liable to Business Associate for any claim, civil or criminal penalty, loss or damage related to or arising from the unauthorized use or disclosure of PHI by Business Associate or any of its officers, directors, employees, contractors or agents, or any third party to whom Business Associate has disclosed PHI contrary to the provisions of this Contract or applicable law. Business Associate is solely responsible for all decisions made, and actions taken, by Business Associate regarding the safeguarding, use and disclosure of PHI within its possession, custody or control.

(7) Indemnification. The Business Associate shall indemnify and hold the Covered Entity harmless from and against any and all claims, liabilities, judgments, fines, assessments, penalties, awards and any statutory damages that may be imposed or assessed pursuant to HIPAA, as amended or the

HITECH Act, including, without limitation, attorney's fees, expert witness fees, costs of investigation, litigation or dispute resolution, and costs awarded thereunder, relating to or arising out of any violation by the Business Associate and its agents, including subcontractors, of any obligation of Business Associate and its agents, including subcontractors, under this section of the contract, under HIPAA, the HITECH Act, the Privacy Rule and the Security Rule.

Notice to Executive Branch State Contractors and Prospective State Contractors of Campaign Contribution and Solicitation Limitations

This notice is provided under the authority of Connecticut General Statutes §9-612(g)(2), as amended by P.A. 10-1, and is for the purpose of informing state contractors and prospective state contractors of the following law (italicized words are defined on the reverse side of this page).

CAMPAIGN CONTRIBUTION AND SOLICITATION LIMITATIONS

No *state contractor, prospective state contractor, principal of a state contractor or principal of a prospective state contractor*, with regard to a *state contract* or *state contract solicitation* with or from a state agency in the executive branch or a quasi-public agency or a holder, or principal of a holder of a valid prequalification certificate, shall make a contribution to (i) an exploratory committee or candidate committee established by a candidate for nomination or election to the office of Governor, Lieutenant Governor, Attorney General, State Comptroller, Secretary of the State or State Treasurer, (ii) a political committee authorized to make contributions or expenditures to or for the benefit of such candidates, or (iii) a party committee (which includes town committees).

In addition, no holder or principal of a holder of a valid prequalification certificate, shall make a contribution to (i) an exploratory committee or candidate committee established by a candidate for nomination or election to the office of State senator or State representative, (ii) a political committee authorized to make contributions or expenditures to or for the benefit of such candidates, or (iii) a party committee.

On and after January 1, 2011, no state contractor, prospective state contractor, principal of a state contractor or principal of a prospective state contractor, with regard to a state contract or state contract solicitation with or from a state agency in the executive branch or a quasi-public agency or a holder, or principal of a holder of a valid prequalification certificate, shall **knowingly** *solicit* contributions from the state contractor's or prospective state contractor's employees or from a *subcontractor* or *principals of the subcontractor* on behalf of (i) an exploratory committee or candidate committee established by a candidate for nomination or election to the office of Governor, Lieutenant Governor, Attorney General, State Comptroller, Secretary of the State or State Treasurer, (ii) a political committee authorized to make contributions or expenditures to or for the benefit of such candidates, or (iii) a party committee.

DUTY TO INFORM

State contractors and prospective state contractors are required to inform their principals of the above prohibitions, as applicable, and the possible penalties and other consequences of any violation thereof.

PENALTIES FOR VIOLATIONS

Contributions or solicitations of contributions made in violation of the above prohibitions may result in the following civil and criminal penalties:

Civil penalties—Up to $2,000 or twice the amount of the prohibited contribution, whichever is greater, against a principal or a contractor. Any state contractor or prospective state contractor which fails to make reasonable efforts to comply with the provisions requiring notice to its principals of these prohibitions and the possible consequences of their violations may also be subject to civil penalties of up to $2,000 or twice the amount of the prohibited contributions made by their principals.

Criminal penalties—Any knowing and willful violation of the prohibition is a Class D felony, which may subject the violator to imprisonment of not more than 5 years, or not more than $5,000 in fines, or both.

CONTRACT CONSEQUENCES

In the case of a state contractor, contributions made or solicited in violation of the above prohibitions may resulting the contract being voided.

In the case of a prospective state contractor, contributions made or solicited in violation of the above prohibitions shall result in the contract described in the state contract solicitation not being awarded to the prospective state contractor, unless the State Elections Enforcement Commission determines that mitigating circumstances exist concerning such violation.

The State shall not award any other state contract to anyone found in violation of the above prohibitions for a period of one year after the election for which such contribution is made or solicited, unless the State Elections Enforcement Commission determines that mitigating circumstances exist concerning such violation.
Additional information may be found on the website of the State Elections Enforcement Commission, www.ct.gov/seec. Click on the link to “Lobbyist/Contractor Limitations.”

DEFINITIONS

"State contractor" means a person, business entity or nonprofit organization that enters into a state contract. Such person, business entity or nonprofit organization shall be deemed to be a state contractor until December thirty-first of the year in which such contract terminates. "State contractor" does not include a municipality or any other political subdivision of the state, including any entities or associations duly created by the municipality or political subdivision exclusively amongst themselves to further any purpose authorized by statute or charter, or an employee in the executive or legislative branch of state government or a quasi-public agency, whether in the classified or unclassified service and full or part-time, and only in such person's capacity as a state or quasi-public agency employee.

"Prospective state contractor" means a person, business entity or nonprofit organization that (i) submits a response to a state contract solicitation by the state, a state agency or a quasi-public agency, or a proposal in response to a request for proposals by the state, a state agency or a quasi-public agency, until the contract has been entered into, or (ii) holds a valid prequalification certificate issued by the Commissioner of Administrative Services under section 4a-100. "Prospective state contractor" does not include a municipality or any other political subdivision of the state, including any entities or associations duly created by the municipality or political subdivision exclusively amongst themselves to further any purpose authorized by statute or charter, or an employee in the executive or legislative branch of state government or a quasi-public agency, whether in the classified or unclassified service and full or part-time, and only in such person's capacity as a state or quasi-public agency employee.

"Principal of a state contractor or prospective state contractor" means (i) any individual who is a member of the board of directors of, or has an ownership interest of five per cent or more in, a state contractor or prospective state contractor, which is a business entity, except for an individual who is a member of the board of directors of a nonprofit organization**,** (ii) an individual who is employed by a state contractor or prospective state contractor, which is a business entity, as president, treasurer or executive vice president, (iii) an individual who is the chief executive officer of a state contractor or prospective state contractor, which is not a business entity, or if a state contractor or prospective state contractor has no such officer, then the officer who duly possesses comparable powers and duties, (iv) an officer or an employee of any state contractor or prospective state contractor who has *managerial or discretionary responsibilities with respect to a state contract*, (v) the spouse or a *dependent child* who is eighteen years of age or older of an individual described in this subparagraph, or (vi) a political committee established or controlled by an individual described in this subparagraph or the business entity or nonprofit organization that is the state contractor or prospective state contractor.

"State contract" means an agreement or contract with the state or any state agency or any quasi-public agency, let through a procurement process or otherwise, having a value of fifty thousand dollars or more, or a combination or series of such agreements or contracts having a value of one hundred thousand dollars or more in a calendar year, for (i) the rendition of services, (ii) the furnishing of any goods, material, supplies, equipment or any items of any kind, (iii) the construction, alteration or repair of any public building or public work, (iv) the acquisition, sale or lease of any land or building, (v) a licensing arrangement, or (vi) a grant, loan or loan guarantee. "State contract" does not include any agreement or contract with the state, any state agency or any quasi-public agency that is exclusively federally funded, an education loan, a loan to an individual for other than commercial purposes or any agreement or contract between the state or any state agency and the United States Department of the Navy or the United States Department of Defense.

"State contract solicitation" means a request by a state agency or quasi-public agency, in whatever form issued, including, but not limited to, an invitation to bid, request for proposals, request for information or request for quotes, inviting bids, quotes or other types of submittals, through a competitive procurement process or another process authorized by law waiving competitive procurement.

"Managerial or discretionary responsibilities with respect to a state contract" means having direct, extensive and substantive responsibilities with respect to the negotiation of the state contract and not peripheral, clerical or ministerial responsibilities.

"Dependent child" means a child residing in an individual's household who may legally be claimed as a dependent on the federal income tax of such individual.

"Solicit" means (A) requesting that a contribution be made, (B) participating in any fund-raising activities for a candidate committee, exploratory committee, political committee or party committee, including, but not limited to, forwarding tickets to potential contributors, receiving contributions for transmission to any such committee or bundling contributions, (C) serving as chairperson, treasurer or deputy treasurer of any such committee, or (D) establishing a political committee for the sole purpose of soliciting or receiving contributions for any committee. Solicit does not include: (i) making a contribution that is otherwise permitted by Chapter 155 of the Connecticut General Statutes; (ii) informing any person of a position taken by a candidate for public office or a public official, (iii) notifying the person of any activities of, or contact information for, any candidate for public office; or (iv) serving as a member in any party committee or as an officer of such committee that is not otherwise prohibited in this section.

"Subcontractor" means any person, business entity or nonprofit organization that contracts to perform part or all of the obligations of a state contractor's state contract. Such person, business entity or nonprofit organization shall be deemed to be a subcontractor until December thirty first of the year in which the subcontract terminates. "Subcontractor" does not include (i) a municipality or any other political subdivision of the state, including any entities or associations duly created by the municipality or political subdivision exclusively amongst themselves to further any purpose authorized by statute or charter, or (ii) an employee in the executive or legislative branch of state government or a quasi-public agency, whether in the classified or unclassified service and full or part-time, and only in such person's capacity as a state or quasi-public agency employee.

"Principal of a subcontractor" means (i) any individual who is a member of the board of directors of, or has an ownership interest of five per cent or more in, a subcontractor, which is a business entity, except for an individual who is a member of the board of directors of a nonprofit organization, (ii) an individual who is employed by a subcontractor, which is a business entity, as president, treasurer or executive vice president, (iii) an individual who is the chief executive officer of a subcontractor, which is not a business entity, or if a subcontractor has no such officer, then the officer who duly possesses comparable powers and duties, (iv) an officer or an employee of any subcontractor who has managerial or discretionary responsibilities with respect to a subcontract with a state contractor, (v) the spouse or a dependent child who is eighteen years of age or older of an individual described in this subparagraph, or (vi) a political committee established or controlled by an individual described in this subparagraph or the business entity or nonprofit organization that is the subcontractor.

EXHIBIT E

(state wages will be inserted here)

Project: Maintenance Facilities Tank Replacement

Minimum Rates and Classifications
for Heavy/Highway Construction

ID#: **H** 22884

Connecticut Department of Labor
Wage and Workplace Standards Division

By virtue of the authority vested in the Labor Commissioner under provisions of Section 31-53 of the General Statutes of Connecticut, as amended, the following are declared to be the prevailing rates and welfare payments and will apply only where the contract is advertised for bid within 20 days of the date on which the rates are established. Any contractor or subcontractor not obligated by agreement to pay to the welfare and pension fund shall pay this amount to each employee as part of his/her hourly wages.

Project Number:

Project Town: Hartford

FAP Number:

State Number: 171-418

Project: Maintenance Facilities Tank Replacement

CLASSIFICATION	Hourly Rate	Benefits
01) Asbestos/Toxic Waste Removal Laborers: Asbestos removal and encapsulation (except its removal from mechanical systems which are not to be scrapped), toxic waste removers, blasters. **See Laborers Group 5 and 7**		
1) Boilermaker	33.79	34% + 8.96
1a) Bricklayer, Cement Masons, Cement Finishers, Plasterers, Stone Masons	33.48	28.76
2) Carpenters, Piledrivermen	32.00	24.42

As of: Monday, November 14, 2016

Project: Maintenance Facilities Tank Replacement

2a) Diver Tenders	32.00	24.42
3) Divers	40.46	24.42
03a) Millwrights	32.47	24.84
4) Painters: (Bridge Construction) Brush, Roller, Blasting (Sand, Water, etc.), Spray	46.95	20.15
4a) Painters: Brush and Roller	32.02	20.15
4b) Painters: Spray Only	35.02	20.15
4c) Painters: Steel Only	34.02	20.15

As of: Monday, November 14, 2016

Project: Maintenance Facilities Tank Replacement

4d) Painters: Blast and Spray	35.02	20.15
4e) Painters: Tanks, Tower and Swing	34.02	20.15
5) Electrician (Trade License required: E-1,2 L-5,6 C-5,6 T-1,2 L-1,2 V-1,2,7,8,9)	38.65	24.42+3% of gross wage
6) Ironworkers: Ornamental, Reinforcing, Structural, and Precast Concrete Erection	35.22	31.99 + a
7) Plumbers (Trade License required: (P-1,2,6,7,8,9 J-1,2,3,4 SP-1,2) and Pipefitters (Including HVAC Work) (Trade License required: S-1,2,3,4,5,6,7,8 B-1,2,3,4 D-1,2,3,4 G-1, G-2, G-8, G-9)	40.62	29.71

----LABORERS---- -

8) Group 1: Laborer (Unskilled), Common or General, acetylene burner, concrete specialist	28.55	18.90

As of: Monday, November 14, 2016

Project: Maintenance Facilities Tank Replacement

9) Group 2: Chain saw operators, fence and guard rail erectors, pneumatic tool operators, powdermen	28.80	18.90
10) Group 3: Pipelayers	29.05	18.90
11) Group 4: Jackhammer/Pavement breaker (handheld); mason tenders (cement/concrete), catch basin builders, asphalt rakers, air track operators, block paver, curb setter and forklift operators	29.05	18.90
12) Group 5: Toxic waste removal (non-mechanical systems)	30.55	18.90
13) Group 6: Blasters	30.30	18.90
Group 7: Asbestos/lead removal, non-mechanical systems (does not include leaded joint pipe)	29.55	18.90
Group 8: Traffic control signalmen	16.00	18.90

As of: Monday, November 14, 2016

Group 9: Hydraulic Drills	29.30	18.90

----LABORERS (TUNNEL CONSTRUCTION, FREE AIR). Shield Drive and Liner Plate Tunnels in Free Air.----

13a) Miners, Motormen, Mucking Machine Operators, Nozzle Men, Grout Men, Shaft & Tunnel Steel & Rodmen, Shield & Erector, Arm Operator, Cable Tenders	32.22	18.90 + a
13b) Brakemen, Trackmen	31.28	18.90 + a
14) Concrete Workers, Form Movers, and Strippers	31.28	18.90 + a
15) Form Erectors	31.60	18.90 + a

----ROCK SHAFT LINING, CONCRETE, LINING OF SAME AND TUNNEL IN FREE AIR:----

Project: Maintenance Facilities Tank Replacement

16) Brakemen, Trackmen, Tunnel Laborers, Shaft Laborers	31.28	18.90 + a
17) Laborers Topside, Cage Tenders, Bellman	31.17	18.90 + a
18) Miners	32.22	18.90 + a
----TUNNELS, CAISSON AND CYLINDER WORK IN COMPRESSED AIR: ----		
18a) Blaster	38.53	18.90 + a
19) Brakemen, Trackmen, Groutman, Laborers, Outside Lock Tender, Gauge Tenders	38.34	18.90 + a
20) Change House Attendants, Powder Watchmen, Top on Iron Bolts	36.41	18.90 + a

As of: Monday, November 14, 2016

Project: Maintenance Facilities Tank Replacement

21) Mucking Machine Operator	39.11	18.90 + a

----TRUCK DRIVERS----(*see note below)

Two axle trucks	28.83	21.39 + a
Three axle trucks; two axle ready mix	28.93	21.39 + a
Three axle ready mix	28.98	21.39 + a
Four axle trucks, heavy duty trailer (up to 40 tons)	29.03	21.39 + a
Four axle ready-mix	29.08	21.39 + a

As of: Monday, November 14, 2016

Heavy duty trailer (40 tons and over)	29.28	21.39 + a
Specialized earth moving equipment other than conventional type on-the road trucks and semi-trailer (including Euclids)	29.08	21.39 + a
----POWER EQUIPMENT OPERATORS----		
Group 1: Crane handling or erecting structural steel or stone, hoisting engineer (2 drums or over), front end loader (7 cubic yards or over), Work Boat 26 ft. & Over, Tunnel Boring Machines. (Trade License Required)	38.55	23.55 + a
Group 2: Cranes (100 ton rate capacity and over); Excavator over 2 cubic yards; Piledriver ($3.00 premium when operator controls hammer); Bauer Drill/Caisson. (Trade License Required)	38.23	23.55 + a
Group 3: Excavator/Backhoe under 2 cubic yards; Cranes (under 100 ton rated capacity), Gradall; Master Mechanic; Hoisting Engineer (all types of equipment where a drum and cable are used to hoist or drag material regardless of motive power of operation), Rubber Tire Excavator (Drott-1085 or similar);Grader Operator; Bulldozer Fine Grade (slopes, shaping, laser or GPS, etc.). (Trade License Required)	37.49	23.55 + a
Group 4: Trenching Machines; Lighter Derrick; Concrete Finishing Machine; CMI Machine or Similar; Koehring Loader (Skooper)	37.10	23.55 + a

Project: Maintenance Facilities Tank Replacement

Group 5: Specialty Railroad Equipment; Asphalt Paver; Asphalt Spreader; Asphalt Reclaiming Machine; Line Grinder; Concrete Pumps; Drills with Self Contained Power Units; Boring Machine; Post Hole Digger; Auger; Pounder; Well Digger; Milling Machine (over 24" Mandrell)	36.51	23.55 + a
Group 5 continued: Side Boom; Combination Hoe and Loader; Directional Driller.	36.51	23.55 + a
Group 6: Front End Loader (3 up to 7 cubic yards); Bulldozer (rough grade dozer).	36.20	23.55 + a
Group 7: Asphalt Roller; Concrete Saws and Cutters (ride on types); Vermeer Concrete Cutter; Stump Grinder; Scraper; Snooper; Skidder; Milling Machine (24" and Under Mandrel).	35.86	23.55 + a
Group 8: Mechanic, Grease Truck Operator, Hydroblaster, Barrier Mover, Power Stone Spreader; Welder; Work Boat under 26 ft.; Transfer Machine.	35.46	23.55 + a
Group 9: Front End Loader (under 3 cubic yards), Skid Steer Loader regardless of attachments (Bobcat or Similar); Fork Lift, Power Chipper; Landscape Equipment (including hydroseeder).	35.03	23.55 + a
Group 10: Vibratory Hammer, Ice Machine, Diesel and Air Hammer, etc.	32.99	23.55 + a

As of: Monday, November 14, 2016

Project: Maintenance Facilities Tank Replacement

Group 11: Conveyor, Earth Roller; Power Pavement Breaker (whiphammer), Robot Demolition Equipment.	32.99	23.55 + a
Group 12: Wellpoint Operator.	32.93	23.55 + a
Group 13: Compressor Battery Operator.	32.35	23.55 + a
Group 14: Elevator Operator; Tow Motor Operator (Solid Tire No Rough Terrain).	31.21	23.55 + a
Group 15: Generator Operator; Compressor Operator; Pump Operator; Welding Machine Operator; Heater Operator.	30.80	23.55 + a
Group 16: Maintenance Engineer/Oiler	30.15	23.55 + a
Group 17: Portable asphalt plant operator; portable crusher plant operator; portable concrete plant operator.	34.46	23.55 + a

As of: Monday, November 14, 2016

Project: Maintenance Facilities Tank Replacement

Group 18: Power Safety Boat; Vacuum Truck; Zim Mixer; Sweeper; (minimum for any job requiring CDL license).	32.04	23.55 + a

**NOTE: SEE BELOW

----LINE CONSTRUCTION----(Railroad Construction and Maintenance)----

20) Lineman, Cable Splicer, Technician	45.43	6.25% + 20.70
21) Heavy Equipment Operator	40.89	6.25% + 18.56
22) Equipment Operator, Tractor Trailer Driver, Material Men	38.62	6.25% + 17.99
23) Driver Groundmen	24.99	6.25% + 11.81

As of: Monday, November 14, 2016

Project: Maintenance Facilities Tank Replacement

23a) Truck Driver	34.07	6.25% + 16.60

----LINE CONSTRUCTION----

24) Driver Groundmen	30.92	6.5% + 9.70
25) Groundmen	22.67	6.5% + 6.20
26) Heavy Equipment Operators	37.10	6.5% + 10.70
27) Linemen, Cable Splicers, Dynamite Men	41.22	6.5% + 12.20
28) Material Men, Tractor Trailer Drivers, Equipment Operators	35.04	6.5% + 10.45

As of: Monday, November 14, 2016

Project: Maintenance Facilities Tank Replacement

Welders: Rate for craft to which welding is incidental.

**Note: Hazardous waste removal work receives additional $1.25 per hour for truck drivers.*

***Note: Hazardous waste premium $3.00 per hour over classified rate*

ALL Cranes: When crane operator is operating equipment that requires a fully licensed crane operator to operate he receives an extra $3.00 premium in addition to the hourly wage rate and benefit contributions:

1) Crane handling or erecting structural steel or stone; hoisting engineer (2 drums or over)

2) Cranes (100 ton rate capacity and over) Bauer Drill/Caisson

3) Cranes (under 100 ton rated capacity)

Crane with 150 ft. boom (including jib) - $1.50 extra
Crane with 200 ft. boom (including jib) - $2.50 extra
Crane with 250 ft. boom (including jib) - $5.00 extra
Crane with 300 ft. boom (including jib) - $7.00 extra
Crane with 400 ft. boom (including jib) - $10.00 extra

All classifications that indicate a percentage of the fringe benefits must be calculated at the percentage rate times the "base hourly rate".

Apprentices duly registered under the Commissioner of Labor's regulations on "Work Training Standards for Apprenticeship and Training Programs" Section 31-51-d-1 to 12, are allowed to be paid the appropriate percentage of the prevailing journeymen hourly base and the full fringe benefit rate, providing the work site ratio shall not be less than one full-time journeyperson instructing and supervising the work of each apprentice in a specific trade.

~~Connecticut General Statute Section 31-55a: Annual Adjustments to wage rates by contractors doing state work ~~

The Prevailing wage rates applicable to this project are subject to annual adjustments each July 1st for the duration of the project.

Each contractor shall pay the annual adjusted prevailing wage rate that is in effect each July 1st, as posted by the Department of Labor.

It is the contractor's responsibility to obtain the annual adjusted prevailing wage rate increases directly from the Department of Labor's website.

The annual adjustments will be posted on the Department of Labor's Web page: www.ct.gov/dol.

The Department of Labor will continue to issue the initial prevailing wage rate schedule to the Contracting Agency for the project.

All subsequent annual adjustments will be posted on our Web Site for contractor access.

Contracting Agencies are under no obligation pursuant to State labor law to pay any increase due to the annual adjustment provision.

As of: Monday, November 14, 2016

Project: Maintenance Facilities Tank Replacement

Effective October 1, 2005 - Public Act 05-50: any person performing the work of any mechanic, laborer, or worker shall be paid prevailing wage

All Person who perform work ON SITE must be paid prevailing wage for the appropriate mechanic, laborer, or worker classification.

All certified payrolls must list the hours worked and wages paid to All Persons who perform work ON SITE regardless of their ownership i.e.: (Owners, Corporate Officers, LLC Members, Independent Contractors, et. al)

Reporting and payment of wages is required regardless of any contractual relationship alleged to exist between the contractor and such person.

~~Unlisted classifications needed for work not included within the scope of the classifications listed may be added after award only as provided in the labor standards contract clause (29 CFR 5.5 (a) (1) (ii)).

Please direct any questions which you may have pertaining to classification of work and payment of prevailing wages to the Wage and Workplace Standards Division, telephone (860)263-6790.

As of: Monday, November 14, 2016

Minimum Rates and Classifications for Building Construction

ID# : B 22884

Connecticut Department of Labor
Wage and Workplace Standards Division

By virtue of the authority vested in the Labor Commissioner under provisions of Section 31-53 of the General Statutes of Connecticut, as amended, the following are declared to be the prevailing rates and welfare payments and will apply only where the contract is advertised for bid within 20 days of the date on which the rates are established. Any contractor or subcontractor not obligated by agreement to pay to the welfare and pension fund shall pay this amount to each employee as part of his/her hourly wages.

Project Number:

State#: 171-418

Project Town: Hartford

FAP#:

Project: Maintenance Facilities Tank Replacement

CLASSIFICATION	Hourly Rate	Benefits
1a) Asbestos Worker/Insulator (Includes application of insulating materials, protective coverings, coatings, & finishes to all types of mechanical systems; application of firestopping material for wall openings & penetrations in walls, floors, ceilings	35.75	28.82
1b) Asbestos/Toxic Waste Removal Laborers: Asbestos removal and encapsulation (except its removal from mechanical systems which are not to be scrapped), toxic waste removers, blasters.**See Laborers Group 7**		
1c) Asbestos Worker/Heat and Frost Insulator	37.15	27.56

As of: **Monday, November 14, 2016**

Project: Maintenance Facilities Tank Replacement

2) Boilermaker	35.24	25.01
3a) Bricklayer, Cement Mason, Concrete Finisher (including caulking), Stone Masons	33.48	29.16 + a
3b) Tile Setter	34.30	24.15
3c) Terrazzo Mechanics and Marble Setters	31.69	22.35
3d) Tile, Marble & Terrazzo Finishers	26.43	20.59
3e) Plasterer	33.48	29.16

As of: **Monday, November 14, 2016**

Project: Maintenance Facilities Tank Replacement

------LABORERS------

4) Group 1: Laborers (common or general), acetylene burners, carpenter tenders, concrete specialists, wrecking laborers, fire watchers.	28.55	18.90
4a) Group 2: Mortar mixers, plaster tender, power buggy operators, powdermen, fireproofer/mixer/nozzleman (Person running mixer and spraying fireproof only).	28.80	18.90
4b) Group 3: Jackhammer operators/pavement breaker, mason tender (brick), mason tender (cement/concrete), forklift operators and forklift operators (masonry).	29.05	18.90
4c) **Group 4: Pipelayers (Installation of water, storm drainage or sewage lines outside of the building line with P6, P7 license) (the pipelayer rate shall apply only to one or two employees of the total crew who primary task is to actually perform the mating of pipe sections) P6 and P7 rate is $26.80.	28.80	18.90
4d) Group 5: Air track operator, sand blaster and hydraulic drills.	29.30	18.90

As of: **Monday, November 14, 2016**

4e) Group 6: Blasters, nuclear and toxic waste removal.	31.55	18.90
4f) Group 7: Asbestos/lead removal and encapsulation (except it's removal from mechanical systems which are not to be scrapped).	29.55	18.90
4g) Group 8: Bottom men on open air caisson, cylindrical work and boring crew.	28.38	18.90
4h) Group 9: Top men on open air caisson, cylindrical work and boring crew.	27.86	18.90
4i) Group 10: Traffic Control Signalman	16.00	18.90
5) Carpenter, Acoustical Ceiling Installation, Soft Floor/Carpet Laying, Metal Stud Installation, Form Work and Scaffold Building, Drywall Hanging, Modular-Furniture Systems Installers, Lathers, Piledrivers, Resilient Floor Layers.	32.00	24.42

Project: Maintenance Facilities Tank Replacement

5a) Millwrights	32.47	24.84
6) Electrical Worker (including low voltage wiring) (Trade License required: E1,2 L-5,6 C-5,6 T-1,2 L-1,2 V-1,2,7,8,9)	38.65	24.42+3% of gross wage
7a) Elevator Mechanic (Trade License required: R-1,2,5,6)	49.00	29.985+a+b
-----LINE CONSTRUCTION----		
Groundman	24.99	6.25%+11.81
Linemen/Cable Splicer	45.43	6.25%+20.70

As of: **Monday, November 14, 2016**

8) Glazier (Trade License required: FG-1,2)	35.58	20.15 + a
9) Ironworker, Ornamental, Reinforcing, Structural, and Precast Concrete Erection	35.22	31.99 + a
----OPERATORS----		
Group 1: Crane handling or erecting structural steel or stone, hoisting engineer 2 drums or over, front end loader (7 cubic yards or over), work boat 26 ft. and over and Tunnel Boring Machines. (Trade License Required)	38.55	23.55 + a
Group 2: Cranes (100 ton rate capacity and over); Excavator over 2 cubic yards; Piledriver ($3.00 premium when operator controls hammer); Bauer Drill/Caisson. (Trade License Required)	38.23	23.55 + a
Group 3: Excavator; Backhoe/Excavator under 2 cubic yards; Cranes (under 100 ton rated capacity), Grader/Blade; Master Mechanic; Hoisting Engineer (all types of equipment where a drum and cable are used to hoist or drag material regardless of motive power of operation), Rubber Tire Excavator (Drott-1085 or similar);Grader Operator; Bulldozer Fine Grade. (slopes, shaping, laser or GPS, etc.). (Trade License Required)	37.49	23.55 + a

Project: Maintenance Facilities Tank Replacement

Group 4: Trenching Machines; Lighter Derrick; Concrete Finishing Machine; CMI Machine or Similar; Koehring Loader (Skooper).	37.10	23.55 + a
Group 5: Specialty Railroad Equipment; Asphalt Paver; Asphalt Reclaiming Machine; Line Grinder; Concrete Pumps; Drills with Self Contained Power Units; Boring Machine; Post Hole Digger; Auger; Pounder; Well Digger; Milling Machine (over 24" Mandrell)	36.51	23.55 + a
Group 5 continued: Side Boom; Combination Hoe and Loader; Directional Driller; Pile Testing Machine.	36.51	23.55 + a
Group 6: Front End Loader (3 up to 7 cubic yards); Bulldozer (rough grade dozer).	36.20	23.55 + a
Group 7: Asphalt roller, concrete saws and cutters (ride on types), vermeer concrete cutter, Stump Grinder; Scraper; Snooper; Skidder; Milling Machine (24" and under Mandrell).	35.86	23.55 + a
Group 8: Mechanic, grease truck operator, hydroblaster; barrier mover; power stone spreader; welding; work boat under 26 ft.; transfer machine.	35.46	23.55 + a

As of: **Monday, November 14, 2016**

Group 9: Front end loader (under 3 cubic yards), skid steer loader regardless of attachments, (Bobcat or Similar): forklift, power chipper; landscape equipment (including Hydroseeder).	35.03	23.55 + a
Group 10: Vibratory hammer; ice machine; diesel and air, hammer, etc.	32.99	23.55 + a
Group 11: Conveyor, earth roller, power pavement breaker (whiphammer), robot demolition equipment.	32.99	23.55 + a
Group 12: Wellpoint operator.	32.93	23.55 + a
Group 13: Compressor battery operator.	32.35	23.55 + a
Group 14: Elevator operator; tow motor operator (solid tire no rough terrain).	31.21	23.55 + a

As of: **Monday, November 14, 2016**

Group 15: Generator Operator; Compressor Operator; Pump Operator; Welding Machine Operator; Heater Operator.	30.80	23.55 + a
Group 16: Maintenance Engineer/Oiler.	30.15	23.55 + a
Group 17: Portable asphalt plant operator; portable crusher plant operator; portable concrete plant operator.	34.46	23.55 + a
Group 18: Power safety boat; vacuum truck; zim mixer; sweeper; (Minimum for any job requiring a CDL license).	32.04	23.55 + a
------PAINTERS (Including Drywall Finishing)------		
10a) Brush and Roller	32.02	20.15

Project: Maintenance Facilities Tank Replacement

10b) Taping Only/Drywall Finishing	32.77	20.15
10c) Paperhanger and Red Label	32.52	20.15
10e) Blast and Spray	35.02	20.15
11) Plumber (excluding HVAC pipe installation) (Trade License required: P-1,2,6,7,8,9 J-1,2,3,4 SP-1,2)	40.62	29.71
12) Well Digger, Pile Testing Machine	33.01	19.40 + a
13) Roofer (composition)	34.12	18.58

As of: **Monday, November 14, 2016**

Project: Maintenance Facilities Tank Replacement

14) Roofer (slate & tile)	34.62	18.58
15) Sheetmetal Worker (Trade License required for HVAC and Ductwork: SM-1,SM-2,SM-3,SM-4,SM-5,SM-6)	36.00	34.51
16) Pipefitter (Including HVAC work) (Trade License required: S-1,2,3,4,5,6,7,8 B-1,2,3,4 D-1,2,3,4, G-1, G-2, G-8 & G-9)	40.62	29.71
------TRUCK DRIVERS------		
17a) 2 Axle	28.83	21.39 + a
17b) 3 Axle, 2 Axle Ready Mix	28.93	21.39 + a

As of: **Monday, November 14, 2016**

17c) 3 Axle Ready Mix	28.98	21.39 + a
17d) 4 Axle, Heavy Duty Trailer up to 40 tons	29.03	21.39 + a
17e) 4 Axle Ready Mix	29.08	21.39 + a
17f) Heavy Duty Trailer (40 Tons and Over)	29.28	21.39 + a
17g) Specialized Earth Moving Equipment (Other Than Conventional Type on-the-Road Trucks and Semi-Trailers, Including Euclids)	29.08	21.39 + a
18) Sprinkler Fitter (Trade License required: F-1,2,3,4)	41.37	20.77 + a

19) Theatrical Stage Journeyman	25.76	7.34

Project: Maintenance Facilities Tank Replacement

Welders: Rate for craft to which welding is incidental.

**Note: Hazardous waste removal work receives additional $1.25 per hour for truck drivers.*

***Note: Hazardous waste premium $3.00 per hour over classified rate*

ALL Cranes: When crane operator is operating equipment that requires a fully licensed crane operator to operate he receives an extra $3.00 premium in addition to the hourly wage rate and benefit contributions:

1) Crane handling or erecting structural steel or stone; hoisting engineer (2 drums or over)

2) Cranes (100 ton rate capacity and over) Bauer Drill/Caisson

3) Cranes (under 100 ton rated capacity)

Crane with 150 ft. boom (including jib) - $1.50 extra
Crane with 200 ft. boom (including jib) - $2.50 extra
Crane with 250 ft. boom (including jib) - $5.00 extra
Crane with 300 ft. boom (including jib) - $7.00 extra
Crane with 400 ft. boom (including jib) - $10.00 extra

All classifications that indicate a percentage of the fringe benefits must be calculated at the percentage rate times the "base hourly rate".

Apprentices duly registered under the Commissioner of Labor's regulations on "Work Training Standards for Apprenticeship and Training Programs" Section 31-51-d-1 to 12, are allowed to be paid the appropriate percentage of the prevailing journeymen hourly base and the full fringe benefit rate, providing the work site ratio shall not be less than one full-time journeyperson instructing and supervising the work of each apprentice in a specific trade.

The Prevailing wage rates applicable to this project are subject to annual adjustments each July 1st for the duration of the project.

Each contractor shall pay the annual adjusted prevailing wage rate that is in effect each July 1st, as posted by the Department of Labor.

It is the contractor's responsibility to obtain the annual adjusted prevailing wage rate increases directly from the Department of Labor's website.

The annual adjustments will be posted on the Department of Labor's Web page: www.ct.gov/dol. For those without internet access, please contact the division listed below.

The Department of Labor will continue to issue the initial prevailing wage rate schedule to the Contracting Agency for the project.

All subsequent annual adjustments will be posted on our Web Site for contractor access.

Contracting Agencies are under no obligation pursuant to State labor law to pay any increase due to the annual adjustment provision.

As of: **Monday, November 14, 2016**

Project: Maintenance Facilities Tank Replacement

Effective October 1, 2005 - Public Act 05-50: any person performing the work of any mechanic, laborer, or worker shall be paid prevailing wage

All Person who perform work ON SITE must be paid prevailing wage for the appropriate mechanic, laborer, or worker classification.

All certified payrolls must list the hours worked and wages paid to All Persons who perform work ON SITE regardless of their ownership i.e.: (Owners, Corporate Officers, LLC Members, Independent Contractors, et. al)

Reporting and payment of wages is required regardless of any contractual relationship alleged to exist between the contractor and such person.

~~Unlisted classifications needed for work not included within the scope of the classifications listed may be added after award only as provided in the labor standards contract clause (29 CFR 5.5 (a) (1) (ii)).

Please direct any questions which you may have pertaining to classification of work and payment of prevailing wages to the Wage and Workplace Standards Division, telephone (860)263-6790.

As of: **Monday, November 14, 2016**

Project: Maintenance Facilities Tank Replacement

Minimum Rates and Classifications
for Heavy/Highway Construction

ID#: **H** 22883

Connecticut Department of Labor
Wage and Workplace Standards Division

By virtue of the authority vested in the Labor Commissioner under provisions of Section 31-53 of the General Statutes of Connecticut, as amended, the following are declared to be the prevailing rates and welfare payments and will apply only where the contract is advertised for bid within 20 days of the date on which the rates are established. Any contractor or subcontractor not obligated by agreement to pay to the welfare and pension fund shall pay this amount to each employee as part of his/her hourly wages.

Project Number:

Project Town: Glastonbury

FAP Number:

State Number: 171-418

Project: Maintenance Facilities Tank Replacement

CLASSIFICATION	Hourly Rate	Benefits
01) Asbestos/Toxic Waste Removal Laborers: Asbestos removal and encapsulation (except its removal from mechanical systems which are not to be scrapped), toxic waste removers, blasters. **See Laborers Group 5 and 7**		
1) Boilermaker	33.79	34% + 8.96
1a) Bricklayer, Cement Masons, Cement Finishers, Plasterers, Stone Masons	33.48	28.76
2) Carpenters, Piledrivermen	32.00	24.42

As of: Monday, November 14, 2016

Project: Maintenance Facilities Tank Replacement

2a) Diver Tenders	32.00	24.42
3) Divers	40.46	24.42
03a) Millwrights	32.47	24.84
4) Painters: (Bridge Construction) Brush, Roller, Blasting (Sand, Water, etc.), Spray	46.95	20.15
4a) Painters: Brush and Roller	32.02	20.15
4b) Painters: Spray Only	35.02	20.15
4c) Painters: Steel Only	34.02	20.15

As of: Monday, November 14, 2016

Project: Maintenance Facilities Tank Replacement

4d) Painters: Blast and Spray	35.02	20.15
4e) Painters: Tanks, Tower and Swing	34.02	20.15
5) Electrician (Trade License required: E-1,2 L-5,6 C-5,6 T-1,2 L-1,2 V-1,2,7,8,9)	38.65	24.42+3% of gross wage
6) Ironworkers: Ornamental, Reinforcing, Structural, and Precast Concrete Erection	35.22	31.99 + a
7) Plumbers (Trade License required: (P-1,2,6,7,8,9 J-1,2,3,4 SP-1,2) and Pipefitters (Including HVAC Work) (Trade License required: S-1,2,3,4,5,6,7,8 B-1,2,3,4 D-1,2,3,4 G-1, G-2, G-8, G-9)	40.62	29.71

----LABORERS---- -

8) Group 1: Laborer (Unskilled), Common or General, acetylene burner, concrete specialist	28.55	18.90

As of: Monday, November 14, 2016

Project: Maintenance Facilities Tank Replacement

9) Group 2: Chain saw operators, fence and guard rail erectors, pneumatic tool operators, powdermen	28.80	18.90
10) Group 3: Pipelayers	29.05	18.90
11) Group 4: Jackhammer/Pavement breaker (handheld); mason tenders (cement/concrete), catch basin builders, asphalt rakers, air track operators, block paver, curb setter and forklift operators	29.05	18.90
12) Group 5: Toxic waste removal (non-mechanical systems)	30.55	18.90
13) Group 6: Blasters	30.30	18.90
Group 7: Asbestos/lead removal, non-mechanical systems (does not include leaded joint pipe)	29.55	18.90
Group 8: Traffic control signalmen	16.00	18.90

As of: Monday, November 14, 2016

Project: Maintenance Facilities Tank Replacement

Group 9: Hydraulic Drills	29.30	18.90

----LABORERS (TUNNEL CONSTRUCTION, FREE AIR). Shield Drive and Liner Plate Tunnels in Free Air.----

13a) Miners, Motormen, Mucking Machine Operators, Nozzle Men, Grout Men, Shaft & Tunnel Steel & Rodmen, Shield & Erector, Arm Operator, Cable Tenders	32.22	18.90 + a
13b) Brakemen, Trackmen	31.28	18.90 + a

----CLEANING, CONCRETE AND CAULKING TUNNEL----

14) Concrete Workers, Form Movers, and Strippers	31.28	18.90 + a
15) Form Erectors	31.60	18.90 + a

As of: Monday, November 14, 2016

Project: Maintenance Facilities Tank Replacement

----ROCK SHAFT LINING, CONCRETE, LINING OF SAME AND TUNNEL IN FREE AIR:----

16) Brakemen, Trackmen, Tunnel Laborers, Shaft Laborers	31.28	18.90 + a
17) Laborers Topside, Cage Tenders, Bellman	31.17	18.90 + a
18) Miners	32.22	18.90 + a

----TUNNELS, CAISSON AND CYLINDER WORK IN COMPRESSED AIR: ----

18a) Blaster	38.53	18.90 + a
19) Brakemen, Trackmen, Groutman, Laborers, Outside Lock Tender, Gauge Tenders	38.34	18.90 + a

As of: Monday, November 14, 2016

Project: Maintenance Facilities Tank Replacement

20) Change House Attendants, Powder Watchmen, Top on Iron Bolts	36.41	18.90 + a
21) Mucking Machine Operator	39.11	18.90 + a
----TRUCK DRIVERS----(*see note below)		
Two axle trucks	28.83	21.39 + a
Three axle trucks; two axle ready mix	28.93	21.39 + a
Three axle ready mix	28.98	21.39 + a
Four axle trucks, heavy duty trailer (up to 40 tons)	29.03	21.39 + a

As of: Monday, November 14, 2016

Project: Maintenance Facilities Tank Replacement

Four axle ready-mix	29.08	21.39 + a
Heavy duty trailer (40 tons and over)	29.28	21.39 + a
Specialized earth moving equipment other than conventional type on-the road trucks and semi-trailer (including Euclids)	29.08	21.39 + a
----POWER EQUIPMENT OPERATORS----		
Group 1: Crane handling or erecting structural steel or stone, hoisting engineer (2 drums or over), front end loader (7 cubic yards or over), Work Boat 26 ft. & Over, Tunnel Boring Machines. (Trade License Required)	38.55	23.55 + a
Group 2: Cranes (100 ton rate capacity and over); Excavator over 2 cubic yards; Piledriver ($3.00 premium when operator controls hammer); Bauer Drill/Caisson. (Trade License Required)	38.23	23.55 + a
Group 3: Excavator/Backhoe under 2 cubic yards; Cranes (under 100 ton rated capacity), Gradall; Master Mechanic; Hoisting Engineer (all types of equipment where a drum and cable are used to hoist or drag material regardless of motive power of operation), Rubber Tire Excavator (Drott-1085 or similar);Grader Operator; Bulldozer Fine Grade (slopes, shaping, laser or GPS, etc.). (Trade License Required)	37.49	23.55 + a

As of: Monday, November 14, 2016

Project: Maintenance Facilities Tank Replacement

Group 4: Trenching Machines; Lighter Derrick; Concrete Finishing Machine; CMI Machine or Similar; Koehring Loader (Skooper)	37.10	23.55 + a
Group 5: Specialty Railroad Equipment; Asphalt Paver; Asphalt Spreader; Asphalt Reclaiming Machine; Line Grinder; Concrete Pumps; Drills with Self Contained Power Units; Boring Machine; Post Hole Digger; Auger; Pounder; Well Digger; Milling Machine (over 24" Mandrell)	36.51	23.55 + a
Group 5 continued: Side Boom; Combination Hoe and Loader; Directional Driller.	36.51	23.55 + a
Group 6: Front End Loader (3 up to 7 cubic yards); Bulldozer (rough grade dozer).	36.20	23.55 + a
Group 7: Asphalt Roller; Concrete Saws and Cutters (ride on types); Vermeer Concrete Cutter; Stump Grinder; Scraper; Snooper; Skidder; Milling Machine (24" and Under Mandrel).	35.86	23.55 + a
Group 8: Mechanic, Grease Truck Operator, Hydroblaster, Barrier Mover, Power Stone Spreader; Welder; Work Boat under 26 ft.; Transfer Machine.	35.46	23.55 + a
Group 9: Front End Loader (under 3 cubic yards), Skid Steer Loader regardless of attachments (Bobcat or Similar); Fork Lift, Power Chipper; Landscape Equipment (including hydroseeder).	35.03	23.55 + a

As of: Monday, November 14, 2016

Project: Maintenance Facilities Tank Replacement

Group 10: Vibratory Hammer, Ice Machine, Diesel and Air Hammer, etc.	32.99	23.55 + a
Group 11: Conveyor, Earth Roller; Power Pavement Breaker (whiphammer), Robot Demolition Equipment.	32.99	23.55 + a
Group 12: Wellpoint Operator.	32.93	23.55 + a
Group 13: Compressor Battery Operator.	32.35	23.55 + a
Group 14: Elevator Operator; Tow Motor Operator (Solid Tire No Rough Terrain).	31.21	23.55 + a
Group 15: Generator Operator; Compressor Operator; Pump Operator; Welding Machine Operator; Heater Operator.	30.80	23.55 + a
Group 16: Maintenance Engineer/Oiler	30.15	23.55 + a

As of: Monday, November 14, 2016

Project: Maintenance Facilities Tank Replacement

Group 17: Portable asphalt plant operator; portable crusher plant operator; portable concrete plant operator.	34.46	23.55 + a
Group 18: Power Safety Boat; Vacuum Truck; Zim Mixer; Sweeper; (minimum for any job requiring CDL license).	32.04	23.55 + a

**NOTE: SEE BELOW

----LINE CONSTRUCTION----(Railroad Construction and Maintenance)----

20) Lineman, Cable Splicer, Technician	45.43	6.25% + 20.70
21) Heavy Equipment Operator	40.89	6.25% + 18.56
22) Equipment Operator, Tractor Trailer Driver, Material Men	38.62	6.25% + 17.99

As of: Monday, November 14, 2016

Project: Maintenance Facilities Tank Replacement

23) Driver Groundmen	24.99	6.25% + 11.81
23a) Truck Driver	34.07	6.25% + 16.60
----LINE CONSTRUCTION----		
24) Driver Groundmen	30.92	6.5% + 9.70
25) Groundmen	22.67	6.5% + 6.20
26) Heavy Equipment Operators	37.10	6.5% + 10.70
27) Linemen, Cable Splicers, Dynamite Men	41.22	6.5% + 12.20

As of: Monday, November 14, 2016

Project: Maintenance Facilities Tank Replacement

28) Material Men, Tractor Trailer Drivers, Equipment Operators	35.04	6.5% + 10.45

As of: Monday, November 14, 2016

Project: Maintenance Facilities Tank Replacement

Welders: Rate for craft to which welding is incidental.

**Note: Hazardous waste removal work receives additional $1.25 per hour for truck drivers.*

***Note: Hazardous waste premium $3.00 per hour over classified rate*

ALL Cranes: When crane operator is operating equipment that requires a fully licensed crane operator to operate he receives an extra $3.00 premium in addition to the hourly wage rate and benefit contributions:

1) Crane handling or erecting structural steel or stone; hoisting engineer (2 drums or over)

2) Cranes (100 ton rate capacity and over) Bauer Drill/Caisson

3) Cranes (under 100 ton rated capacity)

Crane with 150 ft. boom (including jib) - $1.50 extra
Crane with 200 ft. boom (including jib) - $2.50 extra
Crane with 250 ft. boom (including jib) - $5.00 extra
Crane with 300 ft. boom (including jib) - $7.00 extra
Crane with 400 ft. boom (including jib) - $10.00 extra

All classifications that indicate a percentage of the fringe benefits must be calculated at the percentage rate times the "base hourly rate".

Apprentices duly registered under the Commissioner of Labor's regulations on "Work Training Standards for Apprenticeship and Training Programs" Section 31-51-d-1 to 12, are allowed to be paid the appropriate percentage of the prevailing journeymen hourly base and the full fringe benefit rate, providing the work site ratio shall not be less than one full-time journeyperson instructing and supervising the work of each apprentice in a specific trade.

~~Connecticut General Statute Section 31-55a: Annual Adjustments to wage rates by contractors doing state work ~~

The Prevailing wage rates applicable to this project are subject to annual adjustments each July 1st for the duration of the project.

Each contractor shall pay the annual adjusted prevailing wage rate that is in effect each July 1st, as posted by the Department of Labor.

It is the contractor's responsibility to obtain the annual adjusted prevailing wage rate increases directly from the Department of Labor's website.

The annual adjustments will be posted on the Department of Labor's Web page: www.ct.gov/dol.

The Department of Labor will continue to issue the initial prevailing wage rate schedule to the Contracting Agency for the project.

All subsequent annual adjustments will be posted on our Web Site for contractor access.

Contracting Agencies are under no obligation pursuant to State labor law to pay any increase due to the annual adjustment provision.

As of: Monday, November 14, 2016

Project: Maintenance Facilities Tank Replacement

Effective October 1, 2005 - Public Act 05-50: any person performing the work of any mechanic, laborer, or worker shall be paid prevailing wage

All Person who perform work ON SITE must be paid prevailing wage for the appropriate mechanic, laborer, or worker classification.

All certified payrolls must list the hours worked and wages paid to All Persons who perform work ON SITE regardless of their ownership i.e.: (Owners, Corporate Officers, LLC Members, Independent Contractors, et. al)

Reporting and payment of wages is required regardless of any contractual relationship alleged to exist between the contractor and such person.

~~Unlisted classifications needed for work not included within the scope of the classifications listed may be added after award only as provided in the labor standards contract clause (29 CFR 5.5 (a) (1) (ii)).

Please direct any questions which you may have pertaining to classification of work and payment of prevailing wages to the Wage and Workplace Standards Division, telephone (860)263-6790.

As of: Monday, November 14, 2016

Minimum Rates and Classifications for Building Construction

ID# : B 22883

Connecticut Department of Labor
Wage and Workplace Standards Division

By virtue of the authority vested in the Labor Commissioner under provisions of Section 31-53 of the General Statutes of Connecticut, as amended, the following are declared to be the prevailing rates and welfare payments and will apply only where the contract is advertised for bid within 20 days of the date on which the rates are established. Any contractor or subcontractor not obligated by agreement to pay to the welfare and pension fund shall pay this amount to each employee as part of his/her hourly wages.

Project Number:
State#: 171-418

Project Town: Glastonbury
FAP#:

Project: Maintenance Facilities Tank Replacement

CLASSIFICATION	Hourly Rate	Benefits
1a) Asbestos Worker/Insulator (Includes application of insulating materials, protective coverings, coatings, & finishes to all types of mechanical systems; application of firestopping material for wall openings & penetrations in walls, floors, ceilings	35.75	28.82
1b) Asbestos/Toxic Waste Removal Laborers: Asbestos removal and encapsulation (except its removal from mechanical systems which are not to be scrapped), toxic waste removers, blasters.**See Laborers Group 7**		
1c) Asbestos Worker/Heat and Frost Insulator	37.15	27.56

As of: **Monday, November 14, 2016**

Project: Maintenance Facilities Tank Replacement

2) Boilermaker	35.24	25.01
3a) Bricklayer, Cement Mason, Concrete Finisher (including caulking), Stone Masons	33.48	29.16 + a
3b) Tile Setter	34.30	24.15
3c) Terrazzo Mechanics and Marble Setters	31.69	22.35
3d) Tile, Marble & Terrazzo Finishers	26.43	20.59
3e) Plasterer	33.48	29.16

As of: **Monday, November 14, 2016**

Project: Maintenance Facilities Tank Replacement

------LABORERS------

4) Group 1: Laborers (common or general), acetylene burners, carpenter tenders, concrete specialists, wrecking laborers, fire watchers.	28.55	18.90
4a) Group 2: Mortar mixers, plaster tender, power buggy operators, powdermen, fireproofer/mixer/nozzleman (Person running mixer and spraying fireproof only).	28.80	18.90
4b) Group 3: Jackhammer operators/pavement breaker, mason tender (brick), mason tender (cement/concrete), forklift operators and forklift operators (masonry).	29.05	18.90
4c) **Group 4: Pipelayers (Installation of water, storm drainage or sewage lines outside of the building line with P6, P7 license) (the pipelayer rate shall apply only to one or two employees of the total crew who primary task is to actually perform the mating of pipe sections) P6 and P7 rate is $26.80.	28.80	18.90
4d) Group 5: Air track operator, sand blaster and hydraulic drills.	29.30	18.90

As of: **Monday, November 14, 2016**

4e) Group 6: Blasters, nuclear and toxic waste removal.	31.55	18.90
4f) Group 7: Asbestos/lead removal and encapsulation (except it's removal from mechanical systems which are not to be scrapped).	29.55	18.90
4g) Group 8: Bottom men on open air caisson, cylindrical work and boring crew.	28.38	18.90
4h) Group 9: Top men on open air caisson, cylindrical work and boring crew.	27.86	18.90
4i) Group 10: Traffic Control Signalman	16.00	18.90
5) Carpenter, Acoustical Ceiling Installation, Soft Floor/Carpet Laying, Metal Stud Installation, Form Work and Scaffold Building, Drywall Hanging, Modular-Furniture Systems Installers, Lathers, Piledrivers, Resilient Floor Layers.	32.00	24.42

Project: Maintenance Facilities Tank Replacement

5a) Millwrights	32.47	24.84
6) Electrical Worker (including low voltage wiring) (Trade License required: E1,2 L-5,6 C-5,6 T-1,2 L-1,2 V-1,2,7,8,9)	38.65	24.42+3% of gross wage
7a) Elevator Mechanic (Trade License required: R-1,2,5,6)	49.00	29.985+a+b
-----LINE CONSTRUCTION----		
Groundman	24.99	6.25%+11.81
Linemen/Cable Splicer	45.43	6.25%+20.70

As of: **Monday, November 14, 2016**

8) Glazier (Trade License required: FG-1,2)	35.58	20.15 + a
9) Ironworker, Ornamental, Reinforcing, Structural, and Precast Concrete Erection	35.22	31.99 + a
----OPERATORS----		
Group 1: Crane handling or erecting structural steel or stone, hoisting engineer 2 drums or over, front end loader (7 cubic yards or over), work boat 26 ft. and over and Tunnel Boring Machines. (Trade License Required)	38.55	23.55 + a
Group 2: Cranes (100 ton rate capacity and over); Excavator over 2 cubic yards; Piledriver ($3.00 premium when operator controls hammer); Bauer Drill/Caisson. (Trade License Required)	38.23	23.55 + a
Group 3: Excavator; Backhoe/Excavator under 2 cubic yards; Cranes (under 100 ton rated capacity), Grader/Blade; Master Mechanic; Hoisting Engineer (all types of equipment where a drum and cable are used to hoist or drag material regardless of motive power of operation), Rubber Tire Excavator (Drott-1085 or similar);Grader Operator; Bulldozer Fine Grade. (slopes, shaping, laser or GPS, etc.). (Trade License Required)	37.49	23.55 + a

Project: Maintenance Facilities Tank Replacement

Group 4: Trenching Machines; Lighter Derrick; Concrete Finishing Machine; CMI Machine or Similar; Koehring Loader (Skooper).	37.10	23.55 + a
Group 5: Specialty Railroad Equipment; Asphalt Paver; Asphalt Reclaiming Machine; Line Grinder; Concrete Pumps; Drills with Self Contained Power Units; Boring Machine; Post Hole Digger; Auger; Pounder; Well Digger; Milling Machine (over 24" Mandrell)	36.51	23.55 + a
Group 5 continued: Side Boom; Combination Hoe and Loader; Directional Driller; Pile Testing Machine.	36.51	23.55 + a
Group 6: Front End Loader (3 up to 7 cubic yards); Bulldozer (rough grade dozer).	36.20	23.55 + a
Group 7: Asphalt roller, concrete saws and cutters (ride on types), vermeer concrete cutter, Stump Grinder; Scraper; Snooper; Skidder; Milling Machine (24" and under Mandrell).	35.86	23.55 + a
Group 8: Mechanic, grease truck operator, hydroblaster; barrier mover; power stone spreader; welding; work boat under 26 ft.; transfer machine.	35.46	23.55 + a

As of: **Monday, November 14, 2016**

Group 9: Front end loader (under 3 cubic yards), skid steer loader regardless of attachments, (Bobcat or Similar): forklift, power chipper; landscape equipment (including Hydroseeder).	35.03	23.55 + a
Group 10: Vibratory hammer; ice machine; diesel and air, hammer, etc.	32.99	23.55 + a
Group 11: Conveyor, earth roller, power pavement breaker (whiphammer), robot demolition equipment.	32.99	23.55 + a
Group 12: Wellpoint operator.	32.93	23.55 + a
Group 13: Compressor battery operator.	32.35	23.55 + a
Group 14: Elevator operator; tow motor operator (solid tire no rough terrain).	31.21	23.55 + a

As of: **Monday, November 14, 2016**

Group 15: Generator Operator; Compressor Operator; Pump Operator; Welding Machine Operator; Heater Operator.	30.80	23.55 + a
Group 16: Maintenance Engineer/Oiler.	30.15	23.55 + a
Group 17: Portable asphalt plant operator; portable crusher plant operator; portable concrete plant operator.	34.46	23.55 + a
Group 18: Power safety boat; vacuum truck; zim mixer; sweeper; (Minimum for any job requiring a CDL license).	32.04	23.55 + a
------PAINTERS (Including Drywall Finishing)------		
10a) Brush and Roller	32.02	20.15

Project: Maintenance Facilities Tank Replacement

10b) Taping Only/Drywall Finishing	32.77	20.15
10c) Paperhanger and Red Label	32.52	20.15
10e) Blast and Spray	35.02	20.15
11) Plumber (excluding HVAC pipe installation) (Trade License required: P-1,2,6,7,8,9 J-1,2,3,4 SP-1,2)	40.62	29.71
12) Well Digger, Pile Testing Machine	33.01	19.40 + a
13) Roofer (composition)	34.12	18.58

As of: **Monday, November 14, 2016**

Project: Maintenance Facilities Tank Replacement

14) Roofer (slate & tile)	34.62	18.58
15) Sheetmetal Worker (Trade License required for HVAC and Ductwork: SM-1,SM-2,SM-3,SM-4,SM-5,SM-6)	36.00	34.51
16) Pipefitter (Including HVAC work) (Trade License required: S-1,2,3,4,5,6,7,8 B-1,2,3,4 D-1,2,3,4, G-1, G-2, G-8 & G-9)	40.62	29.71
------TRUCK DRIVERS------		
17a) 2 Axle	28.83	21.39 + a
17b) 3 Axle, 2 Axle Ready Mix	28.93	21.39 + a

As of: **Monday, November 14, 2016**

17c) 3 Axle Ready Mix	28.98	21.39 + a
17d) 4 Axle, Heavy Duty Trailer up to 40 tons	29.03	21.39 + a
17e) 4 Axle Ready Mix	29.08	21.39 + a
17f) Heavy Duty Trailer (40 Tons and Over)	29.28	21.39 + a
17g) Specialized Earth Moving Equipment (Other Than Conventional Type on-the-Road Trucks and Semi-Trailers, Including Euclids)	29.08	21.39 + a
18) Sprinkler Fitter (Trade License required: F-1,2,3,4)	41.37	20.77 + a

19) Theatrical Stage Journeyman	25.76	7.34

Project: Maintenance Facilities Tank Replacement

Welders: Rate for craft to which welding is incidental.

**Note: Hazardous waste removal work receives additional $1.25 per hour for truck drivers.*

***Note: Hazardous waste premium $3.00 per hour over classified rate*

ALL Cranes: When crane operator is operating equipment that requires a fully licensed crane operator to operate he receives an extra $3.00 premium in addition to the hourly wage rate and benefit contributions:

1) Crane handling or erecting structural steel or stone; hoisting engineer (2 drums or over)

2) Cranes (100 ton rate capacity and over) Bauer Drill/Caisson

3) Cranes (under 100 ton rated capacity)

Crane with 150 ft. boom (including jib) - $1.50 extra
Crane with 200 ft. boom (including jib) - $2.50 extra
Crane with 250 ft. boom (including jib) - $5.00 extra
Crane with 300 ft. boom (including jib) - $7.00 extra
Crane with 400 ft. boom (including jib) - $10.00 extra

All classifications that indicate a percentage of the fringe benefits must be calculated at the percentage rate times the "base hourly rate".

Apprentices duly registered under the Commissioner of Labor's regulations on "Work Training Standards for Apprenticeship and Training Programs" Section 31-51-d-1 to 12, are allowed to be paid the appropriate percentage of the prevailing journeymen hourly base and the full fringe benefit rate, providing the work site ratio shall not be less than one full-time journeyperson instructing and supervising the work of each apprentice in a specific trade.

The Prevailing wage rates applicable to this project are subject to annual adjustments each July 1st for the duration of the project.

Each contractor shall pay the annual adjusted prevailing wage rate that is in effect each July 1st, as posted by the Department of Labor.

It is the contractor's responsibility to obtain the annual adjusted prevailing wage rate increases directly from the Department of Labor's website.

The annual adjustments will be posted on the Department of Labor's Web page: www.ct.gov/dol. For those without internet access, please contact the division listed below.

The Department of Labor will continue to issue the initial prevailing wage rate schedule to the Contracting Agency for the project.

All subsequent annual adjustments will be posted on our Web Site for contractor access.

Contracting Agencies are under no obligation pursuant to State labor law to pay any increase due to the annual adjustment provision.

As of: **Monday, November 14, 2016**

Project: Maintenance Facilities Tank Replacement

Effective October 1, 2005 - Public Act 05-50: any person performing the work of any mechanic, laborer, or worker shall be paid prevailing wage

All Person who perform work ON SITE must be paid prevailing wage for the appropriate mechanic, laborer, or worker classification.

All certified payrolls must list the hours worked and wages paid to All Persons who perform work ON SITE regardless of their ownership i.e.: (Owners, Corporate Officers, LLC Members, Independent Contractors, et. al)

Reporting and payment of wages is required regardless of any contractual relationship alleged to exist between the contractor and such person.

~~Unlisted classifications needed for work not included within the scope of the classifications listed may be added after award only as provided in the labor standards contract clause (29 CFR 5.5 (a) (1) (ii)).

Please direct any questions which you may have pertaining to classification of work and payment of prevailing wages to the Wage and Workplace Standards Division, telephone (860)263-6790.

As of: **Monday, November 14, 2016**

Connecticut Department of Labor
Wage and Workplace Standards Division
FOOTNOTES

Please Note: If the "Benefits" listed on the schedule for the following occupations includes a letter(s) (+ a or + a+b for instance), refer to the information below.

Benefits to be paid at the appropriate prevailing wage rate for the listed occupation.

If the "Benefits" section for the occupation lists only a dollar amount, disregard the information below.

Bricklayers, Cement Masons, Cement Finishers, Concrete Finishers, Stone Masons
(Building Construction) and
(Residential- Hartford, Middlesex, New Haven, New London and Tolland Counties)

a. Paid Holiday: Employees shall receive 4 hours for Christmas Eve holiday provided the employee works the regularly scheduled day before and after the holiday. Employers may schedule work on Christmas Eve and employees shall receive pay for actual hours worked in addition to holiday pay.

Elevator Constructors: Mechanics

a. Paid Holidays: New Year's Day, Memorial Day, Independence Day, Labor Day, Veterans' Day, Thanksgiving Day, Christmas Day, plus the Friday after Thanksgiving.

b. Vacation: Employer contributes 8% of basic hourly rate for 5 years or more of service or 6% of basic hourly rate for 6 months to 5 years of service as vacation pay credit.

Glaziers

a. Paid Holidays: Labor Day and Christmas Day.

Power Equipment Operators
(Heavy and Highway Construction & Building Construction)

a. Paid Holidays: New Year's Day, Good Friday, Memorial day, Independence Day, Labor Day, Thanksgiving Day and Christmas Day, provided the employee works 3 days during the week in which the holiday falls, if scheduled, and if scheduled, the working day before and the working day after the holiday. Holidays falling on Saturday may be observed on Saturday, or if the employer so elects, on the preceding Friday.

Ironworkers

a. Paid Holiday: Labor Day provided employee has been on the payroll for the 5 consecutive work days prior to Labor Day.

Laborers (Tunnel Construction)

a. Paid Holidays: New Year's Day, Memorial Day, Independence Day, Labor Day, Thanksgiving Day and Christmas Day. No employee shall be eligible for holiday pay when he fails, without cause, to work the regular work day preceding the holiday or the regular work day following the holiday.

Roofers

a. Paid Holidays: July 4th, Labor Day, and Christmas Day provided the employee is employed 15 days prior to the holiday.

Sprinkler Fitters

a. Paid Holidays: Memorial Day, July 4th, Labor Day, Thanksgiving Day and Christmas Day, provided the employee has been in the employment of a contractor 20 working days prior to any such paid holiday.

Truck Drivers

(Heavy and Highway Construction & Building Construction)

a. Paid Holidays: New Year's Day, Memorial Day, Independence Day, Labor Day, Thanksgiving Day, Christmas day, and Good Friday, provided the employee has at least 31 calendar days of service and works the last scheduled day before and the first scheduled day after the holiday, unless excused.

Information Bulletin
Occupational Classifications

The Connecticut Department of Labor has the responsibility to properly determine "job classification" on prevailing wage projects covered under C.G.S. Section 31-53.

Note: This information is intended to provide a sample of some occupational classifications for guidance purposes only. It is not an all-inclusive list of each occupation's duties. This list is being provided only to highlight some areas where a contractor may be unclear regarding the proper classification.

Below are additional clarifications of specific job duties performed for certain classifications:

- **ASBESTOS WORKERS**

  Applies all insulating materials, protective coverings, coatings and finishes to all types of mechanical systems.

- **ASBESTOS INSULATOR**

  Handle, install apply, fabricate, distribute, prepare, alter, repair, dismantle, heat and frost insulation, including penetration and fire stopping work on all penetration fire stop systems.

- **BOILERMAKERS**

  Erects hydro plants, incomplete vessels, steel stacks, storage tanks for water, fuel, etc. Builds incomplete boilers, repairs heat exchanges and steam generators.

- **BRICKLAYERS, CEMENT MASONS, CEMENT FINISHERS, MARBLE MASONS, PLASTERERS, STONE MASONS, PLASTERERS. STONE MASONS, TERRAZZO WORKERS, TILE SETTERS**

  Lays building materials such as brick, structural tile and concrete cinder, glass, gypsum, terra cotta block. Cuts, tools and sets marble, sets stone, finishes concrete, applies decorative steel, aluminum and plastic tile, applies cements, sand, pigment and marble chips to floors, stairways, etc.

- **CARPENTERS, MILLWRIGHTS. PILEDRIVERMEN. LATHERS. RESILEINT FLOOR LAYERS, DOCK BUILDERS, DIKERS, DIVER TENDERS**

  Constructs, erects, installs and repairs structures and fixtures of wood, plywood and wallboard. Installs, assembles, dismantles, moves industrial machinery. Drives piling into ground to provide foundations for structures such as buildings and bridges, retaining walls for earth embankments, such as cofferdams. Fastens wooden, metal or rockboard lath to walls, ceilings and partitions of buildings, acoustical tile layer, concrete form builder. Applies firestopping materials on fire resistive joint systems only. Installation of curtain/window walls only where attached to wood or metal studs. Installation of insulated material of all types whether blown, nailed or attached in other ways to walls, ceilings and floors of buildings. Assembly and installation of modular furniture/furniture systems. Free-standing furniture is not covered. This includes free standing: student chairs, study top desks, book box desks, computer furniture, dictionary stand, atlas stand, wood shelving, two-position information access station, file cabinets, storage cabinets, tables, etc.

- **CLEANING LABORER**

  The clean up of any construction debris and the general cleaning, including sweeping, wash down, mopping, wiping of the construction facility, washing, polishing, dusting, etc., prior to the issuance of a certificate of occupancy falls under the *Labor classification.*

- **DELIVERY PERSONNEL**

  If delivery of supplies/building materials is to one common point and stockpiled there, prevailing wages are not required. If the delivery personnel are involved in the distribution of the material to multiple locations within the construction site then they would have to be paid prevailing wages for the type of work performed: laborer, equipment operator, electrician, ironworker, plumber, etc.

  An example of this would be where delivery of drywall is made to a building and the delivery personnel distribute the drywall from one "stockpile" location to further sub-locations on each floor. Distribution of material around a construction site is the job of a laborer/tradesman and not a delivery personnel.

- **ELECTRICIANS**

  Install, erect, maintenance, alteration or repair of any wire, cable, conduit, etc., which generates, transforms, transmits or uses electrical energy for light, heat, power or other purposes, including the Installation or maintenance of telecommunication, LAN wiring or computer equipment, and low voltage wiring. ***License required per Connecticut General Statutes: E-1,2 L-5,6 C-5,6 T-1,2 L-1,2 V-1,2,7,8,9.**

- **ELEVATOR CONSTRUCTORS**

  Install, erect, maintenance and repair of all types of elevators, escalators, dumb waiters and moving walks. ***License required by Connecticut General Statutes: R-1,2,5,6.**

- **FORK LIFT OPERATOR**

  Laborers Group 4) Mason Tenders - operates forklift solely to assist a mason to a maximum height of nine (9) feet only.

  Power Equipment Operator Group 9 - operates forklift to assist any trade, and to assist a mason to a height over nine (9) feet.

- **GLAZIERS**

  Glazing wood and metal sash, doors, partitions, and 2 story aluminum storefronts. Installs glass windows, skylights, store fronts and display cases or surfaces such as building fronts, interior walls, ceilings and table tops and metal store fronts. Installation of aluminum window walls and curtain walls is the "joint" work of glaziers and ironworkers which requires either a blended rate or equal composite workforce.

- **IRONWORKERS**

  Erection, installation and placement of structural steel, precast concrete, miscellaneous iron, ornamental iron, metal curtain wall, rigging and reinforcing steel. Handling, sorting, and installation of reinforcing steel (rebar). Metal bridge rail (traffic), metal bridge handrail, and decorative security fence installation. Installation of aluminum window walls and curtain walls is the "joint" work of glaziers and ironworkers which requires either a blended rate or equal composite workforce. Insulated metal and insulated composite panels are still installed by the Ironworker.

- **INSULATOR**

  Installing fire stopping systems/materials for "Penetration Firestop Systems": transit to cables, electrical conduits, insulated pipes, sprinkler pipe penetrations, ductwork behind radiation, electrical cable trays, fire rated pipe penetrations, natural polypropylene, HVAC ducts, plumbing bare metal, telephone and communication wires, and boiler room ceilings. Past practice using the applicable licensed trades, Plumber, Sheet Metal, Sprinkler Fitter, and Electrician, is not inconsistent with the Insulator classification and would be permitted.

- **LABORERS**

  Acetylene burners, asphalt rakers, chain saw operators, concrete and power buggy operator, concrete saw operator, fence and guard rail erector (except metal bridge rail (traffic), metal bridge handrail, and decorative security fence installation.), hand operated concrete vibrator operator, mason tenders, pipelayers (installation of storm drainage or sewage lines on the street only), pneumatic drill operator, pneumatic gas and electric drill operator, powermen and wagon drill operator, air track operator, block paver, curb setters, blasters, concrete spreaders.

- **PAINTERS**

  Maintenance, preparation, cleaning, blasting (water and sand, etc.), painting or application of any protective coatings of every description on all bridges and appurtenances of highways, roadways, and railroads. Painting, decorating, hardwood finishing, paper hanging, sign writing, scenic art work and drywall hhg for any and all types of building and residential work.

- **LEAD PAINT REMOVAL**

  Painter's Rate
  1. Removal of lead paint from bridges.
  2. Removal of lead paint as preparation of any surface to be repainted.
  3. Where removal is on a Demolition project prior to reconstruction.

  Laborer's Rate
  1. Removal of lead paint from any surface NOT to be repainted.
  2. Where removal is on a *TOTAL* Demolition project only.

- **PLUMBERS AND PIPEFITTERS**

  Installation, repair, replacement, alteration or maintenance of all plumbing, heating, cooling and piping. ***License required per Connecticut General Statutes: P-1,2,6,7,8,9 J-1,2,3,4 SP-1,2 S-1,2,3,4,5,6,7,8 B-1,2,3,4 D-1,2,3,4.***

- **POWER EQUIPMENT OPERATORS**

  Operates several types of power construction equipment such as compressors, pumps, hoists, derricks, cranes, shovels, tractors, scrapers or motor graders, etc. Repairs and maintains equipment. ***License required, crane operators only, per Connecticut General Statutes.**

- **ROOFERS**

  Covers roofs with composition shingles or sheets, wood shingles, slate or asphalt and gravel to waterproof roofs, including preparation of surface. (tear-off and/or removal of any type of roofing and/or clean-up of any and all areas where a roof is to be relaid)

- **SHEETMETAL WORKERS**

  Fabricate, assembles, installs and repairs sheetmetal products and equipment in such areas as ventilation, air-conditioning, warm air heating, restaurant equipment, architectural sheet metal work, sheetmetal roofing, and aluminum gutters. Fabrication, handling, assembling, erecting, altering, repairing, etc. of coated metal material panels and composite metal material panels when used on building exteriors and interiors as soffits, facia, louvers, partitions, wall panel siding, canopies, cornice, column covers, awnings, beam covers, cladding, sun shades, lighting troughs, spires, ornamental roofing, metal ceilings, mansards, copings, ornamental and ventilation hoods, vertical and horizontal siding panels, trim, etc. The sheet metal classification also applies to the vast variety of coated metal material panels and composite metal material panels that have evolved over the years as an alternative to conventional ferrous and non-ferrous metals like steel, iron, tin, copper, brass, bronze, aluminum, etc. Insulated metal and insulated composite panels are still installed by the Iron Worker. Fabrication, handling, assembling, erecting, altering, repairing, etc. of architectural metal roof, standing seam roof, composite metal roof, metal and composite bathroom/toilet partitions, aluminum gutters, metal and composite lockers and shelving, kitchen equipment, and walk-in coolers.

- **SPRINKLER FITTERS**

  Installation, alteration, maintenance and repair of fire protection sprinkler systems. ***License required per Connecticut General Statutes: F-1,2,3,4.**

- **TILE MARBLE AND TERRAZZO FINISHERS**

  Assists and tends the tile setter, marble mason and terrazzo worker in the performance of their duties.

- **TRUCK DRIVERS**

Definitions:

1) "Site of the work" (29 Code of Federal Regulations (CFR) 5.2(l)(b) is the physical place or places where the building or work called for in the contract will remain and any other site where a significant portion of the building or work is constructed, provided that such site is established specifically for the performance of the contact or project;

(a) Except as provided in paragraph (l) (3) of this section, job headquarters, tool yards, batch plants, borrow pits, etc. are part of the "site of the work"; provided they are dedicated exclusively, or nearly so, to the performance of the contract or project, and provided they are adjacent to "the site of work" as defined in paragraph (e)(1) of this section;

(b) Not included in the "site of the work" are permanent home offices, branch plant establishments, fabrication plants, tool yards etc, of a contractor or subcontractor whose location and continuance in operation are determined wholly without regard to a particular State or political subdivision contract or uncertain and indefinite periods of time involved of a few seconds or minutes duration and where the failure to count such time is due to consideration justified by industrial realities (29 CFR 785.47)

2) "Engaged to wait" is waiting time that belongs to and is controlled by the employer which is an integral part of the job and is therefore compensable as hours worked. (29 CFR 785.15)

3) "Waiting to be engaged" is waiting time that an employee can use effectively for their own purpose and is not compensable as hours worked. (29 CFR 785.16)

4) "De Minimus" is a rule that recognizes that unsubstantial or insignificant periods of time which cannot as a practical administrative matter be precisely recorded for payroll purposes, may be disregarded. This rule applies only where there are uncertain and indefinite periods of time involved of a short duration and where the failure to count such time is due to consideration justified by worksite realities. For example, with respect to truck drivers on prevailing wage sites, this is typically less than 15 minutes at a time.

Coverage of Truck Drivers on State or Political subdivision Prevailing Wage Projects

Truck drivers <u>are covered</u> for payroll purposes under the following conditions:

- Truck Drivers for time spent working on the site of the work.

- Truck Drivers for time spent loading and/or unloading materials and supplies on the site of the work, if such time is not de minimus

- Truck drivers transporting materials or supplies between a facility that is deemed part of the site of the work and the actual construction site.

- Truck drivers transporting portions of the building or work between a site established specifically for the performance of the contract or project where a significant portion of such building or work is constructed and the physical places where the building or work outlined in the contract will remain.

For example: Truck drivers delivering asphalt are covered under prevailing wage while" engaged to wait" on the site and when directly involved in the paving operation, provided the total time is not "de minimus"

Truck Drivers <u>are not</u> covered in the following instances:

- Material delivery truck drivers while off "the site of the work"

- Truck Drivers traveling between a prevailing wage job and a commercial supply facility while they are off the "site of the work"

- Truck drivers whose time spent on the "site of the work" is de minimus, such as under 15 minutes at a time, merely to drop off materials or supplies, including asphalt.

These guidelines are similar to U.S. Labor Department policies. The application of these guidelines may be subject to review based on factual considerations on a case by case basis.

For example:

- Material men and deliverymen are not covered under prevailing wage as long as they are not directly involved in the construction process. If, they unload the material, they would then be covered by prevailing wage for the classification they are performing work in: laborer, equipment operator, etc.
- Hauling material off site is not covered provided they are not dumping it at a location outlined above.
- Driving a truck on site and moving equipment or materials on site would be considered covered work, as this is part of the construction process.

Any questions regarding the proper classification should be directed to:
Public Contract Compliance Unit
Wage and Workplace Standards Division
Connecticut Department of Labor
200 Folly Brook Blvd, Wethersfield, CT 06109
(860) 263-6543

Statute 31-55a

Last Updated: June 02, 2008

- Special Notice -

To All State and Political Subdivisions,Their Agents, and Contractors

Connecticut General Statute 31-55a - Annual adjustments to wage rates by contractors doing state work.

Each contractor that is awarded a contract on or after October 1, 2002, for (1) the construction of a state highway or bridge that falls under the provisions of section 31-54 of the general statutes, or (2) the construction, remodeling, refinishing, refurbishing, rehabilitation, alteration or repair of any public works project that falls under the provisions of section 31-53 of the general statutes shall contact the Labor Commissioner on or before July first of each year, for the duration of such contract, to ascertain the prevailing rate of wages on an hourly basis and the amount of payment or contributions paid or payable on behalf of each mechanic, laborer or worker employed upon the work contracted to be done, and shall make any necessary adjustments to such prevailing rate of wages and such payment or contributions paid or payable on behalf of each such employee, effective each July first.

- The prevailing wage rates applicable to any contract or subcontract awarded on or after October 1, 2002 are subject to annual adjustments each July 1st for the duration of any project which was originally advertised for bids on or after October 1, 2002.
- Each contractor affected by the above requirement shall pay the annual adjusted prevailing wage rate that is in effect each July 1st, as posted by the Department of Labor.
- It is the ***contractor's*** responsibility to obtain the annual adjusted prevailing wage rate increases directly from the Department of Labor's Web Site. The annual adjustments will be posted on the Department of Labor Web page: www.ctdol.state.ct.us. For those without internet access, please contact the division listed below.
- The Department of Labor will continue to issue the initial prevailing wage rate schedule to the Contracting Agency for the project. All subsequent annual adjustments will be posted on our Web Site for contractor access.

Any questions should be directed to the Contract Compliance Unit, Wage and Workplace

Standards Division, Connecticut Department of Labor, 200 Folly Brook Blvd., Wethersfield, CT 06109 at (860)263-6790.

Workplace Laws

Published by the Connecticut Department of Labor, Project Management Office

November 29, 2006

Notice

To All Mason Contractors and Interested Parties Regarding Construction Pursuant to Section 31-53 of the Connecticut General Statutes (Prevailing Wage)

The Connecticut Labor Department Wage and Workplace Standards Division is empowered to enforce the prevailing wage rates on projects covered by the above referenced statute.

Over the past few years the Division has withheld enforcement of the rate in effect for workers who operate a forklift on a prevailing wage rate project due to a potential jurisdictional dispute.

The rate listed in the schedules and in our Occupational Bulletin (see enclosed) has been as follows:

Forklift Operator:

- **Laborers (Group 4) Mason Tenders -** operates forklift solely to assist a mason to a maximum height of nine feet only.

- **Power Equipment Operator (Group 9) -** operates forklift to assist any trade and to assist a mason to a height over nine feet.

The U.S. Labor Department conducted a survey of rates in Connecticut but it has not been published and the rate in effect remains as outlined in the above Occupational Bulletin.

Since this is a classification matter and not one of jurisdiction, effective January 1, 2007 the Connecticut Labor Department will enforce the rate on each schedule in accordance with our statutory authority.

Your cooperation in filing appropriate and accurate certified payrolls is appreciated.

Informational Bulletin

THE 10-HOUR OSHA CONSTRUCTION SAFETY AND HEALTH COURSE

(applicable to public building contracts entered into *on or after July 1, 2007,* where the total cost of all work to be performed is at least $100,000)

(1) This requirement was created by Public Act No. 06-175, which is codified in Section 31-53b of the Connecticut General Statutes (pertaining to the prevailing wage statutes);

(2) The course is required for public building construction contracts (projects funded in whole or in part by the state or any political subdivision of the state) entered into on or after July 1, 2007;

(3) It is required of private employees (not state or municipal employees) and apprentices who perform manual labor for a general contractor or subcontractor on a public building project where the total cost of all work to be performed is at least $100,000;

(4) The ten-hour construction course pertains to the ten-hour Outreach Course conducted in accordance with federal OSHA Training Institute standards, and, for telecommunications workers, a ten-hour training course conducted in accordance with federal OSHA standard, 29 CFR 1910.268;

(5) The internet website for the federal OSHA Training Institute is http://www.osha.gov/fso/ote/training/edcenters/fact_sheet.html;

(6) The statutory language leaves it to the contractor and its employees to determine who pays for the cost of the ten-hour Outreach Course;

(7) Within 30 days of receiving a contract award, a general contractor must furnish proof to the Labor Commissioner that all employees and apprentices performing manual labor on the project will have completed such a course;

(8) Proof of completion may be demonstrated through either: (a) the presentation of a *bona fide* student course completion card issued by the federal OSHA Training Institute; *or* (2) the presentation of documentation provided to an employee by a trainer certified by the Institute pending the actual issuance of the completion card;

(9) Any card with an issuance date more than 5 years prior to the commencement date of the construction project shall not constitute proof of compliance;

(10) Each employer shall affix a copy of the construction safety course completion card to the certified payroll submitted to the contracting agency in accordance with Conn. Gen. Stat. § 31-53(f) on which such employee's name first appears;

(11) Any employee found to be in non-compliance shall be subject to removal from the worksite if such employee does not provide satisfactory proof of course completion to the Labor Commissioner by the fifteenth day after the date the employee is determined to be in noncompliance;

(12) Any such employee who is determined to be in noncompliance may continue to work on a public building construction project for a maximum of fourteen consecutive calendar days while bringing his or her status into compliance;

(13) The Labor Commissioner may make complaint to the prosecuting authorities regarding any employer or agent of the employer, or officer or agent of the corporation who files a false certified payroll with respect to the status of an employee who is performing manual labor on a public building construction project;

(14) The statute provides the minimum standards required for the completion of a safety course by manual laborers on public construction contracts; any contractor can exceed these minimum requirements; and

(15) Regulations clarifying the statute are currently in the regulatory process, and shall be posted on the CTDOL website as soon as they are adopted in final form.

(16) Any questions regarding this statute may be directed to the Wage and Workplace Standards Division of the Connecticut Labor Department via the internet website of http://www.ctdol.state.ct.us/wgwkstnd/wgemenu.htm; or by telephone at (860)263-6790.

THE ABOVE INFORMATION IS PROVIDED EXCLUSIVELY AS AN EDUCATIONAL RESOURCE, AND IS NOT INTENDED AS A SUBSTITUTE FOR LEGAL INTERPRETATIONS WHICH MAY ULTMATELY ARISE CONCERNIG THE CONSTRUCTION OF THE STATUTE OR THE REGULATIONS.

Sec. 31-53b. **Construction safety and health course**. **Proof of completion required for employees on public building projects. Enforcement. Regulations**. (a) Each contract entered into on or after July 1, 2007, for the construction, remodeling, refinishing, refurbishing, rehabilitation, alteration or repair of any public building project by the state or any of its agents, or by an political subdivision of the state or any of its agents, where the total cost of all work to be performed by all contractors and subcontractors in connection with the contract is at least one hundred thousand dollars, shall contain a provision requiring that, not later than thirty days after the date such contract is awarded, each contractor furnish proof to the Labor Commissioner that all employees performing manual labor on or in such public building, pursuant to such contract, have completed a course of at least ten hours in duration in construction safety and health approved by the federal Occupational Safety and Health Administration or, in the case of telecommunications employees, have completed at least ten hours of training in accordance with 29 CFR 1910.268.

(b) Any employee required to complete a construction safety and health course required under subsection (a) of this section who has not completed the course shall be subject to removal from the worksite if the employee does not provide documentation of having completed such course by the fifteenth day after the date the employee is found to be in noncompliance. The Labor Commissioner or said commissioner's designee shall enforce this section.

(c) Not later than January 1, 2007, the Labor Commissioner shall adopt regulations, in accordance with the provisions of chapter 54, to implement the provisions of subsections (a) and (b) of this section. Such regulations shall require that the ten-hour construction safety and health courses required under subsection (a) of this section be conducted in accordance with federal Occupational Safety and Health Administration Training Institute standards, or in accordance with 29 CFR 1910.268, as appropriate. The Labor Commissioner shall accept as sufficient proof of compliance with the provisions of subsection (a) or (b) of this section a student course completion card issued by the federal Occupational Safety and Health Administration Training Institute, or such other proof of compliance said commissioner deems appropriate, dated no earlier than five years before the commencement date of such public works project.

(d) For the purposes of this section, "public building" means a structure, paid for in whole or in part with state funds, within a roof and within exterior walls or fire walls, designed for the housing, shelter, enclosure and support or employment of people, animals or property of any kind, including, but not limited to, sewage treatment plants and water treatment plants, "Public building" does not include site work, roads or bridges, rail lines, parking lots or underground water, sewer or drainage systems including pump houses or other utility systems.

CONNECTICUT DEPARTMENT OF LABOR
WAGE AND WORKPLACE STANDARDS DIVISION

CONTRACTORS WAGE CERTIFICATION FORM

I,_____of _____
Officer, Owner, Authorized Rep. Company Name

do hereby certify that the _____
Company Name

_____
Street

_____
City

and all of its subcontractors will pay all workers on the

_____
Project Name and Number

_____
Street and City

the wages as listed in the schedule of prevailing rates required for such project (a copy of which is attached hereto).

_____
Signed

Subscribed and sworn to before me this _____ day of _____,

_____
Notary Public

☞ Return to:

Connecticut Department of Labor
Wage & Workplace Standards Division
200 Folly Brook Blvd.
Wethersfield, CT 06109