CONTRACT BIDDING DOCUMENTS

FOR

DECK RENOVATION AND EXPANSION OF ROCKLEDGE CLUBHOUSE AT ROCKLEDGE COUNTRY CLUB

BID # 6543F

TOWN OF WEST HARTFORD

INFORMATION

DECK RENOVATION AND EXPANSION OF ROCKLEDGE CLUBHOUSE
AT ROCKLEDGE COUNTRY CLUB
289 SOUTH MAIN STREET
WEST HARTFORD, CT 06107
BID#6543F

ARCHITECT

BOSTWICK ARCHITECTS, LLC
56 ARBOR STREET
HARTFORD, CT 06106

PROJECT MANAGER

WILLIAM S. PHIBBS
CAPITAL PROJECTS MANAGER

ALL QUESTIONS TO

PURCHASING SERVICES
TAMMY BRADLEY
SENIOR BUYER

All questions must be submitted in writing and mailed to the Purchasing Office emailed to Tammyb@westhartfordCT.gov or faxed to 860-561-7507 at least seven calendar days prior to the date established for the opening of bids. Please do not call the Engineer/ Architect, Project Manager or Purchasing Office with questions.

INSTRUCTIONS TO BIDDERS
00101 PROJECT INFORMATION PAGE
00102 TABLE OF CONTENTS
00103 PROJECT NARRATIVE
00104 LIST OF DRAWINGS
00105 LOCATION MAP
00106 WORK RULES
00107 NOISE ORDINANCE
BIDDING REQUIREMENTS AND FORMS
00201 INVITATION TO BID
00202 INSTRUCTIONS TO BIDDERS - AIA DOCUMENT A-701 - 1997
00203 SUPPLEMENTARY INSTRUCTIONS TO BIDDERS
00204 BID FORMS
00205 SAMPLE AGREEMENT FORM
LABOR REQUIREMENTS
00303 CONTRACT LABOR RATES
GENERAL CONDITIONS
00401 GENERAL CONDITIONS - AIA DOCUMENT A-201
00402 SUPPLEMENTARY GENERAL CONDITIONS

DIVISION 1	**GENERAL REQUIREMENTS**
Section 01000	SPECIFICATION FORMAT
Section 01010	SUMMARY OF WORK
Section 01019	CONTRACT CONSIDERATIONS
Section 01026	APPLICATION FOR PAYMENT
Section 01039	COORDINATION AND MEETINGS
Section 01045	CUTTING AND PATCHING
Section 01060	REGULATORY REQUIREMENTS
Section 01090	REFERENCES
Section 01120	ALTERNATE PROJECT PROCEDURES
Section 01200	PROJECT MEETINGS
Section 01300	SUBMITTALS
Section 01340	SHOP DRAWINGS AND SAMPLES
Section 01400	QUALITY CONTROL
Section 01410	SPECIAL INSPECTIONS AND STRUCTURAL TESTING
Section 01500	CONSTRUCTION FACILITIES AND TEMPORARY CONTROLS
Section 01600	MATERIALS AND EQUIPMENT
Section 01630	PRODUCT OPTIONS AND SUBSTITUTIONS
Section 01700	CONTRACT CLOSEOUT
Section 01720	PROJECT RECORD
Section 01730	HVAC OPERATION TRAINING MANUAL
Section 01740	GUARANTEES, WARRANTIES, BONDS & MAINTENANCE CONTRACTS
Section 01800	GENERAL STANDARDS

DIVISION 2	**SITEWORK – ON DRAWINGS**
DIVISION 3	**CONCRETE**
Section 03300	CAST-IN-PLACE CONCRETE
DIVISION 4	**MASONRY – NOT USED**
DIVISION 5	**METAL – ALSO ON DRAWINGS**
Section 05740	RAILING SYSTEM – INSTALLATION GUIDE
DIVISION 6	**WOOD AND PLASTIC**
Section 06100	ROUGH CARPENTRY
Section 06200	FINISH CARPENTRY
DIVISION 7	**THERMAL AND MOISTURE PROTECTION**
Section 07270	FIRESTOPPING
Section 07311	FIBERGLASS SHINGLES
Section 07620	SHEET METAL AND FLASHING TRIM
Section 07920	JOINT SEALERS
DIVISION 8	**DOORS AND WINDOWS – NOT USED**
DIVISION 9	**FINISHES**
Section 09705	POURED EPOXY FLOOR SYSTEM - ACCELERA HC SYSTEM
Section 09900	PAINTING
DIVISION 10	**SPECIALTIES – NOT USED**
DIVISION 11	**EQUIPMENT– NOT USED**
DIVISION 12	**FURNISHING – NOT USED**
DIVISION 13	**SPECIAL CONSTRUCTION – NOT USED**
DIVISION 14	**CONVEYING SYSTEMS – NOT USED**
DIVISION 15	**MECHANICAL – NOT USED**
DIVISION 16	**ELECTRICAL – ON DRAWINGS**

PROJECT NARRATIVE

Demolition of existing West side upper floor exterior dining deck section, railings, posts and awning system.

Installation of new deck framing, flooring, wire railing and railing post system with LED lighting.

Removal of existing exterior Dining Bar building wing awning and awning support system and replace with new.

Removal of existing exterior under deck lighting fixtures and replacement with new. Installation of new railing system lighting and associated electrical power wiring.

LIST OF DRAWINGS

COVER SHEET

CIVIL

1 OF 2	TOPOGRAPHIC SURVEY SHOWING EXISTING CONDITIONS
2 OF 2	SITE GRADING & UTILITIES PLAN

ARCHITECTURAL

AI - 0.1	INFORMATION SHEET, MOUNTING HEIGHTS, SYMBOLS. DRAWING LIST
AC - 1.0	CODE INFORMATION
AD - 1.0	DEMOLITION FLOOR PLAN AND AWNING ROOF PLAN
AD - 2.0	DEMOLITION EXTERIOR ELEVATIONS
A - 1.0	UPPER AND LOWER LEVEL FLOOR PLANS
A - 2.0	EXTERIOR ELEVATIONS AND DETAILS

STRUCTURAL

S – 1.0	DECK FRAMING PLAN, DETAILS AND GENERAL NOTES
S – 2.0	DECK RAILING PLAN AND DETAILS

FIRE PROTECTION

NOT APPLICABLE

PLUMBING

NOT APPLICABLE

MECHANICAL

NOT APPLICABLE

ELECTRICAL

E - 1.0	ELECTRICAL PLANS
E - 2.0	ELECTRICAL SPECIFICATIONS

289 South Main Street Rockledge Country Club

TOWN OF WEST HARTFORD

MAP FOR REFERENCE ONLY
NOT A LEGAL DOCUMENT

Town of West Hartford, CT makes no claims and no warranties, expressed or implied, concerning the validity or accuracy of the GIS data presented on this map.

Parcels updated 5/22/2015
Properties updated Daily

General

1. Contractor, supervisory, and trades personnel will be required to be familiar with and adhere to the Project work rules. Failure to comply with these Work Rules may result in being banned from the project site.
2. The Contractor shall take direction only from the Capital Projects Manager or their representative.
3. All construction activities that are disruptive to school operations (due to noise, vibration, dust, odors, etc.) shall occur outside regular school instructional hours.
4. Contractors shall not use Town-owned dumpsters for refuse disposal unless given prior written permission from the Town's capital projects manager.
5. No entry into the building is allowed without prior permission of the Town. When entry is granted each individual must sign in at the main office and obtain a visitor's badge.
6. Have staff available on site to receive and unload your materials whenever deliveries are made. If Contractor staff is not available the delivery will be refused.
7. The Contractor shall maintain, at the site, one copy of the drawings, specifications, addenda, change orders and other modifications, in good order and marked currently; and one copy of approved shop drawings, product data, samples and similar required submittals.
8. Maintain complete files of Material Safety Data Sheets (MSDS) on the jobsite.
9. The Owner does not provide secure storage for the Contractor's materials and tools.

Foreman/Supervisory Personnel

1. The Trade Foreman/Superintendent must be on the jobsite whenever their staff is on site. This includes subcontractor personnel.

All Contractor Personnel

1. Contractors, subcontractors, and all their personnel shall wear a uniform with the company's logo while on site.
2. For individuals working in school buildings or on school sites, the Contractor must conduct a criminal background check. Prior to working in any school building, the Contractor shall provide verification that their employees and subcontractors do not appear on any Sex Offender Registry.
3. Job hours are 7:00 AM to 3:30 PM for first shift and 3:30 PM to 11:00 PM for second shift. Additional time may be subject to custodial overtime charges of approximately $40.00 per hour.
4. Material deliveries or movement of construction vehicles is not permitted among buses and students during student drop-off of pick-up times. 8:00-8:45 AM & 3:15-3:45 PM Monday, Tuesday, Thursday, Friday and 1:45 PM-2:15 PM on Wednesday. Times vary among elementary, middle and high schools are will be confirmed with the Contractor.
5. No alcohol or controlled substances are allowed on the school property.
6. No smoking is allowed within the building or on the school property.
7. No food is to be eaten in the building. All food-related trash is to be removed from the site at the end of each day.
8. Use of radios and other amplified sound systems is disruptive to building occupants and is not permitted during classroom instructional hours.
9. Clean up all work areas daily. Keep the job clean and debris free.
10. Coordinate your work with the work of other trades. Check preceding work prior to starting new work. Do not proceed unless preceding work is completely acceptable.
11. Protect your work at all times from damage.
12. Park in designated areas only. Keep parking areas accessible for emergency vehicles. Privately owned vehicles are not permitted in areas of construction.
13. Passenger elevators are not to be used by Contractors for transporting materials.

You created this PDF from an application that is not licensed to print to novaPDF printer (http://www.novapdf.com)

Safety

1. All work activities are to be planned with Safety as the #1 priority.
2. A copy of the Contractor's safety program shall be present at job site.
3. A first aid kit appropriate to the size of the work crew is to be provided by the Contractor.
4. Appropriate fire extinguishing supplied by the Contractor shall be present at the work area.
5. All personnel in work areas will have, at a minimum, hard hats, safety glasses, work shoes, shirts with sleeves, and long pants. Hard hats have to have company and employees name.
6. No interruption of building services (e.g. power, water, fire alarm intercom, ventilation, heating, cooling, etc.) without prior coordination with, and permission from, the Owner.
7. No use of any tools, equipment or supplies, other than those supplied by the Contractor.

You created this PDF from an application that is not licensed to print to novaPDF printer (http://www.novapdf.com)

L. Noise created as a result of or relating to an emergency.

M. Noise generated by construction activity shall be exempted between the hours of 7:00 a.m. to one hour after sundown, Monday through Saturday.

N. Noise created by blasting other than that conducted in connection with construction activities shall be exempted, provided that the blasting is conducted between 8:00 a.m. and 5:00 p.m. local time at specified hours previously announced to the local public or provided that a permit for such blasting has been obtained from local authorities.

O. Noise created by on-site recreational or sporting activity which is sanctioned by the state or local government, provided that noise discharged from exhausts is adequately muffled to prevent loud and/or explosive noises therefrom.

P. Patriotic or public celebrations not extending longer than one calendar day.

Q. Noise created by aircraft.

R. Noise created by products undergoing test, where one of the primary purposes of the test is the evaluation of product noise characteristics and where practical noise control measures have been taken.

S. Noise generated by transmission facilities, distribution facilities and substations of public utilities providing electrical powers, telephone, cable television or other similar services and located on property which is not owned by the public utility and which may or may not be within utility easements.

INVITATION TO BID

Sealed bids marked "**DECK RENOVATION AND EXPANSION OF ROCKLEDGE CLUBHOUSE AT ROCKLEDGE COUNTRY CLUB BID#6543F**" will be received at the office of the Purchasing Division, Room 223, Town Hall, 50 South Main Street, West Hartford, Connecticut until **2:00 PM** on **December 1, 2016** at which time they will be publicly opened and read.

Plans and specifications are available for downloading at www.westhartfordct.gov/bids. Any questions concerning this request for bid shall be addressed to the Purchasing Agent at the address above.

A pre-bid conference will be held on **November 15, 2016** at **10:00 AM** at 289 South Main Street, West Hartford at which time questions concerning the project will be answered. Prospective bidders are expected to attend the pre-bid meeting as this will be the only opportunity to verbalize questions relative to this project and view the job site with the Town's project team.

All Bidders must file with their bid a bid bond, certified or treasurer's check in the amount of 10% of the total of the base bid made payable to the Town of West Hartford.

Performance and Labor and Material Payment bonds in the amount of 100% of the contract price will be required of the successful bidder if the contract pursuant to this request for bids exceeds $50,000.00.

No bid may be withdrawn for a period of ninety (90) days after the opening of bids without the approval and written consent of the Town of West Hartford.

The right is reserved to reject any and all bids, to waive any informalities in the bidding and to make awards in any manner that is the most beneficial to the Town.

Bidders are encouraged to attend the Town's bid opening at which time the public is afforded an opportunity to record bid prices received in response to the Town's solicitation. Bidders who would like the results of the bid but are unable to attend the bid opening, may check the Town website, www.westhartfordct.gov/gov/departments/purchasing/bid_results a week after the bid opening date. Bidders calling the Purchasing Office for bid results will be referred to the above procedure.

TOWN OF WEST HARTFORD
PETER PRIVITERA
PURCHASING AGENT

AIA® Document A701™ – 1997

Instructions to Bidders

for the following PROJECT:
(Name and location or address)
DECK RENOVATION AND EXPANSION OF ROCKLEDGE CLUBHOUSE BID
6543F
289 SOUTH MAIN STREET
WEST HARTFORD, CT 06110

THE OWNER:
(Name, legal status and address)
TOWN OF WEST HARTFORD
50 SOUTH MAIN STREET
WEST HARTFORD, CT 06107

THE ARCHITECT:
(Name, legal status and address)
BOSTWICK ARCHITECTS LLC
56 ARBOR STREET
HARTFORD, CT 06106

ADDITIONS AND DELETIONS:
The author of this document has added information needed for its completion. The author may also have revised the text of the original AIA standard form. An *Additions and Deletions Report* that notes added information as well as revisions to the standard form text is available from the author and should be reviewed. A vertical line in the left margin of this document indicates where the author has added necessary information and where the author has added to or deleted from the original AIA text.

This document has important legal consequences. Consultation with an attorney is encouraged with respect to its completion or modification.

TABLE OF ARTICLES

1 DEFINITIONS

2 BIDDER'S REPRESENTATIONS

3 BIDDING DOCUMENTS

4 BIDDING PROCEDURES

5 CONSIDERATION OF BIDS

6 POST-BID INFORMATION

7 PERFORMANCE BOND AND PAYMENT BOND

8 FORM OF AGREEMENT BETWEEN OWNER AND CONTRACTOR

AIA Document A701™ – 1997. Copyright © 1970, 1974, 1978, 1987 and 1997 by The American Institute of Architects. All rights reserved. WARNING: This AIA® Document is protected by U.S. Copyright Law and International Treaties. Unauthorized reproduction or distribution of this AIA® Document, or any portion of it, may result in severe civil and criminal penalties, and will be prosecuted to the maximum extent possible under the law. This document was produced by AIA software at 16:01:11 on 10/27/2016 under Order No.6372817173_1 which expires on 10/15/2017, and is not for resale.
User Notes:
(830033254)

ARTICLE 1 DEFINITIONS

§ 1.1 Bidding Documents include the Bidding Requirements and the proposed Contract Documents. The Bidding Requirements consist of the Advertisement or Invitation to Bid, Instructions to Bidders, Supplementary Instructions to Bidders, the bid form, and other sample bidding and contract forms. The proposed Contract Documents consist of the form of Agreement between the Owner and Contractor, Conditions of the Contract (General, Supplementary and other Conditions), Drawings, Specifications and all Addenda issued prior to execution of the Contract.

§ 1.2 Definitions set forth in the General Conditions of the Contract for Construction, AIA Document A201, or in other Contract Documents are applicable to the Bidding Documents.

§ 1.3 Addenda are written or graphic instruments issued by the Architect prior to the execution of the Contract which modify or interpret the Bidding Documents by additions, deletions, clarifications or corrections.

§ 1.4 A Bid is a complete and properly executed proposal to do the Work for the sums stipulated therein, submitted in accordance with the Bidding Documents.

§ 1.5 The Base Bid is the sum stated in the Bid for which the Bidder offers to perform the Work described in the Bidding Documents as the base, to which Work may be added or from which Work may be deleted for sums stated in Alternate Bids.

§ 1.6 An Alternate Bid (or Alternate) is an amount stated in the Bid to be added to or deducted from the amount of the Base Bid if the corresponding change in the Work, as described in the Bidding Documents, is accepted.

§ 1.7 A Unit Price is an amount stated in the Bid as a price per unit of measurement for materials, equipment or services or a portion of the Work as described in the Bidding Documents.

§ 1.8 A Bidder is a person or entity who submits a Bid and who meets the requirements set forth in the Bidding Documents.

§ 1.9 A Sub-bidder is a person or entity who submits a bid to a Bidder for materials, equipment or labor for a portion of the Work.

ARTICLE 2 BIDDER'S REPRESENTATIONS

§ 2.1 The Bidder by making a Bid represents that:

§ 2.1.1 The Bidder has read and understands the Bidding Documents or Contract Documents, to the extent that such documentation relates to the Work for which the Bid is submitted, and for other portions of the Project, if any, being bid concurrently or presently under construction.

§ 2.1.2 The Bid is made in compliance with the Bidding Documents.

§ 2.1.3 The Bidder has visited the site, become familiar with local conditions under which the Work is to be performed and has correlated the Bidder's personal observations with the requirements of the proposed Contract Documents.

§ 2.1.4 The Bid is based upon the materials, equipment and systems required by the Bidding Documents without exception.

ARTICLE 3 BIDDING DOCUMENTS

§ 3.1 COPIES

§ 3.1.1 Bidders may obtain complete sets of the Bidding Documents from the issuing office designated in the Advertisement or Invitation to Bid in the number and for the deposit sum, if any, stated therein. The deposit will be refunded to Bidders who submit a bona fide Bid and return the Bidding Documents in good condition within ten days after receipt of Bids. The cost of replacement of missing or damaged documents will be deducted from the deposit. A Bidder receiving a Contract award may retain the Bidding Documents and the Bidder's deposit will be refunded.

AIA Document A701™ – 1997. Copyright © 1970, 1974, 1978, 1987 and 1997 by The American Institute of Architects. All rights reserved. WARNING: This AIA® Document is protected by U.S. Copyright Law and International Treaties. Unauthorized reproduction or distribution of this AIA® Document, or any portion of it, may result in severe civil and criminal penalties, and will be prosecuted to the maximum extent possible under the law. This document was produced by AIA software at 16:01:11 on 10/27/2016 under Order No.6372817173_1 which expires on 10/15/2017, and is not for resale.
User Notes: (830033254)

§ 3.1.2 Bidding Documents will not be issued directly to Sub-bidders unless specifically offered in the Advertisement or Invitation to Bid, or in supplementary instructions to bidders.

§ 3.1.3 Bidders shall use complete sets of Bidding Documents in preparing Bids; neither the Owner nor Architect assumes responsibility for errors or misinterpretations resulting from the use of incomplete sets of Bidding Documents.

§ 3.1.4 The Owner and Architect may make copies of the Bidding Documents available on the above terms for the purpose of obtaining Bids on the Work. No license or grant of use is conferred by issuance of copies of the Bidding Documents.

§ 3.2 INTERPRETATION OR CORRECTION OF BIDDING DOCUMENTS

§ 3.2.1 The Bidder shall carefully study and compare the Bidding Documents with each other, and with other work being bid concurrently or presently under construction to the extent that it relates to the Work for which the Bid is submitted, shall examine the site and local conditions, and shall at once report to the Architect errors, inconsistencies or ambiguities discovered.

§ 3.2.2 Bidders and Sub-bidders requiring clarification or interpretation of the Bidding Documents shall make a written request which shall reach the Architect at least seven days prior to the date for receipt of Bids.

§ 3.2.3 Interpretations, corrections and changes of the Bidding Documents will be made by Addendum. Interpretations, corrections and changes of the Bidding Documents made in any other manner will not be binding, and Bidders shall not rely upon them.

§ 3.3 SUBSTITUTIONS

§ 3.3.1 The materials, products and equipment described in the Bidding Documents establish a standard of required function, dimension, appearance and quality to be met by any proposed substitution.

§ 3.3.2 No substitution will be considered prior to receipt of Bids unless written request for approval has been received by the Architect at least ten days prior to the date for receipt of Bids. Such requests shall include the name of the material or equipment for which it is to be substituted and a complete description of the proposed substitution including drawings, performance and test data, and other information necessary for an evaluation. A statement setting forth changes in other materials, equipment or other portions of the Work, including changes in the work of other contracts that incorporation of the proposed substitution would require, shall be included. The burden of proof of the merit of the proposed substitution is upon the proposer. The Architect's decision of approval or disapproval of a proposed substitution shall be final.

§ 3.3.3 If the Architect approves a proposed substitution prior to receipt of Bids, such approval will be set forth in an Addendum. Bidders shall not rely upon approvals made in any other manner.

§ 3.3.4 No substitutions will be considered after the Contract award unless specifically provided for in the Contract Documents.

§ 3.4 ADDENDA

§ 3.4.1 Addenda will be transmitted to all who are known by the issuing office to have received a complete set of Bidding Documents.

§ 3.4.2 Copies of Addenda will be made available for inspection wherever Bidding Documents are on file for that purpose.

§ 3.4.3 Addenda will be issued no later than four days prior to the date for receipt of Bids except an Addendum withdrawing the request for Bids or one which includes postponement of the date for receipt of Bids.

§ 3.4.4 Each Bidder shall ascertain prior to submitting a Bid that the Bidder has received all Addenda issued, and the Bidder shall acknowledge their receipt in the Bid.

AIA Document A701™ – 1997. Copyright © 1970, 1974, 1978, 1987 and 1997 by The American Institute of Architects. All rights reserved. WARNING: This AIA® Document is protected by U.S. Copyright Law and International Treaties. Unauthorized reproduction or distribution of this AIA® Document, or any portion of it, may result in severe civil and criminal penalties, and will be prosecuted to the maximum extent possible under the law. This document was produced by AIA software at 16:01:11 on 10/27/2016 under Order No.6372817173_1 which expires on 10/15/2017, and is not for resale.
User Notes:
(830033254)

ARTICLE 4 BIDDING PROCEDURES

§ 4.1 PREPARATION OF BIDS

§ 4.1.1 Bids shall be submitted on the forms included with the Bidding Documents.

§ 4.1.2 All blanks on the bid form shall be legibly executed in a non-erasable medium.

§ 4.1.3 Sums shall be expressed in both words and figures. In case of discrepancy, the amount written in words shall govern.

§ 4.1.4 Interlineations, alterations and erasures must be initialed by the signer of the Bid.

§ 4.1.5 All requested Alternates shall be bid. If no change in the Base Bid is required, enter "No Change."

§ 4.1.6 Where two or more Bids for designated portions of the Work have been requested, the Bidder may, without forfeiture of the bid security, state the Bidder's refusal to accept award of less than the combination of Bids stipulated by the Bidder. The Bidder shall make no additional stipulations on the bid form nor qualify the Bid in any other manner.

§ 4.1.7 Each copy of the Bid shall state the legal name of the Bidder and the nature of legal form of the Bidder. The Bidder shall provide evidence of legal authority to perform within the jurisdiction of the Work. Each copy shall be signed by the person or persons legally authorized to bind the Bidder to a contract. A Bid by a corporation shall further give the state of incorporation and have the corporate seal affixed. A Bid submitted by an agent shall have a current power of attorney attached certifying the agent's authority to bind the Bidder.

§ 4.2 BID SECURITY

§ 4.2.1 Each Bid shall be accompanied by a bid security in the form and amount required if so stipulated in the Instructions to Bidders. The Bidder pledges to enter into a Contract with the Owner on the terms stated in the Bid and will, if required, furnish bonds covering the faithful performance of the Contract and payment of all obligations arising thereunder. Should the Bidder refuse to enter into such Contract or fail to furnish such bonds if required, the amount of the bid security shall be forfeited to the Owner as liquidated damages, not as a penalty. The amount of the bid security shall not be forfeited to the Owner in the event the Owner fails to comply with Section 6.2.

§ 4.2.2 If a surety bond is required, it shall be written on AIA Document A310, Bid Bond, unless otherwise provided in the Bidding Documents, and the attorney-in-fact who executes the bond on behalf of the surety shall affix to the bond a certified and current copy of the power of attorney.

§ 4.2.3 The Owner will have the right to retain the bid security of Bidders to whom an award is being considered until either (a) the Contract has been executed and bonds, if required, have been furnished, or (b) the specified time has elapsed so that Bids may be withdrawn or (c) all Bids have been rejected.

§ 4.3 SUBMISSION OF BIDS

§ 4.3.1 All copies of the Bid, the bid security, if any, and any other documents required to be submitted with the Bid shall be enclosed in a sealed opaque envelope. The envelope shall be addressed to the party receiving the Bids and shall be identified with the Project name, the Bidder's name and address and, if applicable, the designated portion of the Work for which the Bid is submitted. If the Bid is sent by mail, the sealed envelope shall be enclosed in a separate mailing envelope with the notation "SEALED BID ENCLOSED" on the face thereof.

§ 4.3.2 Bids shall be deposited at the designated location prior to the time and date for receipt of Bids. Bids received after the time and date for receipt of Bids will be returned unopened.

§ 4.3.3 The Bidder shall assume full responsibility for timely delivery at the location designated for receipt of Bids.

§ 4.3.4 Oral, telephonic, telegraphic, facsimile or other electronically transmitted bids will not be considered.

§ 4.4 MODIFICATION OR WITHDRAWAL OF BID

§ 4.4.1 A Bid may not be modified, withdrawn or canceled by the Bidder during the stipulated time period following the time and date designated for the receipt of Bids, and each Bidder so agrees in submitting a Bid.

AIA Document A701™ – 1997. Copyright © 1970, 1974, 1978, 1987 and 1997 by The American Institute of Architects. All rights reserved. WARNING: This AIA® Document is protected by U.S. Copyright Law and International Treaties. Unauthorized reproduction or distribution of this AIA® Document, or any portion of it, may result in severe civil and criminal penalties, and will be prosecuted to the maximum extent possible under the law. This document was produced by AIA software at 16:01:11 on 10/27/2016 under Order No.6372817173_1 which expires on 10/15/2017, and is not for resale
User Notes:
(830033254)

§ 4.4.2 Prior to the time and date designated for receipt of Bids, a Bid submitted may be modified or withdrawn by notice to the party receiving Bids at the place designated for receipt of Bids. Such notice shall be in writing over the signature of the Bidder. Written confirmation over the signature of the Bidder shall be received, and date- and time-stamped by the receiving party on or before the date and time set for receipt of Bids. A change shall be so worded as not to reveal the amount of the original Bid.

§ 4.4.3 Withdrawn Bids may be resubmitted up to the date and time designated for the receipt of Bids provided that they are then fully in conformance with these Instructions to Bidders.

§ 4.4.4 Bid security, if required, shall be in an amount sufficient for the Bid as resubmitted.

ARTICLE 5 CONSIDERATION OF BIDS

§ 5.1 OPENING OF BIDS

At the discretion of the Owner, if stipulated in the Advertisement or Invitation to Bid, the properly identified Bids received on time will be publicly opened and will be read aloud. An abstract of the Bids may be made available to Bidders.

§ 5.2 REJECTION OF BIDS

The Owner shall have the right to reject any or all Bids. A Bid not accompanied by a required bid security or by other data required by the Bidding Documents, or a Bid which is in any way incomplete or irregular is subject to rejection.

§ 5.3 ACCEPTANCE OF BID (AWARD)

§ 5.3.1 It is the intent of the Owner to award a Contract to the lowest qualified Bidder provided the Bid has been submitted in accordance with the requirements of the Bidding Documents and does not exceed the funds available. The Owner shall have the right to waive informalities and irregularities in a Bid received and to accept the Bid which, in the Owner's judgment, is in the Owner's own best interests.

§ 5.3.2 The Owner shall have the right to accept Alternates in any order or combination, unless otherwise specifically provided in the Bidding Documents, and to determine the low Bidder on the basis of the sum of the Base Bid and Alternates accepted.

ARTICLE 6 POST-BID INFORMATION

§ 6.1 CONTRACTOR'S QUALIFICATION STATEMENT

Bidders to whom award of a Contract is under consideration shall submit to the Architect, upon request, a properly executed AIA Document A305, Contractor's Qualification Statement, unless such a Statement has been previously required and submitted as a prerequisite to the issuance of Bidding Documents.

§ 6.2 OWNER'S FINANCIAL CAPABILITY

The Owner shall, at the request of the Bidder to whom award of a Contract is under consideration and no later than seven days prior to the expiration of the time for withdrawal of Bids, furnish to the Bidder reasonable evidence that financial arrangements have been made to fulfill the Owner's obligations under the Contract. Unless such reasonable evidence is furnished, the Bidder will not be required to execute the Agreement between the Owner and Contractor.

§ 6.3 SUBMITTALS

§ 6.3.1 The Bidder shall, as soon as practicable or as stipulated in the Bidding Documents, after notification of selection for the award of a Contract, furnish to the Owner through the Architect in writing:

- .1 a designation of the Work to be performed with the Bidder's own forces;
- .2 names of the manufacturers, products, and the suppliers of principal items or systems of materials and equipment proposed for the Work; and
- .3 names of persons or entities (including those who are to furnish materials or equipment fabricated to a special design) proposed for the principal portions of the Work.

§ 6.3.2 The Bidder will be required to establish to the satisfaction of the Architect and Owner the reliability and responsibility of the persons or entities proposed to furnish and perform the Work described in the Bidding Documents.

AIA Document A701™ – 1997. Copyright © 1970, 1974, 1978, 1987 and 1997 by The American Institute of Architects. All rights reserved. WARNING: This AIA® Document is protected by U.S. Copyright Law and International Treaties. Unauthorized reproduction or distribution of this AIA® Document, or any portion of it, may result in severe civil and criminal penalties, and will be prosecuted to the maximum extent possible under the law. This document was produced by AIA software at 16:01:11 on 10/27/2016 under Order No.6372817173_1 which expires on 10/15/2017, and is not for resale.
User Notes:
(830033254)

§ 6.3.3 Prior to the execution of the Contract, the Architect will notify the Bidder in writing if either the Owner or Architect, after due investigation, has reasonable objection to a person or entity proposed by the Bidder. If the Owner or Architect has reasonable objection to a proposed person or entity, the Bidder may, at the Bidder's option, (1) withdraw the Bid or (2) submit an acceptable substitute person or entity with an adjustment in the Base Bid or Alternate Bid to cover the difference in cost occasioned by such substitution. The Owner may accept the adjusted bid price or disqualify the Bidder. In the event of either withdrawal or disqualification, bid security will not be forfeited.

§ 6.3.4 Persons and entities proposed by the Bidder and to whom the Owner and Architect have made no reasonable objection must be used on the Work for which they were proposed and shall not be changed except with the written consent of the Owner and Architect.

ARTICLE 7 PERFORMANCE BOND AND PAYMENT BOND

§ 7.1 BOND REQUIREMENTS

§ 7.1.1 If stipulated in the Bidding Documents, the Bidder shall furnish bonds covering the faithful performance of the Contract and payment of all obligations arising thereunder. Bonds may be secured through the Bidder's usual sources.

§ 7.1.2 If the furnishing of such bonds is stipulated in the Bidding Documents, the cost shall be included in the Bid. If the furnishing of such bonds is required after receipt of bids and before execution of the Contract, the cost of such bonds shall be added to the Bid in determining the Contract Sum.

§ 7.1.3 If the Owner requires that bonds be secured from other than the Bidder's usual sources, changes in cost will be adjusted as provided in the Contract Documents.

§ 7.2 TIME OF DELIVERY AND FORM OF BONDS

§ 7.2.1 The Bidder shall deliver the required bonds to the Owner not later than three days following the date of execution of the Contract. If the Work is to be commenced prior thereto in response to a letter of intent, the Bidder shall, prior to commencement of the Work, submit evidence satisfactory to the Owner that such bonds will be furnished and delivered in accordance with this Section 7.2.1.

§ 7.2.2 Unless otherwise provided, the bonds shall be written on AIA Document A312, Performance Bond and Payment Bond. Both bonds shall be written in the amount of the Contract Sum.

§ 7.2.3 The bonds shall be dated on or after the date of the Contract.

§ 7.2.4 The Bidder shall require the attorney-in-fact who executes the required bonds on behalf of the surety to affix thereto a certified and current copy of the power of attorney.

ARTICLE 8 FORM OF AGREEMENT BETWEEN OWNER AND CONTRACTOR

Unless otherwise required in the Bidding Documents, the Agreement for the Work will be written on AIA Document A101, Standard Form of Agreement Between Owner and Contractor Where the Basis of Payment Is a Stipulated Sum.

AIA Document A701™ – 1997. Copyright © 1970, 1974, 1978, 1987 and 1997 by The American Institute of Architects. All rights reserved. WARNING: This AIA® Document is protected by U.S. Copyright Law and International Treaties. Unauthorized reproduction or distribution of this AIA® Document, or any portion of it, may result in severe civil and criminal penalties, and will be prosecuted to the maximum extent possible under the law. This document was produced by AIA software at 16:01:11 on 10/27/2016 under Order No.6372817173_1 which expires on 10/15/2017, and is not for resale.
User Notes:
(830033254)

INSTRUCTIONS TO BIDDERS

AIA Document A701, "Instructions to Bidders", 1997 Edition, American Institute of Architects, Articles 1 through 8, are bound herein and are hereby made a part of the Contract Documents, and shall apply to all Contractors and Subcontractors.

SUPPLEMENTARY INSTRUCTIONS TO BIDDERS

Certain Articles of the AIA Instructions to Bidders are revised or replaced by requirements of the Supplementary Instructions, listed below. Such revisions are replacements and shall take precedence over the AIA Instructions to Bidders.

The Following Articles, revised paragraphs, and clauses have the same numerical designations occurring in the AIA Instructions to Bidders, and all additions follow in direct numbered sequence.

Article 1 - Definition

1.3 Delete paragraph 1.3 in its' entirety and substitute the following: Addenda are written or graphic instruments issued by the Architect and distributed by the Owner prior to the bid opening which modify or interpret the Bidding Documents by additions, deletions, clarifications or corrections.

Article 2 - Bidder's Representation

Add the following as paragraphs 2.2 and 2.3

2.2 A pre-bid conference may be held prior to bidding, at which time all interested parties are requested to attend. The intent of the project and Bidding Documents will be discussed. There will be a question and answer period, during which time prospective bidders are invited to request clarification or interpretation of any and all parts of the Bidding Documents. See Invitation to Bid for date, time, and location of Conference.

2.3 Guided tours of the Project Site, at the discretion of the owner, may be conducted prior to the pre-bid conference. Questions and or requests for clarification will not be addressed while the tour is being conducted.

ARTICLE 3 - BIDDING DOCUMENTS

3.1.1: Delete second sentence and substitute with the following:

Refer to instructions on Invitation to Bid Page 00201-1.

3.1.2: Delete Paragraph 3.1.2.

3.2.2: Delete the word "Architect" and substitute the word "Owner".

3.3.4: Delete paragraph 3.3.4 in its entirety and substitute with the following:

After the award of the Contract, no substitutions will be considered for the brands specified, except upon written request of the Contractor and written approval by the Architect and Owner. Substitutions shall be submitted in accordance with the requirements listed in Article 3.3.2.

3.3.5: Add new paragraph 3.3.5 as follows:

Approval by the Owner and the Architect of any such substitution shall not relieve the Contractor requesting the substitution of any responsibility for additional costs incurred by other trades for changes made necessary to accommodate the substituted item.

3.4.1: Delete paragraph 3.4.1 in its' entirety and substitute with the following:

Addenda will be issued by the Owner and will be mailed to all who are known by the Owner to have received a completed set of Bidding Documents.

ARTICLE 4 - BIDDING PROCEDURES

4.1.6: Add the following words to the beginning of paragraph - "Unless otherwise provided in the Contract Bidding Documents".

4.1.7: Delete paragraph 4.1.7 in its' entirety and substitute with the following:

Each copy of the Bid shall include the legal name of the bidder and a statement that the Bidder is a sole proprietor, partnership, corporation or other legal entity. Each copy shall be signed by the person or persons legally authorized to bind the Bidder to a contract. A Bid by a corporation shall further give the state of incorporation and, if the Owner so requests, have the corporate seal affixed. A Bid submitted by an agent shall have a current power of attorney attached certifying the agent's authority to bind the Bidder.

4.2.2: Delete paragraph 4.2.2 in its' entirety and substitute with the following:

Surety Bonds shall be written on forms substantially similar in content to AIA Document A310, and executed by a company authorized to transact business within the State of Connecticut, and the attorney-in-fact who executes the Bond on behalf of the Surety shall affix to the Bond a certified and current copy of his power of attorney.

ARTICLE 5 - CONSIDERATION OF BID

5.1.1: Add new paragraph 5.1.1 as follows:

Bidders are encouraged to attend the Town's bid opening at which time the public is afforded an opportunity to record bid prices received in response to the Town's solicitation. Bidders who would like the results of the bid but are unable to attend the bid opening must submit with their bid a self addressed stamped envelope and note requesting a copy of the bid results. **BIDDERS CALLING THE PURCHASING OFFICE FOR BID RESULTS WILL BE REFERRED TO THE ABOVE PROCEDURE.**

5.3.1: Delete 1st sentence and substitute the following:

It is the intent of the Owner to award a Contract to the bidder providing the best value to the Owner and is in accordance with requirements of the Bidding Documents and does not exceed the funds available.

5.3.3: Add new paragraph 5.3.3 as follows:

The Owner in awarding the Contract shall be guided by pertinent provisions of the "Town Charter" and "Code of Ordinances".

5.3.4: Add new paragraph 5.3.4 as follows:

A Bid may be rejected if the Bidder cannot show that he has the necessary supervisory staff, labor, capital, materials, machinery and resources to commence the work at the time prescribed and thereafter to prosecute and complete the Work at the rate or time specified; and that he is not already obligated for other work which would delay the commencement, prosecution, or completion of this work. A Bid may also be rejected if the bidder has previously failed to complete a contract within the time required, had previously performed similar work in an unsatisfactory manner, or in the judgment of the Owner is deemed unable to satisfactorily perform the Work.

5.3.5: Add new paragraph 5.3.5 as follows:

Prior to the award of a Contract, if so requested, Bidders must present satisfactory evidence that they have been regularly engaged in the business of doing such Work as they propose to execute and that they are prepared with the necessary supervisory staff, labor, capital, materials, and machinery, resources and responsibilities to conduct and complete the work to be contracted for in accordance with the Contract Documents and to begin it promptly when ordered.

ARTICLE 6 - POST BID INFORMATION

6.3.3: Delete paragraph 6.3.3 in its' entirety and substitute with the following:

Prior to the award of the Contract, the Owner will notify the Bidder in writing if either the Owner or the Architect, after due investigation, has a reasonable objection to any such proposed person or entity. If the Owner or Architect has reasonable objection to any such proposed person or entity, the Bidder may, at his option, (1) withdraw his Bid, or (2) submit an acceptable substitute person or entity. In the event of withdrawal under this sub-paragraph, Bid Security will not be forfeited, notwithstanding the provisions of Paragraph 4.4.1.

ARTICLE 7 - PERFORMANCE BOND AND PAYMENT BOND

7.1.1: Delete paragraph 7.1.1 in its' entirety and substitute with the following:

If the amount of the Contract to be awarded is Fifty Thousand Dollars ($50,000) or more, the successful Contract Bidder shall furnish and pay for Surety in the full amount of the Contract. This Bond shall provide 100% security for faithful performance and for payment of all persons performing labor or furnishing materials in connection with this Contract and shall be executed by a company authorized to transact business within the State of Connecticut.

The Contractor shall increase the principal amount of the performance and labor and materials payments bond(s) in direct proportion to any increase in the value of the Contract resulting from such change orders.

7.2.1: Delete paragraph 7.2.1 and substitute the following:

The Bidder shall deliver the required bonds to the Owner prior to execution of a contract and not later than (5) five days from notice of the Owner's intent to award the Contract to the bidder.

ARTICLE 9 - SUPPLEMENTARY INSTRUCTIONS

9.1: Add new paragraph 9.1 as follows:

9.1.1 - The Contractor shall agree that, except in the case of bona fide occupational qualification or need, neither he nor his Subcontractors and/or agents will refuse to hire or employ, or will bar or discharge from employment, or will otherwise discriminate against any individual in compensation or in terms, conditions, or privileges of employment because of race, color, national origin, ancestry, present or past history of mental disorder, mental retardation, or physical disability, including, but not limited to, blindness.

9.1.2 - The Contractor shall further agree that neither he nor his subcontractors and/or agents will discharge, expel, or otherwise discriminate against any person because he/she has opposed any discriminatory employment practice or because he has filed a complaint or testified or assisted in any proceeding under Connecticut General Statutes Sections 46a-82, 46a-83, or 46a-84 or as may be amended.

9.1.3 - The Contractor shall further agree that, except in the case of a bona fide occupational qualification or need, neither he nor his subcontractors and/or agents will advertise employment opportunities in such manner as to restrict such employment so as to discriminate against individuals because of their race, color, religious creed, age, sex, marital status, national origin, ancestry, present or past history of mental disorder, mental retardation or physical disability, including, but not limited to, blindness.

9.1.4 - The terms used in paragraphs 9.1.1, 9.1.2, and 9.1.3 shall have the definitions set forth in Connecticut General Statutes Section 46a-51 or as may be amended.

9.1.5 - The Contractor further agrees, for himself, his subcontractors, and agents, not to otherwise discriminate or permit discrimination against any person or group of persons on the grounds of race, color, religious creed, age, sex, marital status, national origin, ancestry, present or past history of mental disorder, mental retardation or physical disability (including but not limited to blindness) in any manner prohibited by the laws and regulations of the United States, State of Connecticut or Town of West Hartford.

9.2: Add new paragraph 9.2 as follows:

Time: The Contractor to whom this Contract may be awarded, will be required to commence work at the site within ten (10) days of Contract signing unless, otherwise indicated in the sample AIA Standard Form of Agreement Form A101. The work shall be executed diligently thereafter and shall be completed in accordance with the Contract Documents.

9.3: Add new paragraph 9.3 as follows:

The Bidder is directed to the Bid Forms for additional information, instructions, qualifications and requirements.

Bid of _____, BIDDER,
(Name of Bidder)

FOR **DECK RENOVATION AND EXPANSION OF ROCKLEDGE CLUBHOUSE AT ROCKLEDGE COUNTRY CLUB BID#6543F** FOR THE TOWN OF WEST HARTFORD, CONNECTICUT.

To: Town of West Hartford
Peter Privitera, Purchasing Agent
Purchasing Services

The undersigned proposes to furnish all labor, materials and equipment, and to perform all work described in the Contract Bidding Documents for **DECK RENOVATION AND EXPANSION OF ROCKLEDGE CLUBHOUSE AT ROCKLEDGE COUNTRY CLUB BID#6543F** in accordance with the Contract Bidding Documents for the amounts shown herein under Schedule of Bids.

Receipt acknowledged of the following addenda:

Addendum No. _____ Dated _____

Addendum No. _____ Dated _____

Addendum No. _____ Dated _____

Addendum No. _____ Dated _____

Addendum No. _____ Dated _____

Addendum No. _____ Dated _____

It is understood and agreed that the Owner has the privilege of rejecting any or all Bids and of waiving informality in any Bid.

It is further understood and agreed that this Bid shall be irrevocable for ninety (90) calendar days after Bid receipt date.

SCHEDULE OF BIDS

Base Bid No. 1 for furnishing all labor, materials, equipment and all else whatsoever necessary to perform all work described in the Contract Bidding Documents for **DECK RENOVATION AND EXPANSION OF ROCKLEDGE CLUBHOUSE AT ROCKLEDGE COUNTRY CLUB BID#6543F**

for the lump sum of _____

_____Dollars ($_____)

UNIT PRICING:

CONTRACT TIME

The undersigned Bidder will accomplish all Work required by the Contract Bidding Documents and will provide Substantial completion by **April 25, 2017**, and will provide the Project, ready for Final Completion, by **May 5, 2017**.

BIDDER QUALIFICATIONS

A: If the Bidder is a Corporation, fill out:

The Bidder is a Corporation, organized under the laws of _____, having its principal office at ____. The Principal officers of said Corporation, with their titles and addresses, are as follows:

_____

_____

_____

_____

All persons interested in the Bid as principals are to be named above.

B. Bid must be accompanied by either a certified check, treasurer's check or a Bid Bond, as provided in the Invitation to Bid. If a check is enclosed herein, fill out the following:

_____

(Name of Bank) (Address of Bank) (Amount of Check)

C. Attached hereto are two forms entitled "Summary of Work History". The Bidder is required to complete Form 1 and 2.

D. The Bidder is required to submit a Certificate of Insurance in amounts and types specified in Article 11 of the Supplementary General Conditions or provide a letter from the Bidder's insurance agent or broker that such insurance is obtainable at the time of execution of the Agreement and that a Certificate of Insurance shall be provided to that effect not later than the date of Contract signing. (See page #00204- 7)

E. Contract award will be by AIA Agreement Form A101. A copy of the AIA Form A101 is included for the Bidder's information. The parties shall enter into an Agreement in substantially the same form as the attached subject to technical and other modifications as the parties mutually agree. A purchase order shall be issued by the Town subsequent to the execution of the Agreement.

F. The Contractor by executing this Bid agrees and represents that no person acting for or employed by the Town of West Hartford is directly or indirectly interested in the Bid or proposed Agreement or in the supplies or works to which it relates, or will receive any part of the profit or any commission there from in any manner which is unethical or contrary to the best interest of the Owner.

G. The Contractor agrees and warrants that in the performance of this Contract it will not discriminate or permit discrimination against any person or group of persons on the grounds of sex, race, color, religion, age, marital status, ancestry, national origin, past history of mental disorder, mental retardation or physical disability or other basis in any manner prohibited by the laws of the United States, the State of Connecticut, or the Town of West Hartford.

H. The Contractor shall employ a full time, on-the-job Project Superintendent as his representative.

I. The Contractor and/or Subcontractor offers and agrees to assign to the Town of West Hartford and/or the West Hartford Board of Education all rights, titles and interest in all causes of action it may have under Section 4 of the Clayton Act., 15 U.S.C. Section 15, or under Connecticut General Statutes 35-24 et. seq., as amended, arising out of the purchase of services, property, or intangibles of any kind pursuant to the Agreement, or Subcontracts thereunder. This assignment shall be made and become effective at the time the Town/Board awards or accepts such Agreement, without further acknowledgment by the parties. In the alternative, at the option of the Town, the Contractor and/or Subcontractor agrees to pay to the Town its proportionate share of recoveries for anti-trust violations which relate to purchases pursuant to this Contract, or Subcontracts hereunder. The Contractor and/or Subcontractor agrees promptly to notify the Purchasing Agent of the Town of West Hartford of suspected anti-trust violations and claims.

J. The Bidder is aware of and agrees that, if awarded an Agreement, he is bound by the following indemnification language:

1. To the fullest extent permitted by law, the Contractor shall release, defend, indemnify, and hold harmless the Town of West Hartford, and the West Hartford Board of Education, their respective boards, commissions, officers, officials, employees, agents, representatives, and servants from any and all suits, claims, losses, damages, costs (including without limitation reasonable attorneys' fees), compensation, penalties, fines, liabilities or judgments or any name or nature for:

    1. Bodily injury, sickness, disease, or death; and/or

    2. Damage to or destruction of property, real or personal; and/or

    3. Financial losses (including, without limitation, those caused by loss of use)

    sustained by any person or concern, including officers, employees, agents, Subcontractors or servants of the Town, the Board of Education, or the Contractor, or by the public, which is cause or alleged to have been caused in whole or in part by the negligent act(s) or omission(s) of the Contractor, its officers, employees, agents, or Subcontractors, in the performance of this Agreement or from the inaccuracy of any representation or warranty of the Contractor contained in the Contract Documents. This indemnity shall not be affected by other portions of the Agreement relating to insurance requirements.

2. To the fullest extent permitted by law, the Contractor agrees to release, defend, indemnify, and hold harmless the West Hartford Board of Education, and the Town of West Hartford, their respective boards and commissions, officials, officers, employees, agents, representatives, and servants from any loss, claim, cost penalty, fine or damage that may arise out of the failure of the Contractor, its officers, agents, employees or Subcontractors to comply with any laws or regulations of the United States of America, the State of Connecticut, the Town of West Hartford, West Hartford Board of Education, or their respective agencies. This undertaking shall not be affected by other portions of the Agreement relating to insurance requirements.

K. Substantial completion must be achieved by **April 25, 2017** and final completion must be achieved by **May 5, 2017**. The Contractor shall pay the Owner liquidated damages in the amount of Three Hundred Dollars ($300.00) per calendar day, which sum is hereby agreed upon, and shall be assessed not as a penalty, but as liquidated damages which the Owner shall suffer by reason of such default. The Owner and Contractor shall acknowledge that failure to effect substantial completion as noted above will precipitate inconvenience and disruption. The Owner and Contractor shall acknowledge that such damages are uncertain or difficult to prove and that the amounts established herein are reasonable assessment of these damages.

BIDDER:

_____
COMPANY

Bidder must sign. Failure to provide an original signature will result in rejection of the bid.

®

_____
SIGNATURE BY DULY AUTHORIZED
(SEAL)

_____
PRINT OR TYPE NAME

The bidder agrees that by affixing their signature to this request for bids, the authorized signatory grants approval to the Town of West Hartford to obtain third party credit reports for the purpose of assessing the financial capacity of the business entity tendering such bid to the Town.

_____
TITLE

_____
DATE

_____
ADDRESS

_____
TELEPHONE

_____
FAX #

_____
E-MAIL

_____
VENDOR FEIN #

BID FORMS TO BE SUBMITTED IN DUPLICATE

If you are not registered with the Town of West Hartford, please go to www.westhartfordct.gov/gov/departments/purchasing/vendor_registration.asp and select register. Only registered vendors can be awarded the contract.

TO: Town of West Hartford
Peter Privitera
Purchasing Agent

FROM:

CLIENT:

DATE:

Dear Mr. Privitera:

In accordance with page 00204-3, Paragraph D of the "Bid Form", please be advised that my client currently has or will have by the date of the execution of the Agreement for this project, a Certificate of Insurance in amounts and types as specified in Article 11 of the Supplementary General Conditions.

_____

Signature
Authorized Agent or Broker

SUMMARY OF WORK HISTORY

1. **The bidder is required to state in the spaces provided below work that the bidder has performed of a similar character to the work described in the Contract Bidding Documents.**

Project Name	Project Description	Contract Award Amount	Client	Contact Person	Telephone #

SUMMARY OF WORK HISTORY

2. The bidder is further required to furnish a complete list of all projects for which he has signed a construction contract within the past 36 months.

Project Name	Project Description	Contract Award Amount	Client	Contact Person	Telephone #

3.0 LABOR REQUIREMENTS

Since there are other projects anticipated to be in progress at this location during this time period, ALL BIDS MUST INCORPORATE STATE OF CONNECTICUT PREVAILING WAGE RATES AS PROVIDED IN THIS DOCUMENT. The awarded bidder will be required to pay prevailing wages.

3.01 PREVAILING WAGE RATES

3.01.01 The Contractor shall certify in writing and under oath to the Labor Commissioner the pay scale to be used by the Contractor and any Subcontractors. The provisions of this section shall not apply where the total cost of all work to be performed by ALL Contractors and Subcontractors in connection with new construction of any public works project is less than FOUR HUNDRED thousand dollars or where the total cost of all work to be performed by ALL Contractors and Subcontractors in connection with any remodeling, refinishing, refurbishing, rehabilitation, alteration or repair of any public works project is less than ONE HUNDRED thousand dollars. The Contractor shall fully comply with all provisions of Connecticut General Statutes (CGS) 31-53 and shall be subject to such sanctions mandated for violations of said Public Act.

3.01.02 The wages paid on an hourly basis to any mechanic, laborer or workman employed upon the work herein contracted to be done and the amount of payment or contribution paid or payable on behalf of each such employee to any employee welfare fund, as defined in CGS 31-53 shall be at a rate equal to the rate customary or prevailing for the same work in the same trade or occupation in the Town in which such public works project is being constructed. Any contractor who is not obligated by agreement to make payment or contribution on behalf of such employees to any such employee welfare fund shall pay to each employee as part of his wages the amount of payment or contribution for his classification on each pay day.

3.01.03 The contractor shall not be paid in accordance with the payment provisions of these Contract Bidding Documents unless the contractor is in full compliance with the mandates of CGS 31-53.

3.01.04 Bidders are further advised that if the initial consideration due and payable pursuant to the Contract exceeds the mandatory limits at which prevailing wages rates are required, then the contractor and any subcontractors shall pay the appropriate prevailing wages retroactive to the date of commencement of work on the project. The contractor shall not receive any additional compensation from the Owner as a result of an occurrence of the aforementioned event.

Project: Rockledge Country Club Exterior Deck Expansion

Minimum Rates and Classifications for Building Construction

ID# : B 22790

Connecticut Department of Labor
Wage and Workplace Standards Division

By virtue of the authority vested in the Labor Commissioner under provisions of Section 31-53 of the General Statutes of Connecticut, as amended, the following are declared to be the prevailing rates and welfare payments and will apply only where the contract is advertised for bid within 20 days of the date on which the rates are established. Any contractor or subcontractor not obligated by agreement to pay to the welfare and pension fund shall pay this amount to each employee as part of his/her hourly wages.

Project Number:

Project Town: West Hartford

State#:

FAP#:

Project: Rockledge Country Club Exterior Deck Expansion

CLASSIFICATION	Hourly Rate	Benefits
1a) Asbestos Worker/Insulator (Includes application of insulating materials, protective coverings, coatings, & finishes to all types of mechanical systems; application of firestopping material for wall openings & penetrations in walls, floors, ceilings	35.75	28.82
1b) Asbestos/Toxic Waste Removal Laborers: Asbestos removal and encapsulation (except its removal from mechanical systems which are not to be scrapped), toxic waste removers, blasters.**See Laborers Group 7**		
1c) Asbestos Worker/Heat and Frost Insulator	37.15	27.56

As of: **Friday, October 21, 2016**

Project: Rockledge Country Club Exterior Deck Expansion

2) Boilermaker	35.24	25.01
3a) Bricklayer, Cement Mason, Concrete Finisher (including caulking), Stone Masons	33.48	29.16 + a
3b) Tile Setter	34.30	24.15
3c) Terrazzo Mechanics and Marble Setters	31.69	22.35
3d) Tile, Marble & Terrazzo Finishers	26.43	20.59
3e) Plasterer	33.48	29.16

As of: **Friday, October 21, 2016**

Project: Rockledge Country Club Exterior Deck Expansion

------LABORERS------

4) Group 1: Laborers (common or general), acetylene burners, carpenter tenders, concrete specialists, wrecking laborers, fire watchers.	28.55	18.90
4a) Group 2: Mortar mixers, plaster tender, power buggy operators, powdermen, fireproofer/mixer/nozzleman (Person running mixer and spraying fireproof only).	28.80	18.90
4b) Group 3: Jackhammer operators/pavement breaker, mason tender (brick), mason tender (cement/concrete), forklift operators and forklift operators (masonry).	29.05	18.90
4c) **Group 4: Pipelayers (Installation of water, storm drainage or sewage lines outside of the building line with P6, P7 license) (the pipelayer rate shall apply only to one or two employees of the total crew who primary task is to actually perform the mating of pipe sections) P6 and P7 rate is $26.80.	28.80	18.90
4d) Group 5: Air track operator, sand blaster and hydraulic drills.	29.30	18.90

As of: **Friday, October 21, 2016**

Project: Rockledge Country Club Exterior Deck Expansion

4e) Group 6: Blasters, nuclear and toxic waste removal.	31.55	18.90
4f) Group 7: Asbestos/lead removal and encapsulation (except it's removal from mechanical systems which are not to be scrapped).	29.55	18.90
4g) Group 8: Bottom men on open air caisson, cylindrical work and boring crew.	28.38	18.90
4h) Group 9: Top men on open air caisson, cylindrical work and boring crew.	27.86	18.90
4i) Group 10: Traffic Control Signalman	16.00	18.90
5) Carpenter, Acoustical Ceiling Installation, Soft Floor/Carpet Laying, Metal Stud Installation, Form Work and Scaffold Building, Drywall Hanging, Modular-Furniture Systems Installers, Lathers, Piledrivers, Resilient Floor Layers.	32.00	24.42

As of: **Friday, October 21, 2016**

Project: Rockledge Country Club Exterior Deck Expansion

5a) Millwrights	32.47	24.84
6) Electrical Worker (including low voltage wiring) (Trade License required: E1,2 L-5,6 C-5,6 T-1,2 L-1,2 V-1,2,7,8,9)	38.65	24.42+3% of gross wage
7a) Elevator Mechanic (Trade License required: R-1,2,5,6)	49.00	29.985+a+b
-----LINE CONSTRUCTION----		
Groundman	24.99	6.25%+11.81
Linemen/Cable Splicer	45.43	6.25%+20.70

As of: **Friday, October 21, 2016**

Project: Rockledge Country Club Exterior Deck Expansion

8) Glazier (Trade License required: FG-1,2)	35.58	20.15 + a
9) Ironworker, Ornamental, Reinforcing, Structural, and Precast Concrete Erection	35.22	31.99 + a
----OPERATORS----		
Group 1: Crane handling or erecting structural steel or stone, hoisting engineer 2 drums or over, front end loader (7 cubic yards or over), work boat 26 ft. and over and Tunnel Boring Machines. (Trade License Required)	38.55	23.55 + a
Group 2: Cranes (100 ton rate capacity and over); Excavator over 2 cubic yards; Piledriver ($3.00 premium when operator controls hammer); Bauer Drill/Caisson. (Trade License Required)	38.23	23.55 + a
Group 3: Excavator; Backhoe/Excavator under 2 cubic yards; Cranes (under 100 ton rated capacity), Grader/Blade; Master Mechanic; Hoisting Engineer (all types of equipment where a drum and cable are used to hoist or drag material regardless of motive power of operation), Rubber Tire Excavator (Drott-1085 or similar);Grader Operator; Bulldozer Fine Grade. (slopes, shaping, laser or GPS, etc.). (Trade License Required)	37.49	23.55 + a

As of: **Friday, October 21, 2016**

Project: Rockledge Country Club Exterior Deck Expansion

Group 4: Trenching Machines; Lighter Derrick; Concrete Finishing Machine; CMI Machine or Similar; Koehring Loader (Skooper).	37.10	23.55 + a
Group 5: Specialty Railroad Equipment; Asphalt Paver; Asphalt Reclaiming Machine; Line Grinder; Concrete Pumps; Drills with Self Contained Power Units; Boring Machine; Post Hole Digger; Auger; Pounder; Well Digger; Milling Machine (over 24" Mandrell)	36.51	23.55 + a
Group 5 continued: Side Boom; Combination Hoe and Loader; Directional Driller; Pile Testing Machine.	36.51	23.55 + a
Group 6: Front End Loader (3 up to 7 cubic yards); Bulldozer (rough grade dozer).	36.20	23.55 + a
Group 7: Asphalt roller, concrete saws and cutters (ride on types), vermeer concrete cutter, Stump Grinder; Scraper; Snooper; Skidder; Milling Machine (24" and under Mandrell).	35.86	23.55 + a
Group 8: Mechanic, grease truck operator, hydroblaster; barrier mover; power stone spreader; welding; work boat under 26 ft.; transfer machine.	35.46	23.55 + a

As of: **Friday, October 21, 2016**

Project: Rockledge Country Club Exterior Deck Expansion

Group 9: Front end loader (under 3 cubic yards), skid steer loader regardless of attachments, (Bobcat or Similar): forklift, power chipper; landscape equipment (including Hydroseeder).	35.03	23.55 + a
Group 10: Vibratory hammer; ice machine; diesel and air, hammer, etc.	32.99	23.55 + a
Group 11: Conveyor, earth roller, power pavement breaker (whiphammer), robot demolition equipment.	32.99	23.55 + a
Group 12: Wellpoint operator.	32.93	23.55 + a
Group 13: Compressor battery operator.	32.35	23.55 + a
Group 14: Elevator operator; tow motor operator (solid tire no rough terrain).	31.21	23.55 + a

As of: **Friday, October 21, 2016**

Project: Rockledge Country Club Exterior Deck Expansion

Group 15: Generator Operator; Compressor Operator; Pump Operator; Welding Machine Operator; Heater Operator.	30.80	23.55 + a
Group 16: Maintenance Engineer/Oiler.	30.15	23.55 + a
Group 17: Portable asphalt plant operator; portable crusher plant operator; portable concrete plant operator.	34.46	23.55 + a
Group 18: Power safety boat; vacuum truck; zim mixer; sweeper; (Minimum for any job requiring a CDL license).	32.04	23.55 + a

------PAINTERS (Including Drywall Finishing)------

10a) Brush and Roller	32.02	20.15

As of: **Friday, October 21, 2016**

Project: Rockledge Country Club Exterior Deck Expansion

10b) Taping Only/Drywall Finishing	32.77	20.15
10c) Paperhanger and Red Label	32.52	20.15
10e) Blast and Spray	35.02	20.15
11) Plumber (excluding HVAC pipe installation) (Trade License required: P-1,2,6,7,8,9 J-1,2,3,4 SP-1,2)	40.62	29.71
12) Well Digger, Pile Testing Machine	33.01	19.40 + a
13) Roofer (composition)	34.12	18.58

As of: **Friday, October 21, 2016**

Project: Rockledge Country Club Exterior Deck Expansion

14) Roofer (slate & tile)	34.62	18.58
15) Sheetmetal Worker (Trade License required for HVAC and Ductwork: SM-1,SM-2,SM-3,SM-4,SM-5,SM-6)	36.00	34.51
16) Pipefitter (Including HVAC work) (Trade License required: S-1,2,3,4,5,6,7,8 B-1,2,3,4 D-1,2,3,4, G-1, G-2, G-8 & G-9)	40.62	29.71
------TRUCK DRIVERS------		
17a) 2 Axle	28.83	21.39 + a
17b) 3 Axle, 2 Axle Ready Mix	28.93	21.39 + a

As of: **Friday, October 21, 2016**

Project: Rockledge Country Club Exterior Deck Expansion

17c) 3 Axle Ready Mix	28.98	21.39 + a
17d) 4 Axle, Heavy Duty Trailer up to 40 tons	29.03	21.39 + a
17e) 4 Axle Ready Mix	29.08	21.39 + a
17f) Heavy Duty Trailer (40 Tons and Over)	29.28	21.39 + a
17g) Specialized Earth Moving Equipment (Other Than Conventional Type on-the-Road Trucks and Semi-Trailers, Including Euclids)	29.08	21.39 + a
18) Sprinkler Fitter (Trade License required: F-1,2,3,4)	41.37	20.77 + a

As of: **Friday, October 21, 2016**

19) Theatrical Stage Journeyman	25.76	7.34

Project: Rockledge Country Club Exterior Deck Expansion

Welders: Rate for craft to which welding is incidental.

**Note: Hazardous waste removal work receives additional $1.25 per hour for truck drivers.*

***Note: Hazardous waste premium $3.00 per hour over classified rate*

ALL Cranes: When crane operator is operating equipment that requires a fully licensed crane operator to operate he receives an extra $3.00 premium in addition to the hourly wage rate and benefit contributions:

1) Crane handling or erecting structural steel or stone; hoisting engineer (2 drums or over)

2) Cranes (100 ton rate capacity and over) Bauer Drill/Caisson

3) Cranes (under 100 ton rated capacity)

Crane with 150 ft. boom (including jib) - $1.50 extra
Crane with 200 ft. boom (including jib) - $2.50 extra
Crane with 250 ft. boom (including jib) - $5.00 extra
Crane with 300 ft. boom (including jib) - $7.00 extra
Crane with 400 ft. boom (including jib) - $10.00 extra

All classifications that indicate a percentage of the fringe benefits must be calculated at the percentage rate times the "base hourly rate".

Apprentices duly registered under the Commissioner of Labor's regulations on "Work Training Standards for Apprenticeship and Training Programs" Section 31-51-d-1 to 12, are allowed to be paid the appropriate percentage of the prevailing journeymen hourly base and the full fringe benefit rate, providing the work site ratio shall not be less than one full-time journeyperson instructing and supervising the work of each apprentice in a specific trade.

The Prevailing wage rates applicable to this project are subject to annual adjustments each July 1st for the duration of the project.

Each contractor shall pay the annual adjusted prevailing wage rate that is in effect each July 1st, as posted by the Department of Labor.

It is the contractor's responsibility to obtain the annual adjusted prevailing wage rate increases directly from the Department of Labor's website.

The annual adjustments will be posted on the Department of Labor's Web page: www.ct.gov/dol. For those without internet access, please contact the division listed below.

The Department of Labor will continue to issue the initial prevailing wage rate schedule to the Contracting Agency for the project.

All subsequent annual adjustments will be posted on our Web Site for contractor access.

Contracting Agencies are under no obligation pursuant to State labor law to pay any increase due to the annual adjustment provision.

***As of:* Friday, October 21, 2016**

Project: Rockledge Country Club Exterior Deck Expansion

Effective October 1, 2005 - Public Act 05-50: any person performing the work of any mechanic, laborer, or worker shall be paid prevailing wage

All Person who perform work ON SITE must be paid prevailing wage for the appropriate mechanic, laborer, or worker classification.

All certified payrolls must list the hours worked and wages paid to All Persons who perform work ON SITE regardless of their ownership i.e.: (Owners, Corporate Officers, LLC Members, Independent Contractors, et. al)

Reporting and payment of wages is required regardless of any contractual relationship alleged to exist between the contractor and such person.

~~Unlisted classifications needed for work not included within the scope of the classifications listed may be added after award only as provided in the labor standards contract clause (29 CFR 5.5 (a) (1) (ii)).

Please direct any questions which you may have pertaining to classification of work and payment of prevailing wages to the Wage and Workplace Standards Division, telephone (860)263-6790.

As of: **Friday, October 21, 2016**

Opportunity • Guidance • Support

CONNECTICUT DEPARTMENT OF LABOR

THIS IS A PUBLIC WORKS PROJECT

Covered by the

PREVAILING WAGE LAW

CT General Statutes Section 31-53

If you have QUESTIONS regarding your wages
CALL (860) 263-6790

Section 31-55 of the CT State Statutes requires every contractor or subcontractor performing work for the state to post in a prominent place the prevailing wages as determined by the Labor Commissioner.

Sec. 31-53b. Construction safety and health course. New miner training program. Proof of completion required for mechanics, laborers and workers on public works projects. Enforcement. Regulations. Exceptions. (a) Each contract for a public works project entered into on or after July 1, 2009, by the state or any of its agents, or by any political subdivision of the state or any of its agents, described in subsection (g) of section 31-53, shall contain a provision requiring that each contractor furnish proof with the weekly certified payroll form for the first week each employee begins work on such project that any person performing the work of a mechanic, laborer or worker pursuant to the classifications of labor under section 31-53 on such public works project, pursuant to such contract, has completed a course of at least ten hours in duration in construction safety and health approved by the federal Occupational Safety and Health Administration or, has completed a new miner training program approved by the Federal Mine Safety and Health Administration in accordance with 30 CFR 48 or, in the case of telecommunications employees, has completed at least ten hours of training in accordance with 29 CFR 1910.268.

(b) Any person required to complete a course or program under subsection (a) of this section who has not completed the course or program shall be subject to removal from the worksite if the person does not provide documentation of having completed such course or program by the fifteenth day after the date the person is found to be in noncompliance. The Labor Commissioner or said commissioner's designee shall enforce this section.

(c) Not later than January 1, 2009, the Labor Commissioner shall adopt regulations, in accordance with the provisions of chapter 54, to implement the provisions of subsections (a) and (b) of this section. Such regulations shall require that the ten-hour construction safety and health courses required under subsection (a) of this section be conducted in accordance with federal Occupational Safety and Health Administration Training Institute standards, or in accordance with Federal Mine Safety and Health Administration Standards or in accordance with 29 CFR 1910.268, as appropriate. The Labor Commissioner shall accept as sufficient proof of compliance with the provisions of subsection (a) or (b) of this section a student course completion card issued by the federal Occupational Safety and Health Administration Training Institute, or such other proof of compliance said commissioner deems appropriate, dated no earlier than five years before the commencement date of such public works project.

(d) This section shall not apply to employees of public service companies, as defined in section 16-1, or drivers of commercial motor vehicles driving the vehicle on the public works project and delivering or picking up cargo from public works projects provided they perform no labor relating to the project other than the loading and unloading of their cargo.

(P.A. 06-175, S. 1; P.A. 08-83, S. 1.)

History: P.A. 08-83 amended Subsec. (a) by making provisions applicable to public works project contracts entered into on or after July 1, 2009, replacing provision re total cost of work with reference to Sec. 31-53(g), requiring proof in certified payroll form that new mechanic, laborer or worker has completed a 10-hour or more construction safety course and adding provision re new miner training program, amended Subsec. (b) by substituting "person" for "employee" and adding "or program", amended Subsec. (c) by adding "or in accordance with Federal Mine
Safety and Health Administration Standards" and setting new deadline of January 1, 2009, deleted former Subsec. (d) re "public building", added new Subsec. (d) re exemptions for public service company employees and delivery drivers who perform no labor other than delivery and made conforming and technical changes, effective January 1, 2009.

Informational Bulletin

THE 10-HOUR OSHA CONSTRUCTION SAFETY AND HEALTH COURSE

(applicable to public building contracts entered into *on or after July 1, 2007*, where the total cost of all work to be performed is at least $100,000)

(1) This requirement was created by Public Act No. 06-175, which is codified in Section 31-53b of the Connecticut General Statutes (pertaining to the prevailing wage statutes);

(2) The course is required for public building construction contracts (projects funded in whole or in part by the state or any political subdivision of the state) entered into on or after July 1, 2007;

(3) It is required of private employees (not state or municipal employees) and apprentices who perform manual labor for a general contractor or subcontractor on a public building project where the total cost of all work to be performed is at least $100,000;

(4) The ten-hour construction course pertains to the ten-hour Outreach Course conducted in accordance with federal OSHA Training Institute standards, and, for telecommunications workers, a ten-hour training course conducted in accordance with federal OSHA standard, 29 CFR 1910.268;

(5) The internet website for the federal OSHA Training Institute is http://www.osha.gov/fso/ote/training/edcenters/fact_sheet.html;

(6) The statutory language leaves it to the contractor and its employees to determine who pays for the cost of the ten-hour Outreach Course;

(7) Within 30 days of receiving a contract award, a general contractor must furnish proof to the Labor Commissioner that all employees and apprentices performing manual labor on the project will have completed such a course;

(8) Proof of completion may be demonstrated through either: (a) the presentation of a *bona fide* student course completion card issued by the federal OSHA Training Institute; *or* (2) the presentation of documentation provided to an employee by a trainer certified by the Institute pending the actual issuance of the completion card;

(9) Any card with an issuance date more than 5 years prior to the commencement date of the construction project shall not constitute proof of compliance;

(10) Each employer shall affix a copy of the construction safety course completion card to the certified payroll submitted to the contracting agency in accordance with Conn. Gen. Stat. § 31-53(f) on which such employee's name first appears;

(11) Any employee found to be in non-compliance shall be subject to removal from the worksite if such employee does not provide satisfactory proof of course completion to the Labor Commissioner by the fifteenth day after the date the employee is determined to be in noncompliance;

(12) Any such employee who is determined to be in noncompliance may continue to work on a public building construction project for a maximum of fourteen consecutive calendar days while bringing his or her status into compliance;

(13) The Labor Commissioner may make complaint to the prosecuting authorities regarding any employer or agent of the employer, or officer or agent of the corporation who files a false certified payroll with respect to the status of an employee who is performing manual labor on a public building construction project;

(14) The statute provides the minimum standards required for the completion of a safety course by manual laborers on public construction contracts; any contractor can exceed these minimum requirements; and

(15) Regulations clarifying the statute are currently in the regulatory process, and shall be posted on the CTDOL website as soon as they are adopted in final form.

(16) Any questions regarding this statute may be directed to the Wage and Workplace Standards Division of the Connecticut Labor Department via the internet website of http://www.ctdol.state.ct.us/wgwkstnd/wgemenu.htm; or by telephone at (860)263-6790.

THE ABOVE INFORMATION IS PROVIDED EXCLUSIVELY AS AN EDUCATIONAL RESOURCE, AND IS NOT INTENDED AS A SUBSTITUTE FOR LEGAL INTERPRETATIONS WHICH MAY ULTMATELY ARISE CONCERNIG THE CONSTRUCTION OF THE STATUTE OR THE REGULATIONS.

November 29, 2006

Notice

To All Mason Contractors and Interested Parties Regarding Construction Pursuant to Section 31-53 of the Connecticut General Statutes (Prevailing Wage)

The Connecticut Labor Department Wage and Workplace Standards Division is empowered to enforce the prevailing wage rates on projects covered by the above referenced statute.

Over the past few years the Division has withheld enforcement of the rate in effect for workers who operate a forklift on a prevailing wage rate project due to a potential jurisdictional dispute.

The rate listed in the schedules and in our Occupational Bulletin (see enclosed) has been as follows:

Forklift Operator:

- **Laborers (Group 4) Mason Tenders** - operates forklift solely to assist a mason to a maximum height of nine feet only.

- **Power Equipment Operator (Group 9)** - operates forklift to assist any trade and to assist a mason to a height over nine feet.

The U.S. Labor Department conducted a survey of rates in Connecticut but it has not been published and the rate in effect remains as outlined in the above Occupational Bulletin.

Since this is a classification matter and not one of jurisdiction, effective January 1, 2007 the Connecticut Labor Department will enforce the rate on each schedule in accordance with our statutory authority.

Your cooperation in filing appropriate and accurate certified payrolls is appreciated.

STATUTE 31-55a

- SPECIAL NOTICE -

To: All State and Political Subdivisions,Their Agents, and Contractors

Connecticut General Statute 31-55a - Annual adjustments to wage rates by contractors doing state work.

Each contractor that is awarded a contract on or after October 1, 2002, for (1) the construction of a state highway or bridge that falls under the provisions of section 31-54 of the general statutes, or (2) the construction, remodeling, refinishing, refurbishing, rehabilitation, alteration or repair of any public works project that falls under the provisions of section 31-53 of the general statutes shall contact the Labor Commissioner on or before July first of each year, for the duration of such contract, to ascertain the prevailing rate of wages on an hourly basis and the amount of payment or contributions paid or payable on behalf of each mechanic, laborer or worker employed upon the work contracted to be done, and shall make any necessary adjustments to such prevailing rate of wages and such payment or contributions paid or payable on behalf of each such employee, effective each July first.

- The prevailing wage rates applicable to any contract or subcontract awarded on or after October 1, 2002 are subject to annual adjustments each July 1st for the duration of any project which was originally advertised for bids on or after October 1, 2002.
- Each contractor affected by the above requirement shall pay the annual adjusted prevailing wage rate that is in effect each July 1st, as posted by the Department of Labor.
- It is the ***contractor's*** responsibility to obtain the annual adjusted prevailing wage rate increases directly from the Department of Labor's Web Site. The annual adjustments will be posted on the Department of Labor Web page: www.ctdol.state.ct.us. For those without internet access, please contact the division listed below.
- The Department of Labor will continue to issue the initial prevailing wage rate schedule to the Contracting Agency for the project. All subsequent annual adjustments will be posted on our Web Site for contractor access.

Any questions should be directed to the Contract Compliance Unit, Wage and Workplace Standards Division, Connecticut Department of Labor, 200 Folly Brook Blvd., Wethersfield, CT 06109 at (860)263-6790.

Connecticut Department of Labor
Wage and Workplace Standards Division
FOOTNOTES

⇨ Please Note: If the "Benefits" listed on the schedule for the following occupations includes a letter(s) (+ a or + a+b for instance), refer to the information below.

Benefits to be paid at the appropriate prevailing wage rate for the listed occupation.

If the "Benefits" section for the occupation lists only a dollar amount, disregard the information below.

Bricklayers, Cement Masons, Cement Finishers, Concrete Finishers, Stone Masons
(Building Construction) and
(Residential- Hartford, Middlesex, New Haven, New London and Tolland Counties)

a. Paid Holiday: Employees shall receive 4 hours for Christmas Eve holiday provided the employee works the regularly scheduled day before and after the holiday. Employers may schedule work on Christmas Eve and employees shall receive pay for actual hours worked in addition to holiday pay.

Elevator Constructors: Mechanics

a. Paid Holidays: New Year's Day, Memorial Day, Independence Day, Labor Day, Veterans' Day, Thanksgiving Day, Christmas Day, plus the Friday after Thanksgiving.

b. Vacation: Employer contributes 8% of basic hourly rate for 5 years or more of service or 6% of basic hourly rate for 6 months to 5 years of service as vacation pay credit.

Glaziers

a. Paid Holidays: Labor Day and Christmas Day.

Power Equipment Operators
(Heavy and Highway Construction & Building Construction)

a. Paid Holidays: New Year's Day, Good Friday, Memorial day, Independence Day, Labor Day, Thanksgiving Day and Christmas Day, provided the employee works 3 days during the week in which the holiday falls, if scheduled, and if scheduled, the working day before and the working day after the holiday. Holidays falling on Saturday may be observed on Saturday, or if the employer so elects, on the preceding Friday.

Ironworkers

a. Paid Holiday: Labor Day provided employee has been on the payroll for the 5 consecutive work days prior to Labor Day.

Laborers (Tunnel Construction)

a. Paid Holidays: New Year's Day, Memorial Day, Independence Day, Labor Day, Thanksgiving Day and Christmas Day. No employee shall be eligible for holiday pay when he fails, without cause, to work the regular work day preceding the holiday or the regular work day following the holiday.

Roofers

a. Paid Holidays: July 4th, Labor Day, and Christmas Day provided the employee is employed 15 days prior to the holiday.

Sprinkler Fitters

a. Paid Holidays: Memorial Day, July 4th, Labor Day, Thanksgiving Day and Christmas Day, provided the employee has been in the employment of a contractor 20 working days prior to any such paid holiday.

Truck Drivers

(Heavy and Highway Construction & Building Construction)

a. Paid Holidays: New Year's Day, Memorial Day, Independence Day, Labor Day, Thanksgiving Day, Christmas day, and Good Friday, provided the employee has at least 31 calendar days of service and works the last scheduled day before and the first scheduled day after the holiday, unless excused.

AIA® Document A101™ – 2007

Standard Form of Agreement Between Owner and Contractor where the basis of payment is a Stipulated Sum

AGREEMENT made as of the day of in the year
(In words, indicate day, month and year.)

BETWEEN the Owner:
(Name, legal status, address and other information)

TOWN OF WEST HARTFORD
50 SOUTH MAIN STREET
WEST HARTFORD, CT 06107

and the Contractor:
(Name, legal status, address and other information)

for the following Project:
(Name, location and detailed description)

DECK RENOVATION AND EXPANSION OF ROCKLEDGE CLUBHOUSE BID 6543F
289 SOUTH MAIN STREET
WEST HARTFORD, CT 06110

The Architect:
(Name, legal status, address and other information)

BOSTWICK ARCHITECTS LLC
56 ARBOR STREET
HARTFORD, CT 06106

The Owner and Contractor agree as follows.

ADDITIONS AND DELETIONS: The author of this document has added information needed for its completion. The author may also have revised the text of the original AIA standard form. An *Additions and Deletions Report* that notes added information as well as revisions to the standard form text is available from the author and should be reviewed. A vertical line in the left margin of this document indicates where the author has added necessary information and where the author has added to or deleted from the original AIA text.

This document has important legal consequences. Consultation with an attorney is encouraged with respect to its completion or modification.

AIA Document A201™–2007, General Conditions of the Contract for Construction, is adopted in this document by reference. Do not use with other general conditions unless this document is modified.

ELECTRONIC COPYING of any portion of this AIA® Document to another electronic file is prohibited and constitutes a violation of copyright laws as set forth in the footer of this document.

AIA Document A101™ – 2007. Copyright © 1915, 1918, 1925, 1937, 1951, 1958, 1961, 1963, 1967, 1974, 1977, 1987, 1991, 1997 and 2007 by The American Institute of Architects. All rights reserved. WARNING: This AIA® Document is protected by U.S. Copyright Law and International Treaties. Unauthorized reproduction or distribution of this AIA® Document, or any portion of it, may result in severe civil and criminal penalties, and will be prosecuted to the maximum extent possible under the law. This draft was produced by AIA software at 12:29:05 on 11/07/2016 under Order No.6372817173_1 which expires on 10/15/2017, and is not for resale.
User Notes:
(1899193162)

TABLE OF ARTICLES

1 THE CONTRACT DOCUMENTS

2 THE WORK OF THIS CONTRACT

3 DATE OF COMMENCEMENT AND SUBSTANTIAL COMPLETION

4 CONTRACT SUM

5 PAYMENTS

6 DISPUTE RESOLUTION

7 TERMINATION OR SUSPENSION

8 MISCELLANEOUS PROVISIONS

9 ENUMERATION OF CONTRACT DOCUMENTS

10 INSURANCE AND BONDS

ARTICLE 1 THE CONTRACT DOCUMENTS

The Contract Documents consist of this Agreement, Conditions of the Contract (General, Supplementary and other Conditions), Drawings, Specifications, Addenda issued prior to execution of this Agreement, other documents listed in this Agreement and Modifications issued after execution of this Agreement, all of which form the Contract, and are as fully a part of the Contract as if attached to this Agreement or repeated herein. The Contract represents the entire and integrated agreement between the parties hereto and supersedes prior negotiations, representations or agreements, either written or oral. An enumeration of the Contract Documents, other than a Modification, appears in Article 9.

ARTICLE 2 THE WORK OF THIS CONTRACT

The Contractor shall fully execute the Work described in the Contract Documents, except as specifically indicated in the Contract Documents to be the responsibility of others.

ARTICLE 3 DATE OF COMMENCEMENT AND SUBSTANTIAL COMPLETION

§ 3.1 The date of commencement of the Work shall be the date of this Agreement unless a different date is stated below or provision is made for the date to be fixed in a notice to proceed issued by the Owner.
(Insert the date of commencement if it differs from the date of this Agreement or, if applicable, state that the date will be fixed in a notice to proceed.)

If, prior to the commencement of the Work, the Owner requires time to file mortgages and other security interests, the Owner's time requirement shall be as follows:

§ 3.2 The Contract Time shall be measured from the date of commencement.

§ 3.3 The Contractor shall achieve Substantial Completion of the entire Work not later than April 25, 2017 and Final Completion of the work not later than May 5, 2017.
(Insert number of calendar days. Alternatively, a calendar date may be used when coordinated with the date of commencement. If appropriate, insert requirements for earlier Substantial Completion of certain portions of the Work.)

AIA Document A101™ – 2007. Copyright © 1915, 1918, 1925, 1937, 1951, 1958, 1961, 1963, 1967, 1974, 1977, 1987, 1991, 1997 and 2007 by The American Institute of Architects. All rights reserved. WARNING: This AIA® Document is protected by U.S. Copyright Law and International Treaties. Unauthorized reproduction or distribution of this AIA® Document, or any portion of it, may result in severe civil and criminal penalties, and will be prosecuted to the maximum extent possible under the law. This draft was produced by AIA software at 12:29:05 on 11/07/2016 under Order No 6372817173_1 which expires on 10/15/2017, and is not for resale.
User Notes:
(1899193162)

Portion of Work	Substantial Completion Date

, subject to adjustments of this Contract Time as provided in the Contract Documents.
(Insert provisions, if any, for liquidated damages relating to failure to achieve Substantial Completion on time or for bonus payments for early completion of the Work.)

Liquidated damages in the amount of $300.00 per calendar day shall be assessed for the failure to achieve Substantial Completion of the work not later than April 25, 2017 and Final Completion of the work not later than May 5, 2017.

ARTICLE 4 CONTRACT SUM

§ 4.1 The Owner shall pay the Contractor the Contract Sum in current funds for the Contractor's performance of the Contract. The Contract Sum shall be ($), subject to additions and deductions as provided in the Contract Documents.

§ 4.2 The Contract Sum is based upon the following alternates, if any, which are described in the Contract Documents and are hereby accepted by the Owner:
(State the numbers or other identification of accepted alternates. If the bidding or proposal documents permit the Owner to accept other alternates subsequent to the execution of this Agreement, attach a schedule of such other alternates showing the amount for each and the date when that amount expires.)

§ 4.3 Unit prices, if any:
(Identify and state the unit price; state quantity limitations, if any, to which the unit price will be applicable.)

Item	Units and Limitations	Price Per Unit ($0.00)

§ 4.4 Allowances included in the Contract Sum, if any:
(Identify allowance and state exclusions, if any, from the allowance price.)

Item	Price

ARTICLE 5 PAYMENTS

§ 5.1 PROGRESS PAYMENTS

§ 5.1.1 Based upon Applications for Payment submitted to the Architect by the Contractor and Certificates for Payment issued by the Architect, the Owner shall make progress payments on account of the Contract Sum to the Contractor as provided below and elsewhere in the Contract Documents.

§ 5.1.2 The period covered by each Application for Payment shall be one calendar month ending on the last day of the month, or as follows:

§ 5.1.3 Provided that an Application for Payment is received by the Architect not later than the First day of a month, the Owner shall make payment of the certified amount to the Contractor not later than the first Friday after the Fifteenth day of the same month. If an Application for Payment is received by the Architect after the application date fixed above, payment shall be made by the Owner not later than Fifteen (15) days after the Architect receives the Application for Payment.
(Federal, state or local laws may require payment within a certain period of time.)

AIA Document A101™ – 2007. Copyright © 1915, 1918, 1925, 1937, 1951, 1958, 1961, 1963, 1967, 1974, 1977, 1987, 1991, 1997 and 2007 by The American Institute of Architects. All rights reserved. WARNING: This AIA® Document is protected by U.S. Copyright Law and International Treaties. Unauthorized reproduction or distribution of this AIA® Document, or any portion of it, may result in severe civil and criminal penalties, and will be prosecuted to the maximum extent possible under the law. This draft was produced by AIA software at 12:29:05 on 11/07/2016 under Order No.6372817173_1 which expires on 10/15/2017, and is not for resale.
User Notes:
(1899193162)

§ 5.1.4 Each Application for Payment shall be based on the most recent schedule of values submitted by the Contractor in accordance with the Contract Documents. The schedule of values shall allocate the entire Contract Sum among the various portions of the Work. The schedule of values shall be prepared in such form and supported by such data to substantiate its accuracy as the Architect may require. This schedule, unless objected to by the Architect, shall be used as a basis for reviewing the Contractor's Applications for Payment.

§ 5.1.5 Applications for Payment shall show the percentage of completion of each portion of the Work as of the end of the period covered by the Application for Payment.

§ 5.1.6 Subject to other provisions of the Contract Documents, the amount of each progress payment shall be computed as follows:

.1 Take that portion of the Contract Sum properly allocable to completed Work as determined by multiplying the percentage completion of each portion of the Work by the share of the Contract Sum allocated to that portion of the Work in the schedule of values, less retainage of Five percent (5.00 %). Pending final determination of cost to the Owner of changes in the Work, amounts not in dispute shall be included as provided in Section 7.3.9 of AIA Document A201™–2007, General Conditions of the Contract for Construction;

.2 Add that portion of the Contract Sum properly allocable to materials and equipment delivered and suitably stored at the site for subsequent incorporation in the completed construction (or, if approved in advance by the Owner, suitably stored off the site at a location agreed upon in writing), less retainage of Five percent (5.00 %);

.3 Subtract the aggregate of previous payments made by the Owner; and

.4 Subtract amounts, if any, for which the Architect has withheld or nullified a Certificate for Payment as provided in Section 9.5 of AIA Document A201–2007.

§ 5.1.7 The progress payment amount determined in accordance with Section 5.1.6 shall be further modified under the following circumstances:

.1 Add, upon Substantial Completion of the Work, a sum sufficient to increase the total payments to the full amount of the Contract Sum, less such amounts as the Architect shall determine for incomplete Work, retainage applicable to such work and unsettled claims; and
(Section 9.8.5 of AIA Document A201–2007 requires release of applicable retainage upon Substantial Completion of Work with consent of surety, if any.)

.2 Add, if final completion of the Work is thereafter materially delayed through no fault of the Contractor, any additional amounts payable in accordance with Section 9.10.3 of AIA Document A201–2007.

§ 5.1.8 Reduction or limitation of retainage, if any, shall be as follows:
(If it is intended, prior to Substantial Completion of the entire Work, to reduce or limit the retainage resulting from the percentages inserted in Sections 5.1.6.1 and 5.1.6.2 above, and this is not explained elsewhere in the Contract Documents, insert here provisions for such reduction or limitation.)

§ 5.1.9 Except with the Owner's prior approval, the Contractor shall not make advance payments to suppliers for materials or equipment which have not been delivered and stored at the site.

§ 5.2 FINAL PAYMENT

§ 5.2.1 Final payment, constituting the entire unpaid balance of the Contract Sum, shall be made by the Owner to the Contractor when

.1 the Contractor has fully performed the Contract except for the Contractor's responsibility to correct Work as provided in Section 12.2.2 of AIA Document A201–2007, and to satisfy other requirements, if any, which extend beyond final payment; and

.2 a final Certificate for Payment has been issued by the Architect.

§ 5.2.2 The Owner's final payment to the Contractor shall be made no later than 30 days after the issuance of the Architect's final Certificate for Payment, or as follows:

AIA Document A101™ – 2007. Copyright © 1915, 1918, 1925, 1937, 1951, 1958, 1961, 1963, 1967, 1974, 1977, 1987, 1991, 1997 and 2007 by The American Institute of Architects. All rights reserved. WARNING: This AIA® Document is protected by U.S. Copyright Law and International Treaties. Unauthorized reproduction or distribution of this AIA® Document, or any portion of it, may result in severe civil and criminal penalties, and will be prosecuted to the maximum extent possible under the law. This draft was produced by AIA software at 12:29:05 on 11/07/2016 under Order No.6372817173_1 which expires on 10/15/2017, and is not for resale.
User Notes:

(1899193162)

ARTICLE 6 DISPUTE RESOLUTION

§ 6.1 INITIAL DECISION MAKER

The Architect will serve as Initial Decision Maker pursuant to Section 15.2 of AIA Document A201–2007, unless the parties appoint below another individual, not a party to this Agreement, to serve as Initial Decision Maker.
(If the parties mutually agree, insert the name, address and other contact information of the Initial Decision Maker, if other than the Architect.)

§ 6.2 BINDING DISPUTE RESOLUTION

For any Claim subject to, but not resolved by, mediation pursuant to Section 15.3 of AIA Document A201–2007, the method of binding dispute resolution shall be as follows:
(Check the appropriate box. If the Owner and Contractor do not select a method of binding dispute resolution below, or do not subsequently agree in writing to a binding dispute resolution method other than litigation, Claims will be resolved by litigation in a court of competent jurisdiction.)

[X] Arbitration pursuant to Section 15.4 of AIA Document A201–2007

[ ] Litigation in a court of competent jurisdiction

[ ] Other *(Specify)*

ARTICLE 7 TERMINATION OR SUSPENSION

§ 7.1 The Contract may be terminated by the Owner or the Contractor as provided in Article 14 of AIA Document A201–2007.

§ 7.2 The Work may be suspended by the Owner as provided in Article 14 of AIA Document A201–2007.

ARTICLE 8 MISCELLANEOUS PROVISIONS

§ 8.1 Where reference is made in this Agreement to a provision of AIA Document A201–2007 or another Contract Document, the reference refers to that provision as amended or supplemented by other provisions of the Contract Documents.

§ 8.2 Payments due and unpaid under the Contract shall bear interest from the date payment is due at the rate stated below, or in the absence thereof, at the legal rate prevailing from time to time at the place where the Project is located.
(Insert rate of interest agreed upon, if any.)

0.00 % per annum

§ 8.3 The Owner's representative:
(Name, address and other information)

WILLIAM S. PHIBBS, CAPITAL PROJECTS MANAGER, 860-561-7523
TOWN OF WEST HARTFORD
50 SOUTH MAIN STREET
WEST HARTFORD, CT 06107

§ 8.4 The Contractor's representative:
(Name, address and other information)

AIA Document A101™ – 2007. Copyright © 1915, 1918, 1925, 1937, 1951, 1958, 1961, 1963, 1967, 1974, 1977, 1987, 1991, 1997 and 2007 by The American Institute of Architects. All rights reserved. WARNING: This AIA® Document is protected by U.S. Copyright Law and International Treaties. Unauthorized reproduction or distribution of this AIA® Document, or any portion of it, may result in severe civil and criminal penalties, and will be prosecuted to the maximum extent possible under the law. This draft was produced by AIA software at 12:29:05 on 11/07/2016 under Order No.6372817173_1 which expires on 10/15/2017, and is not for resale.
User Notes:
(1899193162)

§ 8.5 Neither the Owner's nor the Contractor's representative shall be changed without ten days written notice to the other party.

§ 8.6 Other provisions:

ARTICLE 9 ENUMERATION OF CONTRACT DOCUMENTS

§ 9.1 The Contract Documents, except for Modifications issued after execution of this Agreement, are enumerated in the sections below.

§ 9.1.1 The Agreement is this executed AIA Document A101–2007, Standard Form of Agreement Between Owner and Contractor.

§ 9.1.2 The General Conditions are AIA Document A201–2007, General Conditions of the Contract for Construction.

§ 9.1.3 The Supplementary and other Conditions of the Contract are those contained in the Project Specification Document BID#6543F and are as follows:

Document	Title	Date	Pages

INSTRUCTIONS TO BIDDERS
00101 PROJECT INFORMATION PAGE
00102 TABLE OF CONTENTS
00103 PROJECT NARRATIVE
00104 LIST OF DRAWINGS
00105 LOCATION MAP
00106 WORK RULES
00107 NOISE ORDINANCE
BIDDING REQUIREMENTS AND FORMS
00201 INVITATION TO BID
00202 INSTRUCTIONS TO BIDDERS - AIA DOCUMENT A-701 - 1997
00203 SUPPLEMENTARY INSTRUCTIONS TO BIDDERS
00204 BID FORMS
00205 SAMPLE AGREEMENT FORM
LABOR REQUIREMENTS
00303 CONTRACT LABOR RATES
GENERAL CONDITIONS
00401 GENERAL CONDITIONS - AIA DOCUMENT A-201
00402 SUPPLEMENTARY GENERAL CONDITIONS

§ 9.1.4 The Specifications are those contained in the Project Specification Document BID#6543F as in Section 9.1.3 and are as follows:

(Either list the Specifications here or refer to an exhibit attached to this Agreement.)

AIA Document A101™ – 2007. Copyright © 1915, 1918, 1925, 1937, 1951, 1958, 1961, 1963, 1967, 1974, 1977, 1987, 1991, 1997 and 2007 by The American Institute of Architects. All rights reserved. WARNING: This AIA® Document is protected by U.S. Copyright Law and International Treaties. Unauthorized reproduction or distribution of this AIA® Document, or any portion of it, may result in severe civil and criminal penalties, and will be prosecuted to the maximum extent possible under the law. This draft was produced by AIA software at 12:29:05 on 11/07/2016 under Order No.6372817173_1 which expires on 10/15/2017, and is not for resale.
User Notes:

(1899193162)

Section	Title	Date	Pages

DIVISION 1 GENERAL REQUIREMENTS

Section 01000 SPECIFICATION FORMAT
Section 01010 SUMMARY OF WORK
Section 01019 CONTRACT CONSIDERATIONS
Section 01026 APPLICATION FOR PAYMENT
Section 01039 COORDINATION AND MEETINGS
Section 01045 CUTTING AND PATCHING
Section 01060 REGULATORY REQUIREMENTS
Section 01090 REFERENCES
Section 01120 ALTERNATE PROJECT PROCEDURES
Section 01200 PROJECT MEETINGS
Section 01300 SUBMITTALS
Section 01340 SHOP DRAWINGS AND SAMPLES
Section 01400 QUALITY CONTROL
Section 01410 SPECIAL INSPECTIONS AND STRUCTURAL TESTING
Section 01500 CONSTRUCTION FACILITIES AND TEMPORARY CONTROLS
Section 01600 MATERIALS AND EQUIPMENT
Section 01630 PRODUCT OPTIONS AND SUBSTITUTIONS
Section 01700 CONTRACT CLOSEOUT
Section 01720 PROJECT RECORD
Section 01730 HVAC OPERATION TRAINING MANUAL
Section 01740 GUARANTEES, WARRANTIES, BONDS & MAINTENANCE CONTRACTS
Section 01800 GENERAL STANDARDS

DIVISION 2 SITEWORK – ON DRAWINGS

DIVISION 3 CONCRETE

Section 03300 CAST-IN-PLACE CONCRETE

DIVISION 4 MASONRY – NOT USED

DIVISION 5 METAL – ALSO ON DRAWINGS

Section 05740 RAILING SYSTEM – INSTALLATION GUIDE

DIVISION 6 WOOD AND PLASTIC

Section 06100 ROUGH CARPENTRY
Section 06200 FINISH CARPENTRY

DIVISION 7 THERMAL AND MOISTURE PROTECTION

Section 07270 FIRESTOPPING
Section 07311 FIBERGLASS SHINGLES
Section 07620 SHEET METAL AND FLASHING TRIM
Section 07920 JOINT SEALERS

DIVISION 8 DOORS AND WINDOWS – NOT USED

DIVISION 9 FINISHES

Section 09705 POURED EPOXY FLOOR SYSTEM - ACCELERA HC SYSTEM
Section 09900 PAINTING

DRAFT

AIA Document A101™ – 2007. Copyright © 1915, 1918, 1925, 1937, 1951, 1958, 1961, 1963, 1967, 1974, 1977, 1987, 1991, 1997 and 2007 by The American Institute of Architects. All rights reserved. WARNING: This AIA® Document is protected by U.S. Copyright Law and International Treaties. Unauthorized reproduction or distribution of this AIA® Document, or any portion of it, may result in severe civil and criminal penalties, and will be prosecuted to the maximum extent possible under the law. This draft was produced by AIA software at 12 29 05 on 11/07/2016 under Order No.6372817173_1 which expires on 10/15/2017, and is not for resale.
User Notes:
(1899193162)

DIVISION 10	**SPECIALTIES – NOT USED**
DIVISION 11	**EQUIPMENT– NOT USED**
DIVISION 12	**FURNISHING – NOT USED**
DIVISION 13	**SPECIAL CONSTRUCTION – NOT USED**
DIVISION 14	**CONVEYING SYSTEMS – NOT USED**
DIVISION 15	**MECHANICAL – NOT USED**
DIVISION 16	**ELECTRICAL – ON DRAWINGS**

§ 9.1.5 The Drawings:
(Either list the Drawings here or refer to an exhibit attached to this Agreement.)

Number	Title	Date

COVER SHEET	
CIVIL	
1 OF 2	TOPOGRAPHIC SURVEY SHOWING EXISTING CONDITIONS
2 OF 2	SITE GRADING & UTILITIES PLAN
ARCHITECTURAL	
AI - 0.1	INFORMATION SHEET, MOUNTING HEIGHTS, SYMBOLS. DRAWING LIST
AC - 1.0	CODE INFORMATION
AD - 1.0	DEMOLITION FLOOR PLAN AND AWNING ROOF PLAN
AD - 2.0	DEMOLITION EXTERIOR ELEVATIONS
A - 1.0	UPPER AND LOWER LEVEL FLOOR PLANS
A - 2.0	EXTERIOR ELEVATIONS AND DETAILS
STRUCTURAL	
S – 1.0	DECK FRAMING PLAN, DETAILS AND GENERAL NOTES
S – 2.0	DECK RAILING PLAN AND DETAILS
FIRE PROTECTION	
	NOT APPLICABLE
PLUMBING	
	NOT APPLICABLE
MECHANICAL	
	NOT APPLICABLE
ELECTRICAL	
E - 1.0	ELECTRICAL PLANS
E - 2.0	ELECTRICAL SPECIFICATIONS

§ 9.1.6 The Addenda, if any:

Number	Date	Pages

Portions of Addenda relating to bidding requirements are not part of the Contract Documents unless the bidding requirements are also enumerated in this Article 9.

§ 9.1.7 Additional documents, if any, forming part of the Contract Documents:

.1 AIA Document E201™–2007, Digital Data Protocol Exhibit, if completed by the parties, or the following:

.2 Other documents, if any, listed below:

AIA Document A101™ – 2007. Copyright © 1915, 1918, 1925, 1937, 1951, 1958, 1961, 1963, 1967, 1974, 1977, 1987, 1991, 1997 and 2007 by The American Institute of Architects. All rights reserved. WARNING: This AIA® Document is protected by U.S. Copyright Law and International Treaties. Unauthorized reproduction or distribution of this AIA® Document, or any portion of it, may result in severe civil and criminal penalties, and will be prosecuted to the maximum extent possible under the law. This draft was produced by AIA software at 12:29:05 on 11/07/2016 under Order No.6372817173_1 which expires on 10/15/2017, and is not for resale.
User Notes:
(1899193162)

(List here any additional documents that are intended to form part of the Contract Documents. AIA Document A201–2007 provides that bidding requirements such as advertisement or invitation to bid, Instructions to Bidders, sample forms and the Contractor's bid are not part of the Contract Documents unless enumerated in this Agreement. They should be listed here only if intended to be part of the Contract Documents.)

Contractors bid response attached herein.

ARTICLE 10 INSURANCE AND BONDS

The Contractor shall purchase and maintain insurance and provide bonds as set forth in Article 11 of AIA Document A201–2007.

(State bonding requirements, if any, and limits of liability for insurance required in Article 11 of AIA Document A201–2007.)

Type of insurance or bond	Limit of liability or bond amount ($0.00)

This Agreement entered into as of the day and year first written above.

OWNER *(Signature)*	**CONTRACTOR** *(Signature)*
Peter Privitera, Purchasing Agent Town of West Hartford	
(Printed name and title)	*(Printed name and title)*

DRAFT

AIA Document A101™ – 2007. Copyright © 1915, 1918, 1925, 1937, 1951, 1958, 1961, 1963, 1967, 1974, 1977, 1987, 1991, 1997 and 2007 by The American Institute of Architects. All rights reserved. WARNING: This AIA® Document is protected by U.S. Copyright Law and International Treaties. Unauthorized reproduction or distribution of this AIA® Document, or any portion of it, may result in severe civil and criminal penalties, and will be prosecuted to the maximum extent possible under the law. This draft was produced by AIA software at 12:29:05 on 11/07/2016 under Order No.6372817173_1 which expires on 10/15/2017, and is not for resale.
User Notes:

(1899193162)

AIA® Document A201™ – 2007

General Conditions of the Contract for Construction

for the following PROJECT:
(Name and location or address)
DECK RENOVATION AND EXPANSION OF ROCKLEDGE CLUBHOUSE BID 6543F
289 SOUTH MAIN STREET
WEST HARTFORD, CT 06110

THE OWNER:
(Name, legal status and address)
TOWN OF WEST HARTFORD
50 SOUTH MAIN STREET
WEST HARTFORD, CT 06107

THE ARCHITECT:
(Name, legal status and address)
BOSTWICK ARCHITECTS LLC
56 ARBOR STREET
HARTFORD, CT 06106

ADDITIONS AND DELETIONS:
The author of this document has added information needed for its completion. The author may also have revised the text of the original AIA standard form. An *Additions and Deletions Report* that notes added information as well as revisions to the standard form text is available from the author and should be reviewed. A vertical line in the left margin of this document indicates where the author has added necessary information and where the author has added to or deleted from the original AIA text.

This document has important legal consequences. Consultation with an attorney is encouraged with respect to its completion or modification.

TABLE OF ARTICLES

1 GENERAL PROVISIONS

2 OWNER

3 CONTRACTOR

4 ARCHITECT

5 SUBCONTRACTORS

6 CONSTRUCTION BY OWNER OR BY SEPARATE CONTRACTORS

7 CHANGES IN THE WORK

8 TIME

9 PAYMENTS AND COMPLETION

10 PROTECTION OF PERSONS AND PROPERTY

11 INSURANCE AND BONDS

12 UNCOVERING AND CORRECTION OF WORK

13 MISCELLANEOUS PROVISIONS

14 TERMINATION OR SUSPENSION OF THE CONTRACT

15 CLAIMS AND DISPUTES

Init.
/

AIA Document A201™ – 2007. Copyright © 1911, 1915, 1918, 1925, 1937, 1951, 1958, 1961, 1963, 1966, 1970, 1976, 1987, 1997 and 2007 by The American Institute of Architects. All rights reserved. WARNING: This AIA® Document is protected by U.S. Copyright Law and International Treaties. Unauthorized reproduction or distribution of this AIA® Document, or any portion of it, may result in severe civil and criminal penalties, and will be prosecuted to the maximum extent possible under the law. This document was produced by AIA software at 15:59:05 on 10/27/2016 under Order No.6372817173_1 which expires on 10/15/2017, and is not for resale.
User Notes:

INDEX
(Topics and numbers in bold are section headings.)

Acceptance of Nonconforming Work
9.6.6, 9.9.3, **12.3**
Acceptance of Work
9.6.6, 9.8.2, 9.9.3, 9.10.1, 9.10.3, 12.3
Access to Work
3.16, 6.2.1, 12.1
Accident Prevention
10
Acts and Omissions
3.2, 3.3.2, 3.12.8, 3.18, 4.2.3, 8.3.1, 9.5.1, 10.2.5, 10.2.8, 13.4.2, 13.7, 14.1, 15.2
Addenda
1.1.1, 3.11.1
Additional Costs, Claims for
3.7.4, 3.7.5, 6.1.1, 7.3.7.5, 10.3, 15.1.4
Additional Inspections and Testing
9.4.2, 9.8.3, 12.2.1, **13.5**
Additional Insured
11.1.4
Additional Time, Claims for
3.2.4, 3.7.4, 3.7.5, 3.10.2, 8.3.2, **15.1.5**
Administration of the Contract
3.1.3, **4.2**, 9.4, 9.5
Advertisement or Invitation to Bid
1.1.1
Aesthetic Effect
4.2.13
Allowances
3.8, 7.3.8
All-risk Insurance
11.3.1, 11.3.1.1
Applications for Payment
4.2.5, 7.3.9, 9.2, **9.3**, 9.4, 9.5.1, 9.6.3, 9.7, 9.10, 11.1.3
Approvals
2.1.1, 2.2.2, 2.4, 3.1.3, 3.10.2, 3.12.8, 3.12.9, 3.12.10, 4.2.7, 9.3.2, 13.5.1
Arbitration
8.3.1, 11.3.10, 13.1.1, 15.3.2, **15.4**
ARCHITECT
4
Architect, Definition of
4.1.1
Architect, Extent of Authority
2.4.1, 3.12.7, 4.1, 4.2, 5.2, 6.3, 7.1.2, 7.3.7, 7.4, 9.2, 9.3.1, 9.4, 9.5, 9.6.3, 9.8, 9.10.1, 9.10.3, 12.1, 12.2.1, 13.5.1, 13.5.2, 14.2.2, 14.2.4, 15.1.3, 15.2.1
Architect, Limitations of Authority and Responsibility
2.1.1, 3.12.4, 3.12.8, 3.12.10, 4.1.2, 4.2.1, 4.2.2, 4.2.3, 4.2.6, 4.2.7, 4.2.10, 4.2.12, 4.2.13, 5.2.1, 7.4, 9.4.2, 9.5.3, 9.6.4, 15.1.3, 15.2
Architect's Additional Services and Expenses
2.4.1, 11.3.1.1, 12.2.1, 13.5.2, 13.5.3, 14.2.4
Architect's Administration of the Contract
3.1.3, 4.2, 3.7.4, 15.2, 9.4.1, 9.5
Architect's Approvals
2.4.1, 3.1.3, 3.5, 3.10.2, 4.2.7
Architect's Authority to Reject Work
3.5, 4.2.6, 12.1.2, 12.2.1
Architect's Copyright
1.1.7, **1.5**
Architect's Decisions
3.7.4, 4.2.6, 4.2.7, 4.2.11, 4.2.12, 4.2.13, 4.2.14, 6.3, 7.3.7, 7.3.9, 8.1.3, 8.3.1, 9.2, 9.4.1, 9.5, 9.8.4, 9.9.1, 13.5.2, 15.2, 15.3
Architect's Inspections
3.7.4, 4.2.2, 4.2.9, 9.4.2, 9.8.3, 9.9.2, 9.10.1, 13.5
Architect's Instructions
3.2.4, 3.3.1, 4.2.6, 4.2.7, 13.5.2
Architect's Interpretations
4.2.11, 4.2.12
Architect's Project Representative
4.2.10
Architect's Relationship with Contractor
1.1.2, 1.5, 3.1.3, 3.2.2, 3.2.3, 3.2.4, 3.3.1, 3.4.2, 3.5, 3.7.4, 3.7.5, 3.9.2, 3.9.3, 3.10, 3.11, 3.12, 3.16, 3.18, 4.1.2, 4.1.3, 4.2, 5.2, 6.2.2, 7, 8.3.1, 9.2, 9.3, 9.4, 9.5, 9.7, 9.8, 9.9, 10.2.6, 10.3, 11.3.7, 12, 13.4.2, 13.5, 15.2
Architect's Relationship with Subcontractors
1.1.2, 4.2.3, 4.2.4, 4.2.6, 9.6.3, 9.6.4, 11.3.7
Architect's Representations
9.4.2, 9.5.1, 9.10.1
Architect's Site Visits
3.7.4, 4.2.2, 4.2.9, 9.4.2, 9.5.1, 9.9.2, 9.10.1, 13.5
Asbestos
10.3.1
Attorneys' Fees
3.18.1, 9.10.2, 10.3.3
Award of Separate Contracts
6.1.1, 6.1.2
Award of Subcontracts and Other Contracts for Portions of the Work
5.2
Basic Definitions
1.1
Bidding Requirements
1.1.1, 5.2.1, 11.4.1
Binding Dispute Resolution
9.7, 11.3.9, 11.3.10, 13.1.1, 15.2.5, 15.2.6.1, 15.3.1, 15.3.2, 15.4.1
Boiler and Machinery Insurance
11.3.2
Bonds, Lien
7.3.7.4, 9.10.2, 9.10.3
Bonds, Performance, and Payment
7.3.7.4, 9.6.7, 9.10.3, 11.3.9, **11.4**

Init.

AIA Document A201™ – 2007. Copyright © 1911, 1915, 1918, 1925, 1937, 1951, 1958, 1961, 1963, 1966, 1970, 1976, 1987, 1997 and 2007 by The American Institute of Architects. All rights reserved. WARNING: This AIA® Document is protected by U.S. Copyright Law and International Treaties. Unauthorized reproduction or distribution of this AIA® Document, or any portion of it, may result in severe civil and criminal penalties, and will be prosecuted to the maximum extent possible under the law. This document was produced by AIA software at 15:59:05 on 10/27/2016 under Order No.6372817173_1 which expires on 10/15/2017, and is not for resale.
User Notes:

Building Permit
3.7.1
Capitalization
1.3
Certificate of Substantial Completion
9.8.3, 9.8.4, 9.8.5
Certificates for Payment
4.2.1, 4.2.5, 4.2.9, 9.3.3, **9.4**, 9.5, 9.6.1, 9.6.6, 9.7, 9.10.1, 9.10.3, 14.1.1.3, 14.2.4, 15.1.3
Certificates of Inspection, Testing or Approval
13.5.4
Certificates of Insurance
9.10.2, 11.1.3
Change Orders
1.1.1, 2.4.1, 3.4.2, 3.7.4, 3.8.2.3, 3.11.1, 3.12.8, 4.2.8, 5.2.3, 7.1.2, 7.1.3, **7.2**, 7.3.2, 7.3.6, 7.3.9, 7.3.10, 8.3.1, 9.3.1.1, 9.10.3, 10.3.2, 11.3.1.2, 11.3.4, 11.3.9, 12.1.2, 15.1.3
Change Orders, Definition of
7.2.1
CHANGES IN THE WORK
2.2.1, 3.11, 4.2.8, **7**, 7.2.1, 7.3.1, 7.4, 8.3.1, 9.3.1.1, 11.3.9
Claims, Definition of
15.1.1
CLAIMS AND DISPUTES
3.2.4, 6.1.1, 6.3, 7.3.9, 9.3.3, 9.10.4, 10.3.3, **15**, 15.4
Claims and Timely Assertion of Claims
15.4.1
Claims for Additional Cost
3.2.4, 3.7.4, 6.1.1, 7.3.9, 10.3.2, **15.1.4**
Claims for Additional Time
3.2.4, 3.7.46.1.1, 8.3.2, 10.3.2, **15.1.5**
Concealed or Unknown Conditions, Claims for
3.7.4
Claims for Damages
3.2.4, 3.18, 6.1.1, 8.3.3, 9.5.1, 9.6.7, 10.3.3, 11.1.1, 11.3.5, 11.3.7, 14.1.3, 14.2.4, 15.1.6
Claims Subject to Arbitration
15.3.1, 15.4.1
Cleaning Up
3.15, 6.3
Commencement of the Work, Conditions Relating to
2.2.1, 3.2.2, 3.4.1, 3.7.1, 3.10.1, 3.12.6, 5.2.1, 5.2.3, 6.2.2, 8.1.2, 8.2.2, 8.3.1, 11.1, 11.3.1, 11.3.6, 11.4.1, 15.1.4
Commencement of the Work, Definition of
8.1.2
Communications Facilitating Contract Administration
3.9.1, **4.2.4**
Completion, Conditions Relating to
3.4.1, 3.11, 3.15, 4.2.2, 4.2.9, 8.2, 9.4.2, 9.8, 9.9.1, 9.10, 12.2, 13.7, 14.1.2
COMPLETION, PAYMENTS AND
9
Completion, Substantial
4.2.9, 8.1.1, 8.1.3, 8.2.3, 9.4.2, 9.8, 9.9.1, 9.10.3, 12.2, 13.7
Compliance with Laws
1.6.1, 3.2.3, 3.6, 3.7, 3.12.10, 3.13, 4.1.1, 9.6.4, 10.2.2, 11.1, 11.3, 13.1, 13.4, 13.5.1, 13.5.2, 13.6, 14.1.1, 14.2.1.3, 15.2.8, 15.4.2, 15.4.3
Concealed or Unknown Conditions
3.7.4, 4.2.8, 8.3.1, 10.3
Conditions of the Contract
1.1.1, 6.1.1, 6.1.4
Consent, Written
3.4.2, 3.7.4, 3.12.8, 3.14.2, 4.1.2, 9.3.2, 9.8.5, 9.9.1, 9.10.2, 9.10.3, 11.3.1, 13.2, 13.4.2, 15.4.4.2
Consolidation or Joinder
15.4.4
CONSTRUCTION BY OWNER OR BY SEPARATE CONTRACTORS
1.1.4, **6**
Construction Change Directive, Definition of
7.3.1
Construction Change Directives
1.1.1, 3.4.2, 3.12.8, 4.2.8, 7.1.1, 7.1.2, 7.1.3, **7.3**, 9.3.1.1
Construction Schedules, Contractor's
3.10, 3.12.1, 3.12.2, 6.1.3, 15.1.5.2
Contingent Assignment of Subcontracts
5.4, 14.2.2.2
Continuing Contract Performance
15.1.3
Contract, Definition of
1.1.2
CONTRACT, TERMINATION OR SUSPENSION OF THE
5.4.1.1, 11.3.9, **14**
Contract Administration
3.1.3, **4**, 9.4, 9.5
Contract Award and Execution, Conditions Relating to
3.7.1, 3.10, 5.2, 6.1, 11.1.3, 11.3.6, 11.4.1
Contract Documents, Copies Furnished and Use of
1.5.2, 2.2.5, 5.3
Contract Documents, Definition of
1.1.1
Contract Sum
3.7.4, 3.8, 5.2.3, 7.2, 7.3, 7.4, **9.1**, 9.4.2, 9.5.1.4, 9.6.7, 9.7, 10.3.2, 11.3.1, 14.2.4, 14.3.2, 15.1.4, 15.2.5
Contract Sum, Definition of
9.1
Contract Time
3.7.4, 3.7.5, 3.10.2, 5.2.3, 7.2.1.3, 7.3.1, 7.3.5, 7.4, 8.1.1, 8.2.1, 8.3.1, 9.5.1, 9.7, 10.3.2, 12.1.1, 14.3.2, 15.1.5.1, 15.2.5
Contract Time, Definition of
8.1.1

Init.
/
AIA Document A201™ – 2007. Copyright © 1911, 1915, 1918, 1925, 1937, 1951, 1958, 1961, 1963, 1966, 1970, 1976, 1987, 1997 and 2007 by The American Institute of Architects. All rights reserved. WARNING: This AIA® Document is protected by U.S. Copyright Law and International Treaties. Unauthorized reproduction or distribution of this AIA® Document, or any portion of it, may result in severe civil and criminal penalties, and will be prosecuted to the maximum extent possible under the law. This document was produced by AIA software at 15:59:05 on 10/27/2016 under Order No.6372817173_1 which expires on 10/15/2017, and is not for resale.
User Notes:
(1230662987)

CONTRACTOR
3
Contractor, Definition of
3.1, 6.1.2
Contractor's Construction Schedules
3.10, 3.12.1, 3.12.2, 6.1.3, 15.1.5.2
Contractor's Employees
3.3.2, 3.4.3, 3.8.1, 3.9, 3.18.2, 4.2.3, 4.2.6, 10.2, 10.3, 11.1.1, 11.3.7, 14.1, 14.2.1.1
Contractor's Liability Insurance
11.1
Contractor's Relationship with Separate Contractors and Owner's Forces
3.12.5, 3.14.2, 4.2.4, 6, 11.3.7, 12.1.2, 12.2.4
Contractor's Relationship with Subcontractors
1.2.2, 3.3.2, 3.18.1, 3.18.2, 5, 9.6.2, 9.6.7, 9.10.2, 11.3.1.2, 11.3.7, 11.3.8
Contractor's Relationship with the Architect
1.1.2, 1.5, 3.1.3, 3.2.2, 3.2.3, 3.2.4, 3.3.1, 3.4.2, 3.5, 3.7.4, 3.10, 3.11, 3.12, 3.16, 3.18, 4.1.3, 4.2, 5.2, 6.2.2, 7, 8.3.1, 9.2, 9.3, 9.4, 9.5, 9.7, 9.8, 9.9, 10.2.6, 10.3, 11.3.7, 12, 13.5, 15.1.2, 15.2.1
Contractor's Representations
3.2.1, 3.2.2, 3.5, 3.12.6, 6.2.2, 8.2.1, 9.3.3, 9.8.2
Contractor's Responsibility for Those Performing the Work
3.3.2, 3.18, 5.3.1, 6.1.3, 6.2, 9.5.1, 10.2.8
Contractor's Review of Contract Documents
3.2
Contractor's Right to Stop the Work
9.7
Contractor's Right to Terminate the Contract
14.1, 15.1.6
Contractor's Submittals
3.10, 3.11, 3.12.4, 4.2.7, 5.2.1, 5.2.3, 9.2, 9.3, 9.8.2, 9.8.3, 9.9.1, 9.10.2, 9.10.3, 11.1.3, 11.4.2
Contractor's Superintendent
3.9, 10.2.6
Contractor's Supervision and Construction Procedures
1.2.2, 3.3, 3.4, 3.12.10, 4.2.2, 4.2.7, 6.1.3, 6.2.4, 7.1.3, 7.3.5, 7.3.7, 8.2, 10, 12, 14, 15.1.3
Contractual Liability Insurance
11.1.1.8, 11.2
Coordination and Correlation
1.2, 3.2.1, 3.3.1, 3.10, 3.12.6, 6.1.3, 6.2.1
Copies Furnished of Drawings and Specifications
1.5, 2.2.5, 3.11
Copyrights
1.5, **3.17**
Correction of Work
2.3, 2.4, 3.7.3, 9.4.2, 9.8.2, 9.8.3, 9.9.1, 12.1.2, **12.2**
Correlation and Intent of the Contract Documents
1.2
Cost, Definition of
7.3.7
Costs
2.4.1, 3.2.4, 3.7.3, 3.8.2, 3.15.2, 5.4.2, 6.1.1, 6.2.3, 7.3.3.3, 7.3.7, 7.3.8, 7.3.9, 9.10.2, 10.3.2, 10.3.6, 11.3, 12.1.2, 12.2.1, 12.2.4, 13.5, 14
Cutting and Patching
3.14, 6.2.5
Damage to Construction of Owner or Separate Contractors
3.14.2, 6.2.4, 10.2.1.2, 10.2.5, 10.4, 11.1.1, 11.3, 12.2.4
Damage to the Work
3.14.2, 9.9.1, 10.2.1.2, 10.2.5, 10.4.1, 11.3.1, 12.2.4
Damages, Claims for
3.2.4, 3.18, 6.1.1, 8.3.3, 9.5.1, 9.6.7, 10.3.3, 11.1.1, 11.3.5, 11.3.7, 14.1.3, 14.2.4, 15.1.6
Damages for Delay
6.1.1, 8.3.3, 9.5.1.6, 9.7, 10.3.2
Date of Commencement of the Work, Definition of
8.1.2
Date of Substantial Completion, Definition of
8.1.3
Day, Definition of
8.1.4
Decisions of the Architect
3.7.4, 4.2.6, 4.2.7, 4.2.11, 4.2.12, 4.2.13, 15.2, 6.3, 7.3.7, 7.3.9, 8.1.3, 8.3.1, 9.2, 9.4, 9.5.1, 9.8.4, 9.9.1, 13.5.2, 14.2.2, 14.2.4, 15.1, 15.2
Decisions to Withhold Certification
9.4.1, **9.5**, 9.7, 14.1.1.3
Defective or Nonconforming Work, Acceptance, Rejection and Correction of
2.3.1, 2.4.1, 3.5, 4.2.6, 6.2.5, 9.5.1, 9.5.2, 9.6.6, 9.8.2, 9.9.3, 9.10.4, 12.2.1
Definitions
1.1, 2.1.1, 3.1.1, 3.5, 3.12.1, 3.12.2, 3.12.3, 4.1.1, 15.1.1, 5.1, 6.1.2, 7.2.1, 7.3.1, 8.1, 9.1, 9.8.1
Delays and Extensions of Time
3.2, 3.7.4, 5.2.3, 7.2.1, 7.3.1, 7.4, **8.3**, 9.5.1, 9.7, 10.3.2, 10.4.1, 14.3.2, 15.1.5, 15.2.5
Disputes
6.3, 7.3.9, 15.1, 15.2
Documents and Samples at the Site
3.11
Drawings, Definition of
1.1.5
Drawings and Specifications, Use and Ownership of
3.11
Effective Date of Insurance
8.2.2, 11.1.2
Emergencies
10.4, 14.1.1.2, 15.1.4
Employees, Contractor's
3.3.2, 3.4.3, 3.8.1, 3.9, 3.18.2, 4.2.3, 4.2.6, 10.2, 10.3.3, 11.1.1, 11.3.7, 14.1, 14.2.1.1

Init.
/
AIA Document A201™ – 2007. Copyright © 1911, 1915, 1918, 1925, 1937, 1951, 1958, 1961, 1963, 1966, 1970, 1976, 1987, 1997 and 2007 by The American Institute of Architects. All rights reserved. WARNING: This AIA® Document is protected by U.S. Copyright Law and International Treaties. Unauthorized reproduction or distribution of this AIA® Document, or any portion of it, may result in severe civil and criminal penalties, and will be prosecuted to the maximum extent possible under the law. This document was produced by AIA software at 15:59:05 on 10/27/2016 under Order No.6372817173_1 which expires on 10/15/2017, and is not for resale.
User Notes:
(1230662987)

Equipment, Labor, Materials or
1.1.3, 1.1.6, 3.4, 3.5, 3.8.2, 3.8.3, 3.12, 3.13.1, 3.15.1, 4.2.6, 4.2.7, 5.2.1, 6.2.1, 7.3.7, 9.3.2, 9.3.3, 9.5.1.3, 9.10.2, 10.2.1, 10.2.4, 14.2.1.1, 14.2.1.2
Execution and Progress of the Work
1.1.3, 1.2.1, 1.2.2, 2.2.3, 2.2.5, 3.1, 3.3.1, 3.4.1, 3.5, 3.7.1, 3.10.1, 3.12, 3.14, 4.2, 6.2.2, 7.1.3, 7.3.5, 8.2, 9.5.1, 9.9.1, 10.2, 10.3, 12.2, 14.2, 14.3.1, 15.1.3
Extensions of Time
3.2.4, 3.7.4, 5.2.3, 7.2.1, 7.3, 7.4, 9.5.1, 9.7, 10.3.2, 10.4.1, 14.3, 15.1.5, 15.2.5
Failure of Payment
9.5.1.3, **9.7**, 9.10.2, 13.6, 14.1.1.3, 14.2.1.2
Faulty Work
(See Defective or Nonconforming Work)
Final Completion and Final Payment
4.2.1, 4.2.9, 9.8.2, **9.10**, 11.1.2, 11.1.3, 11.3.1, 11.3.5, 12.3.1, 14.2.4, 14.4.3
Financial Arrangements, Owner's
2.2.1, 13.2.2, 14.1.1.4
Fire and Extended Coverage Insurance
11.3.1.1
GENERAL PROVISIONS
1
Governing Law
13.1
Guarantees (See Warranty)
Hazardous Materials
10.2.4, **10.3**
Identification of Subcontractors and Suppliers
5.2.1
Indemnification
3.17, **3.18**, 9.10.2, 10.3.3, 10.3.5, 10.3.6, 11.3.1.2, 11.3.7
Information and Services Required of the Owner
2.1.2, **2.2**, 3.2.2, 3.12.4, 3.12.10, 6.1.3, 6.1.4, 6.2.5, 9.6.1, 9.6.4, 9.9.2, 9.10.3, 10.3.3, 11.2, 11.4, 13.5.1, 13.5.2, 14.1.1.4, 14.1.4, 15.1.3
Initial Decision
15.2
Initial Decision Maker, Definition of
1.1.8
Initial Decision Maker, Decisions
14.2.2, 14.2.4, 15.2.1, 15.2.2, 15.2.3, 15.2.4, 15.2.5
Initial Decision Maker, Extent of Authority
14.2.2, 14.2.4, 15.1.3, 15.2.1, 15.2.2, 15.2.3, 15.2.4, 15.2.5
Injury or Damage to Person or Property
10.2.8, 10.4.1
Inspections
3.1.3, 3.3.3, 3.7.1, 4.2.2, 4.2.6, 4.2.9, 9.4.2, 9.8.3, 9.9.2, 9.10.1, 12.2.1, 13.5
Instructions to Bidders
1.1.1
Instructions to the Contractor
3.2.4, 3.3.1, 3.8.1, 5.2.1, 7, 8.2.2, 12, 13.5.2
Instruments of Service, Definition of
1.1.7
Insurance
3.18.1, 6.1.1, 7.3.7, 9.3.2, 9.8.4, 9.9.1, 9.10.2, **11**
Insurance, Boiler and Machinery
11.3.2
Insurance, Contractor's Liability
11.1
Insurance, Effective Date of
8.2.2, 11.1.2
Insurance, Loss of Use
11.3.3
Insurance, Owner's Liability
11.2
Insurance, Property
10.2.5, **11.3**
Insurance, Stored Materials
9.3.2
INSURANCE AND BONDS
11
Insurance Companies, Consent to Partial Occupancy
9.9.1
Intent of the Contract Documents
1.2.1, 4.2.7, 4.2.12, 4.2.13, 7.4
Interest
13.6
Interpretation
1.2.3, **1.4**, 4.1.1, 5.1, 6.1.2, 15.1.1
Interpretations, Written
4.2.11, 4.2.12, 15.1.4
Judgment on Final Award
15.4.2
Labor and Materials, Equipment
1.1.3, 1.1.6, **3.4**, 3.5, 3.8.2, 3.8.3, 3.12, 3.13, 3.15.1, 4.2.6, 4.2.7, 5.2.1, 6.2.1, 7.3.7, 9.3.2, 9.3.3, 9.5.1.3, 9.10.2, 10.2.1, 10.2.4, 14.2.1.1, 14.2.1.2
Labor Disputes
8.3.1
Laws and Regulations
1.5, 3.2.3, 3.6, 3.7, 3.12.10, 3.13.1, 4.1.1, 9.6.4, 9.9.1, 10.2.2, 11.1.1, 11.3, 13.1.1, 13.4, 13.5.1, 13.5.2, 13.6.1, 14, 15.2.8, 15.4
Liens
2.1.2, 9.3.3, 9.10.2, 9.10.4, 15.2.8
Limitations, Statutes of
12.2.5, 13.7, 15.4.1.1
Limitations of Liability
2.3.1, 3.2.2, 3.5, 3.12.10, 3.17, 3.18.1, 4.2.6, 4.2.7, 4.2.12, 6.2.2, 9.4.2, 9.6.4, 9.6.7, 10.2.5, 10.3.3, 11.1.2, 11.2, 11.3.7, 12.2.5, 13.4.2
Limitations of Time
2.1.2, 2.2, 2.4, 3.2.2, 3.10, 3.11, 3.12.5, 3.15.1, 4.2.7, 5.2, 5.3.1, 5.4.1, 6.2.4, 7.3, 7.4, 8.2, 9.2, 9.3.1, 9.3.3, 9.4.1, 9.5, 9.6, 9.7, 9.8, 9.9, 9.10, 11.1.3, 11.3.1.5, 11.3.6, 11.3.10, 12.2, 13.5, 13.7, 14, 15
Loss of Use Insurance
11.3.3

Init.
/
AIA Document A201™ – 2007. Copyright © 1911, 1915, 1918, 1925, 1937, 1951, 1958, 1961, 1963, 1966, 1970, 1976, 1987, 1997 and 2007 by The American Institute of Architects. All rights reserved. WARNING: This AIA® Document is protected by U.S. Copyright Law and International Treaties. Unauthorized reproduction or distribution of this AIA® Document, or any portion of it, may result in severe civil and criminal penalties, and will be prosecuted to the maximum extent possible under the law. This document was produced by AIA software at 15:59:05 on 10/27/2016 under Order No 6372817173_1 which expires on 10/15/2017, and is not for resale.
User Notes:
(1230662987)

Material Suppliers
1.5, 3.12.1, 4.2.4, 4.2.6, 5.2.1, 9.3, 9.4.2, 9.6, 9.10.5
Materials, Hazardous
10.2.4, **10.3**
Materials, Labor, Equipment and
1.1.3, 1.1.6, 1.5.1, 3.4.1, 3.5, 3.8.2, 3.8.3, 3.12, 3.13.1, 3.15.1, 4.2.6, 4.2.7, 5.2.1, 6.2.1, 7.3.7, 9.3.2, 9.3.3, 9.5.1.3, 9.10.2, 10.2.1.2, 10.2.4, 14.2.1.1, 14.2.1.2
Means, Methods, Techniques, Sequences and Procedures of Construction
3.3.1, 3.12.10, 4.2.2, 4.2.7, 9.4.2
Mechanic's Lien
2.1.2, 15.2.8
Mediation
8.3.1, 10.3.5, 10.3.6, 15.2.1, 15.2.5, 15.2.6, **15.3**, 15.4.1
Minor Changes in the Work
1.1.1, 3.12.8, 4.2.8, 7.1, **7.4**
MISCELLANEOUS PROVISIONS
13
Modifications, Definition of
1.1.1
Modifications to the Contract
1.1.1, 1.1.2, 3.11, 4.1.2, 4.2.1, 5.2.3, 7, 8.3.1, 9.7, 10.3.2, 11.3.1
Mutual Responsibility
6.2
Nonconforming Work, Acceptance of
9.6.6, 9.9.3, **12.3**
Nonconforming Work, Rejection and Correction of
2.3.1, 2.4.1, 3.5, 4.2.6, 6.2.4, 9.5.1, 9.8.2, 9.9.3, 9.10.4, 12.2.1
Notice
2.2.1, 2.3.1, 2.4.1, 3.2.4, 3.3.1, 3.7.2, 3.12.9, 5.2.1, 9.7, 9.10, 10.2.2, 11.1.3, 12.2.2.1, 13.3, 13.5.1, 13.5.2, 14.1, 14.2, 15.2.8, 15.4.1
Notice, Written
2.3.1, 2.4.1, 3.3.1, 3.9.2, 3.12.9, 3.12.10, 5.2.1, 9.7, 9.10, 10.2.2, 10.3, 11.1.3, 11.3.6, 12.2.2.1, **13.3**, 14, 15.2.8, 15.4.1
Notice of Claims
3.7.4, 10.2.8, **15.1.2**, 15.4
Notice of Testing and Inspections
13.5.1, 13.5.2
Observations, Contractor's
3.2, 3.7.4
Occupancy
2.2.2, 9.6.6, 9.8, 11.3.1.5
Orders, Written
1.1.1, 2.3, 3.9.2, 7, 8.2.2, 11.3.9, 12.1, 12.2.2.1, 13.5.2, 14.3.1
OWNER
2
Owner, Definition of
2.1.1
Owner, Information and Services Required of the
2.1.2, **2.2**, 3.2.2, 3.12.10, 6.1.3, 6.1.4, 6.2.5, 9.3.2, 9.6.1, 9.6.4, 9.9.2, 9.10.3, 10.3.3, 11.2, 11.3, 13.5.1, 13.5.2, 14.1.1.4, 14.1.4, 15.1.3
Owner's Authority
1.5, 2.1.1, 2.3.1, 2.4.1, 3.4.2, 3.8.1, 3.12.10, 3.14.2, 4.1.2, 4.1.3, 4.2.4, 4.2.9, 5.2.1, 5.2.4, 5.4.1, 6.1, 6.3, 7.2.1, 7.3.1, 8.2.2, 8.3.1, 9.3.1, 9.3.2, 9.5.1, 9.6.4, 9.9.1, 9.10.2, 10.3.2, 11.1.3, 11.3.3, 11.3.10, 12.2.2, 12.3.1, 13.2.2, 14.3, 14.4, 15.2.7
Owner's Financial Capability
2.2.1, 13.2.2, 14.1.1.4
Owner's Liability Insurance
11.2
Owner's Relationship with Subcontractors
1.1.2, 5.2, 5.3, 5.4, 9.6.4, 9.10.2, 14.2.2
Owner's Right to Carry Out the Work
2.4, 14.2.2
Owner's Right to Clean Up
6.3
Owner's Right to Perform Construction and to Award Separate Contracts
6.1
Owner's Right to Stop the Work
2.3
Owner's Right to Suspend the Work
14.3
Owner's Right to Terminate the Contract
14.2
Ownership and Use of Drawings, Specifications and Other Instruments of Service
1.1.1, 1.1.6, 1.1.7, **1.5**, 2.2.5, 3.2.2, 3.11.1, 3.17, 4.2.12, 5.3.1
Partial Occupancy or Use
9.6.6, **9.9**, 11.3.1.5
Patching, Cutting and
3.14, 6.2.5
Patents
3.17
Payment, Applications for
4.2.5, 7.3.9, 9.2, **9.3**, 9.4, 9.5, 9.6.3, 9.7, 9.8.5, 9.10.1, 14.2.3, 14.2.4, 14.4.3
Payment, Certificates for
4.2.5, 4.2.9, 9.3.3, **9.4**, 9.5, 9.6.1, 9.6.6, 9.7, 9.10.1, 9.10.3, 13.7, 14.1.1.3, 14.2.4
Payment, Failure of
9.5.1.3, **9.7**, 9.10.2, 13.6, 14.1.1.3, 14.2.1.2
Payment, Final
4.2.1, 4.2.9, 9.8.2, 9.10, 11.1.2, 11.1.3, 11.4.1, 12.3.1, 13.7, 14.2.4, 14.4.3
Payment Bond, Performance Bond and
7.3.7.4, 9.6.7, 9.10.3, **11.4**
Payments, Progress
9.3, **9.6**, 9.8.5, 9.10.3, 13.6, 14.2.3, 15.1.3
PAYMENTS AND COMPLETION
9

AIA Document A201™ – 2007. Copyright © 1911, 1915, 1918, 1925, 1937, 1951, 1958, 1961, 1963, 1966, 1970, 1976, 1987, 1997 and 2007 by The American Institute of Architects. All rights reserved. WARNING: This AIA® Document is protected by U.S. Copyright Law and International Treaties. Unauthorized reproduction or distribution of this AIA® Document, or any portion of it, may result in severe civil and criminal penalties, and will be prosecuted to the maximum extent possible under the law. This document was produced by AIA software at 15:59:05 on 10/27/2016 under Order No.6372817173_1 which expires on 10/15/2017, and is not for resale.
User Notes:
(1230662987)

Payments to Subcontractors
5.4.2, 9.5.1.3, 9.6.2, 9.6.3, 9.6.4, 9.6.7, 14.2.1.2
PCB
10.3.1
Performance Bond and Payment Bond
7.3.7.4, 9.6.7, 9.10.3, **11.4**
Permits, Fees, Notices and Compliance with Laws
2.2.2, **3.7**, 3.13, 7.3.7.4, 10.2.2
PERSONS AND PROPERTY, PROTECTION OF
10
Polychlorinated Biphenyl
10.3.1
Product Data, Definition of
3.12.2
Product Data and Samples, Shop Drawings
3.11, **3.12**, 4.2.7
Progress and Completion
4.2.2, **8.2**, 9.8, 9.9.1, 14.1.4, 15.1.3
Progress Payments
9.3, **9.6**, 9.8.5, 9.10.3, 13.6, 14.2.3, 15.1.3
Project, Definition of
1.1.4
Project Representatives
4.2.10
Property Insurance
10.2.5, **11.3**
PROTECTION OF PERSONS AND PROPERTY
10
Regulations and Laws
1.5, 3.2.3, 3.6, 3.7, 3.12.10, 3.13, 4.1.1, 9.6.4, 9.9.1, 10.2.2, 11.1, 11.4, 13.1, 13.4, 13.5.1, 13.5.2, 13.6, 14, 15.2.8, 15.4
Rejection of Work
3.5, 4.2.6, 12.2.1
Releases and Waivers of Liens
9.10.2
Representations
3.2.1, 3.5, 3.12.6, 6.2.2, 8.2.1, 9.3.3, 9.4.2, 9.5.1, 9.8.2, 9.10.1
Representatives
2.1.1, 3.1.1, 3.9, 4.1.1, 4.2.1, 4.2.2, 4.2.10, 5.1.1, 5.1.2, 13.2.1
Responsibility for Those Performing the Work
3.3.2, 3.18, 4.2.3, 5.3.1, 6.1.3, 6.2, 6.3, 9.5.1, 10
Retainage
9.3.1, 9.6.2, 9.8.5, 9.9.1, 9.10.2, 9.10.3
Review of Contract Documents and Field Conditions by Contractor
3.2, 3.12.7, 6.1.3
Review of Contractor's Submittals by Owner and Architect
3.10.1, 3.10.2, 3.11, 3.12, 4.2, 5.2, 6.1.3, 9.2, 9.8.2
Review of Shop Drawings, Product Data and Samples by Contractor
3.12
Rights and Remedies
1.1.2, 2.3, 2.4, 3.5, 3.7.4, 3.15.2, 4.2.6, 5.3, 5.4, 6.1, 6.3, 7.3.1, 8.3, 9.5.1, 9.7, 10.2.5, 10.3, 12.2.2, 12.2.4, **13.4**, 14, 15.4
Royalties, Patents and Copyrights
3.17
Rules and Notices for Arbitration
15.4.1
Safety of Persons and Property
10.2, 10.4
Safety Precautions and Programs
3.3.1, 4.2.2, 4.2.7, 5.3.1, **10.1**, 10.2, 10.4
Samples, Definition of
3.12.3
Samples, Shop Drawings, Product Data and
3.11, **3.12**, 4.2.7
Samples at the Site, Documents and
3.11
Schedule of Values
9.2, 9.3.1
Schedules, Construction
3.10, 3.12.1, 3.12.2, 6.1.3, 15.1.5.2
Separate Contracts and Contractors
1.1.4, 3.12.5, 3.14.2, 4.2.4, 4.2.7, 6, 8.3.1, 12.1.2
Shop Drawings, Definition of
3.12.1
Shop Drawings, Product Data and Samples
3.11, **3.12**, 4.2.7
Site, Use of
3.13, 6.1.1, 6.2.1
Site Inspections
3.2.2, 3.3.3, 3.7.1, 3.7.4, 4.2, 9.4.2, 9.10.1, 13.5
Site Visits, Architect's
3.7.4, 4.2.2, 4.2.9, 9.4.2, 9.5.1, 9.9.2, 9.10.1, 13.5
Special Inspections and Testing
4.2.6, 12.2.1, 13.5
Specifications, Definition of
1.1.6
Specifications
1.1.1, **1.1.6**, 1.2.2, 1.5, 3.11, 3.12.10, 3.17, 4.2.14
Statute of Limitations
13.7, 15.4.1.1
Stopping the Work
2.3, 9.7, 10.3, 14.1
Stored Materials
6.2.1, 9.3.2, 10.2.1.2, 10.2.4
Subcontractor, Definition of
5.1.1
SUBCONTRACTORS
5
Subcontractors, Work by
1.2.2, 3.3.2, 3.12.1, 4.2.3, 5.2.3, 5.3, 5.4, 9.3.1.2, 9.6.7
Subcontractual Relations
5.3, 5.4, 9.3.1.2, 9.6, 9.10, 10.2.1, 14.1, 14.2.1

AIA Document A201™ – 2007. Copyright © 1911, 1915, 1918, 1925, 1937, 1951, 1958, 1961, 1963, 1966, 1970, 1976, 1987, 1997 and 2007 by The American Institute of Architects. All rights reserved. WARNING: This AIA® Document is protected by U.S. Copyright Law and International Treaties. Unauthorized reproduction or distribution of this AIA® Document, or any portion of it, may result in severe civil and criminal penalties, and will be prosecuted to the maximum extent possible under the law. This document was produced by AIA software at 15:59:05 on 10/27/2016 under Order No.6372817173_1 which expires on 10/15/2017, and is not for resale.
User Notes:
(1230662987)

Submittals
3.10, 3.11, 3.12, 4.2.7, 5.2.1, 5.2.3, 7.3.7, 9.2, 9.3, 9.8, 9.9.1, 9.10.2, 9.10.3, 11.1.3
Submittal Schedule
3.10.2, 3.12.5, 4.2.7
Subrogation, Waivers of
6.1.1, **11.3.7**
Substantial Completion
4.2.9, 8.1.1, 8.1.3, 8.2.3, 9.4.2, **9.8**, 9.9.1, 9.10.3, 12.2, 13.7
Substantial Completion, Definition of
9.8.1
Substitution of Subcontractors
5.2.3, 5.2.4
Substitution of Architect
4.1.3
Substitutions of Materials
3.4.2, 3.5, 7.3.8
Sub-subcontractor, Definition of
5.1.2
Subsurface Conditions
3.7.4
Successors and Assigns
13.2
Superintendent
3.9, 10.2.6
Supervision and Construction Procedures
1.2.2, **3.3**, 3.4, 3.12.10, 4.2.2, 4.2.7, 6.1.3, 6.2.4, 7.1.3, 7.3.7, 8.2, 8.3.1, 9.4.2, 10, 12, 14, 15.1.3
Surety
5.4.1.2, 9.8.5, 9.10.2, 9.10.3, 14.2.2, 15.2.7
Surety, Consent of
9.10.2, 9.10.3
Surveys
2.2.3
Suspension by the Owner for Convenience
14.3
Suspension of the Work
5.4.2, 14.3
Suspension or Termination of the Contract
5.4.1.1, 14
Taxes
3.6, 3.8.2.1, 7.3.7.4
Termination by the Contractor
14.1, 15.1.6
Termination by the Owner for Cause
5.4.1.1, **14.2**, 15.1.6
Termination by the Owner for Convenience
14.4
Termination of the Architect
4.1.3
Termination of the Contractor
14.2.2
TERMINATION OR SUSPENSION OF THE CONTRACT
14
Tests and Inspections
3.1.3, 3.3.3, 4.2.2, 4.2.6, 4.2.9, 9.4.2, 9.8.3, 9.9.2, 9.10.1, 10.3.2, 11.4.1.1, 12.2.1, **13.5**
TIME
8
Time, Delays and Extensions of
3.2.4, 3.7.4, 5.2.3, 7.2.1, 7.3.1, 7.4, **8.3**, 9.5.1, 9.7, 10.3.2, 10.4.1, 14.3.2, 15.1.5, 15.2.5
Time Limits
2.1.2, 2.2, 2.4, 3.2.2, 3.10, 3.11, 3.12.5, 3.15.1, 4.2, 5.2, 5.3, 5.4, 6.2.4, 7.3, 7.4, 8.2, 9.2, 9.3.1, 9.3.3, 9.4.1, 9.5, 9.6, 9.7, 9.8, 9.9, 9.10, 11.1.3, 12.2, 13.5, 13.7, 14, 15.1.2, 15.4
Time Limits on Claims
3.7.4, 10.2.8, **13.7**, 15.1.2
Title to Work
9.3.2, 9.3.3
Transmission of Data in Digital Form
1.6
UNCOVERING AND CORRECTION OF WORK
12
Uncovering of Work
12.1
Unforeseen Conditions, Concealed or Unknown
3.7.4, 8.3.1, 10.3
Unit Prices
7.3.3.2, 7.3.4
Use of Documents
1.1.1, 1.5, 2.2.5, 3.12.6, 5.3
Use of Site
3.13, 6.1.1, 6.2.1
Values, Schedule of
9.2, 9.3.1
Waiver of Claims by the Architect
13.4.2
Waiver of Claims by the Contractor
9.10.5, 13.4.2, 15.1.6
Waiver of Claims by the Owner
9.9.3, 9.10.3, 9.10.4, 12.2.2.1, 13.4.2, 14.2.4, 15.1.6
Waiver of Consequential Damages
14.2.4, 15.1.6
Waiver of Liens
9.10.2, 9.10.4
Waivers of Subrogation
6.1.1, **11.3.7**
Warranty
3.5, 4.2.9, 9.3.3, 9.8.4, 9.9.1, 9.10.4, 12.2.2, 13.7
Weather Delays
15.1.5.2
Work, Definition of
1.1.3
Written Consent
1.5.2, 3.4.2, 3.7.4, 3.12.8, 3.14.2, 4.1.2, 9.3.2, 9.8.5, 9.9.1, 9.10.2, 9.10.3, 11.4.1, 13.2, 13.4.2, 15.4.4.2
Written Interpretations
4.2.11, 4.2.12

AIA Document A201™ – 2007. Copyright © 1911, 1915, 1918, 1925, 1937, 1951, 1958, 1961, 1963, 1966, 1970, 1976, 1987, 1997 and 2007 by The American Institute of Architects. All rights reserved. WARNING: This AIA® Document is protected by U.S. Copyright Law and International Treaties. Unauthorized reproduction or distribution of this AIA® Document, or any portion of it, may result in severe civil and criminal penalties, and will be prosecuted to the maximum extent possible under the law. This document was produced by AIA software at 15:59:05 on 10/27/2016 under Order No.6372817173_1 which expires on 10/15/2017, and is not for resale.
User Notes:
(1230662987)

Written Notice
2.3, 2.4, 3.3.1, 3.9, 3.12.9, 3.12.10, 5.2.1, 8.2.2, 9.7, 9.10, 10.2.2, 10.3, 11.1.3, 12.2.2, 12.2.4, **13.3**, 14, 15.4.1

Written Orders
1.1.1, 2.3, 3.9, 7, 8.2.2, 12.1, 12.2, 13.5.2, 14.3.1, 15.1.2

AIA Document A201™ – 2007. Copyright © 1911, 1915, 1918, 1925, 1937, 1951, 1958, 1961, 1963, 1966, 1970, 1976, 1987, 1997 and 2007 by The American Institute of Architects. All rights reserved. WARNING: This AIA® Document is protected by U.S. Copyright Law and International Treaties. Unauthorized reproduction or distribution of this AIA® Document, or any portion of it, may result in severe civil and criminal penalties, and will be prosecuted to the maximum extent possible under the law. This document was produced by AIA software at 15:59:05 on 10/27/2016 under Order No.6372817173_1 which expires on 10/15/2017, and is not for resale.
User Notes:
(1230662987)

ARTICLE 1 GENERAL PROVISIONS

§ 1.1 BASIC DEFINITIONS

§ 1.1.1 THE CONTRACT DOCUMENTS

The Contract Documents are enumerated in the Agreement between the Owner and Contractor (hereinafter the Agreement) and consist of the Agreement, Conditions of the Contract (General, Supplementary and other Conditions), Drawings, Specifications, Addenda issued prior to execution of the Contract, other documents listed in the Agreement and Modifications issued after execution of the Contract. A Modification is (1) a written amendment to the Contract signed by both parties, (2) a Change Order, (3) a Construction Change Directive or (4) a written order for a minor change in the Work issued by the Architect. Unless specifically enumerated in the Agreement, the Contract Documents do not include the advertisement or invitation to bid, Instructions to Bidders, sample forms, other information furnished by the Owner in anticipation of receiving bids or proposals, the Contractor's bid or proposal, or portions of Addenda relating to bidding requirements.

§ 1.1.2 THE CONTRACT

The Contract Documents form the Contract for Construction. The Contract represents the entire and integrated agreement between the parties hereto and supersedes prior negotiations, representations or agreements, either written or oral. The Contract may be amended or modified only by a Modification. The Contract Documents shall not be construed to create a contractual relationship of any kind (1) between the Contractor and the Architect or the Architect's consultants, (2) between the Owner and a Subcontractor or a Sub-subcontractor, (3) between the Owner and the Architect or the Architect's consultants or (4) between any persons or entities other than the Owner and the Contractor. The Architect shall, however, be entitled to performance and enforcement of obligations under the Contract intended to facilitate performance of the Architect's duties.

§ 1.1.3 THE WORK

The term "Work" means the construction and services required by the Contract Documents, whether completed or partially completed, and includes all other labor, materials, equipment and services provided or to be provided by the Contractor to fulfill the Contractor's obligations. The Work may constitute the whole or a part of the Project.

§ 1.1.4 THE PROJECT

The Project is the total construction of which the Work performed under the Contract Documents may be the whole or a part and which may include construction by the Owner and by separate contractors.

§ 1.1.5 THE DRAWINGS

The Drawings are the graphic and pictorial portions of the Contract Documents showing the design, location and dimensions of the Work, generally including plans, elevations, sections, details, schedules and diagrams.

§ 1.1.6 THE SPECIFICATIONS

The Specifications are that portion of the Contract Documents consisting of the written requirements for materials, equipment, systems, standards and workmanship for the Work, and performance of related services.

§ 1.1.7 INSTRUMENTS OF SERVICE

Instruments of Service are representations, in any medium of expression now known or later developed, of the tangible and intangible creative work performed by the Architect and the Architect's consultants under their respective professional services agreements. Instruments of Service may include, without limitation, studies, surveys, models, sketches, drawings, specifications, and other similar materials.

§ 1.1.8 INITIAL DECISION MAKER

The Initial Decision Maker is the person identified in the Agreement to render initial decisions on Claims in accordance with Section 15.2 and certify termination of the Agreement under Section 14.2.2.

§ 1.2 CORRELATION AND INTENT OF THE CONTRACT DOCUMENTS

§ 1.2.1 The intent of the Contract Documents is to include all items necessary for the proper execution and completion of the Work by the Contractor. The Contract Documents are complementary, and what is required by one shall be as binding as if required by all; performance by the Contractor shall be required only to the extent consistent with the Contract Documents and reasonably inferable from them as being necessary to produce the indicated results.

AIA Document A201™ – 2007. Copyright © 1911, 1915, 1918, 1925, 1937, 1951, 1958, 1961, 1963, 1966, 1970, 1976, 1987, 1997 and 2007 by The American Institute of Architects. All rights reserved. WARNING: This AIA® Document is protected by U.S. Copyright Law and International Treaties. Unauthorized reproduction or distribution of this AIA® Document, or any portion of it, may result in severe civil and criminal penalties, and will be prosecuted to the maximum extent possible under the law. This document was produced by AIA software at 15:59:05 on 10/27/2016 under Order No 6372817173_1 which expires on 10/15/2017, and is not for resale.
User Notes:

(1230662987)

§ 1.2.2 Organization of the Specifications into divisions, sections and articles, and arrangement of Drawings shall not control the Contractor in dividing the Work among Subcontractors or in establishing the extent of Work to be performed by any trade.

§ 1.2.3 Unless otherwise stated in the Contract Documents, words that have well-known technical or construction industry meanings are used in the Contract Documents in accordance with such recognized meanings.

§ 1.3 CAPITALIZATION

Terms capitalized in these General Conditions include those that are (1) specifically defined, (2) the titles of numbered articles or (3) the titles of other documents published by the American Institute of Architects.

§ 1.4 INTERPRETATION

In the interest of brevity the Contract Documents frequently omit modifying words such as "all" and "any" and articles such as "the" and "an," but the fact that a modifier or an article is absent from one statement and appears in another is not intended to affect the interpretation of either statement.

§ 1.5 OWNERSHIP AND USE OF DRAWINGS, SPECIFICATIONS AND OTHER INSTRUMENTS OF SERVICE

§ 1.5.1 The Architect and the Architect's consultants shall be deemed the authors and owners of their respective Instruments of Service, including the Drawings and Specifications, and will retain all common law, statutory and other reserved rights, including copyrights. The Contractor, Subcontractors, Sub-subcontractors, and material or equipment suppliers shall not own or claim a copyright in the Instruments of Service. Submittal or distribution to meet official regulatory requirements or for other purposes in connection with this Project is not to be construed as publication in derogation of the Architect's or Architect's consultants' reserved rights.

§ 1.5.2 The Contractor, Subcontractors, Sub-subcontractors and material or equipment suppliers are authorized to use and reproduce the Instruments of Service provided to them solely and exclusively for execution of the Work. All copies made under this authorization shall bear the copyright notice, if any, shown on the Instruments of Service. The Contractor, Subcontractors, Sub-subcontractors, and material or equipment suppliers may not use the Instruments of Service on other projects or for additions to this Project outside the scope of the Work without the specific written consent of the Owner, Architect and the Architect's consultants.

§ 1.6 TRANSMISSION OF DATA IN DIGITAL FORM

If the parties intend to transmit Instruments of Service or any other information or documentation in digital form, they shall endeavor to establish necessary protocols governing such transmissions, unless otherwise already provided in the Agreement or the Contract Documents.

ARTICLE 2 OWNER

§ 2.1 GENERAL

§ 2.1.1 The Owner is the person or entity identified as such in the Agreement and is referred to throughout the Contract Documents as if singular in number. The Owner shall designate in writing a representative who shall have express authority to bind the Owner with respect to all matters requiring the Owner's approval or authorization. Except as otherwise provided in Section 4.2.1, the Architect does not have such authority. The term "Owner" means the Owner or the Owner's authorized representative.

§ 2.1.2 The Owner shall furnish to the Contractor within fifteen days after receipt of a written request, information necessary and relevant for the Contractor to evaluate, give notice of or enforce mechanic's lien rights. Such information shall include a correct statement of the record legal title to the property on which the Project is located, usually referred to as the site, and the Owner's interest therein.

§ 2.2 INFORMATION AND SERVICES REQUIRED OF THE OWNER

§ 2.2.1 Prior to commencement of the Work, the Contractor may request in writing that the Owner provide reasonable evidence that the Owner has made financial arrangements to fulfill the Owner's obligations under the Contract. Thereafter, the Contractor may only request such evidence if (1) the Owner fails to make payments to the Contractor as the Contract Documents require; (2) a change in the Work materially changes the Contract Sum; or (3) the Contractor identifies in writing a reasonable concern regarding the Owner's ability to make payment when due. The Owner shall furnish such evidence as a condition precedent to commencement or continuation of the Work or

AIA Document A201™ – 2007. Copyright © 1911, 1915, 1918, 1925, 1937, 1951, 1958, 1961, 1963, 1966, 1970, 1976, 1987, 1997 and 2007 by The American Institute of Architects. All rights reserved. WARNING: This AIA® Document is protected by U.S. Copyright Law and International Treaties. Unauthorized reproduction or distribution of this AIA® Document, or any portion of it, may result in severe civil and criminal penalties, and will be prosecuted to the maximum extent possible under the law. This document was produced by AIA software at 15:59:05 on 10/27/2016 under Order No 6372817173_1 which expires on 10/15/2017, and is not for resale.
User Notes:
(1230662987)

the portion of the Work affected by a material change. After the Owner furnishes the evidence, the Owner shall not materially vary such financial arrangements without prior notice to the Contractor.

§ 2.2.2 Except for permits and fees that are the responsibility of the Contractor under the Contract Documents, including those required under Section 3.7.1, the Owner shall secure and pay for necessary approvals, easements, assessments and charges required for construction, use or occupancy of permanent structures or for permanent changes in existing facilities.

§ 2.2.3 The Owner shall furnish surveys describing physical characteristics, legal limitations and utility locations for the site of the Project, and a legal description of the site. The Contractor shall be entitled to rely on the accuracy of information furnished by the Owner but shall exercise proper precautions relating to the safe performance of the Work.

§ 2.2.4 The Owner shall furnish information or services required of the Owner by the Contract Documents with reasonable promptness. The Owner shall also furnish any other information or services under the Owner's control and relevant to the Contractor's performance of the Work with reasonable promptness after receiving the Contractor's written request for such information or services.

§ 2.2.5 Unless otherwise provided in the Contract Documents, the Owner shall furnish to the Contractor one copy of the Contract Documents for purposes of making reproductions pursuant to Section 1.5.2.

§ 2.3 OWNER'S RIGHT TO STOP THE WORK

If the Contractor fails to correct Work that is not in accordance with the requirements of the Contract Documents as required by Section 12.2 or repeatedly fails to carry out Work in accordance with the Contract Documents, the Owner may issue a written order to the Contractor to stop the Work, or any portion thereof, until the cause for such order has been eliminated; however, the right of the Owner to stop the Work shall not give rise to a duty on the part of the Owner to exercise this right for the benefit of the Contractor or any other person or entity, except to the extent required by Section 6.1.3.

§ 2.4 OWNER'S RIGHT TO CARRY OUT THE WORK

If the Contractor defaults or neglects to carry out the Work in accordance with the Contract Documents and fails within a ten-day period after receipt of written notice from the Owner to commence and continue correction of such default or neglect with diligence and promptness, the Owner may, without prejudice to other remedies the Owner may have, correct such deficiencies. In such case an appropriate Change Order shall be issued deducting from payments then or thereafter due the Contractor the reasonable cost of correcting such deficiencies, including Owner's expenses and compensation for the Architect's additional services made necessary by such default, neglect or failure. Such action by the Owner and amounts charged to the Contractor are both subject to prior approval of the Architect. If payments then or thereafter due the Contractor are not sufficient to cover such amounts, the Contractor shall pay the difference to the Owner.

ARTICLE 3 CONTRACTOR

§ 3.1 GENERAL

§ 3.1.1 The Contractor is the person or entity identified as such in the Agreement and is referred to throughout the Contract Documents as if singular in number. The Contractor shall be lawfully licensed, if required in the jurisdiction where the Project is located. The Contractor shall designate in writing a representative who shall have express authority to bind the Contractor with respect to all matters under this Contract. The term "Contractor" means the Contractor or the Contractor's authorized representative.

§ 3.1.2 The Contractor shall perform the Work in accordance with the Contract Documents.

§ 3.1.3 The Contractor shall not be relieved of obligations to perform the Work in accordance with the Contract Documents either by activities or duties of the Architect in the Architect's administration of the Contract, or by tests, inspections or approvals required or performed by persons or entities other than the Contractor.

AIA Document A201™ – 2007. Copyright © 1911, 1915, 1918, 1925, 1937, 1951, 1958, 1961, 1963, 1966, 1970, 1976, 1987, 1997 and 2007 by The American Institute of Architects. All rights reserved. WARNING: This AIA® Document is protected by U.S. Copyright Law and International Treaties. Unauthorized reproduction or distribution of this AIA® Document, or any portion of it, may result in severe civil and criminal penalties, and will be prosecuted to the maximum extent possible under the law. This document was produced by AIA software at 15:59:05 on 10/27/2016 under Order No.6372817173_1 which expires on 10/15/2017, and is not for resale.
User Notes:
(1230662987)

§ 3.2 REVIEW OF CONTRACT DOCUMENTS AND FIELD CONDITIONS BY CONTRACTOR

§ 3.2.1 Execution of the Contract by the Contractor is a representation that the Contractor has visited the site, become generally familiar with local conditions under which the Work is to be performed and correlated personal observations with requirements of the Contract Documents.

§ 3.2.2 Because the Contract Documents are complementary, the Contractor shall, before starting each portion of the Work, carefully study and compare the various Contract Documents relative to that portion of the Work, as well as the information furnished by the Owner pursuant to Section 2.2.3, shall take field measurements of any existing conditions related to that portion of the Work, and shall observe any conditions at the site affecting it. These obligations are for the purpose of facilitating coordination and construction by the Contractor and are not for the purpose of discovering errors, omissions, or inconsistencies in the Contract Documents; however, the Contractor shall promptly report to the Architect any errors, inconsistencies or omissions discovered by or made known to the Contractor as a request for information in such form as the Architect may require. It is recognized that the Contractor's review is made in the Contractor's capacity as a contractor and not as a licensed design professional, unless otherwise specifically provided in the Contract Documents.

§ 3.2.3 The Contractor is not required to ascertain that the Contract Documents are in accordance with applicable laws, statutes, ordinances, codes, rules and regulations, or lawful orders of public authorities, but the Contractor shall promptly report to the Architect any nonconformity discovered by or made known to the Contractor as a request for information in such form as the Architect may require.

§ 3.2.4 If the Contractor believes that additional cost or time is involved because of clarifications or instructions the Architect issues in response to the Contractor's notices or requests for information pursuant to Sections 3.2.2 or 3.2.3, the Contractor shall make Claims as provided in Article 15. If the Contractor fails to perform the obligations of Sections 3.2.2 or 3.2.3, the Contractor shall pay such costs and damages to the Owner as would have been avoided if the Contractor had performed such obligations. If the Contractor performs those obligations, the Contractor shall not be liable to the Owner or Architect for damages resulting from errors, inconsistencies or omissions in the Contract Documents, for differences between field measurements or conditions and the Contract Documents, or for nonconformities of the Contract Documents to applicable laws, statutes, ordinances, codes, rules and regulations, and lawful orders of public authorities.

§ 3.3 SUPERVISION AND CONSTRUCTION PROCEDURES

§ 3.3.1 The Contractor shall supervise and direct the Work, using the Contractor's best skill and attention. The Contractor shall be solely responsible for, and have control over, construction means, methods, techniques, sequences and procedures and for coordinating all portions of the Work under the Contract, unless the Contract Documents give other specific instructions concerning these matters. If the Contract Documents give specific instructions concerning construction means, methods, techniques, sequences or procedures, the Contractor shall evaluate the jobsite safety thereof and, except as stated below, shall be fully and solely responsible for the jobsite safety of such means, methods, techniques, sequences or procedures. If the Contractor determines that such means, methods, techniques, sequences or procedures may not be safe, the Contractor shall give timely written notice to the Owner and Architect and shall not proceed with that portion of the Work without further written instructions from the Architect. If the Contractor is then instructed to proceed with the required means, methods, techniques, sequences or procedures without acceptance of changes proposed by the Contractor, the Owner shall be solely responsible for any loss or damage arising solely from those Owner-required means, methods, techniques, sequences or procedures.

§ 3.3.2 The Contractor shall be responsible to the Owner for acts and omissions of the Contractor's employees, Subcontractors and their agents and employees, and other persons or entities performing portions of the Work for, or on behalf of, the Contractor or any of its Subcontractors.

§ 3.3.3 The Contractor shall be responsible for inspection of portions of Work already performed to determine that such portions are in proper condition to receive subsequent Work.

§ 3.4 LABOR AND MATERIALS

§ 3.4.1 Unless otherwise provided in the Contract Documents, the Contractor shall provide and pay for labor, materials, equipment, tools, construction equipment and machinery, water, heat, utilities, transportation, and other

AIA Document A201™ – 2007. Copyright © 1911, 1915, 1918, 1925, 1937, 1951, 1958, 1961, 1963, 1966, 1970, 1976, 1987, 1997 and 2007 by The American Institute of Architects. All rights reserved. WARNING: This AIA® Document is protected by U.S. Copyright Law and International Treaties. Unauthorized reproduction or distribution of this AIA® Document, or any portion of it, may result in severe civil and criminal penalties, and will be prosecuted to the maximum extent possible under the law. This document was produced by AIA software at 15:59:05 on 10/27/2016 under Order No.6372817173_1 which expires on 10/15/2017, and is not for resale.
User Notes:

(1230662987)

facilities and services necessary for proper execution and completion of the Work, whether temporary or permanent and whether or not incorporated or to be incorporated in the Work.

§ 3.4.2 Except in the case of minor changes in the Work authorized by the Architect in accordance with Sections 3.12.8 or 7.4, the Contractor may make substitutions only with the consent of the Owner, after evaluation by the Architect and in accordance with a Change Order or Construction Change Directive.

§ 3.4.3 The Contractor shall enforce strict discipline and good order among the Contractor's employees and other persons carrying out the Work. The Contractor shall not permit employment of unfit persons or persons not properly skilled in tasks assigned to them.

§ 3.5 WARRANTY

The Contractor warrants to the Owner and Architect that materials and equipment furnished under the Contract will be of good quality and new unless the Contract Documents require or permit otherwise. The Contractor further warrants that the Work will conform to the requirements of the Contract Documents and will be free from defects, except for those inherent in the quality of the Work the Contract Documents require or permit. Work, materials, or equipment not conforming to these requirements may be considered defective. The Contractor's warranty excludes remedy for damage or defect caused by abuse, alterations to the Work not executed by the Contractor, improper or insufficient maintenance, improper operation, or normal wear and tear and normal usage. If required by the Architect, the Contractor shall furnish satisfactory evidence as to the kind and quality of materials and equipment.

§ 3.6 TAXES

The Contractor shall pay sales, consumer, use and similar taxes for the Work provided by the Contractor that are legally enacted when bids are received or negotiations concluded, whether or not yet effective or merely scheduled to go into effect.

§ 3.7 PERMITS, FEES, NOTICES AND COMPLIANCE WITH LAWS

§ 3.7.1 Unless otherwise provided in the Contract Documents, the Contractor shall secure and pay for the building permit as well as for other permits, fees, licenses, and inspections by government agencies necessary for proper execution and completion of the Work that are customarily secured after execution of the Contract and legally required at the time bids are received or negotiations concluded.

§ 3.7.2 The Contractor shall comply with and give notices required by applicable laws, statutes, ordinances, codes, rules and regulations, and lawful orders of public authorities applicable to performance of the Work.

§ 3.7.3 If the Contractor performs Work knowing it to be contrary to applicable laws, statutes, ordinances, codes, rules and regulations, or lawful orders of public authorities, the Contractor shall assume appropriate responsibility for such Work and shall bear the costs attributable to correction.

§ 3.7.4 Concealed or Unknown Conditions. If the Contractor encounters conditions at the site that are (1) subsurface or otherwise concealed physical conditions that differ materially from those indicated in the Contract Documents or (2) unknown physical conditions of an unusual nature, that differ materially from those ordinarily found to exist and generally recognized as inherent in construction activities of the character provided for in the Contract Documents, the Contractor shall promptly provide notice to the Owner and the Architect before conditions are disturbed and in no event later than 21 days after first observance of the conditions. The Architect will promptly investigate such conditions and, if the Architect determines that they differ materially and cause an increase or decrease in the Contractor's cost of, or time required for, performance of any part of the Work, will recommend an equitable adjustment in the Contract Sum or Contract Time, or both. If the Architect determines that the conditions at the site are not materially different from those indicated in the Contract Documents and that no change in the terms of the Contract is justified, the Architect shall promptly notify the Owner and Contractor in writing, stating the reasons. If either party disputes the Architect's determination or recommendation, that party may proceed as provided in Article 15.

§ 3.7.5 If, in the course of the Work, the Contractor encounters human remains or recognizes the existence of burial markers, archaeological sites or wetlands not indicated in the Contract Documents, the Contractor shall immediately suspend any operations that would affect them and shall notify the Owner and Architect. Upon receipt of such notice, the Owner shall promptly take any action necessary to obtain governmental authorization required to resume

AIA Document A201™ – 2007. Copyright © 1911, 1915, 1918, 1925, 1937, 1951, 1958, 1961, 1963, 1966, 1970, 1976, 1987, 1997 and 2007 by The American Institute of Architects. All rights reserved. WARNING: This AIA® Document is protected by U.S. Copyright Law and International Treaties. Unauthorized reproduction or distribution of this AIA® Document, or any portion of it, may result in severe civil and criminal penalties, and will be prosecuted to the maximum extent possible under the law. This document was produced by AIA software at 15:59:05 on 10/27/2016 under Order No.6372817173_1 which expires on 10/15/2017, and is not for resale.
User Notes:

(1230662987)

the operations. The Contractor shall continue to suspend such operations until otherwise instructed by the Owner but shall continue with all other operations that do not affect those remains or features. Requests for adjustments in the Contract Sum and Contract Time arising from the existence of such remains or features may be made as provided in Article 15.

§ 3.8 ALLOWANCES

§ 3.8.1 The Contractor shall include in the Contract Sum all allowances stated in the Contract Documents. Items covered by allowances shall be supplied for such amounts and by such persons or entities as the Owner may direct, but the Contractor shall not be required to employ persons or entities to whom the Contractor has reasonable objection.

§ 3.8.2 Unless otherwise provided in the Contract Documents,

- **.1** Allowances shall cover the cost to the Contractor of materials and equipment delivered at the site and all required taxes, less applicable trade discounts;
- **.2** Contractor's costs for unloading and handling at the site, labor, installation costs, overhead, profit and other expenses contemplated for stated allowance amounts shall be included in the Contract Sum but not in the allowances; and
- **.3** Whenever costs are more than or less than allowances, the Contract Sum shall be adjusted accordingly by Change Order. The amount of the Change Order shall reflect (1) the difference between actual costs and the allowances under Section 3.8.2.1 and (2) changes in Contractor's costs under Section 3.8.2.2.

§ 3.8.3 Materials and equipment under an allowance shall be selected by the Owner with reasonable promptness.

§ 3.9 SUPERINTENDENT

§ 3.9.1 The Contractor shall employ a competent superintendent and necessary assistants who shall be in attendance at the Project site during performance of the Work. The superintendent shall represent the Contractor, and communications given to the superintendent shall be as binding as if given to the Contractor.

§ 3.9.2 The Contractor, as soon as practicable after award of the Contract, shall furnish in writing to the Owner through the Architect the name and qualifications of a proposed superintendent. The Architect may reply within 14 days to the Contractor in writing stating (1) whether the Owner or the Architect has reasonable objection to the proposed superintendent or (2) that the Architect requires additional time to review. Failure of the Architect to reply within the 14 day period shall constitute notice of no reasonable objection.

§ 3.9.3 The Contractor shall not employ a proposed superintendent to whom the Owner or Architect has made reasonable and timely objection. The Contractor shall not change the superintendent without the Owner's consent, which shall not unreasonably be withheld or delayed.

§ 3.10 CONTRACTOR'S CONSTRUCTION SCHEDULES

§ 3.10.1 The Contractor, promptly after being awarded the Contract, shall prepare and submit for the Owner's and Architect's information a Contractor's construction schedule for the Work. The schedule shall not exceed time limits current under the Contract Documents, shall be revised at appropriate intervals as required by the conditions of the Work and Project, shall be related to the entire Project to the extent required by the Contract Documents, and shall provide for expeditious and practicable execution of the Work.

§ 3.10.2 The Contractor shall prepare a submittal schedule, promptly after being awarded the Contract and thereafter as necessary to maintain a current submittal schedule, and shall submit the schedule(s) for the Architect's approval. The Architect's approval shall not unreasonably be delayed or withheld. The submittal schedule shall (1) be coordinated with the Contractor's construction schedule, and (2) allow the Architect reasonable time to review submittals. If the Contractor fails to submit a submittal schedule, the Contractor shall not be entitled to any increase in Contract Sum or extension of Contract Time based on the time required for review of submittals.

§ 3.10.3 The Contractor shall perform the Work in general accordance with the most recent schedules submitted to the Owner and Architect.

AIA Document A201™ – 2007. Copyright © 1911, 1915, 1918, 1925, 1937, 1951, 1958, 1961, 1963, 1966, 1970, 1976, 1987, 1997 and 2007 by The American Institute of Architects. All rights reserved. WARNING: This AIA® Document is protected by U.S. Copyright Law and International Treaties. Unauthorized reproduction or distribution of this AIA® Document, or any portion of it, may result in severe civil and criminal penalties, and will be prosecuted to the maximum extent possible under the law. This document was produced by AIA software at 15:59:05 on 10/27/2016 under Order No.6372817173_1 which expires on 10/15/2017, and is not for resale.
User Notes:
(1230662987)

§ 3.11 DOCUMENTS AND SAMPLES AT THE SITE
The Contractor shall maintain at the site for the Owner one copy of the Drawings, Specifications, Addenda, Change Orders and other Modifications, in good order and marked currently to indicate field changes and selections made during construction, and one copy of approved Shop Drawings, Product Data, Samples and similar required submittals. These shall be available to the Architect and shall be delivered to the Architect for submittal to the Owner upon completion of the Work as a record of the Work as constructed.

§ 3.12 SHOP DRAWINGS, PRODUCT DATA AND SAMPLES
§ 3.12.1 Shop Drawings are drawings, diagrams, schedules and other data specially prepared for the Work by the Contractor or a Subcontractor, Sub-subcontractor, manufacturer, supplier or distributor to illustrate some portion of the Work.

§ 3.12.2 Product Data are illustrations, standard schedules, performance charts, instructions, brochures, diagrams and other information furnished by the Contractor to illustrate materials or equipment for some portion of the Work.

§ 3.12.3 Samples are physical examples that illustrate materials, equipment or workmanship and establish standards by which the Work will be judged.

§ 3.12.4 Shop Drawings, Product Data, Samples and similar submittals are not Contract Documents. Their purpose is to demonstrate the way by which the Contractor proposes to conform to the information given and the design concept expressed in the Contract Documents for those portions of the Work for which the Contract Documents require submittals. Review by the Architect is subject to the limitations of Section 4.2.7. Informational submittals upon which the Architect is not expected to take responsive action may be so identified in the Contract Documents. Submittals that are not required by the Contract Documents may be returned by the Architect without action.

§ 3.12.5 The Contractor shall review for compliance with the Contract Documents, approve and submit to the Architect Shop Drawings, Product Data, Samples and similar submittals required by the Contract Documents in accordance with the submittal schedule approved by the Architect or, in the absence of an approved submittal schedule, with reasonable promptness and in such sequence as to cause no delay in the Work or in the activities of the Owner or of separate contractors.

§ 3.12.6 By submitting Shop Drawings, Product Data, Samples and similar submittals, the Contractor represents to the Owner and Architect that the Contractor has (1) reviewed and approved them, (2) determined and verified materials, field measurements and field construction criteria related thereto, or will do so and (3) checked and coordinated the information contained within such submittals with the requirements of the Work and of the Contract Documents.

§ 3.12.7 The Contractor shall perform no portion of the Work for which the Contract Documents require submittal and review of Shop Drawings, Product Data, Samples or similar submittals until the respective submittal has been approved by the Architect.

§ 3.12.8 The Work shall be in accordance with approved submittals except that the Contractor shall not be relieved of responsibility for deviations from requirements of the Contract Documents by the Architect's approval of Shop Drawings, Product Data, Samples or similar submittals unless the Contractor has specifically informed the Architect in writing of such deviation at the time of submittal and (1) the Architect has given written approval to the specific deviation as a minor change in the Work, or (2) a Change Order or Construction Change Directive has been issued authorizing the deviation. The Contractor shall not be relieved of responsibility for errors or omissions in Shop Drawings, Product Data, Samples or similar submittals by the Architect's approval thereof.

§ 3.12.9 The Contractor shall direct specific attention, in writing or on resubmitted Shop Drawings, Product Data, Samples or similar submittals, to revisions other than those requested by the Architect on previous submittals. In the absence of such written notice, the Architect's approval of a resubmission shall not apply to such revisions.

§ 3.12.10 The Contractor shall not be required to provide professional services that constitute the practice of architecture or engineering unless such services are specifically required by the Contract Documents for a portion of the Work or unless the Contractor needs to provide such services in order to carry out the Contractor's responsibilities for construction means, methods, techniques, sequences and procedures. The Contractor shall not be

AIA Document A201™ – 2007. Copyright © 1911, 1915, 1918, 1925, 1937, 1951, 1958, 1961, 1963, 1966, 1970, 1976, 1987, 1997 and 2007 by The American Institute of Architects. All rights reserved. WARNING: This AIA® Document is protected by U.S. Copyright Law and International Treaties. Unauthorized reproduction or distribution of this AIA® Document, or any portion of it, may result in severe civil and criminal penalties, and will be prosecuted to the maximum extent possible under the law. This document was produced by AIA software at 15:59:05 on 10/27/2016 under Order No.6372817173_1 which expires on 10/15/2017, and is not for resale.
User Notes:
(1230662987)

required to provide professional services in violation of applicable law. If professional design services or certifications by a design professional related to systems, materials or equipment are specifically required of the Contractor by the Contract Documents, the Owner and the Architect will specify all performance and design criteria that such services must satisfy. The Contractor shall cause such services or certifications to be provided by a properly licensed design professional, whose signature and seal shall appear on all drawings, calculations, specifications, certifications, Shop Drawings and other submittals prepared by such professional. Shop Drawings and other submittals related to the Work designed or certified by such professional, if prepared by others, shall bear such professional's written approval when submitted to the Architect. The Owner and the Architect shall be entitled to rely upon the adequacy, accuracy and completeness of the services, certifications and approvals performed or provided by such design professionals, provided the Owner and Architect have specified to the Contractor all performance and design criteria that such services must satisfy. Pursuant to this Section 3.12.10, the Architect will review, approve or take other appropriate action on submittals only for the limited purpose of checking for conformance with information given and the design concept expressed in the Contract Documents. The Contractor shall not be responsible for the adequacy of the performance and design criteria specified in the Contract Documents.

§ 3.13 USE OF SITE

The Contractor shall confine operations at the site to areas permitted by applicable laws, statutes, ordinances, codes, rules and regulations, and lawful orders of public authorities and the Contract Documents and shall not unreasonably encumber the site with materials or equipment.

§ 3.14 CUTTING AND PATCHING

§ 3.14.1 The Contractor shall be responsible for cutting, fitting or patching required to complete the Work or to make its parts fit together properly. All areas requiring cutting, fitting and patching shall be restored to the condition existing prior to the cutting, fitting and patching, unless otherwise required by the Contract Documents.

§ 3.14.2 The Contractor shall not damage or endanger a portion of the Work or fully or partially completed construction of the Owner or separate contractors by cutting, patching or otherwise altering such construction, or by excavation. The Contractor shall not cut or otherwise alter such construction by the Owner or a separate contractor except with written consent of the Owner and of such separate contractor; such consent shall not be unreasonably withheld. The Contractor shall not unreasonably withhold from the Owner or a separate contractor the Contractor's consent to cutting or otherwise altering the Work.

§ 3.15 CLEANING UP

§ 3.15.1 The Contractor shall keep the premises and surrounding area free from accumulation of waste materials or rubbish caused by operations under the Contract. At completion of the Work, the Contractor shall remove waste materials, rubbish, the Contractor's tools, construction equipment, machinery and surplus materials from and about the Project.

§ 3.15.2 If the Contractor fails to clean up as provided in the Contract Documents, the Owner may do so and Owner shall be entitled to reimbursement from the Contractor.

§ 3.16 ACCESS TO WORK

The Contractor shall provide the Owner and Architect access to the Work in preparation and progress wherever located.

§ 3.17 ROYALTIES, PATENTS AND COPYRIGHTS

The Contractor shall pay all royalties and license fees. The Contractor shall defend suits or claims for infringement of copyrights and patent rights and shall hold the Owner and Architect harmless from loss on account thereof, but shall not be responsible for such defense or loss when a particular design, process or product of a particular manufacturer or manufacturers is required by the Contract Documents, or where the copyright violations are contained in Drawings, Specifications or other documents prepared by the Owner or Architect. However, if the Contractor has reason to believe that the required design, process or product is an infringement of a copyright or a patent, the Contractor shall be responsible for such loss unless such information is promptly furnished to the Architect.

AIA Document A201™ – 2007. Copyright © 1911, 1915, 1918, 1925, 1937, 1951, 1958, 1961, 1963, 1966, 1970, 1976, 1987, 1997 and 2007 by The American Institute of Architects. All rights reserved. WARNING: This AIA® Document is protected by U.S. Copyright Law and International Treaties. Unauthorized reproduction or distribution of this AIA® Document, or any portion of it, may result in severe civil and criminal penalties, and will be prosecuted to the maximum extent possible under the law. This document was produced by AIA software at 15:59:05 on 10/27/2016 under Order No.6372817173_1 which expires on 10/15/2017, and is not for resale.
User Notes:
(1230662987)

§ 3.18 INDEMNIFICATION

§ 3.18.1 To the fullest extent permitted by law the Contractor shall indemnify and hold harmless the Owner, Architect, Architect's consultants, and agents and employees of any of them from and against claims, damages, losses and expenses, including but not limited to attorneys' fees, arising out of or resulting from performance of the Work, provided that such claim, damage, loss or expense is attributable to bodily injury, sickness, disease or death, or to injury to or destruction of tangible property (other than the Work itself), but only to the extent caused by the negligent acts or omissions of the Contractor, a Subcontractor, anyone directly or indirectly employed by them or anyone for whose acts they may be liable, regardless of whether or not such claim, damage, loss or expense is caused in part by a party indemnified hereunder. Such obligation shall not be construed to negate, abridge, or reduce other rights or obligations of indemnity that would otherwise exist as to a party or person described in this Section 3.18.

§ 3.18.2 In claims against any person or entity indemnified under this Section 3.18 by an employee of the Contractor, a Subcontractor, anyone directly or indirectly employed by them or anyone for whose acts they may be liable, the indemnification obligation under Section 3.18.1 shall not be limited by a limitation on amount or type of damages, compensation or benefits payable by or for the Contractor or a Subcontractor under workers' compensation acts, disability benefit acts or other employee benefit acts.

ARTICLE 4 ARCHITECT

§ 4.1 GENERAL

§ 4.1.1 The Owner shall retain an architect lawfully licensed to practice architecture or an entity lawfully practicing architecture in the jurisdiction where the Project is located. That person or entity is identified as the Architect in the Agreement and is referred to throughout the Contract Documents as if singular in number.

§ 4.1.2 Duties, responsibilities and limitations of authority of the Architect as set forth in the Contract Documents shall not be restricted, modified or extended without written consent of the Owner, Contractor and Architect. Consent shall not be unreasonably withheld.

§ 4.1.3 If the employment of the Architect is terminated, the Owner shall employ a successor architect as to whom the Contractor has no reasonable objection and whose status under the Contract Documents shall be that of the Architect.

§ 4.2 ADMINISTRATION OF THE CONTRACT

§ 4.2.1 The Architect will provide administration of the Contract as described in the Contract Documents and will be an Owner's representative during construction until the date the Architect issues the final Certificate for Payment. The Architect will have authority to act on behalf of the Owner only to the extent provided in the Contract Documents.

§ 4.2.2 The Architect will visit the site at intervals appropriate to the stage of construction, or as otherwise agreed with the Owner, to become generally familiar with the progress and quality of the portion of the Work completed, and to determine in general if the Work observed is being performed in a manner indicating that the Work, when fully completed, will be in accordance with the Contract Documents. However, the Architect will not be required to make exhaustive or continuous on-site inspections to check the quality or quantity of the Work. The Architect will not have control over, charge of, or responsibility for, the construction means, methods, techniques, sequences or procedures, or for the safety precautions and programs in connection with the Work, since these are solely the Contractor's rights and responsibilities under the Contract Documents, except as provided in Section 3.3.1.

§ 4.2.3 On the basis of the site visits, the Architect will keep the Owner reasonably informed about the progress and quality of the portion of the Work completed, and report to the Owner (1) known deviations from the Contract Documents and from the most recent construction schedule submitted by the Contractor, and (2) defects and deficiencies observed in the Work. The Architect will not be responsible for the Contractor's failure to perform the Work in accordance with the requirements of the Contract Documents. The Architect will not have control over or charge of and will not be responsible for acts or omissions of the Contractor, Subcontractors, or their agents or employees, or any other persons or entities performing portions of the Work.

AIA Document A201™ – 2007. Copyright © 1911, 1915, 1918, 1925, 1937, 1951, 1958, 1961, 1963, 1966, 1970, 1976, 1987, 1997 and 2007 by The American Institute of Architects. All rights reserved. WARNING: This AIA® Document is protected by U.S. Copyright Law and International Treaties. Unauthorized reproduction or distribution of this AIA® Document, or any portion of it, may result in severe civil and criminal penalties, and will be prosecuted to the maximum extent possible under the law. This document was produced by AIA software at 15:59:05 on 10/27/2016 under Order No.6372817173_1 which expires on 10/15/2017, and is not for resale.
User Notes:
(1230662987)

§ 4.2.4 COMMUNICATIONS FACILITATING CONTRACT ADMINISTRATION
Except as otherwise provided in the Contract Documents or when direct communications have been specially authorized, the Owner and Contractor shall endeavor to communicate with each other through the Architect about matters arising out of or relating to the Contract. Communications by and with the Architect's consultants shall be through the Architect. Communications by and with Subcontractors and material suppliers shall be through the Contractor. Communications by and with separate contractors shall be through the Owner.

§ 4.2.5 Based on the Architect's evaluations of the Contractor's Applications for Payment, the Architect will review and certify the amounts due the Contractor and will issue Certificates for Payment in such amounts.

§ 4.2.6 The Architect has authority to reject Work that does not conform to the Contract Documents. Whenever the Architect considers it necessary or advisable, the Architect will have authority to require inspection or testing of the Work in accordance with Sections 13.5.2 and 13.5.3, whether or not such Work is fabricated, installed or completed. However, neither this authority of the Architect nor a decision made in good faith either to exercise or not to exercise such authority shall give rise to a duty or responsibility of the Architect to the Contractor, Subcontractors, material and equipment suppliers, their agents or employees, or other persons or entities performing portions of the Work.

§ 4.2.7 The Architect will review and approve, or take other appropriate action upon, the Contractor's submittals such as Shop Drawings, Product Data and Samples, but only for the limited purpose of checking for conformance with information given and the design concept expressed in the Contract Documents. The Architect's action will be taken in accordance with the submittal schedule approved by the Architect or, in the absence of an approved submittal schedule, with reasonable promptness while allowing sufficient time in the Architect's professional judgment to permit adequate review. Review of such submittals is not conducted for the purpose of determining the accuracy and completeness of other details such as dimensions and quantities, or for substantiating instructions for installation or performance of equipment or systems, all of which remain the responsibility of the Contractor as required by the Contract Documents. The Architect's review of the Contractor's submittals shall not relieve the Contractor of the obligations under Sections 3.3, 3.5 and 3.12. The Architect's review shall not constitute approval of safety precautions or, unless otherwise specifically stated by the Architect, of any construction means, methods, techniques, sequences or procedures. The Architect's approval of a specific item shall not indicate approval of an assembly of which the item is a component.

§ 4.2.8 The Architect will prepare Change Orders and Construction Change Directives, and may authorize minor changes in the Work as provided in Section 7.4. The Architect will investigate and make determinations and recommendations regarding concealed and unknown conditions as provided in Section 3.7.4.

§ 4.2.9 The Architect will conduct inspections to determine the date or dates of Substantial Completion and the date of final completion; issue Certificates of Substantial Completion pursuant to Section 9.8; receive and forward to the Owner, for the Owner's review and records, written warranties and related documents required by the Contract and assembled by the Contractor pursuant to Section 9.10; and issue a final Certificate for Payment pursuant to Section 9.10.

§ 4.2.10 If the Owner and Architect agree, the Architect will provide one or more project representatives to assist in carrying out the Architect's responsibilities at the site. The duties, responsibilities and limitations of authority of such project representatives shall be as set forth in an exhibit to be incorporated in the Contract Documents.

§ 4.2.11 The Architect will interpret and decide matters concerning performance under, and requirements of, the Contract Documents on written request of either the Owner or Contractor. The Architect's response to such requests will be made in writing within any time limits agreed upon or otherwise with reasonable promptness.

§ 4.2.12 Interpretations and decisions of the Architect will be consistent with the intent of, and reasonably inferable from, the Contract Documents and will be in writing or in the form of drawings. When making such interpretations and decisions, the Architect will endeavor to secure faithful performance by both Owner and Contractor, will not show partiality to either and will not be liable for results of interpretations or decisions rendered in good faith.

§ 4.2.13 The Architect's decisions on matters relating to aesthetic effect will be final if consistent with the intent expressed in the Contract Documents.

AIA Document A201™ – 2007. Copyright © 1911, 1915, 1918, 1925, 1937, 1951, 1958, 1961, 1963, 1966, 1970, 1976, 1987, 1997 and 2007 by The American Institute of Architects. All rights reserved. WARNING: This AIA® Document is protected by U.S. Copyright Law and International Treaties. Unauthorized reproduction or distribution of this AIA® Document, or any portion of it, may result in severe civil and criminal penalties, and will be prosecuted to the maximum extent possible under the law. This document was produced by AIA software at 15:59:05 on 10/27/2016 under Order No.6372817173_1 which expires on 10/15/2017, and is not for resale.
User Notes:
(1230662987)

§ 4.2.14 The Architect will review and respond to requests for information about the Contract Documents. The Architect's response to such requests will be made in writing within any time limits agreed upon or otherwise with reasonable promptness. If appropriate, the Architect will prepare and issue supplemental Drawings and Specifications in response to the requests for information.

ARTICLE 5 SUBCONTRACTORS

§ 5.1 DEFINITIONS

§ 5.1.1 A Subcontractor is a person or entity who has a direct contract with the Contractor to perform a portion of the Work at the site. The term "Subcontractor" is referred to throughout the Contract Documents as if singular in number and means a Subcontractor or an authorized representative of the Subcontractor. The term "Subcontractor" does not include a separate contractor or subcontractors of a separate contractor.

§ 5.1.2 A Sub-subcontractor is a person or entity who has a direct or indirect contract with a Subcontractor to perform a portion of the Work at the site. The term "Sub-subcontractor" is referred to throughout the Contract Documents as if singular in number and means a Sub-subcontractor or an authorized representative of the Sub-subcontractor.

§ 5.2 AWARD OF SUBCONTRACTS AND OTHER CONTRACTS FOR PORTIONS OF THE WORK

§ 5.2.1 Unless otherwise stated in the Contract Documents or the bidding requirements, the Contractor, as soon as practicable after award of the Contract, shall furnish in writing to the Owner through the Architect the names of persons or entities (including those who are to furnish materials or equipment fabricated to a special design) proposed for each principal portion of the Work. The Architect may reply within 14 days to the Contractor in writing stating (1) whether the Owner or the Architect has reasonable objection to any such proposed person or entity or (2) that the Architect requires additional time for review. Failure of the Owner or Architect to reply within the 14-day period shall constitute notice of no reasonable objection.

§ 5.2.2 The Contractor shall not contract with a proposed person or entity to whom the Owner or Architect has made reasonable and timely objection. The Contractor shall not be required to contract with anyone to whom the Contractor has made reasonable objection.

§ 5.2.3 If the Owner or Architect has reasonable objection to a person or entity proposed by the Contractor, the Contractor shall propose another to whom the Owner or Architect has no reasonable objection. If the proposed but rejected Subcontractor was reasonably capable of performing the Work, the Contract Sum and Contract Time shall be increased or decreased by the difference, if any, occasioned by such change, and an appropriate Change Order shall be issued before commencement of the substitute Subcontractor's Work. However, no increase in the Contract Sum or Contract Time shall be allowed for such change unless the Contractor has acted promptly and responsively in submitting names as required.

§ 5.2.4 The Contractor shall not substitute a Subcontractor, person or entity previously selected if the Owner or Architect makes reasonable objection to such substitution.

§ 5.3 SUBCONTRACTUAL RELATIONS

By appropriate agreement, written where legally required for validity, the Contractor shall require each Subcontractor, to the extent of the Work to be performed by the Subcontractor, to be bound to the Contractor by terms of the Contract Documents, and to assume toward the Contractor all the obligations and responsibilities, including the responsibility for safety of the Subcontractor's Work, which the Contractor, by these Documents, assumes toward the Owner and Architect. Each subcontract agreement shall preserve and protect the rights of the Owner and Architect under the Contract Documents with respect to the Work to be performed by the Subcontractor so that subcontracting thereof will not prejudice such rights, and shall allow to the Subcontractor, unless specifically provided otherwise in the subcontract agreement, the benefit of all rights, remedies and redress against the Contractor that the Contractor, by the Contract Documents, has against the Owner. Where appropriate, the Contractor shall require each Subcontractor to enter into similar agreements with Sub-subcontractors. The Contractor shall make available to each proposed Subcontractor, prior to the execution of the subcontract agreement, copies of the Contract Documents to which the Subcontractor will be bound, and, upon written request of the Subcontractor, identify to the Subcontractor terms and conditions of the proposed subcontract agreement that may

AIA Document A201™ – 2007. Copyright © 1911, 1915, 1918, 1925, 1937, 1951, 1958, 1961, 1963, 1966, 1970, 1976, 1987, 1997 and 2007 by The American Institute of Architects. All rights reserved. WARNING: This AIA® Document is protected by U.S. Copyright Law and International Treaties. Unauthorized reproduction or distribution of this AIA® Document, or any portion of it, may result in severe civil and criminal penalties, and will be prosecuted to the maximum extent possible under the law. This document was produced by AIA software at 15:59:05 on 10/27/2016 under Order No.6372817173_1 which expires on 10/15/2017, and is not for resale.
User Notes:
(1230662987)

be at variance with the Contract Documents. Subcontractors will similarly make copies of applicable portions of such documents available to their respective proposed Sub-subcontractors.

§ 5.4 CONTINGENT ASSIGNMENT OF SUBCONTRACTS

§ 5.4.1 Each subcontract agreement for a portion of the Work is assigned by the Contractor to the Owner, provided that

.1 assignment is effective only after termination of the Contract by the Owner for cause pursuant to Section 14.2 and only for those subcontract agreements that the Owner accepts by notifying the Subcontractor and Contractor in writing; and

.2 assignment is subject to the prior rights of the surety, if any, obligated under bond relating to the Contract.

When the Owner accepts the assignment of a subcontract agreement, the Owner assumes the Contractor's rights and obligations under the subcontract.

§ 5.4.2 Upon such assignment, if the Work has been suspended for more than 30 days, the Subcontractor's compensation shall be equitably adjusted for increases in cost resulting from the suspension.

§ 5.4.3 Upon such assignment to the Owner under this Section 5.4, the Owner may further assign the subcontract to a successor contractor or other entity. If the Owner assigns the subcontract to a successor contractor or other entity, the Owner shall nevertheless remain legally responsible for all of the successor contractor's obligations under the subcontract.

ARTICLE 6 CONSTRUCTION BY OWNER OR BY SEPARATE CONTRACTORS

§ 6.1 OWNER'S RIGHT TO PERFORM CONSTRUCTION AND TO AWARD SEPARATE CONTRACTS

§ 6.1.1 The Owner reserves the right to perform construction or operations related to the Project with the Owner's own forces, and to award separate contracts in connection with other portions of the Project or other construction or operations on the site under Conditions of the Contract identical or substantially similar to these including those portions related to insurance and waiver of subrogation. If the Contractor claims that delay or additional cost is involved because of such action by the Owner, the Contractor shall make such Claim as provided in Article 15.

§ 6.1.2 When separate contracts are awarded for different portions of the Project or other construction or operations on the site, the term "Contractor" in the Contract Documents in each case shall mean the Contractor who executes each separate Owner-Contractor Agreement.

§ 6.1.3 The Owner shall provide for coordination of the activities of the Owner's own forces and of each separate contractor with the Work of the Contractor, who shall cooperate with them. The Contractor shall participate with other separate contractors and the Owner in reviewing their construction schedules. The Contractor shall make any revisions to the construction schedule deemed necessary after a joint review and mutual agreement. The construction schedules shall then constitute the schedules to be used by the Contractor, separate contractors and the Owner until subsequently revised.

§ 6.1.4 Unless otherwise provided in the Contract Documents, when the Owner performs construction or operations related to the Project with the Owner's own forces, the Owner shall be deemed to be subject to the same obligations and to have the same rights that apply to the Contractor under the Conditions of the Contract, including, without excluding others, those stated in Article 3, this Article 6 and Articles 10, 11 and 12.

§ 6.2 MUTUAL RESPONSIBILITY

§ 6.2.1 The Contractor shall afford the Owner and separate contractors reasonable opportunity for introduction and storage of their materials and equipment and performance of their activities, and shall connect and coordinate the Contractor's construction and operations with theirs as required by the Contract Documents.

§ 6.2.2 If part of the Contractor's Work depends for proper execution or results upon construction or operations by the Owner or a separate contractor, the Contractor shall, prior to proceeding with that portion of the Work, promptly report to the Architect apparent discrepancies or defects in such other construction that would render it unsuitable for such proper execution and results. Failure of the Contractor so to report shall constitute an acknowledgment that

AIA Document A201™ – 2007. Copyright © 1911, 1915, 1918, 1925, 1937, 1951, 1958, 1961, 1963, 1966, 1970, 1976, 1987, 1997 and 2007 by The American Institute of Architects. All rights reserved. WARNING: This AIA® Document is protected by U.S. Copyright Law and International Treaties. Unauthorized reproduction or distribution of this AIA® Document, or any portion of it, may result in severe civil and criminal penalties, and will be prosecuted to the maximum extent possible under the law. This document was produced by AIA software at 15:59:05 on 10/27/2016 under Order No.6372817173_1 which expires on 10/15/2017, and is not for resale.
User Notes:

(1230662987)

the Owner's or separate contractor's completed or partially completed construction is fit and proper to receive the Contractor's Work, except as to defects not then reasonably discoverable.

§ 6.2.3 The Contractor shall reimburse the Owner for costs the Owner incurs that are payable to a separate contractor because of the Contractor's delays, improperly timed activities or defective construction. The Owner shall be responsible to the Contractor for costs the Contractor incurs because of a separate contractor's delays, improperly timed activities, damage to the Work or defective construction.

§ 6.2.4 The Contractor shall promptly remedy damage the Contractor wrongfully causes to completed or partially completed construction or to property of the Owner or separate contractors as provided in Section 10.2.5.

§ 6.2.5 The Owner and each separate contractor shall have the same responsibilities for cutting and patching as are described for the Contractor in Section 3.14.

§ 6.3 OWNER'S RIGHT TO CLEAN UP

If a dispute arises among the Contractor, separate contractors and the Owner as to the responsibility under their respective contracts for maintaining the premises and surrounding area free from waste materials and rubbish, the Owner may clean up and the Architect will allocate the cost among those responsible.

ARTICLE 7 CHANGES IN THE WORK

§ 7.1 GENERAL

§ 7.1.1 Changes in the Work may be accomplished after execution of the Contract, and without invalidating the Contract, by Change Order, Construction Change Directive or order for a minor change in the Work, subject to the limitations stated in this Article 7 and elsewhere in the Contract Documents.

§ 7.1.2 A Change Order shall be based upon agreement among the Owner, Contractor and Architect; a Construction Change Directive requires agreement by the Owner and Architect and may or may not be agreed to by the Contractor; an order for a minor change in the Work may be issued by the Architect alone.

§ 7.1.3 Changes in the Work shall be performed under applicable provisions of the Contract Documents, and the Contractor shall proceed promptly, unless otherwise provided in the Change Order, Construction Change Directive or order for a minor change in the Work.

§ 7.2 CHANGE ORDERS

§ 7.2.1 A Change Order is a written instrument prepared by the Architect and signed by the Owner, Contractor and Architect stating their agreement upon all of the following:

- .1 The change in the Work;
- .2 The amount of the adjustment, if any, in the Contract Sum; and
- .3 The extent of the adjustment, if any, in the Contract Time.

§ 7.3 CONSTRUCTION CHANGE DIRECTIVES

§ 7.3.1 A Construction Change Directive is a written order prepared by the Architect and signed by the Owner and Architect, directing a change in the Work prior to agreement on adjustment, if any, in the Contract Sum or Contract Time, or both. The Owner may by Construction Change Directive, without invalidating the Contract, order changes in the Work within the general scope of the Contract consisting of additions, deletions or other revisions, the Contract Sum and Contract Time being adjusted accordingly.

§ 7.3.2 A Construction Change Directive shall be used in the absence of total agreement on the terms of a Change Order.

§ 7.3.3 If the Construction Change Directive provides for an adjustment to the Contract Sum, the adjustment shall be based on one of the following methods:

- .1 Mutual acceptance of a lump sum properly itemized and supported by sufficient substantiating data to permit evaluation;
- .2 Unit prices stated in the Contract Documents or subsequently agreed upon;
- .3 Cost to be determined in a manner agreed upon by the parties and a mutually acceptable fixed or percentage fee; or

AIA Document A201™ – 2007. Copyright © 1911, 1915, 1918, 1925, 1937, 1951, 1958, 1961, 1963, 1966, 1970, 1976, 1987, 1997 and 2007 by The American Institute of Architects. All rights reserved. WARNING: This AIA® Document is protected by U.S. Copyright Law and International Treaties. Unauthorized reproduction or distribution of this AIA® Document, or any portion of it, may result in severe civil and criminal penalties, and will be prosecuted to the maximum extent possible under the law. This document was produced by AIA software at 15:59:05 on 10/27/2016 under Order No.6372817173_1 which expires on 10/15/2017, and is not for resale.
User Notes:

(1230662987)

.4 As provided in Section 7.3.7.

§ 7.3.4 If unit prices are stated in the Contract Documents or subsequently agreed upon, and if quantities originally contemplated are materially changed in a proposed Change Order or Construction Change Directive so that application of such unit prices to quantities of Work proposed will cause substantial inequity to the Owner or Contractor, the applicable unit prices shall be equitably adjusted.

§ 7.3.5 Upon receipt of a Construction Change Directive, the Contractor shall promptly proceed with the change in the Work involved and advise the Architect of the Contractor's agreement or disagreement with the method, if any, provided in the Construction Change Directive for determining the proposed adjustment in the Contract Sum or Contract Time.

§ 7.3.6 A Construction Change Directive signed by the Contractor indicates the Contractor's agreement therewith, including adjustment in Contract Sum and Contract Time or the method for determining them. Such agreement shall be effective immediately and shall be recorded as a Change Order.

§ 7.3.7 If the Contractor does not respond promptly or disagrees with the method for adjustment in the Contract Sum, the Architect shall determine the method and the adjustment on the basis of reasonable expenditures and savings of those performing the Work attributable to the change, including, in case of an increase in the Contract Sum, an amount for overhead and profit as set forth in the Agreement, or if no such amount is set forth in the Agreement, a reasonable amount. In such case, and also under Section 7.3.3.3, the Contractor shall keep and present, in such form as the Architect may prescribe, an itemized accounting together with appropriate supporting data. Unless otherwise provided in the Contract Documents, costs for the purposes of this Section 7.3.7 shall be limited to the following:

.1 Costs of labor, including social security, old age and unemployment insurance, fringe benefits required by agreement or custom, and workers' compensation insurance;

.2 Costs of materials, supplies and equipment, including cost of transportation, whether incorporated or consumed;

.3 Rental costs of machinery and equipment, exclusive of hand tools, whether rented from the Contractor or others;

.4 Costs of premiums for all bonds and insurance, permit fees, and sales, use or similar taxes related to the Work; and

.5 Additional costs of supervision and field office personnel directly attributable to the change.

§ 7.3.8 The amount of credit to be allowed by the Contractor to the Owner for a deletion or change that results in a net decrease in the Contract Sum shall be actual net cost as confirmed by the Architect. When both additions and credits covering related Work or substitutions are involved in a change, the allowance for overhead and profit shall be figured on the basis of net increase, if any, with respect to that change.

§ 7.3.9 Pending final determination of the total cost of a Construction Change Directive to the Owner, the Contractor may request payment for Work completed under the Construction Change Directive in Applications for Payment. The Architect will make an interim determination for purposes of monthly certification for payment for those costs and certify for payment the amount that the Architect determines, in the Architect's professional judgment, to be reasonably justified. The Architect's interim determination of cost shall adjust the Contract Sum on the same basis as a Change Order, subject to the right of either party to disagree and assert a Claim in accordance with Article 15.

§ 7.3.10 When the Owner and Contractor agree with a determination made by the Architect concerning the adjustments in the Contract Sum and Contract Time, or otherwise reach agreement upon the adjustments, such agreement shall be effective immediately and the Architect will prepare a Change Order. Change Orders may be issued for all or any part of a Construction Change Directive.

§ 7.4 MINOR CHANGES IN THE WORK

The Architect has authority to order minor changes in the Work not involving adjustment in the Contract Sum or extension of the Contract Time and not inconsistent with the intent of the Contract Documents. Such changes will be effected by written order signed by the Architect and shall be binding on the Owner and Contractor.

AIA Document A201™ – 2007. Copyright © 1911, 1915, 1918, 1925, 1937, 1951, 1958, 1961, 1963, 1966, 1970, 1976, 1987, 1997 and 2007 by The American Institute of Architects. All rights reserved. WARNING: This AIA® Document is protected by U.S. Copyright Law and International Treaties. Unauthorized reproduction or distribution of this AIA® Document, or any portion of it, may result in severe civil and criminal penalties, and will be prosecuted to the maximum extent possible under the law. This document was produced by AIA software at 15 59:05 on 10/27/2016 under Order No 6372817173_1 which expires on 10/15/2017, and is not for resale.
User Notes:
(1230662987)

ARTICLE 8 TIME

§ 8.1 DEFINITIONS

§ 8.1.1 Unless otherwise provided, Contract Time is the period of time, including authorized adjustments, allotted in the Contract Documents for Substantial Completion of the Work.

§ 8.1.2 The date of commencement of the Work is the date established in the Agreement.

§ 8.1.3 The date of Substantial Completion is the date certified by the Architect in accordance with Section 9.8.

§ 8.1.4 The term "day" as used in the Contract Documents shall mean calendar day unless otherwise specifically defined.

§ 8.2 PROGRESS AND COMPLETION

§ 8.2.1 Time limits stated in the Contract Documents are of the essence of the Contract. By executing the Agreement the Contractor confirms that the Contract Time is a reasonable period for performing the Work.

§ 8.2.2 The Contractor shall not knowingly, except by agreement or instruction of the Owner in writing, prematurely commence operations on the site or elsewhere prior to the effective date of insurance required by Article 11 to be furnished by the Contractor and Owner. The date of commencement of the Work shall not be changed by the effective date of such insurance.

§ 8.2.3 The Contractor shall proceed expeditiously with adequate forces and shall achieve Substantial Completion within the Contract Time.

§ 8.3 DELAYS AND EXTENSIONS OF TIME

§ 8.3.1 If the Contractor is delayed at any time in the commencement or progress of the Work by an act or neglect of the Owner or Architect, or of an employee of either, or of a separate contractor employed by the Owner; or by changes ordered in the Work; or by labor disputes, fire, unusual delay in deliveries, unavoidable casualties or other causes beyond the Contractor's control; or by delay authorized by the Owner pending mediation and arbitration; or by other causes that the Architect determines may justify delay, then the Contract Time shall be extended by Change Order for such reasonable time as the Architect may determine.

§ 8.3.2 Claims relating to time shall be made in accordance with applicable provisions of Article 15.

§ 8.3.3 This Section 8.3 does not preclude recovery of damages for delay by either party under other provisions of the Contract Documents.

ARTICLE 9 PAYMENTS AND COMPLETION

§ 9.1 CONTRACT SUM

The Contract Sum is stated in the Agreement and, including authorized adjustments, is the total amount payable by the Owner to the Contractor for performance of the Work under the Contract Documents.

§ 9.2 SCHEDULE OF VALUES

Where the Contract is based on a stipulated sum or Guaranteed Maximum Price, the Contractor shall submit to the Architect, before the first Application for Payment, a schedule of values allocating the entire Contract Sum to the various portions of the Work and prepared in such form and supported by such data to substantiate its accuracy as the Architect may require. This schedule, unless objected to by the Architect, shall be used as a basis for reviewing the Contractor's Applications for Payment.

§ 9.3 APPLICATIONS FOR PAYMENT

§ 9.3.1 At least ten days before the date established for each progress payment, the Contractor shall submit to the Architect an itemized Application for Payment prepared in accordance with the schedule of values, if required under Section 9.2, for completed portions of the Work. Such application shall be notarized, if required, and supported by such data substantiating the Contractor's right to payment as the Owner or Architect may require, such as copies of requisitions from Subcontractors and material suppliers, and shall reflect retainage if provided for in the Contract Documents.

AIA Document A201™ – 2007. Copyright © 1911, 1915, 1918, 1925, 1937, 1951, 1958, 1961, 1963, 1966, 1970, 1976, 1987, 1997 and 2007 by The American Institute of Architects. All rights reserved. WARNING: This AIA® Document is protected by U.S. Copyright Law and International Treaties. Unauthorized reproduction or distribution of this AIA® Document, or any portion of it, may result in severe civil and criminal penalties, and will be prosecuted to the maximum extent possible under the law. This document was produced by AIA software at 15:59:05 on 10/27/2016 under Order No.6372817173_1 which expires on 10/15/2017, and is not for resale.
User Notes:
(1230662987)

§ 9.3.1.1 As provided in Section 7.3.9, such applications may include requests for payment on account of changes in the Work that have been properly authorized by Construction Change Directives, or by interim determinations of the Architect, but not yet included in Change Orders.

§ 9.3.1.2 Applications for Payment shall not include requests for payment for portions of the Work for which the Contractor does not intend to pay a Subcontractor or material supplier, unless such Work has been performed by others whom the Contractor intends to pay.

§ 9.3.2 Unless otherwise provided in the Contract Documents, payments shall be made on account of materials and equipment delivered and suitably stored at the site for subsequent incorporation in the Work. If approved in advance by the Owner, payment may similarly be made for materials and equipment suitably stored off the site at a location agreed upon in writing. Payment for materials and equipment stored on or off the site shall be conditioned upon compliance by the Contractor with procedures satisfactory to the Owner to establish the Owner's title to such materials and equipment or otherwise protect the Owner's interest, and shall include the costs of applicable insurance, storage and transportation to the site for such materials and equipment stored off the site.

§ 9.3.3 The Contractor warrants that title to all Work covered by an Application for Payment will pass to the Owner no later than the time of payment. The Contractor further warrants that upon submittal of an Application for Payment all Work for which Certificates for Payment have been previously issued and payments received from the Owner shall, to the best of the Contractor's knowledge, information and belief, be free and clear of liens, claims, security interests or encumbrances in favor of the Contractor, Subcontractors, material suppliers, or other persons or entities making a claim by reason of having provided labor, materials and equipment relating to the Work.

§ 9.4 CERTIFICATES FOR PAYMENT

§ 9.4.1 The Architect will, within seven days after receipt of the Contractor's Application for Payment, either issue to the Owner a Certificate for Payment, with a copy to the Contractor, for such amount as the Architect determines is properly due, or notify the Contractor and Owner in writing of the Architect's reasons for withholding certification in whole or in part as provided in Section 9.5.1.

§ 9.4.2 The issuance of a Certificate for Payment will constitute a representation by the Architect to the Owner, based on the Architect's evaluation of the Work and the data comprising the Application for Payment, that, to the best of the Architect's knowledge, information and belief, the Work has progressed to the point indicated and that the quality of the Work is in accordance with the Contract Documents. The foregoing representations are subject to an evaluation of the Work for conformance with the Contract Documents upon Substantial Completion, to results of subsequent tests and inspections, to correction of minor deviations from the Contract Documents prior to completion and to specific qualifications expressed by the Architect. The issuance of a Certificate for Payment will further constitute a representation that the Contractor is entitled to payment in the amount certified. However, the issuance of a Certificate for Payment will not be a representation that the Architect has (1) made exhaustive or continuous on-site inspections to check the quality or quantity of the Work, (2) reviewed construction means, methods, techniques, sequences or procedures, (3) reviewed copies of requisitions received from Subcontractors and material suppliers and other data requested by the Owner to substantiate the Contractor's right to payment, or (4) made examination to ascertain how or for what purpose the Contractor has used money previously paid on account of the Contract Sum.

§ 9.5 DECISIONS TO WITHHOLD CERTIFICATION

§ 9.5.1 The Architect may withhold a Certificate for Payment in whole or in part, to the extent reasonably necessary to protect the Owner, if in the Architect's opinion the representations to the Owner required by Section 9.4.2 cannot be made. If the Architect is unable to certify payment in the amount of the Application, the Architect will notify the Contractor and Owner as provided in Section 9.4.1. If the Contractor and Architect cannot agree on a revised amount, the Architect will promptly issue a Certificate for Payment for the amount for which the Architect is able to make such representations to the Owner. The Architect may also withhold a Certificate for Payment or, because of subsequently discovered evidence, may nullify the whole or a part of a Certificate for Payment previously issued, to such extent as may be necessary in the Architect's opinion to protect the Owner from loss for which the Contractor is responsible, including loss resulting from acts and omissions described in Section 3.3.2, because of

- .1 defective Work not remedied;
- .2 third party claims filed or reasonable evidence indicating probable filing of such claims unless security acceptable to the Owner is provided by the Contractor;

AIA Document A201™ – 2007. Copyright © 1911, 1915, 1918, 1925, 1937, 1951, 1958, 1961, 1963, 1966, 1970, 1976, 1987, 1997 and 2007 by The American Institute of Architects. All rights reserved. WARNING: This AIA® Document is protected by U.S. Copyright Law and International Treaties. Unauthorized reproduction or distribution of this AIA® Document, or any portion of it, may result in severe civil and criminal penalties, and will be prosecuted to the maximum extent possible under the law. This document was produced by AIA software at 15:59:05 on 10/27/2016 under Order No.6372817173_1 which expires on 10/15/2017, and is not for resale.
User Notes:

(1230662987)

.3 failure of the Contractor to make payments properly to Subcontractors or for labor, materials or equipment;
.4 reasonable evidence that the Work cannot be completed for the unpaid balance of the Contract Sum;
.5 damage to the Owner or a separate contractor;
.6 reasonable evidence that the Work will not be completed within the Contract Time, and that the unpaid balance would not be adequate to cover actual or liquidated damages for the anticipated delay; or
.7 repeated failure to carry out the Work in accordance with the Contract Documents.

§ 9.5.2 When the above reasons for withholding certification are removed, certification will be made for amounts previously withheld.

§ 9.5.3 If the Architect withholds certification for payment under Section 9.5.1.3, the Owner may, at its sole option, issue joint checks to the Contractor and to any Subcontractor or material or equipment suppliers to whom the Contractor failed to make payment for Work properly performed or material or equipment suitably delivered. If the Owner makes payments by joint check, the Owner shall notify the Architect and the Architect will reflect such payment on the next Certificate for Payment.

§ 9.6 PROGRESS PAYMENTS

§ 9.6.1 After the Architect has issued a Certificate for Payment, the Owner shall make payment in the manner and within the time provided in the Contract Documents, and shall so notify the Architect.

§ 9.6.2 The Contractor shall pay each Subcontractor no later than seven days after receipt of payment from the Owner the amount to which the Subcontractor is entitled, reflecting percentages actually retained from payments to the Contractor on account of the Subcontractor's portion of the Work. The Contractor shall, by appropriate agreement with each Subcontractor, require each Subcontractor to make payments to Sub-subcontractors in a similar manner.

§ 9.6.3 The Architect will, on request, furnish to a Subcontractor, if practicable, information regarding percentages of completion or amounts applied for by the Contractor and action taken thereon by the Architect and Owner on account of portions of the Work done by such Subcontractor.

§ 9.6.4 The Owner has the right to request written evidence from the Contractor that the Contractor has properly paid Subcontractors and material and equipment suppliers amounts paid by the Owner to the Contractor for subcontracted Work. If the Contractor fails to furnish such evidence within seven days, the Owner shall have the right to contact Subcontractors to ascertain whether they have been properly paid. Neither the Owner nor Architect shall have an obligation to pay or to see to the payment of money to a Subcontractor, except as may otherwise be required by law.

§ 9.6.5 Contractor payments to material and equipment suppliers shall be treated in a manner similar to that provided in Sections 9.6.2, 9.6.3 and 9.6.4.

§ 9.6.6 A Certificate for Payment, a progress payment, or partial or entire use or occupancy of the Project by the Owner shall not constitute acceptance of Work not in accordance with the Contract Documents.

§ 9.6.7 Unless the Contractor provides the Owner with a payment bond in the full penal sum of the Contract Sum, payments received by the Contractor for Work properly performed by Subcontractors and suppliers shall be held by the Contractor for those Subcontractors or suppliers who performed Work or furnished materials, or both, under contract with the Contractor for which payment was made by the Owner. Nothing contained herein shall require money to be placed in a separate account and not commingled with money of the Contractor, shall create any fiduciary liability or tort liability on the part of the Contractor for breach of trust or shall entitle any person or entity to an award of punitive damages against the Contractor for breach of the requirements of this provision.

§ 9.7 FAILURE OF PAYMENT

If the Architect does not issue a Certificate for Payment, through no fault of the Contractor, within seven days after receipt of the Contractor's Application for Payment, or if the Owner does not pay the Contractor within seven days after the date established in the Contract Documents the amount certified by the Architect or awarded by binding

AIA Document A201™ – 2007. Copyright © 1911, 1915, 1918, 1925, 1937, 1951, 1958, 1961, 1963, 1966, 1970, 1976, 1987, 1997 and 2007 by The American Institute of Architects. All rights reserved. WARNING: This AIA® Document is protected by U.S. Copyright Law and International Treaties. Unauthorized reproduction or distribution of this AIA® Document, or any portion of it, may result in severe civil and criminal penalties, and will be prosecuted to the maximum extent possible under the law. This document was produced by AIA software at 15:59:05 on 10/27/2016 under Order No.6372817173_1 which expires on 10/15/2017, and is not for resale.
User Notes:
(1230662987)

dispute resolution, then the Contractor may, upon seven additional days' written notice to the Owner and Architect, stop the Work until payment of the amount owing has been received. The Contract Time shall be extended appropriately and the Contract Sum shall be increased by the amount of the Contractor's reasonable costs of shut-down, delay and start-up, plus interest as provided for in the Contract Documents.

§ 9.8 SUBSTANTIAL COMPLETION

§ 9.8.1 Substantial Completion is the stage in the progress of the Work when the Work or designated portion thereof is sufficiently complete in accordance with the Contract Documents so that the Owner can occupy or utilize the Work for its intended use.

§ 9.8.2 When the Contractor considers that the Work, or a portion thereof which the Owner agrees to accept separately, is substantially complete, the Contractor shall prepare and submit to the Architect a comprehensive list of items to be completed or corrected prior to final payment. Failure to include an item on such list does not alter the responsibility of the Contractor to complete all Work in accordance with the Contract Documents.

§ 9.8.3 Upon receipt of the Contractor's list, the Architect will make an inspection to determine whether the Work or designated portion thereof is substantially complete. If the Architect's inspection discloses any item, whether or not included on the Contractor's list, which is not sufficiently complete in accordance with the Contract Documents so that the Owner can occupy or utilize the Work or designated portion thereof for its intended use, the Contractor shall, before issuance of the Certificate of Substantial Completion, complete or correct such item upon notification by the Architect. In such case, the Contractor shall then submit a request for another inspection by the Architect to determine Substantial Completion.

§ 9.8.4 When the Work or designated portion thereof is substantially complete, the Architect will prepare a Certificate of Substantial Completion that shall establish the date of Substantial Completion, shall establish responsibilities of the Owner and Contractor for security, maintenance, heat, utilities, damage to the Work and insurance, and shall fix the time within which the Contractor shall finish all items on the list accompanying the Certificate. Warranties required by the Contract Documents shall commence on the date of Substantial Completion of the Work or designated portion thereof unless otherwise provided in the Certificate of Substantial Completion.

§ 9.8.5 The Certificate of Substantial Completion shall be submitted to the Owner and Contractor for their written acceptance of responsibilities assigned to them in such Certificate. Upon such acceptance and consent of surety, if any, the Owner shall make payment of retainage applying to such Work or designated portion thereof. Such payment shall be adjusted for Work that is incomplete or not in accordance with the requirements of the Contract Documents.

§ 9.9 PARTIAL OCCUPANCY OR USE

§ 9.9.1 The Owner may occupy or use any completed or partially completed portion of the Work at any stage when such portion is designated by separate agreement with the Contractor, provided such occupancy or use is consented to by the insurer as required under Section 11.3.1.5 and authorized by public authorities having jurisdiction over the Project. Such partial occupancy or use may commence whether or not the portion is substantially complete, provided the Owner and Contractor have accepted in writing the responsibilities assigned to each of them for payments, retainage, if any, security, maintenance, heat, utilities, damage to the Work and insurance, and have agreed in writing concerning the period for correction of the Work and commencement of warranties required by the Contract Documents. When the Contractor considers a portion substantially complete, the Contractor shall prepare and submit a list to the Architect as provided under Section 9.8.2. Consent of the Contractor to partial occupancy or use shall not be unreasonably withheld. The stage of the progress of the Work shall be determined by written agreement between the Owner and Contractor or, if no agreement is reached, by decision of the Architect.

§ 9.9.2 Immediately prior to such partial occupancy or use, the Owner, Contractor and Architect shall jointly inspect the area to be occupied or portion of the Work to be used in order to determine and record the condition of the Work.

§ 9.9.3 Unless otherwise agreed upon, partial occupancy or use of a portion or portions of the Work shall not constitute acceptance of Work not complying with the requirements of the Contract Documents.

AIA Document A201™ – 2007. Copyright © 1911, 1915, 1918, 1925, 1937, 1951, 1958, 1961, 1963, 1966, 1970, 1976, 1987, 1997 and 2007 by The American Institute of Architects. All rights reserved. WARNING: This AIA® Document is protected by U.S. Copyright Law and International Treaties. Unauthorized reproduction or distribution of this AIA® Document, or any portion of it, may result in severe civil and criminal penalties, and will be prosecuted to the maximum extent possible under the law. This document was produced by AIA software at 15:59:05 on 10/27/2016 under Order No.6372817173_1 which expires on 10/15/2017, and is not for resale.
User Notes:
(1230662987)

§ 9.10 FINAL COMPLETION AND FINAL PAYMENT

§ 9.10.1 Upon receipt of the Contractor's written notice that the Work is ready for final inspection and acceptance and upon receipt of a final Application for Payment, the Architect will promptly make such inspection and, when the Architect finds the Work acceptable under the Contract Documents and the Contract fully performed, the Architect will promptly issue a final Certificate for Payment stating that to the best of the Architect's knowledge, information and belief, and on the basis of the Architect's on-site visits and inspections, the Work has been completed in accordance with terms and conditions of the Contract Documents and that the entire balance found to be due the Contractor and noted in the final Certificate is due and payable. The Architect's final Certificate for Payment will constitute a further representation that conditions listed in Section 9.10.2 as precedent to the Contractor's being entitled to final payment have been fulfilled.

§ 9.10.2 Neither final payment nor any remaining retained percentage shall become due until the Contractor submits to the Architect (1) an affidavit that payrolls, bills for materials and equipment, and other indebtedness connected with the Work for which the Owner or the Owner's property might be responsible or encumbered (less amounts withheld by Owner) have been paid or otherwise satisfied, (2) a certificate evidencing that insurance required by the Contract Documents to remain in force after final payment is currently in effect and will not be canceled or allowed to expire until at least 30 days' prior written notice has been given to the Owner, (3) a written statement that the Contractor knows of no substantial reason that the insurance will not be renewable to cover the period required by the Contract Documents, (4) consent of surety, if any, to final payment and (5), if required by the Owner, other data establishing payment or satisfaction of obligations, such as receipts, releases and waivers of liens, claims, security interests or encumbrances arising out of the Contract, to the extent and in such form as may be designated by the Owner. If a Subcontractor refuses to furnish a release or waiver required by the Owner, the Contractor may furnish a bond satisfactory to the Owner to indemnify the Owner against such lien. If such lien remains unsatisfied after payments are made, the Contractor shall refund to the Owner all money that the Owner may be compelled to pay in discharging such lien, including all costs and reasonable attorneys' fees.

§ 9.10.3 If, after Substantial Completion of the Work, final completion thereof is materially delayed through no fault of the Contractor or by issuance of Change Orders affecting final completion, and the Architect so confirms, the Owner shall, upon application by the Contractor and certification by the Architect, and without terminating the Contract, make payment of the balance due for that portion of the Work fully completed and accepted. If the remaining balance for Work not fully completed or corrected is less than retainage stipulated in the Contract Documents, and if bonds have been furnished, the written consent of surety to payment of the balance due for that portion of the Work fully completed and accepted shall be submitted by the Contractor to the Architect prior to certification of such payment. Such payment shall be made under terms and conditions governing final payment, except that it shall not constitute a waiver of claims.

§ 9.10.4 The making of final payment shall constitute a waiver of Claims by the Owner except those arising from

- **.1** liens, Claims, security interests or encumbrances arising out of the Contract and unsettled;
- **.2** failure of the Work to comply with the requirements of the Contract Documents; or
- **.3** terms of special warranties required by the Contract Documents.

§ 9.10.5 Acceptance of final payment by the Contractor, a Subcontractor or material supplier shall constitute a waiver of claims by that payee except those previously made in writing and identified by that payee as unsettled at the time of final Application for Payment.

ARTICLE 10 PROTECTION OF PERSONS AND PROPERTY

§ 10.1 SAFETY PRECAUTIONS AND PROGRAMS

The Contractor shall be responsible for initiating, maintaining and supervising all safety precautions and programs in connection with the performance of the Contract.

§ 10.2 SAFETY OF PERSONS AND PROPERTY

§ 10.2.1 The Contractor shall take reasonable precautions for safety of, and shall provide reasonable protection to prevent damage, injury or loss to

- **.1** employees on the Work and other persons who may be affected thereby;
- **.2** the Work and materials and equipment to be incorporated therein, whether in storage on or off the site, under care, custody or control of the Contractor or the Contractor's Subcontractors or Sub-subcontractors; and

AIA Document A201™ – 2007. Copyright © 1911, 1915, 1918, 1925, 1937, 1951, 1958, 1961, 1963, 1966, 1970, 1976, 1987, 1997 and 2007 by The American Institute of Architects. All rights reserved. WARNING: This AIA® Document is protected by U.S. Copyright Law and International Treaties. Unauthorized reproduction or distribution of this AIA® Document, or any portion of it, may result in severe civil and criminal penalties, and will be prosecuted to the maximum extent possible under the law. This document was produced by AIA software at 15:59:05 on 10/27/2016 under Order No.6372817173_1 which expires on 10/15/2017, and is not for resale.
User Notes:

(1230662987)

.3 other property at the site or adjacent thereto, such as trees, shrubs, lawns, walks, pavements, roadways, structures and utilities not designated for removal, relocation or replacement in the course of construction.

§ 10.2.2 The Contractor shall comply with and give notices required by applicable laws, statutes, ordinances, codes, rules and regulations, and lawful orders of public authorities bearing on safety of persons or property or their protection from damage, injury or loss.

§ 10.2.3 The Contractor shall erect and maintain, as required by existing conditions and performance of the Contract, reasonable safeguards for safety and protection, including posting danger signs and other warnings against hazards, promulgating safety regulations and notifying owners and users of adjacent sites and utilities.

§ 10.2.4 When use or storage of explosives or other hazardous materials or equipment or unusual methods are necessary for execution of the Work, the Contractor shall exercise utmost care and carry on such activities under supervision of properly qualified personnel.

§ 10.2.5 The Contractor shall promptly remedy damage and loss (other than damage or loss insured under property insurance required by the Contract Documents) to property referred to in Sections 10.2.1.2 and 10.2.1.3 caused in whole or in part by the Contractor, a Subcontractor, a Sub-subcontractor, or anyone directly or indirectly employed by any of them, or by anyone for whose acts they may be liable and for which the Contractor is responsible under Sections 10.2.1.2 and 10.2.1.3, except damage or loss attributable to acts or omissions of the Owner or Architect or anyone directly or indirectly employed by either of them, or by anyone for whose acts either of them may be liable, and not attributable to the fault or negligence of the Contractor. The foregoing obligations of the Contractor are in addition to the Contractor's obligations under Section 3.18.

§ 10.2.6 The Contractor shall designate a responsible member of the Contractor's organization at the site whose duty shall be the prevention of accidents. This person shall be the Contractor's superintendent unless otherwise designated by the Contractor in writing to the Owner and Architect.

§ 10.2.7 The Contractor shall not permit any part of the construction or site to be loaded so as to cause damage or create an unsafe condition.

§ 10.2.8 INJURY OR DAMAGE TO PERSON OR PROPERTY
If either party suffers injury or damage to person or property because of an act or omission of the other party, or of others for whose acts such party is legally responsible, written notice of such injury or damage, whether or not insured, shall be given to the other party within a reasonable time not exceeding 21 days after discovery. The notice shall provide sufficient detail to enable the other party to investigate the matter.

§ 10.3 HAZARDOUS MATERIALS
§ 10.3.1 The Contractor is responsible for compliance with any requirements included in the Contract Documents regarding hazardous materials. If the Contractor encounters a hazardous material or substance not addressed in the Contract Documents and if reasonable precautions will be inadequate to prevent foreseeable bodily injury or death to persons resulting from a material or substance, including but not limited to asbestos or polychlorinated biphenyl (PCB), encountered on the site by the Contractor, the Contractor shall, upon recognizing the condition, immediately stop Work in the affected area and report the condition to the Owner and Architect in writing.

§ 10.3.2 Upon receipt of the Contractor's written notice, the Owner shall obtain the services of a licensed laboratory to verify the presence or absence of the material or substance reported by the Contractor and, in the event such material or substance is found to be present, to cause it to be rendered harmless. Unless otherwise required by the Contract Documents, the Owner shall furnish in writing to the Contractor and Architect the names and qualifications of persons or entities who are to perform tests verifying the presence or absence of such material or substance or who are to perform the task of removal or safe containment of such material or substance. The Contractor and the Architect will promptly reply to the Owner in writing stating whether or not either has reasonable objection to the persons or entities proposed by the Owner. If either the Contractor or Architect has an objection to a person or entity proposed by the Owner, the Owner shall propose another to whom the Contractor and the Architect have no reasonable objection. When the material or substance has been rendered harmless, Work in the affected area shall resume upon written agreement of the Owner and Contractor. By Change Order, the Contract Time shall be

AIA Document A201™ – 2007. Copyright © 1911, 1915, 1918, 1925, 1937, 1951, 1958, 1961, 1963, 1966, 1970, 1976, 1987, 1997 and 2007 by The American Institute of Architects. All rights reserved. WARNING: This AIA® Document is protected by U.S. Copyright Law and International Treaties. Unauthorized reproduction or distribution of this AIA® Document, or any portion of it, may result in severe civil and criminal penalties, and will be prosecuted to the maximum extent possible under the law. This document was produced by AIA software at 15:59:05 on 10/27/2016 under Order No.6372817173_1 which expires on 10/15/2017, and is not for resale.
User Notes:

(1230662987)

extended appropriately and the Contract Sum shall be increased in the amount of the Contractor's reasonable additional costs of shut-down, delay and start-up.

§ 10.3.3 To the fullest extent permitted by law, the Owner shall indemnify and hold harmless the Contractor, Subcontractors, Architect, Architect's consultants and agents and employees of any of them from and against claims, damages, losses and expenses, including but not limited to attorneys' fees, arising out of or resulting from performance of the Work in the affected area if in fact the material or substance presents the risk of bodily injury or death as described in Section 10.3.1 and has not been rendered harmless, provided that such claim, damage, loss or expense is attributable to bodily injury, sickness, disease or death, or to injury to or destruction of tangible property (other than the Work itself), except to the extent that such damage, loss or expense is due to the fault or negligence of the party seeking indemnity.

§ 10.3.4 The Owner shall not be responsible under this Section 10.3 for materials or substances the Contractor brings to the site unless such materials or substances are required by the Contract Documents. The Owner shall be responsible for materials or substances required by the Contract Documents, except to the extent of the Contractor's fault or negligence in the use and handling of such materials or substances.

§ 10.3.5 The Contractor shall indemnify the Owner for the cost and expense the Owner incurs (1) for remediation of a material or substance the Contractor brings to the site and negligently handles, or (2) where the Contractor fails to perform its obligations under Section 10.3.1, except to the extent that the cost and expense are due to the Owner's fault or negligence.

§ 10.3.6 If, without negligence on the part of the Contractor, the Contractor is held liable by a government agency for the cost of remediation of a hazardous material or substance solely by reason of performing Work as required by the Contract Documents, the Owner shall indemnify the Contractor for all cost and expense thereby incurred.

§ 10.4 EMERGENCIES

In an emergency affecting safety of persons or property, the Contractor shall act, at the Contractor's discretion, to prevent threatened damage, injury or loss. Additional compensation or extension of time claimed by the Contractor on account of an emergency shall be determined as provided in Article 15 and Article 7.

ARTICLE 11 INSURANCE AND BONDS

§ 11.1 CONTRACTOR'S LIABILITY INSURANCE

§ 11.1.1 The Contractor shall purchase from and maintain in a company or companies lawfully authorized to do business in the jurisdiction in which the Project is located such insurance as will protect the Contractor from claims set forth below which may arise out of or result from the Contractor's operations and completed operations under the Contract and for which the Contractor may be legally liable, whether such operations be by the Contractor or by a Subcontractor or by anyone directly or indirectly employed by any of them, or by anyone for whose acts any of them may be liable:

- **.1** Claims under workers' compensation, disability benefit and other similar employee benefit acts that are applicable to the Work to be performed;
- **.2** Claims for damages because of bodily injury, occupational sickness or disease, or death of the Contractor's employees;
- **.3** Claims for damages because of bodily injury, sickness or disease, or death of any person other than the Contractor's employees;
- **.4** Claims for damages insured by usual personal injury liability coverage;
- **.5** Claims for damages, other than to the Work itself, because of injury to or destruction of tangible property, including loss of use resulting therefrom;
- **.6** Claims for damages because of bodily injury, death of a person or property damage arising out of ownership, maintenance or use of a motor vehicle;
- **.7** Claims for bodily injury or property damage arising out of completed operations; and
- **.8** Claims involving contractual liability insurance applicable to the Contractor's obligations under Section 3.18.

§ 11.1.2 The insurance required by Section 11.1.1 shall be written for not less than limits of liability specified in the Contract Documents or required by law, whichever coverage is greater. Coverages, whether written on an occurrence or claims-made basis, shall be maintained without interruption from the date of commencement of the

AIA Document A201™ – 2007. Copyright © 1911, 1915, 1918, 1925, 1937, 1951, 1958, 1961, 1963, 1966, 1970, 1976, 1987, 1997 and 2007 by The American Institute of Architects. All rights reserved. WARNING: This AIA® Document is protected by U.S. Copyright Law and International Treaties. Unauthorized reproduction or distribution of this AIA® Document, or any portion of it, may result in severe civil and criminal penalties, and will be prosecuted to the maximum extent possible under the law. This document was produced by AIA software at 15:59:05 on 10/27/2016 under Order No.6372817173_1 which expires on 10/15/2017, and is not for resale.
User Notes:
(1230662987)

Work until the date of final payment and termination of any coverage required to be maintained after final payment, and, with respect to the Contractor's completed operations coverage, until the expiration of the period for correction of Work or for such other period for maintenance of completed operations coverage as specified in the Contract Documents.

§ 11.1.3 Certificates of insurance acceptable to the Owner shall be filed with the Owner prior to commencement of the Work and thereafter upon renewal or replacement of each required policy of insurance. These certificates and the insurance policies required by this Section 11.1 shall contain a provision that coverages afforded under the policies will not be canceled or allowed to expire until at least 30 days' prior written notice has been given to the Owner. An additional certificate evidencing continuation of liability coverage, including coverage for completed operations, shall be submitted with the final Application for Payment as required by Section 9.10.2 and thereafter upon renewal or replacement of such coverage until the expiration of the time required by Section 11.1.2. Information concerning reduction of coverage on account of revised limits or claims paid under the General Aggregate, or both, shall be furnished by the Contractor with reasonable promptness.

§ 11.1.4 The Contractor shall cause the commercial liability coverage required by the Contract Documents to include (1) the Owner, the Architect and the Architect's consultants as additional insureds for claims caused in whole or in part by the Contractor's negligent acts or omissions during the Contractor's operations; and (2) the Owner as an additional insured for claims caused in whole or in part by the Contractor's negligent acts or omissions during the Contractor's completed operations.

§ 11.2 OWNER'S LIABILITY INSURANCE

The Owner shall be responsible for purchasing and maintaining the Owner's usual liability insurance.

§ 11.3 PROPERTY INSURANCE

§ 11.3.1 Unless otherwise provided, the Owner shall purchase and maintain, in a company or companies lawfully authorized to do business in the jurisdiction in which the Project is located, property insurance written on a builder's risk "all-risk" or equivalent policy form in the amount of the initial Contract Sum, plus value of subsequent Contract Modifications and cost of materials supplied or installed by others, comprising total value for the entire Project at the site on a replacement cost basis without optional deductibles. Such property insurance shall be maintained, unless otherwise provided in the Contract Documents or otherwise agreed in writing by all persons and entities who are beneficiaries of such insurance, until final payment has been made as provided in Section 9.10 or until no person or entity other than the Owner has an insurable interest in the property required by this Section 11.3 to be covered, whichever is later. This insurance shall include interests of the Owner, the Contractor, Subcontractors and Sub-subcontractors in the Project.

§ 11.3.1.1 Property insurance shall be on an "all-risk" or equivalent policy form and shall include, without limitation, insurance against the perils of fire (with extended coverage) and physical loss or damage including, without duplication of coverage, theft, vandalism, malicious mischief, collapse, earthquake, flood, windstorm, falsework, testing and startup, temporary buildings and debris removal including demolition occasioned by enforcement of any applicable legal requirements, and shall cover reasonable compensation for Architect's and Contractor's services and expenses required as a result of such insured loss.

§ 11.3.1.2 If the Owner does not intend to purchase such property insurance required by the Contract and with all of the coverages in the amount described above, the Owner shall so inform the Contractor in writing prior to commencement of the Work. The Contractor may then effect insurance that will protect the interests of the Contractor, Subcontractors and Sub-subcontractors in the Work, and by appropriate Change Order the cost thereof shall be charged to the Owner. If the Contractor is damaged by the failure or neglect of the Owner to purchase or maintain insurance as described above, without so notifying the Contractor in writing, then the Owner shall bear all reasonable costs properly attributable thereto.

§ 11.3.1.3 If the property insurance requires deductibles, the Owner shall pay costs not covered because of such deductibles.

§ 11.3.1.4 This property insurance shall cover portions of the Work stored off the site, and also portions of the Work in transit.

AIA Document A201™ – 2007. Copyright © 1911, 1915, 1918, 1925, 1937, 1951, 1958, 1961, 1963, 1966, 1970, 1976, 1987, 1997 and 2007 by The American Institute of Architects. All rights reserved. WARNING: This AIA® Document is protected by U.S. Copyright Law and International Treaties. Unauthorized reproduction or distribution of this AIA® Document, or any portion of it, may result in severe civil and criminal penalties, and will be prosecuted to the maximum extent possible under the law. This document was produced by AIA software at 15:59:05 on 10/27/2016 under Order No.6372817173_1 which expires on 10/15/2017, and is not for resale.
User Notes:

(1230662987)

§ 11.3.1.5 Partial occupancy or use in accordance with Section 9.9 shall not commence until the insurance company or companies providing property insurance have consented to such partial occupancy or use by endorsement or otherwise. The Owner and the Contractor shall take reasonable steps to obtain consent of the insurance company or companies and shall, without mutual written consent, take no action with respect to partial occupancy or use that would cause cancellation, lapse or reduction of insurance.

§ 11.3.2 BOILER AND MACHINERY INSURANCE

The Owner shall purchase and maintain boiler and machinery insurance required by the Contract Documents or by law, which shall specifically cover such insured objects during installation and until final acceptance by the Owner; this insurance shall include interests of the Owner, Contractor, Subcontractors and Sub-subcontractors in the Work, and the Owner and Contractor shall be named insureds.

§ 11.3.3 LOSS OF USE INSURANCE

The Owner, at the Owner's option, may purchase and maintain such insurance as will insure the Owner against loss of use of the Owner's property due to fire or other hazards, however caused. The Owner waives all rights of action against the Contractor for loss of use of the Owner's property, including consequential losses due to fire or other hazards however caused.

§ 11.3.4 If the Contractor requests in writing that insurance for risks other than those described herein or other special causes of loss be included in the property insurance policy, the Owner shall, if possible, include such insurance, and the cost thereof shall be charged to the Contractor by appropriate Change Order.

§ 11.3.5 If during the Project construction period the Owner insures properties, real or personal or both, at or adjacent to the site by property insurance under policies separate from those insuring the Project, or if after final payment property insurance is to be provided on the completed Project through a policy or policies other than those insuring the Project during the construction period, the Owner shall waive all rights in accordance with the terms of Section 11.3.7 for damages caused by fire or other causes of loss covered by this separate property insurance. All separate policies shall provide this waiver of subrogation by endorsement or otherwise.

§ 11.3.6 Before an exposure to loss may occur, the Owner shall file with the Contractor a copy of each policy that includes insurance coverages required by this Section 11.3. Each policy shall contain all generally applicable conditions, definitions, exclusions and endorsements related to this Project. Each policy shall contain a provision that the policy will not be canceled or allowed to expire, and that its limits will not be reduced, until at least 30 days' prior written notice has been given to the Contractor.

§ 11.3.7 WAIVERS OF SUBROGATION

The Owner and Contractor waive all rights against (1) each other and any of their subcontractors, sub-subcontractors, agents and employees, each of the other, and (2) the Architect, Architect's consultants, separate contractors described in Article 6, if any, and any of their subcontractors, sub-subcontractors, agents and employees, for damages caused by fire or other causes of loss to the extent covered by property insurance obtained pursuant to this Section 11.3 or other property insurance applicable to the Work, except such rights as they have to proceeds of such insurance held by the Owner as fiduciary. The Owner or Contractor, as appropriate, shall require of the Architect, Architect's consultants, separate contractors described in Article 6, if any, and the subcontractors, sub-subcontractors, agents and employees of any of them, by appropriate agreements, written where legally required for validity, similar waivers each in favor of other parties enumerated herein. The policies shall provide such waivers of subrogation by endorsement or otherwise. A waiver of subrogation shall be effective as to a person or entity even though that person or entity would otherwise have a duty of indemnification, contractual or otherwise, did not pay the insurance premium directly or indirectly, and whether or not the person or entity had an insurable interest in the property damaged.

§ 11.3.8 A loss insured under the Owner's property insurance shall be adjusted by the Owner as fiduciary and made payable to the Owner as fiduciary for the insureds, as their interests may appear, subject to requirements of any applicable mortgagee clause and of Section 11.3.10. The Contractor shall pay Subcontractors their just shares of insurance proceeds received by the Contractor, and by appropriate agreements, written where legally required for validity, shall require Subcontractors to make payments to their Sub-subcontractors in similar manner.

AIA Document A201™ – 2007. Copyright © 1911, 1915, 1918, 1925, 1937, 1951, 1958, 1961, 1963, 1966, 1970, 1976, 1987, 1997 and 2007 by The American Institute of Architects. All rights reserved. WARNING: This AIA® Document is protected by U.S. Copyright Law and International Treaties. Unauthorized reproduction or distribution of this AIA® Document, or any portion of it, may result in severe civil and criminal penalties, and will be prosecuted to the maximum extent possible under the law. This document was produced by AIA software at 15:59:05 on 10/27/2016 under Order No.6372817173_1 which expires on 10/15/2017, and is not for resale.
User Notes:
(1230662987)

§ 11.3.9 If required in writing by a party in interest, the Owner as fiduciary shall, upon occurrence of an insured loss, give bond for proper performance of the Owner's duties. The cost of required bonds shall be charged against proceeds received as fiduciary. The Owner shall deposit in a separate account proceeds so received, which the Owner shall distribute in accordance with such agreement as the parties in interest may reach, or as determined in accordance with the method of binding dispute resolution selected in the Agreement between the Owner and Contractor. If after such loss no other special agreement is made and unless the Owner terminates the Contract for convenience, replacement of damaged property shall be performed by the Contractor after notification of a Change in the Work in accordance with Article 7.

§ 11.3.10 The Owner as fiduciary shall have power to adjust and settle a loss with insurers unless one of the parties in interest shall object in writing within five days after occurrence of loss to the Owner's exercise of this power; if such objection is made, the dispute shall be resolved in the manner selected by the Owner and Contractor as the method of binding dispute resolution in the Agreement. If the Owner and Contractor have selected arbitration as the method of binding dispute resolution, the Owner as fiduciary shall make settlement with insurers or, in the case of a dispute over distribution of insurance proceeds, in accordance with the directions of the arbitrators.

§ 11.4 PERFORMANCE BOND AND PAYMENT BOND

§ 11.4.1 The Owner shall have the right to require the Contractor to furnish bonds covering faithful performance of the Contract and payment of obligations arising thereunder as stipulated in bidding requirements or specifically required in the Contract Documents on the date of execution of the Contract.

§ 11.4.2 Upon the request of any person or entity appearing to be a potential beneficiary of bonds covering payment of obligations arising under the Contract, the Contractor shall promptly furnish a copy of the bonds or shall authorize a copy to be furnished.

ARTICLE 12 UNCOVERING AND CORRECTION OF WORK

§ 12.1 UNCOVERING OF WORK

§ 12.1.1 If a portion of the Work is covered contrary to the Architect's request or to requirements specifically expressed in the Contract Documents, it must, if requested in writing by the Architect, be uncovered for the Architect's examination and be replaced at the Contractor's expense without change in the Contract Time.

§ 12.1.2 If a portion of the Work has been covered that the Architect has not specifically requested to examine prior to its being covered, the Architect may request to see such Work and it shall be uncovered by the Contractor. If such Work is in accordance with the Contract Documents, costs of uncovering and replacement shall, by appropriate Change Order, be at the Owner's expense. If such Work is not in accordance with the Contract Documents, such costs and the cost of correction shall be at the Contractor's expense unless the condition was caused by the Owner or a separate contractor in which event the Owner shall be responsible for payment of such costs.

§ 12.2 CORRECTION OF WORK

§ 12.2.1 BEFORE OR AFTER SUBSTANTIAL COMPLETION

The Contractor shall promptly correct Work rejected by the Architect or failing to conform to the requirements of the Contract Documents, whether discovered before or after Substantial Completion and whether or not fabricated, installed or completed. Costs of correcting such rejected Work, including additional testing and inspections, the cost of uncovering and replacement, and compensation for the Architect's services and expenses made necessary thereby, shall be at the Contractor's expense.

§ 12.2.2 AFTER SUBSTANTIAL COMPLETION

§ 12.2.2.1 In addition to the Contractor's obligations under Section 3.5, if, within one year after the date of Substantial Completion of the Work or designated portion thereof or after the date for commencement of warranties established under Section 9.9.1, or by terms of an applicable special warranty required by the Contract Documents, any of the Work is found to be not in accordance with the requirements of the Contract Documents, the Contractor shall correct it promptly after receipt of written notice from the Owner to do so unless the Owner has previously given the Contractor a written acceptance of such condition. The Owner shall give such notice promptly after discovery of the condition. During the one-year period for correction of Work, if the Owner fails to notify the Contractor and give the Contractor an opportunity to make the correction, the Owner waives the rights to require correction by the Contractor and to make a claim for breach of warranty. If the Contractor fails to correct

AIA Document A201™ – 2007. Copyright © 1911, 1915, 1918, 1925, 1937, 1951, 1958, 1961, 1963, 1966, 1970, 1976, 1987, 1997 and 2007 by The American Institute of Architects. All rights reserved. WARNING: This AIA® Document is protected by U.S. Copyright Law and International Treaties. Unauthorized reproduction or distribution of this AIA® Document, or any portion of it, may result in severe civil and criminal penalties, and will be prosecuted to the maximum extent possible under the law. This document was produced by AIA software at 15:59:05 on 10/27/2016 under Order No.6372817173_1 which expires on 10/15/2017, and is not for resale.
User Notes:
(1230662987)

nonconforming Work within a reasonable time during that period after receipt of notice from the Owner or Architect, the Owner may correct it in accordance with Section 2.4.

§ 12.2.2.2 The one-year period for correction of Work shall be extended with respect to portions of Work first performed after Substantial Completion by the period of time between Substantial Completion and the actual completion of that portion of the Work.

§ 12.2.2.3 The one-year period for correction of Work shall not be extended by corrective Work performed by the Contractor pursuant to this Section 12.2.

§ 12.2.3 The Contractor shall remove from the site portions of the Work that are not in accordance with the requirements of the Contract Documents and are neither corrected by the Contractor nor accepted by the Owner.

§ 12.2.4 The Contractor shall bear the cost of correcting destroyed or damaged construction, whether completed or partially completed, of the Owner or separate contractors caused by the Contractor's correction or removal of Work that is not in accordance with the requirements of the Contract Documents.

§ 12.2.5 Nothing contained in this Section 12.2 shall be construed to establish a period of limitation with respect to other obligations the Contractor has under the Contract Documents. Establishment of the one-year period for correction of Work as described in Section 12.2.2 relates only to the specific obligation of the Contractor to correct the Work, and has no relationship to the time within which the obligation to comply with the Contract Documents may be sought to be enforced, nor to the time within which proceedings may be commenced to establish the Contractor's liability with respect to the Contractor's obligations other than specifically to correct the Work.

§ 12.3 ACCEPTANCE OF NONCONFORMING WORK

If the Owner prefers to accept Work that is not in accordance with the requirements of the Contract Documents, the Owner may do so instead of requiring its removal and correction, in which case the Contract Sum will be reduced as appropriate and equitable. Such adjustment shall be effected whether or not final payment has been made.

ARTICLE 13 MISCELLANEOUS PROVISIONS

§ 13.1 GOVERNING LAW

The Contract shall be governed by the law of the place where the Project is located except that, if the parties have selected arbitration as the method of binding dispute resolution, the Federal Arbitration Act shall govern Section 15.4.

§ 13.2 SUCCESSORS AND ASSIGNS

§ 13.2.1 The Owner and Contractor respectively bind themselves, their partners, successors, assigns and legal representatives to covenants, agreements and obligations contained in the Contract Documents. Except as provided in Section 13.2.2, neither party to the Contract shall assign the Contract as a whole without written consent of the other. If either party attempts to make such an assignment without such consent, that party shall nevertheless remain legally responsible for all obligations under the Contract.

§ 13.2.2 The Owner may, without consent of the Contractor, assign the Contract to a lender providing construction financing for the Project, if the lender assumes the Owner's rights and obligations under the Contract Documents. The Contractor shall execute all consents reasonably required to facilitate such assignment.

§ 13.3 WRITTEN NOTICE

Written notice shall be deemed to have been duly served if delivered in person to the individual, to a member of the firm or entity, or to an officer of the corporation for which it was intended; or if delivered at, or sent by registered or certified mail or by courier service providing proof of delivery to, the last business address known to the party giving notice.

§ 13.4 RIGHTS AND REMEDIES

§ 13.4.1 Duties and obligations imposed by the Contract Documents and rights and remedies available thereunder shall be in addition to and not a limitation of duties, obligations, rights and remedies otherwise imposed or available by law.

AIA Document A201™ – 2007. Copyright © 1911, 1915, 1918, 1925, 1937, 1951, 1958, 1961, 1963, 1966, 1970, 1976, 1987, 1997 and 2007 by The American Institute of Architects. All rights reserved. WARNING: This AIA® Document is protected by U.S. Copyright Law and International Treaties. Unauthorized reproduction or distribution of this AIA® Document, or any portion of it, may result in severe civil and criminal penalties, and will be prosecuted to the maximum extent possible under the law. This document was produced by AIA software at 15:59:05 on 10/27/2016 under Order No 6372817173_1 which expires on 10/15/2017, and is not for resale.
User Notes:
(1230662987)

§ 13.4.2 No action or failure to act by the Owner, Architect or Contractor shall constitute a waiver of a right or duty afforded them under the Contract, nor shall such action or failure to act constitute approval of or acquiescence in a breach there under, except as may be specifically agreed in writing.

§ 13.5 TESTS AND INSPECTIONS

§ 13.5.1 Tests, inspections and approvals of portions of the Work shall be made as required by the Contract Documents and by applicable laws, statutes, ordinances, codes, rules and regulations or lawful orders of public authorities. Unless otherwise provided, the Contractor shall make arrangements for such tests, inspections and approvals with an independent testing laboratory or entity acceptable to the Owner, or with the appropriate public authority, and shall bear all related costs of tests, inspections and approvals. The Contractor shall give the Architect timely notice of when and where tests and inspections are to be made so that the Architect may be present for such procedures. The Owner shall bear costs of (1) tests, inspections or approvals that do not become requirements until after bids are received or negotiations concluded, and (2) tests, inspections or approvals where building codes or applicable laws or regulations prohibit the Owner from delegating their cost to the Contractor.

§ 13.5.2 If the Architect, Owner or public authorities having jurisdiction determine that portions of the Work require additional testing, inspection or approval not included under Section 13.5.1, the Architect will, upon written authorization from the Owner, instruct the Contractor to make arrangements for such additional testing, inspection or approval by an entity acceptable to the Owner, and the Contractor shall give timely notice to the Architect of when and where tests and inspections are to be made so that the Architect may be present for such procedures. Such costs, except as provided in Section 13.5.3, shall be at the Owner's expense.

§ 13.5.3 If such procedures for testing, inspection or approval under Sections 13.5.1 and 13.5.2 reveal failure of the portions of the Work to comply with requirements established by the Contract Documents, all costs made necessary by such failure including those of repeated procedures and compensation for the Architect's services and expenses shall be at the Contractor's expense.

§ 13.5.4 Required certificates of testing, inspection or approval shall, unless otherwise required by the Contract Documents, be secured by the Contractor and promptly delivered to the Architect.

§ 13.5.5 If the Architect is to observe tests, inspections or approvals required by the Contract Documents, the Architect will do so promptly and, where practicable, at the normal place of testing.

§ 13.5.6 Tests or inspections conducted pursuant to the Contract Documents shall be made promptly to avoid unreasonable delay in the Work.

§ 13.6 INTEREST

Payments due and unpaid under the Contract Documents shall bear interest from the date payment is due at such rate as the parties may agree upon in writing or, in the absence thereof, at the legal rate prevailing from time to time at the place where the Project is located.

§ 13.7 TIME LIMITS ON CLAIMS

The Owner and Contractor shall commence all claims and causes of action, whether in contract, tort, breach of warranty or otherwise, against the other arising out of or related to the Contract in accordance with the requirements of the final dispute resolution method selected in the Agreement within the time period specified by applicable law, but in any case not more than 10 years after the date of Substantial Completion of the Work. The Owner and Contractor waive all claims and causes of action not commenced in accordance with this Section 13.7.

ARTICLE 14 TERMINATION OR SUSPENSION OF THE CONTRACT

§ 14.1 TERMINATION BY THE CONTRACTOR

§ 14.1.1 The Contractor may terminate the Contract if the Work is stopped for a period of 30 consecutive days through no act or fault of the Contractor or a Subcontractor, Sub-subcontractor or their agents or employees or any other persons or entities performing portions of the Work under direct or indirect contract with the Contractor, for any of the following reasons:

.1 Issuance of an order of a court or other public authority having jurisdiction that requires all Work to be stopped;

AIA Document A201™ – 2007. Copyright © 1911, 1915, 1918, 1925, 1937, 1951, 1958, 1961, 1963, 1966, 1970, 1976, 1987, 1997 and 2007 by The American Institute of Architects. All rights reserved. WARNING: This AIA® Document is protected by U.S. Copyright Law and International Treaties. Unauthorized reproduction or distribution of this AIA® Document, or any portion of it, may result in severe civil and criminal penalties, and will be prosecuted to the maximum extent possible under the law. This document was produced by AIA software at 15:59:05 on 10/27/2016 under Order No 6372817173_1 which expires on 10/15/2017, and is not for resale.
User Notes:

(1230662987)

.2 An act of government, such as a declaration of national emergency that requires all Work to be stopped;

.3 Because the Architect has not issued a Certificate for Payment and has not notified the Contractor of the reason for withholding certification as provided in Section 9.4.1, or because the Owner has not made payment on a Certificate for Payment within the time stated in the Contract Documents; or

.4 The Owner has failed to furnish to the Contractor promptly, upon the Contractor's request, reasonable evidence as required by Section 2.2.1.

§ 14.1.2 The Contractor may terminate the Contract if, through no act or fault of the Contractor or a Subcontractor, Sub-subcontractor or their agents or employees or any other persons or entities performing portions of the Work under direct or indirect contract with the Contractor, repeated suspensions, delays or interruptions of the entire Work by the Owner as described in Section 14.3 constitute in the aggregate more than 100 percent of the total number of days scheduled for completion, or 120 days in any 365-day period, whichever is less.

§ 14.1.3 If one of the reasons described in Section 14.1.1 or 14.1.2 exists, the Contractor may, upon seven days' written notice to the Owner and Architect, terminate the Contract and recover from the Owner payment for Work executed, including reasonable overhead and profit, costs incurred by reason of such termination, and damages.

§ 14.1.4 If the Work is stopped for a period of 60 consecutive days through no act or fault of the Contractor or a Subcontractor or their agents or employees or any other persons performing portions of the Work under contract with the Contractor because the Owner has repeatedly failed to fulfill the Owner's obligations under the Contract Documents with respect to matters important to the progress of the Work, the Contractor may, upon seven additional days' written notice to the Owner and the Architect, terminate the Contract and recover from the Owner as provided in Section 14.1.3.

§ 14.2 TERMINATION BY THE OWNER FOR CAUSE

§ 14.2.1 The Owner may terminate the Contract if the Contractor

.1 repeatedly refuses or fails to supply enough properly skilled workers or proper materials;

.2 fails to make payment to Subcontractors for materials or labor in accordance with the respective agreements between the Contractor and the Subcontractors;

.3 repeatedly disregards applicable laws, statutes, ordinances, codes, rules and regulations, or lawful orders of a public authority; or

.4 otherwise is guilty of substantial breach of a provision of the Contract Documents.

§ 14.2.2 When any of the above reasons exist, the Owner, upon certification by the Initial Decision Maker that sufficient cause exists to justify such action, may without prejudice to any other rights or remedies of the Owner and after giving the Contractor and the Contractor's surety, if any, seven days' written notice, terminate employment of the Contractor and may, subject to any prior rights of the surety:

.1 Exclude the Contractor from the site and take possession of all materials, equipment, tools, and construction equipment and machinery thereon owned by the Contractor;

.2 Accept assignment of subcontracts pursuant to Section 5.4; and

.3 Finish the Work by whatever reasonable method the Owner may deem expedient. Upon written request of the Contractor, the Owner shall furnish to the Contractor a detailed accounting of the costs incurred by the Owner in finishing the Work.

§ 14.2.3 When the Owner terminates the Contract for one of the reasons stated in Section 14.2.1, the Contractor shall not be entitled to receive further payment until the Work is finished.

§ 14.2.4 If the unpaid balance of the Contract Sum exceeds costs of finishing the Work, including compensation for the Architect's services and expenses made necessary thereby, and other damages incurred by the Owner and not expressly waived, such excess shall be paid to the Contractor. If such costs and damages exceed the unpaid balance, the Contractor shall pay the difference to the Owner. The amount to be paid to the Contractor or Owner, as the case may be, shall be certified by the Initial Decision Maker, upon application, and this obligation for payment shall survive termination of the Contract.

AIA Document A201™ – 2007. Copyright © 1911, 1915, 1918, 1925, 1937, 1951, 1958, 1961, 1963, 1966, 1970, 1976, 1987, 1997 and 2007 by The American Institute of Architects. All rights reserved. WARNING: This AIA® Document is protected by U.S. Copyright Law and International Treaties. Unauthorized reproduction or distribution of this AIA® Document, or any portion of it, may result in severe civil and criminal penalties, and will be prosecuted to the maximum extent possible under the law. This document was produced by AIA software at 15:59:05 on 10/27/2016 under Order No.6372817173_1 which expires on 10/15/2017, and is not for resale.
User Notes:
(1230662987)

§ 14.3 SUSPENSION BY THE OWNER FOR CONVENIENCE

§ 14.3.1 The Owner may, without cause, order the Contractor in writing to suspend, delay or interrupt the Work in whole or in part for such period of time as the Owner may determine.

§ 14.3.2 The Contract Sum and Contract Time shall be adjusted for increases in the cost and time caused by suspension, delay or interruption as described in Section 14.3.1. Adjustment of the Contract Sum shall include profit. No adjustment shall be made to the extent

- .1 that performance is, was or would have been so suspended, delayed or interrupted by another cause for which the Contractor is responsible; or
- .2 that an equitable adjustment is made or denied under another provision of the Contract.

§ 14.4 TERMINATION BY THE OWNER FOR CONVENIENCE

§ 14.4.1 The Owner may, at any time, terminate the Contract for the Owner's convenience and without cause.

§ 14.4.2 Upon receipt of written notice from the Owner of such termination for the Owner's convenience, the Contractor shall

- .1 cease operations as directed by the Owner in the notice;
- .2 take actions necessary, or that the Owner may direct, for the protection and preservation of the Work; and
- .3 except for Work directed to be performed prior to the effective date of termination stated in the notice, terminate all existing subcontracts and purchase orders and enter into no further subcontracts and purchase orders.

§ 14.4.3 In case of such termination for the Owner's convenience, the Contractor shall be entitled to receive payment for Work executed, and costs incurred by reason of such termination, along with reasonable overhead and profit on the Work not executed.

ARTICLE 15 CLAIMS AND DISPUTES

§ 15.1 CLAIMS

§ 15.1.1 DEFINITION

A Claim is a demand or assertion by one of the parties seeking, as a matter of right, payment of money, or other relief with respect to the terms of the Contract. The term "Claim" also includes other disputes and matters in question between the Owner and Contractor arising out of or relating to the Contract. The responsibility to substantiate Claims shall rest with the party making the Claim.

§ 15.1.2 NOTICE OF CLAIMS

Claims by either the Owner or Contractor must be initiated by written notice to the other party and to the Initial Decision Maker with a copy sent to the Architect, if the Architect is not serving as the Initial Decision Maker. Claims by either party must be initiated within 21 days after occurrence of the event giving rise to such Claim or within 21 days after the claimant first recognizes the condition giving rise to the Claim, whichever is later.

§ 15.1.3 CONTINUING CONTRACT PERFORMANCE

Pending final resolution of a Claim, except as otherwise agreed in writing or as provided in Section 9.7 and Article 14, the Contractor shall proceed diligently with performance of the Contract and the Owner shall continue to make payments in accordance with the Contract Documents. The Architect will prepare Change Orders and issue Certificates for Payment in accordance with the decisions of the Initial Decision Maker.

§ 15.1.4 CLAIMS FOR ADDITIONAL COST

If the Contractor wishes to make a Claim for an increase in the Contract Sum, written notice as provided herein shall be given before proceeding to execute the Work. Prior notice is not required for Claims relating to an emergency endangering life or property arising under Section 10.4.

§ 15.1.5 CLAIMS FOR ADDITIONAL TIME

§ 15.1.5.1 If the Contractor wishes to make a Claim for an increase in the Contract Time, written notice as provided herein shall be given. The Contractor's Claim shall include an estimate of cost and of probable effect of delay on progress of the Work. In the case of a continuing delay, only one Claim is necessary.

AIA Document A201™ – 2007. Copyright © 1911, 1915, 1918, 1925, 1937, 1951, 1958, 1961, 1963, 1966, 1970, 1976, 1987, 1997 and 2007 by The American Institute of Architects. All rights reserved. WARNING: This AIA® Document is protected by U.S. Copyright Law and International Treaties. Unauthorized reproduction or distribution of this AIA® Document, or any portion of it, may result in severe civil and criminal penalties, and will be prosecuted to the maximum extent possible under the law. This document was produced by AIA software at 15:59:05 on 10/27/2016 under Order No.6372817173_1 which expires on 10/15/2017, and is not for resale.
User Notes:
(1230662987)

§ 15.1.5.2 If adverse weather conditions are the basis for a Claim for additional time, such Claim shall be documented by data substantiating that weather conditions were abnormal for the period of time, could not have been reasonably anticipated and had an adverse effect on the scheduled construction.

§ 15.1.6 CLAIMS FOR CONSEQUENTIAL DAMAGES

The Contractor and Owner waive Claims against each other for consequential damages arising out of or relating to this Contract. This mutual waiver includes

.1 damages incurred by the Owner for rental expenses, for losses of use, income, profit, financing, business and reputation, and for loss of management or employee productivity or of the services of such persons; and

.2 damages incurred by the Contractor for principal office expenses including the compensation of personnel stationed there, for losses of financing, business and reputation, and for loss of profit except anticipated profit arising directly from the Work.

This mutual waiver is applicable, without limitation, to all consequential damages due to either party's termination in accordance with Article 14. Nothing contained in this Section 15.1.6 shall be deemed to preclude an award of liquidated damages, when applicable, in accordance with the requirements of the Contract Documents.

§ 15.2 INITIAL DECISION

§ 15.2.1 Claims, excluding those arising under Sections 10.3, 10.4, 11.3.9, and 11.3.10, shall be referred to the Initial Decision Maker for initial decision. The Architect will serve as the Initial Decision Maker, unless otherwise indicated in the Agreement. Except for those Claims excluded by this Section 15.2.1, an initial decision shall be required as a condition precedent to mediation of any Claim arising prior to the date final payment is due, unless 30 days have passed after the Claim has been referred to the Initial Decision Maker with no decision having been rendered. Unless the Initial Decision Maker and all affected parties agree, the Initial Decision Maker will not decide disputes between the Contractor and persons or entities other than the Owner.

§ 15.2.2 The Initial Decision Maker will review Claims and within ten days of the receipt of a Claim take one or more of the following actions: (1) request additional supporting data from the claimant or a response with supporting data from the other party, (2) reject the Claim in whole or in part, (3) approve the Claim, (4) suggest a compromise, or (5) advise the parties that the Initial Decision Maker is unable to resolve the Claim if the Initial Decision Maker lacks sufficient information to evaluate the merits of the Claim or if the Initial Decision Maker concludes that, in the Initial Decision Maker's sole discretion, it would be inappropriate for the Initial Decision Maker to resolve the Claim.

§ 15.2.3 In evaluating Claims, the Initial Decision Maker may, but shall not be obligated to, consult with or seek information from either party or from persons with special knowledge or expertise who may assist the Initial Decision Maker in rendering a decision. The Initial Decision Maker may request the Owner to authorize retention of such persons at the Owner's expense.

§ 15.2.4 If the Initial Decision Maker requests a party to provide a response to a Claim or to furnish additional supporting data, such party shall respond, within ten days after receipt of such request, and shall either (1) provide a response on the requested supporting data, (2) advise the Initial Decision Maker when the response or supporting data will be furnished or (3) advise the Initial Decision Maker that no supporting data will be furnished. Upon receipt of the response or supporting data, if any, the Initial Decision Maker will either reject or approve the Claim in whole or in part.

§ 15.2.5 The Initial Decision Maker will render an initial decision approving or rejecting the Claim, or indicating that the Initial Decision Maker is unable to resolve the Claim. This initial decision shall (1) be in writing; (2) state the reasons therefor; and (3) notify the parties and the Architect, if the Architect is not serving as the Initial Decision Maker, of any change in the Contract Sum or Contract Time or both. The initial decision shall be final and binding on the parties but subject to mediation and, if the parties fail to resolve their dispute through mediation, to binding dispute resolution.

§ 15.2.6 Either party may file for mediation of an initial decision at any time, subject to the terms of Section 15.2.6.1.

AIA Document A201™ – 2007. Copyright © 1911, 1915, 1918, 1925, 1937, 1951, 1958, 1961, 1963, 1966, 1970, 1976, 1987, 1997 and 2007 by The American Institute of Architects. All rights reserved. WARNING: This AIA® Document is protected by U.S. Copyright Law and International Treaties. Unauthorized reproduction or distribution of this AIA® Document, or any portion of it, may result in severe civil and criminal penalties, and will be prosecuted to the maximum extent possible under the law. This document was produced by AIA software at 15:59:05 on 10/27/2016 under Order No.6372817173_1 which expires on 10/15/2017, and is not for resale.
User Notes:

(1230662987)

§ 15.2.6.1 Either party may, within 30 days from the date of an initial decision, demand in writing that the other party file for mediation within 60 days of the initial decision. If such a demand is made and the party receiving the demand fails to file for mediation within the time required, then both parties waive their rights to mediate or pursue binding dispute resolution proceedings with respect to the initial decision.

§ 15.2.7 In the event of a Claim against the Contractor, the Owner may, but is not obligated to, notify the surety, if any, of the nature and amount of the Claim. If the Claim relates to a possibility of a Contractor's default, the Owner may, but is not obligated to, notify the surety and request the surety's assistance in resolving the controversy.

§ 15.2.8 If a Claim relates to or is the subject of a mechanic's lien, the party asserting such Claim may proceed in accordance with applicable law to comply with the lien notice or filing deadlines.

§ 15.3 MEDIATION

§ 15.3.1 Claims, disputes, or other matters in controversy arising out of or related to the Contract except those waived as provided for in Sections 9.10.4, 9.10.5, and 15.1.6 shall be subject to mediation as a condition precedent to binding dispute resolution.

§ 15.3.2 The parties shall endeavor to resolve their Claims by mediation which, unless the parties mutually agree otherwise, shall be administered by the American Arbitration Association in accordance with its Construction Industry Mediation Procedures in effect on the date of the Agreement. A request for mediation shall be made in writing, delivered to the other party to the Contract, and filed with the person or entity administering the mediation. The request may be made concurrently with the filing of binding dispute resolution proceedings but, in such event, mediation shall proceed in advance of binding dispute resolution proceedings, which shall be stayed pending mediation for a period of 60 days from the date of filing, unless stayed for a longer period by agreement of the parties or court order. If an arbitration is stayed pursuant to this Section 15.3.2, the parties may nonetheless proceed to the selection of the arbitrator(s) and agree upon a schedule for later proceedings.

§ 15.3.3 The parties shall share the mediator's fee and any filing fees equally. The mediation shall be held in the place where the Project is located, unless another location is mutually agreed upon. Agreements reached in mediation shall be enforceable as settlement agreements in any court having jurisdiction thereof.

§ 15.4 ARBITRATION

§ 15.4.1 If the parties have selected arbitration as the method for binding dispute resolution in the Agreement, any Claim subject to, but not resolved by, mediation shall be subject to arbitration which, unless the parties mutually agree otherwise, shall be administered by the American Arbitration Association in accordance with its Construction Industry Arbitration Rules in effect on the date of the Agreement. A demand for arbitration shall be made in writing, delivered to the other party to the Contract, and filed with the person or entity administering the arbitration. The party filing a notice of demand for arbitration must assert in the demand all Claims then known to that party on which arbitration is permitted to be demanded.

§ 15.4.1.1 A demand for arbitration shall be made no earlier than concurrently with the filing of a request for mediation, but in no event shall it be made after the date when the institution of legal or equitable proceedings based on the Claim would be barred by the applicable statute of limitations. For statute of limitations purposes, receipt of a written demand for arbitration by the person or entity administering the arbitration shall constitute the institution of legal or equitable proceedings based on the Claim.

§ 15.4.2 The award rendered by the arbitrator or arbitrators shall be final, and judgment may be entered upon it in accordance with applicable law in any court having jurisdiction thereof.

§ 15.4.3 The foregoing agreement to arbitrate and other agreements to arbitrate with an additional person or entity duly consented to by parties to the Agreement shall be specifically enforceable under applicable law in any court having jurisdiction thereof.

§ 15.4.4 CONSOLIDATION OR JOINDER

§ 15.4.4.1 Either party, at its sole discretion, may consolidate an arbitration conducted under this Agreement with any other arbitration to which it is a party provided that (1) the arbitration agreement governing the other arbitration

AIA Document A201™ – 2007. Copyright © 1911, 1915, 1918, 1925, 1937, 1951, 1958, 1961, 1963, 1966, 1970, 1976, 1987, 1997 and 2007 by The American Institute of Architects. All rights reserved. WARNING: This AIA® Document is protected by U.S. Copyright Law and International Treaties. Unauthorized reproduction or distribution of this AIA® Document, or any portion of it, may result in severe civil and criminal penalties, and will be prosecuted to the maximum extent possible under the law. This document was produced by AIA software at 15:59:05 on 10/27/2016 under Order No.6372817173_1 which expires on 10/15/2017, and is not for resale.
User Notes:

(1230662987)

permits consolidation, (2) the arbitrations to be consolidated substantially involve common questions of law or fact, and (3) the arbitrations employ materially similar procedural rules and methods for selecting arbitrator(s).

§ 15.4.4.2 Either party, at its sole discretion, may include by joinder persons or entities substantially involved in a common question of law or fact whose presence is required if complete relief is to be accorded in arbitration, provided that the party sought to be joined consents in writing to such joinder. Consent to arbitration involving an additional person or entity shall not constitute consent to arbitration of any claim, dispute or other matter in question not described in the written consent.

§ 15.4.4.3 The Owner and Contractor grant to any person or entity made a party to an arbitration conducted under this Section 15.4, whether by joinder or consolidation, the same rights of joinder and consolidation as the Owner and Contractor under this Agreement.

AIA Document A201™ – 2007. Copyright © 1911, 1915, 1918, 1925, 1937, 1951, 1958, 1961, 1963, 1966, 1970, 1976, 1987, 1997 and 2007 by The American Institute of Architects. All rights reserved. WARNING: This AIA® Document is protected by U.S. Copyright Law and International Treaties. Unauthorized reproduction or distribution of this AIA® Document, or any portion of it, may result in severe civil and criminal penalties, and will be prosecuted to the maximum extent possible under the law. This document was produced by AIA software at 15:59:05 on 10/27/2016 under Order No.6372817173_1 which expires on 10/15/2017, and is not for resale.
User Notes:
(1230662987)

GENERAL

A. RELATED DOCUMENTS

AIA Document A 201 "General Conditions of the Contract for Construction", (Sixteenth Edition, Copyright 2007, The American Institute of Architects, Articles 1 through 15) and the Town of West Hartford's Supplementary General Conditions (Section 00402 Articles 1-15) are bound herein, and are hereby made a part of the Contract Bidding Documents and shall apply to all Contractors and Subcontractors.

B. AMENDMENTS TO THE GENERAL CONDITIONS

a. The Supplementary General Conditions include:

1. Any and all revisions to, deletions from, replacement of, and additions to portions of the AIA General Conditions, Articles 1 through 15.

2. Such additional articles beyond Article 15 as may be included herein.

b. Certain articles of the AIA General Conditions, or portions thereof, are revised by, are deleted, are replaced by, or are supplemented by the requirements of the following Supplementary Conditions. Such revisions, deletions, replacements, or additions shall take precedence over the AIA General Conditions.

c. Where any such Article is revised, deleted, or replaced, the provisions of such Article not so specifically revised, deleted or replaced shall remain in effect.

d. The following paragraphs are numbered in sequence corresponding to those of the General Conditions. Revised paragraphs and clauses have the same numerical designations occurring in the General Conditions. Additions to paragraphs, sub-paragraphs and clauses are numbered in sequence.

ARTICLE 1 – GENERAL PROVISIONS

1.1.1 Delete the word "not" on line 7 so that the sentence begins "The Contract Documents do include."

1.1.3 Add the following words after the word "obligations" in line 3:

or to be provided by Subcontractors, material suppliers, or any other entity for whom the Contractor is responsible under or pursuant to the Contract Documents.

1.2.4 Add new subparagraph 1.2.4 as follows:

In case of any conflict or inconsistency among the Contract Documents, the Architect's decision shall govern. If there is any inconsistency in the Drawings, or between the Drawings and the Specifications, unless otherwise ordered in writing by the Architect or the Owner, the Contractor shall provide the better quality of, or the greater quantity of, work or materials.

1.2.5 Add new subparagraph 1.2.5 as follows:

Where a typical or representative detail is shown on the Drawings, such detail shall constitute the standard of workmanship and materials throughout corresponding portions of the Work. Where necessary, the Contractor shall adopt such detail for use in said corresponding portions of the Work in a manner that is satisfactory to the Architect.

1.5.1 Add the following after the first sentence:

Such drawings, specifications, other documents and copies thereof are and shall remain the joint property of the Architect and Owner.

ARTICLE 2 - OWNER

2.2.1 Delete third and forth sentences.

2.2.2 Add the following at the end of 2.2.2 "unless otherwise provided in the contract documents."

2.2.3 Delete the words "and utility locations" on line 1.

2.2.4 Delete the second sentence of 2.2.4.

2.2.5 Delete subparagraph 2.2.5 in its' entirety and substitute with the following:

The Contractor will be furnished up to fifteen (15) sets of the Contract Bidding Documents at no charge.

2.3 Change subparagraph 2.3 as follows:

Delete the word "repeatedly" in line 2.
Add the following at the end of 2.3:

The Owner's right to order the Contractor to stop the Work shall not relieve the Contractor of any of his responsibilities and obligations under or pursuant to the Contract Documents.

2.5 Add new paragraph 2.5 as follows:

2.5 - Additional Rights

The rights stated in Article 2 shall be in addition to and shall not be in limitation of any other rights of the Owner granted in the Contract Documents or at law or in equity.

ARTICLE 3 - CONTRACTOR

3.2.2 Delete subparagraph 3.2.2 in its' entirety and substitute with the following:

The Contractor shall carefully study and compare the Contract Documents with each other and with information furnished by the Owner pursuant to subparagraph 2.2.3 and 3.2.3 and shall at once report to the Architect errors, inconsistencies or omissions discovered, or any variance from applicable laws, statutes, ordinances, building codes, rules, regulations or any lawful orders of any governmental body, or public or quasi-public authority. The Contractor shall not be liable to the Owner or Architect for damage resulting from errors, inconsistencies or omissions in the Contract Documents unless the Contractor recognized or should have recognized such error, inconsistency or omission and failed to report it to the Architect. If the Contractor performs any construction activity knowing it involves a recognized error, inconsistency or omission in the Contract Documents without such notice to the Architect, the Contractor shall assume responsibility for such performance and shall bear an appropriate amount of the attributable costs for correction.

3.2.3 Delete subparagraph 3.2.3 in its' entirety and substitute with the following:

The Contractor shall take field measurements and verify field conditions and shall carefully compare such field measurements and conditions and other information known to the Contractor with the Contract Documents before commencing activities. Errors, inconsistencies or omissions discovered shall be reported to the Architect at once. After reporting to the Architect any error, inconsistency or omission the Contractor may discover in the Contract Documents, the Contractor shall not proceed with any work so affected without the Architect's written modifications to the Contract Documents.

3.2.4 Delete subparagraph 3.2.4 in its' entirety and substitute with the following:

The Contractor shall fully comply, or assure full compliance by Subcontractors or others under his direction, with Connecticut General Statutes Section 16-345, et seq. ("Call Before You Dig") and the regulations pertaining thereto. The Contractor shall be responsible to make certain of the exact location of the public and private mains, ducts, poles and utility services prior to excavation. The utility mains, ducts,

poles and services in the construction area where referred to on the Project plans or elsewhere in the Contract Documents are at the approximate locations furnished by various Utilities concerned. These locations are subject to possible errors in the source of the information and also errors in transcription. Connecticut General Statutes Section 16-349, as amended, makes it mandatory to notify Utilities of any proposed excavation, discharge of explosives, or demolition within the purview of Connecticut General Statutes Section 16-345, et seq. The Contractor shall call 1-800-922-4455 (toll free), 7:00 A.M. to 6:00 P.M., Monday through Friday, at least forty-eight hours prior to beginning the excavation, discharge of explosives, or demolition. The Owner shall be notified in a similar manner. This "Call Before You Dig" service is provided by the Utility companies. Once the call is made, it is the utilities' responsibility to analyze the site and identify and mark their underground facilities. Privately or Town-owned utility mains, ducts, poles and services may be located in the construction area and the Contractor shall contact the Architect to verify their existence and location.

3.3.1 Delete the last sentence of subparagraph 3.3.1 and add the following:

Should the Contractor fail to perform his work to the satisfaction of the Architect and Owner, the Architect and Owner have the right to order that all work must stop until the work is rectified.

3.3.4 Add new subparagraph 3.3.4 as follows:

The Contractor will be required to attend weekly Project Meetings from the time the Agreement is executed until Final Acceptance.

3.4.4 Add new subparagraph 3.4.4 as follows:

The Contractor is encouraged to use local labor where feasible, but not when it is at the expense of poor workmanship and/or higher costs. The Contractor shall not discriminate or permit discrimination in employment or in the award of sub-contracts or in the selection of materials suppliers, in any manner prohibited by the laws and regulations of the United States, the State of Connecticut or the Town of West Hartford.

3.5 Add the words "or Owner" after the word "Architect" in line 8.

3.6 Delete subparagraph 3.6 in its' entirety and substitute the following:

No amount shall be included in the Bid for Connecticut Sales or Service Taxes or for Federal Excise Tax on materials or supplies purchased for this project. If applicable, the owner shall provide tax exempt documentation for the contractor's records.

3.7.2 Add the following sentence: A copy of the State license for general and major Subcontractors issued in accordance with C.G.S Section 20-341gg shall be furnished to the Owner upon request.

3.7.4 Add the following before the word "If" on line 1: "Except as in regards to claims relating to hazardous materials which are discussed in Article 3.7.8.."

Line 6, place a period after disturbed and delete rest of sentence.

If the Contractor performs work contrary to laws, statutes, ordinances, building codes, and rules and regulations, the Contractor shall assume responsibility for such work and shall bear the costs attributable to correction.

3.7.6 Add new subparagraph 3.7.6 as follows:

The requirements of subparagraphs preceding do not waive the Contractor's responsibility of complying with the requirements of the contract documents, when such regulations and requirements exceed those of any laws, ordinances, rules, regulations, and orders of any public authority bearing on the work.

3.7.7 Add new subparagraph 3.7.7 as follows:

The Town of West Hartford Building Permit Fee will be waived, however, the General Contractor must apply for the Building Permit, and in all other ways comply with procedures of the office of the Building Official for the Town of West Hartford.

3.7.8 Add new subparagraph 3.7.8 as follows:

The Owner and Architect shall bear no responsibility to the Contractor, or sub-contractor(s) for any delay damages claimed to have resulted from activities claimed to relate to the detection, abatement, or handling of hazardous materials known to exist or subsequently discovered upon the premises. The sole remedy of the Contractor under such circumstances shall be an appropriate extension of contract completion time. No damages shall be paid by the Architect or Owner, their agents, servants or independent Contractors as a result of any such claim.

3.12.10 Delete the word "properly" in line 9 and substitute the word "Connecticut".

3.17 Delete subparagraph 3.17 and substitute with the following:

The Contractor shall pay all royalties and license fees. The Contractor shall defend all suits or claims for infringement of any copyrights and patent rights and shall hold the Owner harmless from loss (including, but not limited to, attorneys' fees and any litigation expenses) unless a particular design, process or the product of a particular

manufacturer or manufacturers is specified in the Contract Documents or where copyright violations are contained in Drawings, Specifications or other documents prepared by the Owner or Architect; provided, however, that if the Contractor has reason to believe that the design, process or product specified is an infringement of a copyright or a patent, the Contractor shall be responsible for such loss unless the Contractor promptly gives such information to the Architect and Owner.

3.18.1 Delete subparagraph 3.18.1 in its entirety and replace the original language with the attached Indemnification and Insurance Exhibit which shall be fully incorporated by reference into this Agreement:

ARTICLE 4 - ARCHITECT

4.1.2 Delete subparagraph 4.1.2 in its' entirety and substitute the following:

Duties, responsibilities and limitations of authority of the Architect as set forth in the Contract Documents shall not be restricted, modified or extended without written agreement of the Owner and Architect. The Contractor shall be notified of such restriction, modification or extension in writing.

4.1.3 Delete the words "as to whom the Contractor makes no reasonable objection and".

ARTICLE 5 - SUB-CONTRACTORS

5.2.1 Delete the word "after" on the second line and substitute with the words "prior to" award.

5.2.3 Delete subparagraph 5.2.3 in its entirety and substitute the following:

If the Owner or Architect has reasonable objection to a person or entity proposed by the Contractor, the Contractor shall propose another to whom the Owner or Architect has no reasonable objection. If no suitable substitute is agreed upon, the Owner will allow the Contractor to withdraw its bid without penalty.

ARTICLE 6 - CONSTRUCTION BY OWNER OR BY SEPARATE CONTRACTORS

6.1.1 Add the word "unreasonable" before the word "delay" in the last sentence, line 4.

6.1.4 Delete subparagraph 6.1.4 in its' entirety.

6.2.3 Delete the second sentence of subparagraph 6.2.3.

6.2.4 Delete the word "wrongfully" on line 1.

ARTICLE 7 - CHANGES IN THE WORK

7.3.3 Delete subparagraph 7.3.3.1 - 7.3.3.4 and substitute with the following:

.1 Unit prices stated in the Contract Documents or subsequently agreed upon.

.2 In the absence of unit prices, the mutual acceptance of a lump sum properly itemized and supported by sufficient substantiating data to permit evaluation, to be determined as follows:

A. The cost of labor performed and material used by the Contractor with his own forces.

B. The cost of Worker's Compensation, Federal Social Security, and Connecticut Unemployment Compensation at established rates, actual additional cost of payment and performance bonds.

C. Actual cost of rental rates for equipment (exclusive of hand tools) employed and used directly on the work.

D. Fifteen percent (15%) of (A), (B), and (C) above mentioned for overhead, superintendence and profit. However, if the work to be performed results in a credit to the Owner, no percentage of overhead and profit will apply.

E. On work to be performed by a Subcontractor, the Contractor's allowance, for overhead superintendence and profit, is to be ten percent (10%) applied to total cost of Subcontractor's work, including his allowance as per paragraph G.

F. On any changes involving the Contractor, Subcontractor or any Contractor of theirs, their total cost and/or omissions shall be combined as one before the application of the percentage allowed for the Contractor's overhead, superintendence and profit in accordance with paragraph E above.

G. On work to be performed by a Subcontractor, the Subcontractor's allowance is to be fifteen percent (15%) for his overhead, superintendence and profit applied to paragraphs A, B, and C.

H. The Contractor, when performing the work under A, B and C above shall, when requested, promptly furnish in a form satisfactory to the Owner, itemized statements of the cost of the work so ordered, including but not limited to, certified payrolls and copies of accounts, bills and vouchers to substantiate the above estimates.

7.3.4 Delete the word "shall" in line 4 and substitute the word "may".

7.3.7 Delete subparagraph 7.3.7 and substitute with the following:

If the Contractor does not respond promptly or disagrees with the method of adjustment in the Contract Sum, the method and adjustment shall be determined by the Architect in accordance with subparagraph 7.3.3. Under subparagraph 7.3.3 the Contractor shall keep and present, in such form as the Architect may prescribe, an itemized accounting together with appropriate supporting data.

7.3.8 Add the following sentence at the beginning of subparagraph 7.3.8:

"Pending final determination of cost to the Owner, amounts not in dispute may be included in Application for Payment."

7.3.9 Delete subparagraph 7.3.9 in its' entirety and substitute the following:

"If the Owner and Contractor do not agree with the adjustment in Contract Time or the method for determining it, the adjustment or the method shall be referred to the Architect for determination."

ARTICLE 8 - TIME

8.2.1 Delete second sentence only and change to read as follows:

By executing the Agreement the Contractor confirms that the Contract Time is a reasonable period for performing the Work and that he is capable of properly completing the Work within the Contract Time.

8.3.1 Delete the words "and arbitration" on line 4 and substitute with the words "or resolution of claims or disputes".

ARTICLE 9 – PAYMENTS AND COMPLETION

9.2 Add the words "and the Owner" after the word Architect on line 2 and add the words "or the Owner" after the word Architect on line 4.

9.2.1 Add subparagraph 9.2.1 as follows:

The Schedule of Values to be submitted by the Contractor, will include, as a minimum, a separate line item for each Division of the Specifications. Any allowances called for in the Drawings and Specifications will be shown as a separate line item. Additional items to be listed may be required by the Architect.

9.3.1 Delete subparagraph 9.3.1 in its' entirety and substitute with the following:

Not later than the first day of each calendar month, the Contractor shall submit to the Architect an itemized Application for Payment for work performed during the previous month, notarized, supported by such data substantiating the Contractor's

right to payment as the Owner or the Architect may require, and reflecting retainage, if any, as provided elsewhere in the Contract Documents.

9.3.1.1 Delete 9.3.1.1 in its' entirety and substitute with the following:

In order to expedite monthly payments during the course of the project, the Contractor shall, no later than the first day of the month, review with the Architect and Owner a preliminary draft of the Application for Payment to assure agreement with the Contractor before final copies of the Application are typed and formally submitted. The Architect shall then review the Contractor's formal Application for Payment and certify in writing in accordance with Section 9.4, the total value of work done, including an allowance for the value of materials delivered and suitably stored at the site to the time of such estimate. The Owner shall retain five (5) percent of such estimated value until a maximum of five (5) percent of the Agreement sum has been retained, said retainage to be held by the Owner as part security for the fulfillment of the Agreement by the Contractor. Final payment, including the retainage, shall be due thirty (30) days after final completion of the work, provided the work be then fully completed and the Agreement fully performed.

9.3.3 Delete subparagraph 9.3.3 in its' entirety and substitute with the following:

The Contractor warrants that title to all work covered by an Application for Payment, except materials and equipment suitably stored on or off the site, will pass to the Owner no later than the time of payment. However, title to materials and equipment suitably stored on or off site shall not pass to the Owner until such time as said materials and equipment are properly installed by the Contractor even though payment for such materials and equipment may have been previously effected. The Contractor further warrants that upon submittal of an Application for Payment all Work for which Certificates for Payment have been previously issued and payments received from the Owner shall, to the best of the Contractor's knowledge, information and belief, be free and clear of liens, claims, security interests or encumbrances in favor of the Contractor, Subcontractors, material suppliers, or other persons or entities making a claim by reason of having provided labor,

materials and equipment relating to the Work. This provision may not be explained, supplemented, or modified by a course of dealing, a usage of trade, a course of performance or other interpretation that may arise out of the commercial context in which this provision is used.

9.4.1 Delete subparagraph 9.4.1 in its' entirety and substitute with the following:

The Architect, will, not later than the seventh (7th) day of each calendar month, either issue and deliver to the Owner a Certificate for Payment, with a copy to the Contractor, for such amount as the Architect determined is properly due, or notify the Contractor and Owner in writing the Architect's reasons for withholding a Certificate as provided in sub-paragraph 9.5.1.

9.4.3 Add new subparagraph 9.4.3 as follows:

If the Application for Payment discloses any problems, the Architect shall immediately bring such problems to the Owner's attention.

9.5.1 Delete the word "reasonably" in line 1; delete the words "in the Architect's opinion" in lines 2 and 8; delete the word "repeated" in sub-subparagraph 9.5.1.7.

9.5.2 Add the following to subparagraph 9.5.2:

The Owner shall not be deemed in default by reason of withholding payment while any of the above grounds remain uncured as stated in paragraph 9.5.1.

9.5.4 Add new subparagraph 9.5.4 as follows:

No interest is to be allowed or paid by the Owner upon any monies retained under the provisions of this Contract.

9.6.1 Delete subparagraph 9.6.1 in its' entirety and substitute with the following:

After the Architect has issued a Certificate for Payments, the Owner shall make payment to the Contractor not later than the first Friday after the 15th day of the calendar month during which the Application has been submitted. Delays in submitting the application for payment in accordance with subparagraph 9.3.1 above will result in a corresponding delay in payment.

9.7 Delete the word "seven" on lines1, 2 and 4 and replace with the word "fourteen" on both lines. Delete the words "plus interest as provided for in the Contract Documents" on line 7.

9.8.2 Change subparagraph 9.8.2 as follows:

In line 1, add the words "and Architect" after the word "Owner" and change the word "agrees" to "agree" in line 1. Add the words "and Owner" after the word "Architect" on line 3.

9.8.3 Insert the words "and Owner" after the word "Architect" on lines 1 and 6. Insert the words "and Owner's" after the word "Architect's" on line 2.

9.8.5 Delete subparagraph 9.8.5 in its' entirety and substitute the following:

"The Certificate of Substantial Completion shall be submitted to the Owner and Contractor for their written acceptance of responsibilities assigned to them in such Certificate. Upon Substantial Completion of the Work or designated portion thereof and upon application by the Contractor and certification by the Architect, the Owner shall make payment reflecting adjustments in retainage, if any, for such work or portion thereof as provided in the Contract Documents."

9.10.1 Add the words "and Owner" on both lines 2 and 3 after the word "Architect".

9.10.2 Delete subparagraph 9.10.2 in its' entirety and substitute with the following:

Neither final payment nor any remaining retained percentage shall become due until the Contractor submits to the Architect in a form satisfactory to the Owner (1) an affidavit that payrolls, bills for materials and equipment, and other indebtedness connected with the Work for which the Owner or the Owner's property might be responsible or encumbered (less amounts withheld by Owner) have been paid or otherwise satisfied, (2) a certificate evidencing that insurance required by the Contract Documents to remain in force after final payment is currently in effect and will not be canceled or allowed to expire until at least 30 days after written notice has been given to the Owner, (3) a written statement that the Contractor knows of no substantial reason that the insurance will not be renewable to cover the period required by the Contract Documents, (4) consent of surety, if any, to final payment, (5) final prints for record drawing use marked by the Contractor with record information as set forth in the Contract Documents, (6) a final sworn statement from the Contractor duly executed and acknowledged showing all Subcontractors to be fully paid and similar sworn statements from Subcontractors and, where appropriate, from Sub-Subcontractors, (7) if required by the Owner, other data establishing payment or satisfaction of obligations, such as receipts, releases and waivers of liens, claims, security interests or encumbrances arising out of the Contract, to the extent and in such form as may be designated by the Owner. If a Subcontractor or Sub-Subcontractor refuses to furnish a release or waiver required by the Owner, the Contractor may furnish a bond satisfactory to the Owner to indemnify the Owner against such lien. If such lien remains unsatisfied after payments are made, or is not bonded over as provided in the preceding sentence, the Contractor shall promptly

pay to the Owner all money that the Owner may be compelled to pay in discharging such lien, including all costs and reasonable attorneys' fees.

ARTICLE 10 - PROTECTION OF PERSONS AND PROPERTY

10.2.1.4 Add the following as new sub-subparagraph 10.2.1.4:

the environment, including, without limitation, air, water, land, including wetlands, and other natural resources, and plant and animal life of all types.

10.2.2 Delete subparagraph 10.2.2 in its' entirety and substitute with the following:

The Contractor shall give notices and comply with applicable laws (including, without limitation, the requirements of Connecticut General Statutes Section 31-40m relating to toxic substances and the requirements of the Occupational Safety and Health Act and the Construction Safety Act of 1969, as amended, and regulations and standards promulgated thereunder), ordinances, rules, regulations and lawful orders of public authorities bearing on safety of persons or property or the environment or their protection from damage, injury, destruction, pollution or loss. Said laws, ordinances, rules, regulations, standards, and lawful orders are incorporated herein by reference.

10.2.2.1 Add new sub-subparagraph 10.2.2.1 as follows:

The Contractor shall be directly responsible for compliance therewith on the part of its agents, employees, materialmen and Subcontractors and shall directly receive and be responsible for all citations, assessments, fines or penalties which may be incurred by reason of its agents', employees', materialmen's or Subcontractors' failure to so comply.

10.2.4 Add the following to subparagraph 10.2.4:

The Contractor shall comply fully and require compliance with all applicable laws, including Connecticut General Statutes Sec. 16-345, et. seq., and the regulations promulgated thereunder, relating to discharge of explosives.

10.2.5 Add the number "10.2.1.4" after the number "10.2.1.3" on lines 2 and 5.

10.2.8 Delete the number "21" in line 4 and replace with the number "10".

10.2.9 Delete the number "21" in line 4 and replace with the number "10".

Add new subparagraph 10.2.9 as follows:

The Contractor shall be responsible for the adequate strength and safety of all scaffolding, staging and hoisting equipment and for temporary shoring, bracing and tying.

10.2.10 Add new subparagraph 10.2.10 as follows:

The Contractor shall protect all streets, roads and sidewalks and shall make all necessary repairs at his own expense, and shall maintain these reasonably clean of dirt, mud or other debris that is due to the construction operation.

10.2.11 Add new subparagraph 10.2.11 as follows:

It shall be the Contractor's responsibility to protect finished sidewalks and curbs against damage caused by trucks, etc., driving over them. If they are damaged they must be replaced by the Contractor without cost to the Owner.

10.2.12 Add new subparagraph 10.2.12 as follows:

The Contractor shall furnish approved hard hats, other personal protective equipment as required, approved first aid supplies, name of first aid attendant and a posted list of emergency facilities.

10.3.2 Delete subparagraph 10.3.2 in its' entirety and substitute with the following:

The Owner shall obtain the services of a licensed laboratory to verify the presence of absence of the material or substance reported by the Contractor and, in the event such material or substance is found to be present, to verify that it has been rendered harmless. When the material or substance has been rendered harmless, work in the affected area shall resume. The Contract Time may be extended appropriately.

10.3.3 Delete subparagraph 10.3.3 in its' entirety.

10.3.4 Insert a period after the word "Site" on line 2 and delete the rest of the paragraph.

10.3.6 Delete paragraph 10.3.6 in its' entirety.

ARTICLE 11 - INSURANCE AND BONDS

11.1.2 – 11.3.10 Delete subparagraphs 11.1.2 through 11.3.10 in their entirety and replace them with the attached Indemnification and Insurance Exhibit which shall be fully incorporated by reference into this Agreement.

11.4.3 Add new subparagraph 11.4.3 as follows:

The Contractor shall increase the principal amount of the performance and labor and materials payments bond(s) in direct proportion to any increase in the value of the Contract resulting from such change orders.

11.4.4 Add new subparagraph 11.4.4 as follows:

Bonds furnished by the Contractor shall comply with all relevant Connecticut statutes including Conn. Gen. Stat. Sec. 49-41.

ARTICLE 12 - UNCOVERING AND CORRECTION OF WORK

12.1.1 Add the words "or Owner's" after the word "Architect's" in lines 1 and 3. Add the words "or Owner" after the word "Architect" in line 2.

12.1.2 Add the words "or Owner" after the word "Architect" on lines 1 and 2.

12.2.2 Delete sub-subparagraphs 12.2.2.1, 12.2.2.2 and 12.2.2.3 in their entirety and substitute with the following:

12.2.2 If, within one year after the date of final completion of the Work or designated portion thereof, or after the date for commencement of warranties established under subparagraph 9.9.1, or by terms of any applicable special warranty required by the Contract Documents, any of the Work is found to be not in accordance with the requirements of the Contract Documents, the Contractor shall correct it promptly at the Contractor's sole expense after receipt of written notice from the Owner to do so unless the Owner has previously given the Contractor a written acceptance of such condition. This period of one year shall be extended with respect to portions of Work first performed after final completion, by the period of time between final completion and the actual performance of the Work. This obligation under this subparagraph 12.2.2 shall survive acceptance of the Work under the Contract and termination of the Contract. The Owner shall give such notice promptly after discovery of the condition.

ARTICLE 13 - MISCELLANEOUS PROVISIONS

13.1 Add the following to the end of subparagraph 13.1:

The Work shall comply with all applicable laws, statutes, ordinances, codes, rules, regulations or orders during its performance and its completion.

13.4.1 Delete the words "by law" in line 3 and substitute with the words "at law or in equity".

13.4.3 Add new subparagraph 13.4.3 as follows:

No provision contained in the Contract Documents shall create or give to third parties any claim or right of action against the Owner or the Contractor except as specifically provided herein.

13.5.1 Delete subparagraph 13.5.1 in its' entirety and substitute with the following:

If the Contract Documents, or any laws, ordinances, building codes, rules, regulations or orders of any governmental body or public or quasi-public authority having jurisdiction over the Work or the site of the Project require any portion of the Work to be inspected, tested or approved, the Contractor shall give the Architect and the Owner timely notice thereof so Architect and Owner may observe such inspection, testing or approval. The Contractor shall bear all costs of such inspections, test or approvals except where the Contract Documents provide otherwise.

13.6 Delete subparagraph 13.6 in its' entirety.

13.7 Delete paragraph 13.7 in its' entirety.

13.8 CAPTIONS

13.8. The captions and headings of various Articles and Paragraphs in the Contract Documents are for convenience only and are not to be construed as defining or limiting, in any way, the scope or intent of the provisions hereof.

13.9 Add a new Paragraph 13.9 as follows:

13.9 SEVERABILITY

13.9 The invalidity of any covenant, restriction, condition, limitation in any other part or provision of the Contract Documents shall not impair or affect in any manner the validity, enforceability or effect of the remainder of the Contract Documents.

13.10 Add a new Paragraph 13.10 as follows:

In the event of any unavoidable cause beyond the control of the parties, whether natural or man-made, which renders the performance of this contract impossible, the contract shall be terminated. Such occurrences shall include, without limitation, death of the Contractor (in the event that the Contractor is a sole proprietor); destruction of all, or a major portion of the Contractor's equipment; legal order by a court of competent jurisdiction, or referendum barring performance of the contract;

war, famine, flood, plague, pestilence or act of God. Any amounts due to either party by the other as the result of actions taken pursuant to the contract prior to the occurrence which renders performance impossible shall be paid, but no further sums shall be due from either party to the other, by way of damages for the termination of the contract.

13.11 Add new paragraph 13.11 as follows:

The Contractor shall comply with Section 12-43 of the Connecticut General Statutes as may be amended.

Sec. 12-43. Property of nonresidents. All owners of real estate, or of tangible personal property located in any town for three months or more during the assessment year immediately preceding any assessment day, who are nonresidents of such town, shall file lists of such real estate and personal property with the assessors of the town in which the same is located on such assessment day, if located in such town for three months or more in such year, otherwise, in the town in which such property is located for the three months or more in such year nearest to such assessment day, under the same provisions as apply to residents, and such personal property shall not be liable to taxation in any other town in this state. The list of each nonresident taxpayer shall contain his post-office and street address. The assessors shall mail to each nonresident, or to his attorney or agent having custody of his taxable property, at least fifteen days before the expiration of the time for filing lists, blank forms for filing lists of such property. The lists of taxable property of nonresidents shall be arranged in alphabetical order and separate from the lists of residents, provided no such separation shall be necessary in any town the board of assessors of which, upon the request of its property tax collector, has made rules and regulations approved by the secretary of the office of policy and management setting up an alternative method of arrangement.

ARTICLE 14 - TERMINATION OR SUSPENSION OF THE CONTRACT

14.1.1 Delete the number "30" on line 1 and substitute with the number "60".

14.1.3 Delete subparagraph 14.1.3 in its entirety and substitute with the following:

If one of the reasons described in subparagraph 14.1.1 or 14.1.2 exists, the Contractor may, upon seven additional days written notice to the Owner and Architect, terminate the Contract and recover from the Owner payment for work executed.

14.2.1 Delete subparagraph 14.2.1 in its' entirety and substitute with the following:

14.2.1 The Owner may terminate the Contract for any of the following causes:

14.2.1.1 If the Contractor shall institute or consent to proceedings requesting relief or arrangement under the Federal Bankruptcy Act or any similar or applicable federal or state law or if a petition under any federal or state bankruptcy or insolvency law is filed against the Contractor and such petition is not dismissed within sixty (60) days from the date of said filing, or if the Contractor admits in writing his inability to pay his debts generally as they become due, or if he makes a general assignment for the benefit of his creditors, or if a receiver, liquidator, trustee or assignee is appointed on account of his bankruptcy or insolvency; or

14.2.1.2 If a receiver of all or any substantial portion of the Contractor's properties is appointed; or

14.2.1.3 If the Contractor abandons the Works; or

14.2.1.4 If the Contractor fails to prosecute the Work promptly and diligently; or

14.2.1.5 If the Contractor fails or refuses to supply enough properly skilled workers or proper materials for the Work; or

14.2.1.6 If the Contractor submits an Application for Payment, sworn statement, waiver of lien, affidavit or document of any nature whatsoever which is intentionally falsified; or

14.2.1.7 If the Contractor fails to make prompt payment to Subcontractors or for materials or labor or otherwise breaches his obligations under any Subcontract with a Subcontractor; or

14.2.1.8 If a mechanic's or materialman's lien or notice of lien is filed against any part of the Work or the site of the Project and not promptly bonded or insured over by the Contractor in a manner satisfactory to the Owner; or

14.2.1.9 If the Contractor disregards any laws, statutes, ordinances, rules, regulations or orders of any governmental body or public or quasi-public authority having jurisdiction of the Work or the site of the Project; or

14.2.1.10 If the Contractor otherwise substantively violates any provision of the Contract Documents.

14.2.2.1 Delete the semicolon after "Contractor" in line 2 and add:

and may request that the Contractor remove any part or all of his equipment, machinery, and supplies from the site of the Project within seven (7) days from the date of such request, and in the event of Contractor's failure to do so, may remove or store such equipment, machinery and supplies at the Contractor's expense;

14.2.4 Delete subparagraph 14.2.4 in its' entirety and substitute with the following:

If the unpaid balance of the Contract Sum exceeds all costs to the Owner of completing the Work, then the Contractor shall be paid for all Work performed by the Contractor to the date of termination. If such costs to the Owner of completing the Work exceed such unpaid balance, the Contractor shall pay the difference to the Owner immediately upon the Owner's demand. The costs to the Owner of completing the Work shall include (but not be limited to) the cost of any additional architectural, managerial and administrative services required thereby, any costs incurred in retaining another Contractor or other Subcontractors, any additional interest or fees which the Owner must pay by reason of a delay in completion of the Work, attorney's fees and expenses, and any other damages, costs and expenses the Owner may incur by reason of completing the Work or any delay thereof. The amount, if any, to be paid to the Owner or Contractor shall be certified by the Architect, upon application, in the manner provided in Paragraph 9.4, and this obligation for payment shall survive the termination of the Contract".

14.3.2 In line 1, delete "shall" and insert "may".

14.4.3 On line 2, insert a period after the word "termination" and delete the remaining words on lines 2 and 3.

ARTICLE 15 – CLAIMS AND DISPUTES

15.1.2 Delete the number "21" in line 4 and replace with the number "10".

15.2.1 Delete subparagraph 15.2.1 and substitute the following:

Decision of Architect. Claims, including those alleging an error or omission by the Architect, shall be referred initially to the Architect for decision. A decision by the Architect shall be required as a condition precedent to mediation, litigation or other formal method of dispute resolution of all Claims between the Contractor and the Owner arising prior to the date final payment is due, unless no decision has been

rendered by the Architect within 45 days of referral of the Claim to the Architect or the Architect fails to provide a decision as scheduled in subparagraphs 15.2.2 through 15.2.5, whichever is later.

15.2.2 On line 4 add the word "or" after the word "Claim," and add a period after the word "compromise." Delete the balance of the paragraph after the word "compromise".

15.2.3 On lines 3 and 4 replace the words "Owner" and "Owner's" with "claimant" and "claimant's".

15.2.4 Delete the last sentence of subparagraph 15.2.4 and substitute the following:

"Within 10 days of receipt of the response or supporting data, if any, the Architect will either reject or approve the claims in whole or in part, or suggest a compromise."

15.2.5 Delete the second sentence of subparagraph 15.2.5.

15.2.9 Add new subparagraph 15.2.9 as follows:

If a claim has not been resolved after consideration of steps described in subparagraphs 15.2.1 through 15.2.5, then the parties shall make an additional good faith effort to resolve the claim through an informal dispute resolution process mutually agreeable to the parties. If the claim is still not capable of resolution within ten days or such other time period that is mutually agreed upon, the parties may proceed to arbitration, litigation, or formal alternate dispute resolution.

15.2.10 Add new subparagraph 15.2.10 as follows:

If no form of dispute resolution is mutually agreed upon, no party may compel arbitration, mediation or alternate dispute resolution, and the parties may pursue whatever legal remedies are available to them.

15.3 (15.3.1 – 15.3.3) Delete in its' entirety.

15.4 (15.4.1 – 15.4.3) Delete in its' entirety.

END OF SUPPLEMENTARY GENERAL CONDITIONS

INDEMNIFICATION AND INSURANCE EXHIBIT
CONTRACT BIDDING DOCUMENTS

DECK RENOVATION AND EXPANSION OF ROCKLEDGE CLUBHOUSE AT ROCKLEDGE COUNTRY CLUB
BID #6543F

I. INDEMNIFICATION

A. To the fullest extent permitted by law, the Contractor shall release, defend, indemnify, and hold harmless the Town of West Hartford, the Board of Education, their respective boards, commissions, officers, officials, employees, agents, representatives, and servants from any and all suits, claims, losses, damages, costs (including without limitation reasonable attorneys' fees), compensation, penalties, fines, liabilities or judgments of any name or nature for:

Bodily injury, sickness, disease, or death; and/or
Damage to or destruction of real and/or personal property; and/or
Financial losses (including, without limitation, those caused by loss of use)

sustained by any person or concern, including officers, employees, agents, Subcontractors, materialmen, or servants of the Town, the Board of Education, or the Contractor, or by the public, which is caused or alleged to have been caused in whole or in part by the negligent act(s) or omission(s) of the Contractor, or any Subcontractor, or materialmen, or anyone directly or indirectly employed by them arising from or related to the performance of this Contract or from the inaccuracy of any representation or warranty contained in the Contract Documents. This indemnity shall not be affected by other portions of the Contract relating to insurance requirements

B. To the fullest extent permitted by law, the Contractor shall release, defend, indemnify, and hold harmless the West Hartford Board of Education and the Town of West Hartford, their respective boards and commissions, officials, officers, employees, agents, representatives, and servants from any and all suits, claims, damages, costs, (including without limitation reasonable attorneys' fees), compensation, penalties, fines, liabilities or judgments that may arise out of the failure of the Contractor, its officers, agents, Subcontractors, materialmen or anyone directly or indirectly employed by them to comply with any laws, statutes, ordinances, building codes, and rules and regulations of the United States of America, the State of Connecticut, the Town of West Hartford, or their respective agencies. This indemnity shall not be affected by other portions of the Contract relating to insurance requirements.

II. INSURANCE

A. Insurance Requirements

1. For purpose of this Exhibit, the term "Contractor" shall also include their respective agents, representatives, employees, subcontractors or sub-subcontractors and the term "Town of West Hartford, and West Hartford Board of Education" (hereinafter called the "Owner") shall include their respective boards, commissions, officials, officers, agents, consultants, employees and volunteers.

2. The Contractor shall obtain and maintain at its own cost and expense all the insurance described below continuously for the duration of the Contract, including any and all extensions, except as defined otherwise in this Exhibit.

3. The provisions of this Exhibit shall survive the expiration, suspension or termination of this Contract with respect to any event occurring prior to such expiration, suspension or termination.

4. Contractor's policies shall be written by insurance companies authorized to do business in the State of Connecticut, with a Best's rating of no less than A:VII, or otherwise approved by the Owner.

5. **All liability policies (with the exception of Worker's Compensation) shall include the Town of West Hartford, the West Hartford Board of Education, and their respective officials, boards and commissions, officers, representatives, agents, servants, employees and volunteers as an Additional Insured.** The coverage shall include, but not be limited to, investigation, defense, settlement, judgment or payment of any legal liability. Any **Insured vs. Insured** language shall be amended to eliminate any conflicts or coverage restrictions between the respective Insureds.

6. If the Contractor fails to purchase or maintain the required insurance specified by this Exhibit, the failure shall be treated as a default in Work. The Owner may (but shall not be obligated to) purchase such insurance on the Contractor's behalf and shall be entitled to be repaid for any premiums paid therefore by the Contractor in the manner set forth in Paragraph 2.4.

7. When the Owner or the Contractor is damaged by failure of the Contractor to purchase or maintain insurance required under this Exhibit, the Contractor shall bear all reasonable costs including, but not limited to, attorney's fees and costs of litigation properly attributable thereto.

8. If requested by the Owner after the date of the Owner-Contractor Agreement, the Contractor shall promptly procure, at the Owner's expense, insurance coverage in such amounts as the Owner may request coverage not listed in this Exhibit.

B. **Required Insurance Coverages:**

1. **Commercial General Liability:** $1,000,000 limit each occurrence / $2,000,000 aggregate for premises/ operations, independent contractors' protective, products/ completed operations, contractual liability, personal injury and broad form property damage. Contractor shall continue to provide products/ completed operations coverage for two (2) years after Final Completion of the Work.

2. **Automobile Liability and Physical Damage Coverage:** $1,000,000 limit each accident for any auto, including statutory uninsured/underinsured motorist coverage and medical payments. Policy shall include collision and comprehensive physical damage coverage.

3. **Umbrella Liability:** $2,000,000 each occurrence, following form. Umbrella liability coverage may be included to meet minimum requirements.

4. **Workers' Compensation and Employer's Liability:** Statutory coverage in compliance with the Workers' Compensation laws of the State of Connecticut or applicable to the Work to be performed with an Experience Modification Rate of 1.0 or less. Policy shall include Employer's Liability with minimum limits of $100,000 each accident, $500,000 disease/policy limit, $100,000 disease/each employee.

   The Contractor represents that they are currently in compliance with all requirements of the State of Connecticut Workers' Compensation Act and that it shall remain in compliance for the duration of the Contract. The Contractor agrees that Workers' Compensation is their sole

remedy and shall indemnify and hold harmless the Owner from all suits, claims, and actions arising from personal injuries to the Contractor, however caused. This indemnity shall not be affected by a lapse of Workers' Compensation coverage and/or if the Contractor failed, neglected, refused or is unable to obtain Workers' Compensation insurance.

5. **Personal Property:**
All personal property of the Contractor are the sole risk of the Contractor. The Contractor agrees to indemnify, defend and hold harmless the Owner from any and all losses or damages, however caused, to any and all personal property belonging to the Contractor.

C. **Additional Terms**

1. Minimum Scope and Limits: The required insurance shall meet the minimum scope and limits of insurance specified in this Exhibit, or required by applicable federal, state and/or municipal law, regulation or requirement, whichever coverage is greater. Providing proof of compliance with the insurance requirements described in this Exhibit is not intended, and shall not be construed to exclude the Owner from additional limits and coverage available to the Contractor.

   Acceptance by the Owner of insurance submitted by the Contractor does not relieve or decrease in any manner the liability of the Contractor arising out of or in connection with this Contract. The Contractor is responsible for any losses, claims and costs of any kind which exceed the Contractor's limits of liability, or which may be outside the coverage scope of the policies, or a result of non-compliance with any laws including, but not limited to, environmental laws. The requirements herein are not intended, and shall not be construed to limit or eliminate the liability of the Contractor that arises from the Contract.

2. Certificates of Insurance: The Contractor shall provide certificates of insurance acceptable to the Owner confirming compliance with this Exhibit and thereafter upon renewal or replacement of each required policy of insurance.

3. Subcontractors: All subcontractors of the Contractor are required to comply with this Exhibit. The Contractor shall include all subcontractors as an Insured under its insurance policies or shall furnish separate certificates of insurance and endorsements for each subcontractor.

4. Premiums, Deductibles and Other Liabilities: Any and all related costs, including but not limited to, deductibles, retentions, losses, claim expenses, premiums, taxes, and audit charges earned are the sole responsibility of the Contractor.

5. Occurrence Form, Primary and Non-Contributory: All required insurance coverage shall be written on an occurrence basis. Each required policy of insurance shall be primary and non-contributory with respect to any insurance or self-insurance maintained by the Owner.

6. Waiver of Rights of Recovery: Both the Contractor and Contractor's insurers shall waive their rights of recovery or subrogation against the Owner.

7. Claim Reporting: Any failure of the Contractor to comply with the claim reporting provisions of the required insurance policies shall not relieve the Contractor of any liability or indemnification in favor of the Owner for losses which otherwise would have been covered by said policies.

8. Cancellation Notice: Each required insurance policy shall not be suspended, voided, cancelled or reduced except after thirty (30) days prior written notice has been given to the Owner, ten (10) days for non-payment of premium.

SPECIFICATIONS FORMAT

1.1 FORMAT

A. These Specifications generally follow the Construction Specifications Institute format:

Divisions
Sections
Articles
Paragraphs
Subparagraphs

B. Generally each Section, except for Division 1 Sections, is divided into three (3) parts:

Part 1 - General
Part 2 - Products
Part 3 - Execution

Note: Certain Sections may contain a "Part 4 – Schedules".

1.2 LANGUAGE

A. The Specifications language is written using both indicative mood and imperative mood.

Where the imperative mood is used, the language is directed to the Contractor, unless specifically indicated otherwise.

B. Where a colon (:) is used after a subject, the phrase "shall be" (or variations thereof) is to be inferred.

C. Where the word "provide" is used, the meaning shall be that the item or product shall be "furnished, delivered, and installed/erected/applied/connected for its intended use and as required for the completed Work."

D. Instruction Terms

Wherever reference is made in the Contract to the Work or its performance, the terms "directed", "required", "permitted", "ordered", "designated", "prescribed", and words of similar import shall imply the direction, requirement, permission, order, designation or prescription of the intent of the documents

E. Approval and Acceptance Terms

"Approved", "acceptable", "satisfactory" and words of similar import shall mean and intend: approved by, acceptable to, or satisfactory to, the Architect.

1.3 CONTRACT DOCUMENTS MADE PART OF TECHNICAL SECTIONS

A. General Conditions, General Requirements (Div. 1), and Supplementary General Requirements are made part of each technical Section whether or not attached thereto.

B. Addenda, Amendments, Change Orders, Modifications and all other parts of the Contract Documents are made a part of each technical Section, where applicable, whether or not attached thereto.

END OF SECTION

SUMMARY OF THE WORK

PART 1 – GENERAL

RELATED DOCUMENTS

Drawings and general provisions of contract, including General and Supplementary General Conditions and Division-1 Specification sections, apply to work of this section.

1.1 SECTION INCLUDES

A. Scope of the Work.
B. Contractor use of site and premises.
C. Work Sequence.

1.2 SCOPE OF THE WORK

A. General construction consisting of the removal of the existing railing system that wraps from the south side along the west elevation and end at the northwest corner. Remove the railing supports and lighting within the railing posts. Remove the railing between the vertical metal posts at the stair. Remove both metal handrails at the stair. Remove the rubber matting and any deteriorated plywood sheathing below the mats. Remove the skirt board on the south, west and up to the new construction of the kitchen storage expansion.

B. Install new waterproof membrane epoxy finish to the deck. Wrap integral base of epoxy up to a point underneath the window sills. Install new Azak 1x skirt boards over the epoxy base. Install new railing system: wood posts with composite sleeves, stainless steel wire railing system, Lumirail top rail with LED pinpoint lighting, LED recessed point source in four post supports, Lumirail handrails on each side of the metal stair located at the south side of the building and a new awning system.

1.3 CONTRACTORS USE OF SITE AND PREMISES

A. The Contractor shall assume full responsibility of all protection and safe keeping of products under this Contract, as well as,

1. Follow all security requirements of Owner.
2. Securing the site at the end of each workday.

B. Obtain and pay for use of additional storage or work areas needed for operations under this Contract.

1.4 WORK SEQUENCE

A. The Contractor shall construct work as indicated on the drawings and coordinate construction schedule and operations of all subcontractors with the Owner and the Architect.

B. The Owner will not occupy the site during the Work as established prior to start of project.

C. The Contractor shall substantially complete the Work no later than Month Day, 2016.

PART 2 – PRODUCTS

Not Used.

PART 3 – EXECUTION

Not Used.

END OF SECTION

CONTRACT CONSIDERATIONS

PART 1 - GENERAL

RELATED DOCUMENTS

Drawings and general provisions of contract, including General and Supplementary General Conditions and Division – 1 Specification sections, apply to work of this section.

1.1 SECTION INCLUDES

A. Construction Time.
B. Schedule of Values.
C. Application for Payment.
D. Change Procedures.
E. Request for Information.

1.2 RELATED SECTIONS

A. Document Owner – Contractor Agreement.
B. Section 01300 – Submittals: Schedule of Values.
C. Section 01600 – Material and Equipment: Product substitutions.

1.3 CONSTRUCTION TIME

A. Upon execution of Owner – Contractor Agreement and/or receipt of written notices to proceed, the Contractor shall be ready to start work at the site no earlier than Month Day, 2016. The Contractor shall be ready to deliver a 100 percent completed project to the Owner no later than Month Day, 2016.

1.4 SCHEDULE OF VALUES

A. Submit typed schedule on AIA Form G702 – Application and Certificate for Payment Continuation Sheet.

B. Submit Schedule of Values in duplicate within 14 days after date of Owner-Contractor Agreement.

C. Suggested Format: Utilize the Table of Content of this Project Manual. Identify each line item with number and title of the major specification Section. Provide a separate line for Labor and Materials for each item. Identify site mobilization, bonds and insurance. This is the required minimum breakdown for the Schedule of Values; the Contractor may provide additional breakdowns.

D. Revise schedule to list approved Change Orders, with each Application for Payment.

1.5 APPLICATION FOR PAYMENT

A. Submit three original typed Partial Payment Estimate RD 1924-18 (Rev. 6/97).

B. Submit up-dated construction schedule with each Application for Payment.

1.6 CHANGE PROCEDURES

A. TheArchitect will advise of minor changes in the Work not involving an adjustment to Contract Sum or Contract Time as authorized by AIA A201 Article 7.4 by issuing supplemental instructions on AIA Form G710 Architect's Supplemental Instructions.

B. The Architect may issue a Proposal Request which includes a detailed description of a proposed change with supplementary or revised Drawings and specifications, a change in Contract Time for executing the change and the period of time during which the requested price will be considered valid. Contractor will prepare and submit an estimate within 15 days.

C. The Contractor may propose a change by submitting request for change to the Architect using AIA Form G709 Proposal Request, describing the proposed change and its full effect on the work. Include a statement describing the reason for the change, and the effect on the Contract Sum and Contract Time with full documentation and a statement describing the effect on Work by separate or other contractors. Document any requested substitutions in accordance with Section 01600.

D. Stipulated Change Order: Based on Proposal Request and Contractor's fixed price quotation or Contractor's request for a Change Order as approved by Architect.

E. Construction Change Directive: Architect may issue a directive on AIA Form G704 Construction Change Directive signed by the Owner, instructing the Contractor to proceed with a change in the Work, for subsequent inclusion in a Change Order. Document will describe changes in the Work, and designate method of determining any change in Contract Sum or Contract Time. Promptly execute the change.

F. Change Order Forms: RD 1924-7 (Rev. 2/97).

G. Execution of Change Orders: Architect will issue Change Orders of signatures of parties as provided in the Conditions of the Contract.

1.7 REQUEST FOR INFORMATION

A. Submit all clarification requests or request for information using Architect's RFI form (enclosed). Indicate RFI number, date, who is initiating the request, date of desired response and which design team number is affected.

PART 2 – PRODUCTS

Not Used.

PART 3 – EXECUTION

Not Used.

END OF SECTION

APPLICATIONS FOR PAYMENT

1.1 PAYMENT

A. Payment will be made in accordance with Section 16.01 of the General Conditions, and Article 9 of the Supplementary Conditions of this Specification.

1.2 UNINCORPORATED MATERIALS

A. Partial Payments for Materials in Advance of Their Incorporation in the Work Pursuant to Article 16 of the General Conditions and Article 11 of the Supplementary Conditions of this Specification.

1. In order to better ensure the availability of materials, fixtures and equipment when needed for the work, the Owner's may authorize partial payment for certain materials, but only in strict accordance with and subject to all the terms and conditions set forth in this Article, unless another method of payment is elsewhere provided in the Specifications for specified materials, fixtures or equipment.

2. The Contractor shall submit to the Owner's a written request, in quadruplicate, for payment of materials purchased or to be purchased for which Contractor desires to be paid prior to their actual incorporation in the work. The request shall be accompanied by a schedule of the types and quantities of materials, and shall state whether such materials are to be stored on or off the site.

3. Where the materials are to be stored off the site, they shall be stored at a place other than the Contractor's premises (except with the written consent of the Owner's).

4. The Contractor shall set apart and separately store at the place or places of storage all materials and shall clearly mark the materials "PROPERTY OF OWNER'S" and further, shall not at any time move any of said materials to another off-site place of storage without the prior written consent of the Owner. Materials may be removed from their place of storage off the site for incorporation in the work upon approval of the Owner.

5. Where the materials are to be stored at the site, they shall be stored at such locations as shall be designated by the Owner and only in such quantities as, in the opinion of the Owner, will not interfere with the proper performance of the work by the Contractor or by other contractors then engaged in performing work on the site. Such materials shall not be removed from their place of storage on the site except for incorporation in the work, without approval of the Owner.

B. Insurance

1. Storage Off Site: Where the materials are stored off the site and until such time as they are incorporated in the work, the Contractor shall fully insure such materials against any and all risks of destruction, damage or loss, including but not limited to fire, theft, and any other casualty or happening. The policy of insurance shall be payable to the Owner. It shall be in such terms and amounts as shall be approved by the Owner and shall be placed with a company duly licensed to do business in the State of Connecticut. The Contractor shall deliver the original and one copy of such policy and policies marked "Fully Paid" to the Owner.

2. Storage on Site: Where the materials are stored at the site, the Contractor shall furnish satisfactory evidence to the Owner that they are properly insured against loss, by endorsement or otherwise, under the policy or policies of insurance obtained by the Contractor to cover losses to materials owned or installed by the Contractor. The policy of insurance shall cover fire and extended coverage against windstorm, hail, explosion and riot attending a strike, civil commotion, aircraft, vehicles and smoke.

C. All costs, charges and expenses arising out of the storage of such materials, shall be paid by the Contractor; and the Owner hereby reserves the right to retain out of any partial or final payment made under the Contract an amount sufficient to cover such costs, charges and expenses, with the understanding that the Owner shall have and may exercise any and all other remedies of law for the recovery of such costs, charges and expenses. There shall be no increase in the Contract price for such costs, charges and expenses and the Contractor shall not make any claim or demand for compensation therefor.

D. The Contractor shall pay any and all cost of handling and delivery of materials, from the place of storage to the site of the work, and the Owner shall have the right to retain from any partial or final payment an amount sufficient to cover the cost of such handling and delivery.

E. In the event that the whole or any part of these materials are lost, damaged or destroyed in advance of their satisfactory incorporation in the work, the Contractor, at the Contractor's own expense, shall replace such materials with items of the same quality. The Owner will reimburse the Contractor for the cost of the replaced materials to the extent, and only to the extent, of the money actually received by the Owner under the policies of insurance herein before referred to. Until such time as the materials are replaced, the Owner will deduct from the value of the stored materials or from any other money due under the Contract, the amount paid to the Contractor for such lost, damaged or destroyed materials.

F. Should any of the material paid for by the Owner hereunder be subsequently rejected or incorporated in the work in a manner or by a method not in accordance with the Contract and Specifications, the Contractor shall remove and replace such defective or improperly incorporated materials with materials complying with the Contract and Specifications. Until such materials are replaced, the Owner will deduct from the value of the stored materials or from any other money due the Contractor, the amount paid by the Owner for such rejected or improperly incorporated materials.

G. Payment for the cost of materials made hereunder shall be made in accordance with the Contract Documents, and the Contractor always retains and must comply with the Contractor's duty to deliver to the site and properly incorporate in the work only materials which comply with the Contract Documents.

H. The Contractor shall retain any and all risks in connection with the damage, destruction or loss of the materials paid for hereunder to the time of delivery of the same to the site of the work and their proper incorporation in the work in accordance with the Contract Documents.

I. The Contractor shall comply with all laws and the regulations of any governmental body or agency pertaining to the priority purchase, allocation and use of the materials.

J. When requesting payment for such materials, the Contractor shall submit with the partial estimate duly authenticated DOCUMENTS OF TITLE such as bills of sale, invoices or warehouse receipts, all in quadruplicate. The executed bills of sale shall TRANSFER TITLE to the materials from the Contractor to the Owner (in the event that the invoices state that material has been purchased by a Subcontractor, bills of sale in quadruplicate will also be required transferring title to the materials from Subcontractor to the Contractor).

K. The Contractor shall include in each succeeding partial estimate requisition a summary of materials stored, which shall set forth the quantity and value of materials in storage, on or off the site, at the end of each preceding estimate period: (1) the amount removed for incorporation in the work; and (2) the quantity and value of materials delivered during the current period and the total value of materials on hand for which payment thereof will be included in the current payment estimate.

L. Upon proof to the satisfaction of the Owner of the actual cost of such materials and upon submission of proper proof of title as required under Paragraph J. herein, payment will be made therefor to the extent of 95%, provided however, that the cost so verified, established and approved shall not exceed the estimated cost of such materials included in the detailed bid breakdown submitted by the Contractor and approved by the Owner in accordance with schedule D; if it does, the Owner will pay only 95% of the bid breakdown.

M. Upon the incorporation in the work of any such materials, which have been paid for in advance of such incorporation in accordance with the foregoing provisions, payment will be made for such materials incorporated in the work pursuant to Paragraph L. herein.

END OF SECTION

COORDINATION AND MEETINGS

PART 1 – GENERAL

RELATED DOCUMENTS

Drawings and general provisions of Contract, including General and Supplementary General Conditions and Division-1 Specification sections, apply to work of this section.

1.1 SECTION INCLUDES

A. Coordination.
B. Pre-construction conference.
C. Progress meetings.

1.2 COORDINATION

A. Coordinate scheduling, submittals, and Work of the various Sections of Specifications to assure efficient and orderly sequence of installation of interdependent construction elements as well as meeting Owner security requirements.

B. Verify that utility requirement characteristics of operating equipment are compatible with building utilities. Coordinate work of various Sections having interdependent responsibilities for installing, connecting to, and placing in service, such equipment.

C. Coordinate installation of mechanical and electrical work, which are indicated diagrammatically on Drawings. Follow routing shown and conduit, as closely as practicable; place runs parallel with line of building. Utilize spaces efficiently to maximize accessibility for other installations, for maintenance, and for repairs.

D. Coordinate completion and clean up of Work of separate sections in preparation for Substantial Completion.

E. In finished areas, conceal pipes, ducts, and wiring within the construction. Coordinate location of fixtures and outlets within finishes.

F. Coordinate completion and cleanup of Work of separate sections in preparation for Substantial Completion.

G. After Owner occupancy of premises, coordinate access to site for correction of defective Work and Work not in accordance with Contract Documents to minimize disruption of Owner's activities.

1.3 PRECONSTRUCTION CONFERENCE

A. Architect will schedule a conference after Notice of Award and provide minutes of meeting.

B. Attendance Required: Architect, Owner's representatives, Contractor, Contractor's Superintendent, and major Subcontractors.

C. Agenda:

1. Submission of list of Subcontractors, list of Products, schedule of values, and progress schedule.

2. Procedures and processing of field decisions, submittals, substitutions, applications for payments, proposal request, Change Orders and Contract closeout procedures.

3. Scheduling.

4. Use of premises by Owner and Contractor.

5. Security and housekeeping procedures.

6. Procedures for testing.

7. Procedures for maintaining record documents.

8. Establish schedule for progress meetings.

1.4 PROGRESS MEETINGS

A. Architect will preside at meetings, record minutes, and distribute copies to Contractor and Owner's representative for distribution.

B. Attendance Required: Job Superintendent, major Subcontractors and suppliers, Owner's representative, and Architect as appropriate to agenda topics for each meeting.

C. Agenda:

1. Review minutes of previous meetings.

2. Review of Work progress.

3. Field observations, problems, and decisions.

4. Identification of problems, which impede planned progress.

5. Review of submittals schedule and status of submittals.

6. Review of off-site fabrication and delivery schedules.

7. Maintenance of progress schedule.

8. Corrective measures to regain projected schedules.

9. Planned progress during succeeding work period.

10. Coordination of projected progress.

11. Maintenance of quality and work standards.

12. Effect of proposed changes on progress schedule and coordination.

13. Other business relating to Work.

PART 2 – PRODUCTS
Not Used.

PART 3 – EXECUTION
Not Used.

END OF SECTION

CUTTING AND PATCHING

PART 1 – GENERAL

RELATED DOCUMENTS

Drawings and general provisions of Contract, including General and Supplementary General Conditions and Division-1 Specification sections, apply to work of this section.

1.1 SECTION INCLUDES

A. Requirements and limitations for cutting and patching of Work.

1.2 RELATED SECTIONS

A. Section 01120 – Alteration Project Procedures: Cutting and patching for alterations work.

B. Section 01300 - Submittals.

C. Section 01600 – Materials and Equipment: Product Options and Substitutions.

D. Individual Product Specification Sections:

1. Cutting and patching incidental to work of the Section.

2. Advance notification to other Sections of openings required in work of those Sections.

1.3 QUALITY OF CUTTING AND PATCHING WORK

A. All work is to appear as if it was completed during original construction. All equipment shall be located as closely as possible to location indicated on drawings, however locations shall be adjusted in field to minimize cutting and patching of exposed materials. Conduit, piping, duct work, wiring and apparatus shall be concealed from view in all occupied spaces but may be exposed in mechanical, storage, janitorial and equipment spaces.

B. All existing exposed materials which must be cut or removed for installation of new systems and materials shall be replaced or repaired to match existing materials as closely as practical.

C. The Contractor shall, within 15 days of the contract signing, and prior to beginning the work, carefully examine the existing conditions and mark up one copy of the plans indicating preferred location of equipment and routing of conduit, piping, duct work and wiring to minimize cutting and patching. A meeting on site with the architect and his engineering consultants shall be arranged, to review these locations and extent of cutting and patching. Work will not proceed until these plans are approved.

1.4 SUBMITTALS

A. Submit written request in advance of cutting or alteration which affects:

1. Structural integrity of any element of Project.

2. Integrity of weather exposed or moisture resistant element.

3. Efficiency, maintenance, or safety of any operational element.
4. Visual qualities of sight exposed elements.
5. Work of Owner or separate contractor.

B. Include in request:

1. Identification of Project.
2. Location and description of affected work.
3. Necessity for cutting or alteration.
4. Description of proposed work, and Products to be used.
5. Alternatives to cutting and patching.
6. Effect on work of Owner or separate contractor.
7. Written permission of affected separate contractor.
8. Date and time work will be executed.

PART 2 – PRODUCTS

2.1 MATERIALS

A. Product Substitution: For any proposed change in materials, submit request for substitution under provisions of Section 01600.

PART 3 – EXECUTION

3.1 EXAMINATION

A. Inspect existing conditions prior to commencing Work, including elements subject to damage or movement during cutting and patching.

B. After uncovering existing Work, inspect conditions affecting performance of Work.

C. Beginning of cutting or patching means acceptance of existing conditions.

3.2 PREPARATION

A. Provide temporary supports to ensure structural integrity of the Work. Provide devices and methods to protect other portions of Project from damage.

B. Provide protection from elements for areas, which may be exposed by uncovering work.

C. Maintain excavations free of water.

3.3 CUTTING AND PATCHING

A. Execute cutting, fitting, and patching including excavation and fill to complete Work.

B. Fit Products together, to integrate with other work.

C. Uncover work to install untimely work.

D. Remove and replace defective or non-conforming work.

E. Remove samples of installed work for testing when requested.

F. Provide openings in the Work for penetration of mechanical and electrical work.

3.4 PERFORMANCE

A. Execute work by methods to avoid damage to other Work, and which will provide appropriate surfaces to receive patching and finishing.

B. For existing items under warrantee, employ original installer to perform cutting and patching for weather exposed and moisture resistant elements, and sight exposed surfaces.

C. Cut rigid materials using masonry saw or core drill. Pneumatic tools are not allowed without prior approval or owner/architect.

D. Restore work with new Products in accordance with requirements of Contract Documents.

E. Fit work air tight to pipes, sleeves, ducts, conduit, and other penetrations through surfaces.

F. At penetrations of fire rated walls, partitions, ceiling, or floor construction, completely seal voids with fire rating safing material in accordance with Section 07210 – Building Insulation; Safing Insulation, to full thickness of the penetrated element.

G. Refinish surfaces to match adjacent finish. For continuous surfaces, refinish to nearest intersection or natural break. For an assembly, refinish entire unit.

END OF SECTION

REGULATORY REQUIREMENTS

1.1 LAWS AND REGULATIONS

A. All applicable Federal, State and other laws, orders, rule and regulations having jurisdiction over Construction Work in the locality of the Project, shall apply to the Contract and shall be deemed to be included in the Contract as if fully set forth herein at length.

B. Comply with all requirements of the Connecticut State Building Code. (International Building Code-2003 with 2005 Connecticut Supplement), the Connecticut Fire Safety Code (2003 NFPA 101 with 2005 Connecticut Supplement)

1.2 PERMITS AND LICENSES

A. The Contractor shall make the necessary arrangement for, and obtain all permits and licenses required for the Work, including paying the costs and expenses thereof.

B. The Contractor shall be responsible for the payment of fees, which are assessed by any City, State or Federal agency having jurisdiction over the Work, unless otherwise stipulated in the Contract Documents.

1.3 COMPLIANCE

A. The Contractor shall give all notices, pay all fees and comply with all laws, rules and regulations applicable to the Work.

1.4 ADDITIONAL COMPLIANCE

A. The Contractor, Subcontractors, and the employees of the Contractor and Subcontractors, shall comply with all regulations governing conduct, access to the premises, operation of equipment and systems, and conduct while in or near the premises.

1.5 SAFETY

A. The Contractor shall take every precaution against injuries to owner's personnel and the general public, in the performance of the Work. Refer to General Conditions, Art. 13.

B. The Contractor shall comply with all applicable OSHA regulations.

END OF SECTION

REFERENCES

1.1 LIST

Following is a list of organizations, trade associations, trade institutes, and other Standards, with the acronym for each.

Where reference is made in a technical Section to a specification or a requirement of a particular Standard, the date of the Standard is that in effect at the time of the Bid Date, or that in effect at the date of the Contract Award, if there are no bids.

AA	Aluminum Association
AABC	Associated Air Balance Council
AAMA	American Architectural Manufacturer's Association
AAN	American Association of Nurserymen
AASHTO	American Association of State Highway and Transportation Officials
AATCC	American Association of Textile Chemists and Colorists
ACI	American Concrete Institute
ACIL	American Council of Independent Laboratories
ACPA	American Concrete Pipe Association
ADC	Air Diffusion Council
AF+PA	American Forest & Paper Association
AGA	American Gas Association
AHA	American Hardboard Association
AIA	American Institute of Architects
A.I.A.	American Insurance Association
AIEE	American Institute of Electrical Engineers
AIHA	American Industrial Hygiene Association
AISC	American Institute of Steel Construction
AISI	American Iron and Steel Institute
AITC	American Institute of Timber Construction
ALI	Associated Laboratories

A.L.I.	Automotive Lift Institute
ALSC	American Lumber Standards Committee
AMCA	Air Movement and Control Association
ANSI	American National Standards Institute
AOAC	Association of Official Agriculture Chemists
APA	The Engineers Wood Association
A.P.A.	American Parquet Association
API	American Petroleum Institute
ARI	Air Conditioning and Refrigeration Institute
ARMA	Asphalt Roofing Manufacturers Association
ASA	Acoustical Society of America
ASC	Adhesive and Sealant Council
ASHRAE	American Society of Heating, Refrigerating and Air-Conditioning Engineers
ASME	American Society of Mechanical Engineers
ASPE	American Society of Plumbing Engineers
ASSE	American Society of Sanitary Engineering
ASTM	American Society for Testing and Materials
AWI	Architectural Woodwork Institute
AWPA	American Wood Preservers Association
AWPB	American Wood Preservers Bureau
AWS	American Welding Society
AWWA	American Water Works Association
BHMA	Builders Hardware Manufacturers Association
BIA	Brick Institute of America
BIFMA	Business and Institutional Furniture Manufacturer's Association
BOCA	Building Officials and Code Administrators

CABO	American Building Officials
CAUS	Color Association of the United States
CAGI	Compressed Air and Gas Institute
CBM	Certified Ballast Manufacturers Association
CDA	Copper Development Association
CGA	Compressed Gas Association
CISPI	Cast Iron Soil Pipe Institute
CRI	Carpet and Rug Institute
CRSI	Concrete Reinforcing Steel Institute
CS	Commercial Standards, U.S. Department of Commerce
CTI	Ceramic Tile Institute of America
DHI	Door and Hardware Institute
DLPA	Decorative Laminate Products Association
ECSA	Exchange Carriers Standards Association
EIA	Electronic Industries Association
EIMA	Exterior Insulation Manufacturers Association
FCI	Fluid Controls Institute
FGMA	Flat Glass Marketing Association
FS	Federal Specification
FTI	Facing Tile Institute
GA	Gypsum Association
HEI	Heat Exchange Institute
HI	Hydronics Institute
HMA	Hardwood Manufacturers Association
HPVA	Hardwood Plywood and Face Veneers
ICEA	Insulated Cable Engineers Association

IEC	International Electrotechnical Commission
IEEE	Institute of Electrical and Electronic Engineers
IESNA	Illuminating Engineering Society of North America
IGCC	Insulating Glass Certification Council
ILI	Indiana Limestone Institute of America
LPI	Lightning Protection Institute
MBMA	Metal Building Manufacturers Association
MCAA	Mechanical Contractors Association of America
MIA	Marble Institute of America
ML/SFA	Metal Lath/Steel Framing Association
MSS	Manufacturers Standardization Society of the Valve and Fittings Industry
NAAMM	National Association of Architectural Metal Manufacturers
NAPA	National Asphalt Pavement Association
NBGQA	National Building Granite Quarries Association
NBHA	National Builders Hardware Association
NBS	National Bureau of Standards
NCMA	National Concrete Masonry Association
NCRPM	National Council on Radiation Protection and Measurement
NEC	National Electric Code
NECA	National Electrical Contractors Association
NEII	National Elevator Industry, Inc.
NEMA	National Electrical Manufacturers Association
NFPA	National Fire Protection Association
N.F.P.A.	National Forest Products Association
NHLA	National Hardwood Lumber Association
NOFMA	National Oak Flooring Manufacturers Association

NPA	National Particleboard Association
NPCA	National Paint and Coatings Association
NRCA	National Roofing Contractors Association
NSF	National Sanitation Foundation
NSSEA	National School Supply and Equipment Association
NTMA	National Terrazzo and Mosaic Association
NVPMA	National Veneer and Panel Manufacturers Association
NWMA	National Woodwork Manufacturers Association
NWWDA	National Wood Window and Door Association
OSHA	Occupational Safety and Health Administration
PCI	Prestressed Concrete Institute
PDI	Plumbing and Drainage Institute
PEI	Porcelain Enamel Institute
PS	Office of Product Standards National Bureau of Standards U.S. Department of Commerce
RFCI	Resilient Floor Covering Institute
RIS	Redwood Inspection Service
RMA	Rubber Manufacturers Association
SDI	Steel Deck Institute
S.D.I.	Steel Door Institute
SGCC	Safety Glazing Certification Council
SIGMA	Sealed Insulating Glass Manufacturers Association
SJI	Steel Joist Institute
SMACNA	Sheet Metal and Air Conditioning Contractors National Association
SPIB	Southern Pine Inspection Bureau
SPRI	Single Ply Roofing Institute

SSPC	Steel Structures Painting Council
SWI	Steel Window Institute
TCA	Tile Council of America
TIMA	Thermal Insulation Manufacturers Association
UL	Underwriters Laboratories
USDA	U.S. Department of Agriculture
USDC	U.S. Department of Commerce
WCLIB	West Coast Lumber Inspection Bureau
WCMA	Wall Covering Manufacturers Association
WRI	Wire Reinforcement Institute
WSC	Water Systems Council
WSFI	Wood and Synthetic Flooring Institute
WWPA	Western Wood Products Association
W.W.P.A.	Woven Wire Products Association

END OF SECTION

ALTERATION PROJECT PROCEDURES

PART 1 – GENERAL

Drawings and general provisions of Contract, including General and Supplementary General Conditions and Division-1 Specification sections, apply to work of this section.

1.1 SECTION INCLUDES

A. Products and installation for patching and extending Work.

B. Transition and adjustments.

C. Repair of damaged surfaces, finishes, and cleaning.

1.2 RELATED SECTIONS

A. Section 01039 – Coordination and Meetings.

PART 2 – PRODUCTS

2.1 PRODUCTS FOR PATCHING AND EXTENDING WORK

A. New Materials: As specified in product Sections; match existing Products exactly and work for patching and extending work.

B. Type and Quality of Existing Products: Determine by inspection and testing products where necessary, referring to existing Work as a standard.

PART 3 – EXECUTION

3.1 EXAMINATION

A. Verify that areas are ready for installation of new Work.

B. Beginning of Work means acceptance of existing conditions.

3.2 PREPARATION

A. Cut, move, or remove items as necessary for access to alterations and renovation work. Replace and restore at completion.

B. Remove unsuitable material not marked for salvage, such as rotted wood, corroded metals, and deteriorated masonry and concrete. Replace materials as specified for finished Work.

C. Remove debris and abandoned items from area and from concealed spaces.

D. Prepare surface and remove surface finishes to provide for proper installation of new work and finishes.

E. Close openings in exterior surfaces to protect existing work and salvage items from weather and extremes of temperature and humidity. Insulate ductwork and piping to prevent condensation and freezing in exposed areas.

F. Repair any damages to existing construction due to contractors negligence.

3.3 INSTALLATION

A. Coordinate work of alteration and renovations to expedite completion sequentially and to accommodate Owner occupancy.

B. Project: Complete in all respects including operational mechanical and electrical work.

C. Remove, cut and patch Work in a manner to minimize damage and to provide a means of restoring Products and finishes to original or specified condition.

D. Refinish visible existing surfaces to remain in renovated rooms and spaces, to specified condition for each material, with a neat transition to adjacent finishes.

E. Install Products as specified in individual Sections.

3.4 TRANSITIONS

A. Where new Work abuts or aligns with existing, perform a smooth and even transition. Patched Work to match existing adjacent Work in texture and appearance.

B. When finished surfaces are cut so that a smooth transition with new work is not possible, terminate existing surface along a straight line at a natural line of division and make recommendation to Architect.

3.5 ADJUSTMENTS

A. Where removal of partitions or walls results in combining adjacent rooms, rework floors, walls, and ceilings to a smooth plane without breaks, steps, or bulkheads.

B. Where a change of plane of ¼ inch or more occurs, request instruction from Architect.

3.6 REPAIR OF DAMAGED SURFACES

A. Patch or replace portions of existing surfaces which are damaged, lifted, discolored, or showing other imperfections.

B. Repair substrate prior to patching finish.

3.7 FINISHES

A. Finish surfaces as specified in individual Product Sections.

B. Finish patches to produce uniform finish and texture over entire area. When finish cannot be matched, refinish entire surface to nearest intersections.

3.8 CLEANING

A. In addition to cleaning specified in Section 01500, clean Owner occupied areas of work at end of workday.

END OF SECTION

PROJECT MEETINGS

1.1 PURPOSE

Project meetings shall be held to accomplish the following:

A. Coordinate the Work.

B. Establish a sound working procedure and relationship between the Contractor, all other contractors, and the Architect and the Owner's Representative.

C. Surface problem areas assign responsibilities to appropriate parties: i.e., Architect, Owner Project Officer, or Contractor.

D. Review the progress of the Work, review quality of work in place, review approval required by the Work and review delivery of materials.

E. Expedite the Work to completion within the scheduled time limit.

F. Discuss Environmental, Health and Safety issues to ensure proper working conditions.

1.2 INITIAL JOB MEETING (PRE-CONSTRUCTION MEETING)

A. The Owner's Representative shall call a Pre-Construction meeting, which the Contractor shall attend. This meeting shall be called prior to the start of construction.

1.3 JOB PROGRESS MEETINGS

A. Job progress meetings shall be scheduled by the Architect or Owner's Representative during the course of construction; the Representative shall preside. The Contractor or the Contractor's duly authorized representative and such Subcontractors, Material men and vendors as required by the Contractor or the Architect or Owner's Representative shall be present at all job progress meetings. The Contractors and Subcontractors, Material men and vendors shall answer questions on progress, workmanship, approvals required, delivery of material and other subjects concerning the Work. The purpose of such meetings is to coordinate the efforts of all concerned so that the Work proceeds without delay to completion as required by the Contract.

B. The Design Team or the Owner's Representative may require any schedule to be modified so that changes in the Work, delays or acceleration of any segment of the Work shall be reflected in such schedule. The Contractor shall cooperate with the Owner's Representative in providing data for such changes in, or modifications of, schedules.

C. The Owner's Representative shall provide that minutes of these meetings shall be recorded and typed, and copies shall be distributed to all parties involved.

END OF SECTION

SUBMITTALS

PART 1 – GENERAL

RELATED DOCUMENTS

Drawings and general provisions of Contract, including General and Supplementary General Conditions and Division-1 Specification sections, apply to work of this section.

1.1 SECTION INCLUDES

A. Submittal procedures.
B. Construction progress schedules.
C. Shop drawings.
D. Product data.
E. Samples.
F. Manufacturers' instructions.
G. Manufacturers' certificates.

1.2 RELATED SECTIONS

A. Section 01400 – Quality Control

B. Section 01700 – Contract Closeout

1.3 SUBMITTAL PROCEDURES

A. Transmit each submittal with Contractor's standard transmittal form or cover letter.

B. Sequentially number the transmittal forms. Resubmittals to have original number with an alphabetic suffix.

C. Identify Project, Contractor, Subcontractor, or supplier; pertinent drawing sheet and detail numbers, and specification section number, as appropriate.

D. Apply Contractor's stamp, signed or initialed certifying that review, verification of Products required, field dimensions, adjacent construction work, and coordination of information, is in accordance with the requirements of the Work and Contract Documents.

E. Schedule submittal to expedite the Project, and deliver to Architect at business address. Coordinate submission of related items.

F. Identify variations from Contract Documents and Product or system limitations, which may be detrimental to successful performance of the completed Work.

G. Provide space for Contractor and Architect and Engineer review stamps.

H. Revise and resubmit submittals as required, identify all changes made since previous submittal.

I. Distribute copies of reviewed submittals to concerned parties. Instruct parties to promptly report any inability to comply with provisions.

1.4 CONSTRUCTION PROGRESS SCHEDULES

A. Submit initial progress schedule in duplicate within 7 days after date of Owner-Contractor Agreement for Architect review.

B. Revise and resubmit every two weeks.

C. Submit revised schedules with each Application for Payment, identifying changes since previous versions.

D. Submit a horizontal bar chart with separate line for each major section of Work or operation, identifying first workday of each week.

E. Show complete sequence of construction by activity, identifying Work of separate stages and logically grouped activities. Indicate the early and late start, early and late finish, float dates, and duration.

F. Indicate estimated percentage of completion for each item of Work at each submission.

G. Indicate submittal dates required for shop drawings, product data, samples, and product delivery dates.

1.5 SHOP DRAWINGS

A. Submit six copies.

B. After review, distribute in accordance with Article on Procedures above and provide copies for Record Documents described in Section 01700 – Contract Closeout.

1.6 PRODUCT DATA

A. Submit six copies.

B. Mark each copy to identify applicable products, models, options, and other data. Supplement manufacturers' standard data to provide information unique to this Project.

C. After review, distribute in accordance with Article on Procedures above and provide copies for Record Documents described in Section 01700 – Contract Closeout.

1.7 SAMPLES

A. Submit samples to illustrate functional and aesthetic characteristics of the Product, with integral parts and attachment devices. Coordinate sample submittals for interfacing work.

B. Submit samples of finishes from the full range of manufacturers' standard colors and in custom colors selected, textures, and patterns for selection.

C. Include identification on each sample, with full Project information.

D. Submit the number of samples specified in individual specification sections.

E. Reviewed samples submittal requirements in individual specification sections.

1.8 MANUFACTURER'S INSTRUCTIONS

A. When specified in individual specification Sections, submit manufacturers' printed instructions for delivery, storage, assembly, installation, start-up, adjusting, and finishing, in

quantities specified for Product Data.

B. Identify conflicts between manufacturers' instructions and Contract Documents.

1.9 MANUFACTURER'S CERTIFICATES

A. When specified submit manufacturers' certificate to Architect for review, in quantities specified for Product Data.

B. Indicate material or Product that conforms to or exceeds specified requirements. Submit supporting reference date, affidavits, and certification as appropriate.

C. Certificates may be recent or previous test results on material or Product, but must be acceptable to Architect.

D. Certify that products used are the current production materials.

PART 2 – PRODUCTS

Not Used.

PART 3 – EXECUTION

Not Used.

END OF SECTION

SHOP DRAWINGS AND SAMPLES

1.01 CONTRACTOR SUBMITTAL

A. The Contractor shall submit the Shop Drawings, technical data, and Samples required by the Contract. The Contractor shall adhere to all submittal and scheduling requirements for Shop Drawings and Samples. After examination of such Shop Drawings and Samples by the Architect and the return of such items by the Architect to the Contractor, the Contractor shall make corrections indicated and shall furnish to the Architect the required number of corrected copies of Shop Drawings and Samples.

1.02 SHOP DRAWINGS

A. Shop Drawings shall be accompanied by a letter of transmittal to the Architect or the Owner's Representative requesting approval and date approval is desired.

B. Each Shop Drawings and letter of transmittal shall be identified with the following information:

1. Project title.

2. Contract name and Contract number.

3. Date of the drawing, including dates of any revisions.

4. Name of Contractor, name of Subcontractor, material supplier and manufacturer, as applicable.

5. Name of person or firm preparing Shop Drawings.

6. Contract Drawing numbers and Specifications, Section Division and Paragraph numbers used as references in preparing Shop Drawings, and titles of items to which the Shop Drawings refer.

C. Shop Drawings shall show the design, dimensions, connections and other details necessary to ensure that the Shop Drawings accurately interpret the Contract Documents and shall also show adjoining Work in such Detail as required to provide proper connections with said adjoining Work. Where adjoining connected Work requires Shop Drawings, such Shop Drawings shall be submitted to the Architect or the Owner's Representative for approval at the same time so that connections can be checked.

D. The Contractor shall verify all field measurements. Measurements available prior to submittal of Shop Drawings shall be shown and so noted on the Shop Drawings. Measurements not available prior to submission of Shop Drawings shall be noted on the Shop Drawings as not available and such measurements shall be obtained prior to fabrication.

E. The Contractor shall submit manufacturer's drawings and specifications when necessary to fully explain apparatus and equipment required by the Work. These manufacturer's drawings and specifications shall be treated as Shop Drawings. Manufacturer's catalog numbers alone are <u>not</u> acceptable as sufficient information for compliance with this requirement.

1.03 PROCEDURE FOR SUBMITTAL AND APPROVAL OF ALL SHOP DRAWINGS

A. After approval of the required Shop Drawings Schedule, the Contractor shall submit 6 prints or 5 prints and one sepia of Shop Drawings and product data to the Architect or the, or designated Representative for review and approval. A satisfactory Shop Drawing will be stamped "Approved" or "Approved As Noted," and dated; 3 prints or 2 prints and one sepia will be returned to the Contractor.

B. Should the Shop Drawings not be approved by the Architect or the Designated Representative, it will be stamped "Not Approved" and two sets of such Shop Drawings will be returned to the Contractor with the necessary corrections and changes to be made in accordance with the notations indicated thereon.

C. The Contractor shall make such corrections and changes and again submit 6 prints or 5 prints and one sepia of the Shop Drawings and product data for the approval of the Architect or the or the. The Contractor shall revise and resubmit the Shop Drawings as required by the Architect or the Designated Representative or the or the until approval thereof is obtained.

1.04 TRANSMITTALS, RESPONSIBILITY, SCHEDULE, PROCEDURES

A. Copies of Transmittals - Copies of all Shop Drawing transmittal letters from the Contractor shall be sent to the Architect's.

B. Variations - If the Shop Drawings show variations from the Contract requirements because of standard shop practice, or other reasons, the Contractor shall make specific mention of such variations in the letter of transmittal.

C. Responsibility of Contractor

1. The approval of Shop Drawings will be general and shall not relieve the Contractor of responsibility for the accuracy of such Shop Drawings, nor for the proper fitting and construction of the Work, nor of the furnishing of materials or Work required by the Contract and not indicated on the Shop Drawings. Approval of Shop Drawings shall not be construed as approving departures from the Contract Drawings, Supplementary Drawings or Specifications.

2. Contractor shall be responsible for coordinating Shop Drawings of the various trades before submittal so as to avoid conflicting locations and conflicting routing of items and interference between items. Corrections resulting from such conflicts and interference shall be made by and at the expense of the Contractor.

D. Shop Drawing Schedule - To enable the Work to be transacted in an orderly and expeditious manner, the Contractor shall within thirty (30) days after the Notice to Proceed, unless otherwise directed by the Architect or the Designated Representative, submit a proposed progress schedule showing the anticipated time of commencement and completion of the submission of Shop Drawings for each of the various operations to be performed under the Contract.

The Shop Drawing schedule shall be interfaced with the Construction Progress Schedule required by another Article in the General Requirements.

E. Procedure for preparing, forwarding, checking and returning of all Shop Drawings shall be generally as follows:

1. The Contractor shall make available to the Contractor's Subcontractors the necessary Contract Documents and have them determine dimensions and conditions in the field, particularly with reference to coordination with other trades or work under other contracts;

2. The Contractor shall direct the Subcontractors to prepare Shop Drawings for submission to the Architect or the Designated Representative, in accordance with the requirements of these "General Requirements".

3. The Contractor shall also direct the Contractor's Subcontractors to flag or circle corrections made on all resubmission's for approval, so as to be readily seen, and that the symbol "Sub" be used to identify the source of correction or information that has been added.

4. The Contractor shall:

a. Review and be responsible to the Architect for information shown on Subcontractor's shop and installation drawings and manufacturer's data, and also for conformity to Contract Documents.

b. Flag corrections made on all submissions for approval, so as to be readily seen, use the symbols "GC", "PL", "MECH" and "EL" to indicate that the correction and/or information added was made by the respective Subcontractor.

c. Clearly designate which trade is to perform the work when the use of "Work by Others" or other similar phrases are indicated on the Drawings before submission to the Owner's Representative.

d. Stamp all submissions "Recommended for Approval", date and forward required copies to the Owner's Representative.

F. In order to expedite shop drawing procedures, the Contractor shall write a bi-weekly Shop Drawing status letter to the Architect and copies to the Field Representative, containing the following subject matter:

1. A list of all Shop Drawings which have been sent to but not returned by the Architect, giving name of the Subcontractor, Drawing number, title and date of submission.

2. An indication of the desired priority of the return, if necessary.

Note: The status letter shall be prepared and sent at a given time, preferably Friday afternoon, to enable the Architect to receive the letter on Monday morning. This procedure shall be maintained throughout the active Shop Drawing period of construction.

1.05 SAMPLES

A. A letter of transmittal shall accompany samples to the Owner's Representative requesting approval, and date approval is desired.

B. Each sample shall be labeled with the following information:

1. Project title.

2. Contract name.

3. Date of submission.

4. Name and quality of the material.

5. Name of Contractor, name of Subcontractor, Material Supplier and Manufacturer, as applicable.

6. Contract Drawing numbers and Specification Section, Division and Paragraph numbers used as reference in preparing Samples.

C. Samples on Display - When Samples are specified to be equal to samples in the specifications or drawings, they shall be carefully compared to such samples for verification that they are equal in all respects.

D. Samples shall be of sufficient size and quantity to show the quality, type, color, finish and texture of the material required to be furnished by the Contractor pursuant to the Contract. Furnish specific sizes and quantities where indicated in the respective technical Sections.

E. Valuable Samples, such as hardware, plumbing and electrical fixtures, not destroyed by inspection or test, will be returned to the Contractor and may be incorporated into the Work after all questions of acceptability have been settled, providing suitable permanent records are made as to location of the Samples, their properties, and other pertinent information.

1.06 CONTRACTOR RESPONSIBILITY

A. The Architect's approval of Shop Drawings and samples shall not relieve the Contractor of responsibility for any deviation from the requirements of the Contract. The Contractor shall be responsible for the accuracy of the Shop Drawings and Samples and for the conformity of Shop Drawings and Samples with the Contract unless the Contractor has notified the Architect of the deviation in writing at the time of submission and has received from the Architect written approval of the specified deviations. The Architect's approval shall not relieve the Contractor of responsibility for errors or omissions in the Shop Drawings and Samples.

1.07 COMMENCEMENT OF WORK

A. No portion of the Work shall be commenced until required Shop Drawings and Samples are approved by the Architect.

END OF SECTION

QUALITY CONTROL

PART 1 – GENERAL

RELATED DOCUMENTS

Drawings and general provisions of Contract, including General and Supplementary General Conditions and Division-1 Specification sections, apply to work of this section.

1.1 SECTION INCLUDES

A. Quality assurance and control of installation.

B. References.

C. Inspection and testing laboratory services.

1.2 RELATED SECTIONS

A. Section 01300 - Submittals

B. Section 01600 – Material and Equipment

1.3 QUALITY ASSURANCE/CONTROL OF INSTALLATION

A. Monitor quality control over suppliers, manufacturers, Products, services, site conditions, and workmanship, to produce Work of specified quality.

B. Comply fully with manufacturers' instructions, including each step in sequence.

C. Should manufacturers' instructions conflict with Contract Documents, request clarification from Architect before proceeding. Architect's decision is final.

D. Comply with specified standards as a minimum quality for the Work except when more stringent tolerances, codes, or specified requirements indicate higher standards or more precise workmanship.

E. Perform work by persons qualified to produce workmanship or specified quality. As per manufacturer's direction and as per individual specification section.

F. Secure Products in place with positive anchorage devices designated and sized to withstand stresses, vibration, physical distortion or disfigurement.

1.4 REFERENCES

A. Conform to reference standards that are most current to the date of the bids.

B. Should specified reference standards conflict with Contract Documents, request clarification from Architect before proceeding. Architect's decision is final.

C. The contractual relationship of the parties to the Contract shall not be altered from the Contract Documents by mention or inference otherwise in any reference documents.

1.5 INSPECTION AND TESTING LABORATORY SERVICES

A. In addition to testing specified in individual sections to be Contractor's responsibility, the Owner may employ and pay for services of an independent firm to perform inspection and testing.

B. Contractor is to cooperate and coordinate with independent testing firm:

1. Furnish samples of materials, design mix, equipment, tools, storage and assistance as requested.

2. Notify Owner and independent testing firm 24 hours prior to expected time for operations requiring services.

3. Make arrangements with independent firm and pay for additional samples and test required for Contractor's own use.

C. Retesting required because of nonconformance to specified requirements shall be performed by the same independent firm on instructions by the Owner. Payment for retesting will be charged to the Contractor by deducting inspection or testing charges from the Contract Sum.

PART 2 – PRODUCTS

Not Used.

PART 3 – EXECUTION

Not Used.

END OF SECTION

SPECIAL INSPECTIONS & STRUCTURAL TESTING

PART 1 – GENERAL

RELATED DOCUMENTS

Drawings and general provisions of Contract, including General and Supplementary General Conditions and Division-1 Specification sections, apply to work of this section.

1.1 GENERAL REQUIREMENTS

A. Special Inspections and Structural Testing shall be in accordance with Chapter 17 of the *Connecticut State Building Code.*

1.2 QUALIFICATIONS

A. The testing laboratory shall be NVLAP accredited and approved by the Structural Engineer of Record (SER) / Special Inspector and Building Official.

B. The testing laboratory shall maintain a full time Professional Engineer licensed in the State of Connecticut on staff who shall stamp and sign all test reports. The Professional Engineer shall be responsible for the training of the testing technicians and shall be in responsible charge of the field and laboratory testing operations.

C. Special Inspections shall be performed by inspectors who are either Professional Engineers (P.E.) or Engineers-In-Training (EIT) with an education and background in structural engineering except as indicated below.

1. Special Inspections of soils and foundations may be performed by inspectors who are either Professional Engineers (P.E.) or Engineers-In-Training (EIT) with an education and background in geotechnical engineering.

2. Technicians performing tests of concrete shall be ACI certified *Concrete Field Testing Technicians – Grade 1.*

3. Inspectors performing inspections of concrete work may be ACI certified *Concrete Construction Inspectors* in lieu of being a P.E. or EIT.

4. Technicians performing tests or inspections of welds shall be AWS *Certified Welding Inspectors,* technicians performing ultrasonic testing shall also be certified as an ASNT-TC Level II or Level III technician.

5. Technicians performing standard tests described by specific ASTM Standards shall have training in the performance of such tests and must be able to demonstrate either by oral or written examination competence for the test to be conducted. They shall be under the supervision of a Professional Engineer and shall not be permitted to independently evaluate test results.

1.3 SUBMITTALS

A. The Testing Laboratory shall submit to the SER / Special Inspector and Building Official for review a copy of their qualifications which shall include the names and qualifications of each of the individual inspectors and technicians who will be performing inspections or tests.

B. The Testing Laboratory shall disclose any past or present business relationship or potential conflict of interest with the Contractor or any of the Subcontractors whose work will be inspected or tested.

1.4 PAYMENT

A. The Owner shall engage and pay for the services of the Special Inspector and Testing Laboratory.

B. If any materials which require Special Inspections are fabricated in a plant, which is not located in Connecticut, the Contractor shall be responsible for the travel expenses of the Special Inspector or Testing Laboratory.

C. The Contractor shall be responsible for the cost of any retesting or reinspection of work which fails to comply with the requirements of the Contract Documents.

1.5 CONTRACTOR RESPONSIBILITIES

A. The Contractor shall cooperate with the Special Inspector and his agents so that the Special Inspections and testing may be performed without hindrance.

B. The Contractor shall notify the Testing Laboratory and Special Inspector at least 24 hours in advance of a required inspection or test.

C. The Contractor shall provide incidental labor and facilities to provide access to the work to be inspected or tested, to obtain and handle samples at the site or at source of products to be tested, to facilitate tests and inspections, storage and curing of test samples.

D. The Contractor shall keep at the project site the latest set of construction drawings, field sketches, approved shop drawings, and specifications for use by the inspectors and testing technicians.

E. The Special Inspection program shall in no way relieve the Contractor of his obligation to perform work in accordance with the requirements of the Contract Documents or from implementing an effective Quality Control program.

F. The Contractor shall be solely responsible for construction site safety.

1.6 LIMITS ON AUTHORITY

A. The Testing Laboratory may not release, revoke, alter, or enlarge on the requirements of the Contract Documents.

B. The Special Inspector or Testing Laboratory will not have control over the Contractor's means and methods of construction.

C. The Special Inspector or Testing Laboratory shall not be responsible for construction site safety.

D. The Special Inspector or Testing Laboratory has no authority to stop the work.

1.7 STATEMENT OF SPECIAL INSPECTIONS

A. The *Statement of Special Inspections* will be prepared by the Structural Engineer of Record (SER) / Special Inspector.

B. CEPP/SEC Form 101 – 1993 shall be used for the *Statement of Special Inspections.*

C. The *Statement of Special Inspections* shall be submitted with the application for Building Permit.

1.8 RECORDS AND REPORTS

A. Detailed reports shall be prepared of each inspection or test. Reports shall include:
   1. date of test or inspection
   2. name of inspector or technician
   3. location of specific areas tested or inspected
   4. description of test or inspection and results
   5. applicable ASTM standard
   6. weather conditions
   7. Professional Engineer's stamp and signature

B. Interim reports shall be submitted at the end of each week which include reports for all inspections and tests performed that week.

C. Reports shall be addressed to the Building Official with copies sent to the SER, Architect, and Contractor.

D. Any discrepancies from the Contract Documents found during a Special Inspection shall be immediately reported to the Contractor. If the discrepancies are not corrected, the Testing Laboratory shall notify the SER and Building Official.

E. The Testing Laboratory shall immediately notify the SER by telephone or fax of any test results which fail to comply with the requirements of the Contract Documents.

F. Reports shall be submitted within 7 days of the inspection or test. Hand written reports may be submitted if final typed copies are not available.

G. At the completion of the work requiring Special Inspections, each inspection agency and testing laboratory shall provide a statement to the Special Inspector that all work was completed in substantial conformance with the Contract Documents and that all appropriate inspections and tests were performed.

1.9 REPORT OF SPECIAL INSPECTIONS

A. The *Final Report of Special Inspections* shall be completed by the Special Inspector and submitted to the Building Official prior to the issuance of a Certificate of Use and Occupancy.

B. CEPP/SEC Form 102 – 1993 shall be used for the *Final Report of Special Inspections*.

C. The *Final Report of Special Inspections* will certify that all required inspections have been performed and will itemize any discrepancies which were not corrected or resolved.

1.10 SCHEDULE OF INSPECTIONS AND TESTS

A. Required inspections and tests are described in the attached Schedule of Special Inspections and/or within the individual specification Sections for the items to be inspected or tested.

END OF SECTION

CONSTRUCTION FACILITIES & TEMPORARY CONTROLS

PART 1 – GENERAL

RELATED DOCUMENTS

Drawings and general provisions of Contract, including General and Supplementary General Conditions and Division-1 Specification sections, apply to work of this section.

1.1 SECTION INCLUDES

A. Temporary Utilities: Electricity, lighting, heat, ventilation, telephone service, water, and sanitary facilities.

B. Temporary Controls: Barriers, enclosures and fencing, protection of the Work, water control and security.

C. Progress Cleaning.

D. Construction Facilities: Field Office.

1.2 RELATED SECTIONS

A. Section 01700 – Contract Closeout: Final cleaning.

1.3 TEMPORARY ELECTRICITY

A. Connect to power service as agreed upon by Owner.

B. Owner will pay cost of energy used. Exercise measures to conserve energy.

C. Provide power outlets for construction operations, with branch wiring and distribution boxes. Provide flexible power cords as required.

D. Permanent convenience receptacles may be utilized during construction.

1.4 TEMPORARY LIGHTING

A. Provide and maintain lighting for construction operations.

B. Provide and maintain lighting to exterior staging and storage areas after dark for security purposes.

C. Provide branch wiring from power source to distribution boxes with lighting conductors, pigtails, and lamps as required.

D. Maintain lighting and provide routine repairs.

1.5 TEMPORARY VENTILATION

A. Contractor shall ventilate enclosed areas to assist cure of materials, to dissipate humidity, and to prevent accumulation of dust, fumes, vapors, or gases.

1.6 TEMPORARY WATER SERVICE

A. Contractor will connect to existing water source for construction operations.

B. Owner will pay cost of water used. Exercise measures to conserve water.

C. Extend branch piping with outlets located so water is available by hoses with threaded connections.

1.7 TEMPORARY SANITARY FACILITIES

A. Contractor shall provide and maintain temporary sanitary facilities and enclosures. Contractor may not use facilities in the building.

B. Contractor is responsible for maintaining the facilities during the entire period and return to the Owner at the end of the construction period at or exceed the original conditions.

1.8 BARRIERS

A. Provide barriers to prevent unauthorized entry to construction areas and to protect existing facilities and adjacent properties from damage from construction operations and demolition.

B. Protect non-contractor vehicular traffic, stored materials, site and structures from damage.

1.9 EXTERIOR ENCLOSURES

A. Provide temporary insulated weather-tight closure of exterior openings to accommodate acceptable working conditions and protections for Products, to allow for temporary heating and maintenance of required ambient temperatures identified in individual specification Sections, and to prevent entry of unauthorized persons. Provide access doors with self-closing hardware and locks.

1.10 FENCING

A. Construction: Provide 6 foot high chain link or plastic fencing around construction site: equip with vehicular and pedestrian access gates with locks.

1.11 WATER CONTROL

A. Grade site to drain. Maintain excavation free of water. Provide, operate and maintain pumping equipment.

B. Protect site from puddling or running water. Provide erosion control measures as required to protect site from soil erosion.

1.12 PROTECTION OF INSTALLED WORK

A. Protect installed Work and provide special protection where specified in individual specification Sections.

1.13 SECURITY

A. It shall be the Contractor's responsibility to secure the site and building until substantial completion.

1.14 PARKING

A. Restrict parking of construction vehicles to the site as necessary.

1.15 PROJECT IDENTIFICATION

A. Provide a project sign of exterior grade plywood and wood frame construction, painted, with exhibit lettering by professional sign painter.

1.16 PROGRESS CLEANING

A. Maintain areas free of waste materials, debris, and rubbish. Maintain site in a clean and orderly condition.
B. Remove waste materials, debris, and rubbish from site weekly and dispose off-site.

1.17 FIELD OFFICE

A. Contractor will provide a field office. Weather-tight with lighting, electrical outlets, heating, cooling and ventilating equipment, and equipped with sturdy furniture and have space to accommodate (8) persons for project meetings.

B. Contractor shall be responsible for providing any furnishing and equipment necessary for the display and reference use of the construction documents, shop drawings and other materials during the entire construction period.

C. Contractor shall equip with a telephone and fax machine and use such office as the office of the construction superintendent.

1.18 REMOVAL OF UTILITIES, FACILITIES, AND CONTROLS

A. Remove temporary above grade or buried utilities, equipment, facilities, materials, prior to Substantial Completion.

B. Clean and repair damage caused by installation or use of temporary work.

C. Restore existing facilities used during construction as near as practical to original condition. Restore permanent facilities used during construction to specified condition.

PART 2 – PRODUCTS
Not Used.

PART 3 – EXECUTION
Not Used.

END OF SECTION

MATERIAL AND EQUIPMENT

PART 1 – GENERAL

RELATED DOCUMENTS

Drawings and general provisions of Contract, including General and Supplementary General Conditions and Division-1 Specification sections, apply to work of this section.

1.1 SECTION INCLUDES

A. Products.

B. Transportation and handling.

C. Storage and protection.

D. Product options.

E. Substitutions.

1.2 RELATED SECTIONS

A. Section 01400 – Quality Control.

1.3 PRODUCTS

A. Products: Means latest production material, machinery, components, equipment, fixtures, and systems forming the Work. Does not include machinery and equipment used for preparation, fabrication, conveying and erection of the Work. Products may also include existing materials or components required for reuse.

B. Do not use materials and equipment removed from existing premises, except as specifically permitted by the Contract Documents.

C. Provide interchangeable components of the same manufacturer, for similar components.

1.4 TRANSPORTATION AND HANDLING

A. Transport and handle Products in accordance with manufacturer's instructions.

B. Promptly inspect shipments to assure that Products comply with requirements, quantities are correct, and Products are undamaged.

C. Provide equipment and personnel to handle Products by methods to prevent soiling, disfigurement, or damage.

1.5 STORAGE AND PROTECTION

A. Store and protect Products in accordance with manufacturer's instructions, with seals and labels intact and legible. Store sensitive Products in weather-tight, climate controlled enclosures.

B. For exterior storage of fabricated Products, place on sloped supports, above ground.

C. Provide off-site storage and protection when site does not permit on-site storage or protection.

D. Cover Products subject to deterioration with impervious sheet covering. Provide ventilation to avoid condensation.

E. Store loose granular materials on solid flat surfaces in a well-drained area. Prevent mixing with foreign matter.

F. Provide equipment and personnel to store Products by methods to prevent soiling, disfigurement, or damage.

G. Arrange storage of Products to permit access for inspection. Periodically inspect to assure Products are undamaged and are maintained under specified conditions.

1.6 PRODUCT OPTIONS

A. Products Specified by Reference Standards or by Description Only: Any Product meeting those standards or description.

B. Product Specified by Naming One or More Manufacturers: Products of manufacturers named and meeting specifications, no options or substitutions allowed.

C. Products Specified by Naming One or More Manufacturers with a Provision for Substitutions: Submit a request for substitution for any manufacturer not named.

D. Products specified by naming one manufacturer without a provision for substitution: no substitution allowed.

1.7 SUBSTITUTIONS

A. AIA document A701 – Instructions to Bidders specify time restrictions for submitting requests for Substitutions during the bidding period. In any case, substitutions during bidding are only acceptable if such substitutions are issued as addendum items.

B. Substitutions may be considered when a Product becomes unavailable through no fault of the Contractor.

C. Document each request with complete data substantiating compliance of proposed Substitution with Contract Documents.

D. A request constitutes a representation that the Contractor:

1. Has investigated proposed Product and determined that it meets or exceeds the quality level of the specified Product.

2. Will provide the same warranty for the Substitution as for the specified Product.

3. Will coordinate installation and make changes to other Work, which may be required for the Work to be complete with no additional cost to the Owner.

4. Waives claims for additional costs or time extension, which may subsequently become apparent.

5. Will reimburse Owner for review or redesign services associated with reapproval by authorities.

E. Substitutions will not be considered when they are indicated or implied on shop drawings or product data submittals, without separate written request, or when acceptance will require revision to the Contract Documents.

F. Substitution Submittal Procedure:

1. Submit four copies of request for Substitution for consideration. Limit each request to one proposed Substitution.

2. Submit shop drawings, product data, and certified test results attesting to the proposed product equivalence.

3. The Architect will notify the Contractor, in writing, of decisions to accept or reject request.

PART 2 – PRODUCTS
Not Used.

PART 3 – EXECUTION
Not Used.

END OF SECTION

PRODUCT OPTIONS AND SUBSTITUTIONS

1.1 TIME ALLOWED

A. To be considered for approval, the requests by the Contractor to use optional products and to make substitutions shall be made to the Architect within the number of days after Notice to Proceed, as indicated in the following Schedule:

Number of Calendar Days for Completion of Project	Number of Calendar Days After Notice to Proceed
180 and Fewer	Thirty (30)

Requests will not be considered if made for a certain item or items if made at such date, which will not allow time for proper Architect analysis and determination for decision before need for incorporation of item or items in the Work of the Project.

Consideration for approval will be as stipulated in Article 4, Section 4.03 of the General Conditions.

1.2 INFORMATION FOR SUBMITTAL

A. Submit product literature, samples, drawings, life cycle cost data, maintenance data, and other pertinent documentation that the Architect may reasonably require to make a proper analysis and determination.

1.3 APPROVAL DECISION

A. The decision for approval or rejection of a product option or substitution shall rest solely with the Architect.

1.4 ACCOMMODATIONS FOR SUBSTITUTIONS

A. In the event substitute products and systems, which are, accepted cause accommodations incurring additional costs, such costs shall be borne by the Contractor.

END OF SECTION

CONTRACT CLOSEOUT

PART 1 – GENERAL

RELATED DOCUMENTS

Drawings and general provisions of Contract, including General and Supplementary General Conditions and Division-1 Specification sections, apply to work of this section.

1.1 SECTION INCLUDES

A. Closeout Procedures.

B. Final Cleaning.

C. Adjusting.

D. Project Record Documents.

E. Operation and Maintenance Data.

F. Warranties.

G. Spare Parts and Maintenance Materials.

1.2 RELATED SECTIONS

A. Section 01500 – Construction Facilities and Temporary Controls: Progress cleaning.

1.3 CLOSEOUT PROCEDURES

A. Submit written certification that Contract Documents have been reviewed, Work has been inspected, and that Work is complete in accordance with Contract Documents and ready for Owner's inspection.

B. Schedule final inspection with Owner's representative and Architect.

C. If during final inspection, Owner's representative or the Architect found more than five items not completed, the inspection will be terminated and the contractor will complete all work and reschedule final inspection.

D. On the second inspection, if more than five items are again found to be not completed, the Owner may consider action to terminate the contract and deduct the cost for completion by third party.

E. Provide submittals to Owner that are required by governing or other authorities.

F. Submit final Application for Payment identifying total adjusted Contract Sum, previous payments, and sum remaining due.

1.4 FINAL CLEANING

A. Execute final cleaning prior to final inspection.

B. Clean equipment and fixtures to a sanitary condition.

C. Clean site; sweep paved areas, rake clean landscaped surfaces.

D. Remove waste and surplus materials, rubbish, and construction facilities from the site.

1.5 ADJUSTING

A. Adjust operating Products and equipment to ensure smooth and unhindered operation and compliance with warrantee.

1.6 PROJECT RECORD DOCUMENTS

A. Maintain on site, two sets of the following record documents; record actual revisions to the Work:

1. Contract Drawings
2. Specifications.
3. Addenda.
4. Change Orders and other Modifications to the Contract.
5. Reviewed shop drawings, product data, and samples.

B. Store one set of Record Documents separate from documents used for construction.

C. Record information concurrent with construction progress on an up-to-date set of red-marked, annotated as-built drawings, to be furnished to the Owner upon completion of construction.

D. Specifications: Legibly mark and record at each Product section description of actual Products installed, including the following:

1. Manufacturer's name and product model and number.

2. Product substitutions or alternates utilized.
3. Changes made by Addenda and Modifications.

E. Record Documents and Shop Drawings: Legibly mark each item to record actual construction including:

1. Measured locations of internal utilities and appurtenances concealed in construction, reference to visible and accessible features of the Work.

2. Field changes of dimension and detail.

3. Details not on original Contract Drawings.

F. Delete Architect title block and seal from all documents.

G. Submit documents to Owner with claim for final payment.

1.7 OPERATION AND MAINTENANCE DATA

A. Submit three sets prior to final inspection, bound in 8-½ x 11 inch text pages, three side ring capacity expansion binders with durable plastic covers.

B. Prepare red binder covers with printed title "OPERATION AND MAINTENANCE INSTRUCTIONS", title of project.

C. Internally subdivide the binder contents with permanent page dividers, logically organized as described below; with tab titling clearly printed under reinforced laminated plastic tabs.

D. Contents: Prepare a Table of Contents for each volume, with each Product or system description identified, type on 24 pound white paper.

E. Part 1: Directory, listing names, addresses, and telephone number of Architect, Consultants, Contractor, Subcontractors, and major equipment suppliers.

F. Part 2: Operation and maintenance instructions, arranged by system and subdivided by specification section. For each category, identify names, addresses, and telephone number of Subcontractors and suppliers. Identify the following:

1. Significant design criteria.

2. List of equipment.

3. Parts list for each component.

4. Operating instructions.

5. Maintenance instructions for equipment and systems.

6. Maintenance instructions for (special) finishes, including recommended cleaning methods and materials and special precautions identifying detrimental agents.

G. Part 3: Project documents and certificates, including the following:

1. Shop drawings and product data.

2. Certificates.

1.8 WARRANTIES

A. Provide duplicate notarized copies.

B. Execute and assemble documents from Subcontractors, suppliers, and manufacturers.

C. Submit three sets of Warranties with Table of Contents, prior to final inspection, bound in 8 ½ x 11 inch text pages, three side ring capacity expansion binders with durable plastic covers.

D. For items of Work delayed beyond date of Substantial Completion, provide updated submittal within ten days after acceptance as start of warranty period.

1.9 SPARE PARTS AND MAINTENANCE MATERIALS

A. Provide products, spare parts, maintenance and extra materials in quantities specified in individual specification Sections.

B. Deliver to Project site and place in location as directed; obtain receipt prior to final payment.

PART 2 – PRODUCTS
Not Used.

PART 3 – EXECUTION
Not Used.

END OF SECTION

PROJECT RECORD DOCUMENTS

1.1 PROJECT RECORD DRAWINGS

A. The purpose of the Project Record Drawings is to record the actual location of the Work in place, including, but not limited to, underground lines, concealed piping within buildings, concealed valves and control equipment, connections, switches, and cut-outs, and to record changes in the Work.

B. In addition to the sets of Contract Drawings that are required by the Contractor on the Site to perform the Work, the Contractor shall maintain, at the Site, one (1) copy of all Drawings, Specifications and Addenda that are part of the Contract as awarded. Each of these documents shall be clearly marked "Project Record Drawing" as indicated below, maintained in a clean and neat condition available at all times for inspection by the Architect and shall not be used for any other purpose during the progress of the Work.

1. Each record drawing shall bear the legend "PROJECT RECORD DRAWING" in heavy block lettering, 1/2" high and contain the following data:

PROJECT RECORD DRAWING

a. Contractor's Name_____

Contractor's Address_____

Made by_____ Date_____

b. Checked by_____ Date_____

2. Where possible, changes from the Contract Drawings shall be conspicuously encircled.

C. Project Record Requirements

1. The Contractor shall mark-up the "Project Record Drawing" to show:

a. Approved changes in the Work.
b. Location of underground Work and concealed Work.
c. Details not shown in the original Contract Documents.
d. All relocations of Work.
e. All changes in dimensions.
f. All access doors.
g. Location of all plumbing, heating, ventilating, air conditioning and electrical assemblies.

2. Such information shall include, but shall not be limited to:

a. Footing depth in relation to finished grade elevations.
b. All changes in floor elevations.
c. All structural changes.
d. All substitutions.
e. Elevations and locations of all underground utilities, services, or structures referenced to permanent above-ground structures or monuments.

f. Designation of all utilities as to the size and use of such utilities.
g. All invert elevations of manholes.
h. The location of all utilities, services and appurtenances concealed in building structures that have been installed different from that required by the Contract.
i. All approved change orders.

D. The Contractor shall keep the Project Record Documents up-to-date from day to day as the Work progresses. Appropriate documents are to be updated promptly and accurately; no Work is to be permanently concealed until all required information has been recorded.

E. Each month these record drawings will be examined by the Architect's Field Representative prior to recommending the approval of the partial payment request to ascertain that the record prints reflect the changes to date.

F. Record Shop Drawings: If installed equipment is at variance with the respective approved Shop Drawing, the Contractor shall furnish to the Architect's Field Representative revised Shop Drawings indicating the actual completed installation.

G. As-Built Drawings:

1. At the conclusion of the job, the Contractor shall have transfer all the changes appearing on the Record Prints to two (2) sets of Mylar reproductions of the original contract tracings. The title block for the Mylar reproductions shall include the name of the Contractor or the name of the Consultant who prepared the reproductions.

2. Two (2) sets of prints of Mylar "as-built" tracings will be provided to the Architect's Field Representative for approval as many times as is required until the prints are approved as reflecting the "as-built" installation.

H. Shop Drawings for Permanent Records - In addition to the drawings required as above mentioned, the Contractor shall submit a list of all approved Shop Drawings of the Work as installed. From this list the Architect's Field Representative will select the drawings desired for permanent records. The Contractor shall furnish these in a bound set to the Architect's Field Representative.

I. All of the above listed requirements of this Article shall be at the Contractor's expense.

J. The Project Record Drawings are to be submitted by the Contractor to the Architect when all the Work is completed and shall be approved by the Architect before the Contractor may request final payment.

K. Final payment shall be contingent on completion of the above listed requirements in this Section.

END OF SECTION

GUARANTEES, WARRANTIES, BONDS AND MAINTENANCE CONTRACTS

1.1 CONTRACTOR'S GUARANTEE

A. Guarantee shall be as stipulated in Article 18 of the General Conditions.

B. Manufacturers' warranties and guarantees shall be as stipulated in Article 6, Section 6.07 of the General Conditions.

C. The Contractor shall furnish a written guarantee in the following form:

"GUARANTEE"

PROJECT_____

CONTRACT NO._____

The Contractor hereby guarantees that the Work specified for the aforesaid Contract will be free from defects of material and workmanship for a period as specified in the General Conditions.

The Contractor also guarantees that the Contractor will repair or replace, whichever may be deemed necessary by the Architect, all defective material or workmanship of the Work, that may appear within the guarantee period, to the satisfaction of the Architect and without any cost or expense to the Architect.

_____
Contractor

By_____

Date_____

Sworn to me before this

_____ day of_____, 20___

_____ Notary Public

D. Scheduling of corrective Work will be determined by the Architect. Work required to correct defective material or workmanship during the guarantee periods shall be done by the Contractor without cost to the Owner.

E. Should the Contractor fail to remedy defects immediately, the Owner may Furnish such materials and labor as are necessary to bring the Work to the standard called for and the Contractor shall reimburse the Owner in full immediately.

1.2 WARRANTIES AND GUARANTEES (OTHER THAN CONTRACTOR'S)

A. Warranties and guarantees as specified in the respective Sections for products and systems shall be in addition to the Contractor's guarantee, and shall be for such periods and with such conditions as stipulated.

1.3 BONDS

A. The Contractor shall provide bonds as stipulated in Article 14 of the General Conditions.

1.4 MAINTENANCE CONTRACTS

Note to Specifier:

1. Projects which require a prime contractor shall not have maintenance Contracts.

2. For projects which are to be bid as specialty projects: boiler burner replacement, air conditioning upgrading and others as determined by the Architect, provide a two year Contractor's guarantee in the base bid; with an alternate bid providing for a five year equipment maintenance.

A. The maintenance contract shall provide for periodic surveillance of the respective equipment and maintenance as stipulated in the respective technical Sections and shall include, but be not limited to the following:

1. Adjusting for proper operation.

2. Replacing or repairing defective components.

3. Lubricating.

END OF SECTION

GENERAL STANDARDS

PART 1 – GENERAL

RELATED DOCUMENTS

Drawings and general provisions of Contract, including General and Supplementary General Conditions and Division-1 Specification sections, apply to work of this section.

1.1 SECTION INCLUDES

A. General Standards.

1.2 RELATED WORK SPECIFIED ELSEWHERE

A. Material and Equipment: Section 01600.

B. The Specification Section for that Work.

1.3 GENERAL STANDARDS APPLICABLE TO ALL SPECIFICATION SECTIONS

A. These provisions, standards, and tolerances shall apply to all work under this contract. Where stricter standards and tolerances are specified, they shall take precedence over these standards and tolerances.

1. Some of the requirements specified in this Section are performance requirements. The Architect will cooperate in deciding how best to make the work conform to these performance requirements, and he will issue prompt interpretations and explanations of these requirements when requested to do so.

B. Build and install parts of the work level, square, plumb, and in correct position unless specifically shown or specified elsewhere.

1. No part shall be out of plumb, level, square, or correct position so much as to impair its function or that of the project.

2. No part shall be out of plumb, level, square, or correct position so much as to impair the aesthetic effect of the part of the project as judged by the Architect.

3. The following tolerances shall apply to plane surfaces unless stricter tolerances are specified. These tolerances shall not apply to work for which, in the Architect's interpretation, they are clearly inappropriate.

a) No point in the plane surface shall be out of correct position by more than 1/8".

b) No tangent to the plane surface shall vary from the vertical, horizontal, or other indicated plane by more than ½" in 12'.

C. Make joints tight and neat. If such is impossible, apply moldings, sealant, or other closure as directed by Architect.

D. Under potentially damp conditions, provide galvanic insulation between different metals which are not adjacent on the galvanic scale.

E. All fasteners used by all trades on the exterior of the building and where dampness and corrosion can reasonably be anticipated shall be corrosion resistant.

1. Fasteners used for exterior wood trim, whether set and puttied or not, shall be stainless steel or aluminum.

2. Fasteners for other carpentry on the exterior or in potentially damp locations shall be stainless steel, aluminum, or hot dip galvanized steel.

3. Fasteners for copper and brass in all locations and under all conditions shall be copper or brass.

4. Fasteners for stainless steel shall be stainless steel.

5. Fasteners for aluminum shall be stainless steel or aluminum.

6. Fasteners for ferrous metals shall be galvanized or stainless steel.

7. Fasteners for other materials on the exterior of the building and where dampness and corrosion can reasonably be anticipated shall be one of the types specified above.

8. If corrosion resistant fasteners are not available, notify Architect. Architect will direct alternative protection.

F. Apply protective finish to parts of the work before concealing parts. For example, paint door tops and bottom before hanging doors, and paint corrosible mounting plates before installing parts over them.

1. Paint other concealed materials with same primer and finish specified for exposed surfaces. If concealed materials are fully covered, primer alone is sufficient.

2. Concealed parts, which are already corrosion protected, need not be painted unless specified otherwise.

G. Manufacturers, subcontractors, and workmen shall be experienced and skillful in performing the work assigned to them.

H. Verify critical dimensions in the field before fabricating items, which must fit adjoining construction.

I. Where accessories are required in order to install parts of the work in usable form, provide such accessories.

J. Follow manufacturer's instructions for assembling, installing and adjusting products. Where manufacturer's instructions conflict with Contract Documents, request instructions from Architect.

K. Adjust and operate all items of equipment, leaving them fully ready for use.

L. All guarantees, warranties, and service maintenance agreements shall commence on the date of substantial completion of the work or the item being guaranteed, whichever is later, so that Owner receives full use of the item for the guarantee period.

M. All materials and equipment shall comply with the Occupational Safety and Health Act as amended.

1.4 GENERAL WORK TO BE PERFORMED AS PART OF GENERAL CONDITION

A. Seal cracks and openings so as to make exterior skin of building tight to the weather. If methods of doing so are not specified, notify Architect, and proceed as directed by the Architect.

B. Provide adequate blocking, bracing, nailers, and fastenings to install parts of the work securely. Installed parts shall be able to withstand 2-1/2 times the maximum anticipated load as estimated by Architect. Blocking, bracing, nailers, and fastenings shall not be subject to deterioration or weakening as the result of normal environmental conditions or aging.

C. Perform cutting and patching required for all trades. Use workmen skilled in such work. Patch holes where ducts, conduit, pipes, and other items pass through existing construction. Patch holes where ducts, conduit, pipes, and other items are removed from existing construction.

D. Check drawings for requirements for bases, pads, and other supporting structures. Provide such supporting structures.

E. As part of the one year warranty specified in the General Conditions, repair cracks and other faults which occur as a result of settlement and shrinkage during the first year after substantial completion. This does not include faults, which are due to abuse of the project, or abnormal faults which result from inadequate design.

1.5 REFERENCE STANDARDS

A. Unless date is listed, reference to standard specifications shall mean latest edition of such specifications published at date of bid documents.

B. Reference to technical society or organization is made in the Project Manual according to the abbreviations listed in Section 01090.

END OF SECTION

CAST-IN-PLACE CONCRETE

PART 1 - GENERAL

1.1 RELATED DOCUMENTS

A. Drawings and general provisions of the Contract, including General and Supplementary Conditions and Division 1 Specification Sections, apply to this Section.

1.2 SUMMARY

A. This Section specifies cast-in place concrete, including formwork, reinforcement, concrete materials, mix design, placement procedures, and finishes.

1.3 DEFINITIONS

A. Cementitious Materials: Portland cement alone or in combination with one or more of blended hydraulic cement, fly ash and other pozzolans, ground granulated blast-furnace slag, and silica fume.

1.4 SUBMITTALS

A. Product Data: For each type of manufactured material and product indicated.

B. Design Mixes: For each concrete mix. Include alternate mix designs when characteristics of materials, project conditions, weather, test results, or other circumstances warrant adjustments.

1. Indicate amounts of mix water to be withheld for later addition at Project site.

C. Steel Reinforcement Shop Drawings: Details of fabrication, bending, and placement, prepared according to ACI 315, "Details and Detailing of Concrete Reinforcement." Include material, grade, bar schedules, stirrup spacing, bent bar diagrams, arrangement, and supports of concrete reinforcement. Include special reinforcement required for openings through concrete structures.

D. Material Test Reports: From a qualified testing agency indicating and interpreting test results for compliance of the following with requirements indicated, based on comprehensive testing of current materials:

E. Material Certificates: Signed by manufacturers certifying that each of the following items complies with requirements:

1. Cementitious materials and aggregates.
2. Form materials and form-release agents.
3. Steel reinforcement and reinforcement accessories.
4. Admixtures.
5. Curing materials.

6. Floor and slab treatments.
7. Bonding agents.
8. Adhesives.
9. Vapor retarders.
10. Epoxy joint filler.
11. Joint-filler strips.
12. Repair materials.

1.5 QUALITY ASSURANCE

A. Installer Qualifications: An experienced installer who has completed concrete Work similar in material, design, and extent to that indicated for this Project and whose work has resulted in construction with a record of successful in-service performance.

B. Manufacturer Qualifications: A firm experienced in manufacturing ready-mixed concrete products complying with ASTM C 94 requirements for production facilities and equipment.

1. Manufacturer must be certified according to the National Ready Mixed Concrete Association's Certification of Ready Mixed Concrete Production Facilities.

C. Testing Agency Qualifications: An independent testing agency, acceptable to authorities having jurisdiction, qualified according to ASTM C 1077 and ASTM E 329 to conduct the testing indicated, as documented according to ASTM E 548.

1. Personnel conducting field tests shall be qualified as ACI Concrete Field Testing Technician, Grade 1, according to ACI CP-1 or an equivalent certification program.

D. Source Limitations: Obtain each type or class of cementitious material of the same brand from the same manufacturer's plant, each aggregate from one source, and each admixture from the same manufacturer.

E. ACI Publications: Comply with the following, unless more stringent provisions are indicated:

1. ACI 301, "Specification for Structural Concrete."
2. ACI 117, "Specifications for Tolerances for Concrete Construction and Materials."

1.6 DELIVERY, STORAGE, AND HANDLING

A. Deliver, store, and handle steel reinforcement to prevent bending and damage.

PART 2 - PRODUCTS

2.1 FORM-FACING MATERIALS

A. Smooth-Formed Finished Concrete: Form-facing panels that will provide continuous, true, and smooth concrete surfaces. Furnish in largest practicable sizes to minimize number of joints.

1. Plywood, metal, or other approved panel materials.
2. Exterior-grade plywood panels, suitable for concrete forms, complying with DOC PS 1, and as follows:

a. High-density overlay, Class 1, or better.
b. Medium-density overlay, Class 1, or better, mill-release agent treated and edge sealed.
c. Structural 1, B-B, or better, mill oiled and edge sealed.
d. B-B (Concrete Form), Class 1, or better, mill oiled and edge sealed.

B. Rough-Formed Finished Concrete: Plywood, lumber, metal, or another approved material. Provide lumber dressed on at least two edges and one side for tight fit.

C. Chamfer Strips: Wood, metal, PVC, or rubber strips, 3/4 by 3/4 inch , minimum.

D. Form-Release Agent: Commercially formulated form-release agent that will not bond with, stain, or adversely affect concrete surfaces and will not impair subsequent treatments of concrete surfaces.

1. Formulate form-release agent with rust inhibitor for steel form-facing materials.

E. Form Ties: Factory-fabricated, removable or snap-off metal or glass-fiber-reinforced plastic form ties designed to resist lateral pressure of fresh concrete on forms and to prevent spalling of concrete on removal.

1. Furnish units that will leave no corrodible metal closer than 1 inch to the plane of the exposed concrete surface.
2. Furnish ties that, when removed, will leave holes not larger than 1 inch in diameter in concrete surface.
3. Furnish ties with integral water-barrier plates to walls indicated to receive dampproofing or waterproofing.

2.2 STEEL REINFORCEMENT

A. Reinforcing Bars: ASTM A 615/A 615M, Grade 60, deformed.

B. Plain-Steel Welded Wire Fabric: ASTM A 185, fabricated from as-drawn steel wire into flat sheets.

2.3 REINFORCEMENT ACCESSORIES

A. Bar Supports: Bolsters, chairs, spacers, and other devices for spacing, supporting, and fastening reinforcing bars and welded wire fabric in place. Manufacture bar supports according to CRSI's "Manual of Standard Practice" from steel wire, plastic, or precast concrete or fiber-reinforced concrete of greater compressive strength than concrete, and as follows:

1. For concrete surfaces exposed to view where legs of wire bar supports contact forms, use CRSI Class 1 plastic-protected or CRSI Class 2 stainless-steel bar supports.

2.4 CONCRETE MATERIALS

A. Portland Cement: ASTM C 150, Type I.

B. Silica Fume: ASTM C 1240, amorphous silica.

C. Normal-Weight Aggregate: ASTM C 33, uniformly graded, and as follows:

1. Class: Moderate weathering region, but not less than 3M.
2. Nominal Maximum Aggregate Size: 3/4 inch .
3. Combined Aggregate Gradation: Well graded from coarsest to finest with not more than 18 percent and not less than 8 percent retained on an individual sieve, except that less than 8 percent may be retained on coarsest sieve and on No. 50 sieve, and less than 8 percent may be retained on sieves finer than No. 50.

D. Water: Potable and complying with ASTM C 94.

2.5 ADMIXTURES

A. General: Admixtures certified by manufacturer to contain not more than 0.1 percent water-soluble chloride ions by mass of cementitious material and to be compatible with other admixtures and cementitious materials. Do not use admixtures containing calcium chloride.

B. Air-Entraining Admixture: ASTM C 260.
   a. Acceptable Products and Manufacturers:
      1) Air-Mix or Perma-Air, Euclid Chemical Co.
      2) Darex AEA or Daravair, W.R. Grace & Co.
      3) MB-VR or Micro-Air, Master Builders, Inc.
      4) Sealtight AEA, W.R. Meadows, Inc.

C. Water-Reducing Admixture: ASTM C 494, Type A.
   a. Acceptable Products and Manufacturers:
      1) Eucon WR-75, Euclid Chemical Co.
      2) WRDA, W.R. Grace & Co.
      3) Pozzolith Normal or Polyheed, Master Builders, Inc.
      4) Metco W.R. Metalcrete Industries

D. Water-Reducing and Accelerating Admixture: ASTM C 494, Type E.

E. Water-Reducing and Retarding Admixture: ASTM C 494, Type D.

2.6 VAPOR RETARDERS

A. Vapor Retarder: ASTM E 1745, Class C, polyethylene sheet, ASTM D 4397, not less than 6 mils thick:

2.7 CURING MATERIALS

A. Evaporation Retarder: Waterborne, monomolecular film forming, manufactured for application to fresh concrete.

B. Absorptive Cover: AASHTO M 182, Class 2, burlap cloth made from jute or kenaf, weighing approximately 9 oz./sq. yd. dry.

C. Moisture-Retaining Cover: ASTM C 171, polyethylene film or white burlap-polyethylene sheet.

D. Water: Potable.

E. Clear, Waterborne, Membrane-Forming Curing and Sealing Compound: ASTM C 1315, Type 1, Class A.

F. Products: Subject to compliance with requirements, provide one of the following:

1. Clear, Waterborne, Membrane-Forming Curing Compound:
   a. Safe-Cure & Seal 20; ChemMasters.
   b. Cure & Seal 309 Emulsion; Kaufman Products Inc.
   c. Metcure; Metalcrete Industries.
   d. Cure & Seal 150E; Nox-Crete Products Group, Kinsman Corporation.
   e. Kure-N-Seal WB; Sonneborn, Div. of ChemRex, Inc.
   f. Florseal W.B.; Sternson Group.
   g. Cure & Seal 14 percent E; Symons Corporation.
   h. Seal Cure WB 150; Tamms Industries Co., Div. of LaPorte Construction Chemicals of North America, Inc.

2.8 RELATED MATERIALS

A. Joint-Filler Strips: ASTM D 1751, asphalt-saturated cellulosic fiber.

B. Epoxy Joint Filler: Two-component, semirigid, 100 percent solids, epoxy resin with a Shore A hardness of 80 per ASTM D 2240.

C. Bonding Agent: ASTM C 1059, Type II, non-redispersible, acrylic emulsion or styrene butadiene.

2.9 REPAIR MATERIALS

A. Patching Mortar: Comprised of same materials and approximately same proportions as used for surrounding concrete, except with coarse aggregate omitted.:

1. Consisting of not more than 1 part cement to 2-1/2 parts sand.
2. Substitute white Portland cement for portion of gray Portland cement to match color of surrounding exposed concrete.
3. Limit mixing water to no more than necessary for handling and placing. Maximum water/cement ratio of 0.50.

B. Bonding Grout: Mix consisting of Portland cement, part fine sand passing No. 30 mesh sieve, and 50:50 mixture of bonding admixture and water in proportions as recommended by bonding admixture manufacturer.

1. Minimum 1:1 cement to sand ratio.
2. Mix to achieve consistency of thick cream.

2.10 CONCRETE MIXES

A. Prepare design mixes for each type and strength of concrete determined by either laboratory trial mix or field test data bases, as follows:

1. Proportion normal-weight concrete according to ACI 211.1 and ACI 301.
2. Proportion lightweight structural concrete according to ACI 211.2 and ACI 301.

B. Use a qualified independent testing agency for preparing and reporting proposed mix designs for the laboratory trial mix basis.

C. Footings and Foundation Walls: Proportion normal-weight concrete mix as follows:
1. Compressive Strength (28 Days): 3000 psi .
2. Maximum Slump: 5 inches.

D. Slab-on-Grade: Proportion normal-weight concrete mix as follows:
1. Compressive Strength (28 Days): 3000 psi.
2. Minimum Cementitious Materials Content: 540 lb/cu. yd.
3. Maximum Slump: 5 inches.

E. Cementitious Materials: For concrete exposed to deicers, limit percentage, by weight, of cementitious materials other than portland cement according to ACI 301 requirements.

F. Maximum Water-Cementitious Materials Ratio: 0.50.

G. Maximum Water-Cementitious Materials Ratio: 0.45 for concrete exposed to deicers or subject to freezing and thawing while moist.

H. Air Content: Add air-entraining admixture at manufacturer's prescribed rate to result in concrete at point of placement having an air content as follows within a tolerance of plus 1 or minus 1.5 percent, unless otherwise indicated:
1. Air Content: 6 percent for 3/4-inch- nominal maximum aggregate size.

I. Do not air entrain concrete to trowel-finished interior floors and suspended slabs.

J. Limit water-soluble, chloride-ion content in hardened concrete to 0.15 percent by weight of cement.

K. Admixtures: Use admixtures according to manufacturer's written instructions.

1. Use water-reducing admixture in concrete, as required, for placement and workability.
2. Use water-reducing and retarding admixture when required by high temperatures, low humidity, or other adverse placement conditions.

2.11 FABRICATING REINFORCEMENT

A. Fabricate steel reinforcement according to CRSI's "Manual of Standard Practice."

2.12 CONCRETE MIXING

A. Ready-Mixed Concrete: Measure, batch, mix, and deliver concrete according to ASTM C 94, and furnish batch ticket information.

B. Ready-Mixed Concrete: Measure, batch, mix, and deliver concrete according to ASTM C 94 and ASTM C 1116, and furnish batch ticket information.

1. When air temperature is between 85 and 90 deg F, reduce mixing and delivery time from 1-1/2 hours to 75 minutes; when air temperature is above 90 deg F, reduce mixing and delivery time to 60 minutes.

PART 3 - EXECUTION

3.1 FORMWORK

A. Design, erect, shore, brace, and maintain formwork, according to ACI 301, to support vertical, lateral, static, and dynamic loads, and construction loads that might be applied, until concrete structure can support such loads.

B. Construct formwork so concrete members and structures are of size, shape, alignment, elevation, and position indicated, within tolerance limits of ACI 117.

C. Limit concrete surface irregularities, designated by ACI 347R as abrupt or gradual, as follows:

1. Class A, 1/8 inch .

D. Construct forms tight enough to prevent loss of concrete mortar.

E. Fabricate forms for easy removal without hammering or prying against concrete surfaces. Provide crush or wrecking plates where stripping may damage cast concrete surfaces. Provide top forms for inclined surfaces steeper than 1.5 horizontal to 1 vertical. Kerf wood inserts for forming keyways, reglets, recesses, and the like, for easy removal.

1. Do not use rust-stained steel form-facing material.

F. Set edge forms, bulkheads, and intermediate screed strips for slabs to achieve required elevations and slopes in finished concrete surfaces. Provide and secure units to support screed strips; use strike-off templates or compacting-type screeds.

G. Provide temporary openings for cleanouts and inspection ports where interior area of formwork is inaccessible. Close openings with panels tightly fitted to forms and securely braced to prevent loss of concrete mortar. Locate temporary openings in forms at inconspicuous locations.

H. Do not chamfer corners or edges of concrete.

I. Form openings, chases, offsets, sinkages, keyways, reglets, blocking, screeds, and bulkheads required in the Work. Determine sizes and locations from trades providing such items.

J. Clean forms and adjacent surfaces to receive concrete. Remove chips, wood, sawdust, dirt, and other debris just before placing concrete.

K. Retighten forms and bracing before placing concrete, as required, to prevent mortar leaks and maintain proper alignment.

L. Coat contact surfaces of forms with form-release agent, according to manufacturer's written instructions, before placing reinforcement.

3.2 EMBEDDED ITEMS

A. Place and secure anchorage devices and other embedded items required for adjoining work that is attached to or supported by cast-in-place concrete. Use Setting Drawings, templates, diagrams, instructions, and directions furnished with items to be embedded.

1. Install anchor bolts, accurately located, to elevations required.
2. Install reglets to receive top edge of foundation sheet waterproofing and to receive through-wall flashings in outer face of concrete frame at exterior walls, where flashing is shown at lintels, shelf angles, and other conditions.
3. Install dovetail anchor slots in concrete structures as indicated.

3.3 REMOVING AND REUSING FORMS

A. General: Formwork, for sides of beams, walls, columns, and similar parts of the Work, that does not support weight of concrete may be removed after cumulatively curing at not less than 50 deg F for 24 hours after placing concrete provided concrete is hard enough to not be damaged by form-removal operations and provided curing and protection operations are maintained.

B. Leave formwork, for beam soffits, joists, slabs, and other structural elements, that supports weight of concrete in place until concrete has achieved the following:
1. At least 70 percent of 28-day design compressive strength.
2. Determine compressive strength of in-place concrete by testing representative field- or laboratory-cured test specimens according to ACI 301.
3. Remove forms only if shores have been arranged to permit removal of forms without loosening or disturbing shores.

C. Clean and repair surfaces of forms to be reused in the Work. Split, frayed, delaminated, or otherwise damaged form-facing material will not be acceptable for exposed surfaces. Apply new form-release agent.

D. When forms are reused, clean surfaces, remove fins and laitance, and tighten to close joints. Align and secure joints to avoid offsets. Do not use patched forms for exposed concrete surfaces unless approved by Architect.

3.4 VAPOR RETARDERS

A. Vapor Retarder: Place, protect, and repair vapor-retarder sheets according to ASTM E 1643 and manufacturer's written instructions.

3.5 STEEL REINFORCEMENT

A. General: Comply with CRSI's "Manual of Standard Practice" for placing reinforcement.

1. Do not cut or puncture vapor retarder. Repair damage and reseal vapor retarder before placing concrete.

B. Clean reinforcement of loose rust and mill scale, earth, ice, and other foreign materials.

C. Accurately position, support, and secure reinforcement against displacement. Locate and support reinforcement with bar supports to maintain minimum concrete cover. Do not tack weld crossing reinforcing bars.

1. Shop- or field-weld reinforcement according to AWS D1.4, where indicated.

D. Set wire ties with ends directed into concrete, not toward exposed concrete surfaces.

E. Install welded wire fabric in longest practicable lengths on bar supports spaced to minimize sagging. Lap edges and ends of adjoining sheets at least one mesh spacing. Offset laps of adjoining sheet widths to prevent continuous laps in either direction. Lace overlaps with wire.

3.6 JOINTS

A. General: Construct joints true to line with faces perpendicular to surface plane of concrete.

B. Contraction Joints in Slabs-on-Grade: Form weakened-plane contraction joints, sectioning concrete into areas as indicated. Construct contraction joints for a depth equal to at least one-fourth of concrete thickness, as follows:

1. Grooved Joints: Form contraction joints after initial floating by grooving and finishing each edge of joint to a radius of 1/8 inch. Repeat grooving of contraction joints after applying surface finishes. Eliminate groover tool marks on concrete surfaces.
2. Sawed Joints: Form contraction joints with power saws equipped with shatterproof abrasive or diamond-rimmed blades. Cut 1/8-inch- wide joints into concrete when cutting action will not tear, abrade, or otherwise damage surface and before concrete develops random contraction cracks.

3.7 CONCRETE PLACEMENT

A. Before placing concrete, verify that installation of formwork, reinforcement, and embedded items is complete and that required inspections have been performed.

B. Do not add water to concrete during delivery, at Project site, or during placement, unless approved by Architect.

C. Deposit concrete continuously or in layers of such thickness that no new concrete will be placed on concrete that has hardened enough to cause seams or planes of weakness. If a section cannot be placed continuously, provide construction joints as specified. Deposit concrete to avoid segregation.

D. Deposit concrete in forms in horizontal layers no deeper than 24 inches and in a manner to avoid inclined construction joints. Place each layer while preceding layer is still plastic, to avoid cold joints.

1. Consolidate placed concrete with mechanical vibrating equipment. Use equipment and procedures for consolidating concrete recommended by ACI 309R.
2. Do not use vibrators to transport concrete inside forms. Insert and withdraw vibrators vertically at uniformly spaced locations no farther than the visible effectiveness of the vibrator. Place vibrators to rapidly penetrate placed layer and at least 6 inches into

preceding layer. Do not insert vibrators into lower layers of concrete that have begun to lose plasticity. At each insertion, limit duration of vibration to time necessary to consolidate concrete and complete embedment of reinforcement and other embedded items without causing mix constituents to segregate.

E. Deposit and consolidate concrete for floors and slabs in a continuous operation, within limits of construction joints, until placement of a panel or section is complete.

1. Consolidate concrete during placement operations so concrete is thoroughly worked around reinforcement and other embedded items and into corners.
2. Maintain reinforcement in position on chairs during concrete placement.
3. Screed slab surfaces with a straightedge and strike off to correct elevations.
4. Slope surfaces uniformly to drains where required.
5. Begin initial floating using bull floats or darbies to form a uniform and open-textured surface plane, free of humps or hollows, before excess moisture or bleedwater appears on the surface. Do not further disturb slab surfaces before starting finishing operations.

F. Cold-Weather Placement: Comply with ACI 306.1 and as follows. Protect concrete work from physical damage or reduced strength that could be caused by frost, freezing actions, or low temperatures.

1. When air temperature has fallen to or is expected to fall below 40 deg F, uniformly heat water and aggregates before mixing to obtain a concrete mixture temperature of not less than 50 deg F and not more than 80 deg F at point of placement.
2. Do not use frozen materials or materials containing ice or snow. Do not place concrete on frozen subgrade or on subgrade containing frozen materials.
3. Do not use calcium chloride, salt, or other materials containing antifreeze agents or chemical accelerators, unless otherwise specified and approved in mix designs.

G. Hot-Weather Placement: Place concrete according to recommendations in ACI 305R and as follows, when hot-weather conditions exist:

1. Cool ingredients before mixing to maintain concrete temperature below 90 deg F at time of placement. Chilled mixing water or chopped ice may be used to control temperature, provided water equivalent of ice is calculated to total amount of mixing water. Using liquid nitrogen to cool concrete is Contractor's option.
2. Cover steel reinforcement with water-soaked burlap so steel temperature will not exceed ambient air temperature immediately before embedding in concrete.
3. Fog-spray forms, steel reinforcement, and subgrade just before placing concrete. Keep subgrade moisture uniform without standing water, soft spots, or dry areas.

3.8 FINISHING FORMED SURFACES

A. Rough-Formed Finish: As-cast concrete texture imparted by form-facing material with tie holes and defective areas repaired and patched. Remove fins and other projections exceeding ACI 347R limits for class of surface specified.

B. Smooth-Formed Finish: As-cast concrete texture imparted by form-facing material, arranged in an orderly and symmetrical manner with a minimum of seams. Repair and patch tie holes and defective areas. Remove fins and other projections exceeding 1/8 inch in height.

1. Apply to concrete surfaces exposed to public view or to be covered with a coating or covering material applied directly to concrete, such as waterproofing, dampproofing, veneer plaster, or painting.

2. Do not apply rubbed finish to smooth-formed finish.

C. Rubbed Finish: Apply the following to smooth-formed finished concrete:

1. Grout-Cleaned Finish: Wet concrete surfaces and apply grout of a consistency of thick paint to coat surfaces and fill small holes. Mix one part portland cement to one and one-half parts fine sand with a 1:1 mixture of bonding admixture and water. Add white portland cement in amounts determined by trial patches so color of dry grout will match adjacent surfaces. Scrub grout into voids and remove excess grout. When grout whitens, rub surface with clean burlap and keep surface damp by fog spray for at least 36 hours.

D. Related Unformed Surfaces: At tops of walls, horizontal offsets, and similar unformed surfaces adjacent to formed surfaces, strike off smooth and finish with a texture matching adjacent formed surfaces. Continue final surface treatment of formed surfaces uniformly across adjacent unformed surfaces, unless otherwise indicated.

3.9 FINISHING FLOORS AND SLABS

A. General: Comply with recommendations in ACI 302.1R for screeding, restraightening, and finishing operations for concrete surfaces. Do not wet concrete surfaces.

B. Scratch Finish: While still plastic, texture concrete surface that has been screeded and bull-floated or darbied. Use stiff brushes, brooms, or rakes.

1. Apply scratch finish to surfaces indicated and to surfaces to receive concrete floor topping or mortar setting beds for ceramic or quarry tile, portland cement terrazzo, and other bonded cementitious floor finishes.

C. Float Finish: Consolidate surface with power-driven floats or by hand floating if area is small or inaccessible to power driven floats. Restraighten, cut down high spots, and fill low spots. Repeat float passes and restraightening until surface is left with a uniform, smooth, granular texture.

1. Apply float finish to surfaces indicated, to surfaces to receive trowel finish, and to floor and slab surfaces to be covered with fluid-applied or sheet waterproofing, built-up or membrane roofing, or sand-bed terrazzo.

D. Trowel Finish: After applying float finish, apply first trowel finish and consolidate concrete by hand or power-driven trowel. Continue troweling passes and restraighten until surface is free of trowel marks and uniform in texture and appearance. Grind smooth any surface defects that would telegraph through applied coatings or floor coverings.

1. Apply a trowel finish to surfaces indicated and to floor and slab surfaces exposed to view or to be covered with resilient flooring, carpet, ceramic or quarry tile set over a cleavage membrane, paint, or another thin film-finish coating system
2. Finish surfaces to the following tolerances, measured within 24 hours according to ASTM E 1155/E 1155M for a randomly trafficked floor surface:
   a. Specified overall values of flatness, F(F) 35; and levelness, F(L) 25; with minimum local values of flatness, F(F) 24; and levelness, F(L) 17; for slabs-on-grade.

E. Broom Finish: Apply a broom finish to exterior concrete platforms, steps, and ramps, and elsewhere as indicated.

1. Immediately after float finishing, slightly roughen trafficked surface by brooming with fiber-bristle broom perpendicular to main traffic route. Coordinate required final finish with Architect before application.

3.10 MISCELLANEOUS CONCRETE ITEMS

A. Filling In: Fill in holes and openings left in concrete structures, unless otherwise indicated, after work of other trades is in place. Mix, place, and cure concrete, as specified, to blend with in-place construction. Provide other miscellaneous concrete filling indicated or required to complete Work.

3.11 CONCRETE PROTECTION AND CURING

A. General: Protect freshly placed concrete from premature drying and excessive cold or hot temperatures. Comply with ACI 306.1 for cold-weather protection and with recommendations in ACI 305R for hot-weather protection during curing.

B. Evaporation Retarder: Apply evaporation retarder to unformed concrete surfaces if hot, dry, or windy conditions cause moisture loss approaching 0.2 lb/sq. ft. x h before and during finishing operations. Apply according to manufacturer's written instructions after placing, screeding, and bull floating or darbying concrete, but before float finishing.

C. Formed Surfaces: Cure formed concrete surfaces, including underside of beams, supported slabs, and other similar surfaces. If forms remain during curing period, moist cure after loosening forms. If removing forms before end of curing period, continue curing by one or a combination of the following methods listed in the following section.

D. Unformed Surfaces: Begin curing immediately after finishing concrete. Cure unformed surfaces, including floors and slabs, concrete floor toppings, and other surfaces, by one or a combination of the following methods:

1. Moisture Curing: Keep surfaces continuously moist for not less than seven days with the following materials:

   a. Water.
   b. Continuous water-fog spray.
   c. Absorptive cover, water saturated, and kept continuously wet. Cover concrete surfaces and edges with 12-inch lap over adjacent absorptive covers.

2. Moisture-Retaining-Cover Curing: Cover concrete surfaces with moisture-retaining cover for curing concrete, placed in widest practicable width, with sides and ends lapped at least 12 inches, and sealed by waterproof tape or adhesive. Cure for not less than seven days. Immediately repair any holes or tears during curing period using cover material and waterproof tape.

   a. Moisture cure or use moisture-retaining covers to cure concrete surfaces to receive floor coverings.
   b. Moisture cure or use moisture-retaining covers to cure concrete surfaces to receive penetrating liquid floor treatments.
   c. Cure concrete surfaces to receive floor coverings with either a moisture-retaining cover or a curing compound that the manufacturer recommends for use with floor coverings.

3. Curing Compound: Apply uniformly in continuous operation by power spray or roller according to manufacturer's written instructions. Recoat areas subjected to heavy rainfall within three hours after initial application. Maintain continuity of coating and repair damage during curing period.
4. Curing and Sealing Compound: Apply uniformly to floors and slabs indicated in a continuous operation by power spray or roller according to manufacturer's written instructions. Recoat areas subjected to heavy rainfall within three hours after initial application. Repeat process 24 hours later and apply a second coat. Maintain continuity of coating and repair damage during curing period.

3.12 FIELD QUALITY CONTROL

A. Testing Agency: Owner will engage a qualified independent testing and inspecting agency to sample materials, perform tests, and submit test reports during concrete placement. Sampling and testing for quality control may include those specified in this Article.

B. Testing Services: Testing of composite samples of fresh concrete obtained according to ASTM C 172 shall be performed according to the following requirements:

1. Testing Frequency: Obtain one composite sample for each day's pour of each concrete mix exceeding 5 cu. yd., but less than 25 cu. yd., plus one set for each additional 50 cu. yd. or fraction thereof.
2. Testing Frequency: Obtain at least one composite sample for each 100 cu. yd. or fraction thereof of each concrete mix placed each day.

    a. When frequency of testing will provide fewer than five compressive-strength tests for each concrete mix, testing shall be conducted from at least five randomly selected batches or from each batch if fewer than five are used.

3. Slump: ASTM C 143; one test at point of placement for each composite sample, but not less than one test for each day's pour of each concrete mix. Perform additional tests when concrete consistency appears to change.
4. Air Content: ASTM C 231, pressure method, for normal-weight concrete; ASTM C 173, volumetric method, for structural lightweight concrete; one test for each composite sample, but not less than one test for each day's pour of each concrete mix.
5. Concrete Temperature: ASTM C 1064; one test hourly when air temperature is 40 deg F and below and when 80 deg F and above, and one test for each composite sample.
6. Unit Weight: ASTM C 567, fresh unit weight of structural lightweight concrete; one test for each composite sample, but not less than one test for each day's pour of each concrete mix.
7. Compression Test Specimens: ASTM C 31/C 31M; cast and laboratory cure one set of four standard cylinder specimens for each composite sample.

    a. Cast and field cure one set of four standard cylinder specimens for each composite sample.

8. Compressive-Strength Tests: ASTM C 39; test two laboratory-cured specimens at 7 days and two at 28 days.

    a. Test two field-cured specimens at 7 days and two at 28 days.
    b. A compressive-strength test shall be the average compressive strength from two specimens obtained from same composite sample and tested at age indicated.

C. When strength of field-cured cylinders is less than 85 percent of companion laboratory-cured cylinders, Contractor shall evaluate operations and provide corrective procedures for protecting and curing in-place concrete.

D. Strength of each concrete mix will be satisfactory if every average of any three consecutive compressive-strength tests equals or exceeds specified compressive strength and no compressive-strength test value falls below specified compressive strength by more than 100 psi.

E. Test results shall be reported in writing to Architect, concrete manufacturer, and Contractor within 48 hours of testing. Reports of compressive-strength tests shall contain Project identification name and number, date of concrete placement, name of concrete testing and inspecting agency, location of concrete batch in Work, design compressive strength at 28 days, concrete mix proportions and materials, compressive breaking strength, and type of break for both 7-and 28-day tests.

F. Nondestructive Testing: Impact hammer, sonoscope, or other nondestructive device may be permitted by Architect but will not be used as sole basis for approval or rejection of concrete.

G. Additional Tests: Testing and inspecting agency shall make additional tests of concrete when test results indicate that slump, air entrainment, compressive strengths, or other requirements have not been met, as directed by Architect. Testing and inspecting agency may conduct tests to determine adequacy of concrete by cored cylinders complying with ASTM C 42 or by other methods as directed by Architect.

END OF SECTION

INSTALLATION GUIDE

March 1, 2012

The Wagner Companies
PO Box 423
Butle, WI 53007-0423

1-888-243-6914
Fax 414-214-0450

e-mail: TechCSR@mailwagner.com
www.wagnercompanies.com

TABLE OF CONTENTS

	Page
Before You Get Started	
Rail Finish	IG-1
Materials Required	IG-1
Tools Required	IG-1–IG-2
Installing Grommets	IG-2
Measuring and Installing Cable—Horizontal Railings	
Measuring Cable Lengths	IG-3
Installing Cable	IG-4–IG-14
Tensioning Cables	IG-14
Wood Railings—Mounting Alternatives/Hole Drilling	IG-15–IG-17
Measuring and Installing Cable—Vertical Railings	IG-18–IG-20
Swaging Instructions	IG-20–IG-23
Ultra-tec ® "Clip-On" Fixed Jaw Installation Instructions	IG-23
Using Invisiware ® Receivers on Stairways	IG-24–IG-25
Ultra-tec ® "Clip-On" Stop Installation Instructions	IG-26
Push-Lock™ Fittings Installation Instructions	IG-27–IG-29
Pull-Lock™ Stop-End Fittings Installation Instructions	IG-30–IG-31
Receiver with Push-Lock™ Stud Installation Instructions	IG-32–IG-37
PL-Key Instructions	IG-38

Ultra-tec®, Invisiware®, Adjust-A-Body®, and Adjust-A-Jaw®
are registered trademarks and Push-Lock™ and Pull-Lock™ are trademarks of
The Cable Connection, Carson City, NV 89706.
© 2012 The Cable Connection, Carson City, NV 89706. All rights reserved.

The Wagner Companies
www.wagnercompanies.com
info@mailwagner.com
1-888-243-6914

BEFORE YOU GET STARTED

Rail Finish

If your rail is to be painted, powder coated or otherwise finished in any way, we strongly recommend that you apply the finish after all holes are drilled and prior to stringing the cable.

Materials Required

Some parts require screws to mount them to your railing. If they were not ordered from the factory, then you will need to obtain mounting screws for the parts shown in the chart below.

PART NUMBERS	FOR CABLE DIAMETER	SCREW REQUIRED	FACTORY PART NO.*
Adjust-A-Ja w® Tensioner s			
A-J52	1/8" or 3/16"	1/4-28 x 1/2"	SC-6
A-J82 A-J122	1/4", 5/16", 3/8"	3/8-24 x 3/4"	SC-8
Adjust-A-Bod y® with Threaded Eye Tensioner s			
A-JTE5	1/8" or 3/16"	1/4-28 x 1/2"	SC-6
A-JTE8	1/4"	3/8-24 x 3/4"	SC-8
Push-Loc k™ with Threaded Eye Fittings			
PL-TE4	1/8"	1/4-28 x 1/2"	SC-6
PL-TE5	3/16"		

*Factory supplied screws are stainless steel button-head screws.

In areas prone to tampering, a permanent setting thread sealant is recommended for use with screws.

Tools Required

The tools listed here assume you will be swaging at least one end of the cable in the field using an Invisiware ® field swager. If no field swaging is required, only those tools indicated with * may be required.

*Cable Cutters. C9 for cables up to 3/16"; C12 for cables larger than 3/16".

Air Compressor.
Minimum 5.8 c.f.m. at 90 p.s.i. and a minimum 20 gallon tank. Air pressure should be regulated to a minimum of 120 p.s.i., not to exceed 140 p.s.i.

Ultra-tec ® Portable Pneumatic/Hydraulic Swager. (If you are renting one from the factory or a factory representative, be sure to specify the uncoated diameter of the cable you are swaging, so the correct swager will be supplied. Rented swagers generally come with most other special tools required to field

^ Model 610 Swager kit for 1/8" and 3/16" cable.

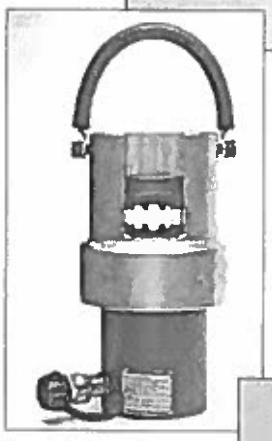

< Model 650 Swager for 1/8" through 3/8" cable.

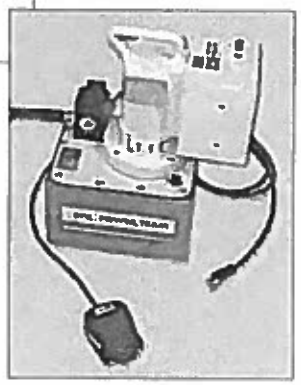

> Electric Hydraulic 120V Pump

IG-1
3/1/12

The Wagner Companies
www.wagnercompanies.com
info@mailwagner.com
1-888-243-6914

Tools Required (continued)

swage and install cable, including hose fittings, cable grip locking pliers, cable cutter, and GO gauge for measuring the swaged diameter of Invisiware ˚ Radius Ferrules. A pre-tensioner can also be furnished upon request.)

*Ultra-tec ˚ Pre-tensioning Tool (optional).
Since some Invisiware ˚ hardware has a minimum of take-up on longer runs (over 30 feet) you may want to use a pre-tensioning tool. In ordering, be sure to specify the cable diameter you will be using it with.

*Cable Grip Locking Pliers. To grip the cable while tensioning the end fittings without damaging the cable. (Available from the factory).

*Wrenches. If installing Invisiware ˚ Receivers (including when they are used with Push-Lock™ Studs), an Allen wrench to tension the cable. See chart below.

PA RT NUMBERS	FOR CABLE DIAMETER	HEX HOLE SIZE
R-6-12 thru R-6-62	1/8" or 3/16	3/16"
R-8-22 thru R-8-52	1/4"	7/32"
R-12-32 thru R-12-52	5/16"or 3/8"	5/16"

If installing Adjust-A-Jaw ˚, Adjust-A-Body ˚, or Push-Lock™ Stud tensioners, an open-end wrench to tension the cables. See chart below.

PART NUMBERS	FOR CABLE DIAMETER	OPEN-END WRENCH SIZE
Adjust-A-Jaw ˚ Tensioners		
A-J62	1/8" or 3/16"	7/16"
A-J82 A-J122	1/4", 5/16", 3/8"	11/16"
Adjust-A-Body ˚ Tensioners		
ANY	1/8" or 3/16"	7/16"
ANY	1/4"	9/16"
Push-Lock ˚ Stud Tensioners		
PLST -4	1/8"	3/8"

If installing Adjust-A-Body ˚ with Hanger Bolt Tensioners, an open-end wrench or hanger bolt driver installation tool to install the hanger bolts into the wood post.

PA RT NUMBERS	FOR CABLE DIAMETER	OPEN-END WRENCH SIZE
A-JB6	1/8" or 3/16"	1/4"
A-JB8	1/4"	3/8"

Calipers, if you are swaging and installing Invisiware ˚ Radius Ferrules, you will need a means to measure the diameter of the swaged fitting. ("GO" gauges for this purpose are normally included with Ultra-tec ˚ Portable Swagers when rented from the factory).

Grommet Installation Tool (available from the factory), and hammer if you will be installing grommets.

*Drills and Drill Bits as required, if installing in a wood railing—see Wood Railings under "Measuring and Installing Cable—Horizontal Railings".

*Cut-off Kit, if using Pull-Lock™ fittings.

INSTALLING GROMMETS

IMPORTANT NOTE: If grommets are being used on intermediate posts, cable braces, or in the cable exit hole of end posts, then grommets should be installed before cable is run.

To install grommets, see Fig. K below. Place the larger diameter of the grommet onto the grommet installation tool and the smaller diameter at the hole in the post. Tap the tool lightly with a hammer.

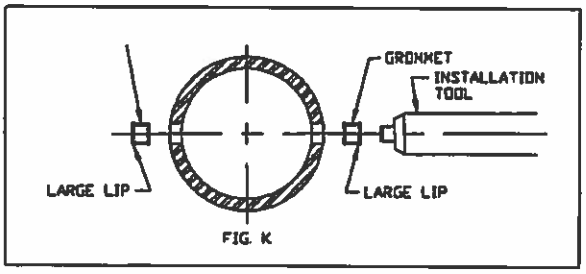

FIG. K

The Wagner Companies
www.wagnercompanies.com
info@mailwagner.com
1-888-243-6914

MEASURING AND INSTALLING CABLE

Horizontal Railings

Measuring Cable Lengths

This section applies only if you will be cutting and swaging the cables. If you have ordered your cables cut to length with fittings already swaged on, or you are using swageless fittings (Pull-Lock™, Push-Lock™, Push-Lock™ Stud), you can skip this section on "Measuring Cable Lengths."

Measure the length of the run from the outside of one terminating end post to the other terminating end post. Over estimate when corners are involved. See Figures A and B below.

Note that Post A is always the first end to which hardware is attached. When only one end has a tensioning device (Invisiware ® Receiver, Adjust-A-Jaw ® or Adjust-A-Body ® tensioner) that tensioning device is attached to Post B and the non-tensioning device is attached to Post A. Post B is always a tensioning end.

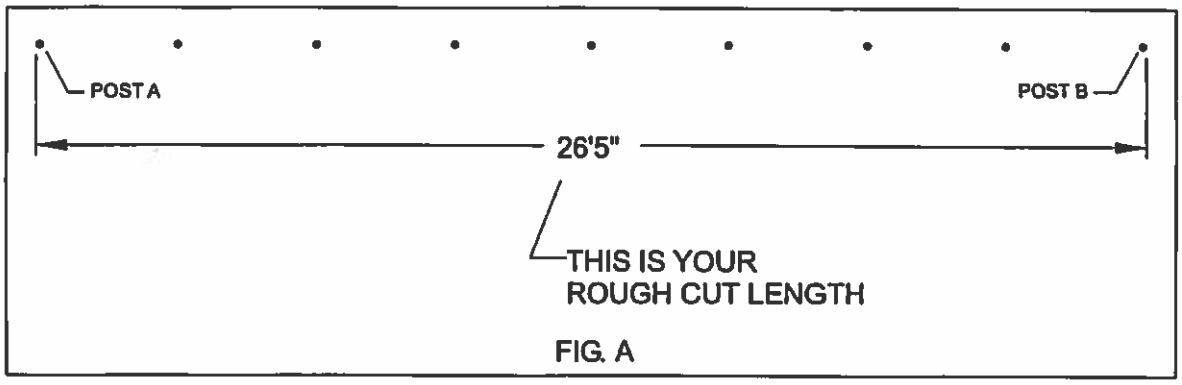

FIG. A

Measure out cable on a relatively clean surface (see Figure B below). A lawn or swept concrete surface would be fine. Cut cable to length using Cable Cutter.

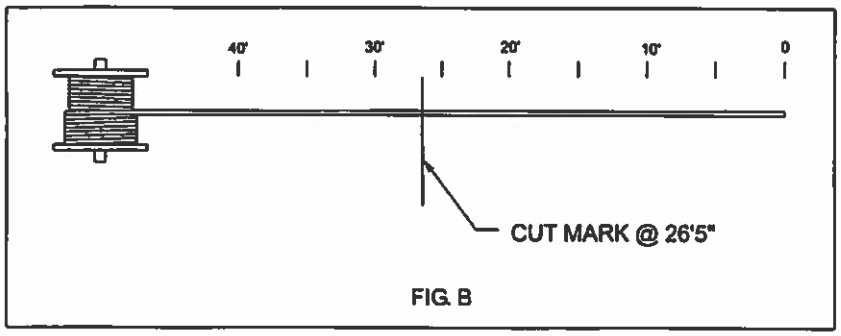

FIG. B

Note: Make sure you have a positive holding device at the zero end. Cutting the cables takes very little time. It is best to have one person stand at the zero end while another operates the cable cutter at the cut mark.

IG-3
3/1/12

The Wagner Companies
www.wagnercompanies.com
info@mailwagner.com
1-888-243-6914

Installing Cable (continued)

IF YOU ARE USING PUSH-LOCK™ OR PULL-LOCK™ FITTINGS, OR PUSH-LOCK™ STUD TENSIONERS, SEE SEPARATE INSTRUCTIONS FOR THOSE FITTINGS (pages IG-28 through IG-38).

NOTE: Where only one end of the cable has an adjusting fitting (Invisiware ® Receiver or Adjust-A-Jaw ® or Adjust-A-Body® tensioner), we recommend that you swage the unadjusting end, Post A, first (before the cables are strung) and the adjusting end, Post B, last (after the cables have been strung).

A. Unless already swaged (attached to the cables), swage the fittings to be used onto one end of the cut cables (see "Swaging Instructions," pages IG-20 to IG-23).

Where Invisiware ® Radius Ferrules will be used, 1) Slide the washer onto the cable; 2) swage the Radius Ferrule onto the end of the cable (see "Swaging Instructions," pages IG-20 to IG-23); 3) slide the washer over the body of the Radius Ferrule; 4) feed the bare end of the cable through the hole in Post A from the back side, until the fitting's head with washer rests against the back side of the post (or in the counterbore if applicable).

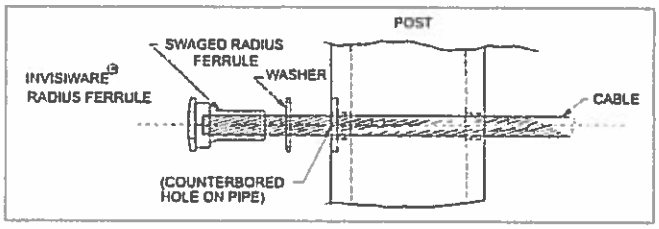

Where Invisiware ® Receivers are being used, swage the Stud onto the end of the cable to be attached to Post A (see "Swaging Instructions," pages IG-20 to IG-23)

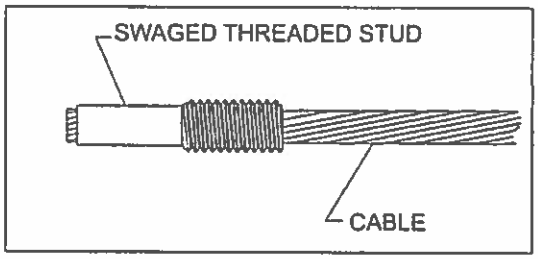

Where Adjust-A-Jaw ® or Adjust-A-Body ® Type Tensioners are being used, slide the Body onto the cable and swage the Ferrule onto the end of the cable to be attached to Post A (see "Swaging Instructions," pages IG-20 to IG-23).

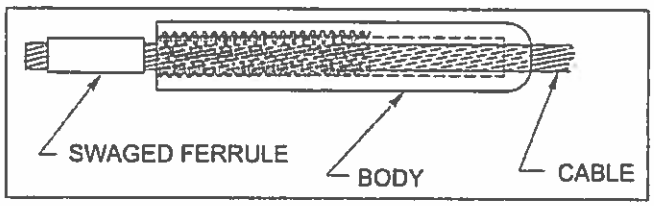

The Wagner Companies
www.wagnercompanies.com
info@mailwagner.com
1-888-243-6914

Installing Cable (continued)

Where Ultra-tec * Fixed Jaws are being used, slide the Fixed Jaw onto the cable and swage the Ferrule onto the end of the cable to be attached to Post A (see "Swaging Instructions," pages IG-21 to IG-24).

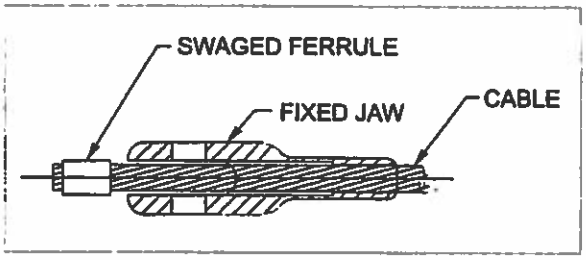

NOTE: If you are using Ultra-tec * "Clip-on" Fixed Jaws with the Ferrule already swaged onto the cable or Ultra-tec * "Clip-on" Stops you will have to feed the cable from the Post B end through all intermediate posts to Post A, before installing the Fixed Jaw onto the Post A end of the cable. See "Ultra-tec * Clip-On Fixed Jaw Installation Instructions" (page IG-23) or "Ultra-tec * "Clip-on Stop Installation Instructions" (page IG-26) for attaching the Fixed Jaw or "Clip-on Stop" to the cable.

B. String cable through intermediate posts and braces to Post B.

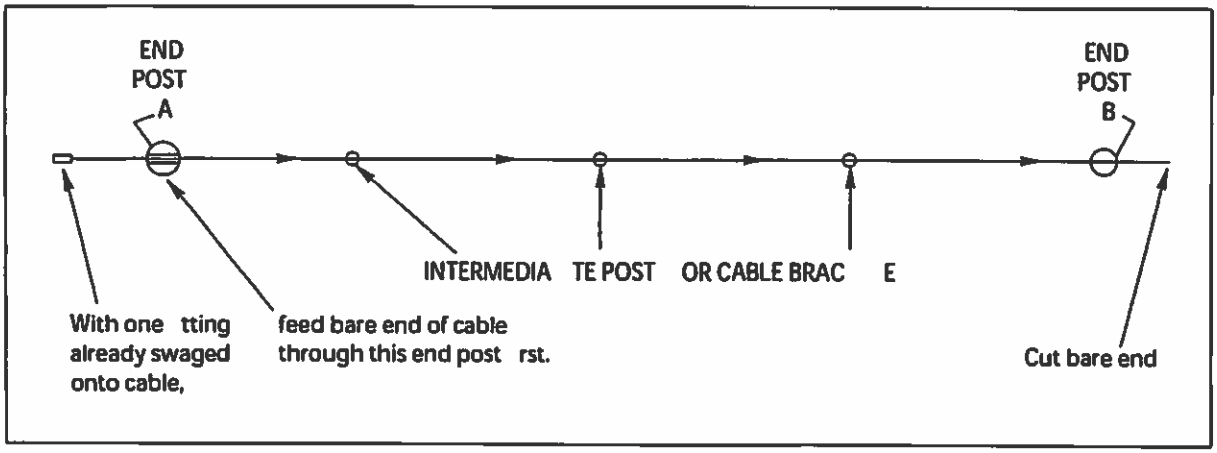

The Wagner Companies
www.wagnercompanies.com
info@mailwagner.com
1-888-243-6914

Installing Cable (Continued)

C. Attach fittings to end Post A.

If using Ultra-tec ˚ Fixed Jaw bolt the fitting to the tab, through the hole in the structural tee, or the lag eye (in wood post) on the end post, using the screws specified under "Materials Required."

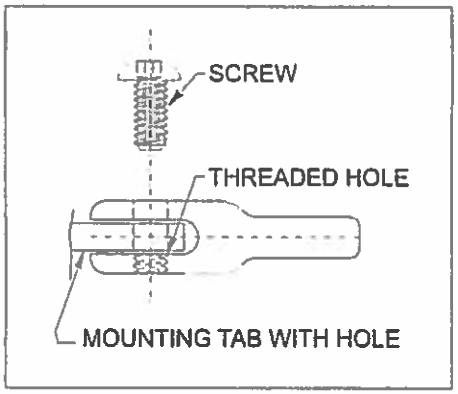

If using Adjust-A-Jaw ˚ or Adjust-A-Body ˚ with Threaded Eye Tensioners:

If you are installing the tensioner using tabs, holes in a structural tee or lag eyes (in wood) attach the clevis portion of the fitting to the tab, lag eye or through the hole in structural tee on the end post, using the screws specified under "Materials Required."

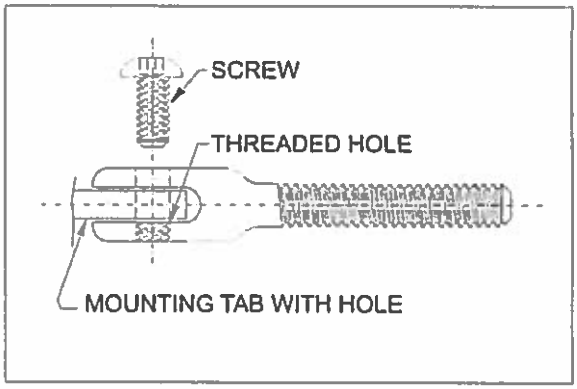

Screw the lock nut onto the threads of the Clevis or Eye, then hold the cable closely behind the body and turn the body by hand at least 6 full turns onto the threaded end of the Clevis. (See note on page IG-7).

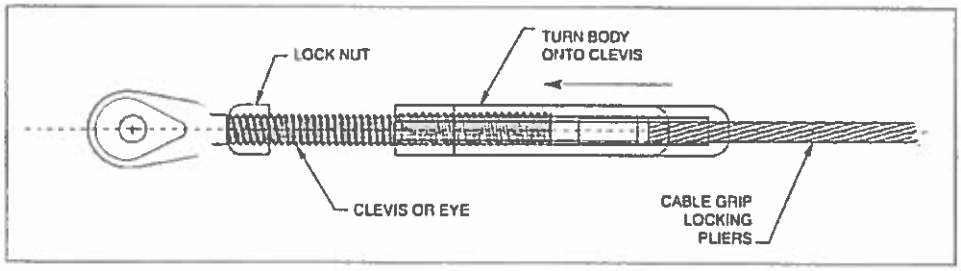

The Wagner Companies
www.wagnercompanies.com
info@mailwagner.com
1-888-243-6914

Installing Cable (Continued)

If you are installing into wood with a hanger bolt, screw the hanger bolt into a pre-drilled pilot hole in the post. Screw the lock nut onto the threads of the bolt, then hold the cable closely behind the body and turn the body by hand at least 6 full turns onto the threaded end of the bolt. (See note below)*

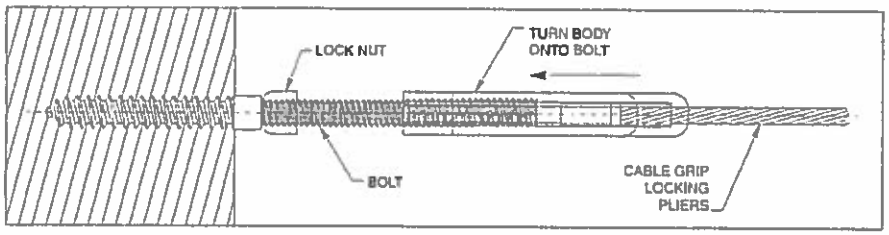

If you are installing into a threaded hole in a metal post, screw the bolt into the threaded hole in the post. Screw the lock nut onto the threads of the bolt, then hold the cable closely behind the body and turn the body by hand at least 6 full turns onto the threaded end of the bolt. (See note below)*

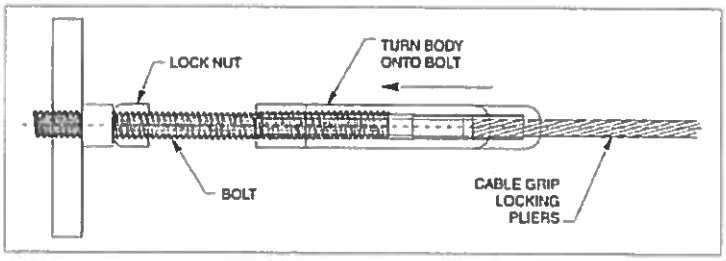

If you are installing an Adjust-A-Body ˚ concrete anchor bolt end into a concrete anchor bolt, screw the bolt into the threaded hole in the anchor bolt. Screw the lock nut onto the threads of the bolt, then hold the cable closely behind the body and turn the body by hand onto the threaded end of the bolt at least 6 full turns. (See note below)*

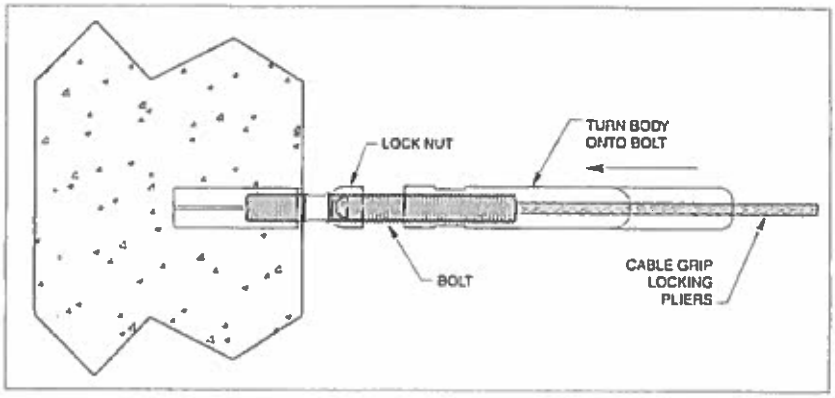

*NOTE: This will allow for maximum take-up. The fewer turns you make at this step, the more thread that will be exposed when the installation is complete. Each job is different, so we suggest that you string and lightly tension one cable between end posts, to determine how many turns you will make in turning the body onto the male threaded end in order to minimize the amount of exposed thread at both ends.

The Wagner Companies
www.wagnercompanies.com
info@mailwagner.com
1-888-243-6914

Installing Cable (Continued)

If using Invisiware ® Receiver, slide the washer over the body of the Receiver, then feed the Receiver through the hole in back of the post and into the hole on inside wall of the post (metal). If you have a metal double post end post construction, be sure to place spacers between the double posts, as you feed the fitting through. By hand, screw the Receiver onto the threaded Stud at least 6 full turns.

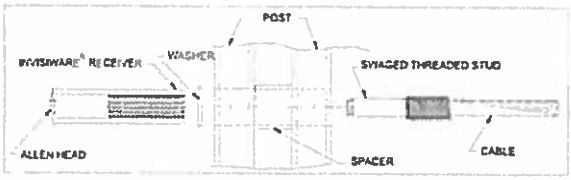

DOUBLE END POST CONSTRUCTION

For wood posts, follow the same instructions, except you will have to feed the cable (with the Stud swaged on the end) through the post from the inside to meet the Receiver inside the post, where you will turn the Receiver onto the Stud using an Allen wrench.

If you are using Invisiware ® Radius Ferrule, make sure the fitting is through the hole in the back of the post with the head with washer resting against the back side of the post (or in the counterbore if applicable) as you proceed to the next step.

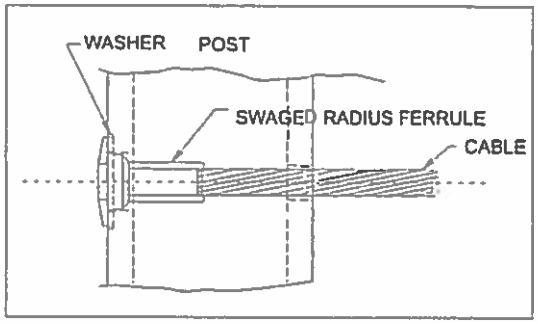

D. Pull cable toward end Post B. Use Ultra-tec ® Pre-tensioning Tool, if required (see below).

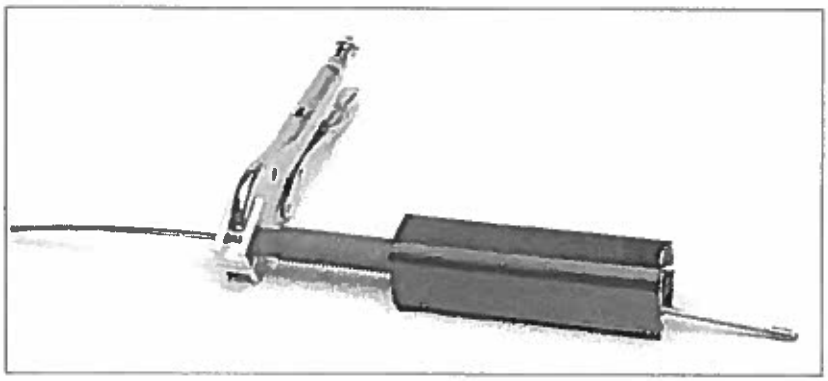

The Wagner Companies
www.wagnercompanies.com
info@mailwagner.com
1-888-243-6914

SECTION 05720 -- HANDRAILS AND RAILINGS WITH HORIZONTAL CABLE RAILING COMPONENTS
NOTE: THE TOP RAIL WITH LED LIGHTING IS SPECIFIED BELOW AND WITHIN THE SPECIFICATIONS AND DRAWINGS. THE OPTION OF THE STAILESS STEEL CABLING IS AN OPTION BETWEEN "FAIRWAY" AND "WAGNER".

PART 1 -- GENERAL
Section 1.01 WORK INCLUDED
A. Furnish and install stainless steel railings and horizontal cable railing components.

Section 1.02 WORK FURNISHED BUT INSTALLED UNDER OTHER SECTIONS
A. Furnish anchors for placement in raised deck framing

Section 1.03 RELATED WORK
A. Section 06100 - Rough Carpentry:
B. Section 09900 - Painting: Paint Finish

Section 1.04 REFERENCES
Include only reference standards that are to be indicated within the text of this section. Edit the following, adding and deleting as required for project and product selection.
A. Aluminum Association (AA)
1. ABH-21 Aluminum Brazing Handbook
2. ASD-1 Aluminum Standards and Data
3. DAF-45 Designation System for Aluminum Finishes
4. SAA-46 Standards for Anodized Architectural Aluminum
B. American Architectural Manufacturers Association (AAMA)
1. AAMA 605.1 Specification for High Performance Organic Coatings on Architectural Extrusions and Panels.
2. AAMA 606.1 Voluntary Guide Specifications and Inspection Methods of Integral Color Anodic Finishes for Architectural Aluminum.
3. AAMA 607.1 Voluntary Guide Specifications and Inspection Methods for Clear Anodic Finishes for Architectural Aluminum.
4. AAMA 608.1 Voluntary Guide Specifications and Inspection Methods for Electrolytically Deposited Color Anodic Finishes for Architectural Aluminum.
C. American Concrete Institute (ACI)
1. ACI 347-78 Recommended Practice for Concrete Formwork
D. American Iron and Steel Institute (AISI)
1. Steel Products Manual; Stainless and Heat Resisting Steel.
E. American National Standards Institute (ANSI)
1. A21.1 Safety Requirements for Floor and Wall Openings, Railings and Toe Boards.
2. A58.1 Minimum Design Loads in Buildings and Other Structures.
3. A117.1 Accessible and Usable Buildings and Facilities. .
F. American Society for Testing and Materials (ASTM)
1. A 269 Specification for Seamless and Welded Austenitic Stainless Steel Tubing for General Service.
2. A 276 Specification for Stainless and Heat-Resisting Steel Bars and Shapes.
3. A 312 Specification for Seamless and Welded Austenitic Stainless Steel Pipe.
4. A 512 Specification for Cold-Drawn Buttweld Carbon Steel Mechanical Tubing.
5. A 554 Welded Stainless Steel Mechanical Tubing
6. A 582 Free Machining Stainless and Heat Resisting Steel Bars.
7. C 595 Specification for Blended Hydraulic Cements.
8. E 84 Test Method for Surface Burning Characteristics of Building Materials.
9. E 894 Standard Test Methods for Anchorage of Permanent Metal Railing Systems and Rails for Buildings.

10. E 935 Standard Test Methods for Performance of Permanent Metal Railing Systems and Rails for Buildings.
11. E 985 Specification for Permanent Metal Railing Systems and Rails for Buildings

G. Americans with Disabilities Act Accessibility Guidelines (ADAAG)
H. General Service Administration (GSA) Federal Specifications (FS)
   1. QQ-S-766 Stainless Steel, Class 302 or 304.
   2. TT-P-645 Primer, Paint, Zinc Chromate, Alkyd Type.
I. International Code Council (ICC)
   1. International Building Code (IBC)
J. National Association of Architectural Metal Manufacturers (NAAMM)
   1. Metal Finishes Manual
   2. Pipe Railing Manual
   3. Stair Manual
K. National Fire Protection Association (NFPA)
   1. 101 Life Safety Code
L. National Ornamental and Miscellaneous Metals Association (NOMMA)
   1. Metal Rail Manual
M. National Institute of Building Sciences
   1. Metric Guide for Federal Construction
N. Society of Automotive Engineers (SAE)
   1. SAE/AMS QQ-S-763 Steel Bars, Wire, Shapes and Forgings; Corrosion Resistant

Section 1.05 REQUIREMENTS

A. Check governing codes for requirements.

   1. Handrail and Guardrail assemblies and attachments shall withstand a minimum uniform load of (reference structural drawings) pounds per foot applied [vertically down] [and] [horizontally], but not simultaneously on the top rail.

   2. Guardrail intermediate posts and cables shall be designed for a uniform load of not less than (reference structural drawings) pounds per square foot over the gross area of the guard of which they are part. Reactions due to this loading need not be added to the loading specified for the main supporting members of the guardrails.

   3. Railing frame components and cable hardware shall be designed to withstand loads encountered without excessive deflection or distortion when cables are tensioned to conform to building code requirements.

Section 1.02 SUBMITTALS

A. Submit shop drawings and product data under provisions of Section [01300] [01340].
B. Indicate component details, materials, finishes, connection and joining methods, and the relationship to adjoining work.
C. Submit manufacturer's installation instructions under provisions of Section [01300] [01340].
D. Submit samples of the following:
   1. Railing frame components by fabricator
   2. Intermediate cable braces by fabricator
   3. Cables by manufacturer of fabricator
   4. Grommets by manufacturer or fabricator

Section 1.03 QUALITY ASSURANCE

A. Qualifications:
   1. Furnish references listing projects of similar size and scope
B. Regulatory Requirements:
   1. Components and installation are to be in accordance with state and local code authorities

2. Components and installation are to follow current ADA and ICC/ANSI A117.1 guidelines.

C. Certifications
1. Furnish certification that all components and fittings are furnished by the same manufacturer or approved by the primary component manufacturer.
2. Furnish certification that components were installed in accordance to the manufacturer's engineering data to meet the specified design loads.

D. Pre-Installation Meeting
1. Prior to the beginning of work, conduct a pre-job conference at the job site.
2. Provide seven calendar days advance written notice ensuring the attendance by competent authorized representatives of the fabricator, building owner's representative, architect and subcontractors whose work interfaces with the work of this section.
3. Review the specifications to determine any potential problems, changes, scheduling, unique job site conditions, installation requirements and procedures and any other information pertinent to the installation.
4. Record the results of the conference and furnish copies to all participants.

Section 1.04 DELIVERY, STORAGE AND HANDLING

A. Deliver materials to the job site in good condition and properly protected against damage to finished surfaces.

B. Storage on site:
1. Store material in a location and in a manner to avoid damage. Stacking shall be done in a way, which will prevent bending.
2. Store material in a clean, dry location away from uncured concrete and masonry. Cover with waterproof paper, tarpaulin, or polyethylene sheeting in a manner that will permit circulation of air inside the covering.
3. Keep handling on site to a minimum. Exercise particular care to avoid damage to finishes of material.

PART 2 -- PRODUCTS

Section 2.01 ACCEPTABLE MANUFACTURER

A. Railing [pipe] [tube] and components shall be as manufactured or supplied by The Wagner Companies.; P.O. Box 423; Milwaukee, WI 53007. Phone: 800-243-6914. Fax: 414-214-0550. Web site: www.wagnercompanies.com. E-mail: info@mailwagner.com.

Section 2.02 MATERIALS AND FINISHES

A. Stainless Steel: Type 304 (18-8)
1. Tubing: ASTM A 269
2. Cable: MIL-W-97161, Type II, Composition B
3. Cable Hardware: ASTM A 276 and A 479, SAE/AMS QQ-S-763, Type 316
4. Finish: Stainless steel

Section 2.03 RAILING SYSTEM

A. Material shall conform to 2.02. and be finished in accordance with 2.02.

B. Horizontal Stainless Steel Cable Railing System: Ultra-tec Railing System.

C. Style:
1. Members: 2" pipe
2. Material: Stainless steel, ASTM A 312, Type 304L or 316L, minimum tensile strength 70,000 psi.

D. Welded Receive: Type 304 stainless steel. Weld into outside wall of an end post. Hide weld by grinding welded surface to original contour.

E. Welded Tab: Type 304 stainless steel. Weld into outside wall of an end post. Hide weld by grinding welded surface to original contour.

F. Invisiware Threaded Tab: Screws into drilled and tapped hole in the inside wall of an end post.

G. Rail Height: 42 ½" As indicated on the drawings].

H. Pipe Railing End Post Transition to Top Rail: Radius.

I. Intermediate Cable Braces: *for horizontal cable railing*
   1. Type: 1-piece.
   2. Size: ¼" x 1"
   3. Spacing: As indicated on the drawings.
   4. Material: stainless steel

J. Wood Railing Frame Components: As specified in Section 06430.

Section 2.04 CABLES AND CABLE HARDWARE

A. Cable Hardware For Use With Wood Railing Frame Components:
   1. Material: ASTM A 276 and A 479, SAE/AMS QQ-S-763, Type 316 stainless steel.
   2. Swaging: Swage hardware onto ends of cables n manufacturer's.
   3. Swaging Ferrule: Retains nonadjustable and adjustable clevis fitting onto cables.
   4. Swaged Ferrule with Flat Washers: Retains washers on cables placed into counterbore. Use with counterbored hole in end post.
   5. Hanger Bolt Fitting: Screw lag threaded end into end post. Expose fine screw thread for mating with body section of adjustable clevis fitting and lock nut.
   6. Lag Eye Fitting: Screw lag threaded end into end post. Expose paddle-shaped eye to accommodate nonadjustable or adjustable clevis fitting.
   7. Swaging Stud: Use with receiver. Provides a means of tensioning cables in as small an area as is feasible.
   8. Receiver: Invisiware Receiver. Allows tensioning hardware to be hidden within end post. Use with 1/4" thick x 1 inch wide flat bar attached to outside of end post with stainless steel flat head screws. Use with washer to place into counterbore. Use with counterbored hole in end post.
   9. Nonadjustable Clevis Fitting: Fixed Jaw. Held onto cables by swaging ferrule.
   10. Adjustable Clevis Fitting: Adjust-A-Jaw Tensioner. Provides a considerable amount of take-up in cables. Held onto cables by swaging ferrule.
   11. Radius Ferrule: Nonadjustable. Attaches cable to post with hardware hidden inside post.

Section 2.05 FASTENERS

A. All mechanical fasteners used [in the assembly of cable railing] shall be manufactured from stainless steel.
B. Exposed mechanical fasteners for use with bronze materials shall be manufactured from yellow brass.
C. Cement: Hydraulic, ASTM C 595, factory prepared with accelerator.

Section 2.06 HANDRAIL BRACKETS

A. Stainless steel: railings to return to wall and posts top and bottom of handrail. Intermediate support at each post of stair run.

Section 2.07 FABRICATION

A. Form rail-to-end post connections and all changes in rail direction by radius elbows.
B. Cut material square and remove burrs from all exposed edges, with no chamfer.
C. Make exposed joints butt tight and flush.
D. Close exposed ends of pipe handrail by use of appropriate end cap.
E. For posts set in concrete, furnish matching sleeves or inserts not less than 5 inches long.
F. Locate intermediate rails midway between top rail and finished floor or center line of tread.
G. Verify dimensions on site prior to shop fabrication.

PART 3 -- EXECUTION

Section 3.01 PREPARATION

A. Supply items to be [cast in concrete] [embedded in masonry] [placed in partitions].
B. Examine areas to receive cable railing system. Notify Architect if areas are not acceptable. Do not begin installation until unacceptable conditions have been corrected.

Section 3.02 DISSIMILAR METALS

A. When bronze and aluminum components come into contact with dissimilar metals, surfaces shall be kept from direct contact by painting the dissimilar metal with [a heavy coat of a proper primer] [asphalt paint].
B. When aluminum components come into contact with cement or lime mortar, exposed aluminum surfaces shall be painted with [heavy bodied bituminous paint] [water-white methacrylate lacquer] [zinc chromate].

Section 3.03 INSTALLATION

A. Install in accordance with shop drawings [and manufacturer's instructions] at locations indicated on the drawings.
B. Erect work [square and level,] [horizontal or parallel to rake of steps or ramp,] rigid, [and] free from distortion or defects detrimental to appearance or performance.
C. Anchor cable railing system to mounting surface as indicated on the drawings.
D. Do not field weld components.
E. Use manufacturer's supplied cable hardware.
F. Terminate and tension cables in accordance with manufacturer's instructions.
G. Tension cables to a minimum of 400 pounds each in sequence in accordance with manufacturer's instructions.
H. Ensure cables are clean, parallel to each other and without kinks or sags.
I. Adjust cables and cable hardware as required to provide properly installed cable railing system as directed by Architect.
J. Expansion joints shall be provided as needed to allow for thermal expansion or contraction.

Section 3.04 PROTECTION

A. Protect cable railing system and finish from damage during construction.

Section 3.05 CLEANING

A. As installation is completed, wash thoroughly using clean water and soap; rinse with clean water.
B. Do not use acid solution, steel wool or other harsh abrasives.
C. If stain remains after washing, remove finish and restore in accordance with NAAMM Metal Finishes Manual.
D. Finish must not be removed from anodized aluminum. Reanodizing can only be done by removing railing and returning it to the anodizer.

Section 3.06 REPAIR OF DEFECTIVE WORK

A. Remove stained or otherwise defective work and replace with material that meets specification requirements.
B. Repair damaged finish as directed by Architect.
C. Replace defective or damaged components as directed by Architect.

END SECTION

CABLE RAIL

Marquette University
Designed by: Opus Design Build

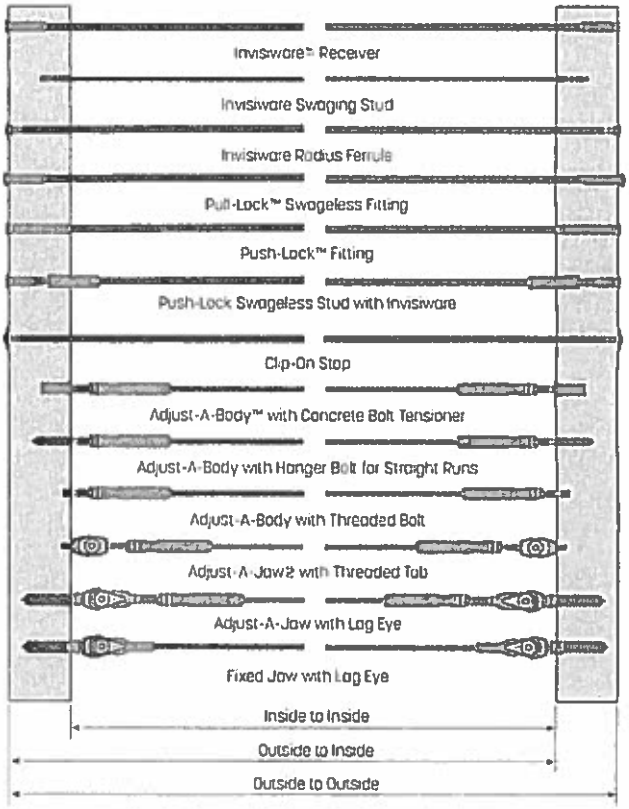
Invisiware® Receiver
Invisiware Swaging Stud
Invisiware Radius Ferrule
Pull-Lock™ Swageless Fitting
Push-Lock™ Fitting
Push-Lock Swageless Stud with Invisiware
Clip-On Stop
Adjust-A-Body™ with Concrete Bolt Tensioner
Adjust-A-Body with Hanger Bolt for Straight Runs
Adjust-A-Body with Threaded Bolt
Adjust-A-Jaw2 with Threaded Tab
Adjust-A-Jaw with Lag Eye
Fixed Jaw with Lag Eye
Inside to Inside
Outside to Inside
Outside to Outside

INSTALLATION GUIDE

March 1, 2012

The Wagner Companies
PO Box 423
Butle, WI 53007-0423

1-888-243-6914
Fax 414-214-0450

e-mail: TechCSR@mailwagner.com
www.wagnercompanies.com

TABLE OF CONTENTS

	Page
Before You Get Started	
Rail Finish	IG-1
Materials Required	IG-1
Tools Required	IG-1–IG-2
Installing Grommets	IG-2
Measuring and Installing Cable—Horizontal Railings	
Measuring Cable Lengths	IG-3
Installing Cable	IG-4–IG-14
Tensioning Cables	IG-14
Wood Railings—Mounting Alternatives/Hole Drilling	IG-15–IG-17
Measuring and Installing Cable—Vertical Railings	IG-18–IG-20
Swaging Instructions	IG-20–IG-23
Ultra-tec ® "Clip-On" Fixed Jaw Installation Instructions	IG-23
Using Invisiware ® Receivers on Stairways	IG-24–IG-25
Ultra-tec ® "Clip-On" Stop Installation Instructions	IG-26
Push-Lock™ Fittings Installation Instructions	IG-27–IG-29
Pull-Lock™ Stop-End Fittings Installation Instructions	IG-30 –IG-31
Receiver with Push-Lock™ Stud Installation Instructions	IG-32–IG-37
PL-Key Instructions	IG-38

Ultra-tec®, Invisiware®, Adjust-A-Body®, and Adjust-A-Jaw®
are registered trademarks and Push-Lock™ and Pull-Lock™ are trademarks of
The Cable Connection, Carson City, NV 89706.
© 2012 The Cable Connection, Carson City, NV 89706. All rights reserved.

The Wagner Companies
www.wagnercompanies.com
info@mailwagner.com
1-888-243-6914

BEFORE YOU GET STARTED

Rail Finish

If your rail is to be painted, powder coated or otherwise finished in any way, we strongly recommend that you apply the finish after all holes are drilled and prior to stringing the cable.

Materials Required

Some parts require screws to mount them to your railing. If they were not ordered from the factory, then you will need to obtain mounting screws for the parts shown in the chart below.

PART NUMBERS	FOR CABLE DIAMETER	SCREW REQUIRED	FACTORY PART NO.*
Adjust-A-Ja w® Tensioner s			
A-J62	1/8" or 3/16"	1/4-28 x 1/2"	SC-6
A-J82 A-J122	1/4", 5/16", 3/8"	3/8-24 x 3/4"	SC-8
Adjust-A-Bod y® with Threaded Eye Tensioner s			
A-JTE6	1/8" or 3/16"	1/4-28 x 1/2"	SC-6
A-JTE8	1/4"	3/8-24 x 3/4"	SC-8
Push-Loc k™ with Threaded Eye Fittings			
PL-TE4	1/8"	1/4-28 x 1/2"	SC-6
PL-TE6	3/16"		

*Factory supplied screws are stainless steel button-head screws.

In areas prone to tampering, a permanent setting thread sealant is recommended for use with screws.

Tools Required

The tools listed here assume you will be swaging at least one end of the cable in the field using an Invisiware ® field swager. If no field swaging is required, only those tools indicated with * may be required.

*Cable Cutters. C9 for cables up to 3/16"; C12 for cables larger than 3/16".

Air Compressor.
Minimum 5.8 c.f.m. at 90 p.s.i. and a minimum 20 gallon tank. Air pressure should be regulated to a minimum of 120 p.s.i., not to exceed 140 p.s.i.

Ultra-tec ® Portable Pneumatic/Hydraulic Swager. (If you are renting one from the factory or a factory representative, be sure to specify the uncoated diameter of the cable you are swaging, so the correct swager will be supplied. Rented swagers generally come with most other special tools required to field

^ Model 610 Swager kit for 1/8" and 3/16" cable.

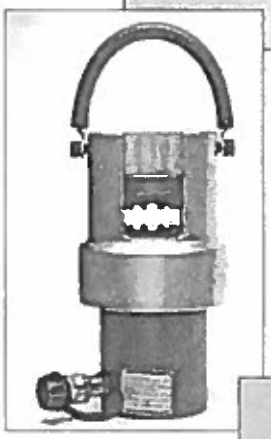

< Model 650 Swager for 1/8" through 3/8" cable.

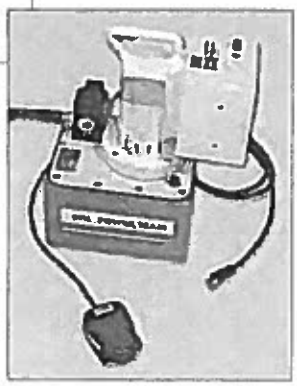

> Electric Hydraulic 120V Pump

IG-1
3/1/12

The Wagner Companies
www.wagnercompanies.com
info@mailwagner.com
1-888-243-6914

Tools Required (continued)

swage and install cable, including hose fittings, cable grip locking pliers, cable cutter, and GO gauge for measuring the swaged diameter of Invisiware ˚ Radius Ferrules. A pre-tensioner can also be furnished upon request.)

*Ultra-tec ˚ Pre-tensioning Tool (optional). Since some Invisiware ˚ hardware has a minimum of take-up on longer runs (over 30 feet) you may want to use a pre-tensioning tool. In ordering, be sure to specify the cable diameter you will be using it with.

*Cable Grip Locking Pliers. To grip the cable while tensioning the end fittings without damaging the cable. (Available from the factory).

*Wrenches. If installing Invisiware ˚ Receivers (including when they are used with Push-Lock™ Studs), an Allen wrench to tension the cable. See chart below.

PA RT NUMBERS	FOR CABLE DIAMETER	HEX HOLE SIZE
R-6-12 thru R-6-62	1/8" or 3/16	3/16"
R-8-22 thru R-8-52	1/4"	7/32"
R-12-32 thru R-12-52	5/16"or 3/8"	5/16"

If installing Adjust-A-Jaw ˚, Adjust-A-Body ˚, or Push-Lock™ Stud tensioners, an open-end wrench to tension the cables. See chart below.

PART NUMBERS	FOR CABLE DIAMETER	OPEN-END WRENCH SIZE
Adjust-A-Jaw ˚ Te nsioners		
A-J62	1/8" or 3/16"	7/16"
A-J82 A-J122	1/4", 5/16", 3/8"	11/16"
Adjust-A-Body ˚ Tensioners		
ANY	1/8" or 3/16"	7/16"
ANY	1/4"	9/16"
Push-Lock ˚ Stud Te nsioners		
PLST -4	1/8"	3/8"

If installing Adjust-A-Body ˚ with Hanger Bolt Tensioners, an open-end wrench or hanger bolt driver installation tool to install the hanger bolts into the wood post.

PA RT NUMBERS	FOR CABLE DIAMETER	OPEN-END WRENCH SIZE
A-JB6	1/8" or 3/16"	1/4"
A-JB8	1/4"	3/8"

Calipers, if you are swaging and installing Invisiware ˚ Radius Ferrules, you will need a means to measure the diameter of the swaged fitting. ("GO" gauges for this purpose are normally included with Ultra-tec ˚ Portable Swagers when rented from the factory).

Grommet Installation Tool (available from the factory), and hammer if you will be installing grommets.

*Drills and Drill Bits as required, if installing in a wood railing—see Wood Railings under "Measuring and Installing Cable—Horizontal Railings".

*Cut-off Kit, if using Pull-Lock™ fittings.

INSTALLING GROMMETS

IMPORTANT NOTE: If grommets are being used on intermediate posts, cable braces, or in the cable exit hole of end posts, then grommets should be installed before cable is run.

To install grommets, see Fig. K below. Place the larger diameter of the grommet onto the grommet installation tool and the smaller diameter at the hole in the post. Tap the tool lightly with a hammer.

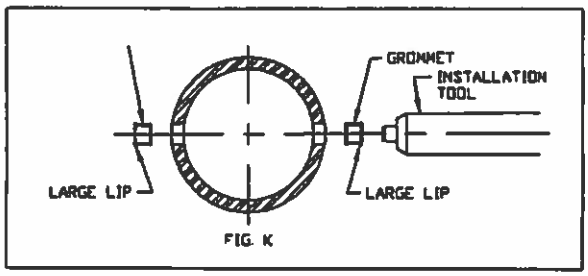

FIG. K

The Wagner Companies
www.wagnercompanies.com
info@mailwagner.com
1-888-243-6914

MEASURING AND INSTALLING CABLE

Horizontal Railings

Measuring Cable Lengths

This section applies only if you will be cutting and swaging the cables. If you have ordered your cables cut to length with fittings already swaged on, or you are using swageless fittings (Pull-Lock™, Push-Lock™, Push-Lock™ Stud), you can skip this section on "Measuring Cable Lengths."

Measure the length of the run from the outside of one terminating end post to the other terminating end post. Over estimate when corners are involved. See Figures A and B below.

Note that Post A is always the first end to which hardware is attached. When only one end has a tensioning device (Invisiware ® Receiver, Adjust-A-Jaw ® or Adjust-A-Body ® tensioner) that tensioning device is attached to Post B and the non-tensioning device is attached to Post A. Post B is always a tensioning end.

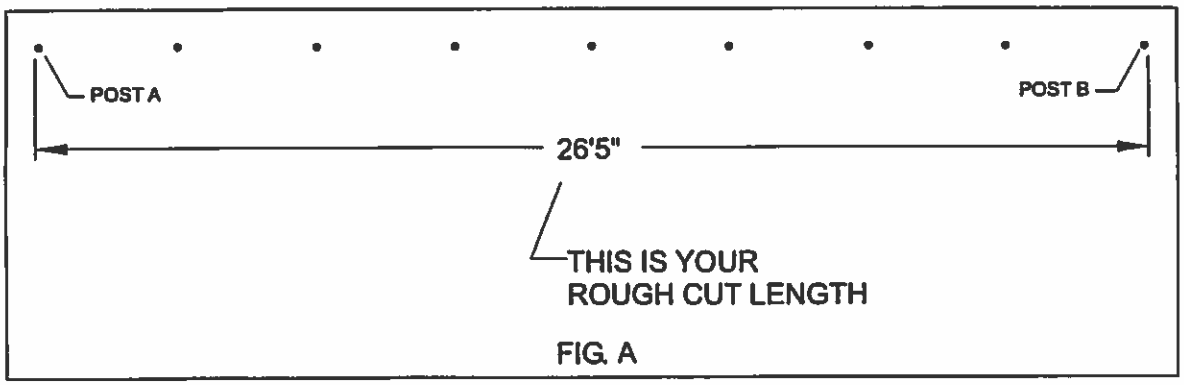

FIG. A

Measure out cable on a relatively clean surface (see Figure B below). A lawn or swept concrete surface would be fine. Cut cable to length using Cable Cutter.

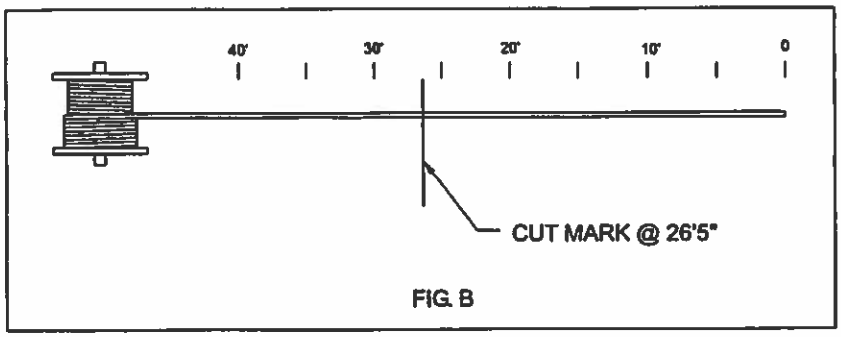

FIG. B

Note: Make sure you have a positive holding device at the zero end. Cutting the cables takes very little time. It is best to have one person stand at the zero end while another operates the cable cutter at the cut mark.

IG-3
3/1/12

The Wagner Companies
www.wagnercompanies.com
info@mailwagner.com
1-888-243-6914

Installing Cable (continued)

IF YOU ARE USING PUSH-LOCK™ OR PULL-LOCK™ FITTINGS, OR PUSH-LOCK™ STUD TENSIONERS, SEE SEPARATE INSTRUCTIONS FOR THOSE FITTINGS (pages IG-28 through IG-38).

NOTE: Where only one end of the cable has an adjusting fitting (Invisiware ® Receiver or Adjust-A-Jaw ® or Adjust-A-Body® tensioner), we recommend that you swage the unadjusting end, Post A, first (before the cables are strung) and the adjusting end, Post B, last (after the cables have been strung).

A. Unless already swaged (attached to the cables), swage the fittings to be used onto one end of the cut cables (see "Swaging Instructions," pages IG-20 to IG-23).

Where Invisiware ® Radius Ferrules will be used, 1) Slide the washer onto the cable; 2) swage the Radius Ferrule onto the end of the cable (see "Swaging Instructions," pages IG-20 to IG-23); 3) slide the washer over the body of the Radius Ferrule; 4) feed the bare end of the cable through the hole in Post A from the back side, until the fitting's head with washer rests against the back side of the post (or in the counterbore if applicable).

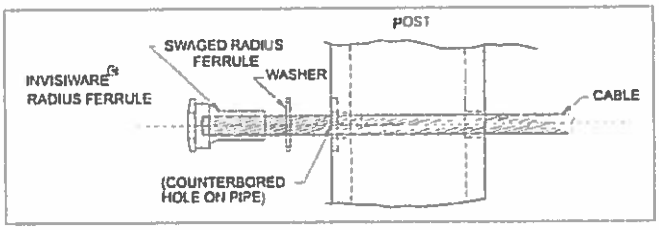

Where Invisiware ® Receivers are being used, swage the Stud onto the end of the cable to be attached to Post A (see "Swaging Instructions," pages IG-20 to IG-23).

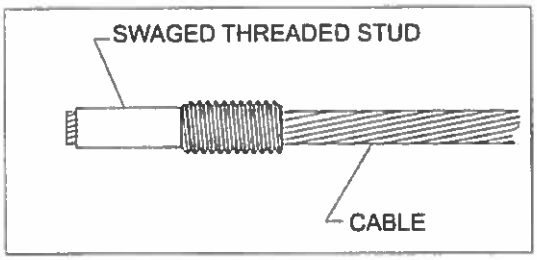

Where Adjust-A-Jaw ® or Adjust-A-Body ® Type Tensioners are being used, slide the Body onto the cable and swage the Ferrule onto the end of the cable to be attached to Post A (see "Swaging Instructions," pages IG-20 to IG-23).

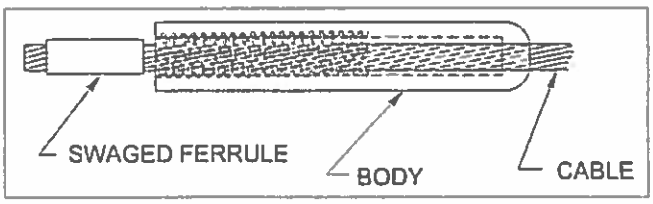

The Wagner Companies
www.wagnercompanies.com
info@mailwagner.com
1-888-243-6914

Installing Cable (continued)

Where Ultra-tec ® Fixed Jaws are being used, slide the Fixed Jaw onto the cable and swage the Ferrule onto the end of the cable to be attached to Post A (see "Swaging Instructions," pages IG-21 to IG-24).

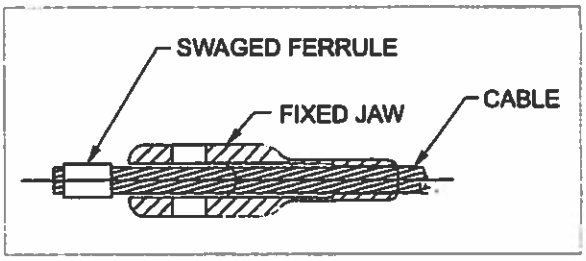

NOTE: If you are using Ultra-tec ® "Clip-on" Fixed Jaws with the Ferrule already swaged onto the cable or Ultra-tec ® "Clip-on" Stops you will have to feed the cable from the Post B end through all intermediate posts to Post A, before installing the Fixed Jaw onto the Post A end of the cable. See "Ultra-tec ® Clip-On Fixed Jaw Installation Instructions" (page IG-23) or "Ultra-tec ® "Clip-on Stop Installation Instructions" (page IG-26) for attaching the Fixed Jaw or "Clip-on Stop" to the cable.

B. String cable through intermediate posts and braces to Post B.

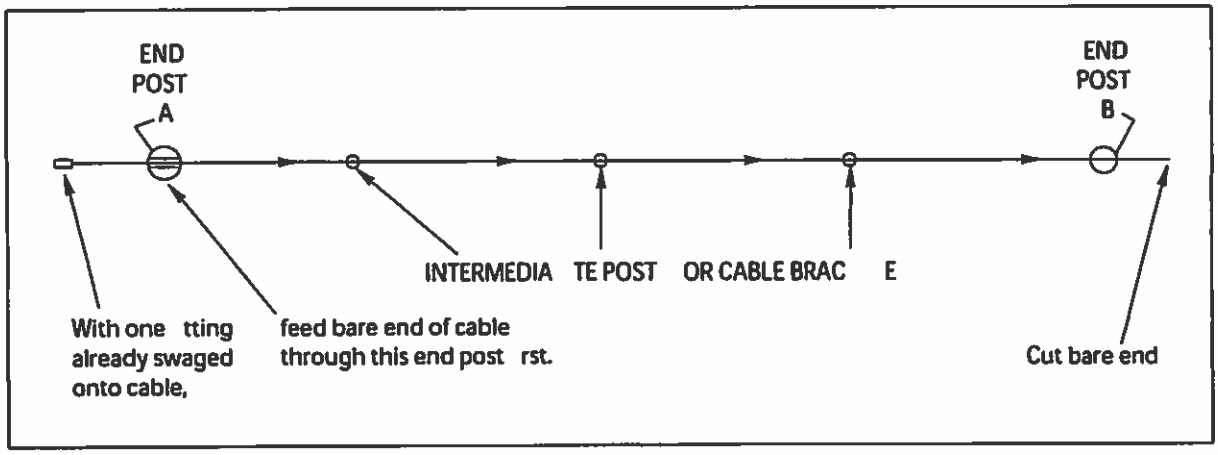

The Wagner Companies
www.wagnercompanies.com
info@mailwagner.com
1-888-243-6914

Installing Cable (Continued)

C. Attach fittings to end Post A.

If using Ultra-tec ˚ Fixed Jaw bolt the fitting to the tab, through the hole in the structural tee, or the lag eye (in wood post) on the end post, using the screws specified under "Materials Required."

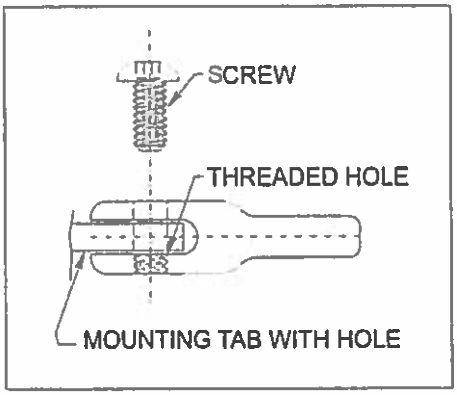

If using Adjust-A-Jaw ˚ or Adjust-A-Body ˚ with Threaded Eye Tensioners:

If you are installing the tensioner using tabs, holes in a structural tee or lag eyes (in wood) attach the clevis portion of the fitting to the tab, lag eye or through the hole in structural tee on the end post, using the screws specified under "Materials Required."

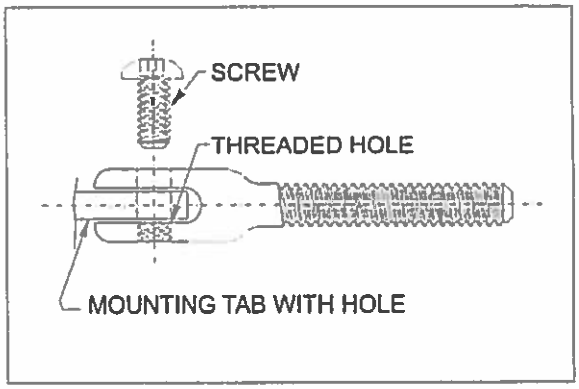

Screw the lock nut onto the threads of the Clevis or Eye, then hold the cable closely behind the body and turn the body by hand at least 6 full turns onto the threaded end of the Clevis. (See note on page IG-7).

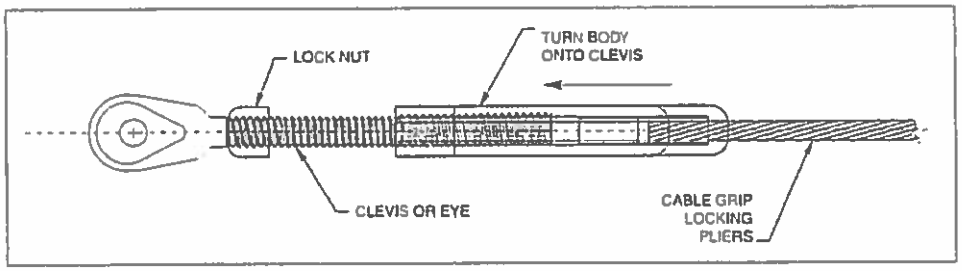

The Wagner Companies
www.wagnercompanies.com
info@mailwagner.com
1-888-243-6914

Installing Cable (Continued)

If you are installing into wood with a hanger bolt, screw the hanger bolt into a pre-drilled pilot hole in the post. Screw the lock nut onto the threads of the bolt, then hold the cable closely behind the body and turn the body by hand at least 6 full turns onto the threaded end of the bolt. (See note below)*

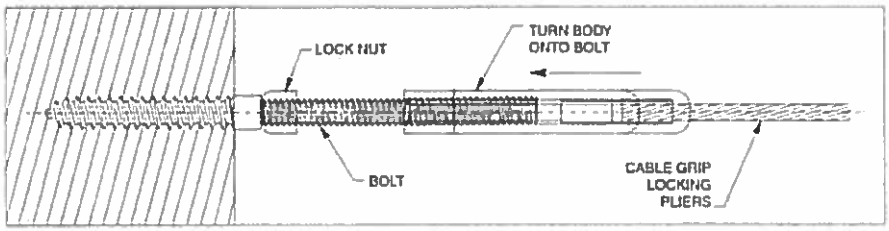

If you are installing into a threaded hole in a metal post, screw the bolt into the threaded hole in the post. Screw the lock nut onto the threads of the bolt, then hold the cable closely behind the body and turn the body by hand at least 6 full turns onto the threaded end of the bolt. (See note below)*

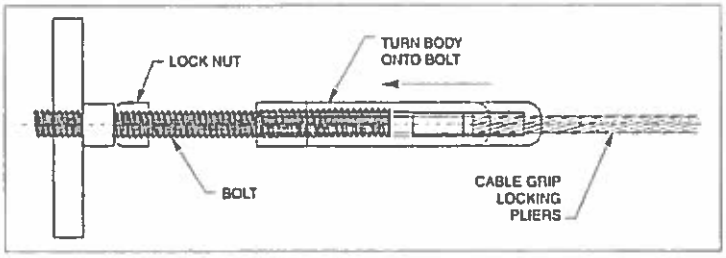

If you are installing an Adjust-A-Body * concrete anchor bolt end into a concrete anchor bolt, screw the bolt into the threaded hole in the anchor bolt. Screw the lock nut onto the threads of the bolt, then hold the cable closely behind the body and turn the body by hand onto the threaded end of the bolt at least 6 full turns. (See note below)*

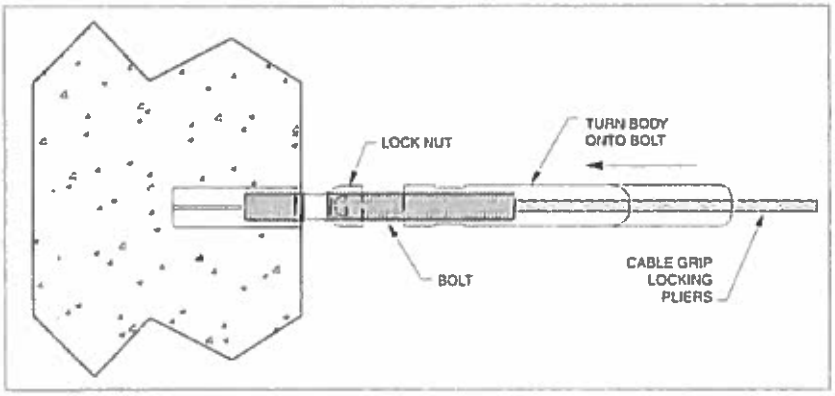

*NOTE: This will allow for maximum take-up. The fewer turns you make at this step, the more thread that will be exposed when the installation is complete. Each job is different, so we suggest that you string and lightly tension one cable between end posts, to determine how many turns you will make in turning the body onto the male threaded end in order to minimize the amount of exposed thread at both ends.

The Wagner Companies
www.wagnercompanies.com
info@mailwagner.com
1-888-243-6914

Installing Cable (Continued)

If using Invisiware ˚ Receiver , slide the washer over the body of the Receiver, then feed the Receiver through the hole in back of the post and into the hole on inside wall of the post (metal). If you have a metal double post end post construction, be sure to place spacers between the double posts, as you feed the fitting through. By hand, screw the Receiver onto the threaded Stud at least 6 full turns.

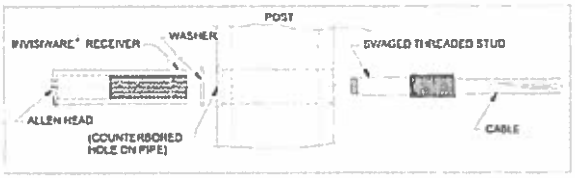

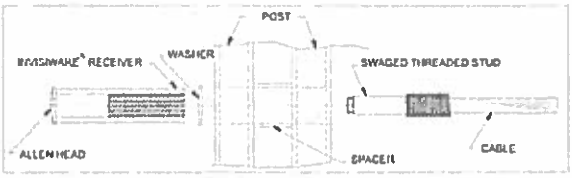

DOUBLE END POST CONSTRUCTION

For wood posts, follow the same instructions, except you will have to feed the cable (with the Stud swaged on the end) through the post from the inside to meet the Receiver inside the post, where you will turn the Receiver onto the Stud using an Allen wrench.

If you are using Invisiware ˚ Radius Ferrule, make sure the fitting is through the hole in the back of the post with the head with washer resting against the back side of the post (or in the counterbore if applicable) as you proceed to the next step.

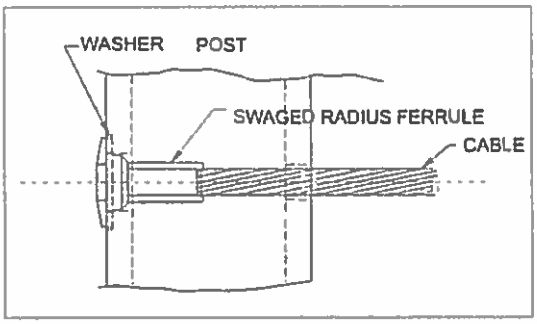

D. Pull cable toward end Post B. Use Ultra-tec ˚ Pre-tensioning Tool, if required (see below).

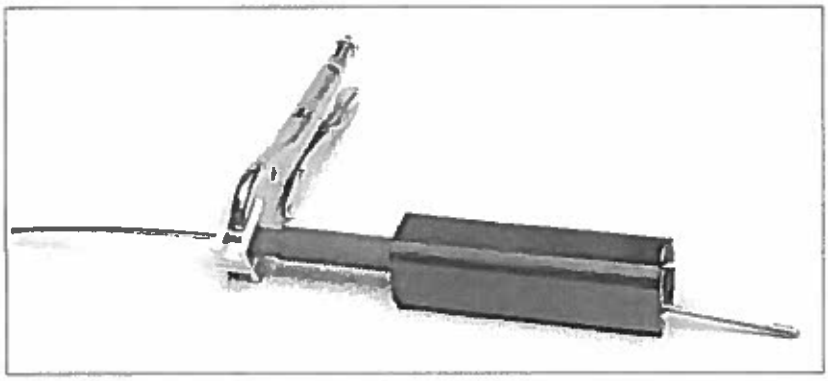

The Wagner Companies
www.wagnercompanies.com
info@mailwagner.com
1-888-243-6914

Installing Cable (Continued)

E. Attach fittings at end Post B

If installing Invisiware ® Receiver at Post B

NOTE: If installing Invisiware ® Receiver on a stairway, see "Using Invisiware ® Receivers on Stairways" before proceeding.

1. Cut Cable at Post B end. (Assumes cable is already attached to Post A.)

   Mark and cut the cable at the location shown in relation to end Post B (see Figure R below for steel posts, Figure RW below for wood posts). NOTE: this cut mark will allow for maximum take-up. However, it may leave more thread exposed than necessary after tensioning. This length can be altered to achieve the most favorable results.

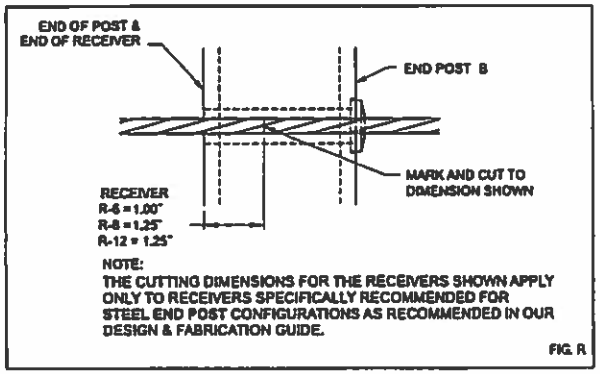

FIG. R

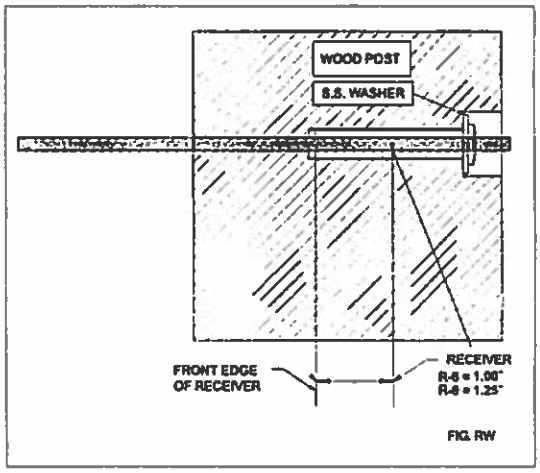

FIG. RW

2. Swage Stud onto cable (see "Swaging Instructions," pages IG-20 to IG-23).

3. Slide the washer over the body of the Receiver, then feed the Receiver through the hole in the back of the post. If you have a double post end post construction, be sure to place spacers between the double posts, as you feed the fitting through. By hand, screw the Receiver onto the swaged Stud at least 6 full turns. Do not tension cables until all cables have been installed between end posts A and B.

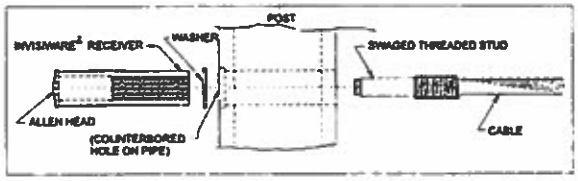

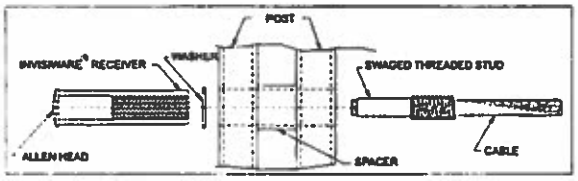

DOUBLE END POST CONSTRUCTION

For wood posts, follow the same instructions, except you will have to feed the cable (with the Stud swaged on the end) through the post from the inside to meet the Receiver inside the post, where you will turn the Receiver onto the Stud using an Allen wrench.

The Wagner Companies
www.wagnercompanies.com
info@mailwagner.com
1-888-243-6914

Installing Cable (Continued)

4. Repeat above steps for each cable to be installed between end posts A and B.

5. After all the cables have been installed, tension the cable (to approx. 400 lbs.) by holding the cable (using cable grip locking pliers) closely behind the Stud. Turn the Receiver clockwise with an Allen Wrench (see Figure U). See "Tensioning Cables" (page IG-14) for sequence to use in tensioning cables.

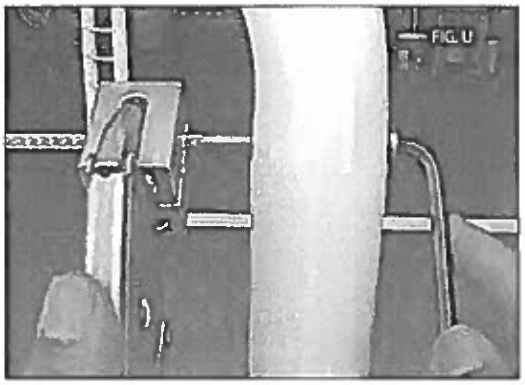

If installing Adjust-A-Jaw ® or Adjust-A-Body ® type tensioner at Post B

1. Cut cable at Post B end. (Assumes cable is already attached to Post A).

   If you are attaching the tensioner to a tab, lag eye or hole in a structural tee, mark and cut the cable at the location shown in relation to the center of the mounting hole at Post B (see Figure T below).
   NOTE: this cut mark will allow for maximum take-up. However, it may leave more thread exposed than necessary after tensioning. This length can be altered to achieve the most favorable results.

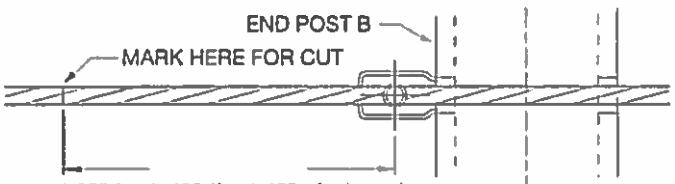

4.60" for A-J62 (for 1.45" of take-up)
5.40" for A-J82 (for 1.60" of take-up)
8.60" for A-J122 (for 3.0" of take-up)

4.06" for A-JTE6 (for 1.5" of take-up)
4.90" for A-JTE8 (for 1.6" of take-up)

FIG. T

The Wagner Companies
www.wagnercompanies.com
info@mailwagner.com
1-888-243-6914

Installing Cable (Continued)

If the tensioner is mounted with the bolt screwed into a wood post, a threaded hole in a metal railing, or a concrete anchor, mark and cut the cable at the location shown in relation to end Post B (see figures below). NOTE: this cut mark will allow for maximum take-up. However, it may leave more thread exposed than necessary after tensioning. This length can be altered to achieve the most favorable results.

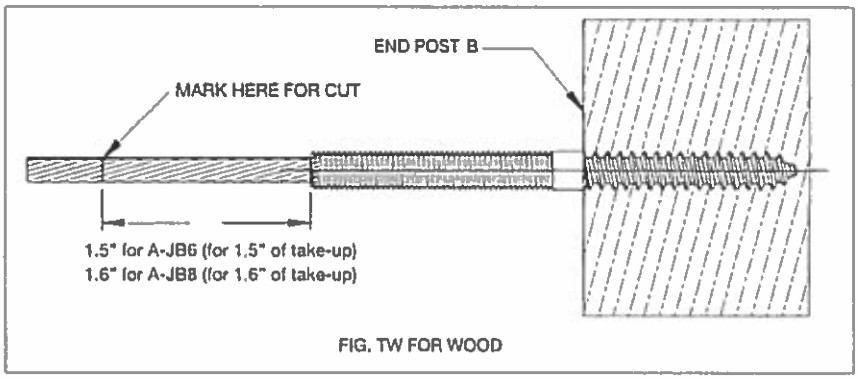

FIG. TW FOR WOOD

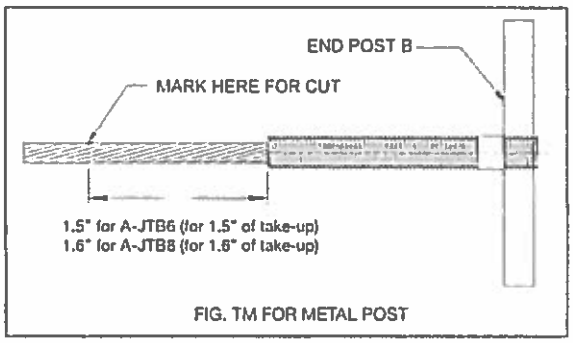

FIG. TM FOR METAL POST

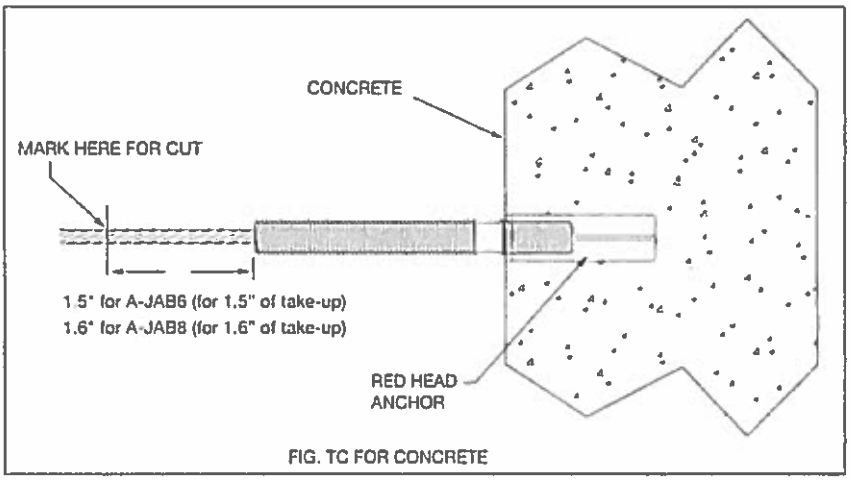

FIG. TC FOR CONCRETE

The Wagner Companies
www.wagnercompanies.com
info@mailwagner.com
1-888-243-6914

Installing Cable (Continued)

2. Slide the Body onto the cable and swage the Ferrule onto the end of the cable (see "Swaging Instructions," pages IG-20 to IG-23).

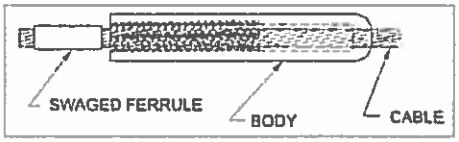

3. Attach Tensioner to Post.

If you are installing the tensioner using tabs, holes in a structural tee or lag eyes (in wood) attach the Clevis or Eye portion of the fitting to the tab, lag eye or through the hole in structural tee on the end post, using the screws specified under "Materials Required."

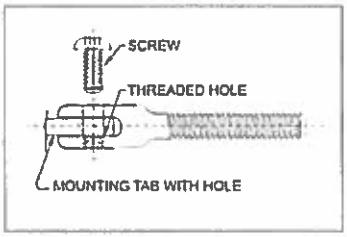

Screw the lock nut onto the threads of the Clevis or Eye, then hold the cable closely behind the body and turn the body by hand onto the threaded end of the Clevis at least 6 full turns.

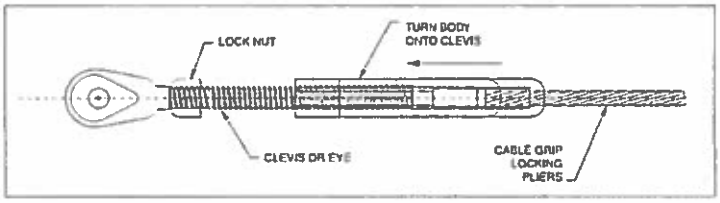

If you are installing into wood with a hanger bolt, screw the hanger bolt into a pre-drilled pilot hole in the post. Screw the lock nut onto the threads of the bolt, then hold the cable closely behind the body and turn the body by hand onto the threaded end of the bolt at least 6 full turns.

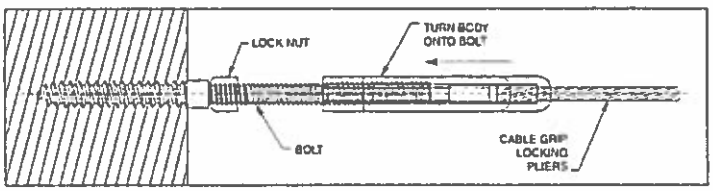

The Wagner Companies
www.wagnercompanies.com
info@mailwagner.com
1-888-243-6914

Installing Cable (Continued)

If you are installing into a threaded hole in a metal post, screw the bolt into the threaded hole in the post. Screw the lock nut onto the threads of the bolt, then hold the cable closely behind the body and turn the body by hand onto the threaded end of the bolt at least 6 full turns.

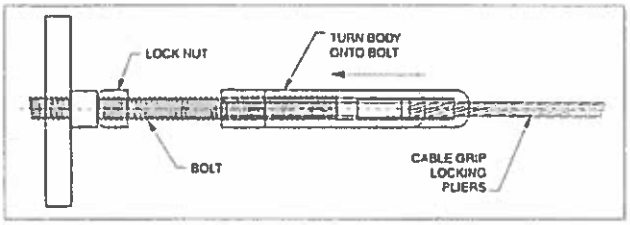

If you are installing an Adjust-A-Body ® concrete anchor bolt end into a concrete anchor bolt, screw the bolt into the threaded hole in the anchor bolt. Screw the lock nut onto the threads of the bolt, then hold the cable closely behind the body and turn the body by hand onto the threaded end of the bolt at least 6 full turns.

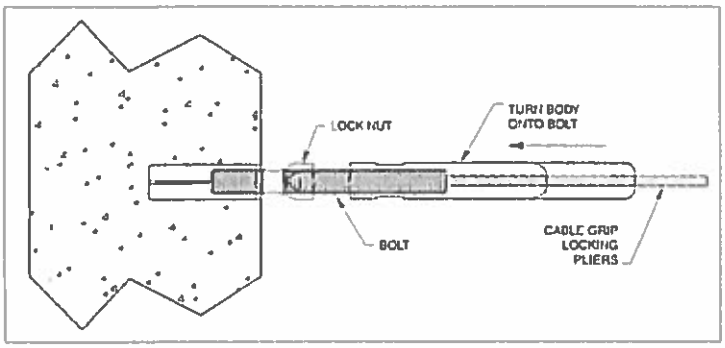

4. Repeat the above steps for each cable to be installed. Do not tension the cables, until all cables have been installed between end posts A and B.

5. After all the cables have been installed, tension the cable (to approximately 400 lbs.) with an open end wrench, holding the cable with cable grip locking pliers to prevent it from rotating (see illustration below). See "Tensioning Cables" (page IG-14) for sequence to use in tensioning cables.

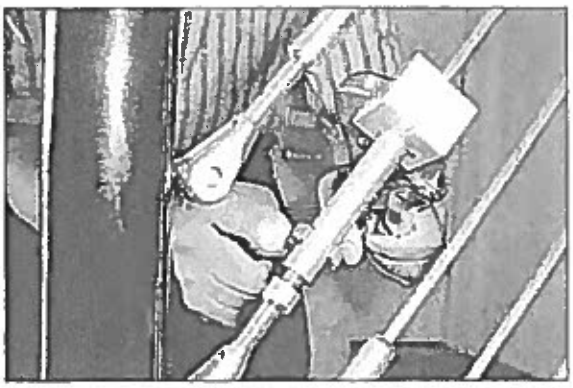

The Wagner Companies
www.wagnercompanies.com
info@mailwagner.com
1-888-243-6914

Installing Cable (Continued)

6. If tensioners are mounted to tabs, structural tees or lag eyes, tighten the mounting screws.

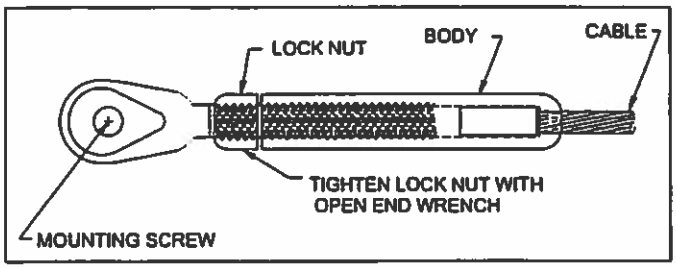

7. On all installations, tighten the lock nut against the body of the fitting with an open end wrench.

NOTE: In areas prone to tampering, the use of permanent setting thread sealant is recommended for mounting screws and lock nuts.

F. Tensioning cables

NOTE: Tension in sequence, beginning with the outside cables and moving from side to side toward the center (see Figure V below).

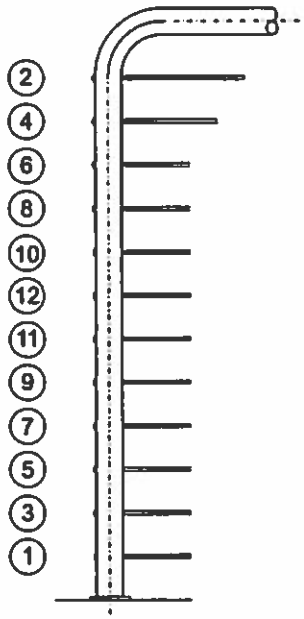

RECOMMENDED TENSIONING SEQUENCE

FIG. V

The Wagner Companies
www.wagnercompanies.com
info@mailwagner.com
1-888-243-6914

Wood Railings—Mounting Alternatives

The following illustrations demonstrate how the hardware can be used on a single corner post. Not all possible hardware combinations are shown. If the hardware and cable run all the way through the post in one direction, you will need to use a hanger bolt end or hardware that is mounted to a lag for the perpendicular direction.

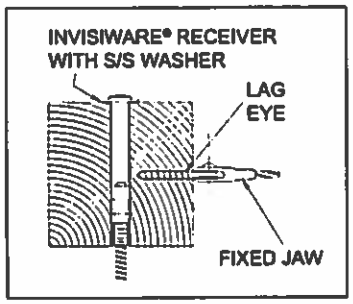

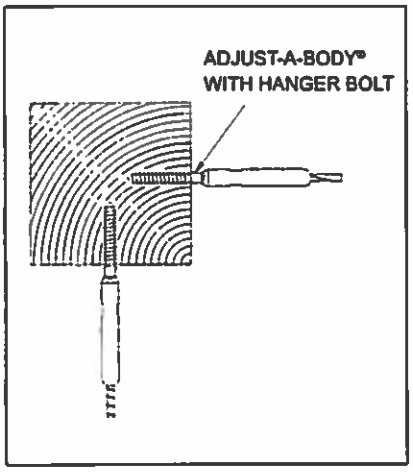

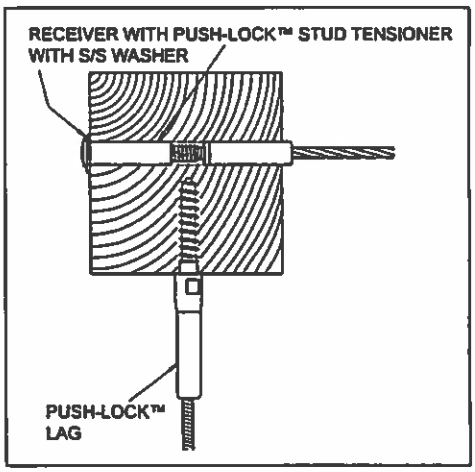

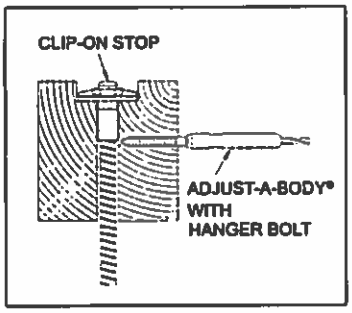

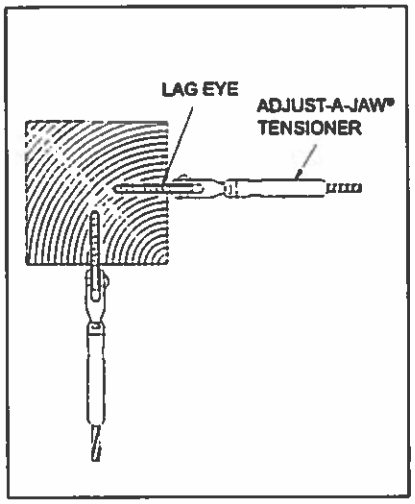

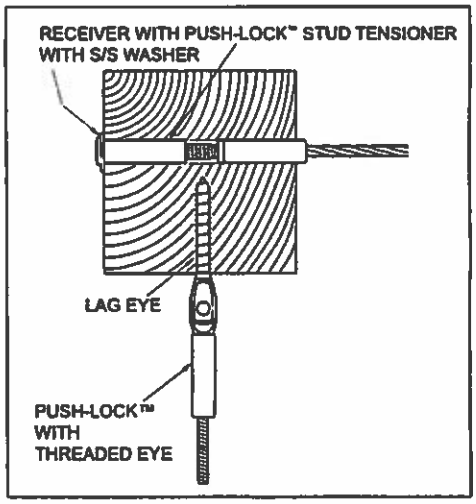

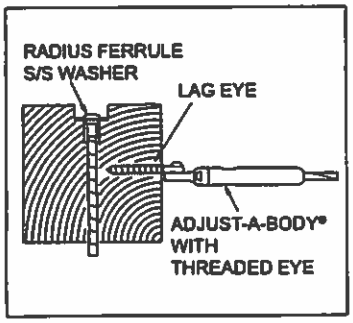

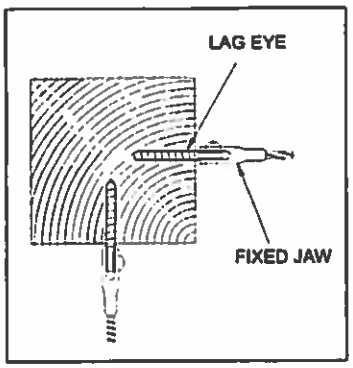

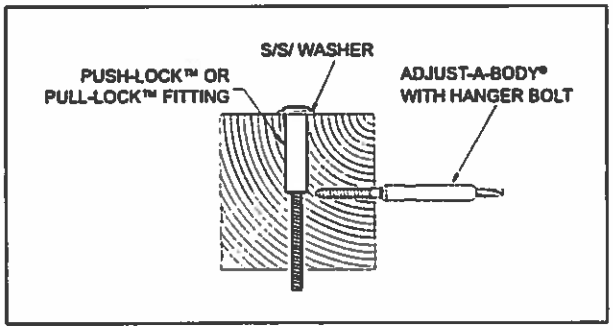

IG-15
3/1/12

The Wagner Companies
www.wagnercompanies.com
info@mailwagner.com
1-888-243-6914

Drilling Holes in End Posts for Cable Mounting Hardware

Where hardware that requires mounting with lag fittings is being used, drill holes in the end posts using the drill size shown on the following chart and screw lags into the holes. The Fixed Jaws, Adjust-A-Jaw * and Adjust-a-Body * with Threaded Eye tensioners, or Push-Lock™ Lags and Push-Lock™ with Threaded Eyes will be mounted to the lags.

CABLE SIZE	USING LAG PART NO.	USE DRILL SIZE*
1/8"	LE-6, PL-L4	17/64"
3/16"		
1/4"	LE-8	3/8"

Where Adjust-A-Body * with Hanger Bolt Tensioners are being used , drill holes in the end posts using the drill size shown on the following chart and screw the Hanger Bolt into the holes. The body of the fitting will be mounted to the Hanger Bolt (see "Installing Cable," pages IG-4 through IG-14).

CABLE SIZE	USING ADJUST-A-BODY® PART NO.	USE DRILL SIZE*
1/8"	A-JB6 A-JB6-L	15/64"
3/16"		
1/4"	A-JB8	11/32"

* Due to the differences in different types of woods, slightly smaller or larger holes may be required for your particular application.

Drilling Holes in Intermediate Posts and Cable Braces

Cable Size	Hole Diameter Where Studs/Ferrules are Swaged in the Field or Swageless Fittings are Put on the Cables	Hole Diameter Using Push-Lock™ or Pull-Lock™ Fittings	Hole Diameter Where Cables Supplied by Factory with Fittings Swaged on Both Ends of Cable	
			Using Threaded Studs	Using Ferrules for Clip-on Fixed Jaws or Using Clip-on Stop
1/8"	5/32"	5/32"	11/32"	17/64"
3/16"	7/32"	NA	11/32"	17/64"
1/4"	9/32"	NA	15/32"	25/64"

The Wagner Companies
www.wagnercompanies.com
info@mailwagner.com
1-888-243-6914

Wood Railings—Mounting Alternatives (Continued)

Options for mounting hardware in wood posts. Drill your holes using sizes shown in the chart below.

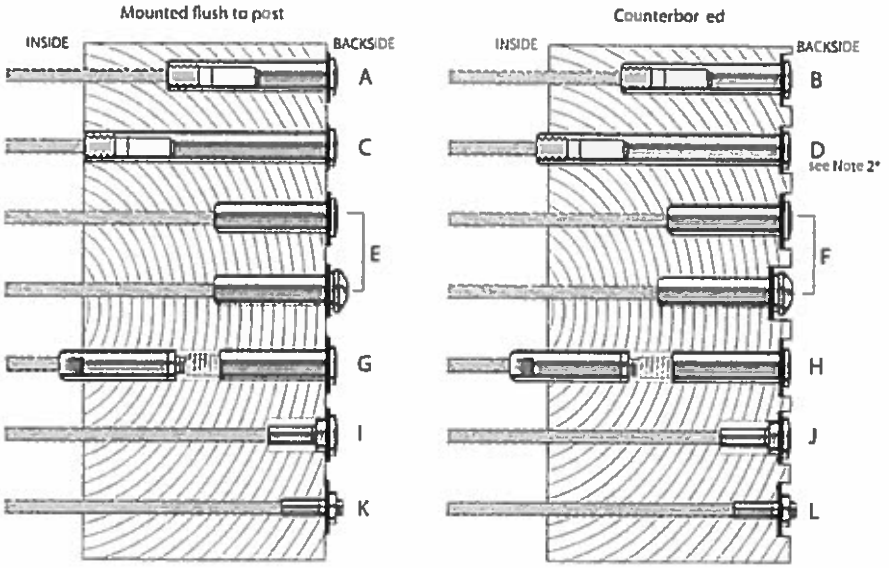

Mounting Option	Cable Dia.	Drill-through Hole for Cable, Threaded Stud, or Clip-on Stop	Drill Hole for Fitting (Receiver/Radius Ferrule Push-Lock™, or Pull-Lock™ see Note 1*)	Use 5/5 S.A.E. Flat Washer	Counterbor Min. Dia.Hole for S.A.E. Flat Washer or Clip-on Stop Washer
A & B Invisiwar e* Receiver under 3.5" long	1/8"	11/32"	29/64"	7/16"	15/16"
	3/16"				
	1/4"	15/32"	15/32"	1/2"	1-3/32"
C & D Invisiwar e* Receiver 3.5" long (Part No. R-6-62)	1/8"	N.A.	29/64" see Note 2*	7/16"	15/16" see Note 2*
	3/16"				
E & F Push-Lock™ or Pull-Lock™ Fitting	1/8"	5/32"	29/64"	7/16"	15/16"
	3/16"				
G & H Receiver with Push-Lock™ Stud	1/8"	5/32"	29/64"	7/16"	15/16"
	3/16"				
I & J Radius Ferrule	1/8"	5/32"	29/64"	7/16"	15/16"
	3/16"	7/32"			
	1/4"	9/32"	35/64"	1/2"	1-3/32"
K & L Clip-on Stop	1/8"	17/64"	N.A.	N.A.	15/16"
	3/16"				

*Note 1: Hole depth will depend upon the mounting option you choose and the length of the part you are using.

*Note 2: If you are mounting a 3-1/2" long Invisiware * Receiver (part no. R-6-62) in a standard 4x4 (3-1/2" x 3-1/2") post, you: 1) will drill your hole clear through the post, and 2) should NOT counterbore the hole if the cable run is on a severe pitch or stairway. If your end post is thicker than 3-1/2", then drill your holes using Mounting Options A & B.

IG-17
3/1/12

The Wagner Companies
www.wagnercompanies.com
info@mailwagner.com
1-888-243-6914

MEASURING AND INSTALLING CABLE

Vertical Railings

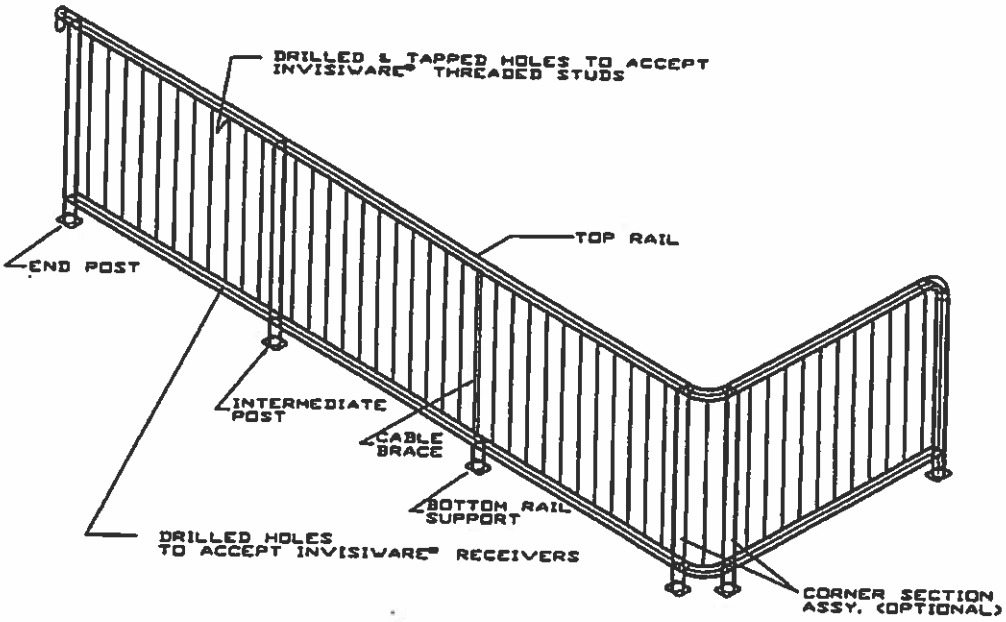

If you have ordered your cables cut to length from the factory, you can skip the steps indicated with * on measuring cable length and swaging fittings onto cable.

A. *Measure the distance between the bottom of the top rail to the top of the bottom rail and add 2.187" (2-3/16").

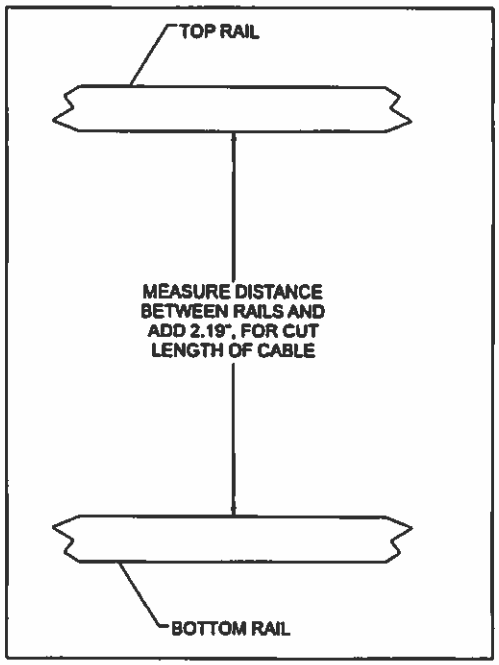

IG-18
3/1/12

The Wagner Companies
www.wagnercompanies.com
info@mailwagner.com
1-888-243-6914

Measuring And Installing Cable—Vertical Railings (Continued)

B. *Measure out the cable on a relatively clean surface (see Figure C below). A lawn or swept concrete surface would be fine. Cut cable to the length determined in Step A on page IG-18, using cable cutter.

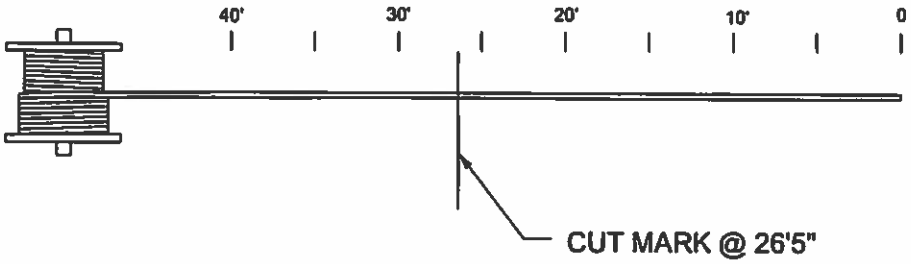

FIG. C

NOTE: Make sure you have a positive holding device at the zero end. Cutting the cables takes very little time. It is best to have one person stand at the zero mark while the other operates the cable cutter at the cut mark.

C. *Swage a Stud onto each end of the cable (see "Swaging Instructions," pages IG-20 to IG-23).

D. Screw the swaged Stud on one end of the cable into the threads in the top rail, until the threads on the Stud are not showing.

E. Slide the washer over the body of the Invisiware ® Receiver, then feed the Receiver through the hole in the bottom of the bottom rail. Screw the Receiver onto the threaded Stud.

F. Repeat above steps for each cable to be installed between posts.

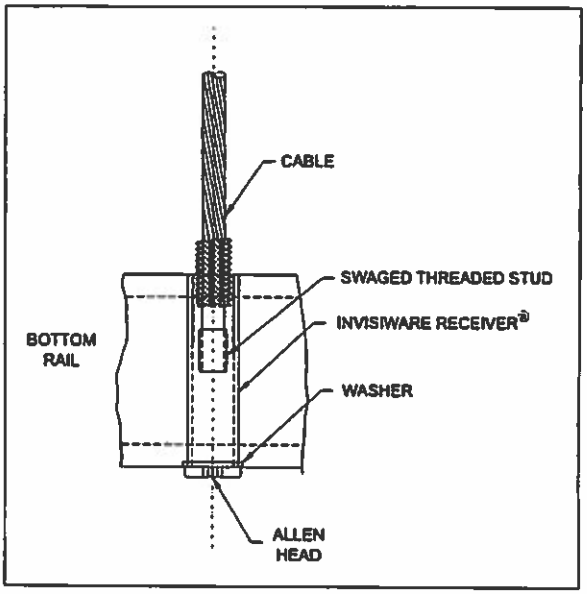

G. Tension the cables (to approximately 400 lbs.) by holding the cable (using cable gripping pliers) closely above the Stud in the bottom rail. Turn the Receiver clockwise with an Allen wrench from underneath the bottom rail. First, tension the outside cables for each section between posts/and or cable braces. Then, tension the rest of the cables in sequence, by alternating from one end to the other, working toward the center away from the posts/braces. Tension each section this way. (Since vertical railing is braced differently than horizontal railing, the installation sequence is less critical. It can be installed from the post/braces in , from the center out, section by section, or over the whole span of the railing.)

The Wagner Companies
www.wagnercompanies.com
info@mailwagner.com
1-888-243-6914

SWAGING INSTRUCTIONS

Before you begin swaging

NOTE: If you are using coated cable, be sure to strip the coating from the end of the cable before swaging.

If you are using the Adjust-A-Jaw ® or Adjust-A-Body ® type tensioner or Ultra-tec ® Fixed Jaw fitting, make sure the cable has been inserted through the body of the fitting prior to swaging the ferrule onto the cable. See illustrations below.

Adjust-A-Jaw ® or Adjust-A-Body ® Tensioner

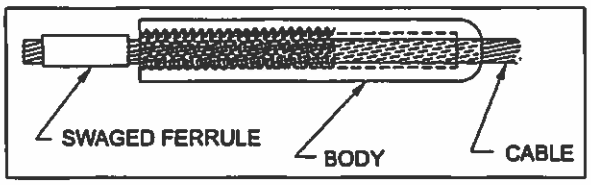

Ultra-tec ® Fixed Jaw

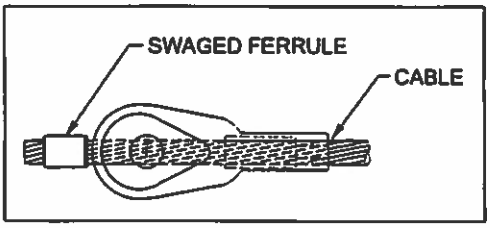

If you are using the Invisiware ® Receiver or Welded Receiver (threaded receiver inside post), the Stud will be swaged onto the end of the cable and will install directly into the fitting.

If you are using the Invisiware ® Radius Ferrule or Clip-on Stop, the fitting will be swaged onto the end of the cable and no further operation will be required.

NOTE: Swage the fitting on one end of the cable only, before stringing cables through posts and braces. Where only one end of the cable has an adjusting fitting (Invisiware ® Receiver or Adjust-A-Jaw ® or Adjust-A-Body ® type tensioner), we recommend that you swage the unadjusting end first and the adjusting end last (after the cables have been strung).

Swaging

IMPORTANT: NEVER CUT OR OTHERWISE TAMPER WITH ANY SWAGED FITTING.

A. If you are using any fittings other than Radius Ferrules or Clip-on Stops, position the Ferrule or (threaded) Stud onto the Cable as shown in Figure D below.

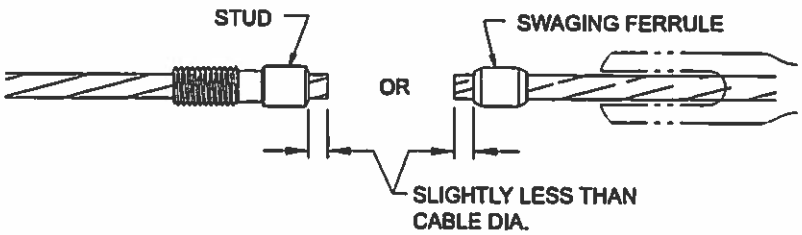

FIG. D

IG-20
3/1/12

The Wagner Companies
www.wagnercompanies.com
info@mailwagner.com
1-888-243-6914

Swaging (Continued)

If you are using Radius Ferrules or Clip-on Stops, slide the Cable into the open end of the fitting until it stops (see Figures E and I below).

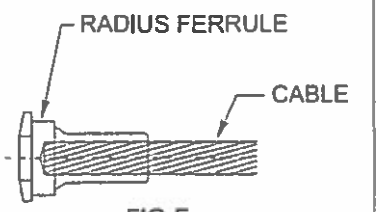

FIG. E

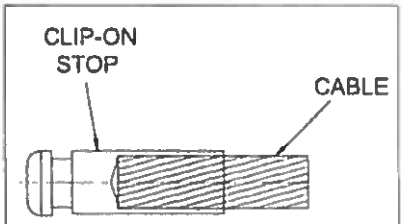

FIG. I

B. Place Ferrule, Radius Ferrule, or Stud into open Swager dies.

Use the Ultra-tec ® Model 610 Portable Swager for 1/8" and 3/16" diameter cable with S-4 and S-6 Studs, RF-4 and RF-6 Radius Ferrules, and F-4 & F-6 Ferrules. Use the Ultra-tec ® Model 650 Portable Swager for all sizes of cable.

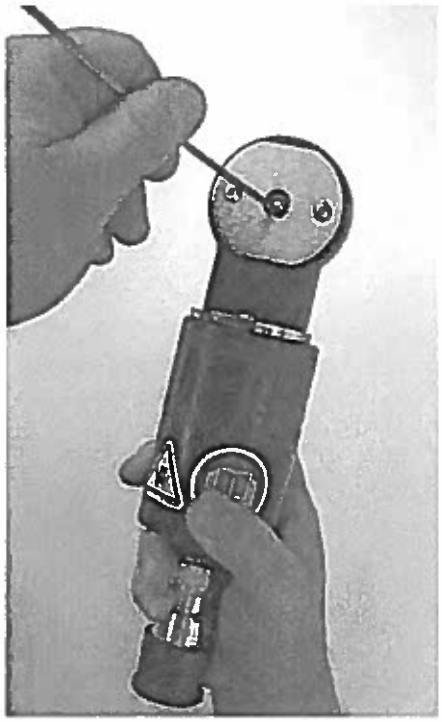
610 Portable Swager for use with 1/8" and 3/16" diameter cable.

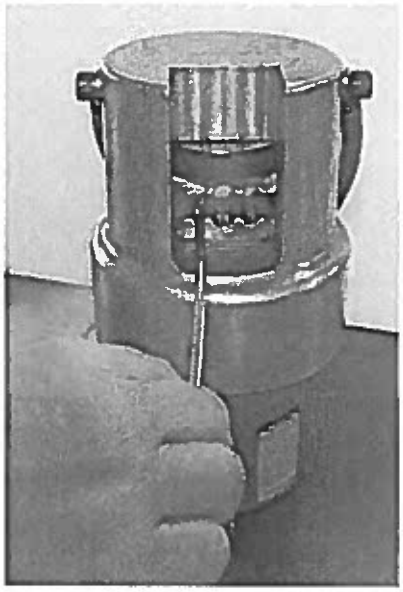
650 Portable Swager for use with all sizes of cable.

The Wagner Companies
www.wagnercompanies.com
info@mailwagner.com
1-888-243-6914

Swaging (Continued)

Make sure the die size you use in the swager is the one marked for the diameter of the cable onto which the fitting is being swaged .

For Ferrules

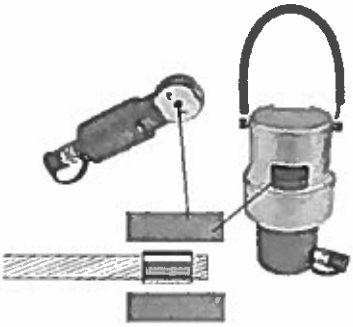

For Radius Ferrules

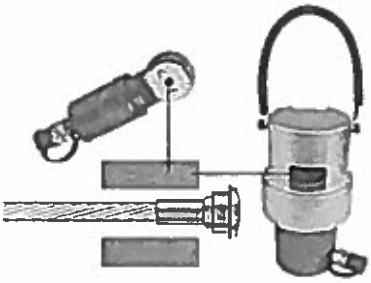

For Studs

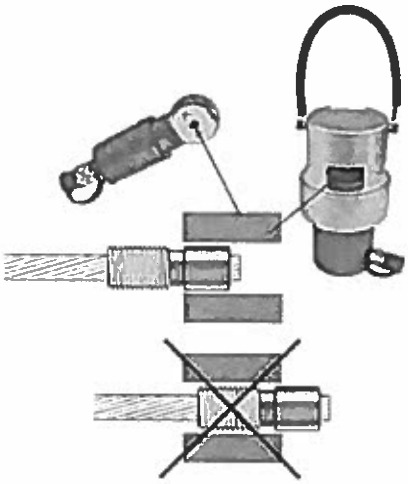

When swaging the threaded stud, make sure the threads are not in the swager.

C. Depress the foot pedal to introduce pressure into the swaging tool. Do not let the dies close all the way on the first cycle.

D. Release the foot pedal and apply foot pressure in the opposite direction (this will re-open the dies). Turn the fitting 45 degrees and repeat Step C. Do not let the die close all the way.

E. Turning the fitting 45 degrees each time, swage the fitting, letting the die close completely 4 to 8 more times.

NOTE: When swaging a Stud, the non-threaded end of the Stud should face the end of the cable. When properly swaged, the Ferrule will look like Figure H and the Stud will look like Figure J below after swaging and will slide easily into the body of the fitting.

Ferrule

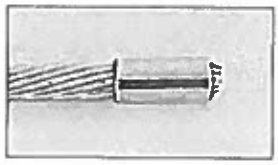

FIG. H

Stud

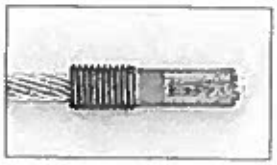

FIG. J

The Wagner Companies
www.wagnercompanies.com
info@mailwagner.com
1-888-243-6914

Swaging (Continued)

For the Radius Ferrule or Clip-on Stop, use the appropriate "GO" gauge. The swaged Radius Ferrule should fit the slot in the "GO" gauge when properly swaged. If you do not have a "GO" gauge, use calipers to check diameter of the swaged portion of the Radius Ferrule. See the chart below for the correct diameter of the Radius Ferrule after it has been swaged.

Radius Ferrule	Clip-on Stop	For Cable Diameter	Dia. of Swaged Portion of Fitting Should Be
RF-4 or RF-6	COS-4 or COS-6	1/8" or 3/16"	.250" Max.
RF-8	N.A.	1/4"	.375" Max.
RF-10 or RF-12	N.A.	5/16" or 3/8"	.500" Max.

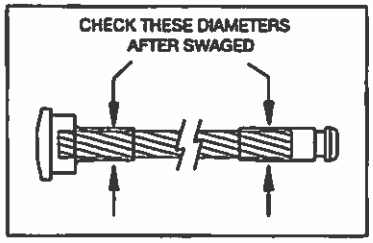

U ltra-tec ® " Clip-on " Fixed Jaw Installation Instructions

1. Slide Swaged Cable Ferrule end through throat of Fixed Jaw.

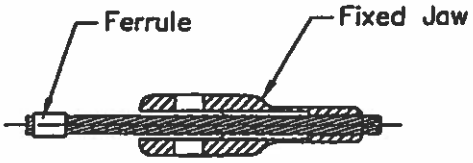

2. Grasp top of Clip with pliers, and force clip over cable immediately behind Ferrule.

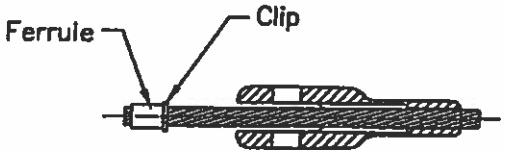

3. Pull cable back through throat of Fixed Jaw until it stops. Ferrule is captured inside Fixed Jaw.

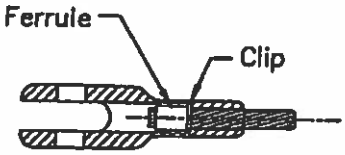

IG-23
3/1/12

The Wagner Companies
www.wagnercompanies.com
info@mailwagner.com
1-888-243-6914

Using Invisiware ® Receivers on Stairways

The following instructions illustrate how you can use an Invisiware ® Receiver and Stud on stairway end posts, without having to drill holes on an angle.

Section A. This section applies if you are installing Invisiware ® Receivers on both ends of your cable run. If the cables are supplied with studs on each end, you can disregard steps 1, 4 and 5 below.

1. Swage the stud onto the end of the cable to be installed at the bottom of the stairway. See the "Swaging Instructions" on pages IG-21 to IG-24.

2. Grip the cable with cable grip locking pliers approximately 1/8" from the swaged stud. Screw the Receiver onto the stud for leverage, and bend the cable by hand to the approximate angle desired. This bend does not have to be precise.

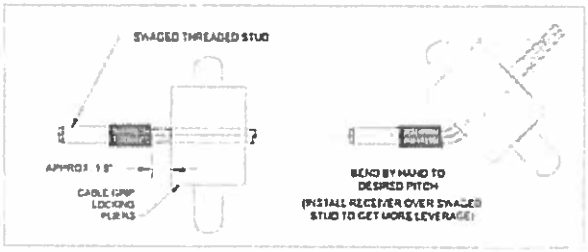

3. Install the Receiver in the post at the bottom of the stairway, following the instructions in the "Installing Cable" section for installing Invisiware ® Receiver at Post A. Make sure the stud is flush with the outside wall of the post. See illustration at right.

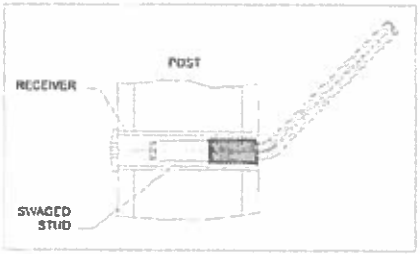

4. Pull the cable to the hole in the post at the top of the stairway where the Receiver will be installed on the other end of the cable. Mark the cable at the center point of the hole. See illustration at right.

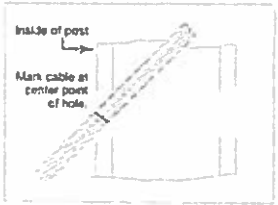

5. Swage the Stud onto the end of the cable with the threaded end at the mark made in Step 4. See "Swaging Instructions" on pages IG-21 to IG-24, and the illustration at right. Cut off any excess cable, leaving a small "tail" out of the end of the Stud.

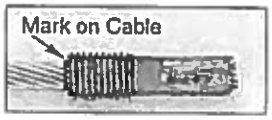

6. Bend the cable to the approximate angle desired as done in Step 2 above. Make sure bends are on the same plane.

7. Install the Receiver in the post at the top of the stairway, following the instructions in the "Installing Cable" section of this Installation Guide for installing Invisiware ® Receivers at Post B. When tensioned, the cables will self-align at each end post.

The Wagner Companies
www.wagnercompanies.com
info@mailwagner.com
1-888-243-6914

Section B. This section applies if you are installing Invisiware ® Receivers on one end and another type of fitting on the other end of your cable run. If the cables are supplied with studs on the Invisiware ® Receiver ends, then you can disregard steps 2 and 3 below.

1. Install the fitting on the non-Receiver end of the run first. See the instructions for that fitting in the "Installing Cable" on pages IG-4 to IG-14.

2. Pull the cable to the hole in the post at the Receiver end of the run. Mark the cable at the center point of the hole. See illustration at right.

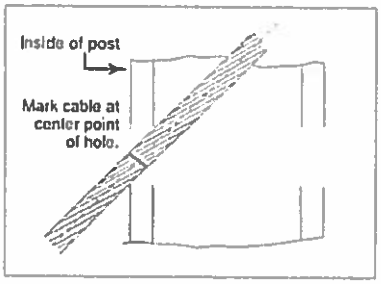

3. Swage the Stud ® onto the end of the cable with the threaded end at the mark made in Step 2. See "Swaging Instructions" on pages IG-21 to IG-24, and the illustration at right. Cut off any excess cable, leaving a small "tail" out of the end of the stud.

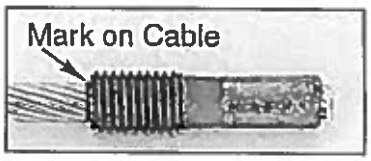

4. Grip the cable with cable grip locking pliers approximately 1/8" from the swaged stud. Screw the Receiver onto the stud for leverage, and bend the cable by hand to the approximate angle desired. This bend does not have to be precise.

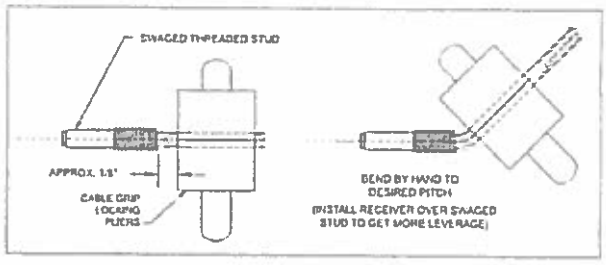

5. Install the Receiver ® in the post, following the instructions for installing Invisiware ® Receivers at Post B in the "Installing Cable" on pages IG-4 to IG-14. When tensioned, the cables will self-align with the fitting at the other end of the cable run.

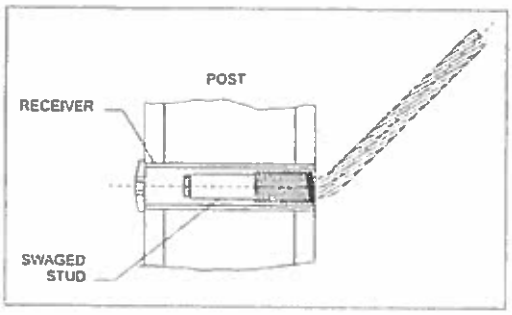

The Wagner Companies
www.wagnercompanies.com
info@mailwagner.com
1-888-243-6914

Ultra-tec • "Clip-on" Stop Installation Instructions

Feed cables through intermediate posts and install "Clip-on" Stop first, before installing tensioning end of cable.

1. Drill 17/64" (.266") hole all the way through the post.

2. If you wish to countersink the Stop in a wood post, then drill a 15/16" (.938") hole to a depth of 3/16" in the back side of the post.

   If you are using steel pipe, see Fabrication Instructions. There should be a 17/32" (.531") hole counterbored to a .100" depth, so the full diameter of the washer will rest on a flat surface in the pipe.

3. From the inside side of the post, slide the cable through the hole, Stop end first, and out the back side of the post.

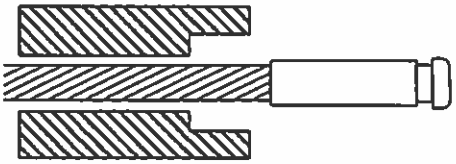

4. Slide the washer over body of the Stop.

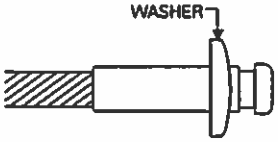

5. Force the Clip into the slot in the Stop, and press it in by hand. Press Clip with pliers to secure it in slot.

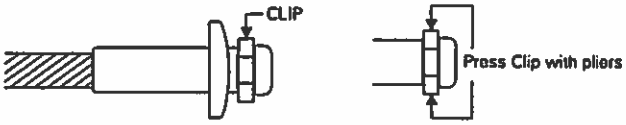

6. Pull cable back through the hole, until the washer stops against the post, with the Clip resting in the recess of the washer.

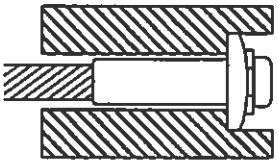

7. Install the hardware on the post at the tensioning end of the cable.

IG-26
3/1/12

The Wagner Companies
www.wagnercompanies.com
info@mailwagner.com
1-888-243-6914

Push-Lock™ Fittings
Installation Instructions

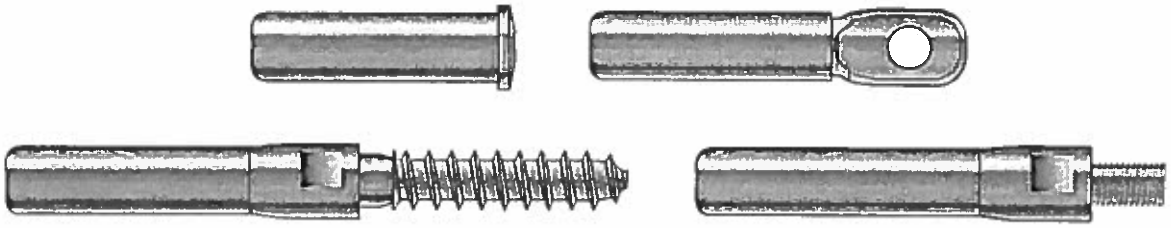

Install tensioning end of run to one end post and run cables through intermediate posts, before installing Push-Lock™ fitting.

1. Make sure the holes are drilled properly in the end post where you will be installing the Push-Lock™ fitting.

   If you are installing the Push-Lock™ fittings in a metal railing, see Metal Railings/Hardware Mounting Holes/ Boring Guide for boring instructions for your end post.

   If you are using wood end posts, see "Wood Railings-Mounting Alternatives" on pages IG-16 and IG-17 for hole sizes and depths.

2. Slip the washer over the body of the fitting (7/16 SAE washer for wood posts, black Delrin* washer for metal posts), then slide the Push-Lock™ fitting into the hole in your end post with the hole in the fitting facing the inside (cable side) of the post.

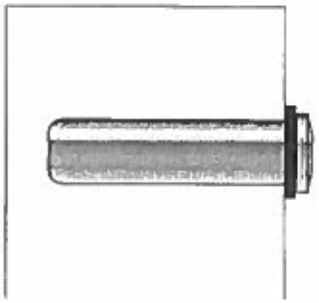

2A. If you are using the Push-Lock™ with Threaded Eye, attach the threaded tab or lag eye to the end post and connect the Push-Lock with Threaded Eye with a screw.

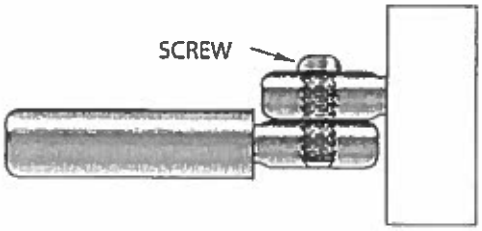

IG-27
3/1/12

The Wagner Companies
www.wagnercompanies.com
info@mailwagner.com
1-888-243-6914

2B. If you are using a Push-Lock™ Lag, use a hex wrench to install the lag section of the fitting into your pre-drilled hole.

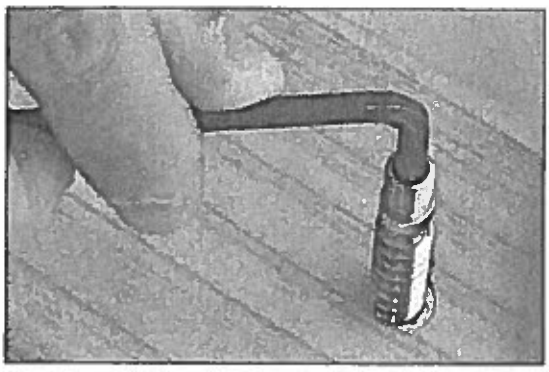

Then thread the Push-Lock™ coupler onto the lag.

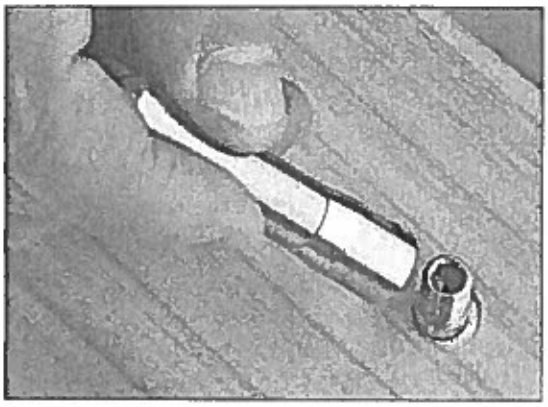

Make sure the post side of the Push-Lock™ Lag is flush against the post.

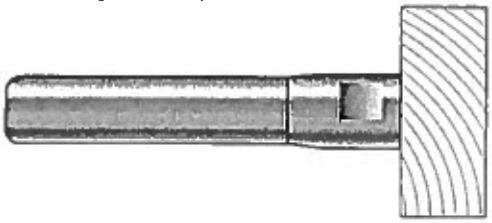

2C. If you are using a Push-Lock Threaded Bolt, hand-turn the fitting into your post hole pre-drilled and tapped to 5/16-24.

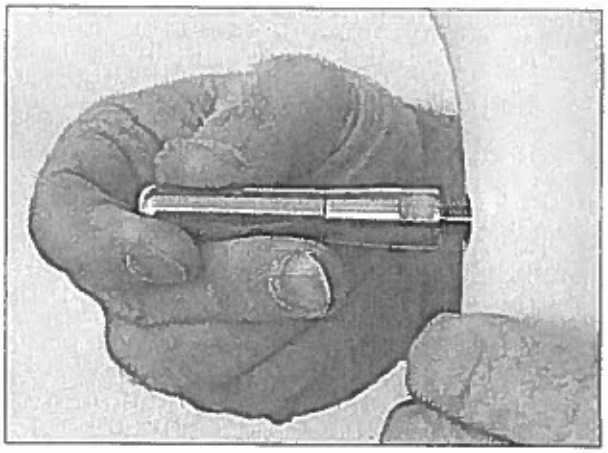

Then tighten with a 7/16" (or crescent) wrench.

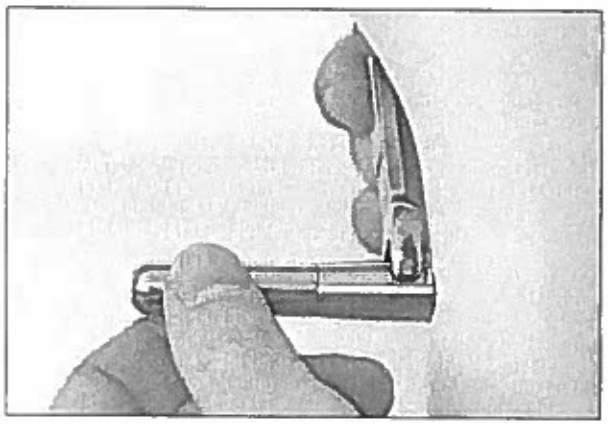

Make sure the post side of the Push-Lock™ Threaded Bolt is flush against the post.

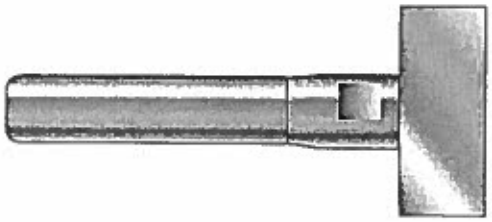

The Wagner Companies
www.wagnercompanies.com
info@mailwagner.com
1-888-243-6914

Push-Lock Fittings (Continued)

3. Pull the cable tight and mark the cable at a point 3/8" from the backside of the post or 1-3/16" from the end of the fitting opposite the eye/lag. Cut the cable at the mark, using a cable cutter.

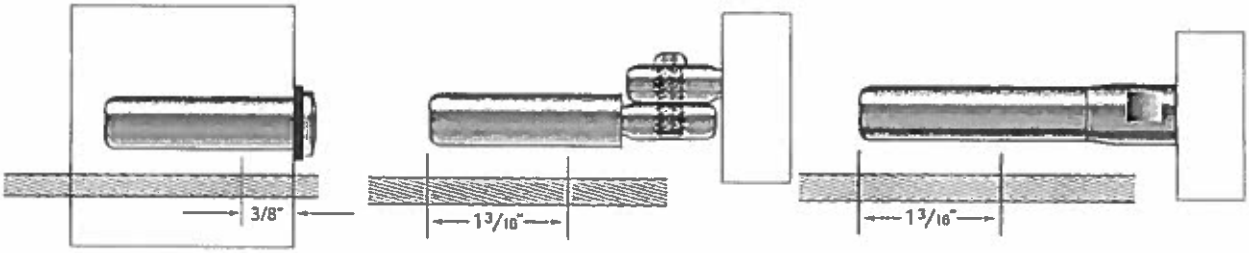

4. Push the cable into the hole in the fitting as far as it will go (approximately 1-1/16"). Twist the cable in the right-hand direction as you push it into the fitting. You will feel it slide through the jaws inside the stud. (If applicable, you will receive a PL-Key with your order. This may aid in your cable installation. Please see instructions for use of the PL-Key at the end of this section).

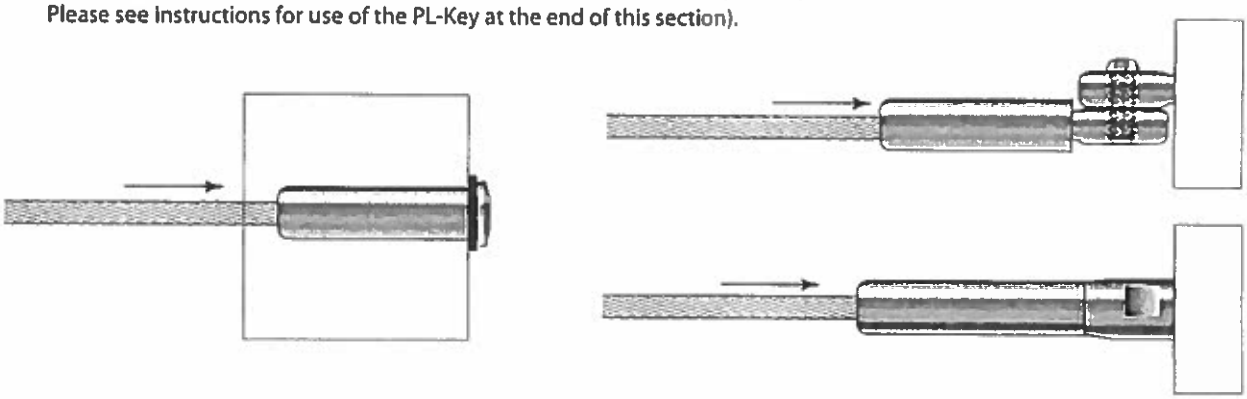

5. Pull cable to set gripping action of the Push-Lock™ fitting.

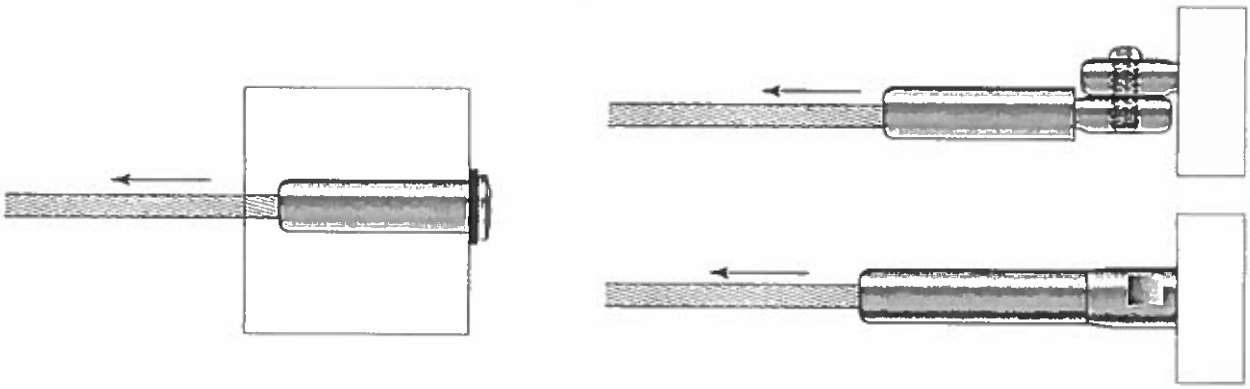

6. Tension the cable with the tensioner installed at the other end of the cable.

The Wagner Companies
www.wagnercompanies.com
info@mailwagner.com
1-888-243-6914

Pull-Lock™ Stop-End (non-tensioning) Fittings
Installation Instructions

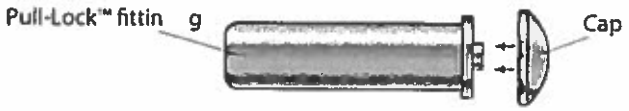

Make sure the holes are drilled properly in the posts where you will be installing your fittings.
If you are installing the fittings in a metal railing , see Metal Railings/Hardware Mounting Holes/Boring Guide for boring instructions.
If you are using wood end posts, see "Wood Railings-Mounting Alternatives" section in this guide (pages IG-16 and IG-17) for hole sizes.

For wood, first drill a pilot hole through the post that is 1/16" larger than the diameter of the cable you are using. (It is best to drill the pilot hole from one side about half-way through the post and then drill from the other side to complete the hole.) Then drill a 1/2" hole from the back side of the post at least 1-5/8" deep (deeper if you are counterboring for the over-sized washer).

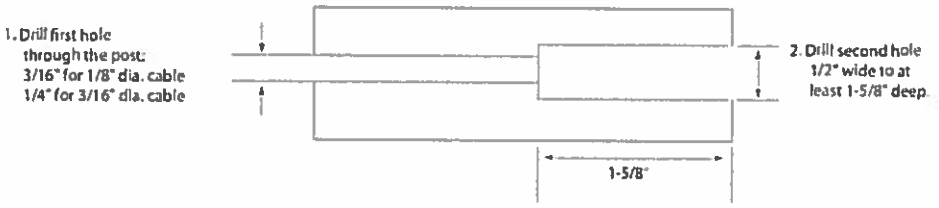

1. Following the instructions elsewhere in this guide for the tensioning device you will be installing on one end of the cable run, install the tensioning device to your end post on one end of the cable run first (Post A below).

2. Run the cable through the intermediate posts (if any) and through Post B where you will be installing the Pull-Lock™ fittings.

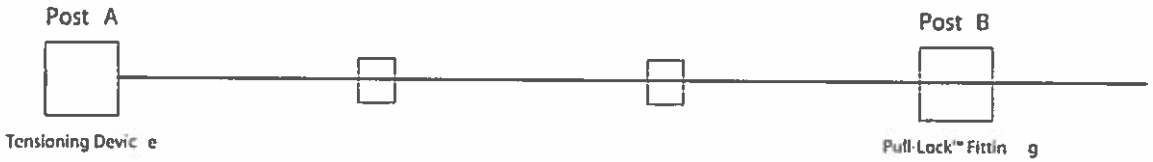

3. Cut the cable with a cable cutter, leaving enough cable extending out from the back side of the post to be able to grasp the cable firmly with your hand (6" or more).

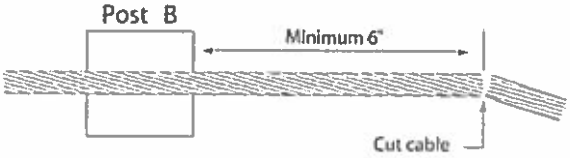

IG-30
3/1/12

The Wagner Companies
www.wagnercompanies.com
info@mailwagner.com
1-888-243-6914

Pull-Lock Stop-End Fittings (Continued)

4. Slip the washer over the body of the Pull-Lock™ fitting (7/16SAE washer for wood posts, black Delrin® washer for metal posts).

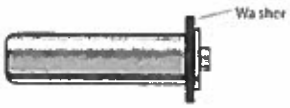

5. Push the cable into the hole in the front of the Pull-Lock™ fitting and pull the cable through the fitting. Twist the cable in the right-hand direction as you push it into the fitting. Then slide the fitting along the cable and up to the back side of the post. (If applicable, you will receive a PL-Key with your order. This may aid in your cable installation. Please see instructions for use of the PL-Key at the end of this section).

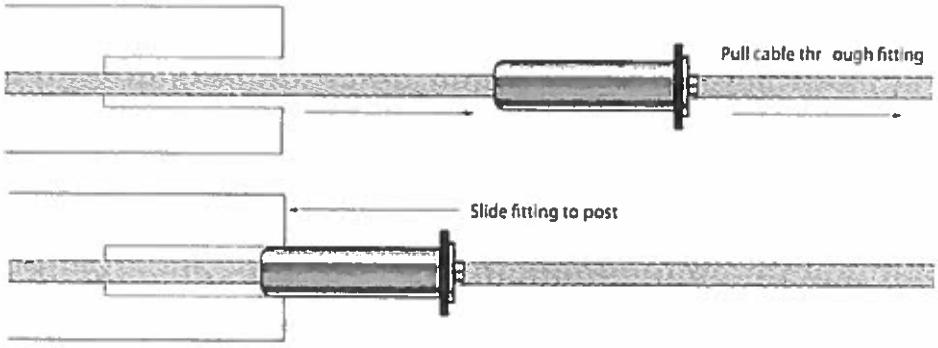

6. Hold the cable with one hand and slide the Pull-Lock™ fitting into the hole in the post. Press on the back of the Pull-Lock™ fitting to hold it securely in the post and pull the cable through the fitting until it is as tight as you can make it.

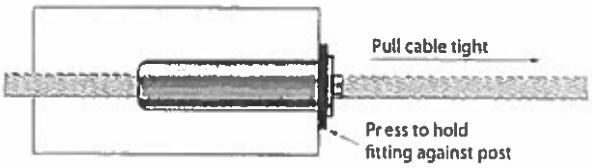

7. Cut the cable flush with the hole in the back of the Pull-Lock™ fitting, using a cut-off wheel (see CUT-OFF KIT in our product catalog).

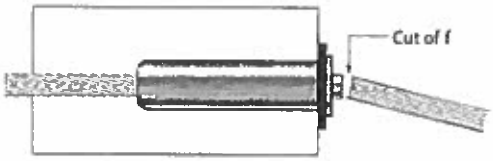

8. Pull the cable to set the gripping action of the Pull-Lock™ fitting.

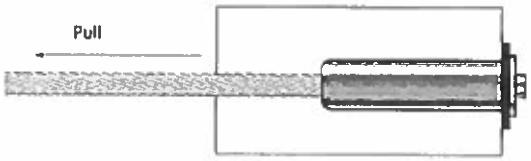

9. Press the cap onto the lip of the Pull-Lock™ fitting.

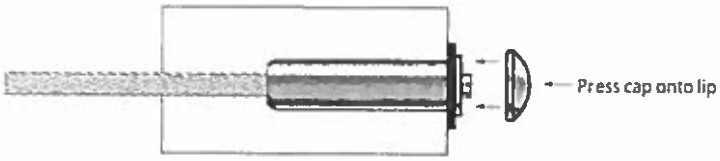

10. Tension the cable with the tensioner installed on the end post (Post A) at the other end of the cable run, after all the fittings have been installed in both end posts.

IG-31
3/1/12

The Wagner Companies
www.wagnercompanies.com
info@mailwagner.com
1-888-243-6914

Receiver with Push-Lock™ Stud Installation Instructions

Make sure the holes are drilled properly in the posts where you will be installing your fittings.
If you are installing the fittings in a metal railing , see Metal Railings/Hardware Mounting Holes/Boring Guide for boring instructions.
If you are using wood end posts, see "Wood Railings-Mounting Alternatives" section in this guide (pages IG-16 and IG-17) for hole sizes.

For wood posts, drill a ½" hole through the post. (It's best to drill about half-way from one side, then drill from the other side to complete the hole. You may want to drill a pilot hole with a smaller bit first.)

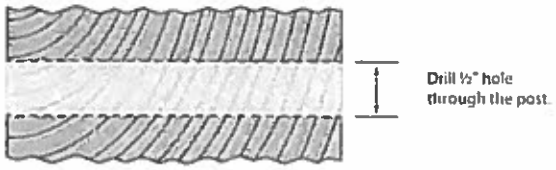

Section A. Instructions in this section apply if you are using a Receiver with Push-Lock™ Stud on one end of your cable run and any device OTHER THAN a Pull-Lock™ fitting on the other end. If you are using a Pull-Lock™ fitting on the other end, see Section B, page IG-35.

Step A. Install other fitting on the first end post (Post A below).

1. Install the fitting you will be using in the end post opposite the end in which you will be installing the Receiver with Push-Lock™ Studs first (Post A).

If you will be using another Receiver with Push-Lock Stud at Post A, see step 1A below.
For all other fittings, follow the instructions for installing that device found in this Installation Guide , and then proceed to Step B on the following page.

1A. If you are installing another Receiver with Push-Lock™ Stud on the other end of your cable run (Post A), install that tensioner in Post A, as follows, before you proceed with step B on next page.

1) Turn the Receiver onto the threads of the Push-Lock™ Stud at least 6 turns.

The Wagner Companies
www.wagnercompanies.com
info@mailwagner.com
1-888-243-6914

Receiver with Push-Lock Stud (Continued)

2) Slip the washer over the body of the Receiver (7/16SAE washer for wood posts, black Delrin washer for metal posts), then slide the Receiver with Push-Lock™ Stud into the hole in your post with the Receiver cap end at the back side of the post.

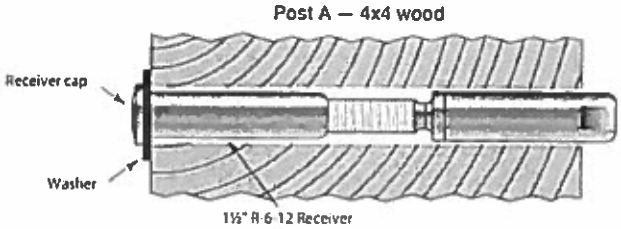

3) Push the cable into the hole in the fitting as far as it will go (approximately 1-1/16"). Twist the cable in the right-hand direction as you push it into the fitting. You will feel it slide through the jaws inside the stud. (If applicable, you will receive a PL-Key with your order. This may aid in your cable installation. Please see instructions for use of the PL-Key at the end of this section).

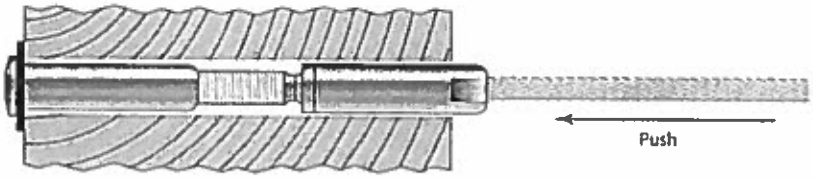

4) Pull the cable to set the gripping action of the Push-Lock™ Stud.

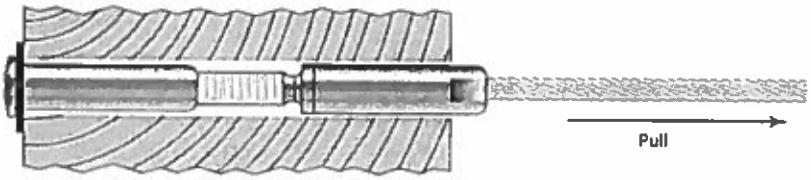

Step B. Install the Receiver with Push-Lock™ Stud on Post B.

1. Run the cable through the intermediate posts (if any) to Post B.

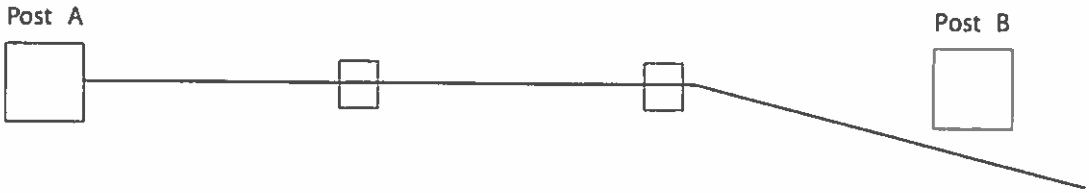

2. Turn the Receiver onto the threads of the Push-Lock™ Stud approximately 6 turns.

3. Slip the Washer over the body of the Receiver (7/16SAE washer for wood posts, black Delrin washer for metal posts), then slide the Receiver with Push-Lock™ Stud into the hole in Post B with the Receiver cap resting against the back side of the post.

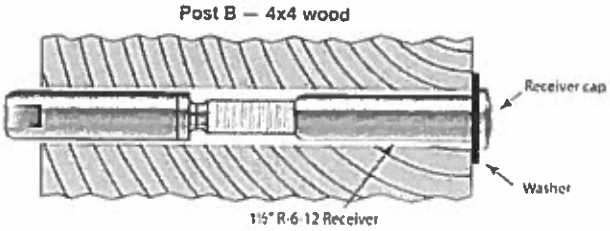

IG-33
3/1/12

The Wagner Companies
www.wagnercompanies.com
info@mailwagner.com
1-888-243-6914

Receiver with Push-Lock Stud (Continued)

4. Pull the cable tight and mark the cable at a point 1-3/16" from the leading edge of the Push-Lock™ Stud. Cut the cable at the mark, using a cable cutter.

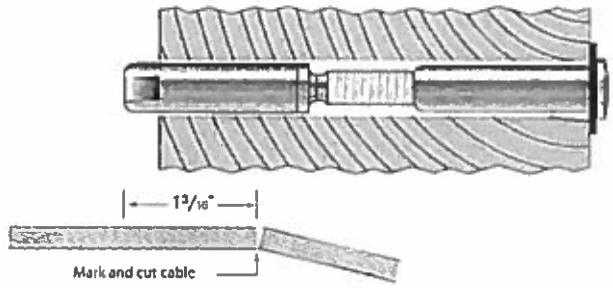

5. Push the cable into the hole in the stud as far as it will go (approximately 1-1/16"). Twist the cable in the right-hand direction as you push it into the fitting. You will feel it slide through the jaws inside the stud. (If applicable, you will receive a PL-Key with your order. This may aid in your cable installation. Please see instructions for use of the PL-Key at the end of this section).

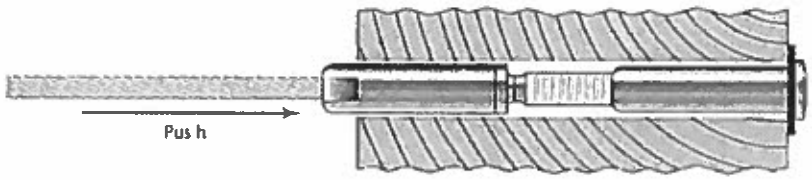

6. Pull the cable to set the gripping action of the Push-Lock™ Stud.

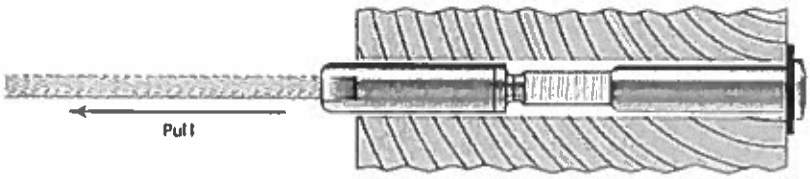

Step C. Tension the cable after all of the fittings have been installed on both end posts.

1. If there is a tensioning device on Post A, tension both ends. Follow the instructions for tensioning the device on Post A found in this guide and the instructions in No. 2 below for tensioning the Receiver with Push-Lock™ Studs in Post B.

   Note: If you are using an Invisiware • Receiver on the other end post A, tension the Receiver by turning it onto the threads of the Swaging Stud at least far enough that none of the threads on the stud are exposed when the cables are tight.

   Note: If you are using Receivers with Push-Lock™ Studs on both ends (Post A and Post B), then follow No. 2 below for tensioning both ends.

2. Tension the cable. Grip the wrench flat on the end of the Push-Lock™ Stud with a 3/8" open-end wrench (to keep the cable from turning), then turn the Receiver with a 3/16" Allen wrench until the cables are tight.

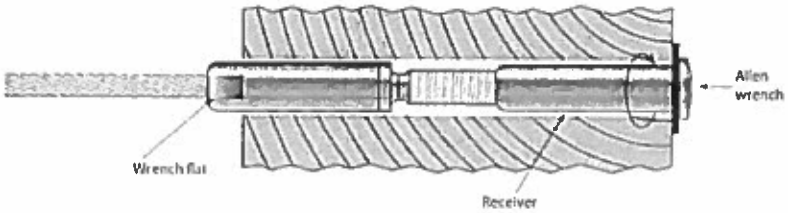

The Wagner Companies
www.wagnercompanies.com
info@mailwagner.com
1-888-243-6914

Receiver with Push-Lock Stud (Continued)

Section B. Instructions in this section apply if you are using a Receiver with Push-Lock™ Stud on one end of your cable run and a Pull-Lock™ fitting on the other end. For all other combinations, see Section A, pages IG-32 to IG-34.

Step A. Install the Receiver with Push-Lock™ Stud in the first end post (Post A below).

1. Turn the Receiver onto the threads of the Push-Lock™ Stud approximately 6 turns.

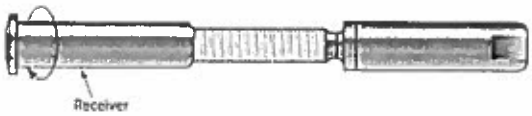

2. Slip the Washer over the body of the Receiver (7/16SAE washer for wood posts, black Delrin ® washer for metal posts), then slide the Receiver with Push-Lock™ Stud into the hole in Post A, with the Receiver cap resting against the back side of the post.

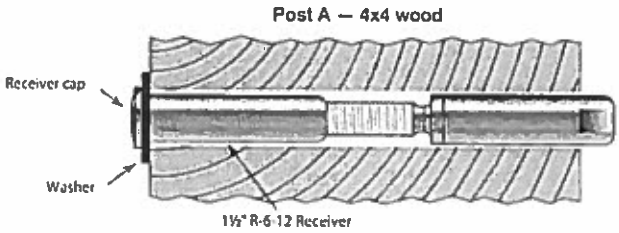

3. Push the cable into the hole in the stud as far as it will go (approximately 1-1/16"). Twist the cable in the right-hand direction as you push it into the fitting. You will feel it slide through the jaws inside the stud. (If applicable, you will receive a PL-Key with your order. This may aid in your cable installation. Please see instructions for use of the PL-Key at the end of this section).

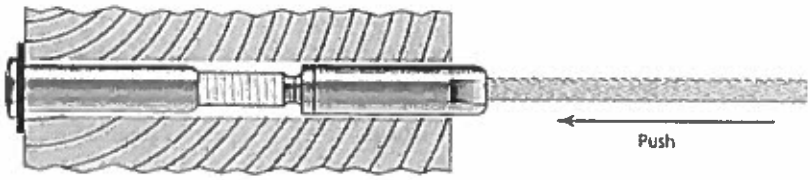

4. Pull the cable to set the gripping action of the Push-Lock™ Stud.

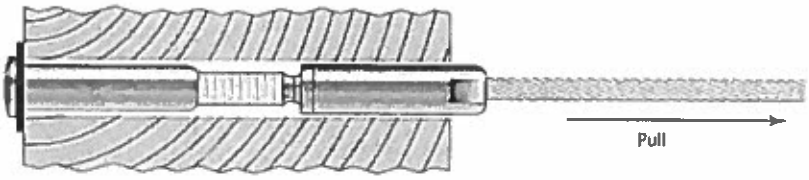

The Wagner Companies
www.wagnercompanies.com
info@mailwagner.com
1-888-243-6914

Receiver with Push-Lock Stud (Continued)

Step B. Install the Pull-Lock™ fitting on Post B.

1. Run the cable through your intermediate posts (if any) and through Post B where you will be installing the Pull-Lock™ fitting.

2. Cut the cable with a cable cutter, leaving enough cable extending out from the back side of the post to be able to grasp the cable firmly with your hand (6" or more).

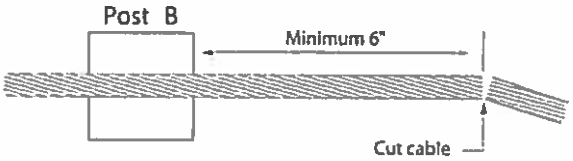

3. Slip the washer over the body of the Pull-Lock™ fitting (7/16SAE washer for wood posts, black Delrin ' washer for metal posts).

4. Push the cable into the hole in the front of the Pull-Lock™ fitting and pull the cable through the fitting. Twist the cable in the right-hand direction as you push it into the fitting. Then slide the fitting along the cable and up to the back side of the post. (If applicable, you will receive a PL-Key with your order. This may aid in your cable installation. Please see instructions for use of the PL-Key at the end of this section).

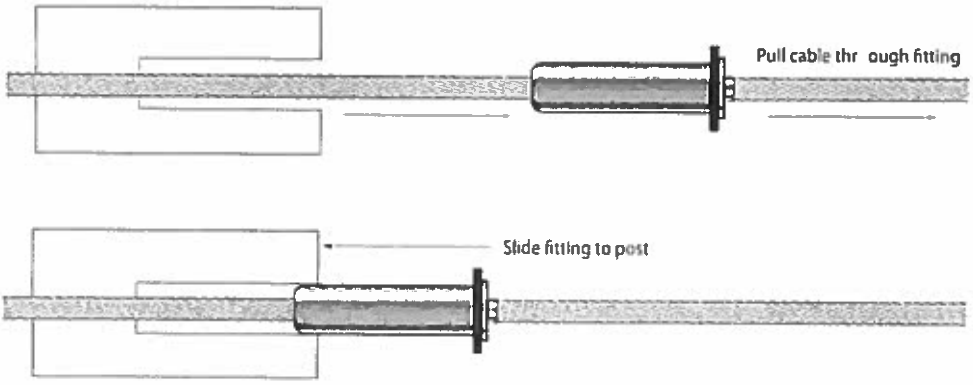

The Wagner Companies
www.wagnercompanies.com
info@mailwagner.com
1-888-243-6914

Receiver with Push-Lock Stud (Continued)

5. Hold the cable with one hand and slide the Pull-Lock™ fitting into the hole in the post. Press on the back of the Pull-Lock™ fitting to hold it securely in the post and pull the cable through the fitting until it is as tight as you can make it.

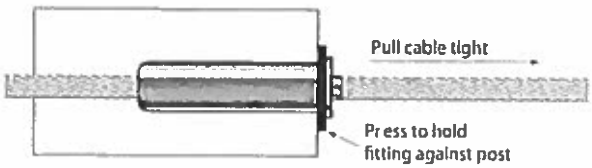

6. Cut the cable flush with the hole in the back of the Pull-Lock™ fitting, using a cut-off wheel (see CUT-OFF KIT in our product catalog).

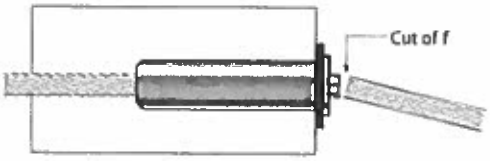

7. Pull the cable to set the gripping action of the Pull-Lock™ fitting.

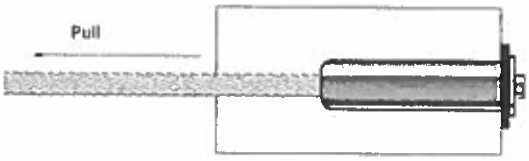

8. Press the cap onto the lip of the Pull-Lock™ fitting.

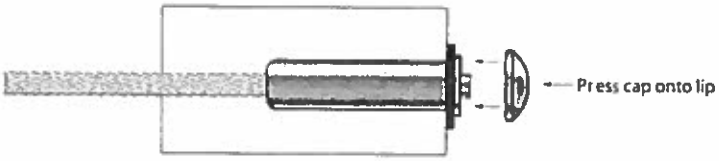

Step C. Tension the cable after all of the fittings have been installed on both end posts.

Grip the wrench flat on the end of the Push-Lock™ Stud at Post A with a 3/8" open-end wrench (to keep the cable from turning), then turn the receiver with a 3/16" Allen wrench until the cables are tight.

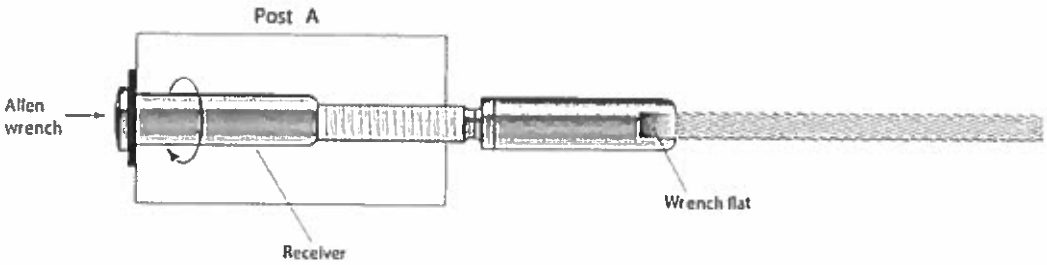

IG-37
3/1/12

The Wagner Companies
www.wagnercompanies.com
info@mailwagner.com
1-888-243-6914

PL-Key Instructions

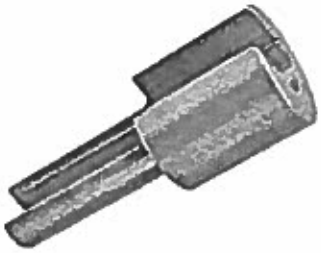

For some Push- and Pull-Locks, a release key is available. The key opens the spring-loaded jaws that grip the cable prior to tensioning.

The PL-Key is primarily used when you want to remove the cable from the Push/Pull-Lock during the installation and cable-trimming process. Because it opens the spring-loaded jaws, it also helps you insert the cable into the Push/Pull-Lock if you're having trouble with that step.

While the PL-Key is very helpful prior to tensioning the cable, it is not effective once the cable has been tensioned. The jaws set into the cable and the push/pull-lock's tamper-resistant design prevents you (or anyone else) from removing the cable at this point. More importantly, even if you are able to remove tensioned cable from the Push/Pull-Lock, the fitting's locking mechanism is spent and cannot be re-used.

1. Slide the groove of the PL-Key along the cable until the cable is completely inside the groove. Carefully insert the PL-Key into the Push/Pull-Lock opening.

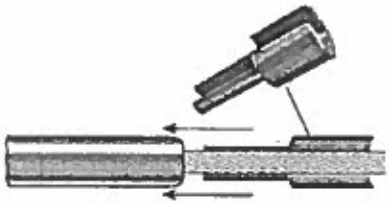

2. Push down until the key bottoms out. You will feel resistance from the spring-loaded jaws as you do so.

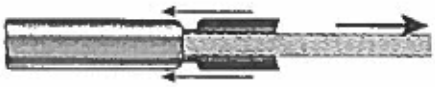

3. Now you may safely remove the cable from the Push/Pull-Lock without damaging the jaw mechanism.

4. Remove the PL-Key and the jaws will reset to their original position, ready to accept and grip the cable again.

IG-38
3/1/12

The Wagner Companies
www.wagnercompanies.com
info@mailwagner.com
1-888-243-6914

WAGNER
ARCHITECTURAL SYSTEMS

Wagner Lumenrail® Ledpod

INSTALLATION AND WIRING INSTRUCTIONS:

1. Installation must be performed by a licensed electrician and all wiring must conform to local electrical code. Read all instructions before beginning installation. Contact R&B Wagner, Inc. with any questions at 888-243-6914 or systems@mailwagner.com.

2. Turn off the power before terminating the Driver or fixtures. Never perform electrical work on a live circuit.

3. Ensure all Ledpod holes are de-bured inside and out.

4. Install 24 VDC positive (+) and negative (-) wires down hand rail (fig. 1). Refer to driver spec sheet for wire gauge recommendations.

5. Pull a loop of the 24 VDC wires out of the 25mm Ledpod hole (fig. 2).

6. Install the retaining spring (fig. 3).

7. Install the Scotchlocs to the 24 VDC main wires and the step down transformer (fig. 4). Ensure that the polarity of wires from the step-down transformer (+ = red, - = black) connect to the correct polarity main 24 VDC wires.

8. Carefully push wires, Scotchlocs, and step down transformer into the hole (fig. 5).

9. Plug the Ledpod into the step-down transformer.

10. Carefully push the remaining wire into the hole. Push the Ledpod into the hole. The witness mark on the Ledpod should be pointed towards the pathway. If the Ledpod does not push in, remove and check spring alignment (fig. 6).

11. Mount driver in a suitable NEMA rated enclosure. Ledpods may be used in wet location if driver is mounted in suitable rated enclosure and wire connections are made with listed wet location terminations. Note: Driver must be a Listed Component, Class 2, and 24 VDC.

12. Connect the driver to the AC power mains using location appropriate electrical terminations. Ground the driver and enclosure using the mounting studs inside the enclosure.

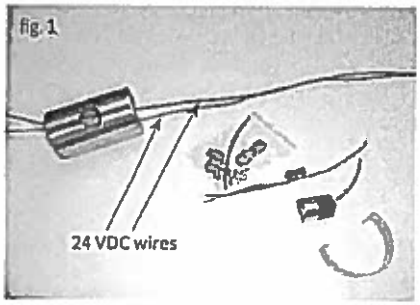

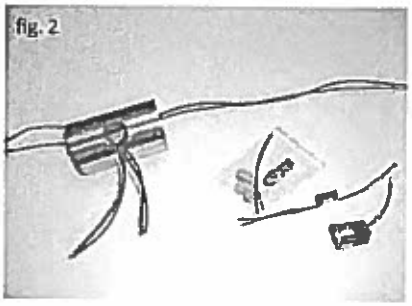

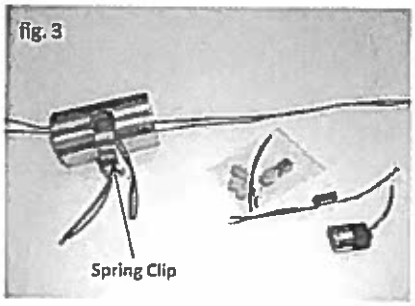

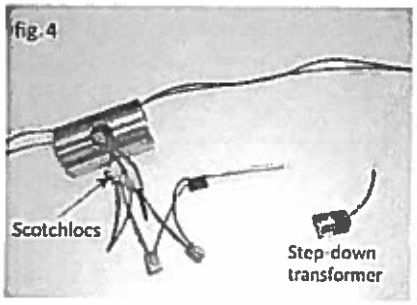

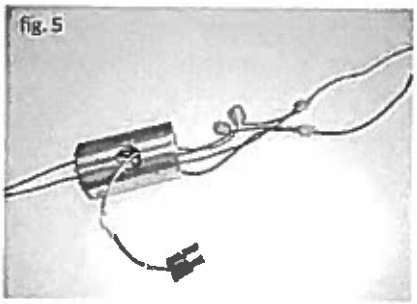

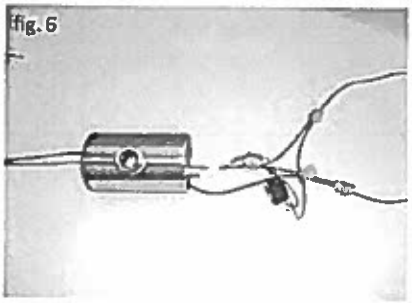

© 2013

WAGNER
ARCHITECTURAL SYSTEMS

Wagner Lumenrail® Ledpod

Post Mount Wiring Diagram

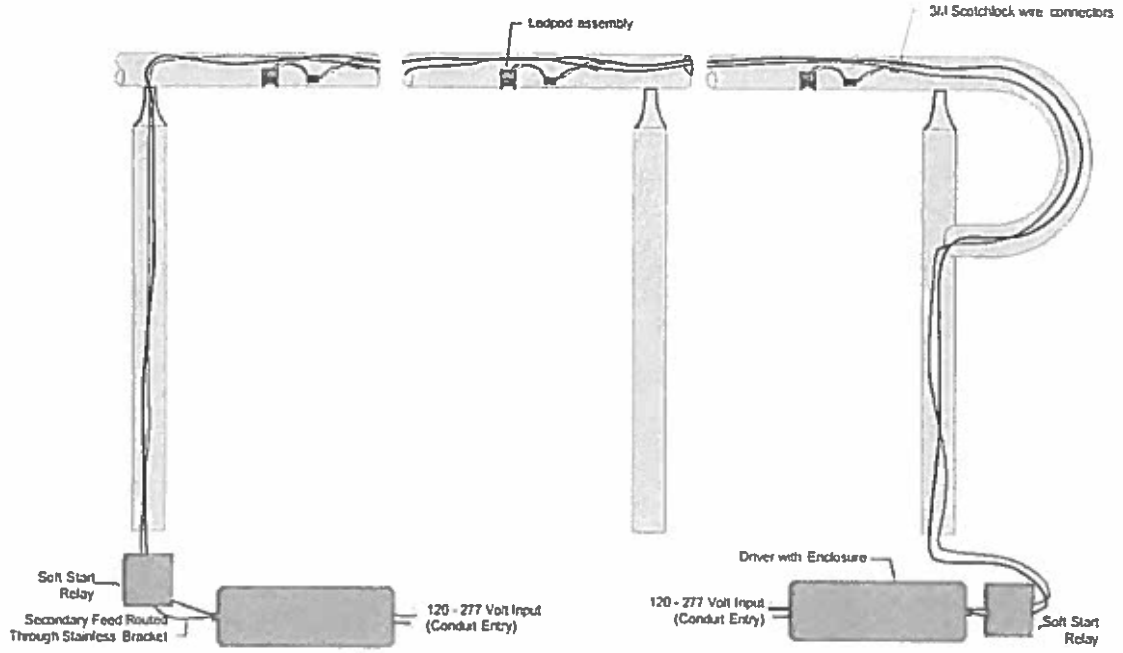

Wall Mount Wiring Diagram

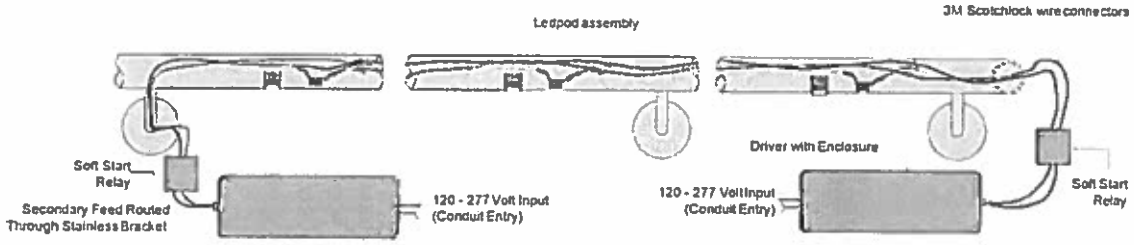

Remote Distance Chart

24 VDC 100W Driver	MAXIMUM DISTANCE FROM DRIVER TO FIRST LED				
WIRE SIZE	10 AWG	12 AWG	14 AWG	16 AWG	18 AWG
DISTANCE	120'	71'	46'	29'	18'

NOTE: *Wire to be supplied by installer, appropriately sized, and meeting local electical code.*

SURFACE MOUNT

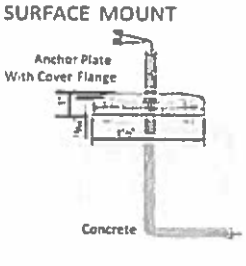

EMBEDDED

© 2013

INSTALLATION TYPES

HANDRAILS AND GUARDS

Defined by building codes, handrails are in place to provide guidance while the purpose of a guard is to prevent accidental falls.

Handrails are located between 34" and 38" and have dimensional limitations for graspability. Most codes and standards limit handrail size to be between 1¼" and 2" in diameter or provide equivalent graspability.

Guards are generally required for ramps, stairs or landings above 30". The height will vary depending on the code. Commercial codes commonly require a guard to be a minimum of 42" in height, while residential codes only require a guard to be a minimum of 36" in height. Always confirm these dimensions with your local code authorities. If a 42" guard is called for on a stair or ramp, it will also require a handrail at the appropriate height. Guards also have opening limitations to consider. The most common requirement is that no opening be large enough to allow a 4" sphere to pass.

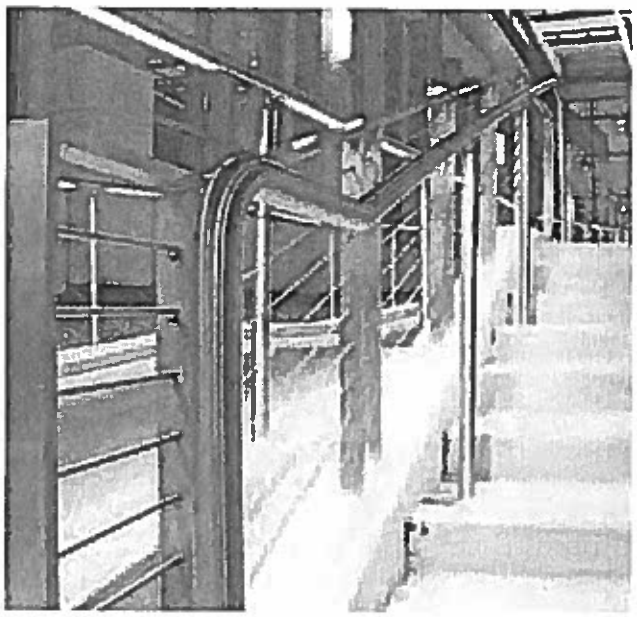

Wall mount with top and bottom extensions, return to wall

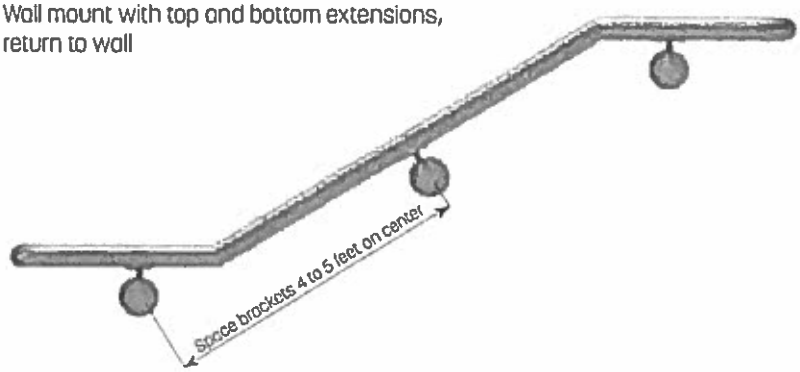

Wall mount with top extension, return to wall

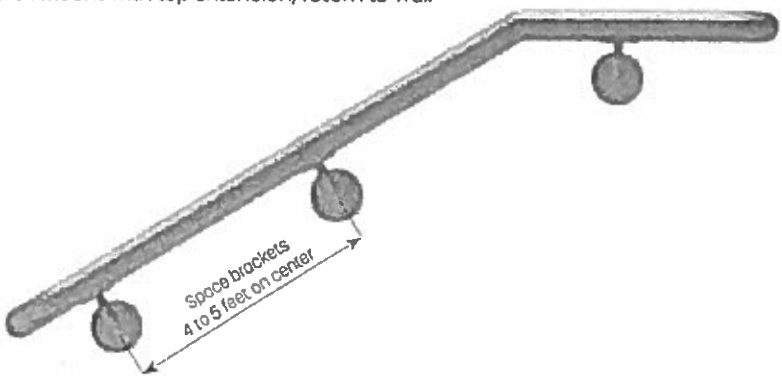

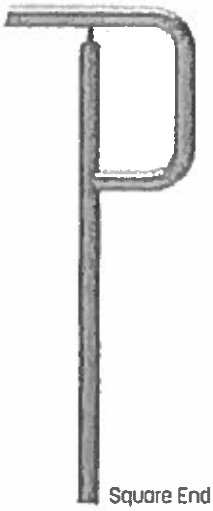

Square End Loop Option

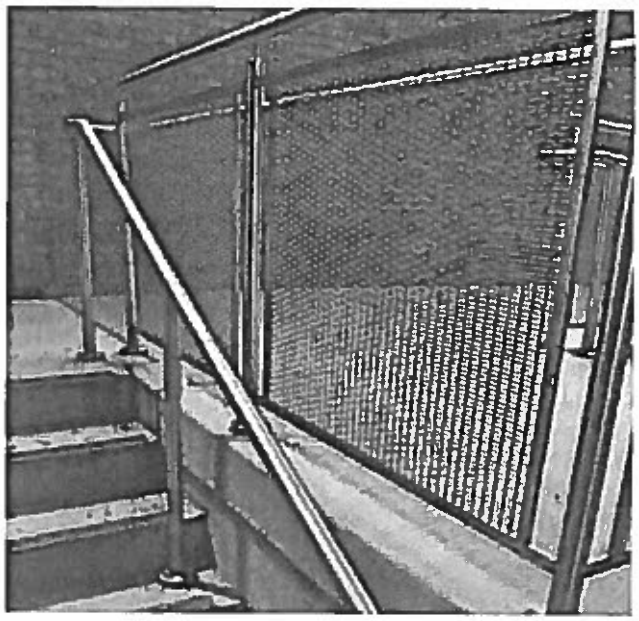

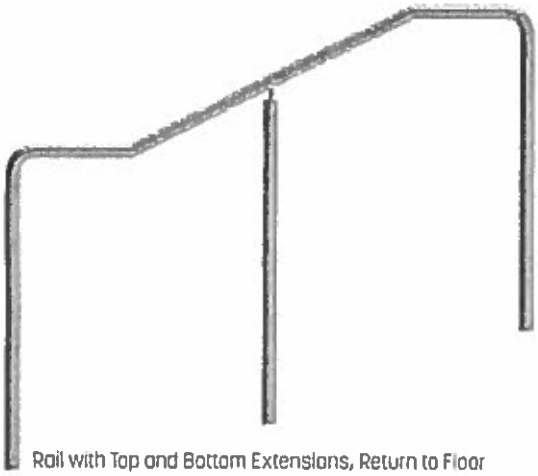

Rail with Top and Bottom Extensions, Return to Floor

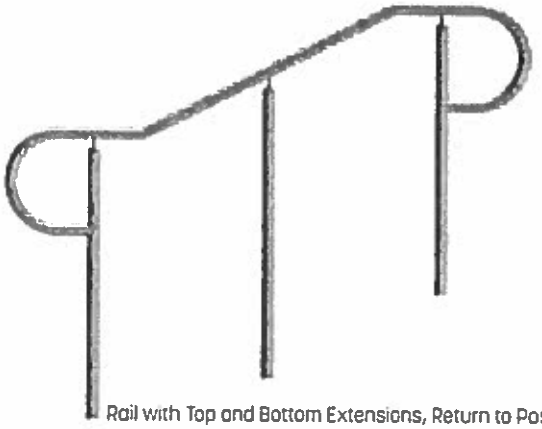

Rail with Top and Bottom Extensions, Return to Post

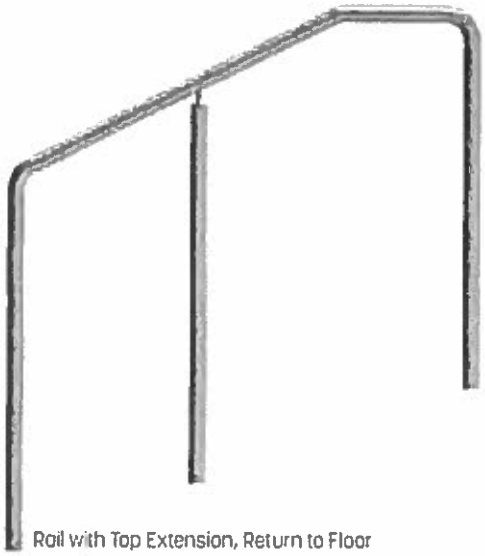

Rail with Top Extension, Return to Floor

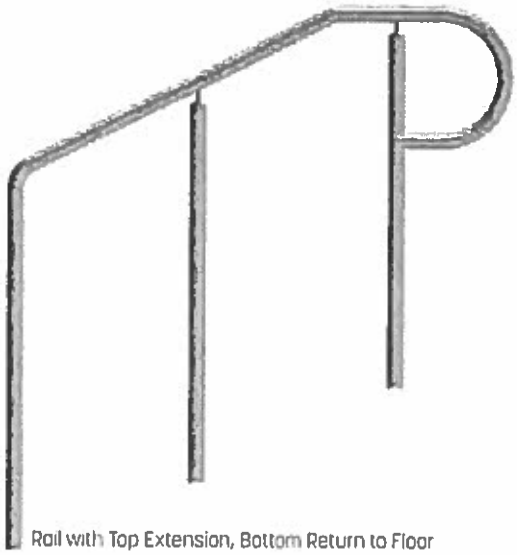

Rail with Top Extension, Bottom Return to Floor

LUMENRAIL® LINEAR

LUMENRAIL® TECHNICAL SPECIFICATIONS

CCT: 3000 °K, 3500 °K, 4000 °K, 5000 °K
CRI: 84+
Power Consumption
  Standard Output: 2W/Ft
  Medium Output: 4W/Ft
  High Output: 6W/Ft
Lens Finish: Matte and Transparent
Beam Angle: 60 and 120 degree
Distribution: Symmetric and Asymmetric
Voltage: 24 VDC
Driver: Class 2, 100 Watt, 24 VDC driver, 115-277 VAC or 347 VAC input
Listing: ETL and cETL listed for wet location
Dimmable: PWM
Battery Backup: Compatible with sine wave inverters

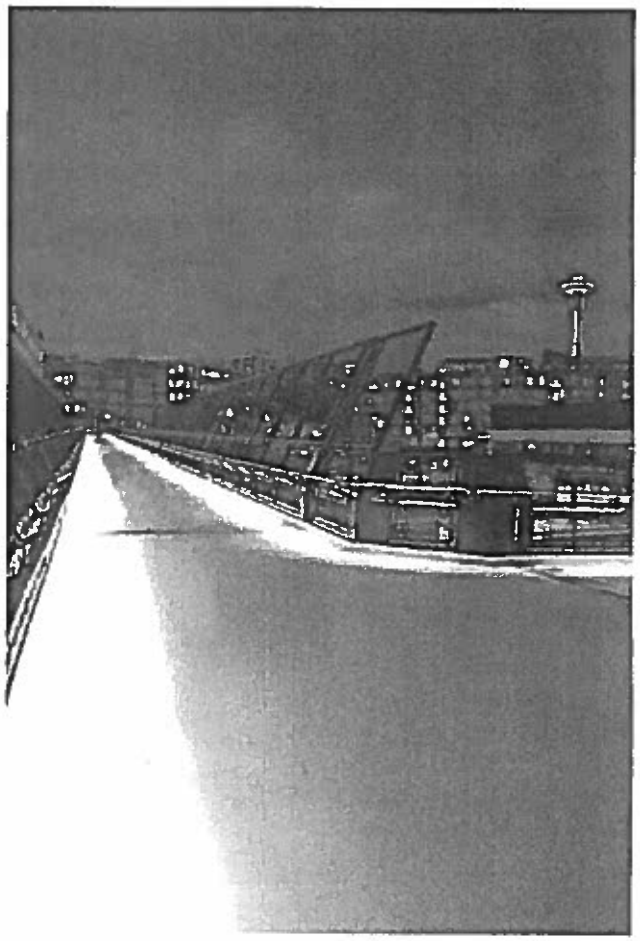

KLIK ledpod™

Patent Pending

FEATURES

- Can be used in curved and helical railings
- Available in square handrail
- Symmetric and asymmetric output
- Tamper resistant
- Dimmable with PWM, DMX, and DALI
- 50,000 hour life
- Field serviceable
- IP 66 rating
- No threading required
- May be used with square wave inverters

LEDPOD TECHNICAL SPECIFICATION

CRI: 84+
CCT: 3000 °K, 4000 °K, 5000 °K
Suggested Spacing: 2' on center to 5.5' on center
Ledpod Voltage: 24 VDC
Driver Voltage In: 115 VAC - 277 VAC
Listing: ETL cETL listed for wet location
Power Consumption: 2W/fixture
Lumens/Fixture:
3K: 145 lm
4K: 154 lm
5K: 176 lm

Fits Tube/Pipe Sizes: 2" pipe (2.38" diameter); schedule 40
1.50" diameter tube with .120" wall
1-¼" pipe (1.66" diameter); schedules 5, 10 and 40
1-½" pipe (1.90" diameter); schedules 5, 10 and 40
1.50" square tube with .120" wall
40mm square tube with 2mm wall

Railing Materials: Anodized Aluminum
Brass
Bronze
304 Stainless Steel
316 Stainless Steel
Steel

LUMENRAIL® LEDPOD

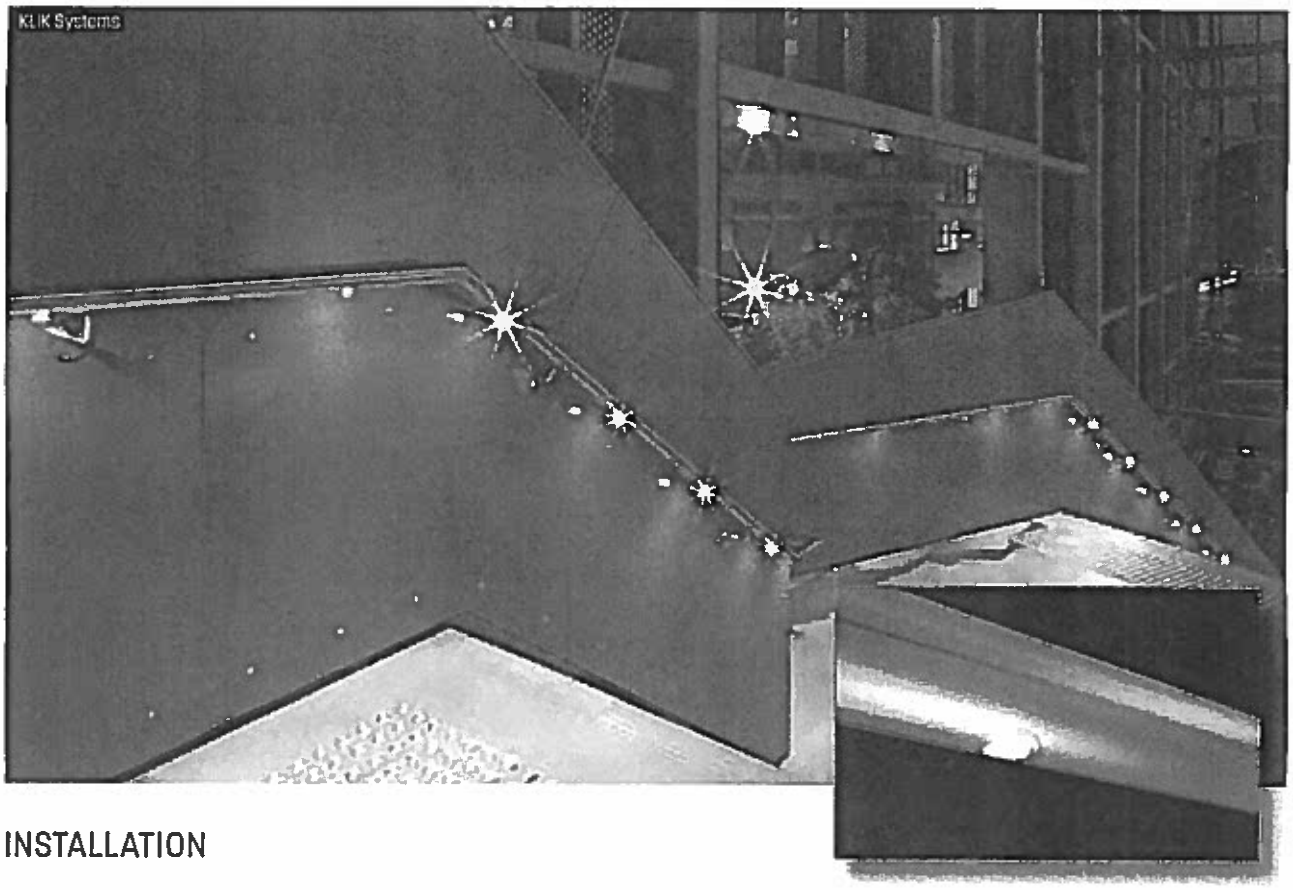

INSTALLATION

Asymmetric Light Distribution

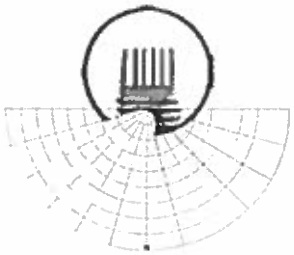

Push in to install, no threading of hole required. **1**

Ledpod's simple installation complete. **2**

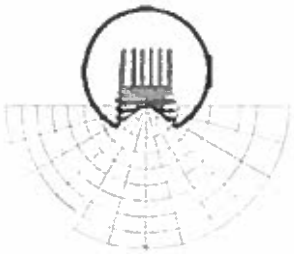

Symmetric Light Distribution

Remove with a simple quarter turn. **3**

KLIKLED® ledpod®Pathfinder

FEATURES

- 3000K, 4000K, and 5000K
- Bi Directional pedestrian pathway illumination
- Full automatic operation
- Remote server DMX show control with pedestrian override
- Pedestrian Sensor installed in handrail
- Preconfigured number of ledpods to illuminate path
- Adjustable dimmed setting (with showplayer option)
- 100% illumination of pathway during pedestrian sensing
- Full IP65 componentry

The new Ledpod Pathfinder system integrates motion sensors into the LED handrail for zoned illumination control. This allows the system to remain in a dimmed state until a pedestrian enters the area. Upon sensing an occupant the system will scale the light levels to full output and hold to a predetermined time.

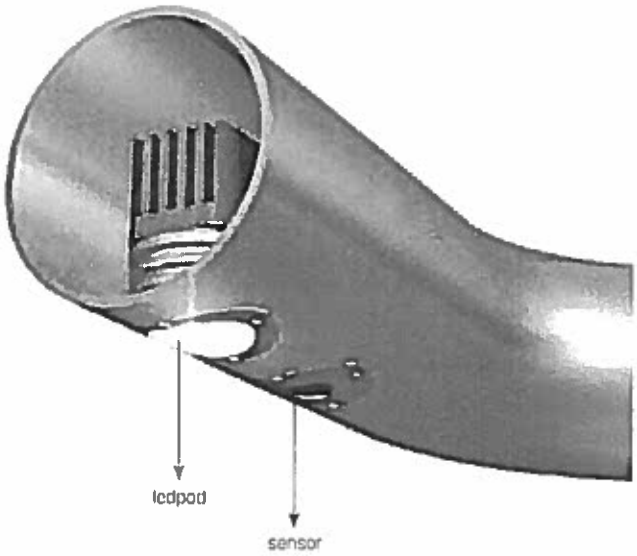

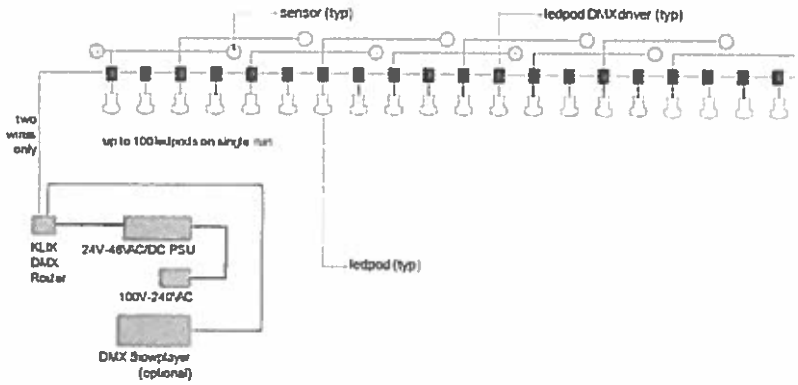

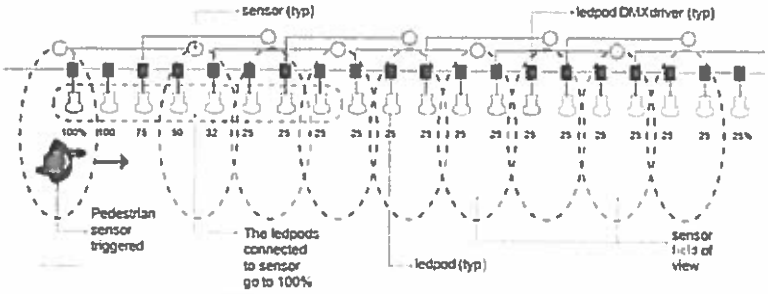

START OF BRIDGE

HANDRAIL WITH LEDPODS

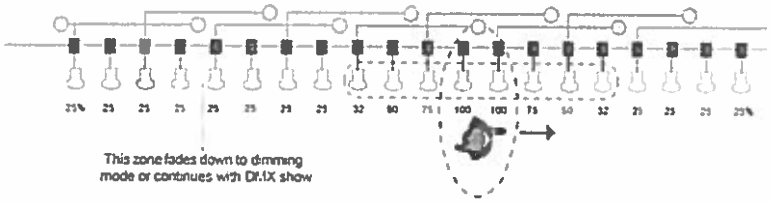

START OF BRIDGE

HANDRAIL WITH LEDPODS

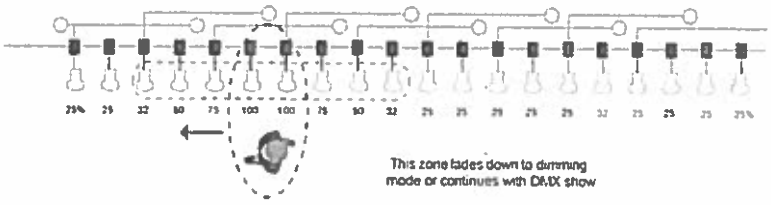

KLIKLED® ledpod®XL

FEATURES

- 300 lm to 1000 lm package range
- Fits into 2¾" to 9½ outside diameter round or square profiles
- LedpodXL is available in both symmetrical and asymmetric distribution
- The luminaire can be recessed into ceilings, square and cylindrical structures
- Optically designed glass or polycarbonate lens
- Large heat sink with excellent mass and surface areas for efficient heat dissipation
- The heat sink does not contact the glass lens, thus reducing the temperature at the point of human contact
- 50,000 hours plus expected from the Cree LED
- Integrated 500mA driver for each LED. Failure is limited to a single LED in each instance
- Simple to install with the use of screw down anti-vandal fasteners and plug and socket for electrical connection
- IP65

LEDPOD XL TECHNICAL SPECIFICATION

LED

Cree XPG LED (color temp 3000K, 4000K & 5000K)

DRIVER

Integrated 500mA LED Driver – Input 5 to 36VDC (24VDC)
System lm/W 72
Driver short circuit & over temp protected
0-10 VDC, DMX, and DALI dimming available on request
EN-60950-1 certified
Driver Temp – 40°c to +80°c

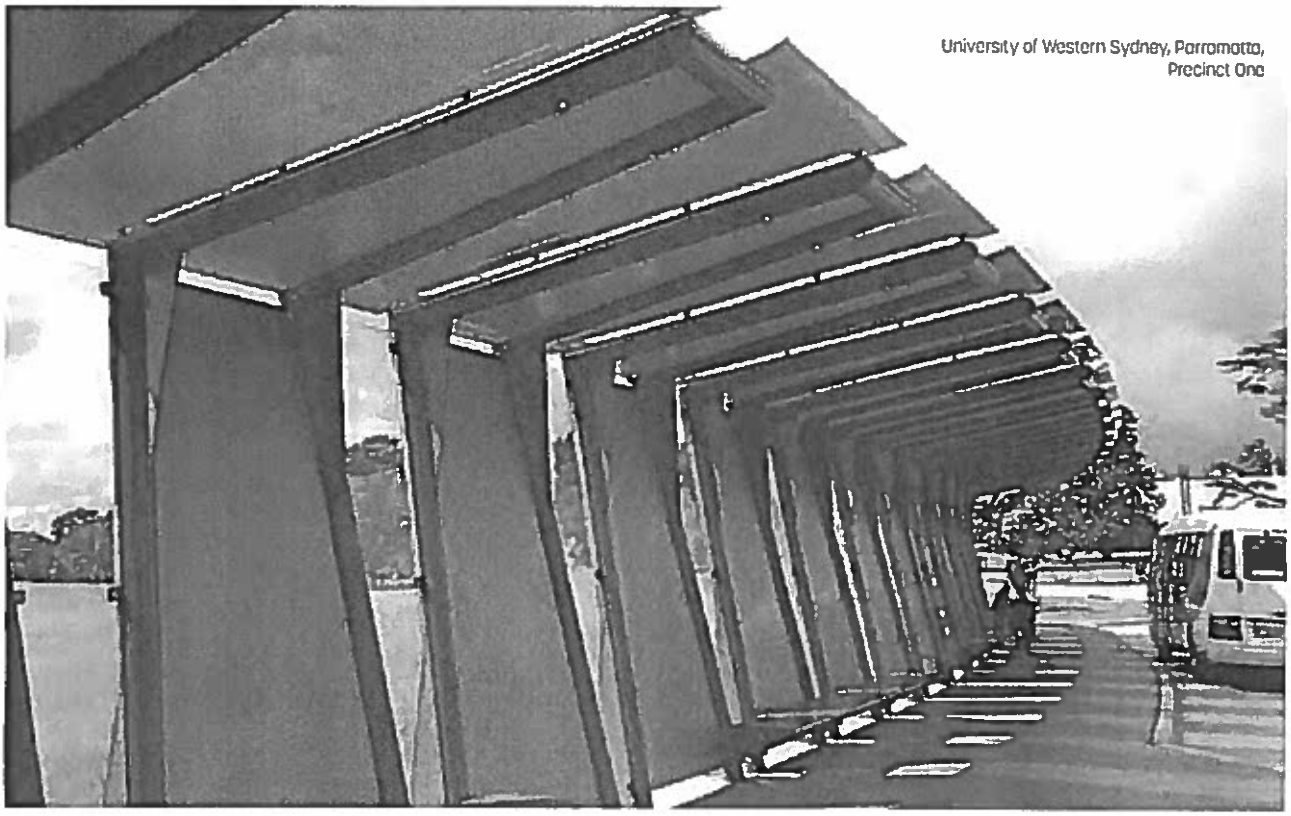

University of Western Sydney, Parramatta, Precinct One

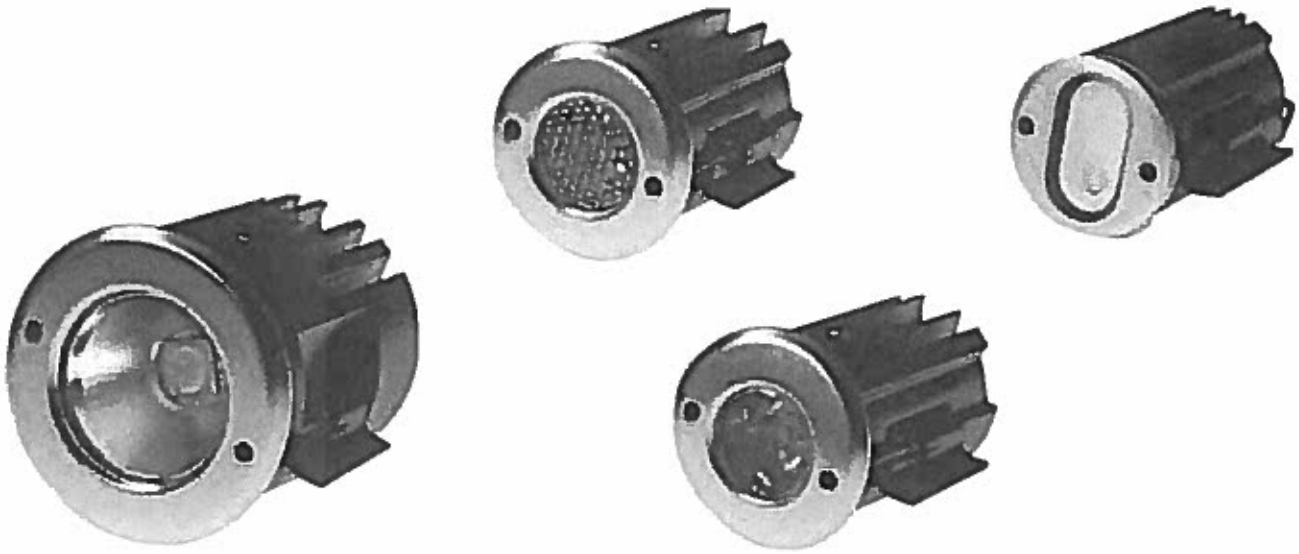

■ IP65.

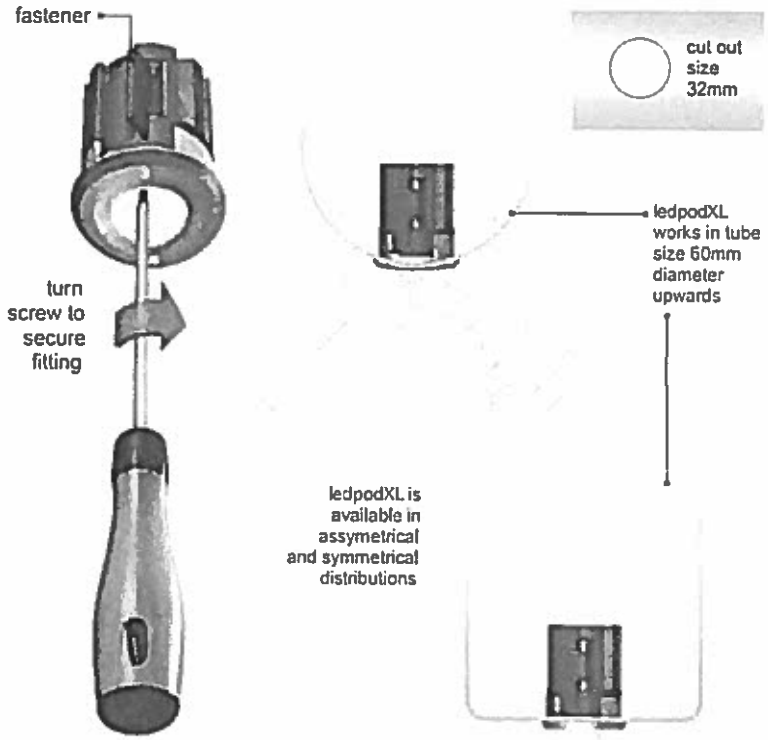
fastener
turn screw to secure fitting
cut out size 32mm
ledpodXL works in tube size 60mm diameter upwards
ledpodXL is available in assymetrical and symmetrical distributions

CABLE RAIL

Wagner has more than 10 years of history fabricating cable rails.

- Created to address the deficiencies encountered in using standard tensioning mechanisms for cable barrier railings
- All retainers feature smooth lines and soft edges
- Fittings are engineered to blend with the rail
- Factory or field swaged fittings hide crimps
- Spec-grade 316 alloy cable resists staining and provides high quality finish and appearance

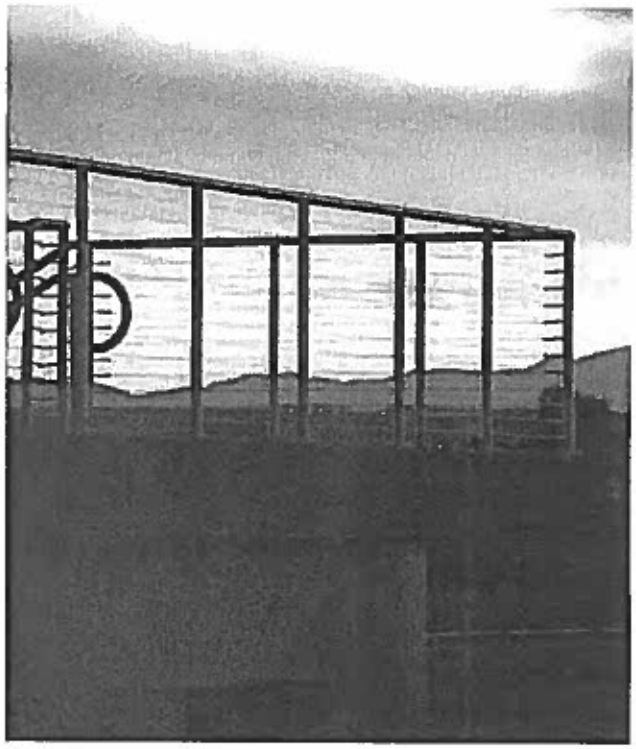

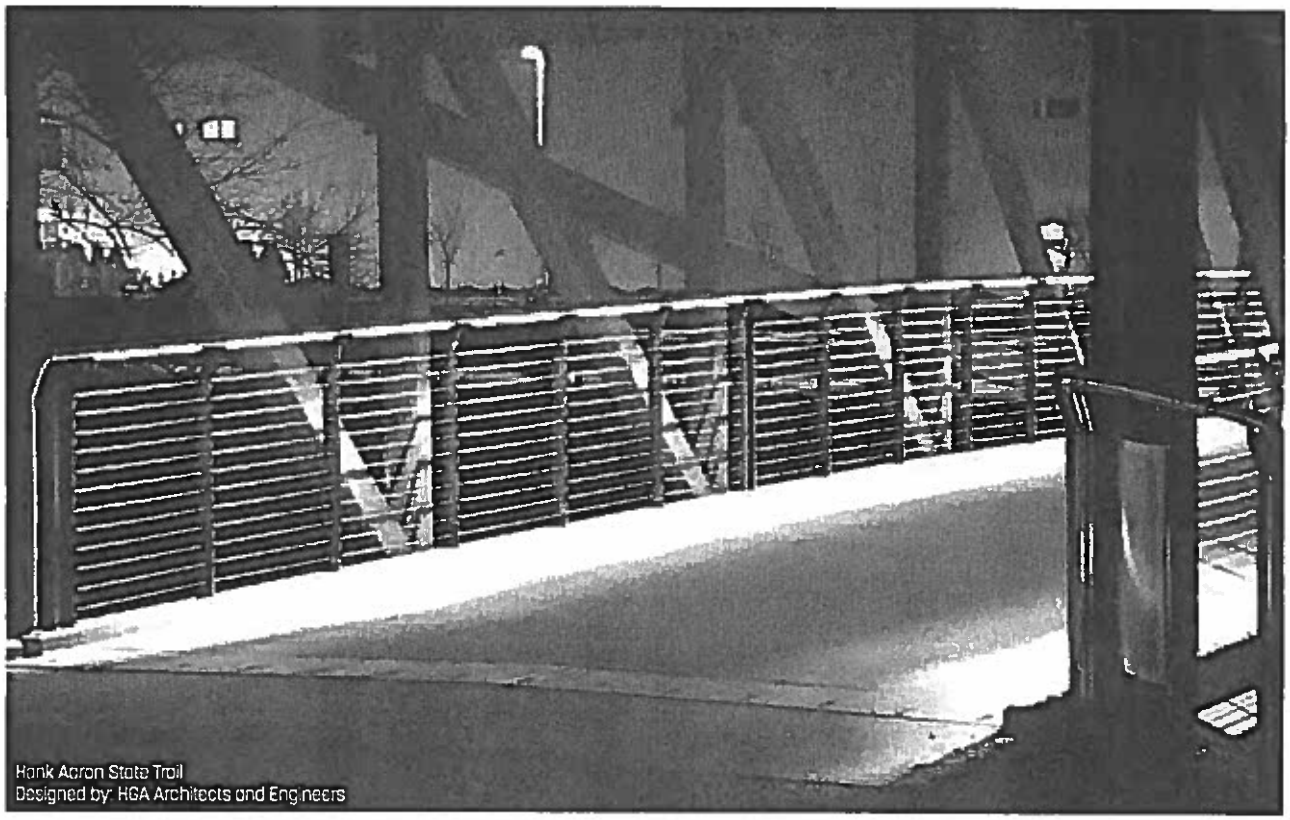

Hank Aaron State Trail
Designed by: HGA Architects and Engineers

ELECTRICAL

LUMENRAIL WIRE DIAGRAM

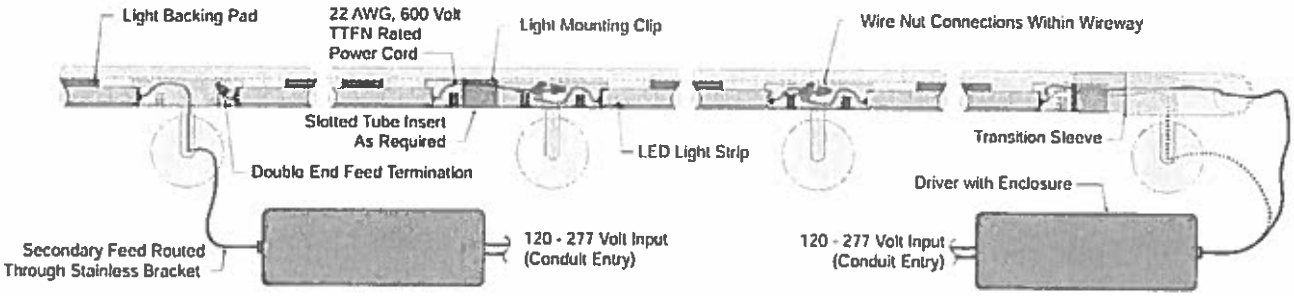

LEDPOD WIRE DIAGRAMS

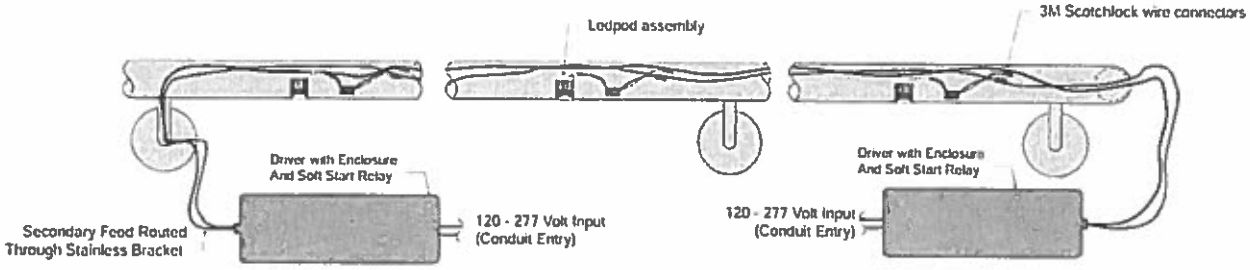

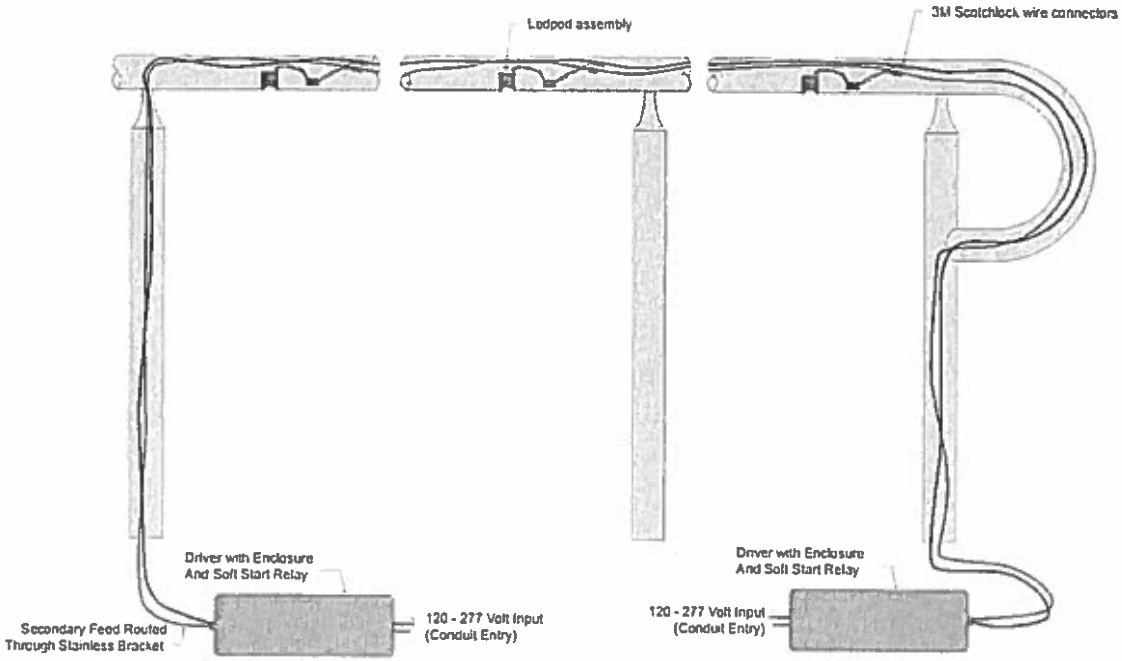

BUILDING CODES

All references in this section are taken from current versions of the model codes – International Building Code (IBC), the National Fire Protection Association (NFPA) Life Safety Code, as well as standards from the American National Standards Institute (ANSI), the Americans With Disabilities Act (ADA) and Architectural Barriers Act (ABA) Standards for Accessible Design.

Local jurisdictions generally use these codes and standards to create their own. Always confirm with your local Authority Having Jurisdiction (AHJ) prior to using or specifying any railing products.

HANDRAIL AND GUARD

Handrails are in place to provide guidance while the purpose of a guard is to prevent accidental falls.

Guards are generally required for ramps, stairs or landings with a drop greater than 30".

The IBC requires a guard to be a minimum of 42" above the walking surface. The International Residential Code (IRC) minimum height requirement is 36".

Handrails are located between 34" and 38" above stair nosings and have dimensional limitations for graspability. Under the IBC, if a 42" guard is called for on a stair or ramp, it will also require a handrail at the appropriate height.

Handrail also must meet dimensional requirements for graspability as shown in the image to the right. A guard top rail, that is not used as a handrail, would not have a graspability size limitation.

Guards also have opening limitations to consider. Both the IRC and the IBC state that no opening be large enough to allow a 4" sphere to pass.

While a handrail may need to be installed on stairs less than 30" high, it does not have to meet the opening limitations required of a guard.

LOAD REQUIREMENTS

In addition to dimensional and infill requirements, handrails and guards are required to withstand a minimum structural load of 200 lbs concentrated or 50 lbs/ft uniform at the top of the guard or handrail. Infills are required to meet a 50lb/sq ft load.

ACCESSIBILITY GUIDELINES AND STANDARDS

There are three primary references that have been used throughout the country in relation to accessibility: ICC/ANSI A117.1, "Accessible and Usable Buildings and Facilities," and the Americans with Disabilities Act (ADA) and Architectural Barriers Act (ABA) "Standards for Accessible Design" (SAD).

Many states have their own accessibility standards based on the 2010 ADASAD. While they are for the most part in harmony with the federal standard, some variances exist. Again, always confirm with your local AHJ to avoid costly delays or changes.

HANDRAIL DIMENSIONS

Current codes are now in harmony regarding most handrail dimensions and clearance requirements.

Handrail gripping surfaces with a circular cross section must be between 1¼" minimum and 2" maximum.

Non-circular handrail is limited to a maximum cross section of 2¼" with a perimeter dimension between 4" and 6¼".

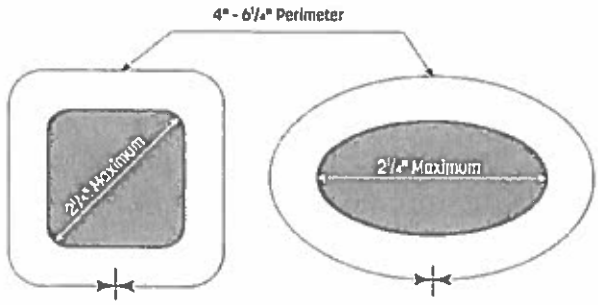

Handrail is also required to be free of obstructions. If mounted to the top of a post, the bottoms of the handrail may not be obstructed for more than 20% of their length.

If mounted to a wall or the side of a post, the handrail must be a 1½" minimum clearance.

NOTE: If your handrail is subject to the requirements of NFPA 101 - Life Safety Code, you will need to provide a minimum clearance of 2¼". Also note that the California Accessibility Standards are still using the 1990 ADAAG requirement that handrail must be 1½" – absolute – from the wall. Always confirm requirements with your local AHJ.

Where provided, horizontal projections (i.e. bracket arms) shall occur 1½" minimum below the bottom of the handrail gripping surface. The distance between horizontal projections and the bottom of the gripping surface shall be permitted to be reduced by ⅛" for each ½" of additional handrail perimeter dimension that exceeds 4". Use this table for reference.

Railing Diameter	Perimeter	Subtract From Underside of Railing	Clearance from Underside of Railing
1.25"	3.92"	0	1½"
1.50"	4.71"	-⅛"	1⅜"
1.66"	5.21"	-¼"	1¼"
1.90"	5.97"	-½"	1"
2.00"	6.28"	-½"	1"

BUILDING CODES

HANDRAIL EXTENSION REQUIREMENTS

Handrail extension requirements have changed in the more recent versions of the various codes and standards. You should confirm whether your local AHJ has updated to the current versions of these requirements.

At the top of a stair, handrail must extend horizontally above the landing for 12" minimum beginning directly above the first riser nosing. At the bottom of a stair, handrail must extend at the slope of the stair flight for a horizontal distance equal to one tread depth beyond the last stair nosing.

For a ramp, a 12" horizontal extension is required at both the top and bottom landings.

Some local AHJs are still requiring a horizontal extension at the bottom of a stair or have longer extension requirements.

Extensions must also return to a wall, guard, or the landing surface; or shall continue to the handrail of an adjacent stair flight.

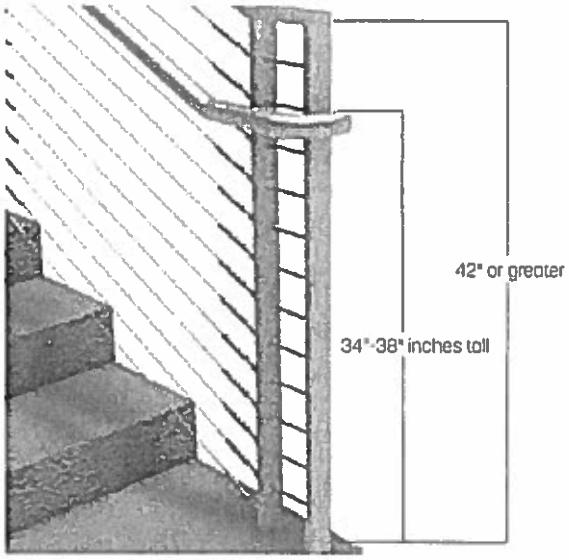

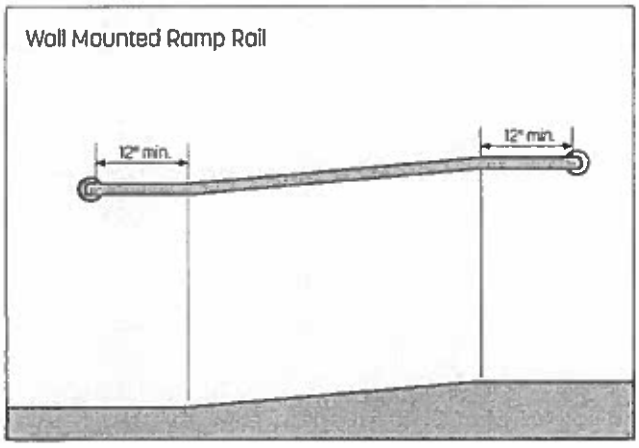

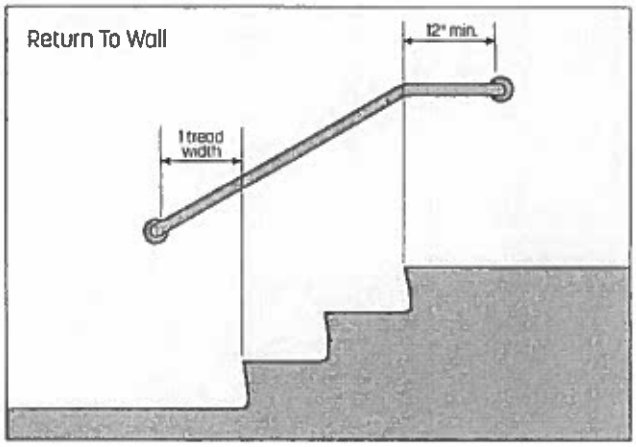

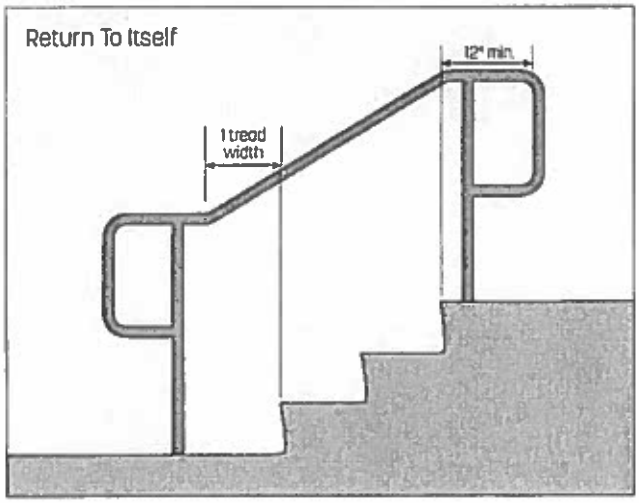

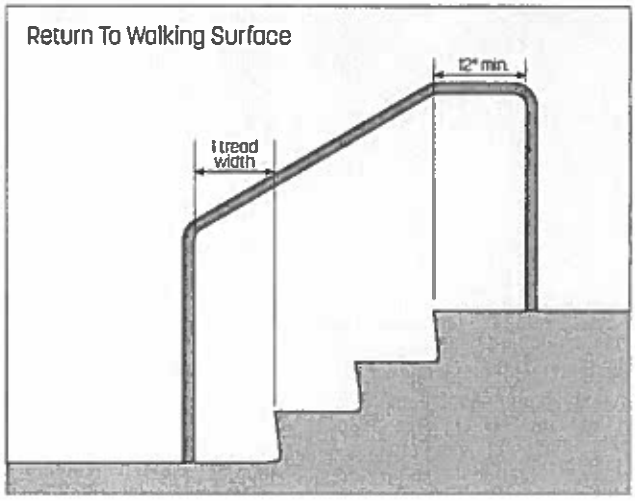

TECHNICAL

ELECTRICAL

Lumenrail® operates on 24V DC power supplied by a Class 2, 100 Watt driver housed in a NEMA 3R enclosure. Up to 3 drivers may be daisy chained together for longer railing runs.

Lumenrail LEDs consume 1.8 watts per foot and up to 40' of lights may be powered off each individual driver. The driver must be remotely located from the rail.

Lumenrail is dimmable using pulse with modulation. Please consult your Lumenrail representative or Wagner for PMW dimming module suggestions and other information.

INFILL OPTIONS

When used in a guard rail application, the guard must meet the requirements of the building code. Typically this would require a minimum height of 42" – for commercial applications – with no openings large enough to permit the passage of a 4" sphere. To meet this requirement, an infill of some type will be required. Lumenrail is available with several choices of infill, including: Cable, Glass and Archimesh™ woven wire.

MOUNTING

SURFACE MOUNT

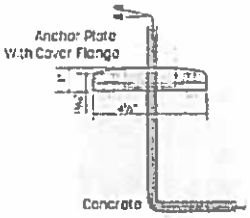

EMBEDDED

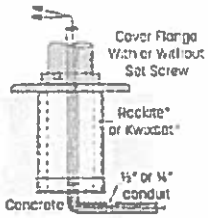

REMOTE DISTANCE CHART

24 VDC 100W Driver	MAXIMUM DISTANCE FROM DRIVER TO FIRST LED				
WIRE SIZE	10 AWG	12 AWG	14 AWG	16 AWG	18 AWG
DISTANCE	120'	71'	46'	29'	18'

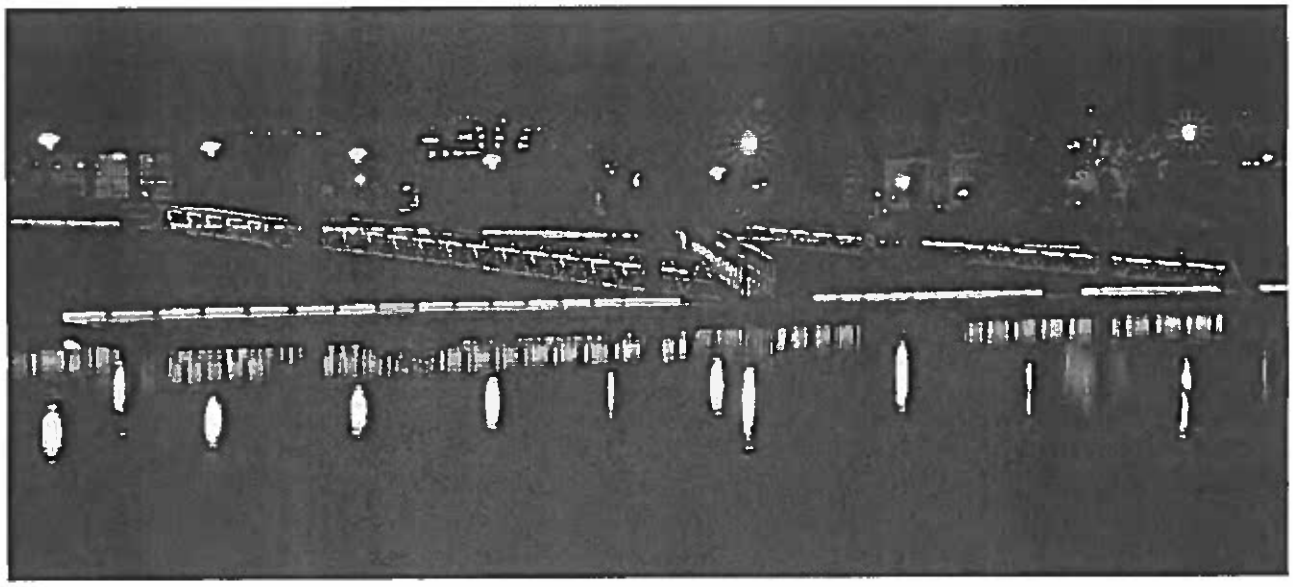

FOOT CANDLE GRAPHICS

4000K Light Foot Candle Chart

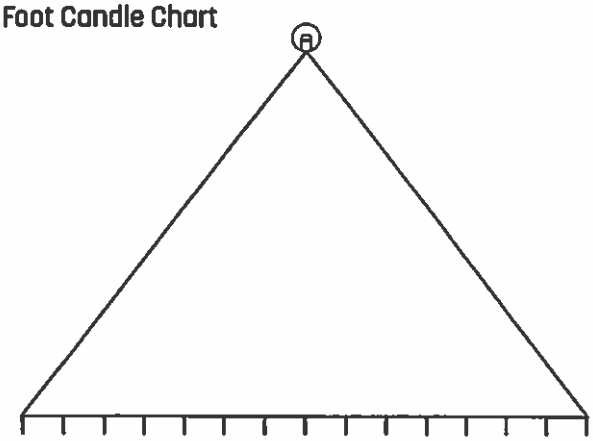

34" High Rail Light Option:	7'	6'	5'	4'	3'	2'	1'	0	1'	2'	3'	4'	5'	6'	7'
2W/Ft Matte	0.4	0.4	1.0	2.0	4.0	7.5	12	13	12.9	7.5	4.0	2.0	1.0	0.5	0.4
2W/Ft Transparent		0.2	0.4	0.7	1.4	7.3	21.5	23.8	21.5	7.3	1.4	0.7	0.4	0.2	
4W/Ft Matte	0.8	1.2	1.9	3.0	4.9	13.6	28.0	30.4	28.0	13.6	4.9	3.0	1.9	1.2	0.8
4W/Ft Transparent	0.5	0.72	1.2	1.9	3.3	12.6	40.8	44.2	40.8	12.6	3.3	1.9	1.2	0.7	0.5
6W/Ft Matte	1.4	2.1	3.2	5.1	8.7	24.8	49.8	54.7	49.8	24.8	8.7	5.1	3.2	2.1	1.4
6W/Ft Transparent	0.7	1.0	1.1	2.1	4.3	20.5	62.4	69.6	62.4	20.5	4.3	2.1	1.1	1.0	0.7

42" High Rail Light Option:															
2W/Ft Matte		0.7	1.2	2.2	4.1	6.2	9.6	11.7	9.6	6.2	4.1	2.2	1.2	0.7	
2W/Ft Transparent		0.2	0.5	0.7	1.9	9.3	16.9	18.1	16.9	9.3	1.9	0.7	0.5	0.2	
4W/Ft Matte	1.1	1.4	2.1	3.3	5.7	17.2	24.6	26.0	24.8	17.2	5.7	3.3	2.1	1.4	1.1
4W/Ft Transparent	0.6	1.0	1.4	2.3	4.3	18	35.6	37.8	35.6	18	4.3	2.3	1.4	1.0	0.6
6W/Ft Matte	1.4	2.1	3.2	4.8	8.3	25.8	36.7	38.7	36.7	25.8	8.3	4.8	3.2	2.1	1.4
6W/Ft Transparent	0.8	1.4	2.1	3.5	4.1	26.9	53.4	56.5	53.4	26.9	4.1	3.5	2.1	1.4	0.8

Factors for other color temperatures:

3000 °K ——— 98%
3500 °K ——— 99%
5000 °K ——— 120%

LEDPOD™ FOOT CANDLE CHART

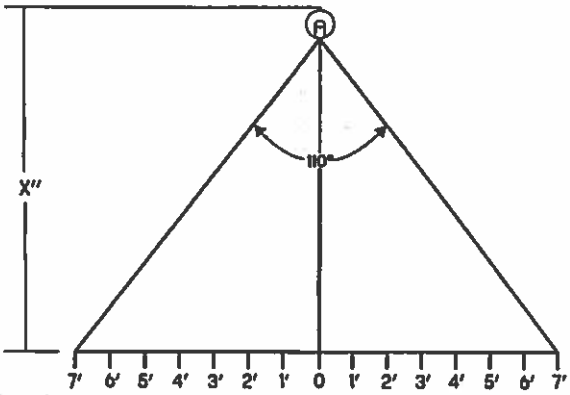

	7'	6'	5'	4'	3'	2'	1'	0	1'	2'	3'	4'	5'	6'	7'
Asymmetric Optic															
34" Tall:					.8	1.5	3.3	10.2	13.4	11.8	8.9	5.1	2.7	1.4	
42" Tall:					.7	1.6	3.5	9.0	12.2	10.8	8.8	6.2	3.7	2.2	1.2
Symmetric Optic															
34" Tall:		.2	.9	3.7	8.1	13.7	15.8	13.7	8.1	3.7	.9	.2			
42" Tall:		.5	1.7	4.8	8.1	12.2	13.3	12.2	8.1	4.8	1.7	.5			

BANTAM FOOT CANDLE CHART

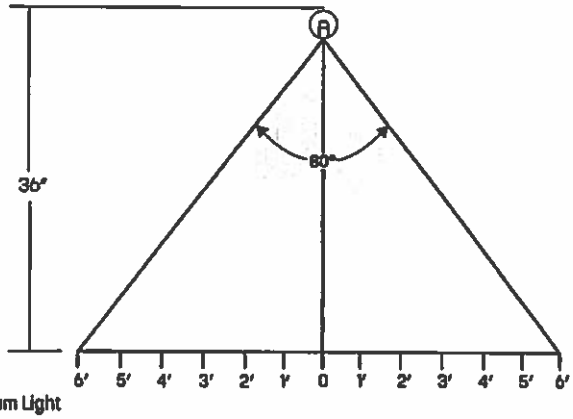

	6'	5'	4'	3'	2'	1'	0	1'	2'	3'	4'	5'	6'
Bantam Light Foot Candles	.1	.6	1.6	2.7	3.1	2.7	1.6	.6	.1				

STAINLESS STEEL
CLEANING INSTRUCTIONS

WAGNER
ARCHITECTURAL SYSTEMS

Give your railing a face lift; follow this step by step guide to cleaning and passivating your stainless steel railing system.

BEFORE

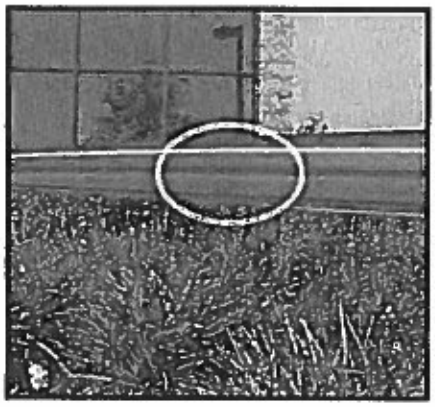

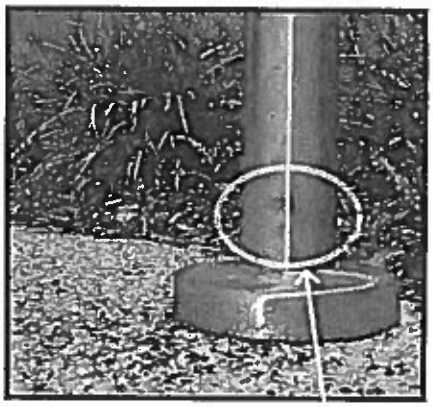

BEFORE

"tea-stain"

Begin by removing heavy soils with a simple soap solution scrub.

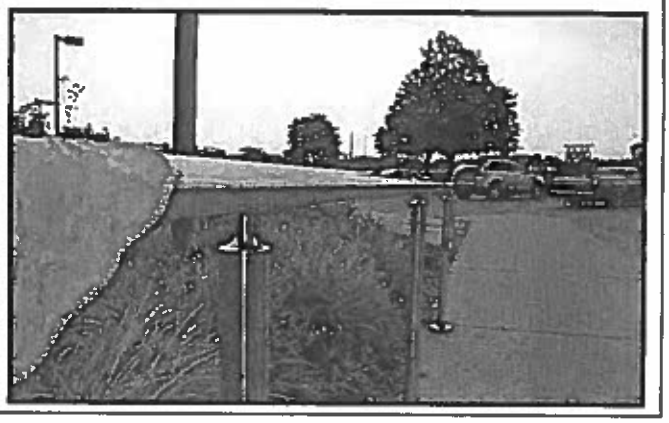

Next, apply a passivation solution such as CitriSurf. Follow the manufacturer's instructions, allowing solution to soak on surface. Protect non-metallic surfaces from exposure.

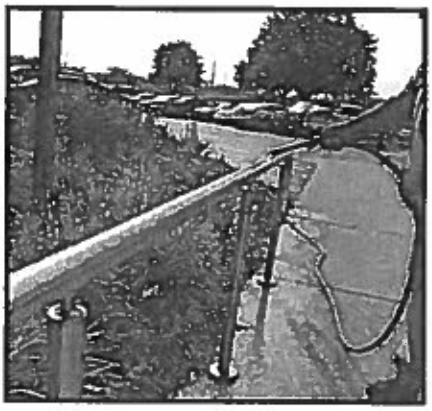

STAINLESS STEEL
CLEANING INSTRUCTIONS

WAGNER
ARCHITECTURAL SYSTEMS

Pictured below is the clean stainless steel railing after passivation.

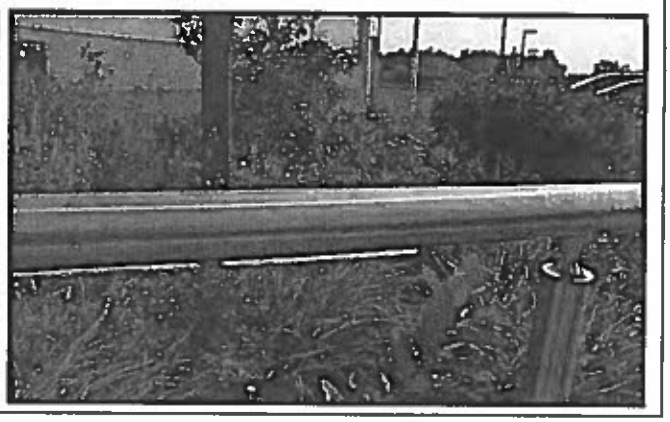

Optional Step: Brighten finish with ScotchBrite™ treatment. Make sure to maintain grain direction.

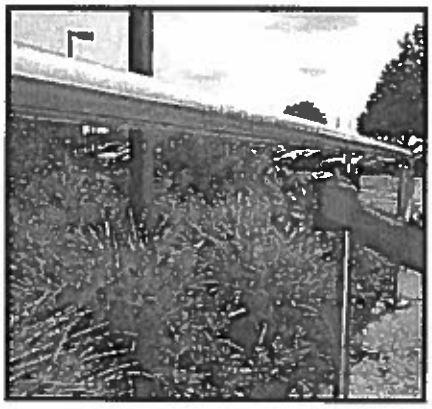

Next, apply car wax to railing system and let dry. Follow up by buffing the railing to shine with a clean dry cloth.

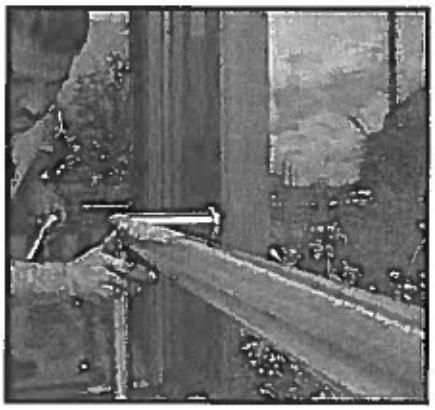
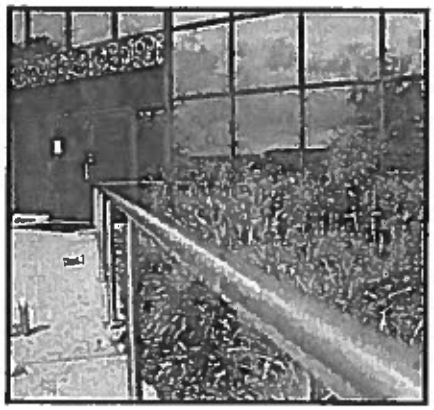

WAGNER
ARCHITECTURAL SYSTEMS

Results:

AFTER

Railing immediately after buffing.

Railing after 3 months exposure.

AFTER

WAGNER
ARCHITECTURAL SYSTEMS

Lumenrail® Ledpod - Round

Lumenrail Ledpod can be used in curved and helical railings.

PROJECT: ROCKLEDGE GOLF COURSE CLUBHOUSE & RESTAURANT EXTERIOR HANDRAILING REPLACEMENT PROJECT

MANUFACTURER: WAGNER ARCHITECTURAL SYSTEMS
TOP RAILING LED ILLUMINATION **'LEDPOD ROUND'** SERIES
MODEL NUMBER: LULP-50-40K-A-40

DESIGN CRITERIA TARGET IS 24" O.C., FIELD INTALLED. ESTIMATED QUANTITY 160PCS. INSTALLING CONTRACTOR TO FIELD VERIFY ACTUAL AS-BUILT COUNTS, COMPONENTS, AND MEASUREMENTS BASED ON COMPLETE AS BUILT STRUCTURE CONDITIONS.

Part # Builder

LULP	50	40K	A	40
Fixture Type	**Rail Size**	**Color**	**Distribution**	**Rail Wall Thickness**
Lumenrail Ledpod	**40** = 1.50" or 1.66" **50** = 1.90"+	**30K** = 3000° K **40K** = 4000° K **50K** = 5000° K	**A** = Asymmetric **S** = Symmetric	**1512** = 1.5" tube .120" wall **05** = sch. 5 **10** = sch. 10 **40** = sch. 40 *1512 can only be used with 40 size rail

Ledpod Cross Section View

Additional sizes are available as special order

Electrical Specifications

Input Voltage	24 VDC	Listing	ETL listed, UL 1598/CSA 22.2, CE	Enclosure	Minimum NEMA 3R required
Operating Temp	-40 to 120° F	Driver	Must use class 2 driver	Location	Wet location rated
Efficiency	88 lm/W	CRI	84+	Warranty	5 year warranty

Photometrics

Symmetric

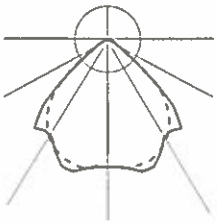

Asymmetric

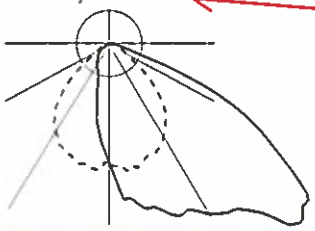

180°
270°

Lumens/Fixture or Pod

	1.5 W/pod	2 W/pod
	Transparent	Transparent
3000° K	107	145
4000° K	114	154
5000° K	130	176

Optional Accessories

NOTE: PROJECT REQUIRES 8 REMOTE DRIVER ENCLOSURES

Class 2 Driver Options		Enclosure		SSR	
LUDRIVER100W	Input voltage = 120-277 VAC Output voltage = 24 VDC 5 year warranty	LUENCLOSURE	NEMA 3R enclosure. 4" x 4" x 18". Fits driver and soft start relay.	LULPSSR	Ledpod Soft Start Relay, one required for each driver. Mounted in driver enclosure
LUDRIVER100HMA	Input voltage = 120 VAC Output voltage = 24 VDC 1 year warranty	LUENCLOSUREHMA	NEMA 3R enclosure. 4" x 4" x 18". Fits driver and soft start relay.		

© 2015

WAGNER
ARCHITECTURAL SYSTEMS

Wagner Lumenrail® Ledpod

TYPICAL EXAMPLE of LEDPOD INSTALLATION

Post Mount Wiring Diagram

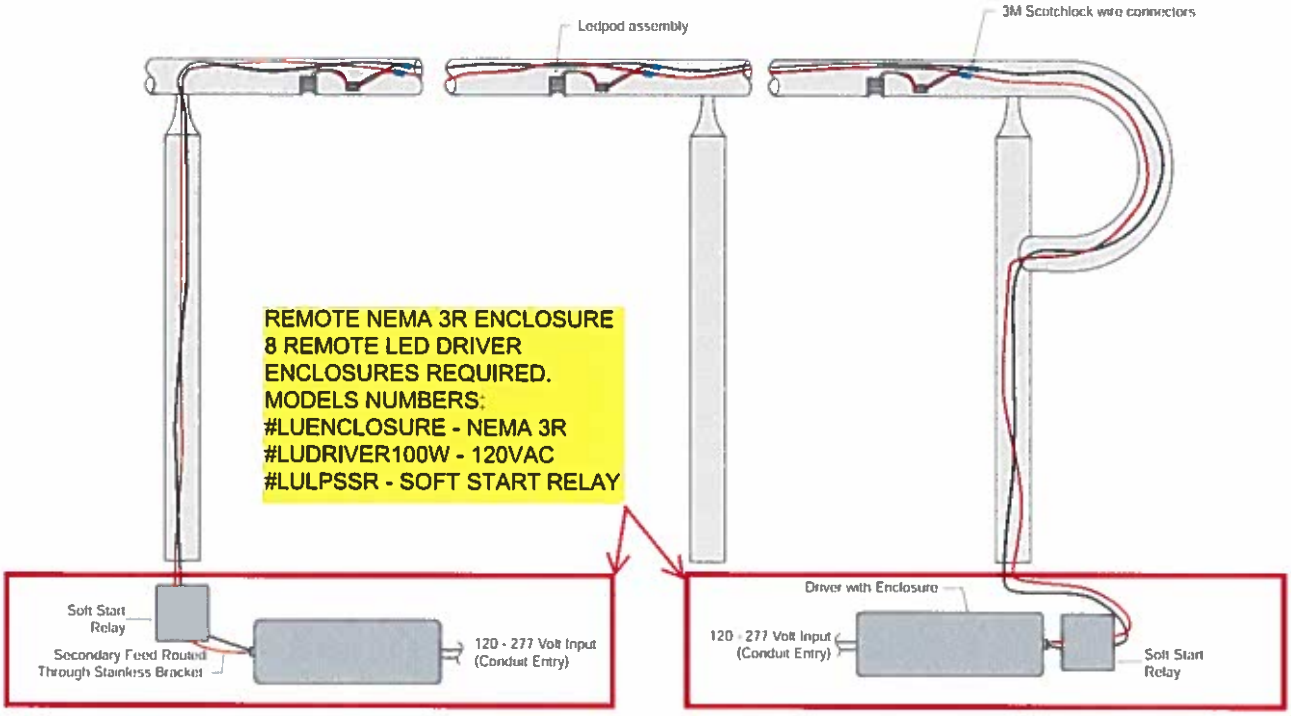

Wall Mount Wiring Diagram

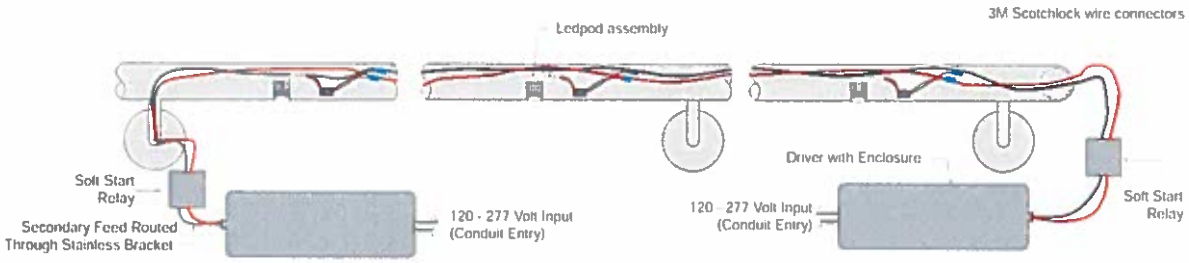

Remote Distance Chart

24 VDC 100W Driver	MAXIMUM DISTANCE FROM DRIVER TO FIRST LED				
WIRE SIZE	10 AWG	12 AWG	14 AWG	16 AWG	18 AWG
DISTANCE	120'	71'	46'	29'	18'

NOTE: *Wire to be supplied by installer, appropriately sized, and meeting local electical code.*

SURFACE MOUNT

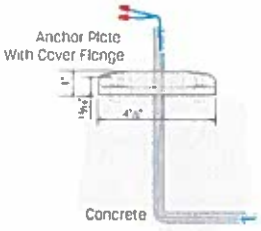

EMBEDDED

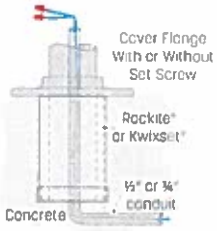

© 2013

WAGNER METAL WORKS - OPTIONAL TOP RAILING WITH PRE-DRILLED 25MM HOLES 24"O.C. TO ACCEPT LED 'LedPods'. #LZ-SS-1.90"-SCH40-304A-554SS-21'

The Wagner Companies has an extensive stock list of ***Architectural Shapes - Bars, Angles, Channels, Zees, Tees and Tubing.*** All of the **Wagner** architectural shapes have been selected for application in ornamental and miscellaneous metal work. Additional sizes and alloys may be obtained.

All items are stocked with a Mill Finish, except as noted. Contact ***rfq@mailwagner.com*** regarding special finishes.

Please review our quality expectations statement on page 223.

Shipping:
Architectural Shapes are sold in stock lengths, as noted, and therefore will ship by common carrier. Upon request, we will cut material to length for shipment by Federal Express. Cutting charges will apply. All cut materials are not returnable.

Steel sections are hot rolled Carbon Steel C1010, merchant quality.

Stainless Steel *Tubing* and ***Pipe*** are produced from Type 304 or Type 316 Stainless Steel, ornamental grade.

Aluminum extrusions are produced from Alloy 6063-T52, unless noted. Alloy 6063 is suitable for anodizing. Please note that welding is not recommended for Aluminum that is to be anodized. Welding will change the temper of the material and cause it to anodize inconsistently. Consult your anodizer before specifying.

Are You Working With *Pipe* or *Tube*?

Bronze *Tubing, Bars* and ***Shapes*** are extruded from Alloy C38500, Architectural Bronze. ***Round Pipe*** is drawn, Alloy C23000, Red Brass. Brass ***Tubing*** is Alloy C27000, Yellow Brass. Metal sheet is Alloy C28000, Muntz Metal. Architectural Bronze, Red Brass and Muntz Metal are considered color matches for architectural applications.

Pipe

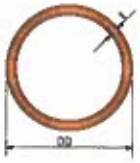

Red Brass Pipe

Alloy C23000
20' Lengths

Mill Finish. Other finishes available on request.

Pipe Size	OD	ID	t	lb/ft	RED BRASS
1¼"	1.66"	1.38"	.140"	2.630	P1110
1½"	1.90"	1.61"	.150"	3.130	P1120

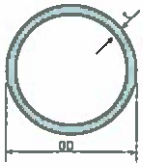

Aluminum Pipe

Alloy 6063
20' Lengths

Mill Finish, except as noted.

Pipe Size	Sch.	OD	ID	t	lb/ft	ALUMINUM
1¼"	40	1.66"	1.38"	.140"	.786	P490
1¼"	40	1.66"	1.38"	.140"	.786	P510*
1¼"	40	1.66"	1.38"	.140"	.786	P491'
1½"	40	1.90"	1.61"	.145"	.940	P540
1½"	40	1.90"	1.61"	.145"	.940	P560*
1½"	40	1.90"	1.61"	.145"	.940	P565'
1½"	80	1.90"	1.50"	.200"	1.286	P582*
1½"	80	1.90"	1.50"	.200"	1.286	P583

*Clear anodized
' Satin anodized

Clear Touch Up Paint

To match Clear Anodized Finishes.

Aerosol
PP204R1-CL

Instructions:

- Locate damaged surface to the most hidden location as possible, i.e., if round material, put scratches toward the bottom.
- Remove high spots very carefully with a hand file.
- Hold paint can approximately 6" away from the object being painted and apply in light coats over damaged area.
- Paint may wear off with normal use. Touchup as needed.

Stainless Steel Pipe

Type 304
Mill or Satin Finish
20' Random Lengths, Except as Noted
† Denotes 18' Lengths

Available in Mill and Satin Finishes.

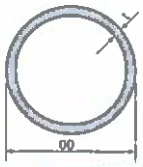

Pipe Size	Sch.	OD	ID	t	lb/ft	MILL STAINLESS	SATIN STAINLESS
¾"	40	1.050"	.824"	.113"	1.141	P702	P702.4
1"	40	1.315"	1.049"	.133"	1.695	P730	P730.4
1¼"	5	1.660"	1.542"	.059"	1.120	P763†	P763.4†
1¼"	10	1.660"	1.442"	.109"	1.810	P3166104†	P3166104.4†
1¼"	40	1.660"	1.380"	.140"	2.294	P792	P792.4
1½"	5	1.900"	1.770"	.065"	1.274	P843†	P843.4†
1½"	10	1.900"	1.682"	.109"	2.085	P3190104†	P3190104.4†
1½"	40	1.900"	1.610"	.145"	2.743	P897	P897.4
2"	40	2.375"	2.067"	.154"	3.687	P960	P960.4

Stainless Steel Pipe

Type 316
Mill or Satin Finish
20' Random Lengths

Pipe Size	Sch.	OD	ID	t	lb/ft	MILL STAINLESS	SATIN STAINLESS
1¼"	10	1.66"	1.442"	.109"	1.810	P3166106	P3166106.4
1¼"	40	1.66"	1.380"	.140"	2.294		P813.4
1½"	10	1.90"	1.682"	.109"	2.085	P3190106	P3190106.4
1½"	40	1.90"	1.610"	.145"	2.743	P911	P911.4

Steel Pipe

Round Black ***Pipe*** A53
Schedule 40
21' Random Lengths

Mill Finish.

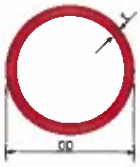

Pipe Size	OD	ID	t	lb/ft	STEEL
¾"	1.050"	.824"	.113"	1.130	P110
1"	1.315"	1.049"	.133"	1.680	P120
1¼"	1.660"	1.380"	.140"	2.270	P135
1½"	1.900"	1.610"	.145"	2.720	P175
2"	2.375"	2.067"	.154"	3.650	P240

ROUGH CARPENTRY

PART 1 - GENERAL

1.1 RELATED DOCUMENTS

A. Drawings and general provisions of the Contract, including General and Supplementary Conditions and Division 1 Specification Sections, apply to this Section.

1.2 SUMMARY

A. This Section includes the following:

1. Framing with dimension lumber.
2. Framing with engineered wood products.
3. Wood blocking and nailers.
4. Sheathing.

B. Related Sections include the following:
1. Division 6 Section "Prefabricated StructuralWood Trusses."

1.3 DEFINITIONS

A. Rough Carpentry: Carpentry work not specified in other Sections and not exposed, unless otherwise indicated.

B. Lumber grading agencies, and the abbreviations used to reference them, include the following:

1. NELMA - Northeastern Lumber Manufacturers Association.
2. NLGA - National Lumber Grades Authority.
3. RIS - Redwood Inspection Service.
4. SPIB - Southern Pine Inspection Bureau.
5. WCLIB - West Coast Lumber Inspection Bureau.
6. WWPA - Western Wood Products Association.

1.4 SUBMITTALS

A. Product Data: For each type of process and factory-fabricated product. Indicate component materials and dimensions and include construction and application details.

1. Include data for wood-preservative treatment from chemical treatment manufacturer and certification by treating plant that treated materials comply with requirements. Indicate type of preservative used, net amount of preservative retained, and chemical treatment manufacturer's written instructions for handling, storing, installing, and finishing treated material.
2. For products receiving a waterborne treatment, include statement that moisture content of treated materials was reduced to levels specified before shipment to Project site.

3. Include copies of warranties from chemical treatment manufacturers for each type of treatment.

B. Material Certificates: For dimension lumber specified to comply with minimum allowable unit stresses. Indicate species and grade selected for each use and design values approved by the American Lumber Standards Committee Board of Review.

1.5 QUALITY ASSURANCE

A. Testing Agency Qualifications: An independent testing agency, acceptable to authorities having jurisdiction, with the experience and capability to conduct the testing indicated, as documented according to ASTM E 548.

B. Source Limitations for Engineered Wood Products: Obtain each type of engineered wood product through one source from a single manufacturer.

1.6 DELIVERY, STORAGE, AND HANDLING

A. Stack lumber, plywood, and other panels; place spacers between each bundle to provide air circulation. Provide for air circulation around stacks and under coverings.

PART 2 - PRODUCTS

2.1 MANUFACTURERS

A. Available Manufacturers: Subject to compliance with requirements, manufacturers offering products that may be incorporated into the Work include, but are not limited to, the following:

1. Laminated-Veneer Lumber:

   a. Azek Building ProductsBoise
   b. Cascade Corporation.
   c. Georgia-Pacific Corporation.
   d. Louisiana-Pacific Corporation.
   e. Pacific Woodtech Corp.
   f. Trus Joist MacMillan.
   g. Union Camp Corp.; Building Products Division.
   h. Willamette Industries, Inc.

2.2 WOOD PRODUCTS, GENERAL

A. Lumber: DOC PS 20 and applicable rules of lumber grading agencies certified by the American Lumber Standards Committee Board of Review.

1. Factory mark each piece of lumber with grade stamp of grading agency.
2. Where nominal sizes are indicated, provide actual sizes required by DOC PS 20 for moisture content specified. Where actual sizes are indicated, they are minimum dressed sizes for dry lumber.
3. Provide dressed lumber, S4S, unless otherwise indicated.

4. Provide dry lumber with 19 percent maximum moisture content at time of dressing for 2-inch nominal (38-mm actual) thickness or less, unless otherwise indicated

B. Engineered Wood Products: Provide engineered wood products acceptable to authorities having jurisdiction and for which current model code research or evaluation reports exist that show compliance with building code in effect for Project.

1. Allowable Design Stresses: Provide engineered wood products with allowable design stresses, as published by manufacturer that meet or exceed those indicated. Manufacturer's published values shall be determined from empirical data or by rational engineering analysis and demonstrated by comprehensive testing performed by a qualified independent testing agency.

2.3 DIMENSION LUMBER

A. General: Provide dimension lumber of grades indicated according to the American Lumber Standards Committee National Grading Rule provisions of the grading agency indicated.

B. Joists, Rafters, and Other Framing Not Listed Above: Construction or No. 2 grade and the following species:
1. Douglas fir-larch (north); NLGA.

2.4 MISCELLANEOUS LUMBER

A. General: Provide lumber for support or attachment of other construction, including the following:
1. Blocking.
2. Nailers.

B. For items of dimension lumber size, provide Construction, Stud, or No. 2 grade lumber with 19 percent maximum moisture content and any of the following species:

1. Mixed southern pine; SPIB.
2. Hem-fir or Hem-fir (north); NLGA, WCLIB, or WWPA.
3. Spruce-pine-fir (south) or Spruce-pine-fir; NELMA, NLGA, WCLIB, or WWPA.
4. Eastern softwoods; NELMA.
5. Northern species; NLGA.
6. Western woods; WCLIB or WWPA.

C. For concealed boards, provide lumber with 19 percent maximum moisture content and any of the following species and grades:

1. Mixed southern pine, No. 2 grade; SPIB.
2. Hem-fir or Hem-fir (north), Construction or 2 Common grade; NLGA, WCLIB, or WWPA.
3. Spruce-pine-fir (south) or Spruce-pine-fir, Standard or 3 Common grade; NELMA, NLGA, WCLIB, or WWPA.
4. Eastern softwoods, Common grade; NELMA.
5. Northern species, Common grade; NLGA.
6. Western woods, Construction or No. 2 Common grade; WCLIB or WWPA.

2.5 SHEATHING

A. Plywood Roof Sheathing: Exterior sheathing.

1. Span Rating: Not less than[**16/0**] **[20/0]** **[24/0]** **[32/16]** **[40/20]** **[48/24]**.
2. Thickness: As indicated.

2.6 FASTENERS

A. General: Provide fasteners of size and type indicated that comply with requirements specified in this Article for material and manufacture.

B. Nails, Brads, and Staples: ASTM F 1667.

C. Power-Driven Fasteners: CABO NER-272.

D. Wood Screws: ASME B18.6.1.

E. Screws for Fastening to Cold-Formed Metal Framing: ASTM C 954, except with wafer heads and reamer wings, length as recommended by screw manufacturer for material being fastened.

F. Lag Bolts: ASME B18.2.1. (ASME B18.2.3.8M).

G. Bolts: Steel bolts complying with ASTM A 307, Grade A (ASTM F 568M, Property Class 4.6); with ASTM A 563 (ASTM A 563M) hex nuts and, where indicated, flat washers.

PART 3 - EXECUTION

3.1 INSTALLATION, GENERAL

A. Set rough carpentry to required levels and lines, with members plumb, true to line, cut, and fitted. Fit rough carpentry to other construction; scribe and cope as needed for accurate fit. Locate nailers, blocking, and similar supports to comply with requirements for attaching other construction.

B. Do not use materials with defects that impair quality of rough carpentry or pieces that are too small to use with minimum number of joints or optimum joint arrangement.

C. Apply field treatment complying with AWPA M4 to cut surfaces of preservative-treated lumber and plywood.

D. Securely attach rough carpentry work to substrate by anchoring and fastening as indicated, complying with the following:

1. CABO NER-272 for power-driven fasteners.
2. Published requirements of metal framing anchor manufacturer.
3. Table 23-II-B-1, "Nailing Schedule," and Table 23-II-B-2, "Wood Structural Panel Roof Sheathing Nailing Schedule," in the Uniform Building Code.
4. Table 2305.2, "Fastening Schedule," in the BOCA National Building Code.
5. Table 2306.1, "Fastening Schedule," in the Standard Building Code.

6. Table 602.3(1), "Fastener Schedule for Structural Members," and Table 602.3(2), "Alternate Attachments," in the International One- and Two-Family Dwelling Code.

E. Use common wire nails, unless otherwise indicated. Select fasteners of size that will not fully penetrate members where opposite side will be exposed to view or will receive finish materials. Make tight connections between members. Install fasteners without splitting wood; predrill as required.

3.2 WOOD BLOCKING, AND NAILER INSTALLATION

A. Install where indicated and where required for attaching other work. Form to shapes indicated and cut as required for true line and level of attached work. Coordinate locations with other work involved.

B. Attach items to substrates to support applied loading. Recess bolts and nuts flush with surfaces, unless otherwise indicated. Build anchor bolts into masonry during installation of masonry work. Where possible, secure anchor bolts to formwork before concrete placement.

3.3 WOOD FRAMING INSTALLATION, GENERAL

A. Framing Standard: Comply with AFPA's "Manual for Wood Frame Construction," unless otherwise indicated.

B. Framing with Engineered Wood Products: Install engineered wood products to comply with manufacturer's written instructions.

C. Do not splice structural members between supports.

D. Where built-up beams or girders of 2-inch nominal- (38-mm actual-) dimension lumber on edge are required, fasten together with 2 rows of 20d (100-mm) nails spaced not less than 32 inches (812 mm) o.c. Locate one row near top edge and other near bottom edge.

1. For continuous members, locate end joints over supports.

3.4 RAFTER FRAMING INSTALLATION

A. Rafters: Notch to fit exterior wall plates and use metal framing anchors. Double rafters to form headers and trimmers at openings in roof framing, if any, and support with metal hangers. Where rafters abut at ridge, place directly opposite each other and nail to ridge member or use metal ridge hangers.

B. Provide special framing as indicated for eaves, overhangs, dormers, and similar conditions, if any.

END OF SECTION

FIRESTOPPING

PART 1 - GENERAL

1.1 RELATED DOCUMENTS

A. Drawings and general provisions of the Contract, including General and Supplementary Conditions and Division 1 Specification Sections, apply to this Section.

1.2 SUMMARY

A. This Section includes firestopping for the following:

1. Penetrations through fire-resistance-rated walls and partitions including both empty openings and openings containing cables, pipes, ducts, conduits, and other penetrating items.

2. Penetrations, and voids at tops of fire-resistance-rated, and non-rated walls and partitions, of the following construction types:

a) Gypsum board assembly walls and partitions.

4. Sealant joints in fire-resistance-rated construction.

B. Related Sections: The following Sections contain requirements that relate to this Section:

1. Division 3 Section "Cast-In-Place Concrete" for construction of openings in concrete slabs.
2. Division 7 Section "Joint Sealants" for non-fire-resistive-rated joint sealants.
3. Division 15 Sections specifying ducts and piping penetrations.
4. Division 16 Sections specifying cable and conduit penetrations.

1.3 SYSTEM PERFORMANCE REQUIREMENTS

A. General: Provide firestopping systems that are produced and installed to resist the spread of fire, according to requirements indicated, and the passage of smoke and other gases.

B. F-Rated Through-Penetration Firestop Systems: Provide through-penetration firestop systems with F ratings indicated, as determined per ASTM E 814, but not less than that equaling or exceeding the fire-resistance rating of the constructions penetrated.

C. T-Rated Through-Penetration Firestop Systems: Provide through-penetration firestop systems with T ratings, in addition to F ratings, as determined per ASTM E 814, where indicated and where systems protect penetrating items exposed to contact with adjacent materials in occupiable floor areas. T-rated assemblies are required where the following conditions exist:

1. Where firestop systems protect penetrations located outside of wall cavities.

2. Where firestop systems protect penetrations located outside fire-resistive shaft enclosures.

3. Where firestop systems protect penetrations located in construction containing doors required to have a temperature-rise rating.
4. Where firestop systems protect penetrating items larger than a 4-inch-diameter nominal pipe or 16 sq. in. in overall cross-sectional area.

D. Fire-Resistive Joint Sealants: Provide joint sealants with fire-resistance ratings indicated, as determined per ASTM E 119, but not less than that equaling or exceeding the fire-resistance rating of the construction in which the joint occurs.

E. For firestopping exposed to view, traffic, moisture, and physical damage, provide products that do not deteriorate when exposed to these conditions.

1. For piping penetrations for plumbing and wet-pipe sprinkler systems, provide moisture-resistant through-penetration firestop systems.

2. For floor penetrations with annular spaces exceeding 4 inches or more in width and exposed to possible loading and traffic, provide firestop systems capable of supporting the floor loads involved either by installing floor plates or by other means.

3. For penetrations involving insulated piping, provide through-penetration firestop systems not requiring removal of insulation.

F. For firestopping exposed to view, provide products with flame-spread values of less than 25 and smoke-developed values of less than 450, as determined per ASTM E 84.

1.4 SUBMITTALS

A. General: Submit the following according to Conditions of the Contract and Division 1 Specification Sections.

B. Product Data for each type of product specified.

C. Shop Drawings detailing materials, installation methods, and relationships to adjoining construction for each through-penetration firestop system, and each kind of construction condition penetrated and kind of penetrating item. Include firestop design designation of qualified testing and inspecting agency evidencing compliance with requirements for each condition indicated.

1. Submit documentation, including illustrations, from a qualified testing and inspecting agency that is applicable to each through-penetration firestop configuration for construction and penetrating items.

2. Where Project conditions require modification of qualified testing and inspecting agency's illustration to suit a particular through-penetration firestop condition, submit illustration approved by firestopping manufacturer's fire protection engineer with modifications marked.

D. Product certificates signed by manufacturers of firestopping products certifying that their products comply with specified requirements.

E. Product test reports from, and based on tests performed by, a qualified testing and inspecting agency evidencing compliance of firestopping with requirements based on comprehensive testing of current products.

F. Qualification data for firms and persons specified in "Quality Assurance" article to demonstrate their capabilities and experience. Include list of completed projects with project names, addresses, names of Architects and Owners, and other information specified.

1.5 QUALITY ASSURANCE

A. Fire-Test-Response Characteristics: Provide firestopping that complies with the following requirements and those specified under the "System Performance Requirements" article:

1. Firestopping tests are performed by a qualified testing and inspecting agency. A qualified testing and inspecting agency is UL, Warnock Hersey, or another agency performing testing and follow-up inspection services for firestop systems that is acceptable to authorities having jurisdiction.

2. Through-penetration firestop systems are identical to those tested per ASTM E 814 under conditions where positive furnace pressure differential of at least 0.01 inch of water is maintained at a distance of 0.78 inch below the fill materials surrounding the penetrating items in the test assembly. Provide rated systems complying with the following requirements:

   a) Through-penetration firestop system products bear classification marking of qualified testing and inspecting agency.

   b) Through-penetration firestop systems correspond to those indicated by reference to through-penetration firestop system designations listed by UL in their "Fire Resistance Directory," by Warnock Hersey, or by another qualified testing and inspecting agency.

3. Fire-resistive joint sealant systems are identical to those tested for fire-response characteristics per ASTM E 119 under conditions where the positive furnace pressure differential is at least 0.01 inch of water, as measured 0.78 inch from the face exposed to furnace fire. Provide systems complying with the following requirements:

   a) Fire-Resistance Ratings of Joint Sealants: As indicated by reference to design designations listed by UL in their "Fire Resistance Directory" or by another qualified testing and inspecting agency.

   b) Joint sealants, including backing materials, bear classification marking of qualified testing and inspection agency.

B. Installer Qualifications: Engage an experienced Installer who has completed firestopping that is similar in material, design, and extent to that indicated for Project and that has performed successfully.

C. Installer Qualifications: Engage an experienced Installer who is certified, licensed, or otherwise qualified by the firestopping manufacturer as having the necessary experience, staff, and training to install manufacturer's products per specified requirements. A manufacturer's willingness to sell its firestopping products to the Contractor or to an Installer engaged by the Contractor does not in itself confer qualification on the buyer.

D. Single-Source Responsibility: Obtain through-penetration firestop systems for each kind of penetration and construction condition indicated from a single manufacturer.

E. Provide firestopping products containing no detectable asbestos as determined by the method specified in 40 CFR Part 763, Subpart F, Appendix A, Section 1, "Polarized Light Microscopy."

F. Coordinating Work: Coordinate construction of openings and penetrating items to ensure that designated through-penetration firestop systems are installed per specified requirements.

G. Preinstallation Conference: Conduct conference at Project site to comply with requirements of Division 1 Section "Project Meetings."

1.6 DELIVERY, STORAGE, AND HANDLING

A. Deliver firestopping products to Project site in original, unopened containers or packages with intact and legible manufacturers' labels identifying product and manufacturer; date of manufacture, lot number, shelf life, if applicable; qualified testing and inspecting agency's classification marking applicable to Project; curing time; mixing instructions for multicomponent materials

B. Store and handle firestopping materials to prevent their deterioration or damage due to moisture, temperature changes, contaminants, or other causes.

1.7 PROJECT CONDITIONS

A. Environmental Conditions: Do not install firestopping when ambient or substrate temperatures are outside limits permitted by firestopping manufacturers or when substrates are wet due to rain, frost, condensation, or other causes.

B. Ventilation: Ventilate firestopping per firestopping manufacturers' instructions by natural means or, where there is inadequate, forced air circulation.

PART 2 - PRODUCTS

2.1 FIRESTOPPING, GENERAL

A. Compatibility: Provide firestopping composed of components that are compatible with each other, the substrates forming openings, and the items, if any, penetrating the firestopping under conditions of service and application, as demonstrated by firestopping manufacturer based on testing and field experience.

B. Accessories: Provide components for each firestopping system that are needed to install fill materials and to comply with "System Performance Requirements" article in Part 1. Use only components specified by the firestopping manufacturer and approved by the qualified testing and inspecting agency for the designated fire-resistance-rating systems. Accessories include but are not limited to the following items:

1. Permanent forming/damming/backing materials including the following:

    a) Semirefractory fiber (mineral wool) insulation.

    b) Sealants used in combination with other forming/damming materials to prevent leakage of fill materials in liquid state.

    c) Fire-rated formboard.

    d) Joint fillers for joint sealants.

2. Temporary forming materials.

3. Substrate primers.

4. Collars.
5. Steel sleeves.

C. Applications: Provide firestopping systems composed of materials specified in this Section that comply with system performance and other requirements.

2.2 FILL MATERIALS FOR THROUGH-PENETRATION FIRESTOP SYSTEMS

A. Intumescent, Latex Sealant: Single-component, intumescent, latex formulation.

B. Products: Subject to compliance with requirements, provide one of the following:

1. Intumescent Latex Sealant:

a) Metacaulk 950, The RectorSeal Corporation.
b) Fire Barrier CP 25WB Caulk, 3M Fire Protection Products.
c) FS-One, Hilti, Inc.

2.3 FIRE-RESISTIVE ELASTOMERIC JOINT SEALANTS

A. Elastomeric Sealant Standard: Provide manufacturer's standard chemically curing, elastomeric sealants of base polymer indicated that complies with ASTM C 920 requirements, including those referenced for Type, Grade, Class, and Uses, and requirements specified in this Section applicable to fire-resistive joint sealants.

B. Sealant Colors: Provide color of exposed joint sealants to comply with the following:

1. Provide selections made by Architect from manufacturer's full range of standard colors for products of type indicated.

C. Single-Component, Neutral-Curing Silicone Sealant: Type S; Grade NS; Class 25; exposure-related Use NT, and joint-substrate-related Uses M, G, A, and (as applicable to joint substrates indicated) O.

D. Single-Component, Nonsag, Urethane Sealant: Type S; Grade NS; Class 25; exposure-related Use NT, M, A, and (as applicable to joint substrates indicated) O.

E. Products: Subject to compliance with requirements, provide one of the following:

1. Single-Component, Neutral-Curing, Urethane Sealant:

a) Isoflex 880 GB, Harry S. Peterson Co., Inc.
b) Isoflex 881, Harry S. Peterson Co., Inc.
c) Vulkem 921, Mameco International Inc.
d) Silkflex – 15LM, Sika Corp.

2. Single-Component, Neutral-Curing, Silicone Sealant:

a) Dow Corning 790, Dow Corning Corp.
b) Dow Corning Firestop Sealant, Dow Corning Corp.

c) Silpruf, General Electric Co.
d) Ultraglaze, General Electric Co.
e) FS 601/604, Hilti, Inc.
f) 864, Pecora Corp.

2.4 MIXING

A. For those products requiring mixing prior to application, comply with firestopping manufacturer's directions for accurate proportioning of materials, water (if required), type of mixing equipment, selection of mixer speeds, mixing containers, mixing time, and other procedures needed to produce firestopping products of uniform quality with optimum performance characteristics for application indicated.

PART 3 - EXECUTION

3.1 EXAMINATION

A. Examine substrates and conditions, with Installer present, for compliance with requirements for opening configurations, penetrating items, substrates, and other conditions affecting performance of firestopping. Do not proceed with installation until unsatisfactory conditions have been corrected.

3.2 PREPARATION

A. Surface Cleaning: Clean out openings and joints immediately prior to installing firestopping to comply with recommendations of firestopping manufacturer and the following requirements:

1. Remove all foreign material from surfaces of opening and joint substrates and from penetrating items that could interfere with adhesion of firestopping.

1. Clean opening and joint substrates and penetrating items to produce clean, sound surfaces capable of developing optimum bond with firestopping. Remove loose particles remaining from cleaning operation.

2. Remove laitance and form release agents from concrete.

B. Priming: Prime substrates where recommended by firestopping manufacturer using that manufacturer's recommended products and methods. Confine primers to areas of bond; do not allow spillage and migration onto exposed surfaces.

C. Masking Tape: Use masking tape to prevent firestopping from contacting adjoining surfaces that will remain exposed upon completion of Work and that would otherwise be permanently stained or damaged by such contact or by cleaning methods used to remove smears from firestopping materials. Remove tape as soon as it is possible to do so without disturbing firestopping's seal with substrates.

3.3 INSTALLING FIRESTOPS AT THROUGH-PENETRATIONS AND VOIDS AT TOPS OF WALLS

A. General: Comply with the "System Performance Requirements" article in Part 1 and the through-penetration firestop manufacturer's installation instructions and drawings pertaining to products and applications indicated.

B. Install forming/damming materials and other accessories of types required to support fill

materials during their application and in the position needed to produce the cross-sectional shapes and depths required achieving fire ratings of designated through-penetration firestop systems. After installing fill materials, remove combustible forming materials and other accessories not indicated as permanent components of firestop systems.

C. Install fill materials for through-penetration firestop systems by proven techniques to produce the following results:

1. Completely fill voids and cavities formed by openings, forming materials, accessories, and penetrating items.

2. Apply materials so they contact and adhere to substrates formed by openings and penetrating items.

3. For fill materials that will remain exposed after completing Work, finish to produce smooth, uniform surfaces that are flush with adjoining finishes.

3.4 INSTALLING FIRE-RESISTIVE JOINT SEALANTS

A. General: Comply with the "System Performance Requirements" article in Part 1, with ASTM C 1193, and with the sealant manufacturer's installation instructions and drawings pertaining to products and applications indicated.

B. Install joint fillers to provide support of sealants during application and at position required to produce the cross-sectional shapes and depths of installed sealants relative to joint widths that allow optimum sealant movement capability and develop fire-resistance rating required.

C. Install sealants by proven techniques that result in sealants directly contacting and fully wetting joint substrates, completely filling recesses provided for each joint configuration, and providing uniform, cross-sectional shapes and depths relative to joint width that optimum sealant movement capability. Install sealants at the same time joint fillers are installed.

D. Tool nonsag sealants immediately after sealant application and prior to the time skinning or curing begins. Form smooth, uniform beads of configuration indicated or required to produce fire-resistance rating, as well as to eliminate air pockets, and to ensure contact and adhesion of sealants with sides of joint. Remove excess sealant from surfaces adjacent to joint. Do not use tooling agents that discolor sealants or adjacent surfaces or are not approved by sealant manufacturer.

3.5 CLEANING

A. Clean off excess fill materials and sealants adjacent to openings and joints as work progresses by methods and with cleaning materials approved by manufacturers of firestopping products and of products in which opening and joints occur.

B. Protect firestopping during and after curing period from contact with contaminating substances or from damage resulting from construction operations or other causes so that they are without deterioration or damage at time of Substantial Completion. If, despite such protection, damage or deterioration occurs, cut out and remove damaged or deteriorated firestopping immediately and install new materials to produce firestopping complying with specified requirements.

END OF SECTION

FIBERGLASS SHINGLES

Part 1 – GENERAL

RELATED DOCUMENTS

Drawings and general provisions of the Contract, including General and Supplementary Conditions and Division-1 Specification sections, apply to this section.

1.01 SUMMARY

A. This section includes architectural fiberglass shingles for steep roofs.

B. Related Sections: The following Sections contain requirements that relate to this Section:

1. Division 6 Section "Rough Carpentry" for wood sheathing and framing.
2. Division 7 Section "Flashing and Sheet Metal" for metal valley flashing, step flashing, drip edges, and other sheet metal work.

1.02 SUBMITTALS

A. General: Submit each item in this Article according to the Conditions of the Contract and Division 1 Specification Sections.

B. Product data for each type of product specified, including details of construction relative to materials, dimensions of individual components, profiles, textures, and colors.

C. Samples for initial selection in the form of manufacturer's sample finishes showing the full range of colors and profiles available for each type of asphalt shingle indicated.

D. Samples for verification in the form of 2 full-size units of each type of architectural fiberglass shingle indicated showing the full range of variations expected in these characteristics.

1.03 QUALITY ASSURANCE

A. Fire-Test-Response Classification: Where products with a fire-test-response classification are specified, provide fiberglass shingles identical to those tested according to ASTM E 108 or UL 790 and listed by UL or another testing and inspecting agency acceptable to authorities having jurisdiction. Identify each bundle of fiberglass shingles with appropriate markings indicating fire-test-response classification of applicable testing and inspecting agency.

B. Mockup: Prior to installing shingles, contruct mockups to verify selections made under sample submittals and to demonstrate aesthetic effects as well as quality of materials and execution. Build mockups to comply with the following requirements, using materials indicated for final Work.

1. Locate mockups on site in the location and of the size indicated or, if not indicated, as directed by Architect.
2. Demonstrate the proposed range of aesthetic effects and workmanship.
3. Obtain Architect's approval of mockups before start of final unit of Work.

    a. Accepted mockups in an undisturbed condition at the time of Substantial Completion may become part of the completed Work.

1.04 DELIVERY, STORAGE, AND HANDLING

A. Deliver materials to Project site in manufacturer's unopened bundles or containers with labels intact.

B. Handle and store materials at Project site to prevent water damage, staining, or other physical damage. Store roll goods on end. Comply with manufacturer's recommendations for job-site storage, handling, and protection.

1.05 ROJECT CONDITIONS

A. Weather Limitations: Proceed with installing architectural fiberglass shingles only when existing and forecasted weather conditions will permit work to be performed according to manufacturers' recommendations and warranty requirements, and when substrate is completely dry.

1.06 WARRANTY

A. General Warranty: The special warranty specified in this Article shall not deprived the Owner of other rights the Owner may have under other provisions of the Contract Documents and shall be in addition to, and run concurrent with, other warranties made by the Contractor under requirements of the Contract Documents.

B. Special Warranty: Submit a written warranty signed by manufacturer agreeing to repair or replace architectural fiberglass shingles that fail in materials or workmanship within the specified warranty period. Failures include, but are not limited to, deformation or deterioration of architectural fiberglass shingles beyond normal weathering.

1. Warranty Period: Manufacturer's standard but not less than 30 years after date of Substantial Completion.

1.07 XTRA MATERIALS

A. Furnish extra materials described below that match products installed, are packaged with protective covering for storage, and are identified with labels clearly describing contents.

1. Furnish 1 square (9.29 sq. m) coverage of architectural fiberglass shingles, identical to those to be installed, in unbroken bundles.

Part 2 – PRODUCTS

2.01 MANUFACTURERS

A. Manufacturers: Subject to compliance with requirements, provide architectural fiberglass shingles produced by one of the following:

1. Owens Corning.
2. Certain Teed Corporation.
3. GAF Building Materials Corporation.

B. Available Products: Subject to compliance with requirements, products that may be incorporated in the Work include, but are not limited to, the following:

1. Waterproof Underlayment:

    a. WinterGuard; Certain Teed Corporation.
    b. Bituthene Ice and Water Shield; Grace: W.R. Grace & Co.
    c. Nordshield Ice and WaterGard; Nord Bitumi US, Inc.

2.02 ARCHITECTURAL FIBERGLASS SHINGLES

A. Colors, Blends, and Patterns: Where manufacturer's standard products are indicated, provide architectural fiberglass shingles with the following requirements:

    1. Provide Architect's selections from manufacturer's full range of colors, textures, and patterns for architectural fiberglass shingles of type indicated.

B. Architectural Style, Fiberglass Strip Shingles: 300 lb./sq., mineral-surfaced, self-sealing, 5-tab, fiberglass-based, strip asphalt shingles, complying with both ASTM D 3018, Type I, and ASTM D 3462. Provide shingles with a Class A fire-test-response classification that passes the wind-resistance-test requirements of ASTM D 3161.

    1. Fungus Resistant: Provide shingles that have been surface treated to remain free of fungus and algae growth, which adversely affects the appearance of the roof, for at least 5 years.

C. Hip and Ridge Shingles: Manufacturer's standard, factory-precut units to match architectural fiberglass shingles.

D. Products: Subject to compliance with requirements, provide one of the following:

2.03 ACCESSORIES

A. Felt Underlayment: Type I, 36-inch-wide, asphalt-saturated organic felt, complying with ASTM D 226 (No. 15) or ASTM D 4869.

B. Waterproof Underlayment: Minimum 40-mil-thick, self-adhering, polymer-modified, bituminous sheet membrane, complying with ASTM D 1970. Provide primer when recommended by underlayment manufacturer.

C. Asphalt Plastic Cement: Non-asbestos fibrated asphalt cement, complying with ASTM D 4586.

D. Nails: Aluminum or hot-dip galvanized steel, 0.120-inch-diameter barbed shank, sharp-pointed, conventional roofing nails with a minimum 3/8-inch-diameter head and of sufficient length to penetrate ¾ inch into solid decking or at least 1/8 inch through plywood sheathing.

    1. Where nails are in contact with flashing, prevent galvanic action by providing nails made from the same metal as that of the flashing.
    2. Staples are not permitted.

E. Vent Pipe Flashing: Self sealing elastomeric collar attached to aluminum skirt matching slope of roof and extending at least 4 inches from pipe onto roof.

    1. Product: Model No. 12110, Manufactured by ARFCO, One Enterprise Road, Billerca, MA 01821 1-800-338-1865 (Fax) 508-663-6504 or accepted equal subject to compliance with requirements.

Part 3 – EXECUTION

3.01 EXAMINATION

A. Examine substrates for compliance with requirements for substrates, installation tolerances, and other conditions affecting performance of asphalt shingles. Do not proceed with installation until unsatisfactory conditions have been corrected.

3.02 REPARATION

A. Clean substrate of projections and substances detrimental to application. Cover knotholes or other minor voids in substrate with sheet metal flashing secured with noncorrosive roofing nails.

B. Coordinate installation with flashings and other adjoining work to ensure proper sequencing. Do not install roofing materials until all vent stacks and other penetrations through roof sheathing have been installed and are securely fastened against movement.

3.03 INSTALLATION

A. General: Comply with manufacturer's instructions and recommendations but not less than those recommended by ARMA's "Residential Asphalt Roofing Manual" or "The NRCA Steep Roofing Manual."

1. Fasten fiberglass shingles to roof sheathing with nails.

B. Felt Underlayment 30#t: Apply 1 layer of felt underlayment horizontally over entire surface to receive fiberglass shingles, lapping succeeding courses a minimum of 2 inches (50 mm), end laps a minimum of 4 inches (100 mm), and hips and valleys a minimum of 6 inches (150 mm). Fasten felt with sufficient number of roofing nails or noncorrosive staples to hold underlayment in place until fiberglass shingle installation.

1. Apply an additional layer of felt underlayment on roof decks with a slope of 2 to 4 inches per foot (1:6 to 1:3).
2. Omit felt underlayment at areas of waterproof underlayment. Lap felt underlayment over waterproof underlayment as recommended by manufacturer but not less than 2 inches.

C. Waterproof Underlayment: Apply waterproof underlayment at eaves. Cover deck from eaves at least 24 inches (600 mm) inside exterior wall line.

1. In addition to eaves, apply waterproof underlayment in place of felt underlayment at valleys, 18" on each side continuous.

D. Vent Pipe Flashing: Install vent pipe flashings according to manufacturer's instructions.

E. Metal Open Valleys: Comply with ARMA and NRCA recommendations. Install a second felt underlayment shingle lapped at least 12 inches and sealed with plastic asphalt cement. Install a metal valley shingle lapped at least 9 inches and sealed with plastic asphalt cement.

F. Install architectural fiberglass shingles, beginning at roof's lower edge, with a starter strip of roll roofing or inverted fiberglass shingles with tabs removed. Fasten fiberglass shingles in the desired weather exposure pattern; use number of fasteners per shingle as recommended by manufacturer. Use vertical and horizontal chalk lines to ensure straight coursing.

1. Cut and fit 3architectural fiberglass shingles at valleys, ridges, and edges to provide

maximum weather protection. Provide same weather exposure at ridges as specified for roof. Lap fiberglass shingles at ridges to shed water away from direction of prevailing wind.

2. Use fasteners at ridges of sufficient length to penetrate sheathing as specified.

3. Pattern: 1/3 shingle spacing offset at succeeding courses.

4. Cap hips and ridges with individual ridge shingles, maintaining 5-inch weather exposure. Place to avoid exposed nails.

G. Ridge Vents: Install ridge vents according to manufacturer's instructions.

3.04 ADJUSTING

A. Replace any damaged materials installed under this Section with new materials that meet specified requirements.

END OF SECTION

SHEET METAL AND FLASHING TRIM

PART 1 - GENERAL

1.1 RELATED DOCUMENTS

A. Drawings and general provisions of the Contract, including General and Supplementary Conditions and Division 1 Specification Sections, apply to this Section.

1.2 SUMMARY

A. This Section includes sheet metal flashing and trim in the following categories:

1. Exposed trim, drip edge, gravel stops, and fascia.
2. Metal flashing.
3. Gutters and downspouts.
4. Reglets.

B. Related Sections: The following Sections contain requirements that relate to this Section:

1. Division 7 Section "Joint Sealants" for elastomeric sealants.
2. Division 15, Section for overhead-piping safety pans.

1.3 PERFORMANCE REQUIREMENTS

A. General: Install sheet metal flashing and trim to withstand wind loads, structural movement, thermally induced movement, and exposure to weather without failing.

B. Fabricate and install flashings at roof edges to comply with recommendations of FM Loss Prevention Data Sheet 1-49 for the following wind zone:

1. Wind Zone 2: Wind pressures of 31 to 45 psf.

1.4 SUBMITTALS

A. General: Submit each item in this Article according to the Conditions of the Contract and Division 1 Specification Sections.

B. Product Data including manufacturer's material and finish data, installation instructions, and general recommendations for each specified flashing material and fabricated product.

C. Shop Drawings of each item specified showing layout, profiles, methods of joining, and anchorage details.

D. Samples of sheet metal flashing, trim, and accessory items, in the specified finish. Where finish involves normal color and texture variations, include Sample sets composed of 2 or more units showing the full range of variations expected.

1. 8-inch- square Samples of specified sheet materials to be exposed as finished surfaces.
2. 8-inch- long Samples of factory-fabricated products exposed as finished Work. Provide complete with specified factory finish.

E. Qualification data for firms and persons specified in the "Quality Assurance" Article to demonstrate their capabilities and experience. Include lists of completed projects with project names and addresses, names and addresses of architects and owners, and other information specified.

1.5 QUALITY ASSURANCE

A. Installer Qualifications: Engage an experience Installer who has completed sheet metal flashing and trim work similar in material, design, and extent to that indicated for this Project and with a record of successful in-service performance.

1.6 PROJECT CONDITIONS

A. Coordinate Work of this Section with interfacing and adjoining Work for proper sequencing of each installation. Ensure best possible weather resistance, durability of Work, and protection of materials and finishes.

PART 2 - PRODUCTS

2.1 METALS

A. Aluminum: Alloy and temper recommended by aluminum producer and finisher for type of use and finish indicated and with not less than the strength and durability of alloy and temper designated below:

1. Factory-Painted Aluminum Sheet: ASTM B 209, 3003-H14, with a minimum thickness of 0.040 inch, unless otherwise indicated.
2. Extruded Aluminum: ASTM B 221, alloy 6063-T52, with a minimum thickness of 0.080 inch for primary legs of extrusions that are anodized, unless otherwise indicated.

2.2 REGLETS

A. General: Units of type, material, and profile indicated, formed to provide secure interlocking of separate reglet and counterflashing pieces and compatible with flashing indicated.

B. Masonry Type: Provide with offset top flange fro embedment in masonry mortar joint.

C. Flexible Flashing Retainer: Provide resilient plastic or rubber accessory to secure flexible flashing in reglet where clearance does not permit use of standard metal counterflashing or where Drawings show reglet without metal counterflashing.

D. Counterflashing Wind-Restraint Clips: Provide clips to be installed before counterflashing to prevent wind uplift of the counterflashing lower edge.

1. Material: Aluminum, 0.024 inch thick.

2.3 MISCELLANEOUS MATERIALS AND ACCESSORIES

A. Fasteners: Same metal as sheet metal flashing or other noncorrosive metal as recommended by sheet metal manufacturer. Match finish of exposed heads with material being fastened.

B. Asphalt Mastic: SSPC-Paint 12, solvent-type asphalt mastic, nominally free of sulfur and containing no asbestos fibers, compounded for 15-mil dry film thickness per coat.

C. Mastic Sealant: Polyisobutylene; nonhardening, nonskinning, nondrying, nonmigrating sealant.

D. Elastomeric Sealant: Generic type recommended by sheet metal manufacturer and fabricator of components being sealed and complying with requirements for joint sealants as specified in Division 7 Section "Joint Sealants."

E. Epoxy Seam Sealer: 2-part, noncorrosive, aluminum seam-cementing compound, recommended by aluminum manufacturer for exterior and interior nonmoving joints, including riveted joints.

F. Adhesives: Type recommended by flashing sheet metal manufacturer for waterproof and weather-resistant seaming and adhesive application of flashing sheet metal.

G. Paper Slip Sheet: 5-lb/square red rosin, sized building paper conforming to FS UU-B-790, Type I, Style 1b.

H. Metal Accessories: Provide sheet metal clips, straps, anchoring devices, and similar accessory units as required for installation of Work, matching or compatible with material being installed; noncorrosive; size and thickness required for performance.

I. Roofing Cement: ASTM D 4586, Type I, asbestos free, asphalt based.

2.4 FABRICATION, GENERAL

A. Sheet Metal Fabrication Standard: Fabricate sheet metal flashing and trim to comply with recommendations of SMACNA's "Architectural Sheet Metal Manual" that apply to the design, dimensions, metal, and other characteristics of the item indicated.

B. Comply with details shown to fabricate sheet metal flashing and trim that fit substrates and result in waterproof and weather-resistant performance once installed. Verify shapes and dimensions of surfaces to be covered before fabricating sheet metal.

C. Form exposed sheet metal Work that is without excessive oil canning, buckling, and tool marks and that is true to line and levels indicated, with exposed edges folded back to form hems.

D. Seams: Fabricate nonmoving seams in aluminum with flat-lock seams. Form seams and seal with epoxy seam sealer. Rivet joints for additional strength.

E. Expansion Provisions: Space movement joints at maximum of 10 feet with no joints allowed within 24 inches of corner or intersection. Where lapped or bayonet-type expansion provisions in Work cannot be used or would not be sufficiently weatherproof and waterproof, form expansion joints of intermeshing hooked flanges, not less than 1 inch deep, filled with mastic sealant (concealed within joints).

F. Sealed Joints: Form nonexpansion, but movable, joints in metal to accommodate elastomeric sealant to comply with SMACNA standards.

G. Separate metal from noncompatible metal or corrosive substrates by coating concealed surfaces at locations of contact with asphalt mastic or other permanent separation as recommended by manufacturer.

H. Conceal fasteners and expansion provisions where possible. Exposed fasteners are not allowed on faces of sheet metal exposed to public view.

I. Fabricate cleats and attachment devices from same material as sheet metal component being anchored or from compatible, noncorrosive metal recommended by sheet metal manufacturer.

1. Size: As recommended by SMACNA manual or sheet metal manufacturer for application but never less than thickness of metal being secured.

2.5 SHEET METAL FABRICATIONS

A. General: Fabricate sheet metal items in thickness or weight needed to comply with performance requirements but not less than that listed below for each application and metal.

B. Gutters: Fabricate from the following material:

1. Aluminum: 0.040 inch thick.

C. Downspouts: Fabricate from the following material:

1. Aluminum: 0.040 inch thick.

D. Splash Pans: Fabricate from the following material:

1. Precast concrete.

E. Exposed Trim, Gravel Stops, and Fasciae: Fabricate from the following material:

1. Aluminum: 0.050 inch thick.

F. Base Flashing: Fabricate from the following material:

1. Aluminum: 0.040 inch thick.

G. Counterflashing: Fabricate from the following material:

1. Aluminum: 0.0320 inch thick.

H. Flashing Receivers: Fabricate from the following material:

1. Aluminum: 0.0320 inch thick.

I. Drip Edges: Fabricate from the following material:

1. Aluminum: 0.0320 inch thick.

J. Eave Flashing: Fabricate from the following material:

1. Aluminum: 0.0320 inch thick.

K. Roof-Penetration Flashing: Fabricate from the following material, unless otherwise noted:

1. EPDM compression molded rubber. Provide with flexible aluminum base and stainless steel clamp ring.

L. Overhead-Piping Safety Pans: See Division 15, Mechanical.

2.6 ALUMINUM EXTRUSION FABRICATIONS

A. Aluminum Extrusion Units: Fabricate extruded-aluminum running units with formed or extruded-aluminum joint covers for installation behind main members where possible. Fabricate mitered and welded corner units.

2.7 ALUMINUM FINISHES

A. General: Comply with Aluminum Association's (AA) "Designation System for Aluminum Finishes" for finish designations and application recommendations.

B. High-Performance Organic Coating Finish: AA-C12C42R1x (Chemical Finish: cleaned with inhibited chemicals; Chemical Finish: acid chromate-fluoride-phosphate conversion coating; Organic Coating: as specified below). Prepare, pretreat, and apply coating to exposed metal surfaces to comply with coating and resin manufacturer's instructions.

1. Fluoropolymer 2-Coat Coating System: Manufacturer's standard 2-coat, thermocured system composed of specially formulated inhibitive primer and fluoropolymer color topcoat containing not less than 70 percent polyvinylidene fluoride resin by weight; complying with AAMA 605.2.

a. Color and Gloss: Match Architect's sample.

PART 3 - EXECUTION

3.1 EXAMINATION

A. Examine substrates and conditions under which sheet metal flashing and trim are to be installed and verify that Work may properly commence. Do not proceed with installation until unsatisfactory conditions have been corrected.

3.2 INSTALLATION

A. General: Unless otherwise indicated, install sheet metal flashing and trim to comply with performance requirements, manufacturer's installation instructions, and SMACNA's "Architectural Sheet Metal Manual." Anchor units of Work securely in place by methods indicated, providing for thermal expansion of metal units; conceal fasteners where possible, and set units true to line and level as indicated. Install Work with laps, joints, and seams that will be permanently watertight and weatherproof.

B. Install exposed sheet metal Work that is without excessive oil canning, buckling, and tool marks and that is true to line and levels indicated, with exposed edges folded back to form hems. Install sheet metal flashing and trim to fit substrates and to result in waterproof and weather-resistant performance. Verify shapes and dimensions of surfaces to be covered before fabricating sheet metal.

C. Roof-Edge Flashings: Secure metal flashings at roof edges according to FM Loss Prevention Data Sheet 1-49 for specified wind zone.

D. Expansion Provisions: Provide for thermal expansion of exposed sheet metal Work. Space movement joints at maximum of 10 feet with no joints allowed within 24 inches of corner or intersection. Where lapped or bayonet-type expansion provisions in Work cannot be used or would not be sufficiently weatherproof and waterproof, form expansion joints of intermeshing hooked flanges, not less than 1 inch deep, filled with mastic sealant (concealed within joints).

E. Sealed Joints: Form nonexpansion, but movable, joints in metal to accommodate elastomeric sealant to comply with SMACNA standards. Fill joint with sealant and form metal to completely conceal sealant.

F. Seams: Fabricate nonmoving seams in aluminum with flat-lock seams. Form seams and seal with epoxy seam sealer. Rivet joints for additional strength.

G. Separations: Separate metal from noncompatible metal or corrosive substrates by coating concealed surfaces, at locations of contact, with asphalt mastic or other permanent separation as recommended by manufacturer.

1. Underlayment: Where installing aluminum directly on cementitious or wood substrates, install a slip sheet of red-rosin paper and a course of polyethylene underlayment.
2. Bed flanges of Work in a thick coat of roofing cement where required for waterproof performance.

H. Install reglets to receive counterflashing according to the following requirements:

1. Where reglets are shown in masonry, furnish reglets for installation under Division 4 Section "Unit Masonry."

I. Counterflashings: Coordinate installation of counterflashings with installation of assemblies to be protected by counterflashing. Install counterflashings in reglets or receivers. Secure in a waterproof manner by means of snap-in installation and sealant, lead wedges and sealant, interlocking folded seam, or blind rivets and sealant. Lap counterflashing joints a minimum of 2 inches and bed with sealant.

J. Roof-Drainage System: Install drainage items fabricated from sheet metal, with straps, adhesives, and anchors recommended by SMACNA's Manual or the item manufacturer, to drain roof in the most efficient manner. Coordinate roof-drain flashing installation with roof-drainage system installation. Coordinate flashing and sheet metal items for steep-sloped roofs with roofing installation.

K. Overhead-Piping Safety Pans: Suspend pans from pipe and install drain line to plumbing waste or drain line.

L. Roof-Penetration Flashing: Coordinate roof-penetration flashing installation with roofing and installation of items penetrating roof. Install flashing as follows:

1. Seal and clamp flashing to pipes penetrating roof.

M. Splash Pans: Install at base of downspouts.

3.3 CLEANING AND PROTECTION

A. Clean exposed metal surfaces, removing substances that might cause corrosion of metal or deterioration of finishes.

B. Provide final protection and maintain conditions that ensure sheet metal flashing and trim Work during construction is without damage or deterioration other than natural weathering at the time of Substantial Completion.

END OF SECTION

JOINT SEALERS

PART 1 – GENERAL

1.1 DESCRIPTION OF WORK

A. Provide all joint sealer Work as indicated on the Drawings, as required for the completed Work, and as specified herein. The Work shall include, but shall not be limited to, the following:

1. Vertical joints between metal door trim, display boards, display cases, panel boards and wainscots and other facing materials.

2. Vertical control joints and expansion joints.

3. Exterior frames at metal windows, metal door frames, metal subframes, and at other junctures of different materials.

4. Joints in walks, pavements and curbs.

1.2 RELATED SECTIONS

A. Section 03300 - Cast-in-Place Concrete

B. Section 04810 - Unit Masonry Assemblies

C. Section 08110 - Steel Doors and Frames

D. Section 08550 - Wood Windows

E. Section 09260 - Gypsum Board Assemblies

F. Section 09511 - Suspended Acoustical Ceilings

1.3 REFERENCES

A. American Society for Testing and Materials (ASTM)

1.4 SUBMITTALS

A. Product Data

1. Catalog sheets, specifications, and installation instructions for each product specified except miscellaneous materials.

B. Samples

1. Sealants: One pint or standard tube.
2. Joint Fillers: 24" long full section.
3. Gaskets: 24" long full section.
4. Joint Primer/Sealer/Conditioners: One pint.
5. Backer Rods: 24" long full section.
6. Bond Breaker Tape: 24" long full section.

C. Quality Control Submittals

1. Installer's Qualifications Data: Affidavit required under Quality Assurance Article.
2. Company Field Advisor Data: Name, business address, and telephone number of Company Field Advisor.

1.5 QUALITY ASSURANCE

A. Installer's Qualifications: The persons installing the sealants and their supervisor shall be personally experienced in the installation of sealants and shall have been regularly employed by a company engaged in the installation of sealants for a minimum of two years.

1. Furnish to the Authority the names and addresses of five similar projects which the foregoing people have worked on during the past two years.
2. Furnish a letter from the sealant manufacturer, stating that the foregoing people are authorized to install the manufacturer's sealant materials and that the manufacturer's specifications are applicable to the requirements of this Project.

B. Container Labels: Include manufacturer's name, trade name of product, kind of material, federal specification number (if applicable), expiration date (if applicable), and packaging date or batch number.

1.6 DELIVERY, STORAGE, AND HANDLING

A. Deliver, store, and handle joint sealer materials as recommended by the Manufacturer, to protect from damage.

1.7 PROJECT CONDITIONS

A. Environmental Requirements

1. Temperature: Unless otherwise approved or recommended in writing by the sealant manufacturer, do not install sealants at temperatures below 40 degrees F or above 85 degrees F.

2. Humidity and Moisture: Do not install the Work of this Section under conditions that are detrimental to the application, curing, and performance of the materials.

3. Ventilation: Provide sufficient ventilation wherever sealants, primers, and other similar materials are installed in enclosed spaces. Follow manufacturer's recommendations.

B. Protection

1. Protect all surfaces adjacent to sealants with non-staining removable tape or other approved covering to prevent soiling or staining.

2. Protect all other surfaces in the Work area with tarps, plastic sheets, or other approved covering to prevent defacement from droppings.

PART 2 - PRODUCTS

2.1 MANUFACTURERS

A. General Electric Co., Waterford, NY 12188

B. Dow Corning Corp., Midland, Michigan 48686

C. Pecora Corp., Harleyville, PA

D. ChemRex Inc. - Sonneborn, Shakopee, MN 55379

E. Tremco Sealing and Coatings,Wading River, NY 11792

F. Bostik, Midland, MA 01949

G. Protective Treatments, Inc.(PTI), Dayton, OH 45413

H. Products Research & Chemical Corp., Gloucester City, NJ 08030

I. Sika, Lindhurst, NJ 07071

J. Mameco International, Inc./RPM , Cleveland, Ohio 44128

2.2 SEALANTS

A. **Type 1 Sealant**: (for use in vertical expansion joints where extensive movement occurs; for general purpose use around windows, door frames, louvers, and other junctures).

1. One-part low-medium modulus silicone sealant (plus or minus 50% movement); ASTM C920 classifications type S, grade NS, class 25, uses NT, M, G, and A.

   a. General Electric Silpruf, Dow Corning's 791, Pecora's 864, Sonneborn's Omniseal, or Tremco Spectrem 2.

2. Silicones shall meet the following requirements:

   a. ASTM C719 - Low-Medium Modulus (+ or - 50%). Sealants shall not exhibit any cracking or surface degradation after 5000 hours exposure in the Atlas Twin Arc Weatherometer.

   b. ASTM C661 - Shall not incur a durometer increase greater than 10 points.

   c. Sealants shall contain zero parts of toxic isocyanurate ingredients.

3. Thoroughly clean surfaces on which sealant is to be applied and prime surfaces as recommended by Manufacturer before applying sealant.

B. **Type 1A Sealant**: (for use for pavements, walks, and curbs)

1. For Horizontal Joints: Two-part, self-leveling polyurethane sealant for traffic bearing construction; ASTM C920 classifications type M, grade P, class 25, uses T, M, A, and O (granite).

   a. Mameco's Vulkem 255, Pecora's Urexpan NR-200, or Bostik's Chem-Calk 550, Products Research & Chemical's RC-2SL, or Tremco THC 900/901.

2. For Vertical Joints: Two-part, non-sag polyurethane sealant; ASTM C920 classifications type M, grade NS, class 25, uses NT, M, A and O (granite).

a. Mameco's Vulkem 227, Pecora's Dynatrol II, or Bostik's Chem-Calk 500, Products Research & Chemical's RC-2, or Tremco Dymeric 511.

C. **Type 1B Sealant**: (for Plaza Decks)

1. For Horizontal Joints: One-part, self-leveling polyurethane sealant for traffic bearing construction.

a. Mameco's Vulkem 45, Pecora's Urexpan NR-201, or Sika's Sikaflex-12SL, Products Research & Chemical's PR-6006, or Tremco Tremflex.

2. For Vertical Joints: One-part, non-sag polyurethane sealant; ASTM C920 classifications type S, grade NS, class 25, uses NT, M, A and O (granite).

a. Mameco's Vulkem 116, Pecora's Dynatrol I, or Sika's Sikaflex 1a, Products Research & Chemical's RC-1, or Tremco Dymonic.

D. **Type 1C Sealant**: (use at interior wet areas only-- Bath and Shower areas)

1. One-part, mildew resistant silicone sealant; ASTM C920 classifications type S, grade NS, class 25, uses NT, M, G and A.

a. Dow Corning's 786, General Electric's Sanitary 1700, Bostik's Silicone Rubber Bathroom Caulk, or Tremco Proglaze.

E. **Type 2 Sealant**: (for joints & cracks 1/4" or less in width)

1. One-part acrylic polymer sealant

a. Pecora's 60+ Unicrylic, PTI's 738, or Tremco's Mono.

F. **Type 2A Sealant**: (joints & cracks 1/4" or less in width).

1. One-part clear acrylic sealant for sealing small joints

a. PTI's 200 or Tremco's 830.

G. **Type 3 Sealant**: (for concealed bedding only).

1. One-part butyl rubber sealant

a. Pecora's BC-158, PTI's 707, Bostik's Chem-Calk 300, or Tremco Butyl.

H. **Type 4 Sealant**: (use at high temperature applications, e.g., flues)

1. One-part silicone sealant for high temperature; ASTM C920 classifications type S, grade NS, class 25, uses NT, M, G, and A.

a. Dow Corning's Silastic 726 RTV, General Electric's RTV 106, or Tremco Spectrem 1.

I. **Type 5 Sealant**: (use at relieving angles - between brick and asphalt-impregnated

fabric/copper flashing).

1. One-part polyurethane sealant; ASTM C920 classifications type S, grade NS, class 25, uses NT, M, and A.

   a. Only Bostik's Chem Calk 900 or Tremco's Dymonic will be acceptable.

J. Pre-formed Sealant

1. Bitumen impregnated flexible polyurethane foam precompressed to 20% of its uncompressed length such as Progress Unlimited's Compriband. Consult with manufacturer for proper sizing of material.

K. Sealant Colors

1. For exposed materials, provide color as indicated or, if not indicated, as selected by the Project Architect from manufacturer's standard colors. For concealed materials, provide the natural color which has the best overall performance characteristics.

2.3 JOINT FILLERS

A. Closed Cell Neoprene Joint Filler (for precast panel joints not compatible with Silicone Sealants): ASTM D 1056, Class SC (oil resistant and medium swell), 2 to 5 psi compression deflection.

B. Expanded Polyethylene Joint Filler (for existing joints): Flexible, compressible, closed-cell polyethylene of not less than 10 psi compression deflection (25 percent).

C. Closed-Cell Polyurethane or Closed-Cell Expanded polyethylene Joint Filler (for all cast-in-place concrete work): Resilient, compressible, semi-rigid.

1. W.R. Meadow's Ceramar; A.C. Horn's Closed Cell Plastic Foam Filler, Code 5401; Sonneborn's Sonoflex F.

D. ASTM D1056, Class RE41 (for masonry joints) where shown on the Drawings.

E. Filler Sealant (for Parapet Expansion Joints): Polybutylene impregnated compressible polyurethane foam precompressed to 50% of its uncompressed length.

1. "Polytite" by Polytite Manufacturing Corp. and distributed by W.R. Grace Co.

2.4 ACOUSTICAL SEALANT

A. Acoustical Sealant for Exposed and Concealed Joints: Manufacturer's standard nonsag, paintable, nonstaining latex sealant complying with ASTM C 834 and the following requirements:

1. Product is effective in reducing airborne sound transmission through perimeter joints and openings in building construction as demonstrated by testing representative assemblies per ASTM E 90.

1. Product has flame-spread and smoke developed ratings of less than 25 per ASTM E 84.

B. Products: Subject to compliance with requirements, provide one of the following:

1. Acoustical Sealant:

   a) AC-20 FTR Acoustical and Insulation Sealant, Pecora Corp.
   b) SHEETROCK Acoustical Sealant, United States Gypsum Co.
   c) FS-One, Hilti, Inc.

C. Locations: Voids at top of non-rated walls and partitions and penetrations through non-rated walls and partitions.

2.5 MISCELLANEOUS MATERIALS

A. Joint Primer/Sealer/Conditioner: As recommended by the sealant manufacturer for the particular joint surface materials and conditions.

B. Backer Rod: Compressible rod stock of expanded, extruded closed-cell polyethylene.

C. Bond Breaker Tape: Polyethylene or other plastic tape as recommended by the sealant manufacturer; non-bonding to sealant; self-adhesive where applicable.

D. Cleaning Solvents: Oil free solvents as recommended by the sealant manufacturer. Do not use reclaimed solvents.

E. Masking Tape: Removable paper or fiber tape, self-adhesive, non-staining.

PART 3 - EXECUTION

3.1 EXAMINATION

A. Examine all joint surfaces for conditions that may be detrimental to the performance of the completed Work. Do not proceed until satisfactory corrections have been made.

3.2 PREPARATION

A. Clean joint surfaces immediately before installation of sealant and other materials specified in this Section.

   1. Remove all loose materials, dirt, dust, rust, oils and other foreign matter that will impair the performance of materials installed under this Section.

   2. Remove lacquers, protective coatings and similar materials from joint faces with manufacturer's recommended solvents.

   3. Do not limit cleaning of joint surfaces to solvent wiping. Use methods such as grinding, acid etching or other approved and manufacturer's recommended means, if required, to clean the joint surfaces, assuring that the sealant materials will obtain positive and permanent adhesion.

B. For Pavements, Walks, and Curbs

   1. Set joint fillers at proper depth and position as required for installation of bond breakers, backer rods, and sealants. Do not leave voids or gaps between the ends of joint filler units.

      a. Smooth Edged Joints: For joints between two concrete slabs or where new concrete abuts smooth-edged materials, use either cork joint filler or closed cell polyurethane joint filler.

b. Irregular Edged Joints: For joints where new concrete abuts granite curbs or other irregular edges, use closed cell polyurethane joint filler.

c. Priming Joint Surfaces:

1. Prime joints which are to receive Type 1A and 1B Sealants.

2. For joints of friable (crumbly, chalky) masonry surfaces and other surfaces which are to receive Type 1 Sealant, prime as recommended by Manufacturer.

3. Prime joints other than those above if so recommended by the manufacturer's printed instructions.

4. Do not allow the primer/sealer to spill or migrate onto adjoining surfaces.

3.3 JOINT BACKING INSTALLATION

A. Install bond breaker tape in relaxed condition as it comes off the roll. Do not stretch the tape. Lap individual lengths.

B. Install backer rod of sufficient size to fill the joint width at all points in a compressed state. Compress backer rod at the widest part of the joint by a minimum of 25 percent. Do not cut or puncture the surface skin of the rod.

3.4 SEALANT INSTALLATION

A. Except as shown or specified otherwise, install sealants in accordance with the manufacturer's printed instructions.

B. Install sealants with ratchet hand gun or other approved mechanical gun. Where gun application is impracticable, install sealant by knife or by pouring, as applicable.

C. Types 2 and 2A Sealants: If low temperature makes application difficult, preheat sealants using manufacturer's recommended heating equipment.

D. Finishing: Tool all vertical, non-sag sealants so as to compress the sealant, eliminating all air voids and providing a neat smoothly finished joint. Provide slightly concave joint surface, unless otherwise indicated or recommended by the manufacturer.

1. Use tool wetting agents as recommended by the sealant manufacturer.

3.5 FIELD QUALITY CONTROL

A. Test Samples

1. If requested by the Authority, for each 1000 linear feet of joint installed, cut out and carefully remove a 6" long sample of the undisturbed sealant and joint backer material from the newly installed Work. Remove the samples in the presence of the Authority's Representative, who will retain them for evaluating and testing.

2. Reseal cutout areas with the same type materials.

3.6 CLEANING

A. Immediately remove misapplied sealant and droppings from metal surfaces with solvents and wiping cloths. On other materials, remove misapplied sealant and droppings by methods and materials recommended in writing by the manufacturer of the sealant material.

B. After sealants are applied and before skin begins to form on sealant, remove all masking and other protection and clean up remaining defacement caused by the Work.

END OF SECTION

SECTION 09705 - RESINOUS FLOORING
ACCELERA HC BROADCAST FLOOR SYSTEM WITH TOPCOAT

PART 1 – GENERAL

1.1 RELATED DOCUMENTS

A. Drawings and general provisions of the Contract, including General and Supplementary Conditions and Division 1 Specification Sections, apply to this Section.

1.2 SUMMARY

A. This section includes the following:

1. Resinous flooring system as shown on the drawings and in schedules.

B. Related sections include the following:

1. Cast-in-Place Concrete
2. Concrete Curing

1.3 SYSTEM DESCRIPTION

A. The work shall consist of preparation of the substrate, the furnishing and application of a cementitious urethane and a squeegee-applied resinous flooring system with decorative chip broadcasts and topcoat. The system shall have the color and texture as specified by the Owner with a nominal thickness of 3/16 inch. It shall be applied to the prepared area(s) as defined in the plans strictly in accordance with the Manufacturer's recommendations.
B. Cove base (if required) to be applied where noted on plans and per manufacturers standard details unless otherwise noted.

1.4 SUBMITTALS

A. Product Data: Latest edition of Manufacturer's literature including performance data and installation procedures.
B. Manufacturer's Safety Data Sheet (SDS) for each product being used.
C. Samples: A 3 x 3 inch square sample of the proposed system. Color, texture, and thickness shall be representative of overall appearance of finished system subject to normal tolerances.

1.5 QUALITY ASSURANCE

A. The Manufacturer shall have a minimum of 10 years' experience in the production, sales, and technical support of epoxy and urethane industrial flooring and related materials.
B. The Applicator shall have experience in installation of the flooring system as confirmed by the manufacturer in all phases of surface preparation and application of the product specified.
C. No requests for substitutions shall be considered that would change the generic type of the specified System.
D. System shall be in compliance with requirements of United States Department of Agriculture (USDA), Food, Drug Administration (FDA), and local Health Department.
E. A pre-installation conference shall be held between Applicator, General Contractor and the Owner to review and clarification of this specification, application procedure, quality control, inspection and acceptance criteria and production schedule.

F. System shall be in compliance with the Indoor Air Quality requirements of California section 01350 as verified by a qualified independent testing laboratory.

1.6 PRODUCT DELIVERY, STORAGE, AND HANDLING

A. Packing and Shipping

1. All components of the system shall be delivered to the site in the Manufacturer's packaging, clearly identified with the product type and batch number.

B. Storage and Protection

1. The Applicator shall be provided with a storage area for all components. The area shall be between 60 F and 90 F, dry, out of direct sunlight and in accordance with the Manufacturer's recommendations and relevant health and safety regulations.
2. Copies of Safety Data Sheets (SDS) for all components shall be kept on site for review by the Engineer or other personnel.

C. Waste Disposal

1. The Applicator shall be provided with adequate disposal facilities for non-hazardous waste generated during installation of the system.

1.7 PROJECT CONDITIONS

A. Site Requirements

1. Application may proceed while air, material and substrate temperatures are between 60 F and 85 F providing the substrate temperature is above the dew point. Outside of this range, the Manufacturer shall be consulted.
2. The relative humidity in the specific location of the application shall be less than 85 % and the surface temperature shall be at least 5 F above the dew point.
3. The Applicator shall ensure that adequate ventilation is available for the work area.
4. The Applicator shall be supplied with adequate lighting equal to the final lighting level during the preparation and installation of the system.

B. Conditions of new concrete to be coated with cementitious urethane material.

1. Concrete shall be moisture cured for a minimum of 3 days and have fully cured a minimum of 5 days in accordance with ACI-308 prior to the application of the coating system pending moisture tests.
2. Concrete shall have a flat rubbed finish, float or light steel trowel finish (a hard steel trowel finish is neither necessary nor desirable).
3. Sealers and curing agents should not to be used.
4. Concrete shall have a minimum design strength of 3.500 psi. and a maximum water/cement ratio of 0.45
5. Concrete surfaces on grade shall have been constructed with a vapor barrier to protect against the effects of vapor transmission and possible delamination of the system.

C. Safety Requirements

1. All open flames and spark-producing equipment shall be removed from the work area prior to commencement of application.
2. "No Smoking" signs shall be posted at the entrances to the work area.
3. The Owner shall be responsible for the removal of foodstuffs from the work area.
4. Non-related personnel in the work area shall be kept to a minimum.

1.8 WARRANTY

A. Dur-A-Flex, Inc. warrants that material shipped to buyers at the time of shipment substantially free from material defects and will perform substantially to Dur-A-Flex, Inc. published literature if used in accordance with the latest prescribed procedures and prior to the expiration date.
B. Dur-A-Flex, Inc. liability with respect to this warranty is strictly limited to the value of the material purchase.

PART 2 – PRODUCTS

2.1 FLOORING

A. Dur-A-Flex, Inc, ACCELERA HC self-leveling, decorative chip broadcast, cementitious urethane/blended polymer seamless flooring system

1. System Materials:
   a. Topping: Dur-A-Flex, Inc, Poly-Crete MD/SL resin, hardener and SL aggregate.
   b. The broadcast aggregate shall be Dur-A-Flex, Inc. Micro or Macro chips.
   c. 2nd Broadcast Coat: Dur-A-Flex, Inc, ACCELERA resin and hardener.
   d. Topcoat: Dur-A-Flex, Inc. ACCELERA resin and hardener.

   Patch Materials
   a. Shallow Fill and Patching: Use Dur-A-Flex, Inc. Poly-Crete MD (up to ¼ inch).
   b. Deep Fill and Sloping Material (over ¼ inch): Use Dur-A-Flex, Inc. Poly-Crete WR.

2.2 MANUFACTURER

A. Dur-A-Flex, Inc., 95 Goodwin Street, East Hartford, CT 06108, Phone: (860) 528-9838, Fax: (860) 528-2802
B. Manufacturer of Approved System shall be single source.

2.3 PRODUCT REQUIREMENTS

A. Topping	Poly-Crete SL
1. Percent Reactive	100 %
2. VOC	0 g/L
3. Bond Strength to Concrete ASTM D 4541	400 psi, substrates fails
4. Compressive Strength, ASTM C579	9,000 psi
5. Tensile Strength, ASTM D 638	2,175 psi
6. Flexural Strength, ASTM D 790	5,076 psi
7. Impact Resistance @ 125 mils, MIL D-3134,	160 inch lbs
B. Broadcast and Topcoat	ACCELERA

1.	Percent Solids	100 %
2.	VOC	0 g/L
3.	Bond Strength to Concrete ASTM D 4541	400 psi, substrates fails
4.	Hardness, Shore D ASTM D2240	70
5.	Compressive Strength, ASTM C579	18,000 psi
6.	Tensile Strength, ASTM D638	2,600 psi
7.	Abrasion Resistance, ASTM D4060 C-17 Wheel, 1,000 gm load, 1,000 cycles	27 mg loss
8.	Pot life @ 70 F	7 – 10 minutes
9.	Gloss (ASTM D523) 60°	90
10.	Coefficient of Friction (ASTM D2047)	0.6

PART 3 – EXECUTION

3.1 EXAMINATION

A. Examine substrates, areas and conditions, with Applicator present, for compliance with requirements for maximum moisture content, installation tolerances and other conditions affecting flooring performance.

1. Verify that substrates and conditions are satisfactory for flooring installation and comply with requirements specified.

3.2 PREPARATION

A. General

1. New and existing concrete surfaces shall be free of oil, grease, curing compounds, loose particles, moss, algae growth, laitance, friable matter, dirt, and bituminous products.
   2. Moisture Testing: Perform tests recommended by manufacturer and as follows.
      a. Perform anhydrous calcium chloride test ASTM F 1869-98. Application will proceed only when the vapor/moisture emission rates from the slab is less than and not higher than 20 lbs/1,000 sf/24 hrs.
      b. Perform relative humidity test using is situ probes, ASTM F 2170. Proceed with installation only after substrates have a maximum 99% relative humidity level measurement.
      c. If the vapor drive exceeds 99% relative humidity or 20 lbs/1,000 sf/24 hrs then the Owner and/or Engineer shall be notified and advised of additional cost for the possible installation of a vapor mitigation system that has been approved by the manufacturer or other means to lower the value to the acceptable limit.
   3. There shall be no visible moisture present on the surface at the time of application of the system. Compressed oil-free air and/or a <u>light</u> passing of a propane torch may be used to dry the substrate.
   4. Mechanical surface preparation
      a. Shot blast all surfaces to receive flooring system with a mobile steel shot, dust recycling machine (Blastrac or equal). All surface and embedded accumulations of paint, toppings hardened concrete layers, laitance, power trowel finishes and other similar surface characteristics shall be completely removed leaving a bare concrete surface having a minimum profile of CSP 4-5 as described by the International Concrete Repair Institute.

b. Floor areas inaccessible to the mobile blast machines shall be mechanically abraded to the same degree of cleanliness, soundness and profile using diamond grinders, needle guns, bush hammers, or other suitable equipment.
c. Where the perimeter of the substrate to be coated is not adjacent to a wall or curb, a minimum 1/4 inch
key cut shall be made to properly seat the system, providing a smooth transition between areas. The detail cut shall also apply to drain perimeters and expansion joint edges.
d. Cracks and joints (non-moving) greater than 1/8 inch wide are to be chiseled or chipped-out and repaired per manufacturer's recommendations.

5. At spalled or worn areas, mechanically remove loose or delaminated concrete to a sound concrete and patch per manufactures recommendations.

3.3 APPLICATION

A. General

1. The system shall be applied in six distinct steps as listed below:
   a. Substrate preparation
   b. Topping/overlay application with decorative chip broadcast.
   c. Resin application with decorative chip broadcast
   d. Topcoat application
2. Immediately prior to the application of any component of the system, the surface shall be dry and any remaining dust or loose particles shall be removed using a vacuum or clean, dry, oil-free compressed air.
3. The handling, mixing and addition of components shall be performed in a safe manner to achieve the desired results in accordance with the Manufacturer's recommendations.
4. The system shall follow the contour of the substrate unless pitching or other leveling work has been specified by the Architect.
5. A neat finish with well-defined boundaries and straight edges shall be provided by the Applicator.

B. Topping

1. The topping shall be applied as a self-leveling system as specified by the Architect. The topping shall be applied in one lift with a nominal thickness of 1/8 inch.
2. The topping shall be comprised of three components, a resin, hardener and filler as supplied by the Manufacturer.
3. The hardener shall be added to the resin and thoroughly dispersed by suitably approved mechanical means. SL Aggregate shall then be added to the catalyzed mixture and mixed in a manner to achieve a homogenous blend.
4. The topping shall be applied over horizontal surfaces using ½ inch "v" notched squeegee, trowels or other systems approved by the Manufacturer.
5. Immediately upon placing, the topping shall be degassed with a loop roller.
6. Chip aggregate shall be broadcast to excess into the wet resin, Macro chip at the rate of 0.1 lbs/sf and Micro chip at the rate of 0.15 lbs/sf.
7. Allow material to fully cure. Vacuum, sweep and/or blow to remove all loose aggregate.

D. Second Broadcast Coat

1. The second broadcast coat shall be comprised of two components: a resin and a hardener as supplied by the Manufacturer and mixed per manufacturer instructions.

2. The hardener shall be added to the resin and thoroughly mixed by suitably approved mechanical means.
3. The second broadcast coat shall be applied over horizontal surfaces using a squeegee and cross rolled with a 3/8 inch nap roller at the rate of 65 SF/kit.
4. Chip aggregate shall be broadcast to excess into the wet resin, Macro chip at the rate of 0.1 lbs/sf and Micro chip at the rate of 0.15 lbs/sf.
5. Allow material to fully cure. Vacuum, sweep and/or blow to remove all loose aggregate.

E. Topcoat

1. The grout coat shall be comprised of ACCELERA resin and hardener mixed per the manufacturer's instructions.
2. The grout coat shall be applied using a squeegee and cross rolled with a 3/8 inch nap roller at the rate of 65 SF/kit.
3. The finished floor will have a nominal thickness of 3/16 inch.

*If an orange-peel texture is desired, apply a second top coat using a squeegee and cross roll with a 3/8 inch nap roller at the rate of 200 SF/kit.

3.4 FIELD QUALITY CONTROL

A. Tests, Inspection

1. The following tests shall be conducted by the Applicator:
   a. Temperature
      1. Air, substrate temperatures and, if applicable, dew point.
   b. Coverage Rates
      1. Rates for all layers shall be monitored by checking quantity of material used against the area covered.

3.5 CLEANING AND PROTECTION

A. Cure flooring material in compliance with manufacturer's directions, taking care to prevent their contamination during stages of application and prior to completion of the curing process.

B. Remove masking. Perform detail cleaning at floor termination, to leave cleanable surface for subsequent work of other sections.

END OF SECTION

DUR-A-FLEX
INNOVATION FROM THE FLOOR UP

ACCELERA HC SYSTEM

SUBMITTAL PACKAGE CONTENTS:

- ACCELERA HC – PRODUCT DATA SHEET
- ACCELERA HC – APPLICATION INSTRUCTIONS
- ACCELERA HC SYSTEM – SDS
- POLY-CRETE SL- SDS
- CHIP –SDS
- MACRO CHIP COLOR CHART
- MICRO CHIP COLOR CHART
- SURFACE PREPARATION GUIDELINES
- FLOOR EVALUATION GUDELINES
- CHEMICAL RESISTANCE CHART
- CLEANING GUIDELINES
- JOINT GUIDELINES
- STANDARD WARRANTY
- ACCELERA BROCHURE

DUR-A-FLEX
INNOVATION FROM THE FLOOR UP

PRODUCT DATA SHEET

95 Goodwin Street
East Hartford, CT 06108

Tel: 800-253-3539 • Fax: 860-528-2802 • www.dur-a-flex.com • contact_us@dur-a-flex.com

ACCELERA HC

DESCRIPTION

ACCELERA HC is part of the ACCELERA family of fast-track, seamless floor systems. ACCELERA HC is a 100% solids hybrid floor system consisting of a POLY-CRETE SL self-leveling cementitious urethane base coat with a decorative vinyl chip broadcast, an ACCELERA second broadcast of decorative vinyl chips, and two clear ACCELERA topcoats. ACCELERA HC is UV stable and offers excellent stain resistance.

BENEFITS

- Fast application and cure time reduces installation time and disruption to operations
- High moisture tolerance – can be installed on 7 day old concrete
- Color stable
- Low odor
- 0 VOC
- Excellent chemical and stain Resistance
- Excellent wear characteristics

LIMITATIONS

This product is best suited for application in temperatures between 60°F and 85°F and jobsite relative humidity is 30% or higher. Use ACCELERA LH resin for applications where jobsite relative humidity level is between 10% and 30% to ensure consistent working and cure times. Please refer to the ACCELERA HC Application Instructions for a complete list of limitations.

CHEMICAL RESISTANCE

This product is resistant to many common chemicals. Please refer to the master Chemical Resistance Chart on our website for actual resistance to specific chemicals/reagents.

TYPICAL USES

- Restaurants
- Grocery
- Healthcare
- Pharmaceutical Mfg
- Retail

COLORS

ACCELERA HC floor system is available in MACRO or MICRO decorative chips. The MACRO and MICRO chips are available in standard and custom multi-color pre-blends. Please refer to the MACRO and MICRO Chip Color Selector Chart.

PACKAGING & STORAGE CONDITIONS

POLY-CRETE SL is available in pre-measured kits that consist of resin, hardener and aggregate. ACCELERA is available in pre-measured kits. Each kit consists of resin, hardener and, where applicable, a pre-measured color pack. Kit coverage depends on the application - see spread rates below. A smaller, approximate 25 square foot kit is available for smaller areas and for top-coating cove. Shelf life is 12 months from ship date in the original unopened container. Vinyl chips are available in 10 lb. and 55 lb. boxes.

APPLICATION METHOD/SPREAD RATE

POLY-CRETE SL is applied to a properly prepared area at the required thickness using a "V" notched squeegee. The freshly placed material is then loop rolled into which the proper size colored chip blend is broadcast to excess to achieve the desired aesthetics. Allow a minimum of 6 hours for the Base Coat to cure before sweeping, sanding or vacuuming. A second chip broadcast is delivered into ACCELERA. ACCELERA is applied with a notched or 12" flat window squeegee followed by a cross roll using a 3/8" nap roller in accordance with the approximate spread rates as follows:

Base Coat w/Broadcast:	55 SF/Kit
2nd Broadcast Coat:	65 SF/Kit
Grout Coat:	65 SF/Kit
Topcoat:	200 SF/Kit

NOTE: Above rates calculated using the standard Large kit. (Spread rates are the same for both ACCELERA and ACCELERA LH.)

"Warranties: Seller warrants that its goods, as described on the face hereof, are free from any defects in material or workmanship. **SELLER MAKES NO OTHER WARRANTY, EXPRESS OR IMPLIED, AND ALL IMPLIED WARRANTIES OF MERCHANTABILITY AND FITNESS FOR A PARTICULAR PURPOSE ARE HEREBY DISCLAIMED. SELLER SHALL NOT BE LIABLE FOR PROSPECTIVE PROFITS OR SPECIAL INDIRECT OR CONSEQUENTIAL DAMAGES.** Seller's sole liability and buyer's exclusive remedy for breach of any warranty as expressly limited, at seller's option, to replacement at the original F.O.B. point or refund of purchase price, but in no event will Seller's liability exceed the total purchase price of the defective product. Seller shall not be responsible for any claim resulting from failure to utilize product in the manner in which it was intended and in accordance with instruction provided for use of product. Any claim for breach of warranty shall be deemed waived unless buyer shall give seller written notice of such claim within sixty (60) days after delivery and shall allow seller reasonable opportunity to investigate claim and inspect product."

ACCELERA HC

PRODUCT PROPERTIES

Weight Solids, % (Resin/Hardener/Powder)	100%
Volatile Organic Compounds Content (VOC)	0 g/L
Compressive Strength (ASTM C579)	18,000 psi
Tensile Strength (ASTM D638)	2,600 psi
Service Temperature	Up to 200 degrees F
Taber Abrasion Resistance (ASTM D4060) ASTM D 4060, 1000g load, 1000 cycles, CS-17 wheel	27 mg
Coefficient of Friction (ASTM D2047)	0.6
Shore D Hardness (ASTM D2240)	70
Gloss (ASTM D523) 60°	90
Pot Life at 70°F, 50%RH Working Time at 70°F ,50%RH Re-coat Window at 70°F, 50%RH	7-10 minutes 10 minutes 16 hours
Foot Traffic (per coat): 80°F, 50%RH (20%RH w/LH resin) 70°F, 50%RH (20%RH w/LH resin) 60°F, 50%RH (20%RH w/LH resin)	1.5 – 2 hours 2 – 2.5 hours 2.5 – 3 hours
Full Service	24 hours
Full Chemical Resistance	7 days

DRAWINGS AND DETAILS

Standard CAD drawings and details are available for coves, drains, breaches, transitions, etc. Please refer to the master Drawings and Details guide for actual drawings.

JOINT GUIDELINES

Refer to the Joint Guidelines on our website for complete details.

MOISTURE CONCERNS

Normal limits for moisture vapor transmission for ACCELERA HC floor systems are 20 lbs./1,000 sq. ft./24 hour using the calcium chloride test per ASTM F-1869 or 99% relative humidity using in-situ Relative Humidity Testing per ASTM F-2170. Please refer to the Floor Evaluation Guidelines at www.dur-a-flex.com for complete details.

CLEANING

This product is considered a low maintenance flooring solution, however, certain textures and service environments do require certain procedures. Please refer to the master Cleaning Guide on our website.

CAUTION

Follow the Hazardous Materials Identification System labeling guide for proper personal protective equipment to use when handling this product. Use only as directed. KEEP OUT OF REACH OF CHILDREN.

Before using any DUR-A-FLEX, Inc. product, be sure the Material Safety Data Sheet is read and understood.

DUR-A-FLEX
INNOVATION FROM THE FLOOR UP

APPLICATION INSTRUCTIONS

95 Goodwin Street
East Hartford, CT 06108

Tel: 800-253-3539 • Fax: 860-528-2802 • www.dur-a-flex.com • contact_us@dur-a-flex.com

ACCELERA HC

IMPORTANT! Read these instructions carefully several days prior to starting your work. Seek answers to any questions you may have before you begin. DUR-A-FLEX, Inc. maintains a Technical Staff that will be glad to answer your questions and give you advice pertaining to your particular installation.

SYSTEM OVERVIEW

ACCELERA HC is a 100%-solids, low-odor, decorative chip hybrid floor system consisting of a self-leveling cementitious urethane base coat with decorative chip broadcast, and a clear body coat with a decorative chip broadcast, and two clear topcoats utilizing ACCELERA resin and hardener. Total nominal system thickness is 3/16 inch.

SURFACE PREPARATION

Surface should be profiled, clean, dry, oil free and sound. Shot Blasting is the preferred preparation method. Please refer to the master Surface Preparation Guide for more information. Never feather edge ACCELERA HC, always terminate in a keyway groove at doorways, drains and exposed edges.

MOISTURE CONCERNS

Please refer to the Floor Evaluation Guidelines in the Contractor's Center of our website for a step-by-step process to determine the condition of the concrete.

MIXING AREA

Select a convenient mix area and protect the surface from spillage by covering with a sheet of plastic and a layer of cardboard. Be generous with the amount of space allocated for this function. The more comfortably your mixer works, the less likely you are to have a "mix error". Please refer to our Mix Station video on our website for more information.

STORAGE CONDITIONS

POLY-CRETE MD SL must be stored dry. Exposure of the aggregate to moisture for an extended period will cause lumps. Do not allow resins to freeze. The shelf life is 6 months from the ship date in the original unopened container.

ACCELERA resin and hardener must be stored dry. Do not allow resins to freeze. The shelf life is 12 months from the date of manufacture in the original unopened container. Products must be stored in temperatures no less than 60°F and no greater than 85°F.

JOINT GUIDELINES

Refer to the Joint Guidelines for complete details on our website.

APPLICATION METHOD

Proper planning is essential for satisfactory appearance of the finished floor. Lay out installation in sections to allow full width to be finished in 5 minutes or less (@70°F / 50% RH).

MANPOWER REQUIREMENTS

Because of the fast curing of ACCELERA products assign one person to each job – do not multi-task:

1 person mixing (see notes below)
1 person running pails
1 person squeegee
1 person loop cross-rolling
1 person broadcasting for every 15 linear feet of wet edge

NOTES:
- Additional manpower will be required for complex installations requiring cut-in work.
- Above manpower applies to maximum 40 foot wet edge
- Poly-Crete SL requires 2 persons mixing

BASE COAT ACCELERA HC uses POLY-CRETE SL for a base coat. POLY-CRETE SL is supplied in pre-measured units consisting of one pail of resin, one container of hardener and one bag of aggregate (powder). Pour the POLY-CRETE MD /SL resin into a metal 5-gallon pail; scrape bottom and sides with a mix stick to assure that all material is transferred to the mix bucket. Use the Poly-Crete pail to scrape the mix stick, and never scrape the mix stick on the side of the mix pail. Pour the entire POLY-CRETE MD/SL hardener into the center of the mix bucket. (If using POLY-CRETE NATURAL SL with pigment add the pigment to the resin and hardener.) Next, using a ½" 850 RPM drill with a 4" dispersion blade, mix the resin and hardener for 30 seconds. Slowly add the POLY-CRETE SL aggregate to the resin and hardener and mix at 850 RPM for 1 minute. **PRODUCT MUST BE MIXED WITH A 4" DISPERSION BLADE AND A ½" VARIABLE SPEED 850 RPM DRILL. *DO NOT ADD HARDENER TO RESIN UNTIL BATCH IS READY FOR MIXING*. *FAILURE TO ADD ALL POLY-CRETE SL AGGREGATE WILL RESULT IN IMPROPER CURE OF MATERIAL***

Pour the entire batch onto the floor and spread with a ½ V notched squeegee. Each kit of POLY-CRETE MD/SL will yield 55 Sq. Ft. per kit. Check squeegee every 1000 sq feet for wear. Have new squeegee ready to avoid interruption in the process.

Use a flat trowel to cut in edges, drains and around equipment. For continuity of finish and to ensure that new batches of material are blended together without transition lines, use even pressure and trowel at a low angle using a sweeping motion.

"Warranties Seller warrants that its goods, as described on the face hereof, are free from any defects in material or workmanship. **SELLER MAKES NO OTHER WARRANTY, EXPRESS OR IMPLIED, AND ALL IMPLIED WARRANTIES OF MERCHANTABILITY AND FITNESS FOR A PARTICULAR PURPOSE ARE HEREBY DISCLAIMED. SELLER SHALL NOT BE LIABLE FOR PROSPECTIVE PROFITS OR SPECIAL INDIRECT OR CONSEQUENTIAL DAMAGES.** Seller's sole liability and buyer's exclusive remedy for breach of any warranty as expressly limited, at seller's option, to replacement at the original F O B. point or refund of purchase price, but in no event will Seller's liability exceed the total purchase price of the defective product Seller shall not be responsible for any claim resulting from failure to utilize product in the manner in which it was intended and in accordance with instruction provided for use of product Any claim for breach of warranty shall be deemed waived unless buyer shall give seller written notice of such claim within sixty (60) days after delivery and shall allow seller reasonable opportunity to investigate claim and inspect product"

To remove squeegee lines and help the material level, immediately Loop Roll the material after it has been placed. The material should be rolled straight forward and back picking up the roller with each pass; this will avoid leaving divots in floor. After the squeegee lines have been removed the floor should be cross rolled side to side along the entire wet edge. The final cross roll should be completed within 12 minutes of mixing the product at 70°F. Wait 15 minutes (@70F) for air release prior to broadcasting.

Wear spiked shoes and broadcast chips up into the air and let it fall onto the floor. Make sure the broadcast is dispersed evenly over the entire floor area at a rate of 0.1lbs per square foot using macro chip and 0.15 lbs per square foot using micro chip. Broadcasting needs to be completed within 30 minutes of mixing. Do not roll or walk back into areas that have been broadcast. Allow POLY-CRETE MD/SL to cure for a minimum of 6 hours at 70°F.

Use a stiff bristle broom to sweep off excess chips. Use a vacuum to remove chips around the edges and corners that are not accessible with a broom.

Scrape the floor with a trowel or floor scraper. Sweep and vacuum the floor again.

SECOND BROADCAST

NOTE: Normal recoat window for ACCELERA is 16 hours. If recoating between 16 and 24 hours ACCELERA can be sanded and recoated. Beyond 24 hours an application of DUR-A-FLEX TIE COAT II is required before applying the next coat.

NOTE: Application of ACCELERA where jobsite relative humidity is less than 30% is NOT recommended. Use ACCELERA LH resin for applications where jobsite relative humidity is between 10% and 30%. Spread rates are the same for both ACCELERA and ACCELERA LH.

NOTE: Cooler temperatures will increase cure time – plan accordingly.

MIX AND APPLY ONE BATCH AT A TIME - DO NOT MIX HARDENER AND RESIN UNTIL BATCH IS READY FOR IMMEDIATE APPLICATION.

Pour the ACCELERA hardener into the ACCELERA resin container; scraping the bottom and sides with a mix stick to assure that all material is transferred to the resin bucket. Use the hardener pail to scrape the mix stick and never scrape mix stick on the side of the mix pail. Using a ½" 750 RPM drill with a 3 inch jiffler blade, mix the resin and hardener for 30 seconds.

Pour the entire batch onto the floor in a 4 to 6" ribbon. Using a flat squeegee spread the material evenly at approximately 65 square feet per kit. Cross roll the material pushing a 3/8 inch nap roller in the same direction immediately after the squeegee to ensure there are no puddles. All rolling should be completed within 5 minutes.

Wear spiked shoes while broadcasting chips up into the air and letting them fall onto the floor. Make sure the broadcast is dispersed evenly over the entire floor area at a rate of 0.1lbs per square foot for macro chips and .15 lbs per square foot for micro chip. Broadcasting needs to be completed within 10 minutes of mixing. Do not roll or walk back into areas that have been broadcast. Allow to cure for 2 hours (@ 70°F / 50% RH).

Use a vacuum to remove excess loose chips. Scrape the floor with a trowel or floor scraper. Vacuum the floor again.

GROUT COAT Pour the ACCELERA hardener into the ACCELERA resin container; scraping the bottom and sides with a mix stick to assure that all material is transferred to the resin bucket. Use the hardener pail to scrape the mix stick and never scrape mix stick on the side of the mix pail. Using a ½" 750 RPM drill with a 3 inch jiffler blade, mix the resin and hardener for 30 seconds.

Pour the entire batch onto the floor in a 4 to 6" ribbon. Using a flat squeegee spread the material evenly at approximately 65 square feet per kit. Cross roll the material pushing a 3/8 inch nap roller in the same direction immediately after the squeegee to ensure there are no puddles. All rolling should be completed within 5 minutes. Allow to cure for 2 hours (@ 70°F / 50% RH).

TOPCOAT Pour the ACCELERA hardener into the ACCELERA resin container; scraping the bottom and sides with a mix stick to assure that all material is transferred to the resin bucket. Use the hardener pail to scrape the mix stick and never scrape mix stick on the side of the mix pail. Using a ½" 750 RPM drill with a 3 inch jiffler blade, mix the resin and hardener for 30 seconds.

Pour the entire batch onto the floor in a 4 to 6" ribbon. Using a flat squeegee, spread the material evenly at approximately 200 square feet per kit. Cross roll the material pushing a 3/8 inch nap roller in the same direction immediately after the squeegee to ensure there are no puddles. All rolling should be completed within 5 minutes. Allow to cure for 2 hours (@ 70°F / 50% RH).

CAUTION

Refer to Material Safety Data Sheet for proper personal protective equipment to use when handling this product. Use only as directed. KEEP OUT OF REACH OF CHILDREN. Do not reseal moisture-contaminated hardener. This will result in carbon dioxide generation or possible violent rupture of container.

Accelera Resin
SAFETY DATA SHEET

1. IDENTIFICATION

Product Identifier: Accelera Resin, Accelera LH Resin
Product Code:

Recommended use: Floor Surfacing

Manufacturer Name: Dur-A-Flex, Inc.
95 Goodwin Street
East Hartford, CT 06108
Telephone number: 860-528-9838

Emergency phone number: 1-800- 424-9300 (CHEMTREC)

Date of Preparation: January 6, 2014

2. HAZARD(S) IDENTIFICATION

This product is one part of a 3 part product. Read and understand the hazard information on the SDS for Accelera Hardener before using this product.

Classification:

Physical	Health
Not Hazardous	Skin Irritation Category 2 Eye Irritation Category 2 Skin Sensitization Category 1 Specific Target Organ Toxicity – Single Exposure Category 3 (Respiratory Irritation)

Labeling:

Warning!

Hazard statement(s)

Causes skin irritation.
Causes serious eye irritation.
May cause an allergic skin reaction.
May cause respiratory irritation.

Precautionary statement(s)

Avoid breathing vapors or spray.
Use only outdoors or in a well-ventilated area.
Wash thoroughly after handling.
Contaminated work clothing should not be allowed out of the workplace.
Wear protective gloves, eye protection and face protection.
IF ON SKIN: Wash with plenty of soap and water.

If skin irritation or rash occurs: Get medical attention.
Take off contaminated clothing and wash it before reuse.
IF IN EYES: Rinse cautiously with water for several minutes. Remove contact lenses, if present and easy to do. Continue rinsing.
If eye irritation persists: Get medical attention.
IF INHALED: Remove person to fresh air and keep comfortable for breathing.
Call a POISON CENTER if you feel unwell.
Store in a well-ventilated place. Keep container tightly closed. Store locked up.
Dispose of contents and container in accordance with local and national regulations.

3. COMPOSITION / INFORMATION ON INGREDIENTS

Chemical name	CAS No.	Concentration
Secondary diamines	Proprietary	50-100%

The specific identity and/or exact percentage (concentration) of composition has been withheld as a trade secret.

4. FIRST-AID MEASURES

Inhalation: Remove to fresh air. If breathing is difficult have qualified personnel administer oxygen. If breathing has stopped, administer artificial respiration. Get medical attention.
Skin contact: Remove contaminated clothing. Immediately wash skin thoroughly with soap and water for 20 minutes. If rash or irritation develops, get medical attention. Launder clothing before re-use.
Eye contact: Immediately flush with large quantities of water for 15 minutes, holding the eyelids apart. Get medical attention if irritation persists.
Ingestion: If conscious, rinse mouth with water. Do not induce vomiting. Never give anything by mouth to an unconscious or convulsing person. Get medical attention.

Notes to Physicians: Application of a corticosteroid cream has been effective in treating skin irritation.

Most important symptoms/effects, acute and delayed: May be irritating to eyes, skin and respiratory tract. May cause allergic skin reaction.

Indication of immediate medical attention and special treatment, if necessary: If a skin reaction occurs, get medical attention. Symptoms may be delayed for several hours after exposure.

5. FIRE-FIGHTING MEASURES

Suitable (and unsuitable) extinguishing media: Use alcohol foam, carbon dioxide and dry chemical. Cool fire exposed containers with water.

Specific hazards arising from the chemical: Ammonia gas may be liberated at high temperatures. Combustion may produce carbon and nitrogen oxides.

Special protective equipment and precautions for fire-fighters: Firefighters should wear positive pressure self-contained breathing apparatus and full protective clothing.

6. ACCIDENTAL RELEASE MEASURES

Personal precautions, protective equipment, and emergency procedures: Wear appropriate protective clothing as described in Section 8. Isolate the area and prevent access. Ventilate and remove ignition sources.

Environmental precautions: Avoid release to the environment. Report releases as required by local, state and federal authorities.

Methods and materials for containment and cleaning up: Contain and collect with an inert absorbent. Place into an appropriate container for disposal,

7. HANDLING AND STORAGE

Precautions for safe handling: Avoid contact with eyes, skin and clothing. Avoid breathing vapors or mists. Wash thoroughly after handling and before eating, drinking, smoking or using the toilet. Use with adequate ventilation.

Conditions for safe storage, including any incompatibilities: Keep containers tightly closed in a dry, cool and well-ventilated place. Protect from physical damage. Store away from oxidizing agents.

8. EXPOSURE CONTROLS / PERSONAL PROTECTION

Exposure guidelines:

Secondary diamines	None Established

Appropriate engineering controls: Use with adequate general or local exhaust ventilation to minimize exposures.

Individual protection measures, such as personal protective equipment:
Respiratory protection: If the exposures are excessive, a NIOSH approved respirator with an organic vapor cartridge and a dust/mist prefilter or supplied air respirator is recommended. Selection and use of respiratory equipment must be in accordance with OSHA 1910.134 and good industrial hygiene practice.
Skin protection: Wear impervious gloves such as nitrile rubber or polyvinyl alcohol.
Eye protection: Chemical safety goggles recommended.
Other: Impervious clothing as needed to prevent contact. An eye wash should be available in the immediate work area.

9. PHYSICAL AND CHEMICAL PROPERTIES

Appearance (physical state, color, etc.): Light yellow liquid
Odor: Slight odor

Odor threshold: Not available	**pH:** Not available
Melting Point/Freezing Point: - Not available	**Boiling Point:** Not available
Flash point: >200 °F / >93.4°C	**Evaporation rate:** Not available

Flammability (solid, gas): Not flammable	
Flammable limits: LEL: Not available	**UEL:** Not available
Vapor pressure: Not available	**Vapor density:** Not applicable
Relative density: 1.0535	**Solubility(is):** Not available
Partition coefficient: n-Octanol/water: Not applicable	**Auto-ignition temperature:** Not available
Decomposition temperature: Not available	**Viscosity:** Not available

10. STABILITY AND REACTIVITY

Reactivity: None known.
Chemical stability: Stable
Possibility of hazardous reactions: Ammonia gas may be liberated at high temperatures. N-Nitrosamines may be formed when the product comes in contact with nitrous acid, nitrites or atmospheres with high nitrous oxide concentrations.
Conditions to avoid: Avoid excessive heat.
Incompatible materials: Avoid contact with oxidizing agents.
Hazardous decomposition products: Thermal decomposition may produce carbon and nitrogen oxides, ammonia, nitrosamines and nitric acid.

11. TOXICOLOGICAL INFORMATION

Inhalation: Inhalation of vapors or mists may cause mucous membrane and upper respiratory tract irritation.
Ingestion: Swallowing may cause gastrointestinal irritation, nausea, vomiting and diarrhea.
Skin contact: Skin contact may cause irritation. May cause allergic skin reaction.
Eye contact: May cause irritation with redness, tearing, stinging and swelling.

Chronic effects from short- and long-term exposure: No chronic effects are expected.

Reproductive Toxicity: This product is not expected to cause adverse reproductive or developmental effects.

Sensitization: Secondary diamines may cause skin sensitization.

Mutagenicity: This product is not expected to cause mutagenic activity.

Carcinogenicity: None of the components are listed as a carcinogen by IARC, NTP, ACGIH or OSHA.

Acute Toxicity Values:
Secondary diamines: No toxicity data available.

12. ECOLOGICAL INFORMATION

Ecotoxicity:
Secondary diamines: No data available

Persistence and degradability: No data available.
Bioaccumulative potential: No data available.
Mobility in soil: No data available.
Other adverse effects: None known.

13. DISPOSAL CONSIDERATIONS

Dispose in accordance with all local, state and federal regulations.

14. TRANSPORT INFORMATION

	UN Number	Proper shipping name	Hazard Class	Packing Group	Environmental Hazard
DOT	None	Not Regulated	None	None	None
TDG	None	Not Regulated	None	None	None
IMDG	None	Not Regulated	None	None	None
IATA	None	Not Regulated	None	None	None

Transport in bulk (according to Annex II of MARPOL 73/78 and the IBC Code): Not applicable – product is transported only in packaged form.

Special precautions:

15. REGULATORY INFORMATION

CERCLA: This product is not subject to CERCLA reporting requirements as it is sold. Many states have more stringent release reporting requirements. Report spills required under federal, state and local regulations.

SARA Hazard Category (311/312): Acute Health

SARA 313 Information: This product contains the following chemicals subject to Annual Release Reporting Requirements Under SARA Title III, Section 313 (40 CFR 372): None

California Proposition 65
This product contains the following chemicals known to the State of California to cause cancer or reproductive toxicity (birth defects): None

EPA TSCA Inventory: All of the ingredients in this product are listed on the EPA TSCA Inventory.

CANADA:
Canadian WHMIS Classification: Class D Division 2 Subdivision B (Toxic Material Causing other Toxic Effects)
This product has been classified under the CPR and this MSDS discloses information elements required by the CPR.

16. OTHER INFORMATION

NFPA Rating: Health = 2 Flammability = 1 Instability = 0
HMIS Rating: Health = 2 Flammability = 1 Physical Hazard = 0

SDS Revision History: New SDS
Date of preparation: January 6, 2014
Date of last revision: New SDS

The above information is accurate to the best of our knowledge. However, since data, safety standards, and government regulations are subject to change and the conditions of handling and use, or misuse, are beyond our control, Dur-A-Flex, Inc. MAKES NO WARRANTY, EITHER EXPRESS OR IMPLIED, WITH RESPECT TO THE COMPLETENESS OR CONTINUING ACCURACY OF THE INFORMATION CONTAINED HEREIN AND USE.

Accelera Hardener
SAFETY DATA SHEET

1. IDENTIFICATION

Product Identifier: Accelera Hardener
Product Code:

Recommended use: Floor Surfacing

Manufacturer Name: Dur-A-Flex, Inc.
95 Goodwin Street
East Hartford, CT 06108
Telephone number: 860-528-9838

Emergency phone number: 1-800- 424-9300 (CHEMTREC)

Date of Preparation: January 6, 2014

2. HAZARD(S) IDENTIFICATION

This product is one part of a 3 part product. Read and understand the hazard information on the SDS for Accelera Resin before using this product.

Classification:

Physical	Health
Not Hazardous	Acute Toxicity Category 4 - Inhalation Skin Sensitization Category 1 Respiratory Sensitization Category 1 Specific Target Organ Toxicity – Single Exposure Category 3 (Respiratory Irritation)

Labeling:

Danger!

Hazard statement(s)

Harmful by inhalation.
May cause an allergic skin reaction.
May cause allergy or asthma symptoms or breathing difficulties if inhaled.
May cause respiratory irritation.

Precautionary statement(s)

Avoid breathing mist, vapors and spray.
Use only outdoors or in a well-ventilated area.
Contaminated work clothing should not be allowed out of the workplace.
In case of inadequate ventilation wear respiratory protection
Wear protective gloves.

IF INHALED: Remove person to fresh air and keep comfortable for breathing.
If experiencing respiratory symptoms: Call a POISON CENTER.
IF ON SKIN: Wash with plenty of soap and water.
If skin irritation or rash occurs: Get medical attention.
Take off contaminated clothing and wash it before reuse.
Store in a well-ventilated place. Keep container tightly closed.
Store locked up.
Dispose of contents and container in accordance with local and national regulations.

3. COMPOSITION / INFORMATION ON INGREDIENTS

Chemical name	CAS No.	Concentration
Homopolymer of Hexamethylene Diisocyanate	28182-81-2	95-100%
Hexamethylene-1,6-Diisocyanate	822-06-0	<0.15%

The specific identity and/or exact percentage (concentration) of composition has been withheld as a trade secret.

4. FIRST-AID MEASURES

Inhalation: Immediately remove to fresh air. If breathing is difficult have qualified personnel administer oxygen. If breathing has stopped, administer artificial respiration. Get immediate medical attention. Asthma-like symptoms may develop immediately or delayed up to several hours.
Skin contact: Immediately remove contaminated clothing. Wash skin thoroughly with soap and water. If rash or irritation develops, get medical attention. Launder clothing before re-use.
Eye contact: Immediately flush with large quantities of water for 15 minutes, holding the eyelids apart. Get medical attention if irritation develops.
Ingestion: If conscious, rinse mouth with water. Never give anything by mouth to an unconscious or convulsing person. DO NOT INDUCE VOMITING. Get medical attention.

Most important symptoms/effects, acute and delayed: May be irritating to eyes, skin and respiratory system. May cause allergic skin and respiratory reaction. If an allergic respiratory reaction occurs, get immediate medical attention. Symptoms may be delayed. Individuals sensitized to isocyanates may have a life-threatening allergic reaction.

Indication of immediate medical attention and special treatment, if necessary: If skin or respiratory sensitization occurs, get immediate medical attention. Symptoms may be delayed for several hours after exposure. Respiratory sensitization may be life threatening.

Notes to Physicians: If cornea is burned, instill antibiotic/steroid preparation as needed. Workplace vapors could produce reversible corneal epithelial edema impairing vision. This compound is a skin sensitizer. Treat symptomatically as for contact dermatitis or thermal burn. Inducing vomiting is contraindicated because of the irritating nature of the compound. There is no specific antidote for ingestions. An individual having a dermal or pulmonary sensitization reaction to this material should be removed from further exposure to any diisocyanate. Treatment is essentially symptomatic.

5. FIRE-FIGHTING MEASURES

Suitable (and unsuitable) extinguishing media: Use foam, carbon dioxide and dry chemical. Use water spray for large fires. Cool fire exposed containers with water.

Specific hazards arising from the chemical: This product reacts with water producing heat and gases. Reaction may be violent. Closed containers may rupture when exposed to extreme heat or contaminated with water. Combustion may produce isocyanate vapors and other irritating, highly toxic gases. Exposure to heated diiscyanates can be extremely dangerous.

Special protective equipment and precautions for fire-fighters: Firefighters should wear positive pressure self-contained breathing apparatus and full protective clothing. Do not allow run-off from fire fighting to enter drains or water courses. Decontaminate equipment and protective clothing before reuse.

6. ACCIDENTAL RELEASE MEASURES

Personal precautions, protective equipment, and emergency procedures: Wear appropriate protective clothing as described in Section 8. Isolate the area and prevent access. Ventilate and remove ignition sources.

Methods and materials for containment and cleaning up: Contain and collect with an inert absorbent. Neutralize with a decontamination solution made up of 80% water and 20% non-ionic surfactant (such as Plurafac SL-60 or Tergitol TMN-10) or 90% water and 3-8% ammonium hydroxide or concentrated ammonia and 2% detergent. Wait 15 minutes. Collect into an open-head metal container. Repeat until the surface is completely decontaminated. Cover loosely with lid and allow container to vent for 72 hours to allow carbon dioxide to escape.

7. HANDLING AND STORAGE

Precautions for safe handling: Do not breathe vapors or mists. Use only with adequate ventilation. Wear respiratory protection if material is heated, sprayed, used in a confined space, or if the exposure limit is exceeded. Warning properties are not adequate to prevent overexposure from inhalation. Avoid contact with skin and eyes. Wear appropriate eye and skin protection. Wash thoroughly after handling. Do not breathe smoke and gases created by overheating or burning this material. Decomposition products can be highly toxic and irritating.

Conditions for safe storage, including any incompatibilities: Store in tightly closed containers to prevent moisture contamination. Do not reseal if contamination is suspected. Protect from physical damage.

8. EXPOSURE CONTROLS / PERSONAL PROTECTION

Exposure guidelines:

Homopolymer of Hexamethylene Diisocyanate	0.5 mg/m3 TWA Manufacturer 1.0 mg/m3 STEL Manufacturer
Hexamethylene-1,6-Diisocyanate	0.005 ppm TWA ACGIH TLV 0.02 ppm Ceiling Manufacturer

Appropriate engineering controls: Use with adequate general or local exhaust ventilation to maintain exposures below the occupational exposure limits.

Individual protection measures, such as personal protective equipment:
Respiratory protection: If the exposure limits are exceeded or if exposure levels are unknown, a NIOSH approved positive pressure air supplied respirator with a full facepiece or air supplied hood should be used.

In some situations where exposure levels are known to be below 10 times the exposure limit an air purifying respirator (organic vapor with particulate prefilter) can be used. A change schedule for cartridges is required. Selection and use of respiratory equipment must be in accordance with OSHA 1910.134 and good industrial hygiene practice.
Skin protection: Wear impervious gloves such as butyl rubber, neoprene or nitrile rubber.
Eye protection: Chemical safety goggles recommended.
Other: Impervious clothing as needed to prevent contact. An eye wash should be available in the immediate work area.
Medical Surveillance: A pre-placement physical should be given to all employees that will work with isocyanates. Employees with a prior isocyanate sensitization should be excluded from working with this product. A history of adult asthma, eczema and respiratory allergies are possible reasons for excluding or restricting the employee from working with this product. A comprehensive annual medical surveillance program should be instituted for all employees who work with isocyanates. Once a worker has been diagnosed as sensitized, no further exposure can be permitted.

9. PHYSICAL AND CHEMICAL PROPERTIES

Appearance (physical state, color, etc.): Pale yellow liquid
Odor: Odorless

Odor threshold: 0.01 (HDI)	**pH:** Not applicable
Melting Point/Freezing Point: -59.8°F / -51°C	**Boiling Point:** Decomposes
Flash point: 442.4 °F / 228°C	**Evaporation rate:** Not applicable
Flammability (solid, gas): Not flammable	
Flammable limits: LEL: Not applicable	**UEL:** Not applicable
Vapor pressure: Not applicable	**Vapor density:** Not applicable
Relative density: 1.17 @ 20°C	**Solubility(is):** Insoluble in Water
Partition coefficient: n-Octanol/water: logPow: 9.81 (calculated)	**Auto-ignition temperature:** >392°F / 200°C
Decomposition temperature: 482°F / 250°C (calculated)	**Viscosity:** 3,000 mPas@23°C

10. STABILITY AND REACTIVITY

Reactivity: None known.
Chemical stability: Stable
Possibility of hazardous reactions: Contact with water or temperatures above 350°F may cause polymerization.
Conditions to avoid: Avoid contact with heat, sparks and flames. Protect from freezing.
Incompatible materials: Avoid contact with water, alcohols, amines, bases and copper alloys.
Hazardous decomposition products: Thermal decomposition may produce carbon and nitrogen oxides, hydrogen cyanide and isocyanic acid.

11. TOXICOLOGICAL INFORMATION

Inhalation: Inhalation of vapors or mists may cause mucous membrane and respiratory irritation. Homopolymer of hexamethylene diisocyanate has been shown to cause respiratory sensitization. Symptoms include dryness of the throat, tightness of chest and difficulty in breathing. Symptoms may be delayed for several hours after exposure.
This product can produce asthmatic sensitization upon a single inhalation exposure to a relatively high concentration or upon repeated inhalation exposures to lower concentrations. Individuals with lung or breathing problems or prior allergic reactions to isocyanates must not be exposed to vapor or spray mist. The allergic respiratory reaction may be life threatening.
Ingestion: Swallowing may cause gastrointestinal irritation abdominal pain, nausea, vomiting and diarrhea.
Skin contact: Skin contact may cause mild irritation with redness, itching and swelling. May cause allergic skin reaction. Homopolymer of hexamethylene diisocyanate has been shown to be mildly irritating to rabbit skin. Animal tests have indicated that respiratory sensitization can result from skin contact with isocyanates.
Eye contact: May cause mild irritation with redness, tearing, stinging and swelling. Homopolymer of hexamethylene diisocyanate has been shown to causer slightly irritating to rabbit eyes.

Chronic effects from short- and long-term exposure: Prolonged exposure to diisocyanates or polyisocyanates may cause chronic irritation, decreased lung function and lung damage and conjunctivitis.

Reproductive Toxicity: This product is not expected to cause adverse reproductive or developmental effects.

Sensitization: Hexamethylene-1,6-diisocyanate has been shown to cause sensitization in a guinea pig maximization test.

Mutagenicity: Homopolymer of hexamethylene diisocyanate was negative the in the AMES test (with/without metabolic activation)

Carcinogenicity: None of the components are listed as a carcinogen by IARC, NTP, ACGIH or OSHA.

Acute Toxicity Values:
Homopolymer of hexamethylene diisocyanate: Oral rat LD50 >5,000 mg/kg; Inhalation rat LC50 390-453 mg/m3/4 hr; Dermal rabbit LD50 >5,000 mg/kg.

12. ECOLOGICAL INFORMATION

Ecotoxicity:
Homopolymer of hexamethylene diisocyanate: 96 hr LC0 Brachydanio rerio >100 mg/L; 48 hr EC0 daphnia magna >100 mg/L; 72 hr EC50 Scenedesmus subspicatus >1,000 mg/L

Persistence and degradability: Homopolymer of hexamethylene diisocyanate is not readily biodegradable.
Bioaccumulative potential: Not expected to bioacumulate.
Mobility in soil: No data available.
Other adverse effects: None known.

13. DISPOSAL CONSIDERATIONS

Dispose in accordance with all local, state and federal regulations. Incineration is the preferred method.

14. TRANSPORT INFORMATION

	UN Number	Proper shipping name	Hazard Class	Packing Group	Environmental Hazard
DOT	None	Not Regulated	None	None	None
TDG	None	Not Regulated	None	None	None
IMDG	None	Not Regulated	None	None	None
IATA	None	Not Regulated	None	None	None

Transport in bulk (according to Annex II of MARPOL 73/78 and the IBC Code): Not applicable – product is transported only in packaged form.

Special precautions:

15. REGULATORY INFORMATION

CERCLA: This product is not subject to CERCLA reporting requirements as it is sold. Many states have more stringent release reporting requirements. Report spills required under federal, state and local regulations.

SARA Hazard Category (311/312): Acute Health, Chronic Health

SARA 313 Information: This product contains the following chemicals subject to Annual Release Reporting Requirements Under SARA Title III, Section 313 (40 CFR 372): None

California Proposition 65
This product contains the following chemicals known to the State of California to cause cancer or reproductive toxicity (birth defects): None

EPA TSCA Inventory: All of the ingredients in this product are listed on the EPA TSCA Inventory.

CANADA:
Canadian CEPA: All of the ingredients in this product are listed on the Canadian DSL.
Canadian WHMIS Classification: Class D Division 2 Subdivision A (Very Toxic Material Causing other Toxic Effects), Class D Division 2 Subdivision B (Toxic Material Causing other Toxic Effects)
This product has been classified under the CPR and this MSDS discloses information elements required by the CPR.

16. OTHER INFORMATION

NFPA Rating: Health = 2 Flammability = 1 Instability = 1
HMIS Rating: Health = 2* Flammability = 1 Physical Hazard = 1

SDS Revision History: New SDS
Date of preparation: January 6, 2014
Date of last revision: New SDS

The above information is accurate to the best of our knowledge. However, since data, safety standards, and government regulations are subject to change and the conditions of handling and use, or misuse, are beyond our control, Dur-A-Flex, Inc. MAKES NO WARRANTY, EITHER EXPRESS OR IMPLIED, WITH RESPECT

TO THE COMPLETENESS OR CONTINUING ACCURACY OF THE INFORMATION CONTAINED HEREIN AND USE.

Poly-Crete HF, MD, SL, TF/WR, & NATURAL SL Resin
SAFETY DATA SHEET

1. IDENTIFICATION

Product Identifier: Poly-Crete HF, MD, SL, TF/WR, & NATURAL SL Resin
Product Code:

Recommended use: Floor Surfacing

Manufacturer Name: Dur-A-Flex, Inc.
95 Goodwin Street
East Hartford, CT 06108
Telephone number: 860-528-9838

Emergency phone number: 1-800- 424-9300 (CHEMTREC)

Date of Preparation: January 30, 2014

2. HAZARD(S) IDENTIFICATION

This product is one part of a 3 part product. Read and understand the hazard information on the SDS for Poly-Crete Hardener and Poly-Crete Aggregate before using this product.

Classification:

Physical	Health
Not Hazardous	Specific Target Organ Toxicity – Repeat Exposure Category 2

Labeling:

Warning!

Hazard statement(s)

May cause damage to kidneys through prolonged or repeated exposure.

Precautionary statement(s)

Do not breathe mist, vapors or spray.
Get medical attention if you feel unwell.
Dispose of contents and container in accordance with local and national regulations.

3. COMPOSITION / INFORMATION ON INGREDIENTS

Chemical name	CAS No.	Concentration
Polyester-Ether Polyol Blend	Mixture	1-15%
Diethylene Glycol	111-46-6	1-5%
Titanium Dioxide	13463-67-7	1-5%
Carbon Black	1333-86-4	<1%

The specific identity and/or exact percentage (concentration) of composition has been withheld as a trade secret.

4. FIRST-AID MEASURES

Inhalation: Remove victim to fresh air. If irritation occurs or breathing is difficult, get medical attention.
Skin contact: Wash with soap and water. If irritation develops and persists, get medical attention.
Eye contact: Flush with large quantities of water, holding the eyelids apart. Get medical attention if irritation persists.
Ingestion: If conscious, rinse mouth with water. Do not induce vomiting. Never give anything by mouth to an unconscious or convulsing person. Get medical attention.

Most important symptoms/effects, acute and delayed: Prolonged overexposure to diethylene glycol may cause kidney damage.

Indication of immediate medical attention and special treatment, if necessary: None expected under normal conditions of use. If large amounts are swallowed, get medical attention.

5. FIRE-FIGHTING MEASURES

Suitable (and unsuitable) extinguishing media: Use water spray, foam, carbon dioxide or dry chemical. Cool fire exposed containers with water.

Specific hazards arising from the chemical: Combustion may produce carbon oxides.

Special protective equipment and precautions for fire-fighters: Firefighters should wear positive pressure self-contained breathing apparatus and full protective clothing.

6. ACCIDENTAL RELEASE MEASURES

Personal precautions, protective equipment, and emergency procedures: Wear appropriate protective clothing as described in Section 8.

Environmental precautions: Avoid release to the environment. Report releases as required by local, state and federal authorities.

Methods and materials for containment and cleaning up: Contain and collect with an inert absorbent. Place into an appropriate container for disposal. Caution slip hazard. Wash spill site with soap and water.

7. HANDLING AND STORAGE

Precautions for safe handling: Avoid contact with eyes, skin and clothing. Avoid breathing vapors or mists. Wash thoroughly after handling and before eating, drinking, smoking or using the toilet. Use with adequate ventilation.

Conditions for safe storage, including any incompatibilities: Keep containers tightly closed in a dry, cool and well-ventilated place. Protect from physical damage. Store away from oxidizing agents.

8. EXPOSURE CONTROLS / PERSONAL PROTECTION

Exposure guidelines:

Polyol Blend	None Established
Diethylene Glycol	10 mg/m3 TWA AIHA WEEL
Titanium Dioxide	15 mg/m3 TWA OSHA PEL (total dust) 10 mg/m3 TWA ACGIH TLV
Carbon Black	3.5 mg/m3 TWA OSHA PEL 3 mg/m3 TWA ACGIH TLV (inhalable)

Appropriate engineering controls: Use with adequate general or local exhaust ventilation to maintain exposures below occupational exposure limits.

Personal Protective Equipment:
Respiratory protection: If the exposures are excessive, a NIOSH approved respirator with an organic vapor cartridge and a dust/mist prefilter or supplied air respirator is recommended. Selection and use of respiratory equipment must be in accordance with OSHA 1910.134 and good industrial hygiene practice.
Skin protection: Wear impervious gloves such as nitrile or butyl rubber.
Eye protection: Chemical safety goggles recommended.
Other: Impervious clothing as needed to prevent contact. An eye wash should be available in the immediate work area.

9. PHYSICAL AND CHEMICAL PROPERTIES

Appearance (physical state, color, etc.): Colored, viscous liquid
Odor: Faint aromatic odor

Odor threshold: Not available	**pH:** Not available
Melting Point/Freezing Point: - Not available	**Boiling Point:** 212°F / 100°C
Flash point: 540 °F / 282.2°C	**Evaporation rate:** <1 (butyl acetate = 1)
Flammability (solid, gas): Not applicable	
Flammable limits: LEL: Not applicable	**UEL:** Not applicable

Vapor pressure: Not available	**Vapor density:** >1
Relative density: >1	**Solubility:** Dispersible in water
Partition coefficient: n-Octanol/water: Not available	**Auto-ignition temperature:** Not available
Decomposition temperature: Not available	**Viscosity:** Not available

10. STABILITY AND REACTIVITY

Reactivity: None known.
Chemical stability: Stable
Possibility of hazardous reactions: None known.
Conditions to avoid: Avoid excessive heat.
Incompatible materials: Avoid contact with oxidizing agents.
Hazardous decomposition products: Thermal decomposition may produce carbon oxides.

11. TOXICOLOGICAL INFORMATION

Inhalation: Excessive inhalation of mists may cause mucous membrane and upper respiratory tract irritation.
Ingestion: Swallowing may cause gastrointestinal irritation, nausea and diarrhea.
Skin contact: Prolonged skin contact may cause irritation.
Eye contact: May cause irritation with redness and tearing.

Chronic effects from short- and long-term exposure: Prolonged overexposure to diethylene glycol has been shown to cause kidney damage in animal studies.

Reproductive Toxicity: This product is not expected to cause adverse reproductive or developmental effects.

Sensitization: None of the components have been shown to cause sensitization in humans or animals. .

Mutagenicity: This product is not expected to cause mutagenic activity.

Carcinogenicity: Carbon black is listed as "Possibly Carcinogenic to Humans" (Group 2B) by IARC. Carbon black is inextricably bound in a polymer matrix and no exposure occurs during use.

Acute Toxicity Values:
Polyol Blend: No toxicity data available.
Diethylene glycol: Oral rat LD50 12,565 mg/kg; Dermal rabbit LD50 11,890 mg/kg
Titanium Dioxide: Oral rat LD50 >5000 mg/kg; Inhalation rat LC50 > 6.82 mg/L /4 hr
Carbon Black: Oral rat LD50 >8000 mg/kg; Inhalation rat LC50 > 4.6 mg/m^3/4 hr

12. ECOLOGICAL INFORMATION

Ecotoxicity:
Polyol Blend: No data available
Diethylene glycol: 96 hr LC50 Lepomis macrochirus 1000 mg/L;
Titanium Dioxide: 72 hr EC50 Pseudokirchnerella subcapitata 61 mg/L

Carbon Black: 96 hr Danio rerio LC0 1000 mg/L; 24 hr EC50 daphnia magna >5600 mg/L; 72 hr EC50 >10000 mg/L

Persistence and degradability: Biodegradation is not applicable to inorganic substances such as carbon black and titanium dioxide. Diethylene glycol is readily biodegradable.
Bioaccumulative potential: Diethylene glycol has a BCF of 3. .
Mobility in soil: Diethylene glycol has a high mobility in soil.
Other adverse effects: None known.

13. DISPOSAL CONSIDERATIONS

Dispose in accordance with all local, state and federal regulations.

14. TRANSPORT INFORMATION

	UN Number	Proper shipping name	Hazard Class	Packing Group	Environmental Hazard
DOT	None	Not Regulated	None	None	None
TDG	None	Not Regulated	None	None	None
IMDG	None	Not Regulated	None	None	None
IATA	None	Not Regulated	None	None	None

Transport in bulk (according to Annex II of MARPOL 73/78 and the IBC Code): Not applicable – product is transported only in packaged form.

Special precautions:

15. REGULATORY INFORMATION

CERCLA: This product is not subject to CERCLA reporting requirements as it is sold. Many states have more stringent release reporting requirements. Report spills required under federal, state and local regulations.

SARA Hazard Category (311/312): Acute Health

SARA 313 Information: This product contains the following chemicals subject to Annual Release Reporting Requirements Under SARA Title III, Section 313 (40 CFR 372): None

California Proposition 65
This product contains the following chemicals known to the State of California to cause cancer or reproductive toxicity (birth defects): Toluene 108-88-3 (developmental, female reproductive toxicity) <1 ppm, Benzene (71-43-2) (cancer, developmental, male reproductive toxicity) <1 ppm, Ethylbenzene (100-41-4) (cancer) <1 ppm (carbon black, crystalline silica and titanium dioxide are inextricably bound).

EPA TSCA Inventory: All of the ingredients in this product are listed on the EPA TSCA Inventory.

CANADA:
Canadian WHMIS Classification: Class D Division 2 Subdivision B (Toxic Material Causing other Toxic Effects)
This product has been classified under the CPR and this SDS discloses information elements required by the CPR.

16. OTHER INFORMATION

NFPA Rating:	Health = 1	Flammability = 1	Instability = 0
HMIS Rating:	Health = 1	Flammability = 1	Physical Hazard = 0

SDS Revision History: Converted to GHS format. All sections revised
Date of preparation: January 30, 2014
Date of last revision: New SDS

The above information is accurate to the best of our knowledge. However, since data, safety standards, and government regulations are subject to change and the conditions of handling and use, or misuse, are beyond our control, Dur-A-Flex, Inc. MAKES NO WARRANTY, EITHER EXPRESS OR IMPLIED, WITH RESPECT TO THE COMPLETENESS OR CONTINUING ACCURACY OF THE INFORMATION CONTAINED HEREIN AND USE.

Poly-Crete Hardener: MD, SL, HF, TF and NATURAL SL
SAFETY DATA SHEET

1. IDENTIFICATION

Product Identifier: Poly-Crete Hardener: MD, SL, HF, TF, and NATURAL SL
Product Code:

Recommended use: Floor Surfacing

Manufacturer Name: Dur-A-Flex, Inc.
95 Goodwin Street
East Hartford, CT 06108
Telephone number: 860-528-9838

Emergency phone number: 1-800- 424-9300 (CHEMTREC)

Date of Preparation: January 9, 2014

2. HAZARD(S) IDENTIFICATION

This product is one part of a 3 part product. Read and understand the hazard information on the SDS for Poly-Crete Resin before using this product.

Classification:

Physical	Health
Not Hazardous	Acute Toxicity Category 4 – Inhalation Eye Irritation Category 2 Skin Irritation Category 2 Skin Sensitization Category 1 Respiratory Sensitization Category 1 Specific Target Organ Toxicity – Single Exposure Category 3 (Respiratory Irritation) Specific Target Organ Toxicity – Repeat Exposure Category 2

Labeling:

Danger!

Hazard statement(s)

Harmful if inhaled.
Causes skin irritation.
May cause an allergic skin reaction.
Causes serious eye irritation.
May cause allergy or asthma symptoms or breathing difficulties if inhaled.
May cause respiratory irritation.
May cause damage to lungs through prolonged or repeated inhalation exposure.

Precautionary statement(s)

Do not breathe mist, vapors or spray.
Use only outdoors or in a well-ventilated area.
Contaminated work clothing should not be allowed out of the workplace.
Wash thoroughly after handling.
Wear protective gloves, eye protection and face protection.
In case of inadequate ventilation wear respiratory protection.
IF ON SKIN: Wash with plenty of soap and water.
If skin irritation or rash occurs: Get medical attention.
Take off contaminated clothing and wash it before reuse.
IF IN EYES: Rinse cautiously with water for several minutes.
Remove contact lenses, if present and easy to do. Continue rinsing.
If eye irritation persists: Get medical attention.
IF INHALED: Remove person to fresh air and keep comfortable for breathing.
Call a POISON CENTER if you feel unwell.
Get medical attention if you feel unwell.
Store in a well-ventilated place. Keep container tightly closed.
Store locked up.
Dispose of contents and container in accordance with local and national regulations.

3. COMPOSITION / INFORMATION ON INGREDIENTS

Chemical name	CAS No.	Concentration
4,4'-Diphenylmethane diisocyanate	101-68-8	40-60%
Polyisocyanate based on MDI	Proprietary	40-60%

The specific identity and/or exact percentage (concentration) of composition has been withheld as a trade secret.

4. FIRST-AID MEASURES

Inhalation: Immediately remove to fresh air. If breathing is difficult have qualified personnel administer oxygen. If breathing has stopped, administer artificial respiration. Get immediate medical attention. Asthma-like symptoms may develop immediately or delayed up to several hours.
Skin contact: Immediately remove contaminated clothing. Wash skin thoroughly with soap and water. If rash or irritation develops, get medical attention. Launder clothing before re-use.
Eye contact: Immediately flush with large quantities of water for 15 minutes, holding the eyelids apart. Get medical attention if irritation develops.
Ingestion: If conscious, rinse mouth with water. Never give anything by mouth to an unconscious or convulsing person. DO NOT INDUCE VOMITING. Get medical attention.

Most important symptoms/effects, acute and delayed: Irritating to eyes, skin and respiratory system. May cause allergic skin and respiratory reaction. If an allergic respiratory reaction occurs, get immediate medical attention. Symptoms may be delayed. Individuals sensitized to isocyanates may have a life-threatening allergic reaction.

Indication of immediate medical attention and special treatment, if necessary: If skin or respiratory sensitization occurs, get immediate medical attention. Symptoms may be delayed for several hours after exposure. Respiratory sensitization may be life threatening.

5. FIRE-FIGHTING MEASURES

Suitable (and unsuitable) extinguishing media: Use foam, carbon dioxide and dry chemical. Cool fire exposed containers with water.

Specific hazards arising from the chemical: This product reacts with water producing heat and gases. Reaction may be violent. Closed containers may rupture when exposed to extreme heat or contaminated with water. Combustion may produce isocyanate vapors and other irritating, highly toxic gases. Exposure to heated diisocyanates can be extremely dangerous.

Special protective equipment and precautions for fire-fighters: Firefighters should wear positive pressure self-contained breathing apparatus and full protective clothing. Do not allow run-off from fire fighting to enter drains or water courses. Decontaminate equipment and protective clothing before reuse.

6. ACCIDENTAL RELEASE MEASURES

Personal precautions, protective equipment, and emergency procedures: Wear appropriate protective clothing as described in Section 8. Isolate the area and prevent access. Ventilate and remove ignition sources.

Methods and materials for containment and cleaning up: Contain and collect with an inert absorbent. Neutralize with a decontamination solution made up of 90% water and 10% concentrated ammonia and 2% detergent. Use a 10 to 1 ratio. Wait 15 minutes. Collect into a suitable container. Repeat until the surface is completely decontaminated. Cover loosely with lid and allow container to vent for 48 hours to allow carbon dioxide to escape.

7. HANDLING AND STORAGE

Precautions for safe handling: Do not breathe vapors or mists. Use only with adequate ventilation. Wear respiratory protection if material is heated, sprayed, used in a confined space, or if the exposure limit is exceeded. Warning properties are not adequate to prevent overexposure from inhalation. Avoid contact with skin and eyes. Wear appropriate eye and skin protection. Wash thoroughly after handling. Do not breathe smoke and gases created by overheating or burning this material. Decomposition products can be highly toxic and irritating.

Conditions for safe storage, including any incompatibilities: Store in tightly closed containers to prevent moisture contamination. Do not reseal if contamination is suspected. Protect from physical damage.

8. EXPOSURE CONTROLS / PERSONAL PROTECTION

Exposure guidelines:

4,4'-Diphenylmethane diisocyanate	00.005 ppm TWA ACGIH TLV 0.02 ppm Ceiling OSHA PEL
Polyisocyanate based on MDI	None Established

Appropriate engineering controls: Use with adequate general or local exhaust ventilation to maintain exposures below the occupational exposure limits.

Personal Protective Equipment:
Respiratory protection: If the exposure limits are exceeded or if exposure levels are unknown, a NIOSH approved positive pressure air supplied respirator with a full facepiece or air supplied hood should be used. In some situations where exposure levels are known to be below 10 times the exposure limit an air purifying respirator (organic vapor with particulate prefilter) can be used. A change schedule for cartridges is required. Selection and use of respiratory equipment must be in accordance with OSHA 1910.134 and good industrial hygiene practice.
Skin protection: Wear impervious gloves such as neoprene or butyl rubber.
Eye protection: Chemical safety goggles recommended.
Other: Impervious clothing as needed to prevent contact. A safety shower and eye wash should be available in the immediate work area.
Medical Surveillance: A pre-placement physical should be given to all employees that will work with isocyanates. Employees with a prior isocyanate sensitization should be excluded from working with this product. A history of adult asthma, eczema and respiratory allergies are possible reasons for excluding or restricting the employee from working with this product. A comprehensive annual medical surveillance program should be instituted for all employees who work with isocyanates. Once a worker has been diagnosed as sensitized, no further exposure can be permitted.

9. PHYSICAL AND CHEMICAL PROPERTIES

Appearance (physical state, color, etc.): Dark amber liquid
Odor: Faint aromatic odor

Odor threshold: 0.384 (MDI)	**pH:** Not applicable
Melting Point/Freezing Point: Not available	**Boiling Point:** 392°F / 200°C
Flash point: >392 °F / >200°C	**Evaporation rate:** Not available
Flammability (solid, gas): Not flammable	
Flammable limits: LEL: Not applicable	**UEL:** Not applicable
Vapor pressure: 0.00001 mmHg @25°C	**Vapor density:** 8.5
Relative density: 1.24	**Solubility(is):** Reacts in Water
Partition coefficient: n-Octanol/water: Not available	**Auto-ignition temperature:** Not available
Decomposition temperature: Not available	**Viscosity:** 35 mPas@25°C

10. STABILITY AND REACTIVITY

Reactivity: None known.

Chemical stability: Stable
Possibility of hazardous reactions: Contact with water or temperature greater than 400°F may cause polymerization.
Conditions to avoid: Avoid contact with heat, sparks and flames. Protect from freezing.
Incompatible materials: Avoid contact with water, alcohols, amines, acids and strong bases. May damage plastics and rubber.
Hazardous decomposition products: Thermal decomposition may produce carbon and nitrogen oxides, hydrogen cyanide and aromatic isocyanates.

11. TOXICOLOGICAL INFORMATION

Inhalation: Inhalation of vapors or mists may cause mucous membrane and respiratory irritation. 4,4'-Diphenylmethane diisocyanate has been shown to cause respiratory sensitization. Symptoms include dryness of the throat, tightness of chest and difficulty in breathing. Symptoms may be delayed for several hours after exposure. This product can produce asthmatic sensitization upon a single inhalation exposure to a relatively high concentration or upon repeated inhalation exposures to lower concentrations. Individuals with lung or breathing problems or prior allergic reactions to isocyanates must not be exposed to vapor or spray mist. The allergic respiratory reaction may be life threatening.
Ingestion: Swallowing may cause gastrointestinal irritation abdominal pain, nausea, vomiting and diarrhea.
Skin contact: Skin contact may cause irritation with redness, itching and swelling. May cause allergic skin reaction. 4,4'-Diphenylmethane diisocyanate has been shown to be irritating to rabbit skin. Animal tests have indicated that respiratory sensitization can result from skin contact with isocyanates.
Eye contact: May cause irritation with redness, tearing, stinging and swelling. 4,4'-Diphenylmethane diisocyanate has been shown to cause irritation to rabbit eyes.

Chronic effects from short- and long-term exposure: Prolonged exposure to 4,4'-diphenylmethane diisocyanate may cause chronic irritation, decreased lung function and lung damage and conjunctivitis. 4,4'-Diphenylmethane has been shown to cause damage to the olfactory epithelium after repeated inhalation in a repeat dose study in rats.

Reproductive Toxicity: 4,4'-Diphenylmethane diisocyanate has been shown to cause developmental toxicity only at doses that were maternally toxic.

Sensitization: 4,4'-Diphenylmethane diisocyanate has been shown to cause sensitization in a skin sensitization study with guinea pigs.

Mutagenicity: 4,4'-Diphenylmethane diisocyanate was negative the in the AMES test (with/without metabolic activation) and in an in vivo micronucleus assay.

Carcinogenicity: None of the other components are listed as a carcinogen by IARC, NTP, ACGIH or OSHA.

Acute Toxicity Values:
4,4'-Diphenylmethane diisocyanate: Oral rat LD50 >2,000 mg/kg; Inhalation rat LC10 > 2.24 mg/L/1 hr; Dermal rabbit LD50 >9,400 mg/kg.
Polyisocyanate based on MDI: No acute toxicity data available.

12. ECOLOGICAL INFORMATION

Ecotoxicity:
4,4'-Diphenylmethane diisocyanate: 96 hr LC50 Oryzias latipes > 3000 mg/L; 48 hr EC50 daphnia magna 129.7 mg/L; 72 hr EC50 Desmodesmus subspicatus > 1640 mg/L (structurally similar chemical)
Polyisocyanate based on MDI: No data available

Persistence and degradability: 4,4'-Diphenylmethane diisocyanate is not readily biodegradable.
Bioaccumulative potential: 4,4'-Diphenylmethane diisocyanate has a calculated BCF of 200.
Mobility in soil: No data available.
Other adverse effects: None known.

13. DISPOSAL CONSIDERATIONS

Dispose in accordance with all local, state and federal regulations. Incineration is the preferred method.

14. TRANSPORT INFORMATION

	UN Number	Proper shipping name	Hazard Class	Packing Group	Environmental Hazard
DOT	None	Not Regulated	None	None	None
TDG	None	Not Regulated	None	None	None
IMDG	None	Not Regulated	None	None	None
IATA	None	Not Regulated	None	None	None

Transport in bulk (according to Annex II of MARPOL 73/78 and the IBC Code): Not applicable – product is transported only in packaged form.

Special precautions:

15. REGULATORY INFORMATION

CERCLA: This product has a Reportable Quantity (RQ) of 10,000 lbs. based on the RQ for 4,4'-Diphenylmethane diisocyanate of 5,000 lbs. Releases above the RQ must be reported to the National Response Center. Many states have more stringent release reporting requirements. Report spills required under applicable federal, state and local regulations.

SARA Hazard Category (311/312): Acute Health, Chronic Health

SARA 313 Information: This product contains the following chemicals subject to Annual Release Reporting Requirements Under SARA Title III, Section 313 (40 CFR 372): None

California Proposition 65
This product contains the following chemicals known to the State of California to cause cancer or reproductive toxicity (birth defects): None

EPA TSCA Inventory: All of the ingredients in this product are listed on the EPA TSCA Inventory.

CANADA:
Canadian CEPA: All of the ingredients in this product are listed on the Canadian DSL.
Canadian WHMIS Classification: Class D Division 2 Subdivision A (Very Toxic Material Causing other Toxic Effects), Class D Division 2 Subdivision B (Toxic Material Causing other Toxic Effects)
This product has been classified under the CPR and this MSDS discloses information elements required by the CPR.

16. OTHER INFORMATION

NFPA Rating:	Health = 2	Flammability = 1	Instability = 1
HMIS Rating:	Health = 2*	Flammability = 1	Physical Hazard = 1

SDS Revision History: Converted to GHS format. All sections revised.
Date of preparation: January 9, 2014
Date of last revision: New SDS

The above information is accurate to the best of our knowledge. However, since data, safety standards, and government regulations are subject to change and the conditions of handling and use, or misuse, are beyond our control, Dur-A-Flex, Inc. MAKES NO WARRANTY, EITHER EXPRESS OR IMPLIED, WITH RESPECT TO THE COMPLETENESS OR CONTINUING ACCURACY OF THE INFORMATION CONTAINED HEREIN AND USE.

Poly-Crete Aggregate MD, SL, HF and TF/WR
SAFETY DATA SHEET

1. IDENTIFICATION

Product Identifier: Poly-Crete Aggregate MD, SL, HF and TF/WR

Recommended use: Floor Surfacing

Manufacturer Name: Dur-A-Flex, Inc.
95 Goodwin Street
East Hartford, CT 06108
Telephone number: 860-528-9838

Emergency phone number: 1-800- 424-9300 (CHEMTREC)

Date of Preparation: January 13, 2014

2. HAZARD(S) IDENTIFICATION

This product is one part of a 3 part product. Read and understand the hazard information on the SDS for Poly-Crete Resin and Poly-Crete Hardener before using this product.

Classification:

Physical	Health
Not Hazardous	Skin Irritation Category 2 Eye Damage Category 1 Skin Sensitization Category 1 Specific Target Organ Toxicity – Single Exposure Category 3 (Respiratory Irritation) Carcinogenicity Category 1A Specific Target Organ Toxicity – Repeat Exposure Category 1

Labeling:

Danger!

Hazard statement(s)

Causes skin irritation.
Causes serious eye damage.
May cause an allergic skin reaction.

Precautionary statement(s)

Obtain special instructions before use.
Do not handle until all safety precautions have been read and understood.

May cause respiratory irritation.
May cause cancer by inhalation.
Causes damage to lungs through prolonged or repeated inhalation exposure.

Do not breathe dust, fume.
Wash thoroughly after handling.
Do not eat, drink or smoke when using this product.
Use only outdoors or in a well-ventilated area.
Contaminated work clothing should not be allowed out of the workplace.
Wear protective gloves, protective clothing, eye protection or face protection.
IF ON SKIN: Wash with plenty of soap and water.
If skin irritation or rash occurs: Get medical attention.
Take off contaminated clothing and wash it before reuse.
IF IN EYES: Rinse cautiously with water for several minutes.
Remove contact lenses, if present and easy to do. Continue rinsing.
Immediately call a POISON CENTER or doctor.
IF INHALED: Remove person to fresh air and keep comfortable for breathing.
Call a POISON CENTER if you feel unwell.
IF exposed or concerned: Get medical attention.
Store in a well-ventilated place. Keep container tightly closed.
Store locked up.
Dispose of contents and container in accordance with local and national regulations.

3. COMPOSITION / INFORMATION ON INGREDIENTS

Chemical name	CAS No.	Concentration
Portland Cement	65997-15-1	5-95%
Crystalline Silica	14808-60-7	0-90%
Calcium Sulfate	7778-18-9	0-10%
Iron Oxide	1309-37-1	0-15%
Calcium Carbonate	1317-65-3	0-5%
Magnesium Oxide	1309-48-4	0-5%
Calcium Oxide	1305-78-8	0-5%
Calcium Hydroxide	1305-62-0	0-5%

The specific identity and/or exact percentage (concentration) of composition has been withheld as a trade secret.

4. FIRST-AID MEASURES

Inhalation: Remove to fresh air. If breathing is difficult, administer oxygen. If breathing has stopped, give artificial ventilation. Get medical attention if irritation persists.
Skin contact: Remove contaminated clothing and launder before reuse. Wash skin with a cool water and pH-neutral soap. Get medical attention if irritation develops or persists.

Eye contact: Immediately flush eyes with large quantities of water for at least 15 minutes, holding the eyelids apart. Get immediate medical attention.
Ingestion: If swallowed, drink 1 or 2 glasses of water to dilute. Never give anything by mouth to an unconscious or convulsing person. Get immediate medical attention.

Most important symptoms/effects, acute and delayed: Dust may cause eye and skin irritation or burns. Wet cement may cause eye and skin damage. May cause skin sensitization. Inhalation of dust may cause mucous membrane and respiratory irritation. Prolonged overexposure to respirable crystalline silica may cause lung disease (silicosis) and increase the risk of lung cancer. Risk of cancer depends on duration and level of exposure

Indication of immediate medical attention and special treatment, if necessary: If eye or skin burns occur, get immediate medical attention. For ingestion, get immediate medical attention.

5. FIRE-FIGHTING MEASURES

Suitable (and unsuitable) extinguishing media: Use media appropriate to the surrounding fire.

Specific hazards arising from the chemical: None known.

Special protective equipment and precautions for fire-fighters: Firefighters should wear positive pressure self-contained breathing apparatus and full protective clothing.

6. ACCIDENTAL RELEASE MEASURES

Personal precautions, protective equipment, and emergency procedures: Wear appropriate protective clothing as described in Section 8.

Environmental precautions: Report releases as required by local and federal authorities.

Methods and materials for containment and cleaning up: Collect using dustless method and place in appropriate container for use or disposal. Do not use compressed air.

7. HANDLING AND STORAGE

Precautions for safe handling: Avoid contact with the eyes and skin. Do not breathe dust. Wear protective clothing and equipment as described in Section 8. Use with adequate ventilation and proper dust collection methods to keep exposure level below occupational exposure limits. Wash thoroughly with soap and water after use.

Empty containers retain product residues. Follow all SDS precautions in handling empty containers.

Conditions for safe storage, including any incompatibilities: Keep dry until ready to use. Store in a cool, dry, well ventilated area away from incompatible materials. Protect from physical damage.

8. EXPOSURE CONTROLS / PERSONAL PROTECTION

DUR-A-FLEX
INNOVATION FROM THE FLOOR UP

MACRO CHIP COLOR BLENDS

WHEAT

MARINA

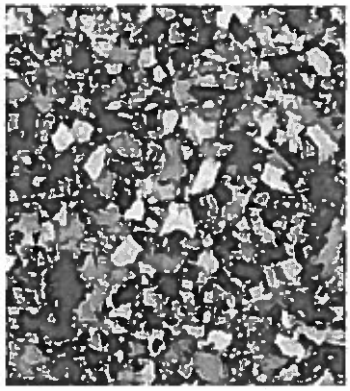

OYSTER SHELL

PEWTER

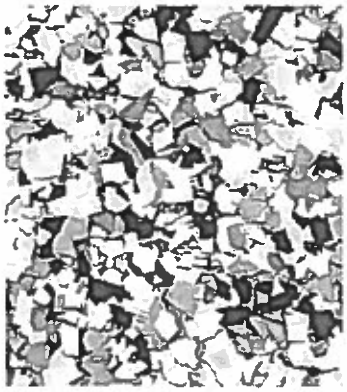

COBBLESTONE

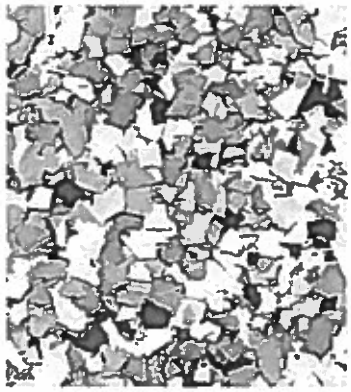

SCARLET

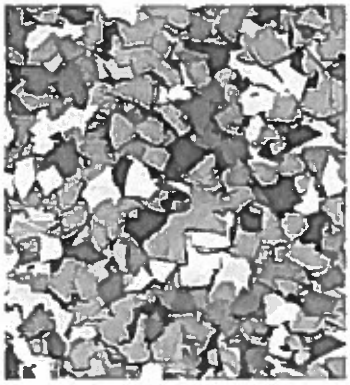

COBALT

CALYPSO

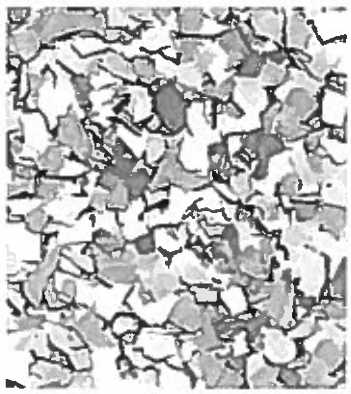

GLACIER

The samples shown are only close approximations and should not be used for specification purposes.
Contact Dur-A-Flex to obtain actual samples for best color selection.

CONNECTICUT | ILLINOIS | CALIFORNIA | Tel: 860.528.9838 | Fax: 860.528.2802 | www.Dur-A-Flex.com

DUR-A-FLEX
INNOVATION FROM THE FLOOR UP

MICRO CHIP COLOR BLENDS

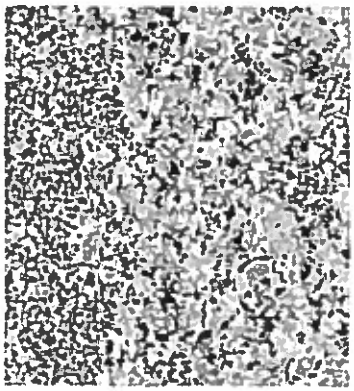

SHALE

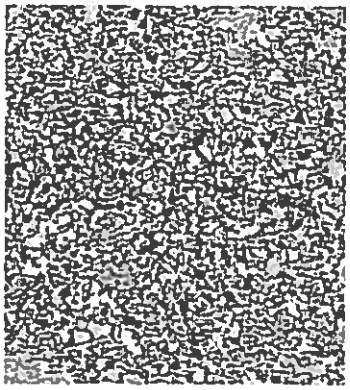

ACADIA

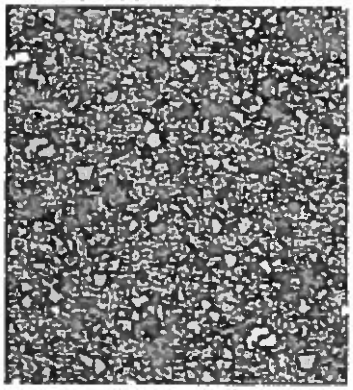

OLIVE STONE

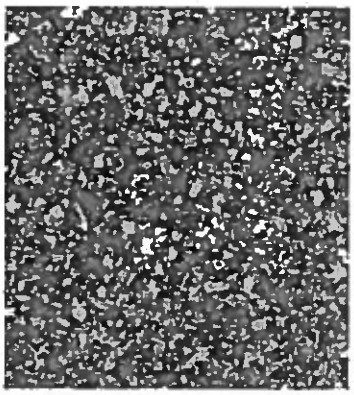

RED ROCK

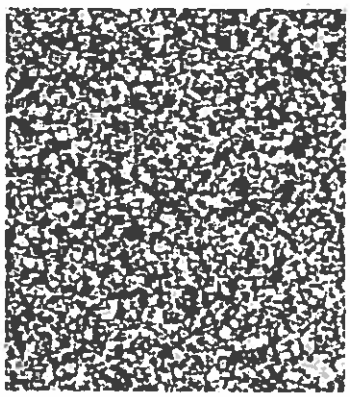

GALAXY

TUSCANY

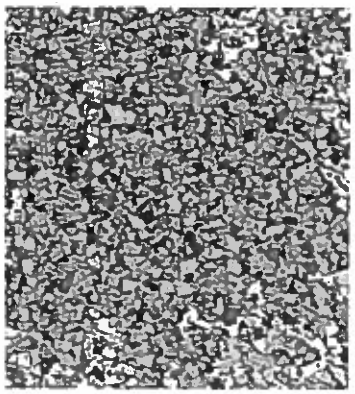

OCEAN

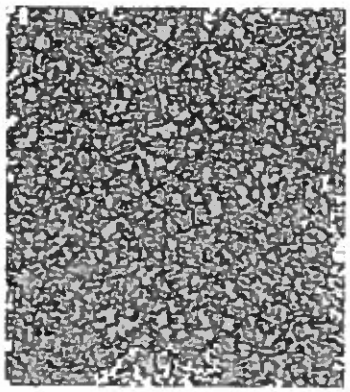

SEA GLASS

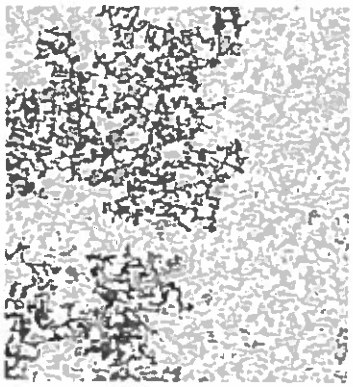

SAHARA

The samples shown are only close approximations and should not be used for specification purposes.
Contact Dur-A-Flex to obtain actual samples for best color selection.

CONNECTICUT | ILLINOIS | CALIFORNIA | Tel: 860.528.9838 | Fax: 860.528.2802 | www.Dur-A-Flex.com

DUR-A-FLEX
INNOVATION FROM THE FLOOR UP

SURFACE PREPARATION GUIDELINES

DUR-A-FLEX, INC. has developed this document to help Facility Owners, Architects, Engineers, Specification Writers, and Contractors gain a better understanding of the importance of a properly prepared substrate, and the methods to achieve an appropriate bond. This document is intended to be a general guideline, for specific jobsite information, please contact your local DUR-A-FLEX Representative.

There are many satisfactory methods of preparing a substrate to receive a DUR-A-FLEX flooring system. The preparation method is typically chosen based on service requirements, time allowed for entire process and accessibility.

PERSONAL PROTECTION EQUIPMENT

It is the responsibility of the surface preparation contractor and the flooring contractor to insure that all personnel are properly protected from hazards. DUR-A-FLEX is committed to promoting awareness regarding these potential hazards. All DUR-A-FLEX products are rated according to the Hazardous Material Identification System (HMIS). OSHA regulations specify when, where and how workers are to be protected. These regulations and the local OSHA officials should be consulted as necessary to insure proper protection, compliance with the law, and to avoid liability issues. Safety and health issues should be addressed prior to the start the job.

TESTING

MOISTURE CONCERNS

Please refer to the Floor Evaluation Guidelines in the Contractor's Center of our website to assist in determining the condition of the concrete.

Testing For An Existing Sealer

Test to see if the floor is "sealed" by pouring a small amount of muriatic acid on the floor in several spots. If it "froths" instantly, the floor is not sealed. If the acid doesn't froth immediately, a sealer and/or paint is present and must be removed by scarifying, steel shot blasting or other mechanical methods.

Salt Contamination Testing

Salt contaminated slabs that contain steel reinforcement are very susceptible to corrosion of the reinforcing steel. As the steel corrodes it expands causing cracking, delamination of concrete and any toppings bonded to it and eventually, structural failure of the slab. Obvious signs of chloride or salt contamination are spalled concrete with exposed, rusted reinforcing steel. Testing is recommended to determine the depth of contamination and the extent of corrosion activity. A Litmus Test for pH will determine the presence of chloride or acid contamination, if the pH is below 10.

Bond Test

The purpose of the bond test is to make sure preparation method is adequate for the primer to bond to the substrate. The test is done only when applying MMA systems. For more information on bond test refer to CRYL-A-PRIME data sheet on our website @ www.dur-a-flex.com.

REMOVAL AND REPAIR

ASTM D 4258-83 Standard practice for surface cleaning concrete for coating.
This practice includes surface cleaning of concrete to remove grease, dirt, and loose material prior to the application of coatings. Procedures include vacuum cleaning, air blast cleaning, water cleaning, detergent water cleaning, and steam cleaning.

Removal of bond inhibiting contaminants
This includes, but is not limited to removal of oils, grease, wax, sealers, curing compounds, laitance, salts and any other hydrocarbon based materials. This will ensure that a good bond takes place between the resinous flooring and the concrete substrate.

Removal of Adhesives, Mastics and Membranes
In many retrofit projects, existing tile, VCT or sheet goods are being replaced with polymer flooring systems. Removal of the floor finish will often leave a layer of some type of mastic, adhesive or membrane. In thin applications these materials can often be totally cleaned up by shotblasting the concrete. In thicker applications, the steel shot will tend to bounce, requiring additional preparation with the use of scarifying equipment or possibly even the use of chemical strippers. Wherever possible, consult the DUR-A-FLEX Tech Service Department or your local DUR-A-FLEX Flooring Contractor and schedule a site visit to investigate the best removal methods.

Removal of Existing Seamless Floor
Like mastics and adhesives, the need to remove an existing seamless floor will occasionally arise. There has been much progress made in the development of equipment for removal of resurfacers. Typically, removal requires a heavy grinder with "rotating heads". These heads can be outfitted with different "teeth" or carbide "blades" for removal of a particular type of overlay.

REASONS FOR SURFACE PREPARATION

Surface preparation of a concrete substrate is required to remove surface laitance to create a surface profile and porosity for adhesion of polymer floor systems.

METHODS OF SURFACE PREPARATION

Care should be taken to define the degree of abrasion required for the coating system so that the concrete will not be eroded beyond what is necessary. All concrete surfaces should be abraded to remove laitance and contaminants. The following Table describes the required profiles according to the ICRI guidelines for various coating systems.

Coating	Coating Thickness	Concrete Surface Profile (CSP)
Sealers	3 mil	CSP 2-3
High-Build	10-40 mil	CSP 3-4
Self Leveling	50 mils-1/8"	CSP 4-5
Polymer Overlay	1/8-1/4"	CSP 5-7

Shotblasting
Shotblasting is the recommended method of surface preparation of concrete for most polymer floor installations. Shotblast equipment utilizes an alloy wheel spinning at high speeds to throw small steel particles at the substrate in a controlled, dry, 99% dust-free operation. This process removes surface contamination, adds profile and vacuums the concrete clean in one process. The size and angularity of shot, along with the travel speed of the unit, can be adjusted to determine the degree of the surface profile. Because shotblasting is a dry preparation process, it allows the installation to begin immediately after completion of prep (surface must be dry before blasting). Shotblasting will also identify weak areas in the surface of the concrete. **NOTE:** When selecting shotblast preparation for thin film coating systems (under 20 mils) be aware that a blast pattern or track lines may be visible.

Diamond Grinding
Diamond grinding should only be used in areas inaccessible to shotblasting and then only with coarse diamond wheel.

Scarifying
Scarifying is primarily used for the removal of deteriorated concrete, coatings and polymer flooring systems.

Hand Tool
Hand tool preparation consists of the use of mechanical tools and equipment designed to abrade or chip away the surface of the concrete. Common tools available include chipping hammers, hand held diamond grinders and concrete crack chasing saws. These tools are typically used to make keyways, prepare edges against walls and columns.

TYPES OF SUBSTRATES

Regular Concrete
Regular concrete surface must be prepared with a steel shot-blast machine, scarifier or diamond grinder. Floors with oil, grime and grease should first be cleaned with Simoniz 969 Cleaner/Degreaser before preparing. Allow floor to dry. Good ventilation, fans and/or auxiliary heat will accelerate drying time. Do not use oil fired portable heaters.

Replacement of Structurally Deteriorated Concrete
Replacement of structurally deteriorated concrete must be done in accordance with The International Concrete Repair Institute (ICRI) Bulletin. Patching material must be a DUR-A-FLEX approved patching material. Make sure of minimum cure time before installation of resinous flooring. DUR-A-FLEX flooring Contractors should be contracted whenever possible to complete these repairs appropriately.

Fiber Filled Concrete
Fiber filled concrete must be burned with a propane weed burner, swept and vacuumed perfectly clean and then primed. When primer has completely cured, the floor must be sanded and tack ragged (This step may not be necessary for thick resurfacing systems).

Quarry/Ceramic Tile
Quarry/Ceramic tile have been successfully resurfaced on many projects without removal of tile and setting bed. A site investigation along with cores through the entire slab will help identify the type of setting bed, the existence of any waterproofing membranes, additional toppings, or other unusual existing conditions. Water trapped within the floor will create long-term sanitation and performance problems.

If the tile is well bonded and placed over an unsaturated latex setting bed, the floor may be resurfaced as follows: Surface must be mechanically abraded with a steel shot-blast machine, scarifier or diamond grinder and vacuumed perfectly clean. "Tack rag" area to remove dust and to soften surface. Apply DUR-A-FLEX recommended Poly-Crete or Hybri-Flex systems or DUR-A-GLAZE TIECOAT II or CRYL-A-PRIME P-101 with CRYL-A-BOND MT primer to the entire area immediately and allowed to cure.

Existing Epoxy Coating/Resurfacer
Existing seamless floors may be resealed or resurfaced from time to time due to excessive wear or the need to change the appearance or skid-resistance of the floor. The existing floor should first be cleaned and degreased with EZ-CLEAN floor cleaner/degreaser. It must then be mechanically abraded with a floor-sanding machine or a steel shot blast machine to totally remove gloss. Vacuum perfectly clean. "Tack rag" area to remove dust and to soften surface. Apply DUR-A-GLAZE TIE-COAT II to entire area immediately followed by subsequent epoxy coatings.

Plywood
The plywood substrate must be sound and non-flexing under the expected load. Typical plywood substrate must be exterior or marine grade, new, clean, and smooth finish (NO KNOTS).

Two layers with staggered joints are required. Plywood should be positively fastened to the existing surface with a high quality construction adhesive as well as a 6" screw pattern.

For further information on plywood substrates, please contact your local sales representative or DUR-A-FLEX technical department.

Walls
For Dur-A-Wall Applications:

Block wall: Apply Dulux (ICI) block filler to fill pores over new or existing concrete block following manufacturer's instructions.

Drywall: Drywall must be finished to a level #4 or #5 finish prior to coating. Prime with ICI GRIPPER Multipurpose primer or GLIDDEN GRIPPER primer. Substrate will affect final appearance of wall coating.

Cast in place Concrete and Ceramic Tile:
Use DUR-A-GLAZE RAPID PATCH for cracks, holes, spalls, and voids in concrete up to ¼" thick. **Multiple applications of filler material maybe necessary. Sand or grind between coats to achieve a smooth surface.**

NOTE: Tile and block grout lines may "mirror through" the finished system even though the surface is smooth.

CRACKS AND JOINTS
Refer to Joint Guidelines for complete joint details on our website in the Contractor Center section @ www.dur-a-flex.com.

Use DUR-A-GLAZE RAPID PATCH for cracks, holes, spalls, and voids in concrete up to ¼" thick.

0814

DUR-A-FLEX
INNOVATION FROM THE FLOOR UP

FLOOR EVALUATION & GUIDELINES

Flooring problems on concrete from vapor emission, dew point, alkalinity; pH, etc. cause millions of dollars in repair and replacement costs annually. By recognizing potential problems, testing for and mitigating them, steps can be taken to ensure a long lasting, successful flooring installation.

What is Moisture Vapor Emission?
Water is added to turn cement, sand and aggregate into a concrete slab. There is a critical volume of water needed to "hydrate" the concrete and an excess volume of water used to make the concrete pour-able and workable. It is this excess that can emit from the slab. Moisture is also a concern when the concrete slab has no vapor retarder installed, or the vapor retarder has been punctured.

How does moisture move through the slab?
Capillary moisture: ground water touches the bottom of the concrete slab, and wicks into the concrete through microscopic bleeder water channels until it reaches the coating surface. As the water comes through the slab, it brings calcium/sodium salts with it that can degrade the bond line and cause the coating to delaminate.

Osmotic Moisture: actual water vapor transmission through the concrete slab condenses again at the bond line and causes the same problem as in the capillary moisture case. This can happen when the water table is far below the slab with an improperly installed or missing vapor barrier. Three conditions are needed for osmosis to occur: a semi-permeable membrane, which can be the polymer primer or the upper layers of the slab, a gradient of ionic activity (soluble salts, which are indigenous to concrete), and a source of moisture vapor. If any one of these three things is removed, osmosis cannot occur.

Hydrostatic: the surrounding water table is higher than the concrete slab on grade. Because water seeks its own level, it is forced through the slab under pressure. Both the pressure and the water cause the coating to delaminate.

The volume of moisture that can pass through a slab depends on the porosity of the slab. Porosity is a direct result of the water/cement ratio in the concrete mix design. As the water/cement ratio increases, the porosity of the concrete increases exponentially.

What is the traditional failure mode because of "moisture" problems?
There are two ways a polymeric floor can fail: (1) the floor system was never able to bond properly at the time of installation or (2) there were factors present at the time of installation to cause the bond to fail. Symptoms of failure on an already installed floor may include bubbles, blisters and/or delamination.

What causes a polymeric floor to fail?
Traditional theory has focused primarily on moisture failure such as capillary and hydrostatic, however more recent research has found that although moisture plays a role, it may not be the only factor. In reality, the presence of ionic compounds in the concrete can also play a role. Specific ionic components of the surface chemistry of the slab (the top 0 - 3/16"(5mm)), when present at certain levels, can cause a failure to occur.

Concrete defects resulting from alkaline-silicate reaction (ASR) or alkaline-aggregate reaction (AAR) within the slab may also contribute to floor failure.

How do I test my floor?
Dur-A-Flex has developed a chart to assist you with identifying the moisture limits for each type or Dur-A-Flex resin/flooring system. If you are planning to use our Epoxy or MMA, Dur-A-Flex recommends using in-situ Relative Humidity Testing per ASTM F-2170 as a quantitative test method. Although traditional calcium chloride testing may be used, RH differs in that it is not significantly impacted by ambient temperature and relative humidity conditions in the building and thus likely to provide more accurate readings. The use of calcium chloride testing on lightweight concrete on elevated decks is not recommended.

In cases where a product can tolerate high levels of moisture such as Poly-Crete, Hybri-Flex or Dur-A-Glaze MVP, Dur-A-Flex may recommend that cores be taken and analyzed to determine the levels of ionic components (salts) in the slab. Dur-A-Flex offers in-house core testing using ion-chromatography technology. Refer to the Dur-A-Flex Core Analysis Program on our website for more information.

Dur-A-Flex Floor Evaluation Guidelines

Resin system	EPOXY	MMA	URETHANE		HYBRIDS	MITIGATION
Product Group	Dur-A-XXX, Shop Floor	Cryl-A-Flex	ACCELERA™	Poly-Crete®	Hybri-Flex®	Dur-A-Glaze MVP Primer
Calcium Chloride (CaCl) - lbs. maximum per 1,000 SF per 24 Hrs. (per ASTM F1869)	3	5 (with bond test)	3	20*	20*	20*
Relative Humidity (RH) - % maximum (per ASTM F2170)	75%	85% (with bond test)	75%	99%*	99%*	99%*

	* POLY-CRETE, HYBRI-FLEX and DUR-A-GLAZE MVP
Old Concrete (>1 yr. old)	Core analysis testing is recommended to rule out the potential for osmotic blistering caused by higher than normal levels (see below) of soluble ion (salt) deposits at or near the surface. Refer to the Dur-A-Flex Core Analysis Program.
New Concrete (<1 yr. old)	Core testing is not required if NO concrete curing compounds, hardeners, or densifiers were used. The use of any of these products may cause soluble ion (salts) deposits at or near the surface to exceed normal levels (see below), potentially producing conditions for osmotic blistering. In these cases Dur-A-Flex recommends a core analysis to determine if these levels are suitable for an installation. Refer to the Dur-A-Flex Core Analysis Program.

Soluble Ion Normal Levels (parts per million):

Sodium (Na)	~200-800 ppm
Potassium (K)	~200-800 ppm
Chloride (Cl)	~10-100 ppm
Sulfate (SO4)	~1500-5500 ppm

Typical Product Limits** (combined Na, K, Cl):

Epoxy, MVP, MMA , ACCELERA	1600 ppm
Poly-Crete SLB, MD, HF(w/topcoats), Hybri-Flex E, M or A	3200 ppm
Poly-Crete MD, HF (no topcoats)	4800 ppm

** These limits are to be used as a guide only. Please contact your local Dur-A-Flex Sales Representative or the Dur-A-Flex Technical Departments for a thorough analysis of your results.

In all cases, Dur-A-Flex, Inc. products must be applied as per Dur-A-Flex Application Instructions on structurally sound and clean areas in which the concrete meets acceptable industry standards as defined in ACI Committee 201 Report, "Guide to Durable Concrete." Dur-A-Flex shall not be liable for bond failures caused by deficiencies in the substrate including, but not limited to, the presence of ionic compounds or soluble salts, alkali silicate reaction, alkali aggregate reaction, shale-pop, and other expansive reactions of aggregates and reinforcements. Dur-A-Flex recommends all concrete be tested for quality by a licensed petrographer.

DUR-A-FLEX

Dur-A-Flex Chemical Resistance Data

This data is based on the application of listed materials to the top surface of the flooring

		Epoxies				Urethanes							Acrylics
Chemical Name	% Conc	Dur-A-Gard	Glaze #4	Novolac	Ultra Clear	Armor Top	ACCELERA	Glaze #5	Poly-Thane 1	Poly-Thane 2 HS	Poly-Crete HF MD TF	Poly-Crete Color Fast	MMA
Acetic Acid	10%	R	R	R	R	R	R	R	R	R	R	R	R
Acetic Acid	30%	S	S	R	R	RS	RS	S	R	S	R	RS	S
Acetic Acid	50%	N	N	R	N	RS	RS	S	R	S	S	RS	
Acetic Acid,3%, and Propionic Acid		R	R	R	R	R	R		R	R	R	R	R
Acetone		N	N	N	N	R	R	S	R	R	R	R	N
ACP-99 Ketone		N	N	S	N				R	R			N
Alum	48%	N	N	R	N				S	S	S		R
Aminoethanolamine		RS	RS	RS	RS				RS	RS	R		RS
Ammonia	30%	R	R	R	R	R	R	R	R	R	R	R	R
Ammonium Hydroxide	30%	R	R	R	R	R	R	R	R	R	R	R	S
Antifreeze		R	R	R	R	R	R	R	R	R	R	R	R
Aromatic 100		S	S	R	S				R	R	S		
Aromatic hydrocarbons-Super Hiflash 100		S	S	R	S				R	R	S		
Benzene		N	N	S	N				R	R	N		N
Benzyl Alcohol	Photo	S	S	R	S	R	N	S	R	R	S	S	N
Betadine		RS	SS	RS	SS	RS	R	SS	RS	RS	RS	RS	RS
Boric Acid	4%	R	R	R	R			R	R	R	R		R
Brake Fluid, DOT 3		S	S	S	S	R	RS		R	R	S	N	R
Butanol/Methyl Cellosolve		N	N	S	N				R	R	N		N
Butyl Alcohol		S	S	R	S				R		S		N
Butyl Carbitol		S	S	R	S				R	R			N
Butyl Cellosolve		N	N	S	N				R	R			N
Butyl Cellosolve acetate		N	N	S	N				R	R			N
Carbon Tetrachloride		R	R	R	R				R				N
Caustic Soda solution		R	R	R	R	R	R	N	R	R	R	R	R
Chromic Acid	10%	RS	RS	RS	SS	RS	RS	SS	RS	RS	RS	RS	RS
Chromic Acid	40%	N	N	RS	N			SS	SS	SS	SS		SS
CIP 200 Cleaner	100%	SS	SS	SS	SS	S	SS	SS	R	SS	SS	SS	SS
CIP 300 Cleaner	100%	R	R	R	R	R	R	R	R	R	R	R	R
Citric Acid	10%	R	R	R	R	R		R	R	R	R	R	R
Citric Acid	20%	R	R	R	R	R		R	R	R	R	R	R
Citric Acid	50%	N	N	R	N	R		S	R	R	R	R	R
Clorox	10%	R	R	R	R	R	R	S	R	R	R	R	R
Coffee		RS	RS	R	RS	R	R	RS	R	R	R	R	R
Cola	90C	N	N	SS	N	RS	RS	RS	RS	RS	RS	RS	RS
Cola	RT	S	S	R	S	R	R	R	R	R	R	R	R
Copper Sulfate		RS	RS	RS	RS				RS	RS	RS		RS
Cupric Chloride		RS	RS	RS	RS				RS	RS	RS		RS
Cyclohexanone		S	S	R	S				R	R	S		R
Detergent, heavy duty		R	R	R	R	R			R	R	R	R	R
Diacetone alcohol		N	N	S					R	R			N
Dimethyl ethanol amine		RS	RS	RS	RS				RS	RS			
Dimethylamineborane		RS	RS	RS	RS				RS	RS			
DMF		N	N	N	N	R	R	RS	R	R	N	RS	RS
Docosanic Acid (in ethanol)	2.50%	N	N	R	N				R	R	N		
Drano- (sodium hydroxide & aluminum)		S	S	R	S	R			R	R	R	R	
DuraPrep		N	SS	N	SS	SS	SS	SS	RS	SS	RS	RS	SS
Eco-lab AC-3 Cleaner		N	N	R	N	SS	RS	N	R	SS	SS	N	RS
Eco-Lab Wash & Walk		R		R		R					R	R	
Eco-Lab Neutral Disinfectant Cleaner (NDC)	100%	R	SS	SS	SS	R	R	R	R	R	SS	SS	R
Eco-Lab Neutral Disinfectant Cleaner (NDC)	0.5oz/Gal water	R	SS	R	SS	R	R	R	R	R	SS	SS	R
EEP solvent		N	N	S	N	R			R	R	N	S	N
Enforce LP (6000 ppm)		R	RS	R	R	S	R	R		R	S	S	R
Ethanol	95%	N	N	S	N	R	R	S	R	R	S		S
Ethyl Acetate	99%	N	N	S	N				R	R	S	S	S
Excellerate Cleaner		R	RS	R	R	R	R	R	R	R	R	R	R
Fluoboric Acid		S	S	R	S				R	R			
Formaldehyde	37%	SS	SS	RS	SS	RS	RS	RS	RS	RS	RS	RS	RS
Gasoline		R	R	R	R	R	R	R	R	R	R	R	R
Glycol Ether		N	N	S	N				R	R		R	R
Heating Oil-Home		R	R	R	R	R		R	R	R	R	R	R
Heptanoic Acid	96%			S		RS		N				N	
Hexane		N	N	S	N	R	R	R	R	R	R	R	R
Hydraulic fluids		R	R	R	R	R	R	R	R	R	R	R	R
Hydrochloric Acid	5%	RS	RS	R	RS	R	R	SS	R	R	R	R	R
Hydrochloric Acid	20%	RS	RS	RS	RS	RS	R	N	RS	RS	RS	RS	RS
Hydrochloric Acid	37%	N	N	RS	N	RS	RS	N	SS	SS	RS	SS	RS
Hydrofluoric Acid	10%	N	N	RS	N	N		N	SS	SS	SS	SS	SS
Hydrofluoric Acid	40%	N	N	N	N	N		N	N	N	N	N	N
Hydrofluosilic Acid	30%	R	R	R	R	RS		RS	R	R	R	R	R
Hydrogen Peroxide	25%	S	S	R	S	RS	RS	S	R	R	R	R	R
Hydrogen Peroxide	50%	N	N	R	S	RS	RS	N	R	R	R	N	R
Hydrogen Peroxide (VHP)	560ppm			R		RS	R	RS	RS	R			R
Iodine Tincture	2%	RS	RS	RS	RS	RS	RS	RS	RS	RS	RS	RS	RS
Isopropanol		S	S	R	S	R	R	R	R	R	S	R	S
Isopropyl Acetate	99%	S	S	R	S				R	R	S		N
Jet Fuel		R	R	R	R	R	R	R	R	R	R	R	R
Lactic Acid	10%	N	N	R	N	R	RS	S	R	N	R	R	R
Lactic Acid	30%	N	N	R	N	S	SS	N	R	N	R	R	R
Lactic Acid	88%	N	N	R	N	N	N	N	S	N	R	S	R
Magnesium Hydroxide		R	R	R	R				R	R	R		R

Key: R = Resistant/Recommended N = Not recommended for exposure to material due to coating degradation RS = Resistant - will not degrade coating but will stain

S = Splashes and spills must be cleaned from surface within 24 hours to avoid coating degradation and staining

SS = Splashes and spills must be cleaned from surface within 24 hours to avoid coating degradation but it will leave stain

DUR-A-FLEX

Dur-A-Flex Chemical Resistance Data

The data is based on the application of listed materials to the top surface of the flooring

		Epoxies				Urethanes							Acrylics
Chemical Name	% Conc.	Dur-A-Gard	Glaze #4	Novolac	Ultra Clear	Armor Top	ACCELERA	Glaze #5	Poly-Thane 1	Poly-Thane 2 HS	Poly-Crete HF MD TF	Poly-Crete Color Fast	MMA
MEK		N	N	N	N	R	R	S	S	S	N	S	N
Methacrylate Monomer		S	S	S	S	R	R	N	S	S	N	N	N
Methanol		N	N	N	N	R	R	S	R	R	N	S	N
Methyl Cellosolve		N	N	N	N				R	R		S	N
Methyl dipropasol solvent		N	N	R	N				R	R		S	N
Methylene chloride		N	N	N	N				S	N	N	S	N
MIBK		N	N	S	N	R	R	SS	R	R	N	N	N
Mineral Oil		R	R	R	R	R	R	R	R	R	R	R	R
Mineral Spirits		S	S	R	S	R	R	R	R	R	R	R	R
Monoethanolamine		RS	RS	RS	RS				RS	RS			
Motor Oil		R	R	R	R	R	R	R	R	R	R	R	R
Mustard, yellow		RS	RS	RS	N	RS	R	R	RS	RS	RS	RS	R
Nickel chloride		RS	RS	RS	RS	RS	RS	RS	RS	RS	RS	RS	RS
Nickel Sulfate		RS	RS	RS	RS	RS	RS	RS	RS	RS	RS	RS	RS
Nitric Acid	10%	SS	SS	R	SS	RS	RS	N	RS	SS	RS	RS	RS
Nitric Acid	20%	SS	SS	R	SS	SS	N	N	RS	RS	RS	RS	RS
Nitric Acid	30%	N	N	R	N	N	N	N	RS	RS	RS	RS	SS
Nitric Acid	40%	N	N	R	N	N	N	N	SS	N	SS	RS	N
Nitric Acid	70%	N	N	S	N	N	N	N	N	N	N	N	N
Nitric Acid	98%	N	N	N	N	N	N	N	N	N	N	N	N
Oleic Acid		R	R	R	R	R	R	R	R	R	R	R	R
Oxalic Acid	10%	R	R	R	R	R	R	R	R	R	R	R	R
Peppermint Oil	100%	R	R	R	R	RS	R	R	R	R	R	R	
Phenolic Paint stripper waste	1-5%	S	S	R	S			R	R	R			N
Phosphoric Acid	7%	N	N	R	N	R	R	S	R	RS	R	R	R
Phosphoric Acid	25%	N	N	R	N	R	R	N	RS	RS	R	R	R
Phosphoric Acid	85%	N	N	R	N	N	N	N	N	N	N	N	SS
Phosphorous Trichloride	100%	N	N	S	N				R	R			N
PM Solvent		N	N	S	N	R	R	S	R	R	RS	S	N
Polyester Resin		S	S	R	S				R	R			S
Polyester resin in styrene		S	S	R	S				R	R			N
Polyphosphates		R	R	R	R				R	R	R		R
Potassium Cyanide		RS	RS	RS	RS				RS	RS			RS
Potassium Hydroxide	45%	R	R	R	R	R	R	SS	R	R	R	R	R
Potassium Permanganate	solid	RS	RS	RS	RS			SS	RS	RS	RS		RS
Propionic Acid	100%	S	S	R	S				R	R			N
Propyl Cellosolve		N	N	S	N			N	R	R	N		
Propylene Glycol		R	R	R	R	R	R	R	R	R	R	R	R
Propylene glycol ether		N	N	R	N	R	R	S	R	R	S	S	R
Red Wine Vinegar		R	RS	RS	SS	R	R	R	R	R	R	S	R
Silver Cyanide		RS	RS	RS	RS				RS	RS			
Silver Nitrate	20%	RS	RS	RS	RS				RS	RS	RS		
Skydrol		S	S	R	S	R	SS	S	R	R		R	R
Sodium Chlorite		R	R	R	R	R	R	R	R	R	R	R	R
Sodium Hydroxide	50%	R	R	R	R	R	R	N	R	R	R	R	R
Sodium Hypochlorite	5%	R	R	R	R	RS	R	R	R	R	R	R	R
Sodium Hypochlorite	15%	R	R	R	R	RS	R	R	R	R	R	R	R
Sodium Hypochlorite	50%	N	N	R	N	RS			R	R	R	R	R
Sodium Persulfate		RS	RS	RS	RS				RS	RS	RS		RS
Spartan, Inspector's Choice, 6ozs/gal	5%	R	RS	R	RS	R	R	R	R	R	R	R	R
Spartan, Sparclean Sure Step, 2ozs/gal	1.50%	R	R	R	R	R	R	R	R	R	RS	R	R
Spearmint Oil		SS	S	R	S	RS	RS	N	R	R	RS	N	N
Spor-Klenz	0.30%	R	RS	R	RS	RS	R	RS	R	R	R	R	R
Spor-Klenz	100.00%	SS	SS		SS	S	R	R	S	R	SS	SS	SS
Stoddard solvent		N	N	S	N				R	R	N		N
Styrene		N	N	S	N				R	R	N		N
Sulfonic Acid	70%	N	N	SS	N	SS		N				N	
Sulfuric Acid	10%	RS	RS	RS	RS	RS	RS	RS	RS	SS	RS	RS	RS
Sulfuric Acid	30%	N	N	RS	N	SS	RS	N		SS	RS	N	RS
Sulfuric Acid	50%	N	N	RS	N	N		N	SS	SS	RS	N	SS
Sulfuric Acid	75- 98%	N	N	SS	N	N	RS	N	N	N	N	N	N
Tannic Acid	20%	RS	RS	RS	RS				RS	RS	RS		
Tartaric Acid	10%	R	R	R	R	R	R	R	R	R	R	R	R
Terpene Fraction of Spearmint Oil	100%	R	R	R	R	R	R	R	R	R	R	R	R
Toluol		N	N	N	N				R	R		S	
Transmission Oil		R	R	R	S	R	R	R	R	R	R	R	R
Trichloroethane (1,1,1)		S	S	R	S				R	R			
Trichloroethylene		N	N	N	N	R		N	R	R	N	S	
Triethanolamine (TEA)		SS	SS	RS	SS				R	SS	R		
Triethanolpentamine (TEPA)		SS	SS	RS	SS				R	SS			
Triethanoltetramine (TETA)		SS	SS	RS	SS				R	SS			
Urine		R	R	R	R	R		R	R	R	R	R	R
Vesphene II ST	2 ozs/ 2Gal Water	R	SS		SS	R	R	R	R	R	SS	SS	SS
Vinegar		R	R	R	R	R	R	R	R	R	R	R	R
Vortexx (2600 ppm)		RS	RS	N	RS	S	R	R	R	R	S	S	R
Water		R	R	R	R	R	R	R	R	R	R	R	R
Wine, cabernet sauvignon		R	RS	R	SS	RS	R	R	R	R	R	RS	R
Xylene		S	S	R	S	R	R	S	R	R	S	S	N

Key: R = Resistant//Recommended N = Not recommended for exposure to material due to coating degradation RS = Resistant - will not degrade coating but will stain
S = Splashes and spills must be cleaned from surface within 24 hours to avoid coating degradation and staining
SS = Splashes and spills must be cleaned from surface within 24 hours to avoid coating degradation but it will leave stain

All data is based on room temperature exposure. Please check with the Dur-A-Flex Technical Department for elevated constant temperature or thermal shock exposure

Methodology - Epoxies and Acrylics (MMA) were tested by immersion for Shore D Hardness and weight change at 0, 2, and 7 days
- Urethanes were spot tested and checked after 1, 2, and 7 days

013015

Exposure guidelines:

Portland Cement	5 mg/m^3 TWA OSHA PEL 10 mg/m^3 TWA ACGIH TLV
Crystalline Silica	10 mg/m^3 TWA OSHA PEL (respirable fraction) % Silica + 2 0.025 mg/m3 TWA ACGIH TLV (respirable fraction)
Calcium Sulfate	5 mg/m^3 TWA OSHA PEL (respirable fraction) 10 mg/m^3 TWA OSHA PEL (total dust) 10 mg/m^3 TWA ACGIH TLV (inhalable fraction)
Iron Oxide	10 mg/m^3 TWA OSHA PEL (fume) 5 mg/m^3 TWA ACGIH TLV (respirable fraction)
Calcium Carbonate	5 mg/m^3 TWA OSHA PEL (respirable fraction) 10 mg/m^3 TWA OSHA PEL (total dust)
Magnesium Oxide	15 mg/m^3 TWA OSHA PEL (fume total particulate) 10 mg/m^3 TWA ACGIH TLV (inhalable fraction)
Calcium Oxide	5 mg/m^3 TWA OSHA PEL 2 mg/m^3 TWA ACGIH TLV
Calcium Hydroxide	5 mg/m^3 TWA OSHA PEL (respirable fraction) 10 mg/m^3 TWA OSHA PEL (total dust) 5 mg/m^3 TWA ACGIH TLV

Appropriate engineering controls: Use with adequate general or local exhaust ventilation to maintain exposures below the occupational exposure limits.

Individual protection measures, such as personal protective equipment:
Respiratory protection: If the exposure limits are exceeded a NIOSH approved particulate respirator appropriate for the form and concentration of the contaminants should be used. Selection and use of respiratory equipment must be in accordance with OSHA 1910.134 or other applicable regulations and good industrial hygiene practice.
Skin protection: Alkali/abrasive resistant gloves are recommended to prevent skin contact.
Eye protection: Chemical safety goggles are recommended to prevent eye contact.
Other: Impervious clothing as needed to avoid skin contact and contamination of personal clothing. A safety shower and eye wash should be available in the immediate work area. If clothing becomes contaminated with dust or wet cement, remove immediately and launder before reuse.

9. PHYSICAL AND CHEMICAL PROPERTIES

Appearance (physical state, color, etc.): Tan granular solid
Odor: No odor

Odor threshold: Not applicable	**pH:** Not available
Melting Point/Freezing Point: - Not available	**Boiling Point:** 4000°F / 2204°C
Flash point: Not flammable	**Evaporation rate:** Not applicable
Flammability (solid, gas): Not flammable or combustible	

Flammable limits: LEL: Not applicable	**UEL:** Not applicable
Vapor pressure: Not applicable	**Vapor density:** Not applicable
Relative density: >1	**Solubility(is):** Insoluble
Partition coefficient: n-Octanol/water: Not applicable	**Auto-ignition temperature:** Not applicable
Decomposition temperature: Not available	**Viscosity:** Not applicable

10. STABILITY AND REACTIVITY

Reactivity: Not reactive under normal conditions of use.
Chemical stability: Stable.
Possibility of hazardous reactions: Crystalline silica will dissolve in hydrofluoric acid and produce silicone tetrafluoride.
Conditions to avoid: Unintentional contact with water will result in hydration and produce caustic calcium hydroxide.
Incompatible materials: Avoid contact with hydrofluoric acid and oxidizing agents.
Hazardous decomposition products: None known.

11. TOXICOLOGICAL INFORMATION

Inhalation: Inhalation of dust may cause irritation to the nose, throat and upper respiratory tract with coughing and shortness of breath.
Ingestion: Large amounts may cause gastrointestinal irritation or burns with nausea and diarrhea.
Skin contact: Contact with dry powder may cause drying of the skin and mild irritation. May cause mechanical irritation. Contact with wet cement may cause irritation with thickening, cracking and fissuring of the skin. Prolonged contact may cause skin burns. May cause allergic skin reaction.
Eye contact: Dust may cause irritation or redness with inflammation of the cornea. May cause mechanical irritation. Direct contact with wet cement or large amounts of dry powder may cause irritation or burns with possible blindness.

Chronic effects from short- and long-term exposure: Chronic inhalation of respirable crystalline silica dust may cause a progressive, disabling and sometimes fatal lung disease called silicosis. Symptoms include cough, shortness of breath, wheezing, non-specific chest illness and reduced pulmonary function.

Reproductive Toxicity: None of the components greater than 0.1% have been shown to cause reproductive or developmental toxicity.

Sensitization: Portland cement may contain trace amounts of chromium salts or nickel compounds that have been shown to cause sensitization in humans.

Mutagenicity: None of the components greater than 0.1% have been shown to cause germ cell mutagenicity.

Carcinogenicity: Crystalline silica quartz is listed as "Carcinogenic to Humans" (Group 1) by IARC and "Known to be a Human Carcinogen" by NTP. None of the other components are listed as a carcinogen by IARC, NTP, ACGIH or OSHA.

Acute Toxicity Values:
Portland Cement: No toxicity data available
Crystalline Silica, Quartz: Oral rat LD50 >22,500 mg/kg
Calcium Sulfate: Oral rat LD50 >1581 mg/kg; Inhalation rat LC50 > 2.61 mg/L/4 hr
Iron Oxide: Oral rat LD50 > 10000 mg/kg;
Calcium Carbonate: No toxicity data available
Magnesium Oxide: No toxicity data available
Calcium Oxide: Oral rat LD50 > 2000 mg/kg
Calcium Hydroxide: Oral rat LD50 > 2000 mg/kg; Dermal rabbit LD50 > 2500 mg/kg

12. ECOLOGICAL INFORMATION

Ecotoxicity:
Portland Cement: No toxicity data available
Iron Oxide: 96 hr LC50 Brachydanio rerio 100000 mg/L: 48 hr EC50 daphnia magna >100 mg/L
Calcium Carbonate: No data available
Magnesium Oxide: No data available
Calcium Oxide: 96 hr LC50 Oncorhynchus mykiss 50.6 mg/L; 48 hr EC50 daphnia magna 49.1 mg/L; 72 hr EC50 Pseudokirchnerella subcapitata 184.57 mg/L
Crystalline Silica: 72 hr LC50 carp >10,000 mg/L
Calcium Hydroxide: 96 hr LC50 Gasterosteus aculeatus 457 mg/L; 48 hr EC50 daphnia magna 49.1 mg/L; 72 hr EC50 Pseudokirchnerella subcapitata 184.57 mg/L

Persistence and degradability: Biodegradation is not applicable to inorganic substances.
Bioaccumulative potential: Not expected to be bioaccumulative.
Mobility in soil: No data available.
Other adverse effects: None known.

13. DISPOSAL CONSIDERATIONS

Dispose in accordance with all local, state and federal regulations.

14. TRANSPORT INFORMATION

	UN Number	Proper shipping name	Hazard Class	Packing Group	Environmental Hazard
DOT	None	Not Regulated	None	None	None
TDG	None	Not Regulated	None	None	None
IMDG	None	Not Regulated	None	None	None
IATA	None	Not Regulated	None	None	None

Transport in bulk (according to Annex II of MARPOL 73/78 and the IBC Code): Not applicable – product is transported only in packaged form.

Special precautions: None known

15. REGULATORY INFORMATION

CERCLA: This product is not subject to CERCLA reporting requirements as it is sold. Many states have more stringent release reporting requirements. Report spills required under federal, state and local regulations.

SARA Hazard Category (311/312): Acute Health, Chronic Health

SARA 313 Information: This product contains the following chemicals subject to Annual Release Reporting Requirements Under SARA Title III, Section 313 (40 CFR 372): None

California Proposition 65
This product contains the following chemicals known to the State of California to cause cancer or reproductive toxicity (birth defects): Crystalline silica, quartz (14808-60-7) 0-95% cancer, Titanium dioxide (13463-67-7) <0.08% (cancer)

EPA TSCA Inventory: All of the ingredients in this product are listed on the EPA TSCA Inventory.

CANADA:
Canadian WHMIS Classification: Class D Division 2A, Class D Division 2B
This product has been classified under the CPR and this MSDS discloses information elements required by the CPR.

16. OTHER INFORMATION

NFPA Rating:	Health = 3	Flammability = 0	Instability = 0
HMIS Rating:	Health = 3*	Flammability = 0	Physical Hazard = 0

SDS Revision History: All sections revised – Converted to GHS forma
Date of preparation: January 13, 2014
Date of last revision: New SDS

The above information is accurate to the best of our knowledge. However, since data, safety standards, and government regulations are subject to change and the conditions of handling and use, or misuse, are beyond our control, Dur-A-Flex, Inc. MAKES NO WARRANTY, EITHER EXPRESS OR IMPLIED, WITH RESPECT TO THE COMPLETENESS OR CONTINUING ACCURACY OF THE INFORMATION CONTAINED HEREIN AND USE.

DUR-A-FLEX
INNOVATION FROM THE FLOOR UP

Vinyl Chips
SAFETY DATA SHEET

1. IDENTIFICATION

Product Identifier: Vinyl Chips

Recommended use: Floor Surfacing

Manufacturer Name: Dur-A-Flex, Inc.
95 Goodwin Street
East Hartford, CT 06108
Telephone number: 860-528-9838

Emergency phone number: 1-800- 424-9300 (CHEMTREC)

Date of Preparation: October 22, 2014

2. HAZARD(S) IDENTIFICATION

Classification:

Physical	Health
Not Hazardous	Not Hazardous

Labeling: None Required

3. COMPOSITION / INFORMATION ON INGREDIENTS

Chemical name	CAS No.	Concentration
Barium Sulfate	7727-43-7	70-85%
Resin	Proprietary	10-15%
Titanium Dioxide*	13463-67-7	0-10%
Pigments	Proprietary	<3%

* The titanium dioxide in this product is inextricably bound in a manner that no exposure occurs during normal use and handling. Therefore this product is not classified as a carcinogen.

The specific identity and/or exact percentage (concentration) of composition has been withheld as a trade secret.

4. FIRST-AID MEASURES

Inhalation: Remove victim to fresh air. Seek medical attention if irritation or other symptoms develop.
Skin contact: Remove contaminated clothing. Wash with soap and water. If irritation develops, get medical attention.
Eye contact: Flush eyes thoroughly with large amounts of water, holding eyelids open. If irritation occurs and persists, seek medical attention.

Ingestion: If conscious, rinse mouth with water. Never give anything by mouth to an unconscious or convulsing person. Get medical attention.

Most important symptoms/effects, acute and delayed: Dust may cause eye and respiratory irritation. May cause mechanical skin irritation.

Indication of immediate medical attention and special treatment, if necessary: None required under normal conditions of use.

5. FIRE-FIGHTING MEASURES

Suitable (and unsuitable) extinguishing media: Use media appropriate for the surrounding fire.

Specific hazards arising from the chemical: Combustion may produce carbon oxides.

Special protective equipment and precautions for fire-fighters: Firefighters should wear positive pressure self-contained breathing apparatus and full protective clothing. Cool fire exposed containers with water.

6. ACCIDENTAL RELEASE MEASURES

Personal precautions, protective equipment, and emergency procedures: Wear appropriate protective clothing as described in Section 8. Avoid breathing dust.

Environmental precautions: Avoid release to the environment. Report releases as required by local, state and federal authorities.

Methods and materials for containment and cleaning up: Scoop or sweep up and place into a container for disposal. Avoid generating dust.

7. HANDLING AND STORAGE

Precautions for safe handling: Avoid contact with eyes, skin and clothing. Avoid breathing dust. Wash thoroughly after handling. Use with adequate ventilation.

Conditions for safe storage, including any incompatibilities: No special storage required.

8. EXPOSURE CONTROLS / PERSONAL PROTECTION

Exposure guidelines:

Barium Sulfate	5 mg/m3 TWA OSHA PEL (respirable), 10 mg/m3 TWA (total dust) 5 mg/m3 TWA ACGIH TLV (inhalable dust)
Resin	None Established
Titanium Dioxide	10 mg/m3 TWA OSHA PEL (total dust) 5 mg/m3 TWA ACGIH TLV (inhalable dust)
Pigments	None Established

Appropriate engineering controls: Use with adequate general or local exhaust ventilation to maintain exposure levels below the occupational exposure limits.

Personal Protective Equipment:
Respiratory protection: If the exposures are excessive, a NIOSH approved respirator with a dust/mist filter or supplied air respirator is recommended. Selection and use of respiratory equipment must be in accordance with OSHA 1910.134 and good industrial hygiene practice.
Skin protection: Abrasive resistant gloves are recommended to prevent skin contact
Eye protection: Chemical safety glasses with sideshields are recommended to avoid eye contact. .
Other: None known.

9. PHYSICAL AND CHEMICAL PROPERTIES

Appearance (physical state, color, etc.): White or colored flakes.
Odor: No odor

Odor threshold: Not available	**pH:** Not applicable
Melting Point/Freezing Point: Not available	**Boiling Point:** Not applicable
Flash point: Not applicable	**Evaporation rate:** Not applicable
Flammability (solid, gas): Not flammable	
Flammable limits: LEL: Not applicable	**UEL:** Not applicable
Vapor pressure: Not applicable	**Vapor density:** Not applicable
Relative density: 3.6	**Solubility(is):** Insoluble
Partition coefficient: n-Octanol/water: Not applicable	**Auto-ignition temperature:** Not applicable
Decomposition temperature: Not available	**Viscosity:** Not applicable

10. STABILITY AND REACTIVITY

Reactivity: None known.
Chemical stability: Stable.
Possibility of hazardous reactions: Not expected to be reactive.
Conditions to avoid: None known.
Incompatible materials: None known.
Hazardous decomposition products: Thermal decomposition may produce carbon oxides.

11. TOXICOLOGICAL INFORMATION

Inhalation: Excessive inhalation of dust may cause upper respiratory tract irritation, coughing and difficulty in breathing.
Ingestion: Swallowing may cause gastrointestinal irritation and nausea.
Skin contact: May cause mechanical skin irritation.
Eye contact: May cause mechanical irritation with redness and tearing.

Chronic effects from short- and long-term exposure: Prolonged inhalation of respirable dust may cause adverse lung effects.

Reproductive Toxicity: This product is not expected to cause adverse reproductive or developmental effects.

Sensitization: This product has not been shown to cause sensitization in animals or humans.

Mutagenicity: This product is not expected to cause mutagenic activity.

Carcinogenicity: Titanium dioxide is listed by IARC as "Possibly Carcinogenic to Humans", Group 2B. The titanium dioxide in this product is inextricably bound in a manner that no exposure occurs during normal use and handling. None of the other components are listed as a carcinogen by IARC, NTP, ACGIH or OSHA.

Acute Toxicity Values:
Barium Sulfate: Oral rat LD50 307 g/kg, Dermal rat LD50 >2000 mg/kg
Resin: No toxicity data available
Titanium Dioxide: Oral rat LD50 >5000 mg/kg, Inhalation rat LC50 >6.82 mg/L/4 hr
Pigments: No toxicity data available

12. ECOLOGICAL INFORMATION

Ecotoxicity:
Barium Sulfate: 96 he LC50 Danio rerio >3.5 mg/L, 48 hr EC50 daphnia magna 14500 ug/L, 72 he EC50 Pseudokirchnerella subcapitata > 1.15 mg/L
Resin: No data available
Titanium Dioxide: 72 hr EC50 61 mg/L
Pigments: No data available

Persistence and degradability: Biodegradation is not applicable to inorganic substances such as barium sulfate and titanium dioxide.
Bioaccumulative potential: No data available.
Mobility in soil: No data available.
Other adverse effects: None known.

13. DISPOSAL CONSIDERATIONS

Dispose in accordance with all local, state and federal regulations.

14. TRANSPORT INFORMATION

	UN Number	Proper shipping name	Hazard Class	Packing Group	Environmental Hazard
DOT	None	Not Regulated	None	None	None
TDG	None	Not Regulated	None	None	None
IMDG	None	Not Regulated	None	None	None
IATA	None	Not Regulated	None	None	None

Transport in bulk (according to Annex II of MARPOL 73/78 and the IBC Code): Not applicable – product is transported only in packaged form.

Special precautions: None known

15. REGULATORY INFORMATION

CERCLA: This product is not subject to CERCLA reporting requirements as it is sold. Many states have more stringent release reporting requirements. Report spills required under federal, state and local regulations.

SARA Hazard Category (311/312): Not hazardous

SARA 313 Information: This product contains the following chemicals subject to Annual Release Reporting Requirements Under SARA Title III, Section 313 (40 CFR 372): None

California Proposition 65
This product contains the following chemicals known to the State of California to cause cancer or reproductive toxicity (birth defects):

Titanium Dioxide*	13463-67-7	0-10%	Cancer

* The titanium dioxide in this product is inextricably bound in a manner that no exposure occurs during normal use and handling. Therefore this product is not regulated under California Proposition 65

EPA TSCA Inventory: All of the ingredients in this product are listed on the EPA TSCA Inventory.

CANADA:
Canadian WHMIS Classification: Not a controlled product
This product has been classified under the CPR and this SDS discloses information elements required by the CPR.

16. OTHER INFORMATION

NFPA Rating: Health = 1 Flammability = 1 Instability = 0
HMIS Rating: Health = 1 Flammability = 1 Physical Hazard = 0

SDS Revision History: Converted to GHS format. All sections revised.
Date of preparation: October 22, 2014
Date of last revision: New SDS

The above information is accurate to the best of our knowledge. However, since data, safety standards, and government regulations are subject to change and the conditions of handling and use, or misuse, are beyond our control, Dur-A-Flex, Inc. MAKES NO WARRANTY, EITHER EXPRESS OR IMPLIED, WITH RESPECT TO THE COMPLETENESS OR CONTINUING ACCURACY OF THE INFORMATION CONTAINED HEREIN AND USE.

DUR-A-FLEX
INNOVATION FROM THE FLOOR UP

CLEANING GUIDELINES

WHY CLEAN YOUR FLOOR?

Appearance: Your floor will look its best when it is clean. By instituting a scheduled cleaning program, the floor will continue to look and perform as it did when it was first installed.

Safety: No matter how aggressive the texture of your floor, if it is not cleaned properly, it can present a slip hazard. Emulsifying, rinsing and drying your floor properly will reduce the risk of a slip and fall incident.

Service Life: The lifetime of your floor will depend upon how well you clean it. In aggressive use areas (i.e. kitchens and machine shops) contaminants such as oil, dirt and grease work with water and bacteria to attack your floor.

FLOOR CLEANING PROCESS & TOOLS

The best way to clean a Dur-A-Flex floor is to use the recommended cleaning product and follow a six-step process. (Equipment needs vary between small and medium/large floor areas.)

Process	Small Area	Medium/Large Area
Sweep floor thoroughly	Broom, dust mop	Floor sweeper, broom
Apply cleaning product on floor surface	Deck brush, Foamer/sprayer	Automatic floor scrubber, Foamer/sprayer
Dwell – allow cleaning product time to emulsify foreign material	10 –15 minutes	10 –15 minutes
Agitate to aid in the release of foreign materials	Deck brush, Rotary floor machine	Automatic floor scrubber, Rotary floor machine
Remove cleaning product from the floor	Squeegee (soft neoprene) Wet vacuum	Automatic floor scrubber
Rinse the floor with clean water and remove	Wet vacuum, Squeegee (soft neoprene)	Automatic floor scrubber

Dur-A-Flex, Inc. | 95 Goodwin Street, East Hartford, CT 06108 | 3969 East Guasti Road, Suite B, Ontario, CA 91761 | Toll Free: 800.253.3539 | Tel: 860.528.9838 | www.Dur-A-Flex.com

Warranties: Seller warrants that its goods, as described on the face hereof, are free from any defects in material or workmanship. **SELLER MAKES NO OTHER WARRANTY, EXPRESS OR IMPLIED, AND ALL IMPLIED WARRANTIES OF MERCHANTABILITY AND FITNESS FOR A PARTICULAR PURPOSE ARE HEREBY DISCLAIMED. SELLER SHALL NOT BE LIABLE FOR PROSPECTIVE PROFITS OR SPECIAL INDIRECT OR CONSEQUENTIAL DAMAGES.** Seller's sole liability and buyer's exclusive remedy for breach of any warranty as expressly limited, at seller's option, to replacement at the original F.O.B. point or refund of purchase price, but in no event will Seller's liability exceed the total purchase price of the defective product. Seller shall not be responsible for any claim resulting from failure to utilize product in the manner in which it was intended and in accordance with instruction provided for use of product. Any claim for breach of warranty shall be deemed waived unless buyer shall give seller written notice of such claim within sixty (60) days after delivery and shall allow seller reasonable opportunity to investigate claim and inspect product.

NOTES:

- Never use a mop to clean a floor that is greasy or oily.
- Make sure the pads or brushes on the automatic scrubber are in good shape. Pads should be red or blue 3M cleaning pads or similar. Brushes should be nylon non-abrasive Malish 8129 series or a similar medium flex bristle brush.
- When using a deck brush, choose a medium/stiff bristle.
- When using a rotary floor machine, use a tan or red 3M pad or similar.
- When removing solution with a squeegee, use a soft, neoprene squeegee. **Do Not** use a water spray to remove cleaning solution from the floor because it will over-dilute the solution and cause grease and oil to fall back onto the floor.
- **Wax strippers should never be used on a Dur-A-Flex floor.**
- Spills should be cleaned up immediately to prevent staining and as a safety precaution.
- Surfaces should be adequately protected when moving heavy equipment across the floor.
- Through proper training and education, unnecessary wear of the floor (such as forklift spin and skid-marks) can be avoided.

RECOMMENDED CLEANING PRODUCTS

Determining the correct cleaning product for your Dur-A-Flex floor is based upon the amount and type of soiling the floor receives. We have divided these into four types, and recommended a cleaning product for each instance:

Application	Typical Areas	Product	Product Description
Traffic Areas (Light soils)	Retail Hallways,Healthcare, Labs, Dining Areas, Schools	EZ-CLEAN	EZ-CLEAN is a heavy-duty alkaline floor cleaner designed to remove protein or crude based soils.
Moderate/Heavy (Protein soils)	Grocery stores, Restaurant kitchens, Animal care, Food/Beverage Processing	EZ-CLEAN	
Moderate/Heavy (Crude soils)	Manufacturing/Industrial, Machine/Automotive Service Centers, Warehouses	SIMONIZ 969	SIMONIZ 969 is a heavy duty, highly alkalinefloor cleaner designed to remove machine andcrude oil from concrete
Rubber Tire Marks	Forklift tire spin	TIRE MARK REMOVER	TIRE MARK REMOVER is a heavy duty cleaner designed to remove rubber skid marks from polymer type floors as well as hard steel trowels floors.

The above Dur-A-Flex cleaning products may be ordered directly from Dur-A-Flex Customer Service at 1-800-253-3539 or via email at orders@dur-a-flex.com

WHEN TO CLEAN YOUR FLOOR

Dur-A-Flex floors are designed for and used in heavy traffic areas that typically accumulate foreign matter. Because of this, the recommended maintenance schedule for most areas is **once or twice daily** cleaning and regular "touch-ups" for spills. Less frequent cleaning of these areas results in a buildup of foreign matter, which diminishes the appearance, safety and service life of the floor.

Our CRYL-A-FLEX MMA products develop to full cure in one hour, and full cure for most epoxy and urethane systems is 7 days at 68°F. The lower the room temperature - the longer the cure time. Avoid chemical spills and full traffic during cure period. Premature exposure may cause permanent staining or discoloration. Do Not use abrasive cleaning methods during the first week after installation.

WALL CLEANING PROCESS:

1. Application – Apply EZ-CLEAN at a 1:64 dilution rate with hot water while using a deck brush, foamer/sprayer or powerwasher.
2. Scrub walls with deck brush.
3. Rinse walls with clean water.

For further technical assistance regarding this guide, please call Dur-A-Flex, Inc. Technical Services at (800) 253-3539, or e-mail Contact_Us@dur-a-flex.com.

JOINT GUIDELINES

DUR-A-FLEX
INNOVATION FROM THE FLOOR UP

95 Goodwin Street
East Hartford, CT 06108

Tel: 860-528-9838 • Toll Free 800-253-3539 • Fax: 860-528-2802 • Internet: www.dur-a-flex.com • E-Mail: info@dur-a-flex.com

The two basic joint types are Moving (dynamic) and Non-Moving (static).

Moving Joints

Construction, Expansion and Isolation joints are considered moving joints which allow horizontal and vertical movement between the slab and adjoining structures, such as walls and columns, helping to minimize cracking where the two meet.

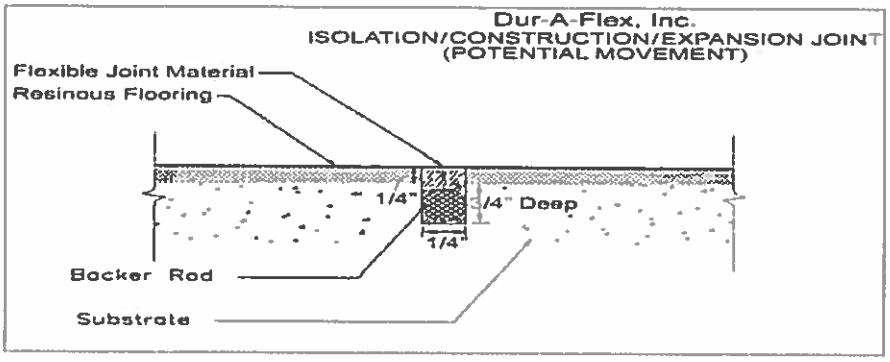

Prior to filling moving joints Dur-A-Flex, Inc. recommends "honoring" these joints by making a saw cut through the finished floor system at a depth of ¾" deep and ¼" wide with a diamond blade saw attached to a vacuum. A bond breaker such as backer rod (closed cell) must be added to the bottom of the joint.
Be sure to mark the location of the joints prior to the installation of the finished floor.

Potential cracking and or stress/stretch lines (white lines) may occur on all resinous floor systems over or on either side of moving joints if the joints are not saw cut and properly filled. Also if there is a variance of temperature of 20 degrees or more from the time the joint is filled and coated to its operational temperature, hairline cracking could occur even on non-moving joints.

Non-Moving Joints

Control and or Contraction joints are considered non-moving joints which accommodate shrinkage and relieve internal stresses during the curing process of the concrete.

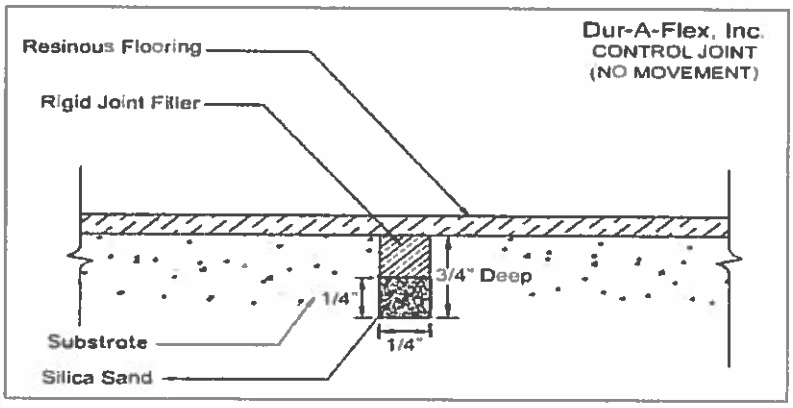

"Warranties: Seller warrants that its goods, as described on the face hereof, are free from any defects in material or workmanship. Seller makes no other warranty, express or implied, and all implied warranties of merchantability and fitness for a particular purpose are hereby disclaimed. Seller shall not be liable for prospective profits or special indirect or consequential damages. Seller's sole liability and buyer's exclusive remedy for breach of any warranty as expressly limited, at seller's option, to replacement at the original F.O.B. point or refund of purchase price. Seller shall not be responsible for any claim resulting from failure to utilize product in the manner in which it was intended and in accordance with instruction provided for use of product. Any claim for breach of warranty shall be deemed waived unless buyer shall give seller written notice of such claim within sixty (60) days after delivery and shall allow seller reasonable opportunity to investigate claim and inspect product."

Prior to filling non-moving joints be sure to prepare them by removing all laitance, debris and sealers to a depth of ¾"deep and ¼" wide with a diamond blade saw attached to a vacuum. A bond breaker such as silica sand (30-40 mesh) at ¼" deep may be added to the bottom. This will stop the joint material from seeping if the concrete is cracked through.

Repair of damaged/spalled joints

Saw cut each side of spalled area and chip out the center with a chipping hammer or consider the use of a series of blades to reach the proper width. If using multiple blades, the center blade should reach the depth of the original joint and the outer blades should achieve a cut creating a "T" shape after cutting.

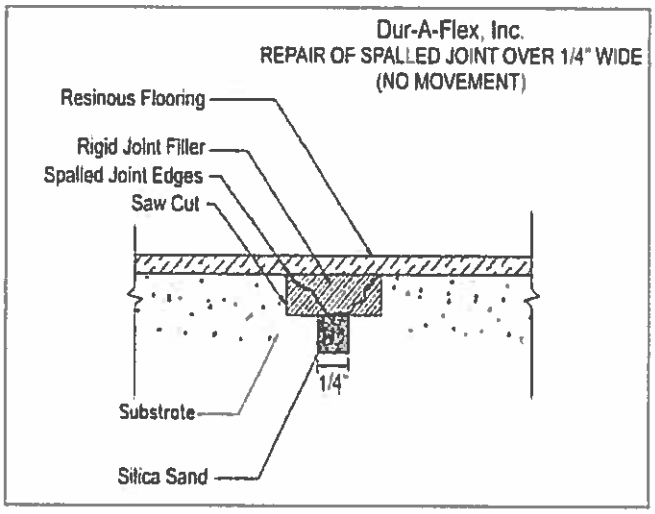

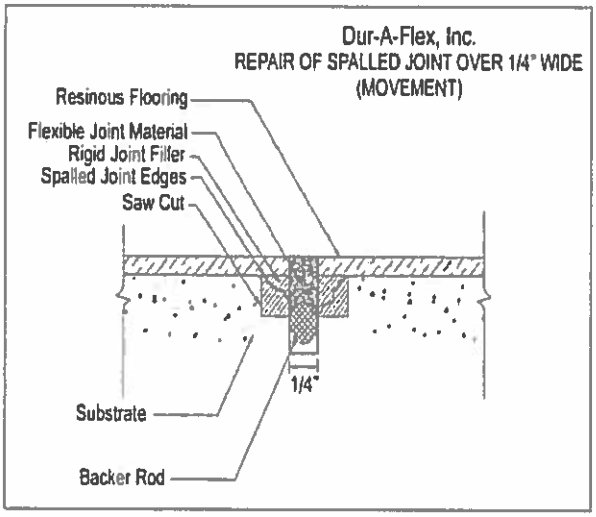

Installation Timing

The American Concrete Institute (ACI) recommends that filling of industrial floor joints be deferred 60-90 days after floor slab pour or as long as possible. This is to allow control and construction joints time to open closer to their ultimate width through the concrete shrinkage process. (In freezer/cooler areas, floor should be stabilized at ultimate operating temperature for 7 days prior to installation).

Prior to treatment of joints be sure to contact the facilities owner or manager to determine how long the concrete has cured as well as the location of moving and non-moving joints.

Refer to table below to determine what product is used where:

JOINTS	TYPE	BOND BREAKER	JOINT MATERIAL (1/4 inch wide)	JOINT MATERIAL (over ¼ inch wide)
Non-moving (Static)	Control/Contraction	Silica Sand (30–40 mesh) at 1/4" deep	• Epoxy flooring systems use Glaze #4 with Cab-O-Sil (No-Sag #2): Typical mix is 1 pint Glaze #4 hardener, 1 quart Glaze #4 resin, 3 quarts Cab-O-Sil (No-Sag #2) • Poly-Crete HF, MD and SL flooring systems typically cover and fill this size crack/joint • MMA flooring systems use MMA S/L Filler Mix	• Epoxy flooring systems use Glaze #4 with Dur-A-Crete. • Poly-Crete flooring systems use Poly-Crete MD or WR • MMA flooring systems use SL Filler Mix or Cryl-A-Tex.
Moving (Dynamic)	Expansion/Construction/ Isolation	Backer Rod 2 X wider than joint	Flexible joint material (Metzger/Meguire, Versaflex or equivalent)	Flexible joint material (Metzger/Meguire, Versaflex or equivalent)

References:

ACI 224 "Joints in Concrete Construction"
ASTM Standards "C 1193-0 and C-920-02"
National Ready Mixed Concrete Association "Concrete in Practice"
Metzger/McGuire, Inc.
SSPC

DUR-A-FLEX
INNOVATION FROM THE FLOOR UP

Dur-A-Flex, Inc.
TERMS AND CONDITIONS OF SALE

1. Contract Terms. These Terms and Conditions of Sale ("Terms") constitute the agreement between the parties, to the extent not prohibited by applicable law. Acceptance of Buyer's order and all sales by Dur-A-Flex, Inc. ("DAF") are expressly conditioned on these Terms. Buyer's acceptance of products is agreement to these Terms . DAF hereby rejects all terms and conditions of Buyer. Modifications, including any terms and conditions in Buyer's purchase order are not binding on DAF unless DAF agrees to the modifications in writing.

2. Payment Terms. Payment terms are net 30 days from the earlier of the date of invoice or date of shipment, unless specified otherwise. Goods exported from the USA may be subject to a down payment, with the balance payable through an Irrevocable Letter of Credit established through and confirmed by a bank acceptable to DAF. DAF shall have the right, in its sole discretion, to require payment before shipment or payment via letter of credit in the event that it determines that Buyer is delinquent in payment or will exceed credit limit. Overdue accounts shall bear simple interest at the rate of 1.5% per month (18% per annum) from the date of the invoice. Buyer shall pay all costs of collection of money due DAF, including attorney fees.

3. Delivery Terms. Delivery terms are F. O. B. DAF's plant, unless specified otherwise. As a convenience, DAF may prepay freight charges, and such charges may be added to the Buyer's invoice as a separate line item or reflected in the agreed price of the product. DAF may make partial shipments of Buyer orders, which shipments may be separately invoiced and shall be paid for when due, without regard to subsequent shipments. Delay in shipment or delivery of any particular portion of an order shall not relieve the Buyer of its obligation to accept the balance of the order. Regardless of the party paying freight charges, all risk of loss or damage in transit will be borne by the Buyer unless specified otherwise. Shipments shall be subject to overrun of 20% without penalty. Shipments of total quantities ordered must be taken within 10 business days of the order date, except that total quantities back-ordered are to be fully released and accepted within 6 months of the date of the order, unless otherwise agreed in writing. If not released as stated above, DAF reserves the right to charge all applicable and ancillary fees and/or carrying costs. Buyer agrees that an order shall in no event be subject to cancellation except by prior written consent of DAF, and then only when DAF is fully reimbursed for work performed, materials used and material which has been ordered specifically for Buyer's order and cannot be returned.

4. Delivery Dates. Delivery dates are estimated at the date that DAF accepts the Buyer's order. DAF shall endeavor to make deliveries within a reasonable time to the estimated delivery dates, but such dates are estimates of approximate dates of delivery, not a guarantee of a particular day of delivery. DAF shall not be liable to the Buyer for any damages, whether incidental, consequential or otherwise, for failure to fill orders, delays in delivery or any error in the filling of orders. Special or expedited delivery expenses will be charged to Buyer.

5. Design Components. It is the Buyer's responsibility to approve colors and decoration at the DAF's premises prior to commencement of a new production run, failing which the Buyer shall have no claim against the DAF for color variation or any other decoration defects whatsoever.

6. Taxes. Any tax imposed by Federal, State or other governmental authority on the sale of merchandise and service referred to in this order acknowledgment or invoice shall be paid by the Buyer in addition to the purchase price.

7. Standard Warranty and Limitations of Remedies and Liability covering all DAFs' goods. Dur-A-Flex, as a manufacturer of goods, stands behind its products by warranting that, subject to the limitations below, for a period of 1 year from shipment, its products are in conformity with its published specifications, subject to standard tolerances for variations, except that color cannot be warranted as to uniformity of shade or conformity to samples. If Dur-A-Flex determines a product does not meet this warranty, it will replace it, refund the purchase price or give a credit to the purchaser, at its sole option, as Buyer's sole remedy.

   Our products are intended for use by customers with skill in the industry. Technical recommendations on use of Dur-A-Flex products can only be based on present experience and knowledge and reliability of data provided regarding a site. However, many factors beyond the control of Dur-A-Flex can affect the products. Thus, customers must satisfy themselves of suitability of the product for site conditions.

Dur-A-Flex is not an installer and therefore does NOT warrant or guarantee:
1. The work of any person or company installing its goods;
2. Failure of the product due to improper design by the engineer or architect;
3. Failure of the product due to misuse, abuse, alteration, improper storage or handling, or not using or cleaning the product in the manner in which it was intended and in accordance with instructions provided by Dur-A-Flex;
4. Bond failure of the product caused by deficiencies in the substrate including, but not limited to, the presence of ionic compounds or soluble salts, alkali silicate reaction, alkali aggregate reaction, shale-pop, and other expansive reactions of aggregates and reinforcements;

Dur-A-Flex's sole liability, and Customer's exclusive remedy, for breach of any warranty as expressly limited, at Dur-A-Flex's option, is to replace material at the original FOB point or refund of the purchase price. A written notice of claim for breach of warranty must be delivered to Dur-A-Flex within sixty (60) days of observation and no more than one (1) year after delivery of the product. Dur-A-Flex shall be allowed reasonable opportunity to investigate the claim and inspect the product. In no event may Customer recover damages exceeding the price paid by the Customer for the specific goods as to which the claim is made, whether based on contract, tort, or any other theory.

DUR-A-FLEX MAKES NO OTHER WARRANTY, EXPRESS OR IMPLIED, AND ALL IMPLIED WARRANTIES OF MERCHANTABILITY AND FITNESS FOR A PARTICULAR PURPOSE ARE HEREBY DISCLAIMED. DUR-A-FLEX SHALL NOT BE LIABLE FOR, and CUSTOMER WAIVES ALL CLAIMS FOR, PROSPECTIVE PROFITS OR SPECIAL, INDIRECT, INCIDENTAL OR CONSEQUENTIAL DAMAGES OR ANY OTHER DAMAGES OR REMEDIES NOT SPECIFICALLY PROVIDED ABOVE, WHETHER BASED ON NEGLIGENCE, BREACH OF WARRANTY, STRICT LIABILITY IN TORT OR ANY OTHER CAUSE OF ACTION. ALL WARRANTIES ARE NULL AND VOID IF CUSTOMER HAS NOT PAID IN FULL IN ACCORDANCE WITH DUR-A-FLEX'S PAYMENT TERMS.

Dur-A-Flex, Inc. will not be liable for, and the Customer shall defend, indemnify and hold harmless (including without limitation costs and attorney's fees) Dur-A-Flex, Inc. from, any loss, damage or injury to persons or property, or claim thereof, resulting from (A) Customer's or any third party's or end user's handling, storage, transportation, resale, application or other use of the goods, or in combination with other substances, or otherwise or (B) selection or recommendation by Dur-A-Flex, Inc. of any applicator or other contractor.

Any controversy or claim arising out of or relating to the within Warranty, terms and conditions shall be settled by arbitration in accordance with the commercial arbitration rules of the American Arbitration Association, and judgment upon the award rendered by the arbitrator may be entered in any court having jurisdiction thereof. Venue for the arbitration shall be in Hartford, Connecticut.

8. Specifications. Buyer accepts DAF's standard product specifications. Buyer waives all claims relating to products sold by DAF unless notice thereof is received in writing by the DAF within 30 days after delivery of the products which are the subject of the claim(s). In no event shall DAF be liable for any defective good if examination discloses that the good has been taxed beyond its normal capacity or the defective condition of such good was caused by misuse, abuse, improper installation or application, improper maintenance or repair, alteration, accident or negligence in use, storage, transportation or handling.

9. Safety. USE OF THE GOODS OR MERCHANDISE SUPPLIED BY DAF IN OR WITH SUBSTANCES WHOSE CHEMICAL OR OTHER COMPOSITION OR CHARACTERISTICS ARE INCOMPATIBLE WITH SUCH GOODS OR MERCHANDISE IS A MISUSE BY BUYER OF SUCH GOODS OR MERCHANDISE. ALL RESPONSIBILITY TO TEST AND OTHERWISE ASSURE COMPATIBILITY IS ASSUMED BY THE BUYER, WHETHER OR NOT DAF MAY PERFORM ANY TESTS FOR COMPATIBILITY (WHICH TESTING IS NOT A DUTY OF DAF) AND REGARDLESS OF THE RESULTS OF ANY SUCH TEST, DAF MAKES NO REPRESTATION OR WARRANTY, EXPRESS OR IMPLIED, THAT ANY TESTS BY DAF ARE ADEQUATE OR SUFFICIENT FOR BUYERS PURPOSES, AND BUYER AGREES NOT TO HOLD DAF RESPONSIBLE FOR SUCH ADEQUACY OR SUFFICIENCY. Upon request by Buyer, DAF will provide applicable information (including but not limited to Material Safety Data Sheets) concerning the safety and health aspects of its goods. Buyer agrees to communicate such information to Buyer's employees, agents, contractors and customers, and to require such persons to further communicate such information to all persons that they may reasonably foresee will be exposed to or handle such goods.

10. Non-conforming Goods. If Buyer provides DAF with notice within ten (10) days of learning of a possible warranty breach and reasonable opportunity to inspect: DAF may, at its option, either repair or replace said nonconforming goods or repay the price thereof. If DAF requests the return of the nonconforming goods, no obligation for breach of warranty shall arise unless the goods have been returned to DAF within thirty (30) days after such request is made. Buyer's failure to provide timely notice shall constitute a waiver of its claims. The aforesaid obligations of DAF to repair or replace defective or nonconforming goods or repay the purchase price thereof is expressly agreed by the parties to be the limit of DAF's liability and Buyer's sole and exclusive remedy for warranty.

Dur-A-Flex, Inc.
TERMS AND CONDITIONS OF SALE Cont'd

11. Damages. IN NO EVENT WILL DAF BE LIABLE FOR LOSS OF USE OR ANY INDIRECT, SPECIAL, INCIDENTAL OR CONSEQUENTIAL DAMAGES, LOSS OR EXPENSE ARISING IN CONNECTION WITH THIS ORDER. DAF's maximum liability shall not in any case exceed the contract price for the goods claimed to be defective or unsuitable.

12. Indemnification. BUYER ASSUMES ALL RISKS AND AGREES TO INDEMNIFY AND HOLD DAF HARMLESS AGAINST ALL CLAIMS AND LIABILITY (INCLUDING LIABILITY BASED ON A CLAIM THAT DAF IS NEGLIGENT OR STRICTLY LIABLE) ARISING AS A RESULT OF USE OR POSSESSION OF THE GOODS SUPPLIED UNDER THE TERMS OF THIS CONTRACT. Any advice furnished by DAF, as to any use of the goods by Buyer, is offered "as is" without warranty of any kind, is gratuitous and shall not affect the limitations on DAF's warranties or Buyer's agreement to indemnify. Buyer acknowledges that this Agreement is for the purchase of goods, not services, and that DAF shall therefore have no liability to Buyer for any harm or loss caused by advice received by Buyer from any of DAF's agents or employees. If a claim is brought against DAF by an agent or employee of Buyer, Buyer agrees to defend, indemnify and hold DAF harmless from and against any and all liability, loss, damages, and expense relating to the claim.

13. Setoff. DAF shall have the right to set-off all amounts due to it against payments owed by it whether arising out of this or any other contract between DAF and Buyer, its subsidiaries, or affiliates.

14. Force Majeure. Neither party shall be liable to the other party or any other person for any failure or delay in the performance of any obligation hereunder, except for payment obligations, due directly or indirectly to events beyond its reasonable control, including but not limited to, fire, storm, flood, earthquake, explosion, accident, acts of the public enemy, terrorism, wars, riots and public disorders, epidemics, sabotage, strikes, lockouts, labor disputes, labor shortages, work slowdowns, stoppages or delays, shortages, embargoes or failure or delay of energy, materials, decoration, art work, printing plates, supplies or equipment, transportation embargoes or delays, Acts of God, breakdowns in machinery or equipment, acts or regulations or priorities of federal, state, provincial, or local governments or branches or agencies thereof, and government contracts or shipments to fulfill government contracts.

15. Entire Agreement, Governing Law. There are no terms or conditions with respect to this contract, which are not specified herein. These terms and conditions constitute the complete and exclusive agreement between the parties concerning the subject matter thereof and supersede all prior representations, statements and promises made by DAF which are not expressly stated herein. Irrespective of the place of execution or performance the purchase order shall be governed by and construed in accordance with the laws of the State of Connecticut and all actions arising out of this contract shall be brought in the State of Connecticut.

16. Price Changes. Notwithstanding the price on the order, DAF reserves the right to modify the price in accordance with any change in labor, applicable law, exchange rate for exports, fuel surcharges where DAF pays for shipping or raw material costs, which have been instituted at or before the date of shipment. Where packaging other than standard packaging is necessary, the expense will be charged to the Buyer. DAF reserves a security interest in any goods sold to the extent of the invoiced amount to secure payment of Buyer's obligation. If Buyer defaults, it agrees to make the goods available so that DAF may peaceably repossess. A copy of the invoice may be filed with the appropriate office at any time as a financing statement. At DAF's request, Buyer will execute any instrument DAF requires to perfect its security interest.

17. Returns. Product returns will not be accepted for replacement or credit without prior written authorization from DAF and a return authorization number, in accordance with DAF's current return policy. A return authorization number must be requested from DAF through the Regional Sales Manager. Merchandise returned is not to exceed the quantity authorized. All returns must have freight prepaid. No cash on delivery for freight will be accepted. Credit will be issued only after merchandise is inspected by DAF.

18. Credit. All orders are subject to approval of the credit department. DAF shall have the right, at DAF's sole discretion, to modify, change or withdraw credit terms at any time without notice and to request guarantees, security or payment in advance for any order or from any Buyer.

19. **GENERAL** (a) Assignment and Delegations: Buyer will not assign any rights or delegate any duties under the Agreement without the written consent of DAF. (b) Statute Of Limitations: any action of any kind under this contract must be brought within one (1) year of the date of delivery. (c) Modification and Termination: This contract shall not be modified or terminated unless expressly agreed by both parties in writing. No waiver or any default hereunder shall be deemed a waiver of the obligation of future compliance, and any provision waived shall remain in full force and effect. In addition to its other remedies, DAF may cancel any unfulfilled part of the contract without any liability and without notice if Buyer fails to pay amounts due or Buyer shall become bankrupt, insolvent, makes an assignment for the benefit of creditors or a receiver is appointed for Buyer, or Buyer is acquired or sold in whole or in part. (d) Sole Agreement: Unless otherwise agreed in writing, this constitutes the entire agreement between DAF and Buyer, and supersedes any previous agreement, representation or warranty, whether express or implied, regarding the goods. Buyer acknowledges that no representations, understandings, conditions, or agreements have been made or relied upon other than those specifically stated in this Agreement.

DUR-A-FLEX
INNOVATION FROM THE FLOOR UP

PRODUCT DATA SHEET

95 Goodwin Street
East Hartford, CT 06108

Tel: 800-253-3539 • Fax: 860-528-2802 • www.dur-a-flex.com • contact_us@dur-a-flex.com

ACCELERA HC

DESCRIPTION

ACCELERA HC is part of the ACCELERA family of fast-track, seamless floor systems. ACCELERA HC is a 100% solids hybrid floor system consisting of a POLY-CRETE SL self-leveling cementitious urethane base coat with a decorative vinyl chip broadcast, an ACCELERA second broadcast of decorative vinyl chips, and two clear ACCELERA topcoats. ACCELERA HC is UV stable and offers excellent stain resistance.

BENEFITS

- Fast application and cure time reduces installation time and disruption to operations
- High moisture tolerance – can be installed on 7 day old concrete
- Color stable
- Low odor
- 0 VOC
- Excellent chemical and stain Resistance
- Excellent wear characteristics

LIMITATIONS

This product is best suited for application in temperatures between 60°F and 85°F. Application at relative humidity levels of 20% or less will substantially increase cure times. Substrate must be clean, sound, and dry. Please refer to the ACCELERA HC Application Instructions for a complete list of limitations.

CHEMICAL RESISTANCE

This product is resistant to many common chemicals. Please refer to the master Chemical Resistance Chart on our website for actual resistance to specific chemicals/reagents.

TYPICAL USES

- Restaurants
- Grocery
- Healthcare
- Pharmaceutical Mfg
- Retail

COLORS

ACCELERA HC floor system is available in MACRO or MICRO decorative chips. The MACRO and MICRO chips are available in standard and custom multi-color pre-blends. Please refer to the MACRO and MICRO Chip Color Selector Chart.

PACKAGING & STORAGE CONDITIONS

POLY-CRETE SL is available in pre-measured kits that consist of resin, hardener and aggregate. ACCELERA is available in pre-measured kits. Each kit consists of resin, hardener and, where applicable, a pre-measured color pack. Kit coverage depends on the application - see spread rates below. A smaller, approximate 25 square foot kit is available for smaller areas and for top-coating cove. Shelf life is 12 months from ship date in the original unopened container. Vinyl chips are available in 10 lb. and 55 lb. boxes.

APPLICATION METHOD/SPREAD RATE

POLY-CRETE SL is applied to a properly prepared area at the required thickness using a "V" notched squeegee. The freshly placed material is then loop rolled into which the proper size colored chip blend is broadcast to excess to achieve the desired aesthetics. Allow a minimum of 6 hours for the Base Coat to cure before sweeping, sanding or vacuuming. A second chip broadcast is delivered into ACCELERA. ACCELERA is applied with a notched or 12" flat window squeegee followed by a cross roll using a 3/8" nap roller in accordance with the approximate spread rates as follows:

Base Coat w/Broadcast:	55 SF/Kit
2nd Broadcast Coat:	65 SF/Kit
Grout Coat:	65 SF/Kit
Topcoat:	200 SF/Kit

NOTE: Above rates calculated using the standard Large kit.

"Warranties: Seller warrants that its goods, as described on the face hereof, are free from any defects in material or workmanship. **SELLER MAKES NO OTHER WARRANTY, EXPRESS OR IMPLIED, AND ALL IMPLIED WARRANTIES OF MERCHANTABILITY AND FITNESS FOR A PARTICULAR PURPOSE ARE HEREBY DISCLAIMED. SELLER SHALL NOT BE LIABLE FOR PROSPECTIVE PROFITS OR SPECIAL INDIRECT OR CONSEQUENTIAL DAMAGES.** Seller's sole liability and buyer's exclusive remedy for breach of any warranty as expressly limited, at seller's option, to replacement at the original F.O.B. point or refund of purchase price, but in no event will Seller's liability exceed the total purchase price of the defective product. Seller shall not be responsible for any claim resulting from failure to utilize product in the manner in which it was intended and in accordance with instruction provided for use of product. Any claim for breach of warranty shall be deemed waived unless buyer shall give seller written notice of such claim within sixty (60) days after delivery and shall allow seller reasonable opportunity to investigate claim and inspect product."

ACCELERA HC

PRODUCT PROPERTIES

Weight Solids, % (Resin/Hardener/Powder)	100%
Volatile Organic Compounds Content (VOC)	0 g/L
Compressive Strength (ASTM C579)	18,000 psi
Tensile Strength (ASTM D638)	2,600 psi
Service Temperature	Up to 200 degrees F
Taber Abrasion Resistance (ASTM D4060) ASTM D 4060, 1000g load, 1000 cycles, CS-17 wheel	27 mg
Coefficient of Friction (ASTM D2047)	0.6
Shore D Hardness (ASTM D2240)	70
Gloss (ASTM D523) 60°	90
Pot Life at 70°F, 50%RH Working Time at 70°F ,50%RH Re-coat Window at 70°F, 50%RH	7-10 minutes 10 minutes 16 hours
Foot Traffic (per coat): 80°F, 50%RH 70°F, 50%RH 60°F, 50%RH	1.5 – 2 hours 2 – 2.5 hours 2.5 – 3 hours
Full Service	24 hours
Full Chemical Resistance	7 days

DRAWINGS AND DETAILS

Standard CAD drawings and details are available for coves, drains, breaches, transitions, etc. Please refer to the master Drawings and Details guide for actual drawings.

JOINT GUIDELINES

Refer to the Joint Guidelines on our website for complete details.

MOISTURE CONCERNS

Normal limits for moisture vapor transmission for ACCELERA HC floor systems are 20 lbs./1,000 sq. ft./24 hour using the calcium chloride test per ASTM F-1869 or 99% relative humidity using in-situ Relative Humidity Testing per ASTM F-2170. Please refer to the Floor Evaluation Guidelines at www.dur-a-flex.com for complete details.

CLEANING

This product is considered a low maintenance flooring solution, however, certain textures and service environments do require certain procedures. Please refer to the master Cleaning Guide on our website.

CAUTION

Follow the Hazardous Materials Identification System labeling guide for proper personal protective equipment to use when handling this product. Use only as directed. KEEP OUT OF REACH OF CHILDREN.

Before using any DUR-A-FLEX, Inc. product, be sure the Material Safety Data Sheet is read and understood.

PAINTING

PART 1 - GENERAL

1.1 RELATED DOCUMENTS

A. Drawings and general provisions of the Contract, including General and Supplementary Conditions and Division 1 Specification Sections, apply to this Section.

1.2 SUMMARY

A This Section includes surface preparation and field painting of the following:

1. Exposed exterior items and surfaces.
2. Exposed interior items and surfaces.
3. Surface preparation, priming, and finish coats specified in this Section are in addition to shop priming and surface treatment specified in other Sections.

B. Paint exposed surfaces, except where the paint schedules indicate that a surface or material is not to be painted or is to remain natural. If the paint schedules do not specifically mention an item or a surface, paint the item or surface the same as similar adjacent materials or surfaces whether or not schedules indicate colors. If the schedules do not indicate color or finish, the Architect will select from standard colors and finishes available.

1. Painting includes field painting of exposed bare and covered pipes and ducts (including color coding), hangers, exposed steel and ironwork, and primed metal surfaces of mechanical and electrical equipment.

2. Painting of architectural exposed steel including exterior galvanized framing is part of this Section.

C. Do not paint prefinished items, concealed surfaces, finished metal surfaces, operating parts, and labels.

1. Prefinished items include the following factory-finished components:

   a. Architectural woodwork and casework.
   b. Finished mechanical and electrical equipment.
   c. Light fixtures.
   d. Distribution cabinets.

2. Concealed surfaces include walls or ceilings in the following generally inaccessible spaces:

3.

   a. Furred areas.
   b. Ceiling plenums.
   c. Pipe spaces.
   d. Duct shafts.

4. Finished metal surfaces include the following:

a. Anodized aluminum.
b. Stainless steel.
c. Chromium plate.
d. Copper.
e. Bronze and brass.

5. Operating parts include moving parts of operating equipment and the following:

a. Valve and damper operators.
b. Linkages.
c. Sensing devices.
d. Motor and fan shafts.

6. Labels: Do not paint over Underwriters Laboratories (UL), Factory Mutual (FM), or other code-required labels or equipment name, identification, performance rating, or nomenclature plates.

D. Related Sections include the following:

1. Division 2 Section "Hot-Mix Asphalt Paving" for traffic-marking paint.
2. Division 5 Section "Metal Fabrications" for shop priming ferrous metal.
3. Division 8 Section "Steel Doors and Frames" for shop priming steel doors and frames.
4. Division 8 Section "Wood Windows" for shop priming unclad wood windows.
5. Division 9 Section "Gypsum Board Assemblies" for surface preparation for gypsum board.
6. Division 9 Section "Exterior Wood Stains" for exterior wood stains.

1.3 DEFINITIONS

A. General: Standard coating terms defined in ASTM D 16 apply to this Section.

1. Eggshell refers to low-sheen finish with a gloss range between 5 and 20 when measured at a 60-degree meter.
2. Satin refers to low-sheen finish with a gloss range between 15 and 35 when measured at a 60-degree meter.
3. Semigloss refers to medium-sheen finish with a gloss range between 30 and 65 when measured at a 60-degree meter.
4. Full gloss refers to high-sheen finish with a gloss range more than 65 when measured at a 60-degree meter.

1.4 SUBMITTALS

A. Product Data: For each paint system specified. Include block fillers and primers.

1. Material List: Provide an inclusive list of required coating materials. Indicate each material and cross-reference specific coating, finish system, and application. Identify each material by manufacturer's catalog number and general classification.
2. Manufacturer's Information: Provide manufacturer's technical information, including label analysis and instructions for handling, storing, and applying each coating material proposed for use.
3. Certification by the manufacturer that products supplied comply with local regulations controlling use of volatile organic compounds (VOCs).

B. Samples for Initial Selection: Manufacturer's color charts showing the full range of colors available for each type of finish-coat material indicated.

1. After color selection, the Architect will furnish color chips for surfaces to be coated.

C. Samples for Verification: Of each color and material to be applied, with texture to simulate actual conditions, on representative Samples of the actual substrate.

1. Provide stepped Samples, defining each separate coat, including block fillers and primers. Use representative colors when preparing Samples for review. Resubmit until required sheen, color, and texture are achieved.
2. Provide a list of materials and applications for each coat of each sample. Label each sample for location and application.
3. Submit Samples on the following substrates for the Architect's review of color and texture only:

a. Painted Wood: Provide two 12-inch square samples of each color and material on hardboard.
b. Stained or Natural Wood: Provide two 4-by-8-inch samples of natural- or stained-wood finish on actual wood surfaces.
c. Ferrous Metal: Provide two 4-inch square samples of flat metal and two 8-inch long samples of solid metal for each color and finish.

D. Qualification Data: For firms and persons specified in the "Quality Assurance" Article to demonstrate their capabilities and experience. Include lists of completed projects with project names and addresses, names and addresses of architects and owners, and other information specified.

1.5 QUALITY ASSURANCE

A. Applicator Qualifications: Engage an experienced applicator who has completed painting system applications similar in material and extent to that indicated for this Project with a record of successful in-service performance.

B. Source Limitations: Obtain block fillers, primers, and undercoat materials for each coating system from the same manufacturer as the finish coats.

C. Benchmark Samples (Mockups): Provide a full-coat benchmark finish sample of each type of coating and substrate required on the Project. Comply with procedures specified in PDCA P5. Duplicate finish of approved prepared samples.

1. The Architect will select one room or surface to represent surfaces and conditions for each type of coating and substrate to be painted.

a. Wall Surfaces: Provide samples on at least 100 sq. ft. of wall surface.
b. Small Areas and Items: The Architect will designate an item or area as required.

2. After permanent lighting and other environmental services have been activated, apply coatings in this room or to each surface according to the Schedule or as specified. Provide required sheen, color, and texture on each surface.

a. After finishes are accepted, the Architect will use the room or surface to evaluate coating systems of a similar nature.

3. Final approval of colors will be from job-applied samples.

1.6 DELIVERY, STORAGE, AND HANDLING

A. Deliver materials to the Project Site in manufacturer's original, unopened packages and containers bearing manufacturer's name and label, and the following information:

1. Product name or title of material.
2. Product description (generic classification or binder type).
3. Manufacturer's stock number and date of manufacture.
4. Contents by volume, for pigment and vehicle constituents.
5. Thinning instructions.
6. Application instructions.
7. Color name and number.
8. VOC content.

B. Store materials not in use in tightly covered containers in a well-ventilated area at a minimum ambient temperature of 45 deg F. Maintain containers used in storage in a clean condition, free of foreign materials and residue.

1. Protect from freezing. Keep storage area neat and orderly. Remove oily rags and waste daily. Take necessary measures to ensure that workers and work areas are protected from fire and health hazards resulting from handling, mixing, and application.

1.7 PROJECT CONDITIONS

A. Apply water-based paints only when the temperature of surfaces to be painted and surrounding air temperatures are between 50 and 90 deg F.

B. Apply solvent-thinned paints only when the temperature of surfaces to be painted and surrounding air temperatures are between 45 and 95 deg F.

C. Do not apply paint in snow, rain, fog, or mist; or when the relative humidity exceeds 85 percent; or at temperatures less than above the dew point; or to damp or wet surfaces.

1. Painting may continue during inclement weather if surfaces and areas to be painted are enclosed and heated within temperature limits specified by manufacturer during application and drying periods.

1.8 EXTRA MATERIALS

A. Furnish extra paint materials from the same production run as the materials applied in the quantities described below. Package paint materials in unopened, factory-sealed containers for storage and identify with labels describing contents. Deliver extra materials to the Owner.

1. Quantity: Furnish the Owner with an additional 5 percent, but not less than 1 gal. Or 1 case, as appropriate, of each material and color applied.

1.9 CLEANING MATERIALS AND EQUIPMENT

A. Water for Cleaning: Clean, potable, free of oils, acids, alkalis, salts, and organic matter.

B. Water Temperature: Water shall not exceed a temperature of 100 deg. F.

C. Brushes: Fiber bristle only.

D. Job-mixed Detergent Solution: Solution prepared by mixing 3 oz. Of trisodium phosphate (TSP), 1 oz. Of laundry detergent (Tide, All, etc.), 1 quart of 5 percent sodium hypochlorite (beach), and 3 quarts of warm water for each gallon of solution required.

E. Spray Equipment: Provide Equipment: Provide equipment for controlled spray application of water and chemical cleaners, if any, at rates indicated for pressure, measured at spray tip, and for volume. Adjust pressure and volume, as required, to ensure that damage to stone or concrete does not result from cleaning methods.

1. For water spray application, provide a fan-shaped spray tip that disperses water at an angle of not less than 15 degrees.

PART 2 - PRODUCTS

2.1 MANUFACTURERS

A. Available Products: Subject to compliance with requirements, products that may be incorporated into the Work include, but are not limited to, products listed in the paint schedules.

B. Manufacturers Names: The following manufacturers are referred to in the paint schedules by use of shortened versions of their names, which are shown in parentheses:

1. Devoe & Raynolds Co. (Devoe).
2. Glidden Co. (The) (Glidden).
3. Benjamin Moore & Co. (Moore).
4. PPG Industries, Inc. (PPG).
5. Pratt & Lambert, Inc. (P & L).
6. Sherwin-Williams Co. (S-W).

2.2 PAINT MATERIALS, GENERAL

A. Material Compatibility: Provide block fillers, primers, undercoats, and finish-coat materials that are compatible with one another and the substrates indicated under conditions of service and application, as demonstrated by manufacturer based on testing and field experience.

B. Material Quality: Provide manufacturer's best-quality paint material of the various coating types specified. Paint-material containers not displaying manufacturer's product identification will not be acceptable.

1. Proprietary Names: Use of manufacturer's proprietary product names to designate colors or materials is not intended to imply that products named are required to be used to the exclusion of equivalent products of other manufacturers. Furnish manufacturer's material data and certificates of performance for proposed substitutions.

C. Colors: Provide color selections made by the Architect.

PART 3 - EXECUTION

3.1 EXAMINATION

A. Examine substrates, areas, and conditions, with the Applicator present, under which painting will be performed for compliance with paint application requirements.

1. Do not begin to apply paint until unsatisfactory conditions have been corrected and surfaces receiving paint are thoroughly dry.
2. Start of painting will be construed as the Applicator's acceptance of surfaces and conditions within a particular area.

B. Coordination of Work: Review other Sections in which primers are provided to ensure compatibility of the total system for various substrates. On request, furnish information on characteristics of finish materials to ensure use of compatible primers.

1. Notify the Architect about anticipated problems using the materials specified over substrates primed by others.

3.2 PREPARATION

A. General: Remove hardware and hardware accessories, plates, machined surfaces, lighting fixtures, and similar items already installed that are not to be painted. If removal is impractical or impossible because of the size or weight of the item, provide surface-applied protection before surface preparation and painting.

1. After completing painting operations in each space or area, reinstall items removed using workers skilled in the trades involved.

B. Cleaning: Before applying paint or other surface treatments, clean the substrates of substances that could impair the bond of the various coatings. Remove oil and grease before cleaning.

1. Schedule cleaning and painting so dust and other contaminants from the cleaning process will not fall on wet, newly painted surfaces.

C. Surface Preparation: Clean and prepare surfaces to be painted according to manufacturer's written instructions for each particular substrate condition and as specified.

1. Provide barrier coats over incompatible primers or remove and reprime.
2. Cementitious Materials: Prepare concrete, concrete masonry block, cement plaster, and mineral-fiber-reinforced cement panel surfaces to be painted. Remove efflorescence, chalk, dust, dirt, grease, oils, and release agents. Roughen as required to remove glaze. If hardeners or sealers have been used to improve curing, use mechanical methods of surface preparation.

   a. Use abrasive blast-cleaning methods if recommended by paint manufacturer.
   b. Determine alkalinity and moisture content of surfaces by performing appropriate tests. If surfaces are sufficiently alkaline to cause the finish paint to blister and burn, correct this condition before application. Do not paint surfaces where moisture content exceeds that permitted in manufacturer's written instructions.
   c. Clean concrete floors to be painted with a 5 percent solution of muriatic acid or other etching cleaner. Flush the floor with clean water to remove acid, neutralize with ammonia, rinse, allow to dry, and vacuum before painting.

3. Wood: Clean surfaces of dirt, oil, and other foreign substances with scrapers, mineral spirits, and sandpaper, as required. Sand surfaces exposed to view smooth and dust off.

a. Scrape and clean small, dry, seasoned knots, and apply a thin coat of white shellac or other recommended knot sealer before applying primer. After priming, fill holes and imperfections in finish surfaces with putty or plastic wood filler. Sand smooth when dried.
b. Prime, stain, or seal wood to be painted immediately on delivery. Prime edges, ends, faces, undersides, and backsides of wood, including cabinets, counters, cases, and paneling.
c. When transparent finish is required, backprime with spar varnish.
d. Seal tops, bottoms, and cutouts of unprimed wood doors with a heavy coat of varnish or sealer immediately on delivery.

4. Ferrous Metals: Clean ungalvanized ferrous-metal surfaces that have not been shop coated; remove oil, grease, dirt, loose mill scale, and other foreign substances. Use solvent or mechanical cleaning methods that comply with the Steel Structures Painting Council's (SSPC) recommendations.

   a. Blast steel surfaces clean as recommended by paint system manufacturer and according to requirements of SSPC-SP 10.
   b. Touch up bare areas and shop-applied prime coats that have been damaged. Wire-brush, clean with solvents recommended by paint manufacturer, and touch up with the same primer as the shop coat.

5. Galvanized Surfaces: Clean galvanized surfaces with nonpetroleum-based solvents so surface is free of oil and surface contaminants. Remove pretreatment from galvanized sheet metal fabricated from coil stock by mechanical methods.

D. Materials Preparation: Mix and prepare paint materials according to manufacturer's written instructions.

1. Maintain containers used in mixing and applying paint in a clean condition, free of foreign materials and residue.
2. Stir material before application to produce a mixture of uniform density. Stir as required during application. Do not stir surface film into material. If necessary, remove surface film and strain material before using.
3. Use only thinners approved by paint manufacturer and only within recommended limits.

E. Tinting: Tint each undercoat a lighter shade to simplify identification of each coat when multiple coats of the same material are applied. Tint undercoats to match the color of the finish coat, but provide sufficient differences in shade of undercoats to distinguish each separate coat.

3.3 APPLICATION

A. General: Apply paint according to manufacturer's written instructions. Use applicators and techniques best suited for substrate and type of material being applied.

1. Paint colors, surface treatments, and finishes are indicated in the schedules.
2. Do not paint over dirt, rust, scale, grease, moisture, scuffed surfaces, or conditions detrimental to formation of a durable paint film.
3. Provide finish coats that are compatible with primers used.
4. The term "exposed surfaces" includes areas visible when permanent or built-in fixtures, convector covers, covers for finned-tube radiation, grilles, and similar components are in place. Extend coatings in these areas, as required, to maintain the system integrity and provide desired protection.

5. Paint surfaces behind movable equipment and furniture the same as similar exposed surfaces. Before the final installation of equipment, paint surfaces behind permanently fixed equipment or furniture with prime coat only.
6. Paint interior surfaces of ducts with a flat, nonspecular black paint where visible through registers or grilles.
7. Paint back sides of access panels and removable or hinged covers to match exposed surfaces.
8. Finish exterior doors on tops, bottoms, and side edges the same as exterior faces.
9. Sand lightly between each succeeding enamel or varnish coat.

B. Scheduling Painting: Apply first coat to surfaces that have been cleaned, pretreated, or otherwise prepared for painting as soon as practicable after preparation and before subsequent surface deterioration.

1. The number of coats and the film thickness required are the same regardless of application method. Do not apply succeeding coats until the previous coat has cured as recommended by the manufacturer. If sanding is required to produce a smooth, even surface according to manufacturer's written instructions, sand between applications.
2. Omit primer on metal surfaces that have been shop primed and touchup painted.
3. If undercoats, stains, or other conditions show through final coat of paint, apply additional coats until paint film is of uniform finish, color, and appearance. Give special attention to ensure edges, corners, crevices, welds, and exposed fasteners receive a dry film thickness equivalent to that of flat surfaces.
4. Allow sufficient time between successive coats to permit proper drying. Do not recoat surfaces until paint has dried to where it feels firm, does not deform or feel sticky under moderate thumb pressure, and where application of another coat of paint does not cause the undercoat to lift or lose adhesion.

C. Application Procedures: Apply paints and coatings by brush, roller, spray, or other applicators according to manufacturer's written instructions.

1. Brushes: Use brushes best suited for the type of material applied. Use brush of appropriate size for the surface or item being painted.
2. Rollers: Use rollers of carpet, velvet back, or high-pile sheep's wool as recommended by the manufacturer for the material and texture required.
3. Spray Equipment: Use airless spray equipment with orifice size as recommended by the manufacturer for the material and texture required.

D. Minimum Coating Thickness: Apply paint materials no thinner than manufacturer's recommended spreading rate. Provide the total dry film thickness of the entire system as recommended by the manufacturer.

E. Mechanical and Electrical Work: Painting of mechanical and electrical work is limited to items exposed in equipment rooms and in occupied spaces.

F. Mechanical items to be painted include, but are not limited to, the following:

1. Piping, pipe hangers, and supports.
2. Heat exchangers.
3. Tanks.
4. Ductwork.
5. Insulation.
6. Accessory items.

G. Electrical items to be painted include, but are not limited to, the following:

1. Conduit and fittings.
2. Panel boards.

H. Block Fillers: Apply block fillers to concrete masonry block at a rate to ensure complete coverage with pores filled.

I. Prime Coats: Before applying finish coats, apply a prime coat of material, as recommended by the manufacturer, to material that is required to be painted or finished and that has not been prime coated by others. Recoat primed and sealed surfaces where evidence of suction spots or unsealed areas in first coat appears, to ensure a finish coat with no burn through or other defects due to insufficient sealing.

J. Pigmented (Opaque) Finishes: Completely cover surfaces as necessary to provide a smooth, opaque surface of uniform finish, color, appearance, and coverage. Cloudiness, spotting, holidays, laps, brush marks, runs, sags, ropiness, or other surface imperfections will not be acceptable.

K. Transparent (Clear) Finishes: Use multiple coats to produce a glass-smooth surface film of even luster. Provide a finish free of laps, runs, cloudiness, color irregularity, brush marks, orange peel, nail holes, or other surface imperfections.

1. Provide satin finish for final coats.

L. Completed Work: Match approved samples for color, texture, and coverage. Remove, refinish, or repaint work not complying with requirements.

3.4 FIELD QUALITY CONTROL

A. The Owner reserves the right to invoke the following test procedure at any time and as often as the Owner deems necessary during the period when paint is being applied:

1. The Owner will engage the services of an independent testing agency to sample the paint material being used. Samples of material delivered to the Project will be taken, identified, sealed, and certified in the presence of the Contractor.
2. The testing agency will perform appropriate tests for the following characteristics as required by the Owner:

   a. Quantitative material analysis.
   b. Abrasion resistance.
   c. Apparent reflectivity.
   d. Flexibility.
   e. Washability.
   f. Absorption.
   g. Accelerated weathering.
   h. Dry opacity.
   i. Accelerated yellowness.
   j. Recoating.
   k. Skinning.
   l. Color retention.
   m. Alkali and mildew resistance.

3. The Owner may direct the Contractor to stop painting if test results show material being used does not comply with specified requirements. The Contractor shall remove non-complying paint from the site, pay for testing, and repaint surfaces previously coated with the rejected paint. If necessary, the Contractor may be required to remove rejected paint

from previously painted surfaces if, on repainting with specified paint, the 2 coatings are incompatible.

3.5 CLEANING

A. Cleanup: At the end of each workday, remove empty cans, rags, rubbish, and other discarded paint materials from the site.

1. After completing painting, clean glass and paint-spattered surfaces. Remove spattered paint by washing and scraping. Be careful not to scratch or damage adjacent finished surfaces.

3.6 PROTECTION

A. Protect work of other trades, whether being painted or not, against damage by painting. Correct damage by cleaning, repairing or replacing, and repainting, as approved by Architect.

B. Provide "Wet Paint" signs to protect newly painted finishes. Remove temporary protective wrappings provided by others to protect their work after completing painting operations.

1. At completion of construction activities of other trades, touch up and restore damaged or defaced painted surfaces. Comply with procedures specified in PDCA P1.

3.7 EXTERIOR PAINT SCHEDULE

A. Smooth Wood: Provide the following finish systems over smooth wood siding and other smooth, exterior wood surfaces:

1. Semigloss, Acrylic-Enamel Finish: 2 finish coats over a primer.

a. Primer: Exterior, alkyd or latex, wood primer, as recommended by the manufacturer for this substrate, applied at spreading rate recommended by the manufacturer to achieve a total dry film thickness of not less than 1.5 mils.

1) Devoe: 1102 All-Weather Exterior Alkyd House Paint Primer.
2) Glidden: UH 450 Ultra-Hide Oil/Alkyd Exterior Primer.
3) Moore: Moorwhite Primer #100.
4) PPG: 72-1 Sun-Proof Exterior House & Trim Wood Primer Flat--Latex.
5) P & L: S/D 1002 Suprime "2" Exterior Latex Wood Primer.

b. First and Second Coats: Semigloss, waterborne, exterior, acrylic enamel applied at spreading rate recommended by the manufacturer to achieve a total dry film thickness of not less than 2.4 mils.

1) Devoe: 17XX Wonder-Shield Semi-Gloss Exterior Acrylic Latex House and Trim Paint.
2) Glidden: 6600 Series Spred Ultra Exterior Gloss Latex House & Trim Paint.
3) Moore: MoorGlo Latex House & Trim Paint #096.
4) PPG: 78 Line Sun-Proof Semi-Gloss Acrylic Latex House and Trim Paint.
5) P & L: Z/F 3100 Series Aqua Royal Latex House & Trim Finish.
6) Fuller: 220-08 Exterior Latex Wood Primer.

B. Wood Trim: Provide the following finish systems over exterior wood trim:

1. Medium-Shade, Semigloss, Acrylic-Enamel Finish: 2 finish coats over a primer.

a. Primer: Exterior, acrylic-latex primer applied at spreading rate recommended by the manufacturer to achieve a total dry film thickness of not less than 1.4 mils.

1) Devoe: 1102 All-Weather Exterior Alkyd House Paint Primer.
2) Glidden: UH 790 Ultra-Hide Exterior Latex Prime Coat.
3) Moore: Moorwhite Primer #100.
4) PPG: 72-1 Sun-Proof Exterior House & Trim Wood Primer Flat--Latex.
5) P & L: S/D 1002 Suprime "2" Exterior Latex Wood Primer.

b. First and Second Coats: Semigloss, waterborne, exterior, acrylic-latex enamel applied at spreading rate recommended by the manufacturer to achieve a total dry film thickness of not less than 2.4 mils (0.061 mm).

1) Devoe: 17XX Wonder-Shield Semi-Gloss Exterior Acrylic Latex House and Trim Paint.
2) Glidden: 6600 Series Spred Ultra Exterior Gloss Latex House & Trim Paint.
3) Moore: MoorGlo Latex House & Trim Paint #096.
4) PPG: 78 Line Sun-Proof Semi-Gloss Acrylic Latex House and Trim Paint.
5) P & L: Z/F 3100 Series Aqua Royal Latex House & Trim Finish.

2. Flat Alkyd Finish: One-coat, semitransparent, exterior, alkyd, penetrating wood stain.

a. First Coat: Semitransparent, exterior, alkyd/oil wood stain applied at spreading rate recommended by the manufacturer.

1) Devoe: 90XX All-Weather Water Repellent Alkyd Semi-Transparent Stain.
2) Glidden: 9721 Line Endurance Oil Semi-Transparent Stain.
3) Moore: Moorwood Semi-Transparent Stain and Wood Preservative 081.
4) PPG: 77-860, Rez Exterior Water Repellent Semi-Transparent Oil Stain, 900 Series.
5) P & L: C 30097 STAINShield Penetrating Oil Rustic Stain.
6) S-W: Semi-Transparent Wood Preservative Stain A-14 Series.

C. Zinc-Coated Metal: Provide the following finish systems over exterior zinc-coated (galvanized) metal surfaces:

1. Low-Luster Finish: 2 finish coats over a galvanized metal primer.

a. Primer: Galvanized metal primer applied at spreading rate recommended by the manufacturer to achieve a total dry film thickness of not less than 1.2 mils.

1) Devoe: 8502/8520 Mirrolac Interior/Exterior Waterborne Flat DTM Primer and Finish.
2) Glidden: 5205 Glid-Guard Tank & Structural Primer, Red.
3) Moore: IronClad Galvanized Metal Latex Primer #155.
4) PPG: 90-709 Pitt-Tech One Pack Interior/Exterior Primer/Finish DTM Industrial Enamel.
5) P & L: Z/F 1003 Suprime "3" Interior/Exterior Latex Metal Primer.

b. First and Second Coat: Low-luster (eggshell of satin), exterior, acrylic-latex paint applied at spreading rate recommended by the manufacturer to achieve a total dry film thickness of not less than 2.8 mils.

1) Devoe: 16XX Wonder-Shield Exterior Acrylic Latex Satin House and Trim Paint.
2) Glidden: 6700 Series Spred Ultra Exterior Satin Latex House and Trim Paint.
3) Moore: MoorGard Latex House Paint #103.
4) PPG: 76 Line Sun-Proof Exterior House & Trim Acrylic Satin Latex.
5) P & L: Z/F 4200 Series Accolade Exterior Eggshell.

3.8 INTERIOR PAINT SCHEDULE

A. Gypsum Board: Provide the following finish systems over interior gypsum board surfaces:

1. Low-Luster, Acrylic-Enamel Finish: 2 finish coats over a primer.

a. Primer: Latex-based, interior primer applied at spreading rate recommended by the manufacturer to achieve a total dry film thickness of not less than 1.2 mils.

1) Devoe: 50801 Wonder-Tones Interior Vinyl Latex Primer-Sealer.
2) Glidden: 5111 Spred Ultra Latex Primer-Sealer.
3) Moore: Regal First Coat Interior Latex Primer & Underbody #216.
4) PPG: 17-10 Quick-Drying Interior Latex Primer-Sealer.
5) P & L: Z/F 1004 Suprime "4" Interior Latex Wall Primer.

b. First and Second Coats: Low-luster (eggshell or satin), acrylic-latex, interior enamel applied at spreading rate recommended by the manufacturer to achieve a total dry film thickness of not less than 2.8 mils.

1) Devoe: 34XX Wonder-Tones Interior Latex Eggshell Enamel.
2) Glidden: 4100 Series Spred Ultra Eggshell Latex Wall & Trim Paint.
3) Moore: Moore's Regal AquaVelvet #319.
4) PPG: 89 Line Manor Hall Eggshell Latex Wall and Trim Enamel.
5) P & L: Z/F 4000 Series Accolade Interior Velvet.

2. Semigloss, Epoxy-Enamel Finish (Toilet Room and Janitor Closet Walls Only): 2 finish coats over a primer with a total dry film thickness not less than 3.0 mils, excluding primer coat..

a. Primer: Latex-based, interior primer applied at spreading rate recommended by the manufacturer to achieve a total dry film thickness of not less than 1.2 mils.

1) Devoe: 50801 Wonder-Tones Interior Vinyl Latex Primer-Sealer.
2) Glidden: 5111 Spred Ultra Latex Primer-Sealer.
3) Moore: Regal First Coat Interior Latex Primer & Underbody #216.
4) PPG: 17-10 Quick-Drying Interior Latex Primer-Sealer.
5) P & L: Z/F 1001 Suprime "1" 100 Percent Acrylic Multi-Purpose Primer.

b. First and Second Coats: Semigloss, acrylic-latex, interior enamel applied at spreading rate recommended by the manufacturer to achieve a total dry film thickness of not less than 2.6 mils.

1) Devoe: 39XX Wonder-Tones Semi-Gloss Interior Latex Enamel.
2) Glidden: 8200 Series Spred Ultra Latex Semi-Gloss Enamel.
3) Moore: Moore's Regal AquaGlo Vinyl-Acrylic Latex Enamel #333.
4) PPG: 88-110 Satinhide Interior Enamel Wall & Trim Lo-Lustre Semi-Gloss Latex.
5) P & L: Z/F 4100 Series Accolade Interior Semi-Gloss.

B. Stained Woodwork: Provide the following stained finishes over new, interior woodwork:

1. Waterborne, Satin-Varnish Finish: 2 finish coats of a waterborne, clear-satin varnish over a sealer coat and a waterborne, interior wood stain. Wipe wood filler before applying stain.

a. Stain Coat: Waterborne, interior wood stain applied at spreading rate recommended by the manufacturer.

1) Devoe: 41XX WoodWorks Waterborne Interior Stain.
2) Moore: Benwood Penetrating Stain #234.
3) PPG: 77-302 Rez Interior Semi-Transparent Stain.
4) P & L: Z 197 Acrylic Latex Stain Interior.

b. Sealer Coat: Clear sanding sealer applied at spreading rate recommended by the manufacturer.

1) Devoe: 4200 WoodWorks Waterborne Quick-Dry Clear Sealer.
2) Moore: None recommended.
3) PPG: 77-30 Rez Interior Quick-Drying Sealer and Finish.
4) P & L: Z 7520 Latex Sanding Sealer.

c. First and Second Finish Coats: Waterborne, varnish finish applied at spreading rate recommended by the manufacturer.

1) Devoe: 4300 WoodWorks Waterborne Crystal Clear Finish, Satin.
2) Moore: Stays Clear Acrylic Polyurethane #423, Satin.
3) PPG: 77-49 Rez Satin Acrylic Clear Polyurethane.
4) P & L: Z 17 Acrylic Latex Varnish, Satin.

2. Wax-Polished Finish: 3 finish coats of paste wax over a sanding-sealer first coat.

C. Ferrous Metal: Provide the following finish systems over ferrous metal:

1. Semigloss, Acrylic-Enamel Finish: One finish coat over an enamel undercoater and a primer.

a. Primer: Quick-drying, rust-inhibitive, alkyd-based or epoxy-metal primer, as recommended by the manufacturer for this substrate, applied at spreading rate recommended by the manufacturer to achieve a total dry film thickness of not less than 1.5 mils.

1) Devoe: 13101 Mirrolac Rust Penetrating Metal Primer.
2) Glidden: 5207 Glid-Guard Tank & Structural Primer, White.
3) Moore: IronClad Retardo Rust-Inhibitive Paint #163.
4) PPG: 6-208 Speedhide Interior/Exterior Rust Inhibitive Steel Primer.
5) P & L: S 4551 Tech-Gard High Performance Rust Inhibitor Primer.

b. Undercoat: Alkyd, interior enamel undercoat or semigloss, acrylic-latex, interior enamel, as recommended by the manufacturer for this substrate, applied at spreading rate recommended by the manufacturer to achieve a total dry film thickness of not less than 1.3 mils.

1) Devoe: 39XX Wonder-Tones Semi-Gloss Interior Latex Enamel.
2) Glidden: 8200 Series Spred Ultra Latex Semi-Gloss Enamel.
3) Moore: Moore's Alkyd Enamel Underbody #217.
4) PPG: 6-6 Speedhide Interior Quick-Drying Enamel Undercoater.
5) P & L: Z/F 4100 Series Accolade Interior Semi-Gloss.

c. Finish Coat: Semigloss, acrylic-latex, interior enamel applied at spreading rate recommended by the manufacturer to achieve a total dry film thickness of not less than 1.3 mils.

1) Devoe: 39XX Wonder-Tones Semi-Gloss Interior Latex Enamel.
2) Glidden: 8200 Series Spred Ultra Latex Semi-Gloss Enamel.
3) Moore: Moore's Regal AquaGlo Vinyl-Acrylic Latex Enamel #333.
4) PPG: 88-110 Satinhide Interior Enamel Wall & Trim Lo-Lustre Semi-Gloss Latex.
5) P & L: Z/F 4100 Series Accolade Interior Semi-Gloss.

D. Zinc-Coated Metal: Provide the following finish systems over zinc-coated metal:

1. Semigloss, Alkyd-Enamel Finish: One finish coat over an undercoat and a primer.

a. Primer: Galvanized metal primer applied at spreading rate recommended by the manufacturer to achieve a total dry film thickness of not less than 1.2 mils.

1) Devoe: 13201 Mirrolac Galvanized Metal Primer.
2) Glidden: 5207 Glid-Guard Tank & Structural Primer, White.
3) Moore: IronClad Galvanized Metal Latex Primer #155.
4) PPG: 90-709 Pitt-Tech One Pack Interior/Exterior Primer/Finish DTM Industrial Enamel.
5) P & L: Z/F 1003 Suprime "3" Interior/Exterior Latex Metal Primer.
6) S-W: Galvite Paint B50W3.

b. Undercoat: Alkyd, interior enamel undercoat or semigloss, interior, alkyd-enamel finish coat, as recommended by the manufacturer for this substrate, applied at spreading rate recommended by the manufacturer to achieve a total dry film thickness of not less than 1.2 mils.

1) Devoe: 26XX Velour Interior Alkyd Semi-Gloss Enamel.
2) Glidden: UH 8400 Series Spred Ultra Traditional Alkyd Semi-Gloss Enamel.
3) Moore: Moore's Alkyd Enamel Underbody #217.
4) PPG: 6-6 Speedhide Interior Quick-Drying Enamel Undercoater.
5) P & L: S/D 1011 Suprime "11" Interior Alkyd Wood Primer.
6) S-W: ProMar 200 Interior Alkyd Semi-Gloss Enamel B34W200.

c. Finish Coat: Odorless, semigloss, alkyd, interior enamel applied at spreading rate recommended by the manufacturer to achieve a total dry film thickness of not less than 1.4 mils.

1) Devoe: 26XX Velour Interior Alkyd Semi-Gloss Enamel.
2) Glidden: UH 8400 Ultra Traditional Alkyd Semi-Gloss Enamel.

3) Moore: Satin Impervo #235.
4) PPG: 27 Line Wallhide Low Odor Interior Enamel Wall and Trim Semi-Gloss Oil.
5) P & L: S/D 5700 Cellu-Tone Alkyd Satin Enamel.
6) S-W: Classic 99 Interior Alkyd Semi-Gloss Enamel A-40 Series.

END OF SECTION