Table of Contents

CONTRACT TIME AND LIQUIDATED DAMAGES..... 3
NOTICE TO CONTRACTOR – PRE-BID QUESTIONS AND ANSWERS..... 4
NOTICE TO CONTRACTOR – PROTECTION OF EXISTING UTILITIES 5
NOTICE TO CONTRACTOR – FEDERAL WAGE DETERMINATIONS (Davis Bacon 8
Act) 8
NOTICE TO CONTRACTOR - PROCUREMENT OF MATERIALS..... 9
NOTICE TO CONTRACTOR – AMTRAK TEMPORARY PERMIT TO 10
ENTER AND TRAINING 10
NOTICE TO CONTRACTOR - RAILROAD SPECIFICATIONS..... 13
NOTICE TO CONTRACTOR – SAFETY AND PROTECTION OF 14
RAILROAD TRAFFIC AND PROPERTY 14
NOTICE TO CONTRACTOR - SECTION 4.06 AND M.04 MIX 29
DESIGNATION EQUIVALENCY AND PG BINDER EQUIVALENCY 29
NOTICE TO CONTRACTOR - SUPERPAVE DESIGN LEVEL INFORMATION 32
NOTICE TO CONTRACTOR – UTILITY GENERATED SCHEDULE 33
NOTICE TO CONTRACTOR – MINIMUM CONCRETE COMPRESSIVE..... 34
STRENGTH..... 34
NOTICE TO CONTRACTOR – AMTRAK ROW RESTRICTED..... 35
ACCESS 35
NOTICE TO CONTRACTOR – CONSTRUCTION OF ACCESS ROAD 36
FOR GAS MAIN RELOCATION..... 36
SECTION 1.02 – PROPOSAL REQUIREMENTS AND CONDITIONS 37
SECTION 1.07 - LEGAL RELATIONS AND RESPONSIBILITIES..... 38
1.07 - LEGAL RELATIONS AND RESPONSIBILITIES..... 39
SECTION 1.08 - PROSECUTION AND PROGRESS..... 41
SECTION 6.03 - STRUCTURAL STEEL..... 42
ON-THE-JOB TRAINING (OJT) WORKFORCE DEVELOPMENT PILOT: 50
D.B.E. SUBCONTRACTORS AND MATERIAL SUPPLIERS OR..... 54
MANUFACTURERS..... 54
ITEM #0000985A – TRACK MONITORING..... 66
ITEM #0406275A - FINE MILLING OF BITUMINOUS CONCRETE (0 TO 69
4 INCHES) 69
ITEM #0406999A - ASPHALT ADJUSTMENT COST..... 73
ITEM #0503001A - REMOVAL OF SUPERSTRUCTURE..... 76
ITEM #0514271A – PRECAST CONCRETE/STEEL COMPOSITE 78
SUPERSTRUCTURE..... 78
ITEM #0514323A – TEMPORARY POST-TENSIONING SYSTEM 85
ITEM #0521007A – ELASTOMERIC BEARINGS..... 87
ITEM #0522178A – CONSTRUCT CONCRETE KEEPER BLOCKS 90
ITEM #0601016A – PRECAST APPROACH SLAB..... 93
ITEM #0601070A – CLASS “S” CONCRETE.....101
ITEM 0601107A – HIGH EARLY STRENGTH CONCRETE.....106
ITEM #0601323A – MODIFY CONCRETE BEARING PAD.....112
ITEM #0602910A - DRILLING HOLES AND GROUTING DOWELS.....113
ITEM #0707009A - MEMBRANE WATERPROOFING (COLD LIQUID 115
ELASTOMERIC) 115
ITEM #0714050A - TEMPORARY EARTH RETAINING SYSTEM.....121
ITEM #0822005A - TEMPORARY PRECAST CONCRETE BARRIER 123
CURB (STRUCTURE) 123
ITEM #0822006A - RELOCATED TEMPORARY PRECAST CONCRETE 123
BARRIER CURB (STRUCTURE) 123
ITEM #0913068A TEMPORARY 6’ CHAIN LINK FENCE 128

ITEM #0913835A REMOVE AND RESET CHAIN LINK FENCE....129
ITEM #0913952A - PROTECTIVE FENCE (5' HIGH) 130
ITEM #0913955A – PROTECTIVE FENCE (7' HIGH) (CURVED) 130
ITEM # 0917010A – REPAIR GUIDERAIL....132
ITEM #0969062A - CONSTRUCTION FIELD OFFICE, MEDIUM 134
ITEM NO. 0971001A – MAINTENANCE AND PROTECTION OF TRAFFIC 143
ITEM #0974001A - REMOVAL OF EXISTING MASONRY....159
ITEM #1131001A - CHANGEABLE MESSAGE SIGN....162
ITEM #1131002A - REMOTE CONTROLLED CHANGEABLE MESSAGE....162
SIGN 162
ITEM #1131005A - CHANGEABLE MESSAGE SIGN WITH RADAR 162
ITEM #1131006A - REMOTE CONTROLLED CHANGEABLE MESSAGE....162
SIGN WITH RADAR....162
ITEM #1803071A - TYPE B IMPACT ATTENUATION SYSTEM....165
(TANGENTIAL) 165
PERMITS AND/OR REQUIRED PROVISIONS:....167

November 2, 2016
FEDERAL AID PROJECT NO. 1093(118)
STATE PROJECT NO. 93-200

Rehabilitation of Bridge No. 04326, Route 175
Over AMTRAK

Town of Newington
Federal Aid Project No. 1093(118)

The State of Connecticut, Department of Transportation, Standard Specifications for Roads, Bridges and Incidental Construction, Form 816, 2004, as revised by the Supplemental Specifications dated January 2016 (otherwise referred to collectively as "ConnDOT Form 816") is hereby made part of this contract, as modified by the Special Provisions contained herein. The State of Connecticut Department of Transportation's "Construction Contract Bidding and Award Manual" ("Manual"), May 14, 2010 edition or latest issue, is hereby made part of this contract. If the provisions of this Manual conflict with provisions of other Department documents (not including statutes or regulations), the provisions of the Manual will govern. The Manual is available upon request from the Transportation Manager of Contracts. The Special Provisions relate in particular to the Rehabilitation of Bridge No. 043026, Route 175 over AMTRAK in the Town of Newington.

CONTRACT TIME AND LIQUIDATED DAMAGES

In order to minimize the hazard, cost and inconvenience to the traveling public, pollution of the environment and the detriment to the commercial area, it is necessary to limit the time of construction work which interferes with traffic as specified in Article 1.08.04 of the Special Provisions

For this contract, an assessment per day for liquidated damages, at a rate of Two Thousand Seven Hundred Dollars ($2,700) per day shall be applied to each calendar day the work runs in excess of the One Hundred Eighty Three (187) allowed calendar days for the contract.

NOTICE TO CONTRACTOR – PRE-BID QUESTIONS AND ANSWERS

Questions pertaining to DOT advertised construction projects must be presented through the CTDOT Pre-Bid Q and A Website. The Department cannot guarantee that all questions will be answered prior to the bid date. **PLEASE NOTE - at 12:00 noon, the day before the bid, the subject project(s) being bid will be removed from the Q and A Website, Projects Advertised Section, at which time questions can no longer be submitted through the Q and A Website. At this time, the Q and A for those projects will be considered final, unless otherwise stated and/or the bid is postponed to a future date and time to allow for further questions and answers to be posted.**

If a question needs to be asked the day before the bid date, please contact the Contracts Unit staff and email your question to dotcontracts@ct.gov immediately.

Contractors must identify their company name, contact person, contact email address and phone number when asking a question. The email address and phone number will not be made public.

The questions and answers (if any) located on the Q and A Website are hereby made part of the bid/contract solicitation documents (located on the State Contracting Portal), and resulting contract for the subject project(s). It is the bidder's responsibility to monitor, review, and become familiar with the questions and answers, as with all bid requirements and contract documents, prior to bidding. By signing the bid proposal and resulting contract, the bidder acknowledges receipt of, and agrees to the incorporation of the final list of Q and A, into the contract document.

Contractors will not be permitted to file a future claim based on lack of receipt, or knowledge of the questions and answers associated with a project. All bidding requirements and project information, including but not limited to contract plans, specifications, addenda, Q and A, Notice to Contractors, etc., are made public on the State Contracting Portal and/or the CTDOT website.

NOTICE TO CONTRACTOR – PROTECTION OF EXISTING UTILITIES

Existing utilities shall be maintained during construction. The Contractor shall verify the location of underground and overhead utilities. Construction work within the vicinity of utilities shall be performed in accordance with current safety regulations.

Representatives of the various utility companies shall be allowed access to the work, by the Contractor.

The Contractor shall be liable for all damages or claims received or sustained by any persons, corporations or property in consequence of damage to the existing utilities, their appurtenances, or other facilities caused directly or indirectly by the operations of the Contractor.

In order to notify utility companies the number 1-800-922-4455 (Call Before You Dig), in accordance with Section 16-345 of the Regulations of the Department of Utility Control, must be called at least forty-eight (48) hours prior to the start of excavation. This notification will enable the utility companies to mark out their facilities in the field.

Contractors are cautioned that it is their responsibility to verify locations, conditions, and field dimensions of all existing features, as actual conditions may differ from the information shown on the plans or contained elsewhere in the specifications.

The Contractor shall notify the Engineer prior to the start of work and shall be responsible for all coordination with the Department. The Contractor shall allow the Engineer complete access to the work.

Any damage to any existing private and public utility, as a result of the Contractors operations, shall be repaired to the utility and Engineer's satisfaction at no cost to the State, the Town or the Utilities, including all materials, labor, etc., required to complete the repairs.

During the excavation for the proposed improvements, the cover over the existing underground Utilities will be reduced. Therefore, the Contractor shall have the location of the underground Utilities marked out prior to and following the excavation. The Contractor's attention is directed to the requirements of Article 1.07.13-Contractor's Responsibility for Adjacent Property and Services.

Prior to opening an excavation, effort shall be made to determine whether underground installations, i.e., sewer, fuel, electric line, etc., will be encountered and, if so, where such underground installations are located. When the excavation approaches the estimated location of such installation, the exact location shall be determined by careful probing or hand digging, and when it is uncovered, proper supports shall be provided for the existing installation. Utility companies shall be contacted and advised of proposed work prior to the start of actual excavation.

The Contractor shall perform all work in such a manner that will protect each Utility Company's facilities from damage. This may include excavation by hand methods as well as modified compaction methods when working close to underground Utilities. The Contractor is responsible for coordinating their work with each utility sufficiently in advance of the work so that the utility can schedule their work crews.

The Contractor shall use care when excavating in the vicinity of manholes, catch basins and pipes, which are to remain to avoid damage to these structures. As a minimum the Contractor shall notify the following Utilities representative a minimum of two (2) weeks prior to any scheduled excavation so as not to cause any delay to his anticipated progress.

All underground utilities, cable, and facilities must be located and protected before any excavating, drilling, boring/directional drilling, ground penetrating activities, or construction takes place. This includes railroad and commercial utilities, cables, duct lines, and facilities. These activities will not be performed in close proximity to the Amtrak duct lines unless monitored by on-site Amtrak Communications and Signal (C&S) department personnel. Hand digging may be required as directed by Amtrak through the on-site Amtrak C&S support personnel. Amtrak maintains the right to access all existing cables and conduits throughout construction. Amtrak also reserves the right to upgrade and install new cables and conduits in the affected area. The "One-Call" process must be followed. Be aware that Amtrak is not a part of the One-Call process; contact Amtrak Engineering to have all Amtrak underground utilities and assets located. Precautions must be taken to prevent any interruption to Amtrak's operation.

The Connecticut Light and Power Company, d.b.a. Eversource Energy – Electric Distribution

The Contractor shall contact the representative below to coordinate:

Mr. Barry C. Lashley, Msc.
Supervisor-Construction Engineering
135 New Rd., MADISON AWC
Madison, CT 06443
Phone: (203)245-5208
Email: barry.lashley@eversource.com

Southern New England Telephone Company, d.b.a. Frontier Communications of Connecticut

The Contractor shall contact the representative below to coordinate:

Mr. Raymond Puzemis
Engineering Supervisor
1441 North Colony Rd
Meriden, CT 06450-4101
Phone: (203)-238-5657
Email: raymond.w.puzemis@ftr.com

Lightower Fiber Networks

Mr. Eric Clark,
Manager Fiber Construction
1781 Highland Avenue
Cheshire, CT 06410
Phone: (203) 649-3904
Email: eclark@lightower.com

WilTel Communications, LLC d.b.a. Level (3) Communications, LLC

Mr. Mike Weaver
Project Manager, OSP Relocations
1025 Eldorado Boulevard - 43C-317
Broomfield, CO 80021
Phone: 919-710-8891
Email: mike.weaver@level3.com

CoxCom, Inc.

Mr. Thomas Derway
Capital/Utility Coordinator
801 Parker Street
Manchester, CT 06045
Phone: (860) 432-5040
Email: thomas.derway@cox.com

Connecticut Natural Gas Corporation

Mr. Vasant C. Patel,
Manager - Utility Coordination
76 Meadow Street, 1st Floor
East Hartford, CT 06108
Phone: (860) 727-3114
Email: vpatel@ctgcorp.com

NOTICE TO CONTRACTOR – FEDERAL WAGE DETERMINATIONS (Davis Bacon Act)

The following Federal Wage Determinations are applicable to this Federal- Aid contract and are hereby incorporated by reference. During the bid advertisement period, it is the bidder's responsibility to obtain the latest Federal wage rates from the US Department of Labor website, as may be revised 10 days prior to bid opening. Any revisions posted 10 days prior to the bid opening shall be the wage determinations assigned to this contract.

Check Applicable WD# (DOT Use Only)	WD#	Construction Type	Counties
X	CT1	Highway	Fairfield, Litchfield, Middlesex, New Haven, Tolland, Windham
	CT2	Highway	New London
	CT3	Highway	Hartford
	CT5	Heavy Dredging (Hopper Dredging)	Fairfield, Middlesex, New Haven, New London
	CT6	Heavy Dredging	Statewide
	CT13	Heavy	Fairfield
	CT14	Heavy	Hartford
	CT15	Heavy	Middlesex, Tolland
	CT16	Heavy	New Haven
	CT17	Heavy	New London
	CT26	Heavy	Litchfield, Windham
	CT18	Building	Litchfield
	CT19	Building	Windham
	CT20	Building	Fairfield
	CT21	Building	Hartford
	CT22	Building	Middlesex
	CT23	Building	New Haven
	CT24	Building	New London
	CT25	Building	Tolland
	CT4	Residential	Litchfield, Windham
	CT7	Residential	Fairfield
	CT8	Residential	Hartford
	CT9	Residential	Middlesex
	CT10	Residential	New Haven
	CT11	Residential	New London
	CT12	Residential	Tolland

The Federal wage rates (Davis-Bacon Act) applicable to this Contract shall be the Federal wage rates that are current on the US Department of Labor website (http://www.wdol.gov/dba.aspx) as may be revised 10 days prior to bid opening. The Department will no longer physically include revised Federal wage rates in the bid documents or as part of addenda documents. These applicable Federal wage rates will be incorporated in the final contract document executed by both parties.

If a conflict exists between the Federal and State wage rates, the higher rate shall govern.

To obtain the latest Federal wage rates, go to the US Department of Labor website (link above). Under Davis-Bacon Act, choose "Selecting DBA WDs" and follow the instruction to search the latest wage rates for the State, County and Construction Type.

NOTICE TO CONTRACTOR - PROCUREMENT OF MATERIALS

Upon award, the Contractor shall proceed with shop drawings, working drawings, procurement of materials, and all other submittals required to complete the work in accordance with the contract documents.

NOTICE TO CONTRACTOR – AMTRAK TEMPORARY PERMIT TO ENTER AND TRAINING

Contractors who require access to railroad property must submit a letter requesting a Temporary Permit to Enter Upon Property. The letter should include the contact name and mailing address of the prime contractor responsible for all work, and outline the location, nature, scope and estimated duration of work. Refer to the attached "Temporary Permit to Enter Upon Property" requirement list. If any substructure work is required, the letter should clearly specify whether the work is geotechnical or environmental in nature.

Prior to any work on or access to Amtrak ROW, the contractor must first execute Amtrak's then current Temporary Permit to Enter Upon Property. After Amtrak receives a fully executed permit, payment for applicable fees, approval of the proposed work plans and/or access requirements, and verify that all insurance requirements have been met, the appropriate Department will be notified that the work may proceed.

Please note that all contractor employees who will work on railroad property are required to complete Amtrak's Contractor Safety Orientation Training, see attached, prior to entry on railroad property. The contractor must coordinate all access with Amtrak's Division representative.

Due to heavy volume of requests for Temporary Permits to Enter Upon Amtrak Property, please allow up to 30 business days processing time for initial Permit requests.

Amtrak
Engineering Construction
4th Floor - South Tower
30th Street Station (Mail Box 64)
Philadelphia, PA 19104

Temporary Permits to Enter Upon Amtrak Property (PTEs)

Requests for Temporary Permits to Enter Upon Amtrak Property (PTEs) must be submitted to Amtrak in writing and include the following information:

1. Name of company requesting the permit (include address and telephone number)
2. Who's attention the permit should be addressed to
3. Permittee's e-mail address
4. Exact location of work (including railroad milepost, if known)
5. Specific work activity being performed on railroad property (please provide dollar value of the contract if work being performed is other than surveys or bridge inspections)
6. Projected duration of work being performed on railroad property
7. Contact, phone and address where invoices should be sent for payment by Permittee.

Note: ***Temporary Permits for performing any environmental or geotechnical tests or studies (e.g., air, soil or water sampling) may be issued subsequent to completion of Amtrak's environmental review and approval process. Requests are reviewed on a case-by-case basis. Depending on the site specific circumstances, a separate Site Access Agreement that addresses environmental liability issues may be required prior to any Temporary Permit.***

All PTE Requests must be submitted to the Amtrak Engineering Construction Department by fax, e-mail or mail as noted below:

- Faxed to (215) 349-3550 or MCGRATM@AMTRAK.COM
- Email to mcgratm@amtrak.com
- Mailed to the following address:

  Director I&C Projects
  National Railroad Passenger Corporation
  30th Street Station (Mail Box 64)
  Philadelphia, PA 19104

Due to the heavy volume of requests for Temporary Permits to Enter Upon Amtrak Property, the processing time for initial Permit requests is approximately 30 business days.

Rev. 10/22/08

AMTRAK
HR – Employee Development
30th and Market Streets – 3 North – Box 1
Philadelphia, PA 19104
Fax Number 215-349-3731

Contractor Orientation Training Request

This is in response to your request for Amtrak's Contractor Orientation Training. *Note: Our training delivery has changed*. Starting October 1, 2012, Instructor Led classroom training will *no longer be offered* and has been replaced with a computer based training program that is available 24 hours / 7 days per week. Offered at a cost of $18.00 per person, this training can be completed at www.amtrakcontractor.com and requires participants to register on the website before accessing the course. Participants completing this course are required to be able to *Read, Comprehend and Demonstrate in English their understanding of the materials presented, as well as all the safety instructions, briefings and warnings.* Before taking this course, participants will be required to provide a current photo and have the capability of uploading the photo electronically. At the end of this course, participants are required to pass a comprehensive test to receive a temporary certificate that is valid for three weeks. A Photo ID card, which is valid for one calendar year from the date of issue, will be mailed to the participant. Each participant will be given three (3) opportunities to pass the test. If unable to pass on the 3rd attempt, the participant will be unable to retake the test for 30 days.

The safety of Amtrak's passengers and all employees working on the property (Amtrak and Contractor personnel) remains our highest priority. For your protection, Amtrak requires that your employees comply with all safety regulations ("Specifications Regarding Safety and Protection of the Railroad Traffic Property").

All contractors must notify the Amtrak Project Manager or Engineer assigned to your project before entering onto railroad property and before coming within twenty-five (25 feet) of the centerline of the track or energized wire. Amtrak's Project Manager or Engineer assigned to your project will assist you with obtaining a temporary "Permit to Enter upon Property" and will arrange for protection if needed. Safety violations will result in the immediate suspension of work within the railroad's property limits.

Thank You

HR - Employee Development

Rev.9/28/12

NOTICE TO CONTRACTOR - RAILROAD SPECIFICATIONS

The contractor is hereby notified that all railroad specifications contained elsewhere herein shall be made a part of this contract, and that the contractor shall be bound to comply with all requirements of such specifications. The requirements and conditions set forth in the subject specifications shall be binding on the contractor just as any other specification would be.

NOTICE TO CONTRACTOR – SAFETY AND PROTECTION OF RAILROAD TRAFFIC AND PROPERTY

The contractor is hereby notified that the following Amtrak Specification shall be made a part of this contract, and that the contractor shall be bound to comply with all requirements of this specification. The requirements and conditions set forth in the subject specification shall be binding on the contractor just as any other specification would be.

SECTION 01141A – SAFETY AND PROTECTION OF RAILROAD TRAFFIC AND PROPERTY

PART 1 - GENERAL

1.1 SCOPE

A. This specification describes the safety procedures and protection provisions for Contractors and Permittees entering and working upon railroad property.

B. Use of this specification is as required by Amtrak, as described in Amtrak Engineering Practice EP3014.

1.2 RELATED DOCUMENTS

A. Drawings and general provisions of the Contract, including General and Supplementary Conditions and other Division 1 Specification Sections, apply to this Section.

1.3 DEFINITIONS

A. CHIEF ENGINEER: Amtrak Chief Engineer

B. RAILROAD: National Railroad Passenger Corporation (Amtrak), and/or the duly authorized representative

C. ENGINEERING PRACTICE: Amtrak Engineering Practices establish a system of uniform practices, notices and instructions for the Amtrak Engineering Department, providing current, permanent and temporary, departmental procedures and policies.

PART 2 - PRODUCTS (Not Used)

PART 3 - EXECUTION

3.1 PRE-ENTRY MEETING

A. Before entry of Permittee and/or Contractors onto Railroad's property, a pre-entry meeting shall be held at which time Permittee and/or Contractors shall submit for written approval of the Chief Engineer, plans, computations and a detailed description of proposed methods for accomplishing the work, including methods for protecting Railroad's traffic. Any such written approval shall not relieve Permittee and/or Contractor of their complete responsibility for the adequacy and safety of their operations.

3.2 RULES, REGULATIONS AND REQUIREMENTS

A. Railroad traffic shall be maintained at all times with safety and continuity, and Permittee and/or Contractors shall conduct their operations in compliance with all rules, regulations, and requirements of Railroad (including these Specifications) with respect to any work performed on, over, under, within or adjacent to Railroad's property. Permittee and/or Contractors shall be responsible for acquainting themselves with such rules, regulations and requirements. Any violation of Railroads safety rules, regulations, or requirements shall be grounds for the immediate suspension of the Permittee and/or Contractor work, and the re-training of all personnel, at the Permittee's expense.

3.3 MAINTENANCE OF SAFE CONDITIONS

A. If tracks or other property of Railroad are endangered during the work, Permittee and/or Contractor shall immediately take such steps as may be directed by Railroad to restore safe conditions, and upon failure of Permittee and/or Contractor to immediately carry out such direction, Railroad may take whatever steps are reasonably necessary to restore safe conditions. All costs and expenses of restoring safe conditions, and of repairing any damage to Railroad's trains, tracks, right-of-way or other property caused by the operations of Permittee and/or Contractors, shall be paid by Permittee.

3.4 PROTECTION IN GENERAL

A. Permittee and/or Contractors shall consult with the Chief Engineer to determine the type and extent of protection required to insure safety and continuity of railroad traffic. Any Inspectors, Track Foremen, Track Watchmen, Flagman, Signalmen, Electric Traction Linemen, or other employees deemed necessary by Railroad, at its sole discretion, for protective services shall be obtained from Railroad by Permittee and/or Contractors. The cost of same shall be paid directly to Railroad by Permittee. The provision of such employees by Railroad, and any other precautionary measures taken by Railroad, shall not relieve Permittee and/or Contractors from their complete responsibility for the adequacy and safety of their operations.

3.5 PROTECTION FOR WORK NEAR ELECTRIFIED TRACK OR WIRE

A. Whenever work is performed in the vicinity of electrified tracks and/or high voltage wires, particular care must be exercised, and Railroad's requirements regarding clearance to be maintained between equipment and tracks and/or energized wires, and otherwise regarding work in the vicinity of electrified tracks, must be strictly observed. No employees or equipment will be permitted to work near overhead wires, except when protected by a Class A employee of Railroad. **Permittee and/or Contractors must supply an adequate length of grounding cable (4/0 copper with approved clamps) for each piece of equipment working near or adjacent to any overhead wire**.

3.6 FOULING OF TRACK OR WIRE

A. No work will be permitted within twenty-five (25) feet of the centerline of track or the energized wire or have potential of getting within twenty-five (25) feet of track wire without the

approval of the Chief Engineer's representative. Permittee and/or Contractors shall conduct their work so that no part of any equipment or material shall foul an active track or overhead wire without the written permission of the Chief Engineer's representative. When Permittee and/or Contractors desire to foul an active track, they must provide the Chief Engineer's representative with their site-specific work plan a minimum of twenty-one (21) working days in advance, so that, if approved, arrangements may be made for proper protection of Railroad. Any equipment shall be considered to be fouling a track or overhead wire when located (a) within fifteen (15) feet from the centerline of the track or within fifteen (15) feet from the wire, or (b) in such a position that failure of same, with or without a load, would bring it within fifteen (15) feet from the centerline of the track or within fifteen (15) feet from the wire and requires the presence of the proper Railroad protection personnel.

B. If acceptable to the Chief Engineer's representative, a safety barrier (approved temporary fence or barricade) may be installed at fifteen (15) feet from centerline of track or overhead wire to afford the Permittee and/or Contractor with a work area that is not considered fouling. Nevertheless, protection personnel may be required at the discretion of the Chief Engineer's representative.

3.7 TRACK OUTAGES

A. Permittee and/or Contractors shall verify the time and schedule of track outages from Railroad before scheduling any of their work on, over, under, within, or adjacent to Railroad's right-of-way. Railroad does not guarantee the availability of any track outage at any particular time. Permittee and/or Contractors shall schedule all work to be performed in such a manner as not to interfere with Railroad operations. Permittee and/or Contractors shall use all necessary care and precaution to avoid accidents, delay or interference with Railroad's trains or other property.

3.8 DEMOLITION

A. During any demolition, the Contractor must provide horizontal and vertical shields, designed by a Professional Engineer registered in the state in which the work takes place. These shields shall be designed in accordance with the Railroad's specifications and approved by the Railroad, so as to prevent any debris from falling onto the Railroad's right-of-way or other property. A grounded temporary vertical protective barrier must be provided if an existing vertical protective barrier is removed during demolition. In addition, if any openings are left in an existing bridge deck, a protective fence must be erected at both ends of the bridge to prohibit unauthorized persons from entering onto the bridge.

B. Ballasted track structure shall be kept free of all construction and demolition debris. Geo-textiles or canvas shall be placed over the track ties and ballast to keep the ballast clean.

3.9 EQUIPMENT CONDITION

A. All equipment to be used in the vicinity of operating tracks shall be in "certified" first-class condition so as to prevent failures that might cause delay to trains or damage to Railroad's property. No equipment shall be placed or put into operation near or adjacent to operating tracks without first obtaining permission from the Chief Engineer's representative. **Under no**

circumstances shall any equipment or materials be placed or stored within twenty-five (25) feet from the centerline of an outside track, except as approved by the Site Specific Safety Work Plan. To insure compliance with this requirement, Permittee and/or Contractors **must establish a twenty-five (25) foot foul line prior to the start of work** by either driving stakes, taping off or erecting a temporary fence, or providing an alternate method as approved by the Chief Engineer's representative. Permittee and/or Contractors will be issued warning stickers which must be placed in the operating cabs of all equipment as a constant reminder of the twenty-five (25) foot clearance envelope.

3.10 STORAGE OF MATERIALS AND EQUIPMENT

A. No material or equipment shall be stored on Railroad's property without first having obtained permission from the Chief Engineer. Any such storage will be on the condition that Railroad will not be liable for loss of or damage to such materials or equipment from any cause.

B. If permission is granted for the storage of compressed gas cylinders on Railroad property, they shall be stored a minimum of 25 feet from the nearest track in an approved lockable enclosure. The enclosure shall be locked when the Permittee and/or Contractor is not on the project site.

3.11 CONDITION OF RAILROAD'S PROPERTY

A. Permittee and/or Contractors shall keep Railroad's property clear of all refuse and debris from its operations. Upon completion of the work, Permittee and/or Contractors shall remove from Railroad's property all machinery, equipment, surplus materials, falsework, rubbish, temporary structures, and other property of the Permittee and/or Contractors and shall leave Railroad's property in a condition satisfactory to the Chief Engineer.

3.12 SAFETY TRAINING

A. All individuals, including representatives and employees of Permittee and/or Contractor, before entering onto Railroad's property and before coming within twenty-five (25) feet of the centerline of the track or energized wire must first attend Railroad's Contractor Orientation Computer Based Training Class. The Contractor Orientation Class will be provided electronically at **www.amtrakcontractor.com**. Upon successful completion of the course and test, the individual taking the course will receive a temporary certificate without a photo that is valid for three weeks. The individual must upload a photo of himself/herself that will be embedded in the permanent ID card. The photo ID will be mailed to the individual's home address and must be worn/displayed while on Railroad property. Training is valid for one calendar year. All costs of complying with Railroad's safety training shall be at the sole expense of Permittee and/or Contractor. The Permittee and/or Contractor shall appoint a qualified person as its Safety Representative. The Safety Representative shall continuously ensure that all individuals comply with Railroad's safety requirements. All safety training records must be maintained with the Permittee's and/or Contractor's site specific work plan.

3.13 NO CHARGES TO RAILROAD

A. It is expressly understood that neither these Specifications, nor any document to which they are attached, include any work for which Railroad is to be billed by Permittee and/or Contractors, unless Railroad gives a written request that such work be performed at Railroad's expense.

END OF SECTION 01141A

SECTION 01142A – SUBMISSION DOCUMENTATION REQUIRED FOR AMTRAK REVIEW AND APPROVAL OF PLANS FOR BRIDGE ERECTION, DEMOLITION AND OTHER CRANE/ HOISTING OPERATIONS OVER RAILROAD RIGHT-OF-WAY

PART 1 - GENERAL

1.1 SCOPE

A. Amtrak requires that a site-specific work plan for accomplishing hoisting operations be prepared for every applicable project, and for each type of lift on a project.
   1. The plan shall demonstrate adherence to Amtrak safety rules.
   2. The plan shall demonstrate constructibility.
   3. The plan shall minimize impact to rail operations.
   4. The approved plan will provide the basis for field inspection/ verification of the actual work.

B. Preparation, review and approval of the Crane/ Hoisting site-specific work plan does not relieve the Contractor from meeting other Amtrak requirements for adequate planning and documentation of proposed work procedures within the Right-of-Way of the railroad..

C. Current Amtrak safety rules shall be adhered to in every respect.

D. Use of this specification is as required by Amtrak, as described in Amtrak Engineering Practice EP3014.

1.2 RELATED DOCUMENTS

A. Drawings and general provisions of the Contract, including General and Supplementary Conditions and other Division 1 Specification Sections, apply to this Section.

1.3 DEFINITIONS

A. CHIEF ENGINEER: Amtrak Vice President, Chief Engineer

B. RAILROAD: National Railroad Passenger Corporation (Amtrak), and/or the duly authorized representative

C. ENGINEERING PRACTICE: Amtrak Engineering Practices establish a system of uniform practices, notices and instructions for the Amtrak Engineering Department, providing current, permanent and temporary, departmental procedures and policies.

1.4 SUBMISSION REQUIREMENTS

A. Unless otherwise directed in the Contract, the Contractor shall submit five sets of plans and calculations to the authorized representative of the Chief Engineer, Structures, whose name and address will be provided at the project pre-construction meeting.

B. Submitted calculations and plans shall be signed and sealed by a Professional Engineer, registered in the State in which the work will be performed.

C. The Contractor shall revise and resubmit plans and calculations as many times as necessary, until a complete and correct site-specific work plan for crane/ hoisting operations has been approved.

PART 2 - PRODUCTS (Not Used)

PART 3 - EXECUTION

3.1 THE CONTRACTOR SHALL PROVIDE, AT A MINIMUM, THE FOLLOWING INFORMATION FOR REVIEW AND APPROVAL BY AMTRAK ENGINEERING STRUCTURES:

A. Plan view showing location(s) of cranes, operating radii, with delivery and/or disposal locations shown. Provide all necessary dimensions for locating the elements of the plan.

B. Plans and computations showing the weight of the pick.

C. Crane rating sheets, demonstrating that cranes are adequate for 150% of the calculated pick weight. That is, the cranes shall be capable of picking 150% of the load, while maintaining normal, recommended factors of safety. The adequacy of the crane for the proposed pick shall be determined by using the manufacturer's published crane rating chart and not the maximum crane capacity. Crane and boom nomenclature is to be indicated.

D. Calculations demonstrating that slings, shackles, lifting beams, etc. are adequate for 150% of the calculated pick weight.

E. Location plan showing obstructions, indicating that the proposed swing is possible. "Walking" of load using two cranes will not be permitted. Rather, multiple picks and repositioning of the crane may be permitted to get the load to the needed location for the final pick, if necessary.

F. Data sheet listing types and sizes of slings and other connecting equipment. Include copies of catalog cuts for specialized equipment. Detail attachment methods on the plans.

G. A complete procedure, indicating the order of lifts and any repositioning or re-hitching of the crane or cranes.

H. Temporary support of any components or intermediate stages, as may be required.

I. A time schedule of the various stages, as well as a schedule for the entire lifting process.

END OF SECTION 01142A

SECTION 01520A – REQUIREMENTS FOR TEMPORARY PROTECTION SHIELDS FOR DEMOLITION AND CONSTRUCTION OF OVERHEAD BRIDGES AND OTHER STRUCTURES

PART 1 - GENERAL

1.1 SCOPE

A. This engineering practice describes items to be included in the design and construction of temporary protection shields for construction overhead and near to Amtrak tracks.

B. Use of this specification is as required by Amtrak, as described in Amtrak Engineering Practice EP3014.

1.2 RELATED DOCUMENTS

A. Drawings and general provisions of the Contract, including General and Supplementary Conditions and other Division 1 Specification Sections, apply to this Section.

1.3 DEFINITIONS

A. CHIEF ENGINEER: Amtrak Vice President, Chief Engineer

B. RAILROAD: National Railroad Passenger Corporation (Amtrak), and/or the duly authorized representative

C. ENGINEERING PRACTICE: Amtrak Engineering Practices establish a system of uniform practices, notices and instructions for the Amtrak Engineering Department, providing current, permanent and temporary, departmental procedures and policies.

1.4 SUBMISSION REQUIREMENTS

A. Unless otherwise directed in the Contract, the Contractor shall submit five sets of plans and calculations to the authorized representative of the Chief Engineer, Structures, whose name and address will be provided at the project pre-construction meeting.

B. Submitted calculations and plans shall be signed and sealed by a Professional Engineer, registered in the State in which the work will be performed.

C. The Contractor shall revise and resubmit plans and calculations as many times as necessary, until a complete and correct site-specific work plan for crane/ hoisting operations has been approved.

PART 2 - PRODUCTS (Not Used)

PART 3 - EXECUTION

3.1 CONTRACTORS WORKING ON OVERHEAD OR NEARBY DEMOLITION AND/OR CONSTRUCTION ADJACENT TO AMTRAK TRACKS, SHALL CONFORM TO THE FOLLOWING

DESIGN AND CONSTRUCTION REQUIREMENTS FOR TEMPORARY PROTECTION SHIELDING:

A. The Contractor shall maintain a specified level of protection to railroad facilities, during demolition and construction activities that occur overhead and nearby Amtrak tracks, as shown on the Contract Plans, as detailed in the Contract Specifications, and as described below.

B. Prior to the start of construction, the Contractor shall submit to Amtrak for review and approval, detailed, site specific plans for temporary protection shields. The plans will be reviewed as to the methods of erection, and as to whether or not the proposed installation will provide the required level of protection. No construction shall proceed until the Contractor has received written approval of the Contractor's complete, site specific plans, from Amtrak.

C. The Contractor shall design the protection shields to conform to all applicable and governing federal, state and local laws and regulations.

D. Drawings for the proposed temporary protection shields shall be signed and sealed by a Licensed Professional Engineer. Complete design calculations, clearly referenced to the drawings, and easy to review, shall be provided with submission of drawings.

E. Protection shields shall be designed for the following, minimum load and size criteria.
   1. The horizontal shield design liveload on horizontal surfaces shall be the greater of a minimum of 100 pounds per square foot (psf) [5000 Pascals] or the anticipated liveload to be produced by the Contractor's anticipated operations. When determining the appropriate design live load, the designer shall consider factors such as the physical capacity of proposed debris-catching platforms to retain materials, and the type of equipment the platforms might support. Positive means of demolition and construction controls shall be provided to assure that debris that may collect on the shield will not exceed the design live load. The horizontal protection shield, in plan view, shall cover no less than the area directly over the tracks plus ten feet minimum beyond the centerline of the outermost tracks.
   2. The vertical shield shall be designed to carry a minimum 30 psf [1500 Pascals] allowance for wind load. The vertical shield shall extend a minimum of 6'-6" [1950 millimeters] above the top of the adjacent surface, such as curb or sidewalk. Anti-climb wings shall be installed at each end, as necessary, to restrict access to the railroad property.

F. The vertical and horizontal clearance envelopes required for maintenance of railroad operations, shall be indicated on the site specific work plans. These clearances are subject to review and approval by Amtrak. If applicable, both temporary and permanent envelopes shall be indicated on the plans. The temporary protection shields shall be installed outside the limits of these minimum vertical and horizontal clearances shown on the site specific work plans.

G. In electrified territory, temporary protection shields shall be bonded and grounded.

H. Temporary protection shields shall be designed and constructed to prevent dust, debris, concrete, formwork, paint, tools, or anything else from falling onto the railroad property below.

I. The temporary protection shields shall be attached to the structure in accordance with site specific work plans submitted by the Contractor and approved by Amtrak. Drilling in structural members and welding will generally not be permitted in members that are scheduled to remain in place in the reconstructed structure. For existing members scheduled for demolition or for later reconstruction, any proposed attachment shall be designed with consideration of potential existing, deteriorated conditions.

J. The Contractor shall provide the Amtrak on-site representative, for review and approval prior to any construction activity in the effected area, a proposed construction schedule for the installation, maintenance and removal of the temporary protection shields.

K. The temporary protection shields shall be installed prior to the start of any other work over the railroad in the effected areas. No construction shall proceed until the Amtrak on-site representative reviews and approves the Contractor's installed protection. Before proceeding with the work, Amtrak must be satisfied, in its sole judgment, that sufficient protection has been provided to proceed with the work.

L. The Contractor shall install and remove temporary protection shields only when an Amtrak representative is on-site.

M. The Contractor shall not install or remove temporary protection shields during train operations.

N. Temporary protection shields shall remain in place for the duration of construction activities over and nearby the railroad in the effected areas. The Contractor may remove temporary construction only after approved by Amtrak on-site representatives.

O. Where site specific conditions impose insurmountable restrictions to the design of temporary construction conforming to the limitations listed above, the design of temporary construction shall be developed in close coordination with Amtrak design review personnel. The Chief Engineer, Structures shall provide final approval of temporary construction that does not conform to the above limitations.

END OF SECTION 01520A

SECTION 02261A – REQUIREMENTS FOR TEMPORARY SHEETING AND SHORING TO SUPPORT AMTRAK TRACKS

PART 1 - GENERAL

1.1 SCOPE

A. This engineering practice describes items to be included in the design and construction of temporary sheeting and shoring construction adjacent and proximate to Amtrak tracks.

B. Use of this specification is as required by Amtrak, as described in Amtrak Engineering Practice EP3014.

1.2 RELATED DOCUMENTS

A. Drawings and general provisions of the Contract, including General and Supplementary Conditions and other Division 1 Specification Sections, apply to this Section.

1.3 DEFINITIONS

A. CHIEF ENGINEER: Amtrak Vice President, Chief Engineer

B. RAILROAD: National Railroad Passenger Corporation (Amtrak), and/or the duly authorized representative

C. ENGINEERING PRACTICE: Amtrak Engineering Practices establish a system of uniform practices, notices and instructions for the Amtrak Engineering Department, providing current, permanent and temporary, departmental procedures and policies.

1.4 SUBMISSION REQUIREMENTS

A. Unless otherwise directed in the Contract, the Contractor shall submit five sets of plans and calculations to the authorized representative of the Chief Engineer, Structures, whose name and address will be provided at the project pre-construction meeting.

B. Submitted calculations and plans shall be signed and sealed by a Professional Engineer, registered in the State in which the work will be performed.

C. The Contractor shall revise and resubmit plans and calculations as many times as necessary, until a complete and correct site-specific work plan for crane/ hoisting operations has been approved.

PART 2 - PRODUCTS (Not Used)

PART 3 - EXECUTION

3.1 CONTRACTORS INSTALLING TEMPORARY CONSTRUCTION SHEETING AND SHORING TO SUPPORT AMTRAK TRACKS SHALL CONFORM TO THE FOLLOWING:

A. Footings for all piers, columns, walls, or other facilities shall be located and designed so that any temporary sheeting and shoring for support of adjacent track or tracks during construction, will not be closer than toe of ballast slope. The dimension from gage of rail to toe of ballast, along tangent track, is 7'-5"; see dimensions on Track standard plans for curved track dimensions.

B. USE OF SHEETING: When support of track or tracks is necessary during construction of the above-mentioned facilities, interlocking steel sheeting, adequately braced and designed to carry Cooper E80 live-load plus 50 percent impact allowance is required. Soldier piles and lagging will be permitted for track support ONLY when required penetration of steel sheet piling cannot be obtained, due to site-specific conditions that make steel sheet piling placement impracticable, in the opinion of the authorized, Amtrak design review engineer.
   1. For usual soil conditions and limited excavations, sheeting is required when the near-track excavation extends beneath or nearer to the track than the Theoretical Railroad Embankment Line. The Theoretical Railroad Embankment Line is defined as a line that starts at grade, ten foot from the centerline of the outer track, and extends downward, away from the track, at a slope of 1-1/2 horizontal to one vertical.
   2. For special soil conditions, such as soft organic soils and rock conditions, and for unusual excavation conditions, temporary supports for excavations may be necessary even when the limits fall beyond the Theoretical Railroad Embankment Line, requiring site specific analysis by a professional, geotechnical engineer.
   3. See Sketch SK-1, "Normal Requirements for Sheet Piling Adjacent to Tracks".

C. Exploratory trenches, three feet deep and 15 inches wide in the form of an "H", with outside dimensions matching the proposed outside dimensions of sheeting, shall be hand dug, prior to placing and driving the sheeting, in any area where railroad or utility underground installations are known or suspected. These trenches are for exploratory purposes only, and shall be backfilled and immediately compacted, in layers. This work shall be performed only in the presence of a railroad inspector.

D. Absolute use of track is required while driving sheeting adjacent to running track. Track usage shall be prearranged per standard procedures, through the Amtrak project representative.

E. Cavities adjacent to sheet piling, created by pile driving, shall be filled with sand, and any disturbed ballast shall be restored and tamped immediately.

F. Sheet piling cutoffs
   1. During construction, sheeting shall be cut off at an elevation no higher than the top of tie.
   2. At the completion of construction activities involving the use of sheet piling, sheet piling may be pulled if there will be no adverse impact to the railroad track support bed, as determined by the Amtrak site engineer. This will generally be permitted when both of these conditions are met:
      a. the sheeting face is at least ten feet distant from the centerline of track, and
      b. the bottom of the excavation that the sheeting supported prior to backfilling, does not fall within an assumed influence zone under the tracks. The assumed influence

zone is defined as the area, as seen in cross-sectional view, falling beneath the Theoretical Underground Track Disturbance Line. This line is defined as a line that starts at the end and bottom of the ties, and extends from the track outward and downward at a one-to-one (45-degree) slope.

3. Sheet piling that is to be left in-place, shall be cut off below the ground line
   a. at least eighteen inches below final ground line at the sheeting, and
   b. no higher than 24 inches below the elevation of the bottom of the nearest ties
4. See Sketch SK-1, "Normal Requirements for Sheet Piling Adjacent to Tracks".

G. The excavation adjacent to the track shall be covered, ramped and protected by handrails, barricades and warning lights, as required by applicable safety regulations, and as directed by Amtrak.

H. Final backfilling of excavation shall conform to project specifications.

I. The Contractor shall provide Amtrak with a detailed schedule of proposed construction operations, detailing each step of the proposed temporary construction operations in proximity to Amtrak tracks, so that Amtrak may review and approve the proposed operations, and may properly inspect and monitor operations.

J. Drawings for the proposed temporary sheeting and shoring shall be signed and sealed by a Licensed Professional Engineer. Complete design calculations, clearly referenced to the drawings, and easy to review, shall be provided with submission of drawings.

K. Where site specific conditions impose insurmountable restrictions to the design of temporary construction conforming to the limitations listed above, the design of temporary construction shall be developed in close coordination with Amtrak design review personnel. The Chief Engineer, Structures shall provide final approval of temporary construction that does not conform to the above limitations.
   1. When Amtrak grants approval for sheeting closer than standard minimum clearances, the Contractor shall develop a survey plan, if not already required by the project, for the adjacent tracks, to be conducted prior to, during, and after the temporary sheeting construction operations. If settlement is detected, construction operations shall be suspended until the track has been returned to its initial condition, and stabilized, as determined by the Amtrak project site representative.
   2. The Contractor shall stockpile ten (10) tons of approved ballast at the project site, and maintain that amount in ready reserve, to allow for the possible need to restore track profile.

L. Particular care shall be taken in the planning, design and execution of temporary construction, as relates to railroad slope protection and drainage facilities. Erosion and sediment control best management practices shall be designed and employed, as approved by Amtrak. Any unintended disruption to railroad drainage facilities, caused by the temporary construction, shall be promptly remedied, as directed by the Engineer, solely at the Contractor's cost.

M. The following Information Sketch is attached:

   1. Figure No. SK-1: Normal Requirements for Sheet Piling Adjacent to Track

END OF SECTION 02261A

NOTICE TO CONTRACTOR - UTILITY SPECIFICATIONS

The contractor is hereby notified that all utility specifications contained elsewhere herein shall be made a part of this contract, and that the contractor shall be bound to comply with all requirements of such specifications. The requirements and conditions set forth in the subject specifications shall be binding on the contractor just as any other specification would be.

NOTICE TO CONTRACTOR - SECTION 4.06 AND M.04 MIX DESIGNATION EQUIVALENCY AND PG BINDER EQUIVALENCY

Sections 4.06 and M.04 have been replaced in their entirety with the Special Provisions included as part of this contract. These Special Provisions reflect changes in mix designations for various types of hot-mix asphalt (HMA) and include the removal of mixes designed and governed by the Marshall Mix Design method. The following table is to be used to associate mix designations noted on the plans with those in the contract specifications and related documents. Mix designations on each row are equivalent and refer to a single mix, which shall be subject to the requirements of the Section 4.06 and M.04 Special Provisions for the Official Mix Designation in the leftmost column of the corresponding row in the table.

Mix Designation Equivalency Table

Official Mix Designation	Equivalent Mix Designation (a)	Equivalent Mix Designation (b)
(c)	Superpave 1.5 inch	Superpave 37.5 mm
HMA S1	Superpave 1.0 inch	Superpave 25.0 mm
HMA S0.5	Superpave 0.5 inch	Superpave 12.5 mm
HMA S0.375	Superpave 0.375 inch	Superpave 9.5 mm
HMA S0.25	Superpave 0.25 inch	Superpave 6.25 mm
(c)	Superpave #4	Superpave #4
HMA S0.5 (d)	Bituminous Concrete Class 1 **(e)**	Bituminous Concrete Class 1 **(e)**
HMA S0.375 (d)	Bituminous Concrete Class 2 where it is specified in lifts 1.25 or thicker **(e)**	Bituminous Concrete Class 2 where it is specified in lifts 1.25 or thicker **(e)**
HMA S0.25 (d)	Bituminous Concrete Class 2 where it is specified in lifts 1.0 inches to less than 1.25 inches **(e)**; Bituminous Concrete Class 12 **(e)**	Bituminous Concrete Class 2 where it is specified in lifts 1.0 inches to less than 1.25 inches **(e)**; Bituminous Concrete Class 12 **(e)**
HMA S1 (d)	Bituminous Concrete Class 4 **(e)**	Bituminous Concrete Class 4 **(e)**
Curb Mix	Bituminous Concrete Class 3	Bituminous Concrete Class 3

Notes

(a) This mix designation is generally included with projects where the English measurement system is used. The mix designation may contain both the English measurement system

designation and the SI (metric) measurement system designation, one of which would be in parenthesis.

(b) This mix designation is generally included with projects where the SI (metric) measurement system is used. The mix designation may contain both the English measurement system designation and the SI measurement system designation, one of which would be in parenthesis.

(c) This mix is no longer in use except by contract-specific Special Provision; if this mix is called for in the Plans but no such Special Provision is included for this contract a suitable substitute must be approved by the Engineer.

(d) Unless approved by the Engineer, the Superpave Design Level for the Official Mix Designation bituminous concrete replacing a Marshall mix called for in the plans or other contract documents shall be Design Level 2 for mixes used on mainline or shoulders of state-maintained roadways and Design Level 1 elsewhere, including but not limited to driveways or sidewalks.

(e) All mixes designed under the Marshall mix-design method are no longer covered by the 4.06 Special Provision. Wherever they appear in Contract plans and documents they shall be substituted by the "Official Mix Designation" in the same row of the Mix Designation Equivalency Table. Unless approved by the Engineer, the Superpave Design Level shall be Level 1.

PG Binder Designation Equivalency Table

Official Binder Designation	Equivalent Binder Designation	Use
PG 64S-22	PG 64-22	Hot-Mix Asphalt (HMA S* pay items and pay items using HMA S* materials)**(a),(b)**
PG 64E-22	PG 76-22	Polymer-Modified Asphalt (PMA S* pay items and pay items using HMA S* materials)**(a),(b)**

Notes

(a) Use the Mix Designation Equivalency Table above to identify the Official Mix Designation for materials using the Marshall mix design method, i.e. "Bituminous Concrete Class *."

(b) Refer to the NTC – Superpave Design Level for the Superpave Design Level to use for each mix on a project. The PG Binder Designation Equivalency Table can be used to obtain the Official Binder Designation for each mix identified in the NTC – Superpave Design Level.

NOTICE TO CONTRACTOR - SUPERPAVE DESIGN LEVEL INFORMATION

Hot-Mix Asphalt (HMA) and Polymer-Modified Asphalt (PMA) constructed according to the Superpave mix-design system are required to attain a Superpave Design Level and are required to use a Performance Graded (PG) binder. The Superpave Design Levels required for this project are listed in Table 1. The required PG binder is indicated for each mix with an "X" in the appropriate box in Table 1.

TABLE 1 – Superpave Design Level and Performance Graded (PG) Binder

Mix Designation	**PG Binder**		_____ _____ _____ _____	**Route** __175__ _____ _____ _____	**Route** _____ _____ _____ _____	**Route** _____ _____ _____ _____	**Route** _____ _____ _____ _____
	PG 64S-22	**PG 64E-22**	**Design Level**	**Design Level**	**Design Level**	**Design Level**	**Design Level**
HMA S0.25	X	-	-	2	-	-	-
HMA S0.375	-	-	-	-	-	-	-
HMA S0.5	X	-	-	2	-	-	-
HMA S1	X	-	-	2	-	-	-
PMA S0.25	-	-	-	-	-	-	-
PMA S0.375	-	-	-	-	-	-	-
PMA S0.5	-	-	-	-	-	-	-
PMA S1	-	-	-	-	-	-	-

Note: Please note that PMA mix designations typically use PG 64E-22 and HMA mix designations use PG 64S-22

NOTICE TO CONTRACTOR – UTILITY GENERATED SCHEDULE

Section 1.08.03 of the Contract special provisions contains utility related scheduling information. This information was provided to the Connecticut Department of Transportation (Department) by the utility companies regarding their identified work on this project.

The utility scheduling information is provided to assist the Contractor in scheduling its activities. However, the Department does not ensure its accuracy and Section 1.05.06 of the Standard Specifications still is in force.

The utility scheduling information shall be incorporated into the Contractor's pre-award schedule in accordance with the Department's Bidding and Award Manual and Section 1.05.08 of the Contract.

After award, the Contractor shall conduct a utility coordination meeting or meetings to obtain contemporaneous scheduling information from the utilities prior to submitting its baseline schedule to the Department in accordance with Section 1.05.08 of the Contract.

The Contractor shall incorporate the contemporaneous utility scheduling information into its baseline schedule submittal. The baseline schedule shall include Contractor predecessor and successor activities to the utility work in such detail as acceptable to the Engineer.

NOTICE TO CONTRACTOR – MINIMUM CONCRETE COMPRESSIVE STRENGTH

The concrete strength or allowable design stress specified in the General Notes is for design purposes only. The minimum compressive strength of concrete in constructed components shall comply with the requirements of Section 6.01 Concrete for Structures.

NOTICE TO CONTRACTOR – AMTRAK ROW RESTRICTED ACCESS

The Contractor is hereby notified that an Agreement with Amtrak has not yet been acquired. The Contractor or any of his Subcontractors, Suppliers or any other entity, many not enter Amtrak property (right-of-way) or conduct operations which Amtrak determines to require flag protection, until such time that a written agreement is in place between the Connecticut Department of Transportation and Amtrak. The Contractor will be notified, by the Engineer, when the agreement is complete and fully executed by said parties.

NOTICE TO CONTRACTOR – CONSTRUCTION OF ACCESS ROAD FOR GAS MAIN RELOCATION

The Contractor shall clear and grub and construct the access road at the northeast corner of the bridge between approximate Station 217+25 and 218+25 upon issuance of the Notice to Proceed and as the first task of the construction contract in order to provide unobstructed access and to facilitate relocation of the Connecticut Natural Gas main. The Contractor shall then continue work elsewhere within the project limits.

SECTION 1.02 – PROPOSAL REQUIREMENTS AND CONDITIONS

Article 1.02.04 – Examination of Plans, Specifications, Special Provisions and Site of Work:

Replace the third sentence of the last paragraph with:

The Department cannot ensure a response to inquiries received later than ten (10) days prior to the original scheduled opening of the related bid.

SECTION 1.07 - LEGAL RELATIONS AND RESPONSIBILITIES

Article 1.07.10 - Contractor's Duty to Indemnify the State against Claims for Injury or Damage:

Add the following after the only paragraph:

"It is further understood and agreed by the parties hereto, that the Contractor shall not use the defense of Sovereign Immunity in the adjustment of claims or in the defense of any suit, including any suit between the State and the Contractor, unless requested to do so by the State."

1.07 - LEGAL RELATIONS AND RESPONSIBILITIES

Article 1.07.13 - Contractor's Responsibility for Adjacent Property, Facilities and Services is supplemented as follows:

The following company and representative shall be contacted by the Contractor to coordinate the protection of their utilities on this project 30 days prior to the start of any work on this project involving their utilities:

Eversource Energy:
Mr. Barry C. Lashley, Msc.
Supervisor-Construction Engineering
135 New Rd., MADISON AWC
Madison, CT 06443
Phone: (203) 245-5208
Email: barry.lashley@eversource.com

Frontier Commincations:
Mr. Raymond Puzemis
Engineering Supervisor
1441 North Colony Rd
Meriden, CT 06450-4101
Phone: (203)-238-5657
Email: raymond.w.puzemis@ftr.com

Lightower Fiber Networks:
Mr. Eric Clark,
Manager Fiber Construction
1781 Highland Avenue
Cheshire, CT 06410
Phone: (203) 649-3904
Email: eclark@lightower.com

Level (3) Communications, LLC:
Mr. Rick Miller
Project Manager, OSP Relocations
1025 Eldorado Boulevard - 43C-405
Broomfield, CO 80021
Phone: 720-888-7568
Email: Rick.Miller@Level3.com

CoxCom, Inc.:
Mr. Thomas Derway
Capital/Utility Coordinator
801 Parker Street
Manchester, CT 06045
Phone: (860) 432-5040
Email: thomas.derway@cox.com

Connecticut Natural Gas Corporation:
Mr. Vasant C. Patel,
Manager - Utility Coordination
76 Meadow Street, 1st Floor
East Hartford, CT 06108
Phone: (860) 727-3114
Email: vpatel@ctgcorp.com

Mr. Mike Weaver
Project Manager, OSP Relocations
1025 Eldorado Boulevard – 43C-317
Broomfield, CO 80021
Phone : (919)-710-8891
Email : mike.weaver@level3.com

SECTION 1.08 - PROSECUTION AND PROGRESS

Article 1.08.04 - Limitation of Operations - Add the following:

In order to provide for traffic operations as outlined in the Special Provision "Maintenance and Protection of Traffic," the Contractor will not be permitted to perform any work which will interfere with the described traffic operations on all project roadways as follows:

Route 175

Monday through Friday between 6:00 a.m. and 8:00 p.m.

Saturday and Sunday between 8:00 a.m. through 8:00 p.m.

During stages 2 and 4, the Contractor will be allowed to close one lane in each direction on Route 175 for a period that may start no earlier than 9:00 p.m. on Friday evening and end no later than 5:00 a.m. on the following Monday morning (56 hour maximum). The lane closure shall take place during a non-holiday weekend.

The Contractor shall notify the Engineer at least 14 days in advance of the start of the lane closures.

During the period of lane closure, the Contractor shall be allowed to halt traffic for a period not to exceed 10 minutes for the purpose of removing existing superstructure units and installing new superstructure units.

It is anticipated that work on adjacent projects will be ongoing simultaneously with this project. The Contractor shall be aware of those projects and anticipate that coordination will be required to maintain proper traffic flow at all times on all project roadways, in a manner consistent with these specifications and acceptable to the Engineer.

The Contractor will not be allowed to perform any work that will interfere with traffic operations on a roadway when traffic operations are being restricted on that same roadway, unless there is at least a one mile clear area length where the entire roadway is open to traffic or the closures have been coordinated and are acceptable to the Engineer. The one mile clear area length shall be measured from the end of the first work area to the beginning of the signing pattern for the next work area.

SECTION 6.03 - STRUCTURAL STEEL

6.03.01 - Description: *After the third paragraph, add the following:*
" Work under this item also includes the surface preparation, shop painting, and field touch-up painting of new structural steel."

6.03.02 – Materials: *After the second paragraph, add the following:*
" Painting materials for this work shall conform to the following:

- The Contractor shall select a three-coat system from the qualified product List A or B, issued by the Northeast Protective Coating Committee (NEPCOAT). The approved NEPCOAT listings may be found at the NEPCOAT website at http://www.nepcoat.org/
- Note: The List B Carboline Company system that specifies Carboguard 888 is not eligible for use under this special provision at this time.
- The system chosen shall have a prime coat that has achieved a Class 'B' slip coefficient for faying surfaces. Top coat paint color shall be as noted on the plans.
- Both the shop painted and field touchup applied coating systems shall be of the same three-coat system. A compatible organic zinc rich primer shall be used for any necessary field touch up.
- The same coating material manufacturer shall furnish all materials for the complete coating system. Intermixing of materials within and between coating systems will not be permitted.
- Thinning of paint shall conform to the manufacturer's written instructions."

6.03.03 – Construction Methods: *Revise* Subarticle 4(f) "Field Erection - High Strength Bolted Connections" *as follows:*

Replace the first sentence of the fourth paragraph "Surface Conditions: At the time of assembly … other foreign material." *with the following:*
" Connection faying surfaces within portions of structural steel designated to be painted shall receive a single coat of primer in accordance with requirements stipulated elsewhere in this special provision."

Delete the fifth paragraph of Subarticle 4(f) *and the three bulleted paragraphs after it:*
"Paint is permitted on … wire brushing is not permitted."

After the last paragraph of Article 6.03.03, *before* Tables A through C*, add the following:*
" The painting application shall be done in compliance with the following requirements:

Qualifications of Shop Painting Firm: All shop painting of structural steel must be performed by and in an enclosed shop that is certified by the SSPC Painting Contractor Certification Program QP-3, entitled "Standard Procedure for Evaluating Qualifications of Shop Painting Contractors" in the enclosed shop category or by a shop that holds an AISC Quality Certificate with a "Sophisticated Paint Endorsement" in the enclosed shop category. The firm shall be fully certified, including endorsements, for the duration of the surface preparation and

coating application. A copy of the subject certification shall be provided to the Engineer prior to commencing any surface preparation or coating application.

The shop painting firm is required to have at least one (1) **Coating Application Specialist (CAS) (SSPC ACS/NACE No. 13)**-certified (Level II-Interim Status-Minimal) craft-worker. CAS-certified (Level II-Interim Status-Minimal) craft-worker(s) are required for all crews/craft-workers up to four (4) crew members. For each crew larger than four (4), an additional CAS-certified (Level II-Interim Status-Minimal) craft-worker shall be present on each painting/blasting crew during blast cleaning and spray application (Atmospheric and Immersion Service) operations. A crew-member is a person who is on the job performing hand-held nozzle blast cleaning and/or spray application of protective coatings on a steel structure. The certification(s) must be kept current for the duration of the Project work.

The complete coating system shall be applied in an enclosed shop except for field touch-up painting which shall be applied after all bolts are fully tensioned and deck formwork removed. The enclosed shop shall be a permanent facility with outside walls to grade and a roof where surface preparation and coating activities are normally conducted in an environment not subject to outdoor weather conditions or blowing dust.

Quality Control Inspection of Shop Painting: The firm performing shop painting of the structural steel shall have a written quality control (QC) program. A copy of the QC program and record keeping procedures shall be provided to the Engineer prior to commencing any surface preparation or coating application. The program shall contain, but not be limited to, the following:

1. Qualifications of QC staff.
2. Authority of QC staff. QC staff must have the authority to stop non-conforming work.
3. Procedure for QC staff to advise operation supervisor, in writing, of non-conforming work.
4. Sample copy of QC inspection reports that will document compliance with specifications.
5. Procedure for calibrating inspection equipment and recording calibration.
6. Procedure for repairing defective coating applications.

The Contractor or Shop shall provide at least one Quality Control Inspector for the duration of the shop application to provide Quality Control. The QC Inspector must be a National Association of Corrosion Engineers (NACE) Certified Coating Inspector Level 3 with Peer Review. The QC Inspector shall verbally inform the Engineer on a daily basis, of the progress and any corrective actions performed on the coating work. The QC Inspector shall be present during all cleaning and coating operations.

The Contractor or Shop shall be responsible for purchasing and providing the latest version of the NACE Coating Inspector Log Book(s) and all necessary inspection tools. The Contractor's QC Inspector shall stamp the front page of each inspector's log book used during painting operations. The stamped book(s) shall indicate the inspector's NACE certification number, certification expiration date and shall also be signed. All daily coating activity shall be recorded in the Log Book. Copies of the log entries shall be provided on a daily basis to the Department's Quality

Assurance (QA) shop representative. Upon completion of the coating, the log book(s) shall then be furnished to the Department's QA shop representative.

Technical Advisor: The Contractor or Shop shall obtain the services of a technical advisor who is employed by the coating manufacturer to assist the Engineer and shop painting firm during this work. The technical advisor shall be a qualified representative and shall be made available at the Shop upon request by the QC Inspector or the Engineer.

Surface Preparation: The following steps shall be performed prior to abrasive blast cleaning of steel members:

1. All corners and edges shall be rounded to a 1/16-inch radius or chamfered to a 1/16-inch chamfer.
2. All fins, slivers and tears shall be removed and ground smooth.
3. All rough surfaces shall be ground smooth.
4. Flame cut edges shall be ground over their entire surface such that any hardened surface layer is removed, and subsequent abrasive blast cleaning produces the specified surface profile depth.

Immediately before abrasive blast cleaning all steel members shall be solvent cleaned in accordance with SSPC-SP1 - "Solvent Cleaning."

Abrasive blast cleaning shall be performed in accordance with SSPC-SP 10 - "Near White Blast Cleaning" using a production line shot and grit blast machine or by air blast. The abrasive working mix shall be maintained such that the final **surface profile** is within the range described herein.

The QC Inspector shall test the abrasive for oil, grease or dirt contamination in accordance with the requirements of ASTM D7393 and document the test results. Contaminated abrasive shall not be used to blast clean steel surfaces. The blast machine shall be cleared of all contaminated abrasive and then solvent cleaned thoroughly in accordance with SSPC-SP 1 "Solvent Cleaning." New uncontaminated abrasive shall be added. Abrasive shall be tested for contaminants in accordance with the requirements of ASTM D7393 prior to the start of blast cleaning operations and at least every four hours during the blast cleaning operations.

All compressed air sources shall have properly sized and designed oil and moisture separators, attached and functional, to allow air at the nozzle, either for blast cleaning, blow-off, painting or breathing, to be oil-free, and moisture-free. The equipment shall have sufficient pressure to accomplish the associated work efficiently and effectively.

The QC Inspector shall perform the blotter test and document the results at the start of each blasting shift and at least every four hours during the blasting operation to ensure that the compressed air is free of oil and moisture. The blotter test shall be performed in accordance with the procedure outlined in ASTM D4285. For contaminated air sources, the oil and moisture separators shall be drained and the air retested.

No surface preparation or coating shall be done when the relative humidity is at or above 80 percent or when the surface temperature of the steel is less than five (5) degrees Fahrenheit above the dewpoint temperature as determined by a surface thermometer and an electric or sling psychrometer.

Surface Profile: The steel surface profile shall be 1 to 3 mils. Each girder or beam shall have the surface profile measured at a minimum of three locations in accordance with the test requirements of ASTM D4417, Method C. Smaller pieces such as diaphragms shall have the surface profile measured at a minimum of three locations on one piece at the beginning of abrasive blast operations and at least every four hours and at the end of abrasive blast cleaning operations. This measurement shall be performed with both coarse (0.8-2.0 mils) and extra coarse (1.5-4.5 mils) replica tape. During this measurement, special attention shall be given to areas that may have been shielded from the blast wheels, such as the corners of stiffeners and connection plates. The impressed tapes shall be filed in the NACE Coating Inspector's Log Book.

Application Methods: The coating system shall be applied by spray equipment of a type and size capable of applying each coat within the required thickness range. The applicator shall strictly adhere to the manufacturer's written recommendations for application methods, cure times, temperature and humidity restrictions and recoat times for each individual coat of the specified system. However, in no case shall coatings be applied in ambient conditions that exceed the relative humidity and dewpoint temperature control limits specified herein. Brushes shall be used in areas where spray application will not achieve acceptable results. Brushing technique shall be performed in a manner that will provide a uniform, blended finish.

Conventional spray equipment with mechanical agitators shall be used for prime coat application.

All storage, mixing, thinning, application and curing techniques and methods shall be accomplished in strict accordance with the printed material data sheets and application instructions published by the respective coating material manufacturer.

Surfaces shall be painted with the specified prime coat material before the end of the same work shift that they were blast cleaned and before any visible rust back occurs. Applied coatings shall not have runs, sags, holidays, pinholes or discontinuities.

The dry film thickness shall be within the range specified in the manufacturer's printed literature for the specified coating system. Dry film thickness shall be measured in accordance with SSPC-PA 2. The prime, intermediate and top coats shall be of contrasting colors as determined by the Engineer. There shall be no color variation in the topcoat as determined by comparison with Federal Standard 595.

Areas Requiring Special Treatment: All steel surfaces shall receive the three-coat shop applied system as specified except the following particular area types which shall be treated as follows:

1. Faying surfaces of connections shall receive a single application of primer. The dry film thickness shall be no greater than the thickness tested on the coating manufacturer's Certified Test Report for slip coefficient.

2. All steel surfaces within four (4) inches of field welds shall receive a single mist coating of primer at 0.5 - 1.5 mils dry film thickness.
3. Top surfaces of top flanges that will be in contact with concrete shall receive a single mist coating of primer at 0.5 - 1.5 mils dry film thickness.
4. Edges and shop welds shall be locally hand-striped with a brush in the longitudinal direction with an additional coat of an appropriate zinc-rich primer prior to application of the full intermediate coat. The application of the striping materials shall be in accordance with the coatings manufacturer's written instructions. The striping material shall be a contrasting color to distinguish it from the primer and intermediate coats.
5. The interior surfaces of box girders, including bracing, shall be prepared in accordance with these specifications then coated with the first two coats of the three-coat system. The intermediate coat in these areas shall be white and match Federal Standard 595 Color Number 27925.

Adhesion: Adhesion strength of the fully coated assemblies shall be the more restrictive of the manufacturer's specified adhesion strength or at least 600 psi for systems with organic zinc primers and at least 250 psi for systems with inorganic zinc rich primers measured as per ASTM D4541 using apparatus under Annex A4. All adhesion test locations shall be recoated in accordance with this specification at no additional cost. The QC Inspector shall perform adhesion strength tests every 500 sf and shall document the adhesion strength test results.

If adhesion test results are less than the specified value, but equal to or greater than 80% of the specified value, four (4) additional adhesion tests shall be taken within the 500 sf area of the failed test. If any of the additional adhesion tests are less than the specified value, the coating shall be removed from the entire piece and re-applied at the Contractor's expense. If any adhesion tests are less than 80% of the specified value, the entire coating system shall be removed from the piece and re-applied at the Contractor's expense.

Smaller pieces such as diaphragms shall be analyzed in lots that have an overall coated surface area of approximately 500 sf.

Protection of Coated Structural Steel: All fully coated and cured assemblies shall be protected from handling and shipping damage with the prudent use of padded slings, dunnage, separators and tie downs. Loading procedures and sequences shall be designed to protect all coated surfaces. Erection marks for field identification of members and weight marks shall be affixed in such a manner as to facilitate removal upon final assembly without damage to the coating system.

Field Touch-Up Painting of Shop Applied Coating: Field touch-up painting shall be undertaken by the Contractor for the purpose of completing coating applications of masked-off areas at splices, connections, and for the repair of coated surfaces damaged during shipment or construction, as directed by the Engineer. The Aesthetics of any field painting is very important. Every effort must be made to perform any field painting in a professional manner that does not affect the appearance or aesthetic value of the structural steel in any way. Significant color variations or texture changes between the shop painting and field painting will not be allowed. The Contractor will be required to perform any additional field painting work required to provide

consistent color and texture throughout the structural steel. This is especially true for all Fascia surfaces and areas exposed to public view. The Engineer will be the sole judge on color variations and textures variations of the field painting.

The Painting Contractor shall submit for approval by the Engineer a complete coating application procedure for all touch-up painting and corrective work. .

The field applied coating for touch-up painting shall be the same system used in the shop applied application. The intermediate and topcoat material for field touch-up painting shall be from the same lot and batch used in the shop provided its shelf life has not expired. If the shelf life has expired, the same material of the same color from a different lot and batch shall be used.

Field application of coatings shall be in accordance with the manufacturer's written application guidelines and these specifications. All areas cleaned to bare metal must be coated with zinc-rich primer before any visible rusting occurs.

After all concrete is placed and the forms are removed, all rust, scale, dirt, grease, concrete splatter and other foreign material shall be completely removed from all painted surfaces. All surfaces to be field painted shall also be cleaned by solvent cleaning in accordance with SSPC-SP 1, hand tool cleaning SSPC-SP 2, and power tool cleaning SSPC-SP 3 and SSPC-SP 11. Areas cleaned to SSPC-SP 11 must have a 1-3 mil profile and must be primed prior to rusting. All debris generated from cleaning operations must be contained and properly disposed of by the Contractor.

Bolts, nuts, washers and surrounding areas shall receive brush applications of intermediate and topcoat after final tensioning. Careful attention shall be given to bolted connections to insure that all bolts, nuts and washers are fully coated and that no gaps are left unfilled and uncoated.

Damage to the coating system that extends to the steel surface (such as scratches, gouges or nicks), shall have the entire three-coat system locally reapplied after power tool cleaning to bare metal in **accordance with SSPC-SP 11. The coating system adjacent to the damage shall be feathered back to increase** the surface area for touch up painting. The area cleaned to SSPC-SP 11 shall be primed with a zinc-rich primer before rusting occurs.

Damage to the coating system that extends back only to the prime or intermediate coat, shall only have the topcoat applied. Application of the touch-up materials in these damaged areas shall be performed by brush only.

During any field painting the Contractor shall protect property, pedestrians, vehicular and other traffic upon, underneath, or in the vicinity of the bridge, and also all portions of the bridge superstructure and substructure against damage or disfigurement from errant coating materials.

Tarps shall be used to collect all surface preparation debris. The Contractor shall be responsible for disposing of all removed materials, including tarps.

<u>Contractor – Subcontractor Qualifications:</u> Contractors and subcontractors doing field touchup painting work are required to be certified by the SSPC Painting Contractor Certification Program

(PCCP) to QP-1, entitled "Standard Procedure for Evaluating Qualifications of Painting Contractors (Field Application to Complex Structures)" at the time of field touchup coating application.

Contractors and subcontractors are required to have at least one (1) **Coating Application Specialist (CAS) (SSPC ACS/NACE No. 13)**-certified (Level II-Interim Status-Minimal) craft-worker. CAS-certified (Level II-Interim Status-Minimal) craft-worker(s) are required for all crews/craft-workers up to four (4) crew members. For each crew larger than four (4), an additional CAS-certified (Level II-Interim Status-Minimal) craft-worker shall be present on each painting/blasting crew during blast cleaning and spray application (Atmospheric and Immersion Service) operations. A crew member is a person who is on the job performing hand-held nozzle blast cleaning and/or spray application of protective coatings on a steel structure. The certification(s) must be full, not interim, and must be kept current for the duration of the Project work. If a Contractor's, subcontractor's or any craft-worker's certification expires, the firm will not be allowed to do any work on this item until the certification is reissued.

Requests for extension of time for any delay to the completion of the Project due to an inactive certification will not be considered and liquidated damages will apply. At the option of the Engineer, if such a delay will adversely impact the successful and timely completion of the Project, the Department may require the Contractor to engage another SSPC certified contractor to do the painting work at the prime contractor's expense.

Quality Control Inspection of Field Touchup Painting: The Contractor performing field touchup painting of the structural steel shall have a written quality control (QC) program. A copy of the QC program and record keeping procedures shall be provided to the Engineer prior to commencing any surface preparation or coating application. The program shall contain, but not be limited to, the following:

1. Qualifications of QC staff.
2. Authority of QC staff. QC staff must have the authority to stop non-conforming work.
3. Procedure for QC staff to advise operation supervisor, in writing, of non-conforming work.
4. Sample copy of QC inspection reports that will document compliance with specifications.
5. Procedure for calibrating inspection equipment and recording calibration.
6. Procedure for repairing defective coating applications.

The Contractor shall provide at least one (1) Coating Inspector who is a National Association of Corrosion Engineers (NACE) Certified Coating Inspector Level 3 with Peer Review for the duration of the field application to provide Quality Control. The QC Inspector shall verbally inform the Engineer on a daily basis, of the progress and any corrective actions performed on the coating work. The QC Inspector shall be present during all cleaning and coating operations.

The Contractor shall be responsible for purchasing and providing the latest version of the NACE Coating Inspector Log Book(s) and all necessary inspection tools. The Contractor's QC Inspector shall stamp the front page of each inspector's log book used during painting operations. The stamped book(s) shall indicate the inspector's NACE certification number, certification expiration date and shall also be signed. All daily coating activity shall be recorded in the Log Book. Copies

of the log entries shall be provided on a daily basis to the Department's Quality Assurance (QA) field representative. Upon completion of the coating, the log book(s) shall then be furnished to the Department's QA field representative.

General: The word "PAINTED" followed by the month and year the painting of the structure is completed along with the ConnDOT Project Number and the manufacturer's abbreviations for each of the three coats, shall be stenciled on the inside of a fascia girder at mid-depth of the girder in three (3) inch high block letters located near the abutment, so as to be clearly visible from the ground below. Paint for stenciling information shall be of a contrasting color and be compatible with the topcoat."

6.03.05 – Basis of Payment: *Add the following at the end of the second paragraph:*

"Payment for either method for new structural steel, complete in place, shall also include shop painting, all field touch-up painting and corrective or repair field painting, QC Inspector(s), QC Log Book(s) and testing equipment, technical advisor, "Painted" stencil, equipment, tools and labor incidental thereto."

ON-THE-JOB TRAINING (OJT) WORKFORCE DEVELOPMENT PILOT:

Description

To provide construction industry related job opportunities to minorities, women and economically disadvantaged individuals; and to increase the likelihood of a diverse and inclusive workforce on Connecticut Department of Transportation (ConnDOT) projects.

All contractors (existing and newcomers) will be automatically placed in the Workforce Development Pilot. Standard OJT requirements typically associated with individual projects will no longer be applied at the project level for new projects. Instead, these requirements will be applicable on an annual basis for each contractor performing work on ConnDOT projects.

The OJT Workforce Development Pilot will allow a contractor to train employees on Federal, State and privately funded projects located in Connecticut. However, contractors should give priority to training employees on ConnDOT Federal-Aid funded projects.

Funding

The Department will establish an OJT fund annually from which contractors may bill the Department directly for eligible trainee hours. The funds for payment of trainee hours on federal-aid projects will be allocated from the ½ of 1% provided for OJT funding, and will be based on hours trained, not to exceed a maximum of $25,000.00 per year; per contractor.

Minorities and Women

Developing, training and upgrading of minorities, women and economically disadvantaged individuals toward journeyperson level status is the primary objective of this special training provision. Accordingly, the Contractor shall make every effort to enroll minority, women and economically disadvantaged individuals as trainees to the extent that such persons are available within a reasonable area of recruitment. This training commitment is not intended, and shall not be used, to discriminate against any applicant for training whether a member of a minority group or not.

Assigning Training Goals

The Department, through the OJT Program Coordinator, will assign training goals for a calendar year based on the contractor's past two year's activities and the contractor's anticipated upcoming year's activity with the Department. At the beginning of each year, all contractors eligible will be contacted by the Department to determine the number of trainees that will be assigned for the upcoming calendar year. At that time, the Contractor shall enter into an agreement with the Department to provide a self-imposed on-the-job training program for the calendar year. This agreement will include a specific number of annual training goals agreed to by both parties. The number of training assignments may range from one (1) to six (6) per

contractor per calendar year. Each January, a summary of the trainees required and the OJT Workforce Development Pilot package will be sent to participating contractors. The number of trainees assigned to each contractor in the summary will increase proportionately not to exceed 6, as shown in the following table. This package will also be provided to contractors as they become newly eligible for the OJT Workforce Development Pilot throughout the remainder of the year. Projects awarded after September 30 will be included in the following year's Program.

The dollar thresholds for training assignments are as follows:

$4.5 – 8 million=	1 trainee
$ 9 – 15 million=	2 trainees
$16 – 23 million=	3 trainees
$24 – 30 million=	4 trainees
$31 – 40 million=	5 trainees
$41 – and above=	6 trainees

Training Classifications

Preference shall be given to providing training in the following skilled work classifications. However, the classifications established are not all-inclusive:

Equipment Operators	Electricians
Laborers	Painters
Carpenters	Iron / Reinforcing Steel Workers
Concrete Finishers	Mechanics
Pipe Layers	Welders

The Department has on file common training classifications and their respective training requirements; that may be used by the contractors. Contractors shall submit new classifications for specific job functions that their employees are performing. The Department will review and recommend for acceptance the new classifications proposed by contractors, if applicable. New classifications shall meet the following requirements:

Proposed training classifications are reasonable and realistic based on the job skill classification needs, and the number of training hours specified in the training classification is consistent with common practices and provides enough time for the trainee to obtain journeyman level status.

Where feasible, 25% percent of apprentices or trainees in each occupation shall be in their first year of apprenticeship or training. The number of trainees shall be distributed among the work classifications on the basis of the contractor's needs and the availability of journeymen in the various classifications within a reasonable area of recruitment.

No employee shall be employed as a trainee in any classification in which they have successfully completed a training course leading to journeyman level status or in which they have been employed as a journeyman.

Records and Reports

The Contractor shall maintain enrollment in the program and submit all required reports documenting company compliance under these contract requirements. These documents and any other information shall be submitted to the OJT Program Coordinator as requested.

Upon the trainee's completion and graduation from the program, the Contractor shall provide each trainee with a certification Certificate showing the type and length of training satisfactorily completed.

Trainee Interviews

In order to determine the continued effectiveness of the OJT Program in Connecticut, the department will periodically conduct personal interviews with current trainees and may survey recent graduates of the program. This enables the OJT Program Coordinator to modify and improve the program as necessary. Trainee interviews are generally conducted at the job site to ensure that the trainees' work and training is consistent with the approved training program.

Trainee Wages

Contractors shall compensate trainees on a graduating pay scale based upon a percentage of the prevailing minimum journeyman wages (Davis-Bacon Act). Minimum pay shall be as follows:

60 percent	of the journeyman wage for the first half of the training period
75 percent	of the journeyman wage for the third quarter of the training period
90 percent	of the journeyman wage for the last quarter of the training period

In no case, will the trainee be paid less than the prevailing rate for general laborer as shown in the contract wage decision (must be approved by the Department of Labor).

Achieving or Failing to Meet Training Goals

The Contractor will be credited for each trainee currently enrolled or who becomes enrolled in the approved training program and providing they receive the required training under the specific training program. Trainees will be allowed to be transferred between projects if required by the Contractor's schedule and workload. The OJT Program Coordinator must be notified of transfers within five (5) days of the transfer or reassignments by e-mail (Phylisha.Coles@ct.gov).

Where a contractor does not or cannot achieve its annual training goal with female or minority trainees, they must produce adequate Good Faith Efforts documentation. Good Faith Efforts are those designed to achieve equal opportunity through positive, aggressive, and continuous result-oriented measures. 23 CFR § 230.409(g) (4). Contractors should request minorities and females from unions when minorities and females are under-represented in the contractor's workforce.

Whenever a contractor requests ConnDOT approval of someone other than a minority or female, the contractor must submit documented evidence of its Good Faith Efforts to fill that position with a minority or female. When a non-minority male is accepted, a contractor must continue to attempt to meet its remaining annual training goals with females and minorities.

Where a contractor has neither attained its goal nor submitted adequate Good Faith Efforts documentation, ConnDOT will issue a letter of non-compliance. Within thirty (30) days of receiving the letter of non-compliance, the contractor must submit a written Corrective Action Plan (CAP) outlining the steps that it will take to remedy the non-compliance. The CAP must be approved by ConnDOT. Failure to comply with the CAP may result in your firm being found non-responsive for future projects.

Measurement and Payment

Optional reimbursement will be made to the contractor for providing the required training under this special provision on ConnDOT Federal-Aid funded projects only.

Contractor will be reimbursed at $0.80 for each hour of training given to an employee in accordance with an approved training or apprenticeship program. This reimbursement will be made even though the Contractor receives additional training program funds from other sources, provided such other source does not specifically prohibit the contractor from receiving other reimbursement.

Reimbursement for training is made annually or upon the trainees completion and not on a monthly basis. No payment shall be made to the Contractor if either the failure to provide the required training, or the failure to hire the trainee as a journeyperson, is caused by the Contractor.

Program reimbursements will be made directly to the prime contractor on an annual basis. To request reimbursement, prime contractors must complete the Voucher for OJT Workforce Development Pilot Hourly Reimbursement for each trainee in the OJT Program. This form is included in the OJT Workforce Development Pilot package and is available on the Department's web site at:

www.ct.gov/dot

The completed form must be submitted to the Office of Contract Compliance for approval. The form is due on the 15th day of January for each trainee currently enrolled and for hours worked on ConnDOT Federal-Aid funded projects only.

D.B.E. SUBCONTRACTORS AND MATERIAL SUPPLIERS OR MANUFACTURERS

January 2013

I. ABBREVIATIONS AND DEFINITIONS AS USED IN THIS SPECIAL PROVISION

A. *CTDOT* means the Connecticut Department of Transportation.

B. *USDOT* means the U.S. Department of Transportation, including the Office of the Secretary, the Federal Highway Administration ("FHWA"), the Federal Transit Administration ("FTA"), and the Federal Aviation Administration ("FAA").

C. *Broker* means a party acting as an agent for others in negotiating Contracts, Agreements, purchases, sales, etc., in return for a fee or commission.

D. *Contract, Agreement or Subcontract* means a legally binding relationship obligating a seller to furnish supplies or services (including but not limited to, construction and professional services) and the buyer to pay for them. For the purposes of this provision, a lease for equipment or products is also considered to be a Contract.

E. *Contractor* means a consultant, second party or any other entity under Contract to do business with CTDOT or, as the context may require, with another Contractor.

F. *Disadvantaged Business Enterprise ("DBE")* means a for profit small business concern:

1. That is at least 51 percent owned by one or more individuals who are both socially and economically disadvantaged or, in the case of a corporation, in which 51 percent of the stock is owned by one or more such individuals; and

2. Whose management and daily business operations are controlled by one or more of the socially and economically disadvantaged individuals who own it; and

3. Certified by CTDOT under Title 49 of the Code of Federal Regulations, Part 26, (Title 49 CFR Part 23 of the Code of Federal Regulations for Participation of Disadvantaged Business Enterprise in Airport Concessions)

G. *USDOT-assisted Contract* means any Contract between CTDOT and a Contractor (at any tier) funded in whole or in part with USDOT financial assistance.

H. *Good Faith Efforts ("GFE")* means all necessary and reasonable steps to achieve a DBE goal or other requirement which by their scope, intensity, and appropriateness to the objective, can reasonably be expected to fulfill the program requirement.

I. *Small Business Concern* means, with respect to firms seeking to participate as DBEs in USDOT-assisted Contracts, a small business concern as defined pursuant to Section 3 of the Small Business Act and Small Business Administration ("SBA") regulations implementing it (13 CFR Part 121) that also does not exceed the cap on average annual gross receipts in 49 CFR Part 26, Section 26.65(b).

J. *Socially and Economically Disadvantaged Individual* means any individual who is a citizen (or lawfully admitted permanent resident) of the United States and who is:

1. Any individual who CTDOT finds, on a case-by-case basis, to be a socially and economically disadvantaged individual.

2. Any individuals in the following groups, members of which are rebuttably presumed to be socially and economically disadvantaged:

    - "Black Americans", which includes persons having origins in any of the Black racial groups of Africa;
    - "Hispanic Americans", which includes persons of Mexican, Puerto Rican, Cuban, Dominican, Central or South American, or other Spanish or Portuguese culture or origin, regardless of race;
    - "Native Americans", which includes persons who are American Indians, Eskimos, Aleuts, or Native Hawaiians.
    - "Asian-Pacific Americans", which includes persons whose origins are from Japan, China, Taiwan, Korea, Burma (Myanmar), Vietnam, Laos, Cambodia (Kampuchea), Thailand, Malaysia, Indonesia, the Philippines, Brunei, Samoa, Guam, the U.S. Trust Territories of the Pacific Islands (Republic of Palau), the Commonwealth of the Northern Marianas Islands, Macao, Fiji, Tonga, Kiribati, Juvalu, Nauru, or Federated States of Micronesia;
    - "Subcontinent Asian Americans", which includes persons whose origins are from India, Pakistan, Bangladesh, Bhutan, the Maldives Islands, Nepal or Sri Lanka;
    - Women;
    - Any additional groups whose members are designated as socially and economically disadvantaged by the SBA, at such time as the SBA designation becomes effective.

K. *Commercially Useful Function ("CUF")* means the DBE is responsible for the execution of the work of the contract and is carrying out its responsibilities by actually performing, managing, and supervising the work involved with its own forces and equipment. The DBE must be responsible for procuring, determining quantity, negotiating price, determining quality and paying for all materials (where applicable) associated with their work. The DBE must also perform at least 30% of the total cost of its contract with its own workforce.

II. ADMINISTRATIVE REQUIREMENTS

A. General Requirements

A DBE goal percentage equaling fifteen percent (15%) of the Contract value has been established for this Contract. This DBE goal percentage will be applied to the final Contract value to ultimately determine the required DBE goal. If additional work is required, DBE firms should be provided the appropriate opportunities to achieve the required DBE goal.

In order to receive credit toward the Contract DBE goal, the firms utilized as DBE subcontractors or suppliers must be certified as DBEs in the type of work to be counted for credit by CTDOT's Office of Contract Compliance prior to the date of the execution of the subcontract. Neither CTDOT nor the State of Connecticut's Unified Certification Program (UCP) makes any representation as to any DBE's technical or financial ability to perform the work. Prime contractors are solely responsible for performing due diligence in hiring DBE subcontractors.

All DBEs shall perform a CUF for the work that is assigned to them. The Contractor shall monitor and ensure that the DBE is in compliance with this requirement. The Connecticut DBE UPC Directory of certified firms can

be found on the CTDOT website http://www.ct.gov/dot. The directory lists certified DBE firms with a description of services that they are certified to perform. Only work identified in this listing may be counted towards the project's DBE goal. A DBE firm may request to have services added at any time by contacting CTDOT's Office of Contract Compliance. No credit shall be counted for any DBE firm found not to be performing a CUF.

Once a Contract is awarded, all DBEs that were listed on the pre-award DBE commitment document must be utilized. The Contractor is obligated to provide the value and items of the work originally established in the pre-award documentation to the DBE firms listed in the pre-award documentation. Any modifications to the pre-award commitment must follow the procedure established in Section II-C.

The Contractor shall designate a liaison officer who will administer the Contractor's DBE program. Upon execution of this Contract, the name of the liaison officer shall be furnished in writing to CTDOT's unit administering the Contract, CTDOT's Office of Contract Compliance and CTDOT's Office of Construction ("OOC"). Contact information for the designated liaison officer shall be furnished no later than the scheduled date for the pre-construction meeting.

The Contractor shall submit a bi-monthly report to the appropriate CTDOT unit administering the Contract. This report shall indicate what work has been performed to date, with the dollars paid and percentage of DBE goal completed.

Verified payments made to DBEs shall be included in this bi-monthly report. A sample form is included on the CTDOT website.

In addition, the report shall include:

1. A projected time frame of when the remaining work is to be completed for each DBE.

2. A statement by the Contractor either confirming that the approved DBEs are on schedule to meet the Contract goal, or that the Contractor is actively pursuing a GFE.

3. If retainage is specified in the Contract specifications, then a statement of certification that the subcontractors' retainage is being released in accordance with 1.08.01 (Revised or supplemented).

Failure by the Contractor to provide the required reports may result in CTDOT withholding an amount equal to one percent (1%) of the monthly estimate until the required documentation is received.

The Contractor shall receive DBE credit when a DBE, or any combination of DBEs, perform work under the Contract in accordance with this specification.

Only work actually performed by and/or services provided by DBEs which are certified for such work and/or services, as verified by CTDOT, can be counted toward the DBE goal. Supplies and equipment a DBE purchases or leases from the Contractor or its affiliate cannot be counted toward the goal.

Monitoring of the CUF will occur by CTDOT throughout the life of the project. If it is unclear that the DBE is performing the work specified in its subcontract with the prime Contractor, further review may be required. If it is determined that the DBE is not performing a CUF, then the work performed by that DBE will not be counted towards the DBE goal percentage.

B. Subcontract Requirements

The Contractor shall submit to CTDOT's OOC all requests for subcontractor approvals on the standard CLA-12 forms provided by CTDOT. The dollar amount and items of work identified on the CLA-12 form must, at minimum, equal the dollar value submitted in the pre-award commitment. CLA-12 forms can be found at http://www.ct.gov/dot/construction under the "Subcontractor Approval" section. All DBE subcontractors must be identified on the CLA-12 form, regardless of whether they are being utilized to meet a Contract goal percentage. A copy of the legal Contract between the Contractor and the DBE subcontractor/supplier, a copy of the Title VI Contractor Assurances and a copy of the Required Contract Provision for Federal Aid Construction Contracts (Form FHWA-1273) (Federal Highway Administration projects only) must be submitted along with a request for subcontractor approval. These attachments cannot be substituted by reference.

If retainage is specified in the Contract specifications, then the subcontract agreement must contain a prompt payment mechanism that acts in accordance with Article 1.08.01 (Revised or supplemented).

If the Contract specifications do not contain a retainage clause, the Contractor shall not include a retainage clause in any subcontract agreement, and in this case, if a Contractor does include a retainage clause, it shall be deemed unenforceable.

In addition, the following documents are to be included with the CLA-12, if applicable:

- An explanation indicating who will purchase material.
- A statement explaining any method or arrangement for utilization of the Contractor's equipment.

The subcontract must show items of work to be performed, unit prices and, if a partial item, the work involved by all parties. If the subcontract items of work or unit prices are modified, the procedure established in Section II-C must be followed.

Should a DBE subcontractor further sublet items of work assigned to it, only lower tier subcontractors who are certified as a DBE firm will be counted toward the DBE goal. If the lower tier subcontractor is a non-DBE firm, the value of the work performed by that firm will not be counted as credit toward the DBE goal.

The use of joint checks between a DBE firm and the Contractor is acceptable, provided that written approval is received from the OOC prior to the issuance of any joint check. Should it become necessary to issue a joint check between the DBE firm and the Contractor to purchase materials, the DBE firm must be responsible for negotiating the cost, determining the quality and quantity, ordering the material and installing (where applicable), and administering the payment to the supplier. The Contractor should not make payment directly to suppliers.

Each subcontract the Contractor signs with a subcontractor must contain the following assurance:

"The subcontractor/supplier/manufacturer shall not discriminate on the basis of race, color, national origin, or sex in the performance of this contract. The contractor shall carry out applicable requirements of 49 CFR Part 26 in the award and administration of DOT-assisted contracts. Failure by the contractor/subcontractor/supplier/manufacturer to carry out these requirements is a material breach of this contract, which may result in the termination of this contract or such other remedy as the recipient deems appropriate."

C. Modification to Pre-Award Commitment

Contractors may not terminate for convenience any DBE subcontractor or supplier that was listed on the pre-award DBE commitment without prior written approval of the OOC. This includes, but is not limited to, instances

in which a Contractor seeks to perform work originally designated for a DBE subcontractor with its own forces or those of an affiliate, a non-DBE firm, or with another DBE firm. Prior to approval, the Contractor must demonstrate to the satisfaction of the OOC, that it has good cause, as found in 49CFR Part 26.53 (f)(3), for termination of the DBE firm.

Before transmitting its request for approval to terminate pre-award DBE firms to the OOC, the Contractor must give written notice to the DBE subcontractor and include a copy to the OOC of its notice to terminate and/or substitute, and the reason for the notice.

The Contractor must provide five (5) days for the affected DBE firm to respond. This affords the DBE firm the opportunity to advise the OOC and the Contractor of any reasons why it objects to the termination of its subcontract and why the OOC should not approve the Contractor's action.

Once the Contract is awarded, should there be any amendments or modifications of the approved pre-award DBE submission other than termination of a DBE firm, the Contractor shall follow the procedure below that best meets the criteria associated with the reason for modification:

1. If the change is due to a scope of work revision or non-routine quantity revision by CTDOT, the Contractor must notify CTDOT's OOC in writing or via electronic mail that their DBE participation on the project may be impacted as soon as they are aware of the change. In this case, a release of work from the DBE firm may not be required; however the Contractor must concurrently notify the DBE firm in writing, and copy the OOC for inclusion in the project DBE file. This does not relieve the Contractor of its obligation to meet the Contract specified DBE goal, or of any other responsibility found in this specification.

2. If the change is due to a factor other than a CTDOT directive, a request for approval in writing or via electronic mail of the modification from the OOC must be submitted, along with an explanation of the change(s), prior to the commencement of work. The Contractor must also obtain a letter of release from the originally named DBE indicating their concurrence with the change, and the reason(s) for their inability to perform the work. In the event a release cannot be obtained, the Contractor must document all efforts made to obtain it.

3. In the event a DBE firm that was listed in the pre-award documents is **unable** or **unwilling** to perform the work assigned, the Contractor shall:

    - Notify the OOC Division Chief immediately and make efforts to obtain a release of work from the firm.

    - Submit documentation that will provide a basis for the change to the OOC for review and approval prior to the implementation of the change.

    - Use the DBE Directory to identify and contact firms certified to perform the type of work that was assigned to the unable or unwilling DBE firm. The Contractor should also contact CTDOT's Office of Contract Compliance for assistance in locating additional DBE firms to the extent needed to meet the contract goal.

Should a DBE subcontractor be terminated or fail to complete work on the Contract for any reason, the Contractor must make a GFE to find another DBE subcontractor to substitute for the original DBE. The DBE replacement shall be given every opportunity to perform at least the same amount of work under the Contract as the original DBE subcontractor.

If the Contractor is unable to find a DBE replacement:

- The Contractor should identify other contracting opportunities and solicit DBE firms in an effort to meet the Contract DBE goal requirement, if necessary, and provide documentation to support a GFE. (Refer to GFE in Section III.)

- The Contractor must demonstrate that the originally named DBE, who is unable or unwilling to perform the work assigned, is in default of its subcontract, or identify other issues that affected the DBE firm's ability to perform the assigned work. **The Contractor's ability to negotiate a more advantageous agreement with another subcontractor is not a valid basis for change.**

III. GOOD FAITH EFFORTS

The DBE goal is **NOT** reduced or waived for projects where the Contractor receives a Pre-Award GFE determination from the Office of Contract Compliance prior to the award of the Contract. It remains the responsibility of the Contractor to make a continuing GFE to achieve the specified Contract DBE goal. The Contractor shall pursue every available opportunity to obtain additional DBE firms and document all efforts made in such attempts.

At the completion of all Contract work, the Contractor shall submit a final report to CTDOT`s unit administering the Contract indicating the work done by and the dollars paid to DBEs. Only verified payments made to DBEs performing a CUF will be counted towards the Contract goal.

Goal attainment is based on the total Contract value, which includes all construction orders created during the Contract. If the Contractor does not achieve the specified Contract goal for DBE participation or has not provided the value of work to the DBE firms originally committed to in the pre-award submission, the Contractor shall submit documentation to CTDOT`s unit administering the Contract detailing the GFE made during the performance of the Contract to satisfy the goal.

A GFE should consist of the following, where applicable (CTDOT reserves the right to request additional information):

1. A detailed statement of the efforts made to replace an unable or unwilling DBE firm, and a description of any additional subcontracting opportunities that were identified and offered to DBE firms in order to increase the likelihood of achieving the stated goal.

2. A detailed statement, including documentation of the efforts made to contact and solicit bids from certified DBEs, including the names, addresses, and telephone numbers of each DBE firm contacted; the date of contact and a description of the information provided to each DBE regarding the scope of services and anticipated time schedule of work items proposed to be subcontracted and the response from firms contacted.

3. Provide a detailed explanation for each DBE that submitted a subcontract proposal which the Contractor considered to be unacceptable stating the reason(s) for this conclusion.

4. Provide documentation, if any, to support contacts made with CTDOT requesting assistance in satisfying the specified Contract goal.

5. Provide documentation of all other efforts undertaken by the Contractor to meet the defined goal. Additional documentation of efforts made to obtain DBE firms may include but will not be limited to:
   - Negotiations held in good faith with interested DBE firms, not rejecting them without sound reasons.
   - Written notice provided to a reasonable number of specific DBE firms in sufficient time to allow effective participation.
   - Those portions of work that could be performed by readily available DBE firms.

In instances where the Contractor can adequately document or substantiate its GFE and compliance with other DBE Program requirements, the Contractor will have satisfied the DBE requirement and no administrative remedies will be imposed.

IV. PROJECT COMPLETION

At the completion of all Contract work, the Contractor shall:

1. Submit a final report to CTDOT`s unit administering the Contract indicating the work done by, and the dollars paid to DBEs.

2. Submit verified payments made to all DBE subcontractors for the work that was completed.

3. Submit documentation detailing any changes to the DBE pre-award subcontractors that have not met the original DBE pre-award commitment, including copies of the Department's approvals of those changes.

4. Retain all records for a period of three (3) years following acceptance by CTDOT of the Contract and those records shall be available at reasonable times and places for inspection by authorized representatives of CTDOT and Federal agencies. If any litigation, claim, or audit is started before the expiration of the three (3) year period, the records shall be retained until all litigation, claims, or audit findings involving the records are resolved.

If the Contractor does not achieve the specified Contract goal for DBE participation in addition to meeting the dollar value committed to the DBE subcontractors identified in the pre-award commitment, the Contractor shall submit documentation to CTDOT`s unit administering the Contract detailing the GFE made during the performance of the Contract to satisfy the goal.

V. SHORTFALLS

A. Failure to meet DBE goals

As specified in (II-A) above, attainment of the Contract DBE goal is based on the final Contract value. The Contractor is expected to achieve the amount of DBE participation originally committed to at the time of award; however, additional efforts must be made to provide opportunities to DBE firms in the event a Contract's original value is increased during the life of the Contract.

The Contractor is expected to utilize the DBE subcontractors originally committed in the DBE pre-award documentation for the work and dollar value that was originally assigned.

If a DBE is terminated or is unable or unwilling to complete its work on a Contract, the Contractor shall make a GFE to replace that DBE with another certified DBE to meet the Contract goal.

The Contractor shall immediately notify the OOC of the DBE's inability or unwillingness to perform, and provide reasonable documentation and make efforts to obtain a release of work from the firm.

If the Contractor is unable to find a DBE replacement, then the Contractor should identify other contracting opportunities and solicit DBE firms in an effort to meet the Contract DBE goal requirement, if necessary, and provide documentation to support a GFE.

When a DBE is unable or unwilling to perform, or is terminated for just cause, the Contractor shall make a GFE to find other DBE opportunities to increase DBE participation to the extent necessary to at least satisfy the Contract goal.

For any DBE pre-award subcontractor that has been released appropriately from the project, no remedy will be assessed, provided that the Contractor has met the criteria described in Section
II-C.

B. Administrative Remedies for Non-Compliance:

In cases where the Contractor has failed to meet the Contract specified DBE goal or the DBE pre-award commitment, and where no GFE has been demonstrated, then one or more of the following administrative remedies will be applied:

1. A reduction in Contract payments to the Contractor as determined by CTDOT, not to exceed the shortfall amount of the **DBE goal**. The maximum shortfall will be calculated by multiplying the Contract DBE goal (adjusted by any applicable GFE) by the final Contract value, and subtracting any verified final payments made to DBE firms by the Contractor.

2. A reduction in Contract payments to the Contractor determined by CTDOT, not to exceed the shortfall amount of the **pre-award commitment**. The maximum shortfall will be calculated by subtracting any verified final payments made by the Contractor to each DBE subcontractor from the amount originally committed to that subcontractor in the pre-award commitment.

3. A reduction in Contract payments to the Contractor determined by CTDOT for any pre-award DBE subcontractor who has not obtained the dollar value of work identified in the DBE pre-award commitment and has not followed the requirements of Section II-C or for any DBE firm submitted for DBE credit that has not performed a CUF.

4. The Contractor being required to submit a written DBE Program Corrective Action Plan to CTDOT for review and approval, which is aimed at ensuring compliance on future projects.

5. The Contractor being required to attend a Non-Responsibility Meeting on the next contract where it is the apparent low bidder.

6. The Contractor being suspended from bidding on contracts for a period not to exceed six (6) months.

VI. CLASSIFICATIONS OTHER THAN SUBCONTRACTORS

A. Material Manufacturers

Credit for DBE manufacturers is 100% of the value of the manufactured product. A manufacturer is a firm that operates or maintains a factory or establishment that produces on the premises the materials or supplies obtained by the Contractor.

If the Contractor elects to utilize a DBE manufacturer to satisfy a portion of, or the entire specified DBE goal, the Contractor must provide the OOC with:

- Subcontractor Approval Form (CLA-12) indicating the firm designation,
- An executed "Affidavit for the Utilization of Material Suppliers or Manufacturers" (sample attached), and
- Substantiation of payments made to the supplier or manufacturer for materials used on the project.

B. Material Suppliers (Dealers)

Credit for DBE dealers/suppliers is limited to 60% of the value of the material to be supplied, provided such material is obtained from an approved DBE dealer/supplier.

In order for a firm to be considered a regular dealer, the firm must own, operate, or maintain a store, warehouse, or other establishment in which the materials, supplies, articles or equipment of the general character described by the specifications and required under the contract are bought, kept in stock, and regularly sold or leased to the public in the usual course of business. At least one of the following criteria must apply:

- To be a regular dealer, the firm must be an established, regular business that engages, as its principal business and under its own name, in the purchase and sale or lease of the products in question.
- A person may be a regular dealer in such bulk items as petroleum products, steel, cement, gravel, stone, or asphalt without owning, operating or maintaining a place of business if the person both owns and operates distribution equipment for the products. Any supplementing of the regular dealers' own distribution equipment shall be by long term lease agreement, and not on an ad hoc or contract to contract basis.
- Packagers, brokers, manufacturers' representatives, or other persons who arrange or expedite transactions are not regular dealers within the meaning of this paragraph.

If the Contractor elects to utilize a DBE supplier to satisfy a portion or the entire specified DBE goal, the Contractor must provide the OOC with:

- Subcontractor Approval Form (CLA-12) indicating the firm designation,
- An executed "Affidavit for the Utilization of Material Suppliers or Manufacturers" (sample attached), and
- Substantiation of payments made to the supplier or manufacturer for materials used on the project.

C. Brokering

- Brokering of work for DBE firms who have been listed by the Department as certified brokers is allowed. Credit for those firms shall be applied following the procedures in Section VI-D.

- Brokering of work by DBEs who have been approved to perform subcontract work with their own workforce and equipment is not allowed, and is a Contract violation.

- Firms involved in the brokering of work, whether they are DBEs and/or majority firms who engage in willful falsification, distortion or misrepresentation with respect to any facts related to the project shall be referred to the U.S. DOT, Office of the Inspector General for prosecution under Title 18, U.S. Code, Part I, Chapter 47, Section 1020.

D. Non-Manufacturing or Non-Supplier DBE Credit

Contractors may count towards their DBE goals the following expenditures with DBEs that are not manufacturers or suppliers:

- Reasonable fees or commissions charged for providing a bona fide service such as professional, technical, consultant or managerial services and assistance in the procurement of essential personnel, facilities, equipment materials or supplies necessary for the performance of the Contract, provided that the fee or commission is determined by the OOC to be reasonable and consistent with fees customarily allowed for similar services.

- The fees charged only for delivery of materials and supplies required on a job site when the hauler, trucker, or delivery service is a DBE, and not the manufacturer, or regular dealer of the materials and supplies, and provided that the fees are determined by the OOC to be reasonable and not excessive as compared with fees customarily allowed for similar services.

- The fees or commissions charged for providing bonds or insurance specifically required for the performance of the Contract, provided that the fees or commissions are determined by CTDOT to be reasonable and not excessive as compared with fees customarily allowed for similar services.

E. Trucking

While technically still considered a subcontractor, the rules for counting credit for DBE trucking firms are as follows:

- The DBE must own and operate at least one fully licensed, insured, and operational truck used on the Contract.
- The DBE receives credit for the total value of the transportation services it provides on the Contract using trucks it owns, insures and operates using drivers it employs.
- The DBE may lease trucks from another DBE firm, including an owner-operator who is certified as a DBE. The DBE who leases trucks from another DBE receives credit for the total value of the transportation services the lessee DBE provides on the Contract.
- The DBE may lease trucks from a non-DBE firm; however the DBE may only receive credit for any fees or commissions received for arranging transportation services provided by the non-DBE firms. Additionally, the DBE firm must demonstrate that they are in full control of the trucking operation for which they are seeking credit.

VII. Suspected DBE Fraud

In appropriate cases, CTDOT will bring to the attention of the USDOT any appearance of false, fraudulent, or dishonest conduct in connection with the DBE program, so that USDOT can take the steps, e.g. referral to the

Department of Justice for criminal prosecution, referral to USDOT Inspector General, action under suspension and debarment or Program Fraud and Civil Penalties rules provided in 49 CFR Part 31.

CONNECTICUT DEPARTMENT OF TRANSPORTATION
(OFFICE OF CONSTRUCTION)
BUREAU OF ENGINEERING AND CONSTRUCTION

This affidavit must be completed by the State Contractor's DBE notarized and attached to the contractor's request to utilize a DBE supplier or manufacturer as a credit towards its DBE contract requirements; failure to do so will result in not receiving credit towards the contract DBE requirement.

State Contract No.

Federal Aid Project No.

Description of Project

I, _____, acting in behalf of _____,
(Name of person signing Affidavit) (DBE person, firm, association or corporation)
of which I am the _____ certify and affirm that _____
(Title of Person) (DBE person, firm, association or corporation)
is a certified Connecticut Department of Transportation DBE. I further certify and affirm that I have read and understand 49 CFR, Sec. 26.55(e)(2), as the same may be revised.

I further certify and affirm that _____ will assume the actual and
(DBE person, firm, association or Corporation)
for the provision of the materials and/or supplies sought by _____ .

If a manufacturer, I operate or maintain a factory or establishment that produces, on the premises, the materials, supplies, articles or equipment required under the contract an of the general character described by the specifications.

If a supplier, I perform a commercially useful function in the supply process. As a regular dealer, I, at a minimum, own and operate the distribution equipment for bulk items. Any supplementing of my distribution equipment shall be by long-term lease agreement, and not on an ad hoc or contract-by-contract basis.

I understand that false statements made herein are punishable by Law (Sec. 53a-157), CGS, as revised).

(Name of Corporation or Firm)

(Signature & Title of Official making the Affidavit)

Subscribed and sworn to before me, this _____ day of _____ 20 _____.

Notary Public (Commissioner of the Superior Court)

My Commission Expires_____

CERTIFICATE OF CORPORATION

I, _____, certify that I am the _____
(Official) (President)
of the Corporation named in the foregoing instrument; that I have been duly authorized to affix the seal of the Corporation to such papers as require the seal; that _____, who signed said instrument on behalf of the Corporation, was then _____ of said corporation; that said instrument was duly signed for and in behalf of said Corporation by authority of its governing body and is within the scope of its corporation powers.

_____ _____
(Signature of Person Certifying) (Date)

ITEM #0000985A – TRACK MONITORING

Description: The Contractor shall monitor horizontal and vertical movement in accordance with this special provision as follows:

Survey work shall be performed by a Registered Land Surveyor in the State of Connecticut. Survey crew should be trained under AMTRAK's Railroad Safety Contractor/Lessee Employee Training program and maintain certification for the duration of the work.

Railroad traffic shall be maintained at all times with safety and continuity, and Contractors shall conduct their operations in compliance with all rules, regulations, and requirements of the Railroad (including these Specifications) with respect to any work performed on, over, under, within or adjacent to Railroad property. Contractor shall be responsible for acquainting themselves with such rules, regulations and requirements. Any violation of the Railroad's safety rules, regulations or requirements shall be grounds for the immediate suspension of the Contractor work, and the retraining of all personnel, at the Contractor's expense.

Scope: If any work that could potentially affect the stability of the track is occurring within 50 feet of a track, or within the influence line of a track, then monitoring points shall be established along the track. The influence line descends from a point one foot horizontally away from the outside end of the tie bottom one unit vertically for every unit and a half horizontally.

Safety: All work close enough to foul a track must only be performed under the direction of qualified railroad personnel. People performing track monitoring are classified as Roadway Workers and must be trained in Roadway Worker Protection.

Points: Each location shall include a point on the top of rail marked with paint or crayon on the field side of the rail and used for vertical measurements, and a point on the tie for horizontal measurements. In wood ties, the point shall be marked with a PK nail or similar surveyor's marker; on concrete or steel ties, the point shall be marked with paint.

Point Locations: Reference points shall be established along the track beginning at the point where the work is closest to the track. Points shall continue to be placed at intervals of 50 feet along the track to the point where the work ends or does not meet the conditions outlined above, and then at 50 feet 100 feet, and 200 feet away from the end point(s). Where more than one track may be affected, points shall be established on each track that could be affected.

Measurement Accuracy: Monitoring points shall be established to within 0.001 feet, and monitoring shall be done to 0.01 feet.

Monitoring: Monitoring shall be performed at the beginning and end of each shift of work. Points shall be measured, the measurements recorded, and the numbers compared with previous measurements. All points shall be measured each time monitoring occurs, except for the points

200 feet away from the end of work; these points shall only be measured if any of the other measurements exceed an allowable deviation.

Allowable Deviations: If track is found to have moved either vertically or horizontally by more than one half of the Amtrak Maintenance limits as specified in Amtrak's MW-1000 for the particular class of track involved, then all work shall cease immediately and the contractor shall immediately notify the designated Amtrak Project Engineer. Work may not resume until the designated Amtrak Project Engineer has inspected the site and approved.

Track Maintenance: Deficiencies in track surface and alignment caused by construction activities shall be corrected solely by Amtrak forces at project expense.

TRACK CLASS	MAX. PASSENGER SPEED (MPH)	CROSS LEVEL (INCHES) The Difference in Cross Level Between Any Two Points Less Than		DEVIATION FROM UNIFORM PROFILE (INCHES)		DEVIATION FROM HORIZONTAL ALIGNMENT (INCHES)	DEVIATION FROM HORIZONTAL ALIGNMENT (INCHES)
		10'	62'	31' CHORD	62' CHORD	31' CHORD	62' CHORD
MAINTENANCE LIMITS							
1	15	1	2 ¼	N/A	2 ¼	2 ¾	3 ¾
2	30	1	1 ⅝	N/A	2	1 ½	2 ¼
3	60	1	1 ½	N/A	1 ⅝	7/8	1 ¼
4	80	1	1 ¼	N/A	1 ½	¾	1
5	90	1	1 ⅛	N/A	1	⅜	½
6	110	¾	1	¾	¾	⅜	½
7	125	¾	1	¾	¾	⅜	⅜
8	160	¾	1	½	¾	⅜	⅜
9	200	¾	1	⅜	½	⅜	⅜
½ MAINTENANCE LIMITS							
1	15	½	1⅛	N/A	1 ⅛	1 ⅜	1 ⅞
2	30	½	13/16	N/A	1	¾	1 ⅛
3	60	½	¾	N/A	13/16	7/16	⅝
4	80	½	⅝	N/A	¾	⅜	½
5	90	½	9/16	N/A	½	3/16	¼
6	110	⅜	½	⅜	⅜	3/16	¼
7	125	⅜	½	⅜	⅜	3/16	3/16
8	160	⅜	½	¼	⅜	3/16	3/16
9	200	⅜	½	3/16	¼	3/16	3/16

Materials: As determined by the Contractor and approved by the Engineer and Amtrak.

Construction Methods: The Contractor shall submit a detailed method of track monitoring to the Engineer and Amtrak for review and approval prior to performing any sheet pile driving within 50 feet of the track and/or any excavation or directional drilling operations under the tracks.

Method of Measurement: This work will be paid for on a lump sum basis and will not be measured for payment.

Basis of Payment: This work will be paid for at the contract lump sum price for "Track Monitoring", which price shall include all materials, equipment, tools, and labor incidental thereto.

Pay Item	Pay Unit
Track Monitoring	LS

ITEM #0406275A - FINE MILLING OF BITUMINOUS CONCRETE (0 TO 4 INCHES)

Description: This work shall consist of the milling, removal, and disposal of existing bituminous concrete pavement.

Construction Methods: The Contractor shall remove the bituminous concrete material using means acceptable to the Engineer. The pavement surface shall be removed to the line, grade, and existing or typical cross-section shown on the plans or as directed by the Engineer.

The bituminous concrete material shall be disposed of offsite by the Contractor at an approved disposal facility unless otherwise stated in the Contract.

Any milled surface, or portion thereof, that is exposed to traffic shall be paved within five (5) calendar days unless otherwise stated in the plans or Contract.

The equipment for milling the pavement surface shall be designed and built for milling bituminous concrete pavements. It shall be self propelled with sufficient power, traction, and stability to maintain depth and slope and shall be capable of removing the existing bituminous concrete pavement.

The milling machine shall be equipped with a built-in automatic grade averaging control system that can control the longitudinal profile and the transverse cross-slope to produce the specified results. The longitudinal controls shall be capable of operating from any longitudinal grade reference, including string line, contact ski (30 feet minimum), non-contact ski (20 feet minimum), or mobile string line (30 feet minimum). The transverse controls shall have an automatic system for controlling cross-slope at a given rate. The Engineer may waive the requirement for automatic grade or slope controls where the situation warrants such action.

The machine shall be able to provide a 0 to 4 inch deep cut in one pass. The rotary drum of the machine shall use carbide or diamond tipped tools spaced not more than $^{5}/_{16}$ inch apart. The forward speed of the milling machine shall be limited to no more than 45 feet/minute. The tools on the revolving cutting drum must be continually maintained and shall be replaced as warranted to provide a uniform pavement texture.

The machine shall be equipped with an integral pickup and conveying device to immediately remove material being milled from the surface of the roadway and discharge the millings into a truck, all in one operation. The machine shall also be equipped with a means of effectively limiting the amount of dust escaping from the milling and removal operation.

When milling smaller areas or areas where it is impractical to use the above described equipment, the use of a lesser equipped milling machine may be permitted when approved by the Engineer.

Protection shall be provided around existing catch basin inlets, manholes, utility valve boxes, and any similar structures. Any damage to such structures as a result of the milling operation is the Contractor's responsibility and shall be repaired at the Contractor's expense.

To prevent the infiltration of milled material into the storm drainage system, the Contractor shall take special care to prevent the milled material from falling into the inlet openings or inlet grates. Any milled material that has fallen into inlet openings or inlet grates shall be removed at the Contractor's expense.

Surface Tolerance: The milled surface shall provide a satisfactory riding surface with a uniform textured appearance. The milled surface shall be free from gouges, longitudinal grooves and ridges, oil film, and other imperfections that are a result of defective equipment, improper use of equipment, or poor workmanship. The Contractor, under the direction of the Inspector, shall perform random spot-checks with a Contractor supplied ten-foot straightedge to verify surface tolerances at a minimum of five (5) locations per day. The variation of the top of two ridges from the testing edge of the straightedge, between any two ridge contact points, shall not exceed ¼ inch. The variation of the top of any ridge to the bottom of the groove adjacent to that ridge shall not exceed ¼ inch. Any unsatisfactory surfaces produced are the responsibility of the Contractor and shall be corrected at the Contractor's expense and to the satisfaction of the Engineer.

The depth of removal will be verified by taking measurements every 250 feet per each pass of the milling machine, or as directed by the Engineer. These depth measurements shall be used to monitor the average depth of removal.

Where a surface delamination between bituminous concrete layers or a surface delamination of bituminous concrete on Portland cement concrete causes a non-uniform texture to occur, the depth of milling shall be adjusted in small increments to a maximum of +/- ½ inch to eliminate the condition.

When removing bituminous concrete pavement entirely from an underlying Portland cement concrete pavement, all of the bituminous concrete pavement shall be removed leaving a uniform surface of Portland cement concrete, unless otherwise directed by the Engineer.

Any unsatisfactory surfaces produced by the milling operation are the Contractor's responsibility and shall be corrected at the Contractor's expense and to the satisfaction of the Engineer.

No vertical faces, transverse or longitudinal, shall be left exposed to traffic unless the requirements below are met. This shall include roadway structures (catch basins, manholes, utility valve boxes, etc.). If any vertical face is formed in an area exposed to traffic, a temporary paved transition shall be established according to the requirements shown on the plans. If the milling machine is used to form a temporary transition, the length of the temporary transition shall conform to Special Provision Section 4.06 –Bituminous Concrete, "Transitions for Roadway Surface," the requirements shown on the plans, or as directed by the Engineer. At all

permanent limits of removal, a clean vertical face shall be established by saw cutting prior to paving.
Roadway structures shall not have a vertical face of greater than one (1) inch exposed to traffic as a result of milling. All structures within the roadway that are exposed to traffic and greater than one (1) inch above the milled surface shall receive a transition meeting the following requirements:

For roadways with a posted speed limit of 35 mph or less*:

1. Round structures with a vertical face of greater than 1 inch to 2.5 inches shall be transitioned with a hard rubber tapered protection ring of the appropriate inside diameter designed specifically to protect roadway structures.
2. Round structures with a vertical face greater than 2.5 inches shall receive a transition of bituminous concrete formed at a minimum 24 to 1 (24:1) taper in all directions.
3. All rectangular structures with a vertical face greater than 1 inch shall receive a transition of bituminous concrete formed at a minimum 24 to 1 (24:1) taper in all directions.

*Bituminous concrete tapers at a minimum 24 to 1 (24:1) taper in all directions may be substituted for the protection rings if approved by the Engineer.

For roadways with a posted speed limit of 40, 45 or 50 mph:

1. All structures shall receive a transition of bituminous concrete formed at a minimum 36 to 1 (36:1) taper in the direction of travel. Direction of travel includes both the leading and trailing side of a structure. The minimum taper shall be 24 to 1 (24:1) in all other directions.

For roadways with a posted speed limit of greater than 50 mph:

1. All structures shall receive a transition of bituminous concrete formed at a minimum 60 to 1 (60:1) taper in the direction of travel. Direction of travel includes both the leading and trailing side of a structure. The minimum taper shall be 24 to 1 (24:1) in all other directions.

All roadway structure edges and bituminous concrete tapers shall be clearly marked with fluorescent paint. The paint shall be maintained throughout the exposure to traffic.

The milling operation shall proceed in accordance with the requirements of the “Maintenance and Protection of Traffic” and “Prosecution and Progress” specifications, or other Contract requirements. The more stringent specification shall apply.

Prior to opening an area which has been milled to traffic, the pavement shall be thoroughly swept with a sweeper truck. The sweeper truck shall be equipped with a water tank and be capable of removing the millings and loose debris from the surface. The sweeper truck shall operate at a forward speed that allows for the maximum pickup of millings from the roadway surface. Other

sweeping equipment may be provided in lieu of the sweeper truck where acceptable by the Engineer.

Any milled area that will not be exposed to live traffic for a minimum of 48 hours prior to paving shall require a vacuum sweeper truck in addition to, or in lieu of, mechanical sweeping. The vacuum sweeper truck shall have sufficient power and capacity to completely remove all millings from the roadway surface including any fine particles within the texture of the milled surface. Vacuum sweeper truck hose attachments shall be used to clean around pavement structures or areas that cannot be reached effectively by the main vacuum. Compressed air may be used in lieu of vacuum attachments if approved by the Engineer.

Method of Measurement: This work will be measured for payment by the number of square yards of area from which the milling of asphalt has been completed and the work accepted. No area deductions will be made for minor unmilled areas such as catch basin inlets, manholes, utility boxes and any similar structures.

Basis of Payment: This work will be paid for at the Contract unit price per square yard for "Fine Milling of Bituminous Concrete (0 to 4 Inches)." This price shall include all equipment, tools, labor, and materials incidental thereto.

No additional payments will be made for multiple passes with the milling machine to remove the bituminous surface.

No separate payments will be made for cleaning the pavement prior to paving; providing protection and doing handwork removal of bituminous concrete around catch basin inlets, manholes, utility valve boxes and any similar structures; repairing surface defects as a result of the Contractors negligence; providing protection to underground utilities from the vibration of the milling operation; removal of any temporary milled or paved transition; removal and disposal of millings; furnishing a sweeper truck and sweeping after milling. The costs for these items shall be included in the Contract unit price.

Pay Item	Pay Unit
Fine Milling of Bituminous Concrete (0 to 4 Inches)	S.Y.

ITEM #0406999A - ASPHALT ADJUSTMENT COST

The Asphalt Price is available on the Department of Transportation web site at:

http://www.ct.gov/dot/asphaltadjustment

The asphalt adjustment cost will be based on the variance in price for the performance-graded binder component of hot mix asphalt (HMA), Polymer Modified Asphalt (PMA), and Ultra-Thin Bonded Hot-Mix Asphalt mixtures completed and accepted in the contract.

An asphalt adjustment cost will be applied only if all of the following conditions are met:

I. For HMA and PMA mixtures:

a. The HMA or PMA mixture in which the adjustment is being applied is listed as a contract item with a pay unit of tons or metric tons.

b. The total quantity for all HMA and PMA mixtures in a contract or individual purchase order (Department of Administrative Service contract awards) exceeds 1000 tons or more.

c. The difference between the posted *Asphalt Base Price* and *Asphalt Period Price* varies by more than $5.00.

II. For Ultra-Thin Bonded HMA mixtures:

a. The Ultra-Thin Bonded HMA mixture in which the adjustment is being applied is listed as a contract item.

b. The total quantity for Ultra-Thin Bonded HMA mixture in a contract exceeds:

i. 800 tons (727 metric tons) if Ultra-Thin Bonded HMA is listed as a contract item with a pay unit of tons or metric tons.

ii. 30,000 square yards (25,080 square meters) if Ultra-Thin Bonded HMA is listed as a contract item with a pay unit of square yards or square meters.

Note: The quantity of Ultra-Thin Bonded HMA measured in tons shall be determined from the material documentation requirements set forth in the Ultra-Thin Bonded HMA Special Provision.

c. The difference between the posted *Asphalt Base Price* and *Asphalt Period Price* varies by more than $5.00.

d. No Asphalt Adjustment Cost shall be applied to the liquid emulsion that is specified as part of the Ultra-Thin Bonded HMA mixture system.

III. Regardless of the binder used in all HMA and/or PMA mixtures, the Asphalt Adjustment Cost will be based on PG 64-22.

The Connecticut Department of Transportation (ConnDOT) shall post on its website, the average per ton selling price (asphalt price) of the performance-graded binder. The average is based on the high and low selling price published in the most recent available issue of the **Asphalt Weekly Monitor®** furnished by Poten & Partners, Inc. under the "East Coast Market – New England, New Haven, Connecticut area", F.O.B. manufacturer's terminal.

The selling price furnished from the Asphalt Weekly Monitor ® is based on a standard ton (US$/ST). The metric ton price is determined by applying a factor of 1.1023 (US$/ST x 1.1023 = US$/mton). Example: $150.00/ton x 1.1023 = $165.34/mton

Formula: HMA x $\frac{PG\%}{100}$ x [(*Period Price - Base Price*] = $ ____ , where

- **HMA:**
  1. For HMA, PMA, and Ultra-Thin Bonded HMA mixtures with pay units of mass: The quantity (tons or metric tons) of accepted HMA, PMA, or Ultra-Thin Bonded HMA mixture measured and accepted for payment.
  2. For Ultra-Thin Bonded HMA mixtures with pay units of area: The quantity of Ultra-Thin Bonded HMA mixture delivered, placed, and accepted for payment, calculated in tons or metric tons as documented according to the Material Documentation provision (section E) of the Ultra-Thin Bonded HMA Special Provision.

- ***Asphalt Base Price***: The asphalt price that is posted on the ConnDOT website 28 days before the actual bid opening posted.

- ***Asphalt Period Price***: The asphalt price that is posted on the ConnDOT website for the period in which the HMA, PMA mixture is placed.

- Performance-Graded Binder percentage (**PG%**)

  1. For HMA or PMA mixes:
     PG% = 4.5
     - For Superpave 1.5 inch (37.5mm), Superpave 1.0 inch (25.0mm), PMA S1, HMA S1, and Class 4

       PG % = 5.0
     - For Superpave 0.50 inch (12.5mm), HMA S0.5, PMA S0.5, and Class 1

PG % = 6.0

- For Superpave 0.375 inch (9.5mm), HMA S0.375, PMA S0.375, Superpave 0.25 inch (6.25mm), HMA S0.25, PMA S0.25, Superpave #4 (4.75mm) and Class 2

2. For Ultra-Thin Bonded HMA mixes:
   PG% = Design % PGB (Performance Graded Binder) in the approved job mix formula, expressed as a percentage to one decimal point (e.g. 5.1%)

The adjustment shall not be considered as a changed condition in the contract because of this provision and because the Contractors are being notified before submission of bids.

Basis of Payment: The "Asphalt Adjustment Cost" will be calculated using the formula indicated above. A payment will be made for an increase in costs. A deduction from monies due the Contractor will be made for a decrease in costs.

The sum of money shown on the estimate, and in the itemized proposal as "Estimated Cost", for this item will be considered the bid price although payment will be made as described above. The estimated cost figure is not to be altered in any manner by the bidder. If the bidder should alter the amount shown, the altered figure will be disregarded and the original cost figure will be used to determine the amount of the bid for the Contract.

ITEM #0503001A - REMOVAL OF SUPERSTRUCTURE

Work under this item shall conform to the requirements of Section 5.03 amended as follows:

Article 5.03.01 - DESCRIPTION: Delete the first two paragraphs and replace with the following:

Work under this item shall consist of the removal and satisfactory disposal of the superstructure. Those items to be removed and disposed of shall include, but not be limited to; precast concrete beams, concrete sidewalk, parapets, protective fencing, and bituminous wearing surface as shown on the plans or as directed by the Engineer. This work shall also include the furnishing, installation, maintenance and removal of protective netting to prevent debris from falling on the railroad track structure / envelope below.

Article 5.03.03 - CONSTRUCTION METHODS: Add the following:

Removal of Superstructure: All work shall proceed as directed by and to the satisfaction of the Engineer in accordance with the details shown on the plans and the requirements of the Special Provisions "Maintenance and Protection of Traffic" and "Prosecution and Progress", contained elsewhere in these Specifications.

Material that is not specified for salvage shall become the property of the Contractor and shall be removed and disposed of by him.

Material designated for salvage shall be removed by methods that shall not cause damage to the salvaged material.

The removal shall not result in damage to any permanent construction (new or existing) or to adjoining property. If any damage does occur it shall be repaired by the Contractor to the satisfaction of the Engineer at no additional expense to the State.

The Contractor shall prepare and submit to the Engineer for review working drawings and written procedures for the removal of the superstructure in accordance with Article 1.05.02. Acceptance of the Contractor's plans shall not be considered as relieving the Contractor of any responsibility.

Article 5.03.04 – METHOD OF MEASUREMENT: Delete the entire article and replace with the following:

This work, being paid for on a lump sum basis, will not be measured for payment.

Article 5.03.05 – BASIS OF PAYMENT: Add the following:

The price of this work shall also include the furnishing, installation, maintenance and removal of protective netting to prevent debris from falling on the railroad track structure / envelope below.

The installation of external post-tensioning on the north half of existing during stage 1 and its subsequent removal shall be paid for under the item, “Temporary Post-Tensioning System”.

ITEM #0514271A – PRECAST CONCRETE/STEEL COMPOSITE SUPERSTRUCTURE

Description: Work under this item shall be in accordance with the applicable provisions of Sections 5.08, 6.01, 6.02 and 6.03, and the provisions contained herein.

This Item shall include the fabrication, painting, delivery, temporary bracing, and installation of the Prefabricated Bridge Units (PBUs), including all necessary materials, labor and equipment to complete the work, as shown on the plans. The PBUs are comprised of steel beams made composite with a precast reinforced concrete deck including a precast backwall.

This item also includes appurtenances that are incidental to the PBU or projecting from the PBU such as channel diaphragms, backwalls, bearing sole plates & filer plates, weep pipe support brackets and projecting reinforcing steel.

Due to the accelerated nature of this project, all PBUs shall be manufactured and accepted prior to the initiation of Stage 2 Construction.

Materials: The materials for Prefabricated Bridge Units shall conform to the following requirements:

Structural steel materials shall conform to the requirements of Section M.06. Shear stud connectors shall conform to the requirements of Subarticle M.06.02-12. All structural steel in the superstructure shall conform to the requirements of AASHTO M270, Grade 50 WT2. This includes the steel girders, connection plates, and diaphragms. The sole plates shall conform to AASHTO M270 Grade 50 W steel.

Class "F" Concrete shall be used for all concrete elements including, but not limited to, the bridge deck and backwall. Concrete shall meet the requirements of Article M.03.01, for Class "F" Concrete" and shall have a minimum 28-day compressive strength of 4,400 psi. The use of calcium chloride or an admixture containing calcium chloride will not be permitted.

Reinforcing steel shall be epoxy coated and conform to the requirements of Article M.06.01.

Painting of the structural steel at the beam ends shall conform to section 6.03.02.

Construction Methods: A Department Certified Precast Concrete Plant shall be used for the casting of the deck on the PBUs. The Contractor may elect to precast the deck; however the casting facility must become pre-qualified by the Department's Division of Materials Testing prior to casting.

1. **Shop Drawings:** Prior to any fabrication, the Contractor shall submit shop drawings in accordance with Article 1.05.02-3. Multiple shop drawings may be required for the PBUs since the fabrication can take place in two separate facilities. The Contractor shall coordinate

the preparation of the separate shop drawings to ensure that there are no conflicting details. Approval of the shop drawings will be required prior to the ordering of the materials and the fabrication of the prefabricated bridge units.

In addition to the standard detailing of shop drawings, the Contractor shall include the following information:

a. The stamp of the registered Professional Engineer licensed in the State of Connecticut who has reviewed and certified the shop drawings.

b. All lifting inserts, hardware, or devices and locations for Engineer's approval. All lifting devices shall be designed by the Contractor.

c. Locations and details of the lifting devices, including supporting calculations, type, and amount of any additional reinforcing required for lifting. All lifting devices will be designed based on the no cracking criteria in Chapter 8 of the PCI Design Handbook (Seventh Edition).

d. Details and methods for accommodating the dimensional requirement of each PBU accounting for profile grade and cross slope.

e. Methods for controlling the accumulation of dimensional tolerances through the use of working points or working lines. The width of each individual unit along with the width of the closure pour shall be determined such that, when pieces are laid together, the prefabricated bridge units shall satisfy the required bridge out-to-out width and cross slopes shown on the plans.

f. The minimum required compressive strength of the precast concrete deck prior to handling the prefabricated bridge units.

2. **Assembly Plan:** The Assembly Plan is a document prepared by the Contractor and a qualified Professional Engineer with specific knowledge of the Contractor's equipment and "means and methods" for constructing the precast elements required to complete the work on the project. The development of this Assembly Plan is closely linked to the schedule of operations and the interim material strengths necessary for the work to progress. The Contractor shall coordinate the development of the Assembly Plans with the development of the Shop Drawings to ensure consistent detailing. For example, if additional lifting hooks, grout ports, leveling devices, etc. are required, they should be added to the shop drawings prior to approval.

   The development of the Assembly Plan and Shop Drawings for the PBUs will not be measured separately for payment and should be considered incidental to this Item.

   The Assembly Plan shall be considered a Working Drawing. The development and approval of the Assembly Plan shall be according to Article 1.05.02. Approval of the Assembly Plan will be required prior to the initiation of the full roadway closure.

   Under no circumstances shall the fabrication of the prefabricated bridge units commence prior to the approval of the Shop Drawings and the Assembly Plan unless written permission is given by the Engineer. The Department shall reject any components fabricated before

receiving written approval or components that deviate from the approved drawings. Any expenses incidental to the revision of materials furnished, in accordance with the Shop Drawings and order lists, to make them comply with the plans and specifications, including costs incurred due to faulty detailing or fabrication, shall be borne by the Contractor.

At a minimum, the Assembly Plan shall include the following information:

a) Details and/or cut sheets of all equipment that will be employed for the assembly of the prefabricated bridge units.

b) Details of all equipment to be used to lift the PBUs including cranes, excavators, lifting slings, sling hooks, and jacks. Crane locations, operation radii, and lifting calculations will also be included. The factors of safety for the lifting of PBUs will be achieved by using 150% of the weight of the PBU being lifted. The Contractor is responsible for determining the center of gravity for all PBUs. Special care shall be used for PBUs that are not symmetrical. These elements may require special lifting hardware to allow for installation to the grades shown on the plans.

c) The Assembly plan shall address the potential for tension in the precast deck during shipping and handling. Allowable tension stresses in the concrete shall be according Chapter 8 of the PCI Design Handbook (seventh edition). Calculations shall be prepared for the lifting and handling in accordance with the no discernible cracking criteria. Lifting hook locations and hardware shall be coordinated with the Fabricator(s).

d) A statement of compliance with all requirements of applicable environmental permits.

e) A work area plan, depicting all affected utilities, drainage, and protective measures that will be employed throughout the construction activities.

f) Full size 22”x34” sheets depicting the assembly procedures for the PBUs.

g) A detailed schedule with the timeline for all operations. In development of the schedule the Contractor shall account for setting and cure times for concrete closure pours.

h) Methods of adjusting and securing the elements after placement.

i) Procedures for controlling erection tolerances for both the horizontal and vertical direction.

j) Methods of forming closure pours.

k) Methods for curing closure pours. The Contractor shall include detailed description of curing materials if casting is anticipated during times when wet weather can be anticipated.

l) The Assembly Plan shall be bound into one complete document and shall be prepared and stamped by a registered Professional Engineer licensed in the State of Connecticut.

3. **Installation:** The field personnel shall have knowledge of and follow the approved Assembly Plan. If changes are warranted due to varying site conditions, resubmit the plan for review

and approval.

Working points, working lines, and benchmark elevations shall be established prior to placement of all elements. The Contractor is responsible for field survey as necessary to complete the work. The District reserves the right to perform additional independent survey. This survey does not relieve the Contractor from performing survey for the construction. If discrepancies are found, the Contractor may be required to verify previous survey data.

The PBUs shall be placed in the sequence and according to the methods outlined in the Assembly Plan. The height of each element will be adjusted to acceptable tolerances by means of leveling devices or shims. The Contractor shall ensure that the PBU is in the proper horizontal and vertical location prior to releasing from the crane and setting the next unit. Vertical tolerance needs to be checked at the top surface of the PBU. Diaphragms may be used to control geometry; however if the required setting tolerance cannot be met, the Contractor may be required to adjust or fabricate new diaphragms.

4. Erection Tolerances:

a) Plan Alignment: Location and Clearances

The Contractor shall adhere to the following tolerances for the final condition of the PBU after placement:

i. Do not exceed 1/4 inch maximum deviation at each end of the span from overall longitudinal alignment after setting.

ii. Do not exceed 1/4 inch maximum deviation from overall transverse location (i.e. longitudinal position) at each line of bearings.

iii. Maximum deviation from alignment in both primary plan directions at each end of the span being set shall not exceed 1/4 inch or that required for the accommodation of manufactured expansion joint components or bearings, whichever is the less.

iv. In the absence of other constraints, keep individual elements or surfaces within 1/4 inch of location with respect to similar matching surfaces.

b) Bridge Bearings: Elevation and Location

The Contractor shall keep the elevation of individual bridge bearings within plus or minus 1/8 inch of required elevations. The plan location of bridge bearings shall be within a tolerance of 1/8 inch and the alignment within plus or minus 1/16 inch across the bearing.

If tolerances are not met, submit for approval of Engineer, means to adjust elevations or to correct for or accommodate errors or unintended deviations from required tolerances. Submit proposals and seek approval of the Engineer for the use of shims, injection of high strength grout or other methods to accommodate differences from required tolerance. Do likewise, for the accommodation of anchor bolts or similar restraining devices.

5. **Quality Control:** At a minimum, the following requirements shall be met:

   a) The precast reinforced concrete deck on top of the girder pairs shall be fabricated by a precast fabricator that is approved by the Department. The fabricator shall follow the Department's approved quality control procedures.

   b) The PBUs will be constructed to tolerances shown on the plans. Where tolerances are not shown, follow tolerance limits in the PCI MNL 116-99, "Manual for Quality Control for Plants and Production of Structural Precast Concrete Products, 4th Edition". Elements that are found to be out of tolerance may be subject to rejection. Rejection of the elements may be waived by the Engineer if the Contractor can demonstrate that the out of tolerance element can be installed without significant modifications to the bridge. For example, an over width element may be acceptable if the adjacent element is under width.

   c) The Contractor is required to provide field survey to determine that the PBUs are placed within the horizontal and vertical tolerances stated on the plans.

   d) The Contractor is responsible for interim testing of concrete placed in the field to allow the work to proceed with various stages of construction. For example, if the approved Assembly Plan allows for loads to be placed on the PBU after the closure pour concrete has achieved a compressive strength of 3000 psi, the Contractor will be required to test the concrete proving that the strength has been achieved. For materials used throughout the construction that have a proven strength gain at predetermined time interval, the compressive testing requirements may be waived by the Engineer. All testing furnished by the Contractor shall be performed by an AASHTO accredited laboratory. All Quality Control test results shall be submitted to the Division of Materials Testing section for approval. Additional testing by the Contractor will be performed at no additional cost and will not be measured for payment. Final acceptance testing of concrete shall be in accordance with Article 6.01.03.

   e) The fabricator and Contractor shall prevent cracking or damage of the PBUs during handling, storage, transportation, and final installation in permanent position.

   f) If damage occurs, replace defects and breakage of the PBUs in accordance with the following:

      i. Members that sustain damage or surface defects during fabrication, handling, storage, hauling, or erection are subject to review or rejection.

      ii. Approval must be obtained before performing repairs.

      iii. Repair work must re-establish the elements' structural integrity, durability, and aesthetics to the satisfaction of the Engineer.

      iv. Determine the cause when damage occurs and take corrective action.

v. Failure to take corrective action, leading to similar repetitive damage, can be cause for rejection of the damaged element.

vi. Cracks that extend to the nearest reinforcement plane and fine surface cracks that do not extend to the nearest reinforcement plane but are numerous or extensive are subject to review and rejection.

g) The plant will document all test results. The quality control file will contain at least the following information:

i. Element identification

ii. Date and time of casting

iii. Concrete cylinder test results

iv. Quantity of used concrete and the batch printout

v. Form-stripping date and repairs if applicable

vi. Location/number of blockouts and lifting inserts

vii. Temperature and moisture of curing period

viii. Document lifting device details, requirements, and inserts

6. **Marking:** Permanently mark each prefabricated bridge unit with the date of casting and supplier identification. Stamp markings in fresh concrete.

7. **Handling and Storage:** Materials for this work shall be stored off the ground before, during, and after fabrication. The PBUs shall be kept free from dirt, grease and other contaminants and shall be reasonably protected from corrosion. Care shall be taken during storage, transporting, hoisting and handling of all precast sections to prevent damage. Sections damaged by improper storing, transporting or handling shall be repaired or replaced by the Contractor, as directed by the Engineer and at no cost to the State. All storage and handling operations shall be as directed by the Engineer.

8. **Special Considerations:** A dry fit of the PBUs prior to shipment is required to ensure that they can be properly joined in the field.

Method of Measurement: This work will be measured for payment by the actual area of the bridge deck fabricated and accepted. Measurements will be made across the top surface of the precast deck. The area of bridge deck shall be calculated using the length from outside face of backwall to outside face of backwall and the width of outside to outside of the concrete deck. Reinforcing bar extensions shall not be used for these measurements.

Basis of Payment: This work will be paid for at the contract unit price per square foot for "Precast Concrete/Steel Composite Superstructure", complete and accepted. Price shall include all tools, material, equipment, labor and work incidental to the construction.

Payment for work and materials described above or as noted on the plans as being incidental to the construction of the PBU shall be included in the unit price of the PBU.

Payment for the painting of the beam ends shall be included in the unit price of the PBU.

Concrete for the closure pours shall be paid for under the item “High Early Strength Concrete”.

Longitudinal rebar for the closure pours shall be paid for under the item “Deformed Steel Bars (Epoxy Coated)”.

Pay Item	Pay Unit
Precast Concrete/Steel Composite Superstructure	S.F.

ITEM #0514323A – TEMPORARY POST-TENSIONING SYSTEM

Description: Work under this item shall include installation, maintenance, removal and disposal of a temporary post-tensioning system on the portion of the existing superstructure to remain in place during Stage Construction Operations as shown on the plans or as directed by the Engineer. This system is to be installed during Stage 1 of construction and shall be removed prior to the completion of the removal of the existing superstructure in Stage 4.

This work shall also include the installation, maintenance, and removal of temporary road plates to protect the post-tensioning road and anchorages located in the roadway.

Materials: The materials for Temporary Post-Tensioning System **s**hall conform to the following requirements:

Structural Steel: The structural steel for the jacking beam and anchorage plates shall conform to AASHTO M270, Grade 50. Threaded rods for anchorages shall conform to ASTM A193, Grade B7. Post tensioning bars shall conform to ASTM A615, Standard Specification for Uncoated Plain Carbon-Steel Bars for Concrete Reinforcement with Minimum Yield Stress of 60 ksi.

Epoxy Grouting Compound: The epoxy grouting material for post-tensioning anchorages shall be a material included in the CTDOT approved products list. The material shall be adequate to develop the required shear capacity of the connected anchor as indicated on the plans.

Concrete Patching Materials: Patching materials for the restoration of the concrete sidewalk and parapet shall conform to the requirement of the specification for "High Early Strength Concrete".

Construction Methods:

1. **Shop Drawings:** The Contractor shall submit shop drawings in accordance with the requirements of Article 1.05.02 of Form 816. Approval of the shop drawings will be required prior to the ordering of the materials and the fabrication of the anchorage assemblies.

   At a minimum, the Shop Drawings shall include the following information:

   a. The stamp of the registered Professional Engineer licensed in the State of Connecticut who has reviewed and certified the shop drawings.

   b. Fabrication details for the steel anchorage assemblies.

   c. Product Data Sheets for the proposed epoxy anchorage material.

   d. Proposed Construction Sequence.

2. **Installation:** The installation of the temporary post-tensioning system shall be performed during or prior to Stage 1 construction. All work shall be performed in accordance with the Special Provisions for "Prosecution and Progress" and "Maintenance and Protection of Traffic".

   The horizontal location of the bottom layer of prestressed strands at the bottom of existing precast beams shall be located prior to the installation of the bottom anchorage plates. The contractor shall utilize a Pachometer or other nondestructive method as approved by the engineer.

   Upper and lower post-tensioning rods at a given location shall be tensioned sequentially to avoid eccentric loading on the superstructure.

   Concrete removal at the existing sidewalk and parapet shall be performed in accordance with the special provision for "Removal of Existing Masonry". Patching of the concrete surfaces shall be performed in accordance with the special provision for "High Early Strength Concrete".

   After completion of the post tensioning rod installation within the roadway pavement, the Contractor shall install temporary road plates over the installation as indicated on the plans. The contractor shall provide bituminous concrete wedges around the plate edges to provide a proper transition to the adjacent roadway surfaces.

Method of Measurement: This work will be measured for payment based on the actual number of locations post-tensioned along the superstructure. Each location shall consist of two post-tensioning rods (upper and lower) and associated materials.

Basis of Payment: This work will be paid for at the contract unit price each per "Temporary Post-Tensioning System", complete and in place, which price shall include all materials, equipment, tools, and labor incidental thereto. There shall be no separate payment for road cut, material filler, temporary road plates (including pavement transitions), concrete removal and concrete patching as they are to be included in the contract unit price.

Pay Item	Pay Unit
Temporary Post-Tensioning System	EA

ITEM #0521007A – ELASTOMERIC BEARINGS

Description: Work under this item shall consist of furnishing and installing elastomeric bearings and all necessary materials and equipment to complete the work as shown on the plans.

Materials:
Elastomeric Bearings: The elastomer shall have a shear modulus between 0.130 and 0.200 ksi and a nominal hardness of 60 on the Shore A scale. It shall conform to the requirements of Section 18.2 of the AASHTO LRFD Bridge Construction Specifications.

The internal steel laminae shall conform to ASTM A709M Grade 36 or approved equal. The laminae shall be sandblasted and cleaned of all surface coatings; rust and mill scale before bonding and shall be free of sharp edges and burrs.

The bearing shall be cast as a unit in a mold and shall be bonded and vulcanized under heat and pressure. The mold finish shall conform to standard shop practice.

Flash tolerance, finish and appearance shall meet the requirements of the latest edition of the Rubber Handbook, published by the Rubber Manufacturer's Association, Inc., RMA F3 and T.063.

The tests of the elastomer specified in Table 18.2 of AASHTO LRFD Bridge Construction Specifications shall be conducted on each lot of bearings. A shear modulus test shall be performed on each batch of material. (A lot consists of a single type of bearing of the same size, manufactured from the same batch of elastomer, submitted for inspection at the same time. A batch of elastomer is the quantity of elastomer prepared and compounded at one time).

In lieu of the low temperature crystallization test for each lot of bearings and a shear modulus test for each batch of material, the manufacturer may provide certificates from tests performed on identical formulations within the preceding year.

Every bearing shall be visually inspected for compliance with dimensional tolerance and for overall quality of manufacture. Buffing, cutting, or any other attempt to alter the size of the bearings to meet tolerances will not be permitted.

The elastomer shall meet the minimum requirements specified in Table 18.2 of AASHTO LRFD Bridge Construction Specifications for durometer hardness, tensile strength, ultimate elongation, heat resistance, compression set, ozone resistance, low temperature brittleness, low temperature stiffness and low temperature crystallization. The shear modules of the material shall be tested at 73° F using the apparatus and procedure described in Annex A of ASTM D4014

The steel laminae shall develop minimum peel strength of 5.1 k/ft. as tested in accordance with ASTM D429 Method B.

Every bearing shall be tested as follows for a Short-Duration Compression Test:

1. The bearing shall be loaded in compression to 1.5 times the design load shown on the plans. The load shall be held constant for 5 minutes, removed and reapplied for another 5 minutes.

2. The bearing shall be carefully examined while under the second loading.

3. If the bulging pattern indicates laminate parallelism or layer thickness outside of specified tolerance, or poor laminate bond, the bearing shall be rejected. If there are three or more separate surface cracks greater than 3/32" wide and 3/32" deep, the bearing shall be rejected.

A Certified Test Report in accordance with Section 1.06.07 shall be required for the specified tests on the elastomer and for the specified short duration compression tests.

Each elastomeric bearing pad shall have embossed on it the following: the word "CONN", project number, manufacturer's identification code or symbol, and the month and year of manufacture. The bearing shall also have stenciled on it, with indelible ink, the lot number, bridge number, and the bearing number. The marking shall be placed on a side of the bearing that is visible after installation.

For structures requiring less than fifty (50) pads, one test pad shall be furnished. For structures requiring more than fifty (50) pads, one extra test pad shall be furnished for each additional fifty (50) pads or part thereof. If there are two or more types of pads in one structure, and only test pad is required, the test pad will be furnished for the type of which there are the greater numbers. All test pads shall be furnished without charge.

All of the pads on one structure shall be manufactured by the same firm.

The manufacturer shall furnish facilities for the test and inspection of the competed bearing in his plant or at the independent test facility and the inspectors shall be allowed free access to the manufacturer's plant and test facility.

The load plates shall conform to AASHTO M270, Grade 50WT2.

Bolts shall conform to ASTM A325 Type 3. The bolts, nuts, and washers shall be hot-dipped galvanized in accordance with ASTM 153.

Construction Methods: Before fabricating any materials, the Contractor shall submit shop drawings to the Engineer for approval in accordance with Subarticle 1.05.02-3. These drawings shall include but not limited to the following information: the name of the manufacturer, complete details of the pads and pertinent material designations.

The bearing areas of the masonry upon which the elastomeric bearing pads are to be placed shall be carefully finished, by grinding if necessary, to a smooth, even level surface of the required

elevation, and shall show no variations from a true plane greater than 0.080 inches over the entire area upon which the elastomeric bearing pads are to rest.

After delivery of the bearings to the job site, the bearings shall be stored such that they are kept clean and dry at all times.

There shall be uniform bearing between the elastomeric bearing pad and the concrete seat after application of full dead load, there shall be uniform deflection of the elastomeric bearing pad.

Welding of the structural steel adjacent to elastomeric bearing pads shall not be permitted.

The elastomeric bearings shall be installed when the ambient air temperature has been within the range of 32°F - 81°F for a period of at least two hours.

Method of Measurement: This work will be measured for payment by the number per each of elastomeric bearings, installed and accepted.

Basis of Payment: This work will be paid for at the contract unit price per each of "Elastomeric Bearings", complete, in place, which price shall include furnishing and installing elastomeric bearing assemblies (including vulcanized load plates), and all materials, equipment, tools and labor incidental thereto.

The sole plates and filler plates (including bolts, nuts and washers) will be included in the contract unit price for "Precast Concrete/Steel Composite Superstructure".

Grinding of the concrete bridge seat shall be paid for "Modify Concrete Bearing Pad".

Pay Item	Pay Unit
Elastomeric Bearings	EA

ITEM #0522178A – CONSTRUCT CONCRETE KEEPER BLOCKS

Description:

This item shall consist of constructing a concrete keeper block including drilling and grouting of reinforcing steel into the existing concrete substructure and the furnishing and placing of reinforcing steel, structural steel, welded studs and concrete. This work shall be done as indicated on the plans, in accordance with these specifications, and as directed by the Engineer.

Materials:

The materials shall conform to the following requirements:

1. The steel keeper plates shall conform to ASTM A36. Steel for welded studs shall conform to the requirements of Subarticle M.06.02-12.

2. The chemical anchor material shall be a resin compound specially formulated to anchor steel bars in holes drilled into concrete for the purpose of resisting tension pull-out. The chemical anchor material shall conform to Subarticle M.03.01-15 of the Standard Specifications.

3. Concrete shall be a Contractor design mix which achieves a minimum 28 day strength of 4000 psi.

4. Reinforcement shall conform to ASTM A615, Grade 60.

5. The steel keeper plates shall be galvanized after fabrication and welding of the studs in accordance with ASTM A123.

A Materials Certificate shall be required for the chemical anchor material and the steel keeper plates in accordance with Article 1.06.07, certifying the conformance of these materials to the requirements stated herein.

All materials shall be approved by the Engineer before use.

Construction Methods:

Before fabricating any materials, the Contractor shall submit shop drawings to the Engineer for review in accordance with Article 1.05.02(b). These drawings shall include but not be limited to the following: Location and sizes of all reinforcing steel including splice lengths, steel plates and studs, material lists and material designations.

Additionally, the Contractor shall submit the following to the Engineer for approval: type of drill, diameter of bit, method of cleaning holes, and method of placement of the chemical anchor material. Specifications and recommendations for the aforementioned may be obtained from the manufacturer of the chemical anchor material. The weight of the drill shall not exceed twenty pounds.

The installation of the keeper blocks shall be done after the two adjacent elastomeric bearings have been installed.

Holes shall be drilled into the concrete at the locations shown on the plans.

Drilling methods shall not cause spalling, cracking, or other damage to the concrete. Those areas damaged by the Contractor shall be repaired by him in a manner suitable to the Engineer and at no expense to the State.

The reinforcing steel and chemical anchor material shall be installed in the holes in accordance with the manufacturer's recommendations.

If existing reinforcing bars are encountered during the drilling operation, the hole shall be relocated to clear the existing reinforcing as directed by the Engineer. Uncompleted holes shall be filled with the chemical anchor material and finished smooth to the contour of the surrounding concrete surface. Care shall be taken not to damage exposed reinforcing bars.

The surface on which the concrete keeper is to be poured shall be intentionally roughened to a depth of ¼".

Fabrication and placement of reinforcing steel shall conform to the requirements of Article 6.02.03.

The installation of welded studs shall be in accordance with the requirements of Article 5.08.03.

Mixing, placing, curing, and finishing of the concrete shall be in accordance with Article 6.01.03.

The Contractor, as directed by the Engineer, shall take adequate precautions to prevent any materials from dropping to the area below, which may result in damage to any existing construction or to adjoining property. Should any damage occur to the structure as a result of the Contractor's operations, the Contractor shall make repairs at his own expense. The repair work shall be approved in advance and shall be of a quality acceptable to the Engineer.

At no time during the Contractor's work will interruption in traffic carried by the structure be permitted solely as a result of constructing the keeper block.

Method of Measurement:

This work will be measured for payment by the number of concrete keeper blocks, as described above, completed and accepted by the Engineer.

Basis of Payment:

This work will be paid for at the contract unit price each for "Construct Concrete Keeper Blocks", complete in place, which price shall include drilling and grouting reinforcing steel, furnishing and placing reinforcing steel, keeper steel plates and welded studs, concrete, and all materials, equipment, tools and labor incidental thereto.

ITEM #0601016A – PRECAST APPROACH SLAB

Description: Work under this item shall include the fabrication, delivery, temporary bracing and installation of precast concrete approach slabs, including all necessary materials and equipment to complete the work, as shown on the plans. The substitution of cast-in-place concrete will not be allowed.

Due to the accelerated nature of this project, all approach slabs shall be manufactured and approved prior to the initiation of the full roadway closure at the site.

Materials: The materials for precast approach slabs shall conform to the following requirements:

Concrete shall meet the requirements of Article M.03.01 of Form 816, for Class "F" Concrete and shall have a minimum 28-day compressive strength of 4,400 psi. All cement shall meet the requirements of ASTM C 10 Type I. Air content shall be between 5% and 7%. The use of calcium chloride or an admixture containing calcium chloride will not be permitted.

Reinforcing steel shall be epoxy coated and conform to the requirements of Article M.06.01 of Form 816.

All fixtures and hardware cast into precast concrete slabs shall have a corrosion-resistant coating or be fabricated from a non-corrosive material suitable for the intended use. The coating shall be galvanizing that is applied by the hot-dip process. All hardware shall be as specified on the Assembly Plan.

Materials for leveling devices or non-metallic shims for setting the precast slabs to proper grade during installation shall comply with the applicable sections of Form 816, for the specific materials used.

Controlled density fill, if required for precast approach slab installation, shall be a self-compacting, flowable mixture of aggregate and cementitious material containing sufficient Portland cement to develop a 6 hour compressive strength of 100 psi. The contractor shall be responsible for producing a flowable mixture using these guidelines and adjusting the mixture design as called for by the circumstances or as directed by the Engineer. A mix design shall be submitted for this material, stating the percentage of each component to be utilized. The maximum aggregate size shall be 3/8". The amount of material passing a No. 200 sieve shall not exceed 12 percent. No plastic fines shall be present. The total calculated air content shall not exceed 30 percent. Substantive data that demonstrates the ability of the material to meet the specification requirements for controlled density fill shall be submitted with the proposed mix design at least two weeks prior to its use.

Construction Methods: A Department Certified Precast Concrete Plant or a pre-qualified on-site precaster shall be used for the precast approach slabs.

1. **Shop Drawings:** The Contractor shall submit shop drawings in accordance with the requirements of Article 1.05.02 of Form 816. Approval of the shop drawings will be required prior to the ordering of the materials and the fabrication of the approach slabs. The width of each precast approach slab shall be determined by the Contractor.

   At a minimum, the Shop Drawings shall include the following information:

   a. The stamp of the registered Professional Engineer licensed in the State of Connecticut who has reviewed and certified the shop drawings.

   b. All lifting inserts, hardware, or devices and locations for Engineer's approval.

   c. Locations and details of the lifting devices, including supporting calculations, type, and amount of any additional reinforcing required for lifting. All lifting devices will be designed based on the no cracking criteria in Chapter 8 of the PCI Design Handbook (seventh edition).

   d. Dimensions from working points or working lines to prevent the accumulation of dimensional tolerances. The width of each individual slab along with the width of the closure pour shall be determined such that, when pieces are laid together, the approach slab sections shall satisfy the required approach slab total width and cross slopes shown on the plans.

   e. The minimum compressive strength attained prior to handling the approach slab.

   f. Details of leveling devices or vertical adjusting hardware.

   g. Reinforcement details in accordance with Subarticle 6.02.03-1 of Form 816.

   h. Locations/spacings of openings for flowable fill installation

2. **Assembly Plan:** The Assembly Plan is a document prepared by the Contractor and a qualified Engineer with specific knowledge of the Contractor's equipment and "means and methods" for constructing the precast elements required to complete the work on the project. The development of the Assembly Plan is closely linked to the schedule of operations and the interim material strengths necessary for the work to progress. The Contractor needs to be involved with any required modifications to the shop drawings so that he can incorporate these into the development of the Assembly Plan.

   The Assembly Plan will be reviewed by both the Engineer of Record and the District Construction personnel similar to a Working Drawing. The approved Assembly Plan will serve as the governing specification with respect to progressing with construction prior to components achieving the final required material strengths as stated in Form 816. Approval of the Assembly Plan will be required prior to the start of the closure of the roadway.

Under no circumstances shall the fabrication of the precast concrete approach slabs commence prior to the approval of the Shop Drawings and the Assembly Plan unless written permission is given by the Engineer. The Department shall reject any components fabricated before receiving written approval or components that deviate from the approved drawings.

Any expenses incidental to the revision of materials furnished, in accordance with the Shop Drawings and order lists, to make them comply with the plans and specifications, including costs incurred due to faulty detailing or fabrication, shall be borne by the Contractor.

At a minimum, the Assembly Plan shall include the following information:

a. Details and/or cut sheets of all equipment that will be employed for the assembly of the approach slabs.

b. Details of all equipment to be used to lift approach slabs including cranes, excavators, lifting slings, sling hooks, and jacks. Crane locations, operating radii, and lifting calculations. The factors of safety for the lifting of slabs will be achieved by using 125% of the weight of the slab being lifted in the calculations.

c. A procedure for handling and erection including bracing requirements based on Chapter 8 of the PCI Design Handbook (seventh edition). Calculations shall be prepared for the lifting and handling in accordance with the no discernible cracking criteria and shall be submitted as part of the Assembly Plan. Lifting hook locations and hardware should be coordinated with the Fabricator.

d. A statement of compliance with all requirements of applicable environmental permits.

e. A work area plan, depicting all affected utilities, drainage, and protective measures that will be employed throughout the construction activities.

f. Full size 22”x34” sheets depicting the assembly procedures for the precast approach slabs.

g. A detailed schedule with a timeline for all operations. In development of the schedule the Contractor shall account for setting and cure time for concrete closure pours.

h. Methods of providing temporary support of the approach slabs. Include methods of adjusting and securing the slab after placement.

i. Procedures for controlling erection tolerances for both the horizontal and vertical direction.

j. Methods of forming closure pours.

k. Procedures for placement of flowable fill below approach slab

l. The Assembly Plan shall be bound into one complete document and shall be prepared and stamped by a registered Professional Engineer licensed in the State of Connecticut.

3. **Forms:** Forms shall be mortar tight and strong enough to prevent misalignment of approach slab edges. They shall be constructed to allow their removal without damage to the concrete. A positive means of supporting reinforcing cages in place during forming shall be required.

   The forms shall not be removed until the concrete is strong enough to avoid possible injury from such removal. A minimum compressive strength of 500 psi shall be obtained prior to stripping the form. Forms shall not be removed without approval being granted by the Engineer. All forming materials used for casting cylindrical openings for lifting holes shall be removed. Do not place concrete in the forms until the Engineer has inspected the forms and approved all the materials in the precast slabs.

4. **Placing Concrete:** Provide to the Engineer a tentative casting schedule at least two weeks in advance to make inspection and testing arrangements. Concrete shall not be deposited in the forms until the Engineer has inspected the placing of the reinforcing steel, and other cast-in- place components, and has given his approval thereof.

   The mix shall be proportioned and mixed in a batch mixer to produce homogeneous concrete. At no time will truck-mixed or transit-mixed concrete be allowed. The concrete temperature shall be 60° F to 90° F at the time of placement.

   Concrete shall not be deposited into the forms when the ambient temperature is below 40° F or above 100° F, unless adequate heating or cooling procedures have been previously approved by the Engineer. Production during the winter season, from November 15 to March 15 inclusive, will be permitted only on beds located in a completely enclosed structure of suitable size and dimension that provides a controlled atmosphere for the protection of the casting operation and the product. Outside concreting operations will not be permitted during rainfall unless the operation is completely under cover.

   Void forms shall be held in place against uplift or lateral displacement during the pouring and vibrating of the concrete by substantial wire ties or other satisfactory means as approved by the Engineer. The concrete shall be vibrated internally, or externally, or both, as ordered by the Engineer. The vibrating shall be done with care in such a manner as to avoid displacement of reinforcing steel, voids, forms, or other components. There shall be no interruption in the pouring of any of the sections. Concrete shall be carefully placed in the forms and vibrated sufficiently to produce a surface free from imperfections such as honeycombing, segregation, cracking, or checking. Any deficiencies noted in the sections may be cause for rejection.

5. **Finishing:** Finish the precast slabs in accordance with Subarticle 6.01.03-9 of Form 816.

Trowel-finish the top surface of all precast approach slabs. Formed surfaces shall not be finished in any specific manner except as noted below. All fins, runs, or mortar shall be removed from surfaces which will remain exposed. Form marks on exposed surfaces shall be smoothed by grinding.

6. **Test Cylinders:** During the casting of the sections, the Contractor shall make test cylinders under the supervision of a representative of the State. A minimum of 4 cylinders shall be taken during each production run or as ordered by the Engineer. The dimensions and type of cylinder mold shall be as specified by the Engineer. Cylinders shall be cured under the requirements of ASTM C31 and shall be used to determine the 28 day compressive strength requirements (f'c). Failure of any of the 28 day tests cylinders to meet 90% of the minimum compressive strength requirement may be cause for rejection. The Engineer also reserves the right to request and test core specimens from the sections to determine their adequacy.

7. **Curing:** The precast slabs will be continuously wet cured for 7-days, commencing immediately after final finishing with all exposed surfaces covered. The precast slabs will have minimum cure of 14 days prior to placement. Test data such as slump, air content, or unit weight for fresh concrete and compressive strengths for the hardened concrete after 7, 14, and 28 days, shall be submitted to the Engineer.

8. **Patching:** The Engineer shall evaluate the acceptability and the cause of the defects and the service condition of the precast approach slab section. No repairs shall be done by the Contractor unless permission has been granted by the Engineer. The Contractor shall submit to the Engineer for review, the proposed methods and materials to be used in the repair operation. All repairs shall be sound and properly finished and cured before the precast elements are delivered to the job site. The Contractor shall bear the costs of all repair work.

9. **Installation:** The installation of the precast approach slabs shall proceed as required by the approved Assembly Plan and in accordance with the special provisions "Prosecution and Progress" and "Maintenance and Protection of Traffic". The approach slab sections shall be placed in a manner to best accommodate and facilitate the accelerated construction sequence. The approach slab sections shall be set to the grade indicated on the plans or as directed by the Engineer. The following is the general procedure for installing the approach slabs:

    a. Review the approved Assembly Plan. If changes are warranted due to varying site conditions, resubmit the plan for review and approval.

    b. Establish working points, working lines, and benchmark elevations prior to placement of all elements.

    c. Lift approach slab segments using lifting devices as shown on the shop drawings.

    d. Set approach slabs in the proper horizontal location in the sequence and according

to the methods outlined in the Assembly Plan.

e. Check for proper alignment and grade within specified tolerances. Survey the top elevation of the approach slab. Adjust vertical leveling devices prior to full release of the approach slab from the crane. This will reduce the amount of torque required to turn the bolts in the leveling devices. Check for proper grade within specified tolerances.

f. Pour or pump controlled density fill under the approach slab as shown on the plans. Start from the center of the approach slab and proceed toward the outside edges.

g. All fixtures or holes cast into the sections for lifting, anchoring, or seating shall be neatly filled with non-shrink grout. The finished surface shall be flush and smooth with the adjacent concrete.

10. Quality Control: At a minimum, the following requirements shall be met:

a. All precast approach slabs shall be fabricated by a PCI certified fabricator that is approved by the Department with a minimum certification of "B1".

b. Cracking or damage of precast approach slabs will be prevented during handling and storage.

c. Defects and breakage of precast elements will be repaired or the slab replaced, as follows:

i. Members that sustain damage or surface defects during fabrication, handling, storage, hauling, or erection are subject to review or rejection.

ii. Approval shall be obtained before performing repairs.

iii. Repair work must re-establish the elements' structural integrity, durability, and aesthetics to the satisfaction of the Engineer.

iv. The cause will be determined when damage occurs and corrective action will be taken.

v. Failure to take corrective action, leading to similar repetitive damage, can be cause for rejection of the damaged element.

vi. Cracks that extend to the nearest reinforcement plane and fine surface cracks that do not extend to the nearest reinforcement plane but are numerous or extensive are subject to review and rejection.

vii. Full depth cracking and breakage greater than one foot are cause for rejection.

d. Precast elements will be constructed to tolerances shown on the plans. Where tolerances are not shown, follow tolerance limits in the PCI MNL116-99, "Manual for Quality Control for Plants and Production of Structural Precast Concrete Products, 4th Edition".

e. The plant will document all test results. The quality control file will contain at least the following information:

   i. Element identification.

   ii. Date and time of cast. Concrete cylinder test results.

   iii. Quantity of concrete used and the batch printout.

   iv. Form-stripping date and repairs if applicable.

   v. Location/number of blockouts and lifting inserts.

   vi. Temperature and moisture of curing period.

   vii. Document lifting device details, requirements, and inserts.

f. The Contractor will be required to perform strength testing of materials prior to proceeding to the next stage of construction. The strength achieved at the time of testing will be required to meet the value in the approved Assembly Plan. The Contractor should not rely solely on cylinder breaks by Department personnel as the schedules for testing by the Department will not be changed. The Contractor will provide this testing at his/her own expense and shall take the required number of cylinders or cubes in the event that the material does not gain strength as anticipated.

11. Marking: Permanently mark each precast approach slab with the date of casting and supplier identification. Stamp markings in fresh concrete.

12. Special Considerations: Dry fit adjacent elements in the shop, including approach slabs and Precast Bridge Units (PBUs).

13. Handling and Storage: Care shall be taken during storage, transporting, hoisting and handling of all precast sections to prevent damage. Sections damaged by improper storing, transporting or handling shall be repaired or replaced by the Contractor, as directed by the Engineer and at no cost to the State. All storage and handling operations shall be as directed by the Engineer.

The precast sections shall not be removed from their casting beds until the concrete has attained the minimum compressive strength determined by the Contractor and approved by the Engineer. Precast sections shall not be shipped to the job site until the 28 day strength

(f'c) has been attained. Provide to the Engineer a delivery schedule at least two weeks in advance of the shipment of precast slabs to the job site.

Method of Measurement: This work will be measured for payment as the actual area of precast concrete approach slabs fabricated, cured and accepted. Measurements will be made across the top surface of the slabs.

Basis of Payment: This work will be paid for at the contract unit price per square yard for "Precast Approach Slab", complete and in place, which price shall include all materials, equipment, tools, labor and work incidental to the fabrication, transport and installation. There shall be no separate payment for: projecting reinforcing steel in closure pours, forms, polyethylene sheets, leveling devices, shims, roofing felt, controlled density fill or any other component or material used for the work, as they are to be included in the contract unit price. Concrete for the closure pours shall be paid for under the item "High Early Strength Concrete".

Pay Item	Pay Unit
Precast Approach Slab	SY

ITEM #0601070A – CLASS "S" CONCRETE

Work under this item shall conform to Section 6.01 – Concrete for Structures as supplemented and amended to provide for a Class "S" superplasticized concrete.

Description: Add the following

Class "S" Concrete shall be used to fill and repair voids in horizontal and vertical surfaces of concrete areas where reinforcing steel is exposed and the area of deterioration is larger than one square foot (after removal of deteriorated concrete) as detailed on the plans and/or as directed by the Engineer.

Work under this item shall consist of surveying the existing concrete surfaces of the structures including abutments and piers to be repaired with this material, locating and removal of loose concrete, deteriorated concrete and concrete overlaying hollow areas; patching these areas as well as spalled and scaled areas, with Class "S" Concrete formed to the original contour. The work shall also include sandblasting and cleaning areas to be patched and filled, and any exposed reinforcing steel, prior to placing the concrete. Exposed reinforcing shall have a zinc primer applied prior to placing the patch material.

The Contractor shall not perform any repair work without prior approval of the Engineer for location, limits and types of repairs.

Materials: Portland cement materials shall conform to section M.03 as modified herein.
Add the following

The single component zinc primer shall be one of the following:

Kolor-Zinc No. 0100
Manufactured by: Keeler & Long, Inc.
856 Echo Lake Road
Watertown, CT 06795

Carboline 676
Manufactured by: Carboline
350 Hanley Industrial Court
St. Louis, MO 63144

Zinc Plate 49 Organic Primer
Manufactured by: Con-Lux Coating, Inc.
Tallmadge Road, Box 847
Edison, NJ 08818

Certification: A Materials Certificate and a Certificate of Compliance shall be required for the zinc primer in accordance with Article 1.06.07, certifying the conformance of this material to the requirements stated herein.

M.03.01 – Component Materials: is supplemented as follows:

Coarse Aggregate: is supplemented with the following:

Gradation: Coarse aggregate for the Class "S" Concrete shall meet the following gradation requirements: the required grading shall be obtained by using 100% No. 8 coarse aggregate.

Cement: Add the following:

Type I or II Portland Cement shall be used for Class "S" Concrete.

Admixtures: is amended and supplemented as follows:

Other Chemical Admixtures: add the following:

The superplasticizer admixture shall be a high-range water reducer (HRWR) capable of increasing the slump of the mix from approximately 2.25 to 7 inches upon the addition of the amount recommended by the respective manufacturer. The HRWR shall conform to ASTM C494 Type F or Type G and shall be approved by the Engineer. The use of this material shall be in strict accordance with the respective manufacturer's written instructions and procedures.

M.03.02 – Mix Design Requirements: is supplemented to include Class "S" superplasticized concrete

Type	Proport. By Wt. Approx.	Water per Bag Gallons, Max.	Cem. Fact. Bags/Cu. Yd.
Class "S"	1:2.16:2.20	5.7	7.0

M.03.04 - Curing Materials: is supplemented as follows:

Liquid Membrane-Forming Compound: add the following:

No liquid membrane-forming compound shall be used for Class "S" Concrete.

Construction Methods: is supplemented with the following text.

Where this specification deviates from the Section 6.01 Special Provisions, the intent of this text shall govern.

Composition: Add the following:

Class "S" Concrete shall conform to the requirement as specified in M.03.01 as amended herein. Class "S" Concrete shall contain not less than 6.5 percent and not more than 8.5 percent entrained air at the time of placement.

The Class "S" Concrete shall have a minimum 3000 psi compressive strength at 28 days.

Consistency: Add the following:

Class "S' Concrete shall have a slump range of 2 to 4 inches prior to the addition of the HRWR and from 6 to 8 inches slump after the addition of the HRWR. The addition rates of the air entraining admixture (A.E.A.) and the HRWR will vary. Frequent field testing of the air content and slump prior to and after addition of the HRWR will be the determining factor of actual addition rates for each admixture.

Mixing Concrete: Add the following:

For hand mixing of Class "S Concrete, the Contractor shall provide scale(s) approved by the Engineer in which cement and aggregate can be accurately weighed for the required mix proportions.

The Contractor shall also have measuring graduates marked in ounces for the proportioning of the A.E.A. and the HRWR. Do not mix A.E.A. and the HRWR together before adding to the mix; the resultant solution will not work. Do not add the A.E.A, and the HRWR at the mixer simultaneously; these admixtures must be added separately in the mixing cycle. All manufactured materials shall be stored, mixed and used in strict accordance with the written recommendations of the respective manufacturers.

Curing Concrete: Add the following:

Concrete shall be cured leaving forms on for seven (7) days and wetting them frequently.

Material Storage: The Contractor shall store and maintain the A.E.A. and the HRWR materials in clean original containers as delivered by the manufacturer.

Repair Procedure: Before any deteriorated concrete is removed, the Engineer shall perform an inspection to determine the exact limits and locations of the all areas to be repaired under this item. The limits of each area to repair shall be suitably marked.

Loose and deteriorated concrete shall be chipped away back to sound concrete. The exposed surfaces shall be thoroughly sandblasted and vacuumed immediately prior to forming.

Hollow areas in the existing concrete shall be completely exposed by chipping away back to sound concrete and thoroughly sandblasted and vacuumed immediately prior to forming.

Spalled and scaled areas shall be cleaned of all loose and deteriorated concrete. The exposed surfaces shall be thoroughly sandblasted and vacuumed immediately prior to forming.

All surfaces of exposed concrete and reinforcing steel shall be free of oil, solvent, grease, dirt, dust, bitumen, rust, loose particles and foreign matter. Prior to sandblasting of concrete and steel surfaces, all petroleum contamination on these surfaces shall be removed by appropriate solvent or detergent cleaning operations.

Extreme care shall be taken where reinforcing steel is uncovered not to damage the steel or its bond in the surrounding concrete. Pneumatic tools shall not be placed in direct contact with reinforcing steel. Maximum 30 lb. size hammer shall be used for general chipping and removal, while maximum 15 lb. size shall be used behind reinforcing steel. Exposed reinforcing shall remain in place except where specifically indicated for removal or modification by direction of the Engineer. Exposed reinforcing steel shall be sandblasted in accordance with SSPC-SP6, Commercial Blast Cleaning, to remove all contaminants, rust and rust scale.

The exposed cleaned reinforcing steel shall be coated with the single component zinc primer by brush. All application of the zinc primer shall be in accordance with the manufacturer's printed instructions.

For this special provision, unless shown otherwise, the depth of removal shall be a minimum of ¾ inch below or behind the reinforcing steel.

Where the existing reinforcing steel is severely corroded or damaged, it shall be cut out and replaced with new reinforcing steel of the same size and spacing. Where existing steel is determined by the Engineer to have insufficient cover, it shall be either replaced or adjusted as directed. New steel shall be attached behind existing steel with a minimum length for lap spliced as directed by AASHTO or as directed by the Engineer. Concrete shall be removed to a minimum depth of ¾ inch behind the new steel.

When using sandblasting equipment, all work shall be shielded for the protection of the public.

Adequate measures shall be taken by the Contractor to prevent concrete chips, tools, and/or materials from entering into adjacent roadway lanes or dropping to areas below the structure. All

debris shall be promptly swept up and removed from the site. The Contractor shall satisfactorily dispose of all materials removed.

All excavated areas on vertical surfaces of concrete members shall be formed using forms coated with a plastic or similar film to preclude the use of form release agents. Forms and supports systems shall be properly designed in accordance with Article 6.01.03. Forms shall be so designed that placement access shall be allowed at the top of each respective formwork assembly for contiguous void areas.

No bonding compounds shall be used before or during the placement of this concrete material. Concrete surfaces against which this material is to be placed shall be sound, tight, and thoroughly roughened by the removal and sandblasting procedures specified above. The exposed concrete surfaces shall be dampened with fresh water immediately prior to placement of the fresh concrete by "hosing" down the areas behind the forms as thoroughly as possible.

Placement of the fresh concrete shall be in the maximum height lifts possible under the circumstances and all freshly placed concrete shall be consolidated during placement with adequately sized and effective vibrators.

Following curing and stripping, the exposed faces of new concrete shall be finished off with the use of the appropriate tools to blend in the physical appearance to the surrounding areas as much as possible.

Cured patches shall be sounded by the Engineer to detect the presence of any hollow spots, Such spots shall be removed and replaced by the Contractor at no cost to the State until the work is found to be acceptable to the Engineer.

Method of Measurement: Add the following

Class "S" Concrete shall be measured for payment by the actual volume in cubic yards of concrete placed and accepted by the Engineer. Reinforcing steel will not be measured for payment.

Basis of Payment: Add the following:

Concrete: Add the following:

Class "S" concrete will be paid for at the contract unit price per cubic yard for "Class 'S' Concrete", complete in place, which price shall include locating and removing unsound material, sandblasting, cleaning, zinc primer coating, forming, placing, curing, stripping and finishing new concrete, and all materials, equipment, tools, labor and clean-up incidental thereto.

ITEM 0601107A – HIGH EARLY STRENGTH CONCRETE

Work under this item shall conform to Section 6.01 Concrete for Structures as supplemented and amended herein to provide for High Early Strength Concrete.

6.01.01 – Description: Add the following

High early strength concrete shall be used to accelerate the construction of the bridge. The goal of this work is:

- Meet the required minimum compressive strength in an accelerated manner.
- Reduce the cure time for the concrete
- Provide durable (low permeability) concrete
- Provide low shrinkage properties to reduce cracking in the field

The Contractor shall develop a high early strength concrete mix design for use in the longitudinal closure pours and backwall dowel pockets. This high early strength concrete may also be used in other cast-in-place concrete work.

6.01.02 – Materials: Add the following:

The high early strength concrete shall conform to the requirements of M.03.01 and the following criteria:

1. Portland cement shall be Type II, IIA or III conforming to AASHTO M85 or M240, as appropriate.
2. All cement used in the manufacture of the members shall be the same brand, type and color, unless otherwise permitted.
3. Use Portland cement conforming to AASHTO M85 with compatible admixtures and air entraining agent.
4. Water-cementitious material ratio shall not exceed 0.4 by weight, including water in the admixture solution and based on saturated surface dry condition of aggregates.
5. Use a maximum size coarse aggregate of ¾”.
6. The amount of entrained air shall be 6.0 +/- 1.5%.
7. High early strength concrete shall achieve the early minimum compressive strength indicated on the plans, by the time that the bridge is opened to traffic.
8. The early strength characteristics of the concrete shall be commensurate with the intended construction procedure that is developed by the Contractor in the PBU and Approach Slab Assembly Plans.
9. The minimum final design (28 day) compressive strength shall not be less than 4400 psi.
10. A shrinkage reducing admixture shall be added to the concrete mix according to the manufacturer’s recommendation such that there will be no cracks at 14 days in the sample tested in AASHTO T334 (see below). A shrinkage reducing admixture shall be tested by an approved testing lab and meet the requirements of ASTM C494-10 Type S, except that in Table 1 length change shall be measured as: Length Change (percent of control) shall be a minimum of 35% less than that of the control. Table 1 Length Change (increase over control) shall not apply. Shrinkage reducing admixtures shall not contain expansive metallic materials.

11. The maximum allowable total chloride content in concrete shall not exceed 0.1% by weight of cement.

Mix Design Requirements
Concrete shall be controlled, mixed, and handled as specified in the pertinent portions of Section 6.01 Concrete for Structures, Supplemental Specifications and as indicated below:

The Contractor shall design and submit for approval the proportions and test results for a concrete mix which shall attain the minimum final design compressive strength and the early compressive strength as defined by the approved Assembly Plan and consistent with the approved Quality Control Plan.

The concrete mix design shall have a rapid chloride ion permeability of 2000 Coulombs at not more than 28 days using AASHTO T 277 and the air entrainment shall be targeted at a value of 6.5 percent +/-1.5 percent. Contractor may opt to take multiple tests prior to 28 days which will be considered accepted once the target value of 2,000 coulombs is reached. Testing shall be in accordance with AASHTO T 119 and T 152. Multiple samples should be tested using the intended curing methods in order to establish the required cure times for the mix.

Should a change in sources of material be made, a new mix design shall be established and approved prior to incorporating the new material. When unsatisfactory results or other conditions make it necessary, the Department will require a new mix design.

The concrete mix design shall be submitted to the Department for review and approval. The Department shall be notified at least 48 hours prior to the test batching and shall be present to witness the testing.

All tests necessary to demonstrate the adequacy of the concrete mix shall be performed by the Contractor, witnessed by the Department, including, but not limited to: slump, air content, temperature, initial set and final set (AASHTO T197). Compressive strength tests shall be determined on field cured cylinders (6” X 12” cylinders) at 9 hours, 12 hours, 15 hours, 18 hours, 24 hours, 30 hours, 36 hours, 42 hours, 2 days and 3 days, and standard cured cylinders at 7 days and 28 days. Additionally, a confined shrinkage test as outlined in the AASHTO T334 - Practice for Estimating the Crack Tendency of Concrete shall be performed by an AASHTO accredited laboratory. The results of these tests (documenting zero cracks at 14 days) shall be submitted to the Department.

Field Trial Placement
In addition, a trial placement shall be done a minimum of (90) ninety days before the intended date of the initial closure pour placement. The Contractor will be required to demonstrate proper mix design, batching, placement, finishing and curing of the high early strength concrete. The trial placement shall simulate the actual job conditions in all respects including plant conditions, transit equipment, travel conditions, admixtures, forming, the use of bonding compounds, restraint of adjacent concrete, placement equipment, and personnel.

The trial shall also demonstrate the ability of the concrete to accept the installation of the membrane waterproofing system that is to be used. A representative portion of the trial concrete shall be coated with the membrane waterproofing in accordance with the specifications for the waterproofing. The timing of the installation of the waterproofing on the trial concrete shall be commensurate with the intended construction procedure and schedule that is developed by the Contractor. The Contractor shall demonstrate that the waterproofing meets all the requirements of the specifications.

The details for the trial placement configuration are shown in Figure 1. Acceptance criteria for the trial placement shall be as follows:

- The trial placement concrete shall not exhibit cracking or separation from the test panel in excess of 0.016 inches wide
- There shall be no more than one transverse crack in excess of 0.010 inches wide in the 10 foot long pour.
- The evaluation of the trial placement shall take place 14 days after placement.

If the trial placement fails these criteria, the Contractor will be required to submit a corrective action plan on how repairs of these crack sizes will be performed. The Department may require the Contractor to conduct more trial batches and trial placements. The costs of trial batches, trial placements and the removal of trial placement concrete from the job site is incidental to the work and will not be measured for payment. The requirement for multiple test placements shall not be cause for a time extension.

The final accepted trial placement testing shall be used to establish the final acceptance testing protocol for the field placements.

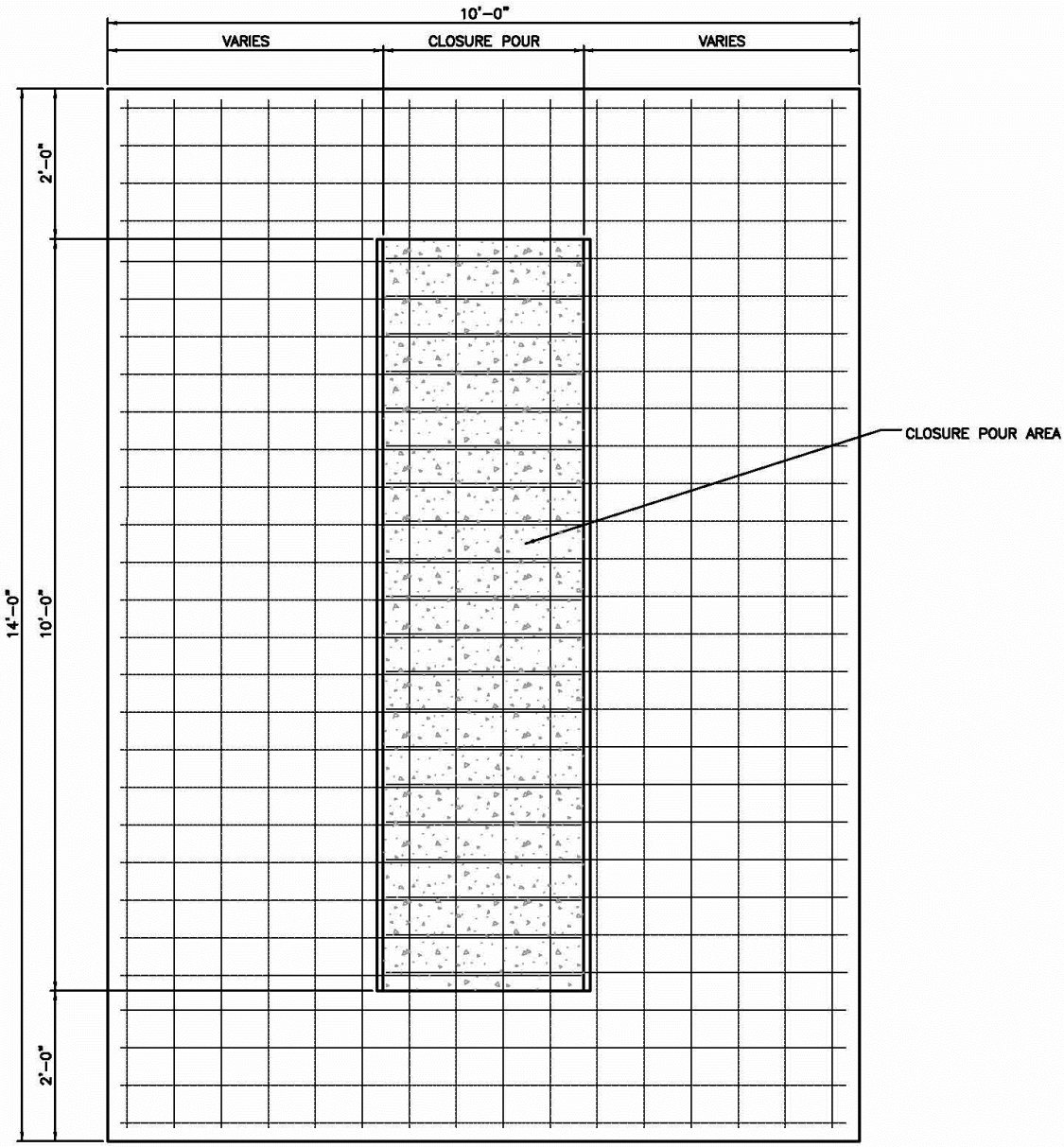

TYPICAL SECTION

FIGURE 1 – TRIAL PLACEMENT TEST SET-UP

6.01.03 Construction Methods: Add the following:

The Contractor shall engage an AASHTO accredited laboratory to provide testing facilities which are qualified laboratories under the NETTCP program to perform all Quality Control field testing. All personnel performing tests shall be qualified NETTCP Concrete Technicians and certified ACI Laboratory and Concrete Strength Technicians. Anytime the Contractor moves the laboratory, all associated equipment shall be recalibrated. This requirement is intended to minimize the movement of test cylinders.

The Contractor is required to perform initial set and final set tests (AASHTO T197) in addition to slump, air content and temperature on concrete from each concrete truck used in the placing of this High Early Strength Concrete. Field cured cylinders (6" X 12" cylinders) will be made from the first and last concrete trucks. A set of three (3) field- cured cylinders shall be made for each informational test associated with early structural loading. The Contractor is advised to fabricate adequate sets of cylinders to allow multiple tests to verify field concrete strength. The Department shall be allowed to witness the test and comment on all the tests performed by the Contractor. The Contractor shall not open the roadway to traffic until the minimum compressive strength has been met and when the Department has directed that the roadway can be opened to traffic.

All testing and equipment shall conform to AASHTO T-22, and the making and curing of concrete cylinders shall conform to AASHTO T23. All costs associated with the on-site mobile testing facilities, personnel and field testing, equipment calibration and verification to demonstrate the field concrete strength shall be incidental to the work.

Acceptance tests will be performed by the Department on standard cured cylinders at 7 days and 28 days. Cylinder breaks at 3 days and 7 days must be at least 10% above the approved trial batch results. The Contractor will be notified of any verification tests that do not meet these requirements and will be required to develop a contingency corrective action plan incase final strength is not achieved. Concrete will be accepted based on meeting the 28-day strength requirement of 4000 psi.

Curing Methods
The concrete curing methods shall be developed by the Contractor as part of the Quality Control Plan. The curing method shall allow for the application of traffic on the concrete prior to full curing without compromising the desired final properties and the durability of the finished product. The curing methods used in the production placements shall be the same as the curing methods used for the trial placement.

High Early Strength Concrete Crack Inspection
The Contractor shall inspect the finished high early strength concrete surface for cracks. Inspection of the deck for cracking shall be completed prior to the preparation of the deck for placement of the membrane waterproofing system.

The Contractor shall document the location and frequency of cracks on the closure pours (number of cracks per square foot). Cracks greater than 0.016 inches in width shall be repaired as required by the membrane waterproofing manufacturer

Basis of Payment: Add the following

The work completed under this Item will be paid for at the contract price per actual number of cubic yards of high early strength concrete that is measured complete in place. Payment under this Item includes full compensation for all testing and approval of the mix design.

Pay Item	Pay Unit
High Early Strength Concrete	C.Y.

ITEM #0601323A – MODIFY CONCRETE BEARING PAD

Description: Work under this item shall consist of grinding the bearing areas of the concrete bridge seat upon which the elastomeric bearing pads are to be placed to a smooth even level surface.

Construction Methods: Bridge seat bearing areas shall be considered to be those areas of the concrete abutment stem that support the steel reinforced elastomeric bearings. The limits of the bridge seat bearing area shall extend 1" (+/-) outside of the perimeter of the elastomeric bearing that is in contact with the bridge seat.

The bearing areas shall be carefully finished by grinding to a smooth, even level surface of the required elevation as shown on the plans, and shall show no variations from a true plane greater than 0.080 inches over the entire area upon which the elastomeric bearing pads are to rest.

There shall be uniform bearing between the elastomeric bearing pad and the concrete seat after application of full dead load, there shall be uniform deflection of the elastomeric bearing pad.

Method of Measurement: This work will be measured for payment by the number per each location finished smooth and accepted.

Basis of Payment: This work will be paid for at the contract unit price per each of "Modify Concrete Bearing Pad", complete, in place, which price shall include all equipment, tools and labor incidental to the grinding of the bridge seat at bearing locations.

Furnishing and installation of the Steel Reinforced Elastomeric Bearings shall be paid for under the contract unit price for "Elastomeric Bearings".

Pay Item	Pay Unit
Modify Concrete Bearing Pad	EA

ITEM #0602910A - DRILLING HOLES AND GROUTING DOWELS

Description: Work under this item shall consist of drilling holes in concrete and grouting reinforcing dowels at the locations shown on the plans, in accordance with the plans, the manufacturer's recommendations, and as directed by the Engineer. For the purposes of this specification, a dowel is defined as a reinforcing bar.

Materials: The chemical anchoring material shall conform to Subarticle M.03.01-15.

Construction Methods: Before fabricating any materials, the Contractor shall submit manufacturer's specifications and installation for the chemical anchoring material to the Engineer for review in accordance with Article 1.05.02.

Holes for the dowels shall be located as shown on the plans. The holes shall clear the existing reinforcement and provide the minimum cover as shown on the plans. A pachometer shall be used to locate existing reinforcing steel. If existing reinforcing is encountered during the drilling operation, the holes shall be relocated and the uncompleted holes shall be filled with the chemical anchoring material and finished smooth and flush with the adjacent surface.

The depth and diameter of each hole shall be as shown on the plans. If the diameter of a hole is not shown, the diameter of the hole shall conform to the manufacturer's recommendations for the diameter of the dowel being anchored. If the depth and diameter of a hole are not shown, the hole shall conform to the manufacturer's recommendations for the diameter of the dowel being anchored such that the grouted dowels will be able to develop, in tension, 100 percent of its specified yield strength.

Hole drilling methods shall not cause spalling, cracking, or other damage to the existing concrete. The weight of the drill shall not exceed 14 lbs. Those areas damaged by the Contractor shall be repaired by him in a manner suitable to the Engineer and at no expense to the State.

Prior to placing the chemical anchoring material in the holes, the holes shall be cleaned of all dirt, moisture, concrete dust and other foreign material. The dowel and the chemical anchoring material shall be installed in the holes in accordance with the chemical anchoring material manufacturer's recommendations.

The Contractor, as directed by the Engineer, shall take adequate precautions to prevent any materials from dropping to the area below, which may result in damage to any existing construction or to adjoining property. Should any damage occur to the structure as a result of the Contractor's operations, the Contractor shall make repairs at his own expense. The repair work shall be approved in advance and shall be of a quality acceptable to the Engineer.

Method of Measurement: This work will be measured for payment by the actual number of drilled holes in which dowels are embedded and accepted.

Basis of Payment: This work will be paid for at the contract unit price each for "Drilling Holes and Grouting Dowels," which price shall include drilling and preparing holes, furnishing and installing the chemical anchoring material in the holes and all material, equipment, tools and labor incidental thereto.

Pay Item	Pay Unit
Drilling Holes and Grouting Dowels	EA

ITEM #0707009A - MEMBRANE WATERPROOFING (COLD LIQUID ELASTOMERIC)

Description: Work under this item consists of furnishing and installing a seamless elastomeric waterproofing membrane system applied to a concrete or steel surface as shown on the plans, in accordance with this specification and as directed by the Engineer. Work shall also include conditioning of the surface to be coated and all quality-control testing noted herein.

The completed membrane system shall be comprised of a primer coat followed by the membrane coating which is applied in one or two layers for a minimum total thickness of 80 mil (2 mm). This work shall also include an additional 40 mil (1mm) membrane layer with aggregate broadcast into the material while still wet.

Materials: The Contractor shall select a waterproofing membrane system from the Department's current Qualified Product List (QPL) for Spray-Applied Membrane Waterproofing System. All materials incorporated in the works shall meet the Manufacturer's specification for the chosen system. The Engineer will reject any system that is not on the QPL.

Materials Certificate: The Contractor shall submit to the Engineer a Materials Certificate for the primer and membrane in accordance with the requirements of Article 1.06.07.

Construction Methods: At least ten days prior to installation of the membrane system, the Contractor shall submit to the Engineer, the manufacturer's recommended procedure for preparing the deck surface, pre-treatment or preparing at cracks and gaps, treatment at curbs, vertical surfaces or discontinuities, applying the primer and membrane, and placing of aggregated coat. Procedures shall also include recommended repairs of system non-compliant issues identified during application. The system shall be applied to the prepared area(s) as defined in the plans strictly in accordance with the Manufacturer's recommendations.

A technical representative, in the direct employ of the manufacturer, shall be present on-site immediately prior to and during application of the membrane. The representative shall inspect and approve the surface prior to priming, and provide guidance on the handling, mixing and addition of components and observe application of the primer and membrane. The representative shall perform all required quality-control testing and remain on the Project site until the membrane has fully cured.
All quality-control testing, including verbal direction or observations on the day of the installation, shall be recorded and submitted to the Engineer for inclusion in the Project's records. A submittal of the quality-control testing data shall be received by project personnel prior to any paving over the finished membrane or within 24 hours following completion of any staged portion of the work.

1. Applicator Approval: The Contractor's membrane Applicator shall be fully trained and licensed by the membrane manufacturer and shall have successfully completed at least three spray membrane projects in the past five years. The Contractor shall furnish references from those projects, including names of contact persons and the names, addresses and phone numbers of persons who supervised the projects. This information shall be submitted to the Engineer prior to the start of construction. The Engineer shall have sole authority to determine the adequacy and compliance of the submitted information. Inadequate proof of ability to perform the work will be grounds to reject proposed applicators.

2. Job Conditions:

   (a) Environmental Requirements: Air and substrate temperatures shall be between 32°F (0°C) and 104°F (40°C) providing the substrate is above the dew point. Outside of this range, the Manufacturer shall be consulted.

   The Applicator shall be provided with adequate disposal facilities for non hazardous waste generated during installation of the membrane system. The applicator shall follow safety instructions regarding respirators and safety equipment.

   (b) Safety Requirements: All open flames and spark producing equipment shall be removed from the work area prior to commencement of application.

   "No Smoking" signs shall be visibly posted at the job site during application of the membrane waterproofing.

   Personnel not involved in membrane application shall be kept out of the work area.

3. Delivery, Storage and Handling:

   (a) Packaging and Shipping: All components of the membrane system shall be delivered to the site in the Manufacturer's packaging, clearly identified with the products type and batch number.

   (b) Storage and Protection: The Applicator shall be provided with a storage area for all components. The area shall be cool, dry and out of direct sunlight and shall be in accordance with the Manufacturer's recommendations and relevant health and safety regulations.

   Copies of Material Safety Data Sheets (MSDS) for all components shall be kept on site for review by the Engineer or other personnel.

   (c) Shelf Life - Membrane Components: Packaging of all membrane components shall include a shelf life date sealed by the Manufacturer. No membrane components whose shelf life has expired shall be used.

4. Surface Preparation:

   (a) Protection: The Applicator shall be responsible for the protection of equipment and adjacent areas from over spray or other contamination. Parapets and bridge joints shall be masked prior to application of the materials.

   (b) Surface Preparation: Sharp peaks and discontinuities shall be ground smooth. The surface profile of the prepared substrate is not to exceed 1/4 inch (6 mm) (peak to valley) and areas of minor surface deterioration of 1/2 inch (13 mm) and greater in depth shall also be repaired. The extent and location of the surface patches require the approval of the Engineer before the membrane system is applied.

   Surfaces shall be free of oil, grease, curing compounds, loose particles, moss, algae, growth, laitance, friable matter, dirt, bituminous products, and previous waterproofing materials. If required, degreasing shall be done by detergent washing in accordance with ASTM D4258.

   The surface shall be abrasively cleaned, in accordance with ASTM D4259, to provide a sound substrate free from laitance.

   Voids, honeycombed areas, and blow holes on vertical surfaces shall be repaired in the same manner.

   All steel components to receive membrane waterproofing shall be blast cleaned in accordance with SSPC SP6 and coated with the membrane waterproofing system within the same work shift.

5. Inspection and Testing: Prior to priming of the surface, the Engineer, Applicator and Manufacturer's technical representative shall inspect and approve the prepared substrate.

   (a) Random tests for deck moisture content shall be conducted on the substrate by the Applicator at the job site using a "Sovereign Portable Electronic Moisture Master Meter," a "Tramex CMEXpertII Concrete Moisture Meter" or approved equal. The minimum frequency shall be one test per 1000 s.f. (100 sq.m) but not less than three tests per day per bridge. Additional tests may be required if atmospheric conditions change and retest of the substrate moisture content is warranted.

   The membrane system shall not be installed on substrate with a moisture content greater than that recommended by the system's manufacturer, but shall not be greater than 6%, whichever is less.

   (b) Random tests for adequate tensile bond strength shall be conducted on the substrate using an adhesion tester in accordance with the requirements of ASTM D4541. The minimum frequency shall be one test per 5,000 s.f. (500 sq.m) but not less than three adhesion tests per bridge.

Adequate surface preparation will be indicated by tensile bond strengths of primer to the substrate greater than or equal to 150 psi (1.0 MPa) or failure in a concrete surface and greater than or equal to 300 psi (2.1 MPa) for steel surfaces.

If the tensile bond strength is lower than the minimum specified, the Engineer may request additional substrate preparation. Any primer not adequately applied shall be removed and a new primer applied at the Contractor's expense, as directed by Engineer.

(c) Cracks and grouted joints shall be treated in accordance with the Manufacturer's recommendations, as approved or directed by the Engineer.

6. Application:

(a) The System shall be applied in four distinct steps as follows:
   1) Substrate preparation and gap/joint bridging preparation
   2) Priming
   3) Membrane application
   4) Membrane with aggregate

(b) Immediately prior to the application of any components of the System, the surface shall be dry (see Section 5a of this specification) and any remaining dust or loose particles shall be removed using clean, dry oil-free compressed air or industrial vacuum.

(c) Where the area to be treated is bound by a vertical surface (e.g. curb or wall), the membrane system may be continued up the vertical, as shown on the plans or as directed by the Engineer.

(d) The handling, mixing and addition of components shall be performed in a safe manner to achieve the desired results, in accordance with the Manufacturer's recommendations or as approved or directed by the Engineer.

(e) A neat finish with well defined boundaries and straight edges shall be provided by the Applicator.

(f) Primer: The primer shall consist of one coat with an overall coverage rate of 125 to 175 s.f./gal (3.0 to 4.3sq.m/1) unless otherwise recommended in the manufacturer's written instructions.

All components shall be measured and mixed in accordance with the Manufacturer's recommendations.

The primer shall be spray applied using a single component spray system approved for use by the Manufacturer. If required by site conditions and allowed by the manufacturer, brush or roller application will be allowed.

The primer shall be allowed to cure tack-free for a minimum of 30 minutes or as required by the Manufacturer's instructions, whichever time is greater, prior to application of the first lift of waterproofing membrane.

Porous concrete (brick) may require a second coat of primer should the first coat be absorbed.

(g) Membrane: The waterproofing membrane shall consist of one or two coats for a total dry film thickness of 80 mils (2 mm). If applied in two coats, the second coat shall be of a contrasting color to aid in quality assurance and inspection.

The membrane shall be comprised of Components A and B and a hardener powder which is to be added to Component B in accordance with the Manufacturer's recommendations.

The substrate shall be coated in a methodical manner.

Thickness checks: For each layer, checks for wet film thickness using a gauge pin or standard comb-type thickness gauge shall be carried out typically once every 100 s.f. (9 sq.m). Where rapid set time of the membrane does not allow for wet film thickness checks, ultrasonic testing (steel surfaces only), calibrated point-penetrating (destructive) testing, in-situ sampling (cutout of small sections for measuring thicknesses), or other methods approved by the Engineer shall be employed for determination of dry film thickness. The measured thickness of each and every individual test of the membrane shall be greater than or equal to the required thickness.

Bond Strength: Random tests for adequate tensile bond strength shall be conducted on the membrane in accordance with the requirements of ASTM D4541. The minimum test frequency shall be one test per 5,000 s.f. (500 sq.m) but no less than three adhesion tests per bridge. Adequate adhesion will be indicated by tensile bond strengths of the membrane to the substrate of greater than or equal to 150 psi (0.7 MPa) or failure in a concrete surface and greater than or equal to 300 psi (2.1 MPa) for steel surfaces.

Spark Testing: Following application of the membrane, test for pin holes in the cured membrane system over the entire application area in accordance with ASTM D4787- "Continuity Verification of Liquid or Sheet Linings Applied to Concrete Substrates." Conduct the test at voltages recommended by the manufacturer to prevent damage to the membrane.

Repair the membrane system following destructive testing and correct any deficiencies in the membrane system or substrate noted during quality-control testing in accordance with the manufacturer's recommendations to the satisfaction of the Engineer at no additional cost to the State.

(h) Repairs: If an area is left untreated or the membrane becomes damaged, a patch repair shall be carried out to restore the integrity of the system. The damaged areas shall be cut back to sound materials and wiped with solvent (e.g. acetone) up to a width of at least four inches (100 mm) on the periphery, removing any contaminants unless otherwise recommended by the manufacturer. The substrate shall be primed as necessary, followed by the membrane. A continuous layer shall be obtained over the substrate with a four inches (100 mm) overlap onto existing membrane.

Where the membrane is to be joined to existing cured material, the new application shall overlap the existing by at least four inches (100 mm). Cleaning and surface preparation on areas to be lapped shall be as recommended in the manufacturer's written instructions.

(i) Aggregated Finish:
1) Apply an additional 40 mil (1 mm) thick layer of the membrane material immediately followed by an aggregate coating, before the membrane cures, at a rate to fully cover the exposed area. The membrane and aggregate shall be fully integrated after the aggregate has been applied and the membrane cured.
2) Localized areas not fully coated shall be touched-up with additional membrane and aggregate as needed.
3) Remove loose and excess aggregate from the surface to the satisfaction of the Engineer and dispose of properly after application prior to allowing traffic onto finished surface or application of tack coat.

(j) Tack Coat:
Prior to application of a bituminous concrete overlay, the aggregated finish shall be coated with tack coat in accordance with Section 4.06.

7. Final Review: The Engineer and the Applicator shall jointly review the area(s) over which the completed System has been installed. Any irregularities or other items that do not meet the requirements of the Engineer shall be addressed at this time.

Method of Measurement: The quantity to be paid for under this item shall be the number of square yards (square meters) of waterproofed surface completed and accepted.

Basis of Payment: This item will be paid for at the contract unit price per square yard (square meter) of "Membrane Waterproofing (Cold Liquid Elastomeric)," complete in place, which price shall include all surface preparation, furnishing, storing and applying the system, technical representative and quality control tests, and any necessary repairs and remediation work as well as all materials, equipment, tools, labor incidental to this work.

Pay Item	Pay Unit
Membrane Waterproofing (Cold Liquid Elastomeric)	s.y. (sq.m)

ITEM #0714050A - TEMPORARY EARTH RETAINING SYSTEM

Description: Temporary earth retaining system shall be any type of adequately braced temporary retaining wall such as temporary sheet piling which the Contractor elects to build to satisfy, and which does satisfy, the condition that existing facilities be properly retained during excavation or fill for the placement of substructure or other facilities. Temporary earth retaining system shall be designed by the Contractor and constructed where shown on the plans. This system shall be removed upon completion of the permanent work, except that some sections may be left in place when so ordered by the Engineer.

Materials: Materials of steel sheet piling shall conform to the requirement of ASTM A 328. Timber sheet piling shall conform to the requirements of Subarticle M.09.01-1. Materials other than steel or timber, or a combination of these may be used provided they are properly designed for the purpose intended. Systems utilizing other material(s) shall conform to the manufacturer's specifications and project specifications. The parts list shall be furnished for the proprietary system and the Contractor shall provide the material certificates for the parts.

Construction Methods: Temporary earth retaining system shall be safely designed and shall be carried to adequate depths and braced as necessary for proper performance of the work. Construction shall be such as to permit excavation or fill as required. Interior dimensions shall be such as to give sufficient clearance for construction of forms and their inspection and for battered pile clearance when necessary. Movements of the system or bracing which prevent the proper completion of the substructure shall be corrected at the sole expense of the Contractor. No part of the temporary earth retaining system or bracing shall be allowed to extend into the substructure without written permission of the Engineer.

Temporary earth retaining system located behind unanchored temporary precast concrete barrier curb shall be designed to support a TL-1 vehicular impact loading in accordance with the AASHTO LRFD Bridge Design Specifications.

Working drawings and design calculations for temporary earth retaining system shall be submitted in accordance with the requirements of Article 1.05.02(2). The working drawings and design calculations shall be prepared, sealed, and signed by a Professional Engineer, licensed in the State of Connecticut. The furnishing of such plans shall not serve to relieve the Contractor of any part of his responsibility for the safety of the work or for the successful completion of the project.

Unless otherwise ordered by the Engineer, all parts of the temporary earth retaining system shall be removed upon completion of the work for which it was provided. The excavation shall be backfilled and properly compacted, prior to removal of the system unless otherwise permitted by the Engineer. Temporary earth retaining system may be left in place at the option of the Contractor if so permitted by the Engineer, provided that it is cut off at an elevation as directed by the Engineer and the cutoffs removed from the site.

Method of Measurement: Temporary earth retaining system will be measured for payment by the number of square feet of temporary retaining wall completed and accepted, as computed from the horizontal and vertical payment lines shown on the plans or as ordered. If no payment limits are shown on the plans, the limits used for payment will be the actual horizontal limit of temporary earth retaining system installed and accepted, and the vertical limit as measured from the bottom of the exposed face of the wall system to the top of the retained earth behind the system. The measurement for temporary earth retaining system which is used as a common wall for staged construction will be the horizontal payment limit shown on the plans and the greater vertical dimension of the common wall face.

No measurement will be made of end extensions or returns necessary for the safety of the retained facility. Earth retaining system ordered left in place by the Engineer shall be measured in accordance with "Earth Retaining System Left in Place."

Earth retaining systems left in place solely at the Contractor's option, and with the Engineer's permission, will not have an additional payment at the contract unit price per square foot for "Earth Retaining System Left in Place."

Basis of Payment: Payment for this work will be made at the contract unit price per square foot for "Temporary Earth Retaining System" measured as described above, which price shall include all design, materials, equipment and labor incidental to the construction and removal of the temporary earth retaining system required at the locations specified on the plans; including removal of obstructions, repair and correction, adjustments or reconstruction required by the plans. Any common earth retaining system required for staged construction will be measured for payment only once.

Pay Item	Pay Unit
Temporary Earth Retaining System	s.f.

ITEM #0822005A - TEMPORARY PRECAST CONCRETE BARRIER CURB (STRUCTURE)

ITEM #0822006A - RELOCATED TEMPORARY PRECAST CONCRETE BARRIER CURB (STRUCTURE)

Description: Work under this item shall consist of furnishing, installing, and removing temporary concrete barrier for use on structures as shown on the plans.

If called for on the plans, the temporary concrete barrier shall also be relocated as necessary to accommodate stage construction conditions. Relocation of the TPCBC to the storage area will not be measured for payment.

Materials:

1. The barrier shall be precast concrete conforming to Article 8.21.02-1.

2. Manufacturer identification and casting date shall be permanently marked on each barrier unit by means of a non-corrosive metal or plastic tag in the location shown on the plan. When used barrier is furnished, the Contractor shall provide documentation stating from where the material came, what project it will be used on, the casting dates, and certification that the barrier conforms to all State requirements.

3. Reinforcing steel shall conform to the requirements of ASTM A615M, Grade 60.

4. Lifting hooks, keys, bolts, devices and attachments shall be of the size indicated on the plans or of a design satisfactory for the purpose intended as approved by the Engineer.

5. Anchor bolts shall conform to ASTM A307. Heavy hex nuts shall conform to AASHTO M291. The plate washers shall conform to AASHTO M232M, Grade 50. The anchor bolts, nuts, and plate washers shall be hot-dipped galvanized in accordance with AASHTO M232 and M111 as applicable.

6. Loop bars shall be bent from smooth bar steel conforming to AISI 1018 (hot rolled). Ends shall be hot-dipped galvanized in accordance with AASHTO M111.

7. Threaded connection rods shall be steel conforming to AASHTO M314 (ASTM F1554) Grade 55 except that threads and nominal diameters shall conform to ANSI B1.13M for Class 6g threads. The rod shall be threaded for a minimum of 4 inch at each end. Plain steel washers shall be manufactured in accordance with ANSI B18.22M. Heavy hex nuts shall conform to AASHTO M 291M for Class

10S and shall conform to the geometry defined in ANSI B18.2.4.6M. The threaded connection rods, washers, and nuts shall be hot-dipped galvanized after fabrication in accordance with the requirements of Class C of AASHTO M232.

8. The chemical anchor material shall be a resin compound specially formulated to secure bolts in concrete against tension pull-out. The Contractor shall select the chemical anchor material in accordance with Article M.03.01-15.

9. Non-shrink grout shall conform to subarticle M.03.01-12.

10. Barrier shall be accepted on the basis of the manufacturer's certification, as defined on Article M.08.02-4.

11. Sealant for patching holes in bituminous overlays shall be a cold-applied bituminous sealer conforming to M.08.01-15.

12. Anchor Bolts/Threaded Connection Rods-Certified Test Reports: The Contractor shall submit a Certified Test Report and a Materials Certificate in conformance with Article 1.06.07 and a sample of all anchor bolts, threaded connection rods, nuts, and washers for testing prior to their installation. The Contractor shall not install any anchor bolts or threaded connection rods, prior to receipt of the approved test results and approval by the Engineer.

13. Delineators shall conform to Article 8.22.02.

Construction Methods:

1. Fabrication: The barrier shall be precast concrete in conformance with the pertinent requirements of Article 8.21.03 and the plans, except that penetrating sealer protective compound is not required.

2. Installation: The barrier shall be placed as shown on the plans or as directed by the Engineer.

   The barriers shall be anchored to the concrete deck slab in accordance with the plans and the following:

   a. Prestressed Deck Units: Threaded inserts with matching anchor bolts shall be used for securing the barrier to prestressed deck units. The threaded inserts shall be cast into the deck units during fabrication as necessary to accommodate stage construction.

   b. Chemical Anchoring: This consists of drilling holes in concrete deck slabs, placing anchor bolts in the holes, and securing the bolts with a pre-approved chemical anchor material.

The Contractor shall submit the following to the Engineer for approval type of drill, diameter of bit, method of cleaning. Holes, and method of placement of chemical anchor material. Specifications and recommendations for the aforementioned may be obtained from the manufacturer of the chemical anchor material.

Drilling methods shall not cause spalling, cracking, or other damage to the concrete. Those areas damaged by the Contractor shall be repaired by him in a manner suitable to the Engineer and at no expense to the State.

Care shall be taken not to drill holes into or through structural steel.
The Contractor shall take the necessary precautions to prevent materials from falling onto the roadway below.

When reinforcing steel is encountered during the drilling of the holes, the Contractor shall attempt to angle the hole to by-pass the bar.

The anchor bolts shall extend to the bottom of the holes and be hammer taped to insure full penetration. The chemical anchor material shall be installed in accordance with the written directions supplied by manufacturer of the chemical anchor material.

The barrier shall be anchored down by torqueing the bolts "snug tight", which is defined as the tightness attained after several impacts from an impact wrench. No part of the bolt head shall project above the outer surface of the barrier.

b. Through-Bolting: This consists of drilling completely through the deck slab and securing anchor bolts on the underside with plate washers and nuts. Through-Bolting is not permitted on new construction or prestressed concrete. Measures shall be taken to insure that no damage occurs to property below the bridge.

c. Care shall be taken not to drill holes into or through structural steel.
The barrier shall be anchored down by torqueing the bolts 'snug tight", which is defined as the tightness attained after several impacts from an impact wrench. No part of the bolt head shall project above the outer surface of the barrier.

3. Connection of Barrier Units: The barrier shall be joined together with threaded connection rods, and heavy hex nuts in accordance with the plans.

4. Cutting of Anchor Bolts: Where ordered by the Engineer, protruding anchor bolts shall be cut off flush with the surface of the concrete deck. The bolts shall

then be ground down below the surface of the deck and the space filled in with non-shrink grout.

5. Patching with Non-Shrink Grout: After removal of the barrier, holes in newly constructed concrete decks and threaded inserts shall be blown clean with an air jet and filled in with non-shrink grout. The non-shrink grout shall be mixed and placed in strict accordance with the manufacturer's directions. The non-shrink grout shall be finished flush with the deck surface. Allow grout to cure a minimum of 24 hours before placing sealant in any remaining hole in the bituminous wearing surface.

6. Delineators: Delineators shall be installed on top of the barrier in accordance with Article 8.22.03-3 and the plans.

7. General: The barrier shall be kept in good condition at all times by the Contractor during all stages of construction. Any damaged material shall be replaced by the Contractor at his expense.

   When the barrier is no longer required, it shall be removed from the work site and become the property of the Contractor.

8. Relocation of Barrier: If called for on the plans, the Contractor shall relocate the barrier and its appurtenances to locations within the project limits as shown on the plans or as ordered by the Engineer.

Method of Measurement: Temporary structure barrier will be measured for payment along the centerline at the top of the barrier and will be the actual number of feet of temporary structure barrier furnished, installed, and accepted.

Relocated temporary structure barrier will be measured for payment along the centerline at the top of the barrier each time the barrier has been satisfactorily relocated and anchored as indicated on the plans. Relocation of the barrier to the storage area will not be measured for payment.

Relocation of barrier for contractor’s convenience or access to the work zone will not be measured for payment but considered to be included in general cost of the work.

Basis of Payment: This work will be paid for at the contract unit price per foot for "Temporary Precast Concrete Barrier Curb (Structure)", complete in place, which price shall include all furnishing, transportation, initial installation, final removal, storage, materials, reinforcing steel, connection rods, and all equipment, tools, and labor incidental thereto. The cost of furnishing, installing, and cutting of anchor bolts shall also be included for payment under this item. Each temporary structure barrier will be paid for once regardless of the number of times it is used on the project. Any barrier

units that become lost, damaged or defaced shall be replaced by the Contractor at no cost to the State.

The relocation of the temporary structure barrier will be paid for at the contract unit price per foot for "Relocated Temporary Precast Concrete Barrier Curb (Structure)", which price shall include removing, transporting and re-anchoring the barrier units, and all other materials, equipment, tools, and labor incidental thereto.

Delineators will be paid for in accordance with Article 12.05.05.

Pay Item:	**Pay Unit:**
Temporary Precast Concrete Barrier Curb (Structure)	L.F.
Relocated Temporary Precast Concrete Barrier Curb (Structure)	L.F.

ITEM #0913068A TEMPORARY 6’ CHAIN LINK FENCE

Description: This item shall include installation and removal of temporary 6’ chain link fence. The temporary 6’ chain link fence shall be installed prior to the removal of the existing chain link fence.

Work under this item shall conform to the applicable sections of Section 9.13 – Chain Link Fence

Materials: Materials shall conform to the requirements of Article M.10.05

Construction Methods: The construction methods shall comply with the applicable sections of Section 9.13.03

The Contractor shall take necessary precautions to prevent any damage to portions of fence to be maintained.

Method of Measurement: The length of “Temporary 6’ Chain Link Fence” measured for payment will be the number of linear feet of temporary fence installed and removed.

Basis of Payment: This work will be paid for at the contract unit price per linear foot for "Temporary 6’ Chain Link Fence", complete in place, which price shall include all materials, tools, equipment and labor incidental thereto, also all excavation, backfilling and disposal of surplus material. Parts of fence damaged by the Contractor's operations shall be replaced at his own expense.

Pay Item:	Pay Unit
Temporary 6’ Chain Link Fence	L.F.

ITEM #0913835A REMOVE AND RESET CHAIN LINK FENCE

Description: This item shall include removal and resetting existing chain link fence. This item will also include the storage of chain link fence and associated materials between the time of its removal and resetting. It shall be erected to match its pre-construction configuration or as ordered by the Engineer. Any existing fence damaged by the contractor shall be repaired at his expense.

Work under this item shall conform to the applicable sections of Section 9.13 – Chain Link Fence

Materials: New materials required shall conform to the requirements of Article M.10.05

Construction Methods: The construction methods shall comply with the applicable sections of Section 9.13.03

The Contractor shall take necessary precautions to prevent any damage to portions of fence to be maintained.

Method of Measurement: The length of "Remove and Reset Chain Link Fence" measured for payment will be the number of linear feet of accepted fence removed and installed, measured between the last undisturbed post to the last reset post.

Basis of Payment: This work will be paid for at the contract unit price per linear foot for "Remove and Reset Chain Link Fence", complete in place, which price shall include all materials, tools, equipment and labor incidental thereto, also all excavation, backfilling and disposal of surplus material. Parts of fence damaged by the Contractor's operations shall be replaced at his own expense.

Pay Item:	Pay Unit
Remove and Reset Chain Link Fence	L.F.

ITEM #0913952A - PROTECTIVE FENCE (5' HIGH)

ITEM #0913955A – PROTECTIVE FENCE (7' HIGH) (CURVED)

Description: Work under this item consists of furnishing and installing a protective chain link fence, with a curved top (as applicable), mounted on top of the parapet, in accordance with the details shown on the plans and in conformance with these specifications or as directed by the Engineer in the field.

Materials: Materials for this work shall be as specified on the plans and shall conform to the applicable requirements of Article M.10.05 of the Department Standard Specification.

The metal posts and rails shall conform to the requirements of ASTM A53, Types E or S Grade B.

Steel base plates shall conform to the requirements of ASTM A36. Stainless steel anchor bolts, nuts and washers shall conform to the requirements of ASTM F593.

The metal posts, rails and base plates shall be hot-dip galvanized as specified Article M.10.05.

The mesh shall be coated with polyvinyl chloride. The color of the coating shall be black.

Molded pads shall be manufactured from new unvulcanized elastomer and unused synthetic fibers, with a weight proportion of fiber content equal to approximately ½ of the total weight of the pad. The pads shall be formed into single sheets of 1/8 inch minimum thickness, with a tolerance of 10%, plus or minus. Pads shall have a Shore A Durometer hardness within the range of 70 to 90, and shall have a minimum compressive breakdown stress of 7000 psi.

Chemical anchoring material for securing anchor bolts shall conform to the requirements of M.03.05.

Construction Methods: The Contractor shall submit shop drawings to the Engineer for review and approval prior to beginning installation. Shop drawings shall include but not be limited to the following information: a layout plan showing all post spacings and parapet joints (expansion and paraffin), all fence and attachment details, materials list and material designations.

All welding shall conform to the applicable requirements of 6.03.03. Welding shall be performed prior to coating with Polyvinyl Chloride Plastic.

Posts shall be located along the parapet as indicated on the approved shop drawings. A durable template shall be used to accurately position the drilled holes for the anchor bolts. The diameter of the holes shall be as specified by the chemical anchor Manufacturer.

Molded pads shall be installed between all base plates and the top of the concrete parapet.

All panels shall be braced with horizontal rails. Rails shall be securely fastened to the post by connection clamps, as shown on the plans. Tension wires shall be located within the curved panel portion (as applicable), as shown on the plans.

The fabric shall be stretched between posts and secured with stretcher bar bands. The fabric shall be fastened to intermediate posts and rails with PVC coated wire as indicated on the plans. Hog ring shall be used to secure the fabric to the tension wires.

Method of Measurement: This work shall be measured for payment by the number of linear feet of completed and accepted protective fence measured from outside to outside of the terminal (end) posts.

Basis of Payment: This work will be paid for at the contract unit price, per linear foot for, "Protective Fence (5' High)" or "Protective Fence (7' High) (Curved)", complete and accepted in place, which price includes all materials, equipment, tools and labor incidental thereto, including providing and installing the anchor bolts in the top of the parapet.

Pay Item	Pay Unit
Protective Fence (5' High)	LF
Protective Fence (7' High) (Curved)	LF

ITEM # 0917010A – REPAIR GUIDERAIL

Description: Work under this item shall consist of the repair of newly installed guiderail. It shall be repaired in the locations originally installed and fabricated in conformity with the lines, designations, dimensions, and details shown on the plans or as ordered by the Engineer.

Materials: The material for guiderail shall meet the requirements as specified within the original applicable contract items.

When repairing guiderail, the Contractor shall reuse any undamaged existing guiderail elements, timber rail, wire rope, appropriate posts, delineators, lap bolts, and other hardware within the project limits as approved by the Engineer to repair the guiderail. The Contractor shall use new materials when any components of the existing railing are damaged or missing and cannot be obtained from other guiderail systems being removed or converted within the Project limits.

Construction Methods: The repair of guiderail shall be in accordance with contraction methods as specified within the original applicable contract items.

Guiderail, including end anchors, which has been installed in final condition and accepted by the Engineer, shall be eligible for reimbursement for repairs subject to the conditions described below. If multiple runs are to be installed in a single stage as indicated in the contract documents, determination for reimbursement shall be made when all runs within the stage are complete and accepted as previously described. On projects without designated stages, guiderail installations must be complete and serving the intended function as determined by the Engineer.

When newly installed guiderail is damaged by public traffic, the following conditions must be satisfied prior to reimbursement for payment;

1. The damage must have been caused solely by the traveling public.

2. The contractor shall provide satisfactory evidence that such damage was caused by public traffic. Such as accident reports obtained from the Connecticut Department of Public Safety, police agencies or insurance companies; statements by reliable, unbiased eyewitnesses; or identification of the vehicle involved in the accident.

3. The contractor shall attempt to collect the costs from the person or persons responsible for the damage and provide documentation of those efforts to the satisfaction of the Engineer.

4. If such evidence cannot be obtained, the Engineer may determine that the damage was not caused by the Contractor and reimbursement for payment is warranted.

This repair provision does not relieve the Contractor of the requirements of Section 1.07, any other contractual requirements for maintenance and protection of traffic and final acceptance and relief of responsibility for the project.

The contractor shall remain responsible for the safety and integrity of the guiderail system for the duration of the project. In the event the guiderail is damaged, the Contractor shall provide sufficient cones, drums and other traffic control devices to provide safe passage by the public. When ordered by the Engineer, the Contractor shall furnish replacement parts and immediately repair the guiderail, but in no case more than 24 hours after notification from the Engineer. In non-emergency situations, the guiderail shall be repaired within 72 hours. The repaired guiderail or anchorages, when completed, shall conform to these specifications for a new system. The Contractor shall be responsible for the removal and the proper disposal of all damaged material and debris.

Method of Measurement: Guiderail damaged solely by the traveling public will be measured for payment. Damage caused by the Contractor's equipment or operations will not be measured for payment.

The sum of money shown on the estimate and in the itemized proposal as "Estimated Cost" for repair of guiderail will be considered the price bid even though payment will be made only for actual work performed. The estimated cost figure is not to be altered in any manner by the bidder. Should the bidder alter the amount shown, the altered figures will be disregarded and the original price will be used to determine the total amount bid for the contract.

Basis of Payment: Repair of guiderail will be paid for in accordance with Article 1.09.04 as required to restore the rail to its full working condition in conformance with these specifications for a new system. There will be no payment for maintenance and protection of traffic for work associated with this item unless, in the opinion of the Engineer, the sole purpose of the maintenance and protection of traffic is for repair of the guiderail.

Pay Item	Pay Unit
Repair Guiderail	est. (est.)

ITEM #0969062A - CONSTRUCTION FIELD OFFICE, MEDIUM

Description: Under the item included in the bid document, adequate weatherproof office quarters with related materials, equipment and other services, shall be provided by the Contractor for the duration of the work, and if necessary, for a close-out period determined by the Engineer. The office, materials, equipment, and services are for the exclusive use of CTDOT forces and others who may be engaged to augment CTDOT forces with relation to the Contract. The office quarters shall be located convenient to the work site and installed in accordance with Article 1.08.02. This office shall be separated from any office occupied by the Contractor. Ownership and liability of the office quarters shall remain with the Contractor.

Materials/Supplies/Equipment: Materials shall be in like new condition for the purpose intended and shall be approved by the Engineer.

Office Requirements: The Contractor shall furnish the office quarters and equipment as described below.

Description \ Office Size	Small	Med.	Large	Extra Large
Minimum Sq. Ft. of floor space with a minimum ceiling height of 7 ft.	400	400	1000	2000
Minimum number of exterior entrances.	2	2	2	2
Minimum number of parking spaces.	7	7	10	15

Office Layout: The office shall have a minimum square footage as indicated in the table above, and shall be partitioned as shown on the building floor plan as provided by the Engineer.

Tie-downs and Skirting: Modular offices shall be tied-down and fully skirted to ground level.

Lavatory Facilities: For field offices sizes Small and Medium the Contractor shall furnish a toilet facility at a location convenient to the field office for use by Department personnel and such assistants as they may engage; and for field offices sizes Large and Extra Large the Contractor shall furnish two (2) separate lavatories with toilet (men and women), in separately enclosed rooms that are properly ventilated and comply with applicable sanitary codes. Each lavatory shall have hot and cold running water and flush-type toilets. For all facilities the Contractor shall supply lavatory and sanitary supplies as required.

Windows and Entrances: The windows shall be of a type that will open and close conveniently, shall be sufficient in number and size to provide adequate light and ventilation, and shall be fitted with locking devices, blinds and screens. The entrances shall be secure, screened, and fitted with a lock for which four keys shall be furnished. All keys to the construction field office shall be furnished to the Department and will be kept in their possession while State personnel are using the office. Any access to the entrance ways shall meet applicable building codes, with appropriate handrails. Stairways shall be ADA/ABA compliant and have non-skid tread surfaces. An

This repair provision does not relieve the Contractor of the requirements of Section 1.07, any other contractual requirements for maintenance and protection of traffic and final acceptance and relief of responsibility for the project.

The contractor shall remain responsible for the safety and integrity of the guiderail system for the duration of the project. In the event the guiderail is damaged, the Contractor shall provide sufficient cones, drums and other traffic control devices to provide safe passage by the public. When ordered by the Engineer, the Contractor shall furnish replacement parts and immediately repair the guiderail, but in no case more than 24 hours after notification from the Engineer. In non-emergency situations, the guiderail shall be repaired within 72 hours. The repaired guiderail or anchorages, when completed, shall conform to these specifications for a new system. The Contractor shall be responsible for the removal and the proper disposal of all damaged material and debris.

Method of Measurement: Guiderail damaged solely by the traveling public will be measured for payment. Damage caused by the Contractor's equipment or operations will not be measured for payment.

The sum of money shown on the estimate and in the itemized proposal as "Estimated Cost" for repair of guiderail will be considered the price bid even though payment will be made only for actual work performed. The estimated cost figure is not to be altered in any manner by the bidder. Should the bidder alter the amount shown, the altered figures will be disregarded and the original price will be used to determine the total amount bid for the contract.

Basis of Payment: Repair of guiderail will be paid for in accordance with Article 1.09.04 as required to restore the rail to its full working condition in conformance with these specifications for a new system. There will be no payment for maintenance and protection of traffic for work associated with this item unless, in the opinion of the Engineer, the sole purpose of the maintenance and protection of traffic is for repair of the guiderail.

Pay Item	Pay Unit
Repair Guiderail	est. (est.)

ADA/ABA compliant ramp with non-skid surface shall be provided with the Extra-Large field office.

Lighting: The Contractor shall equip the office interior with electric lighting that provides a minimum illumination level of 100 foot-candles at desk level height, and electric outlets for each desk and drafting table. The Contractor shall also provide exterior lighting that provides a minimum illumination level of 2 foot-candles throughout the parking area and for a minimum distance of 10 ft. on each side of the field office.

Additional Equipment, Facilities and Services: The Contractor shall provide at the field Office at least the following to the satisfaction of the Engineer:

Parking Facility: The Contractor shall provide a parking area, adjacent to the field office, of sufficient size to accommodate the number of vehicles indicated in the table above. If a paved parking area is not readily available, the Contractor shall construct a parking area and driveway consisting of a minimum of 6 inches of processed aggregate base graded to drain. The base material will be extended to the office entrance.

Field Office Security: Physical Barrier Devices - This shall consist of physical means to prevent entry, such as: 1) All windows shall be barred or security screens installed; 2) All field office doors shall be equipped with dead bolt locks and regular day operated door locks; and 3) Other devices as directed by the Engineer to suit existing conditions.

Electric Service: The field office shall be equipped with an electric service panel to serve the electrical requirements of the field office, including: lighting, general outlets, computer outlets, calculators etc., and meet the following minimum specifications:

A. 120/240 volt, 1 phase, 3 wire
B. Ampacity necessary to serve all equipment. Service shall be a minimum 100 amp dedicated to the construction field office.
C. The electrical panel shall include a main circuit breaker and branch circuit breakers of the size and quantity required.
D. Additional 120 volt, single phase, 20 amp, isolated ground dedicated power circuit with dual NEMA 5-20 receptacles will be installed at each computer workstation location.
E. Additional 120 volt, single phase, 20 amp, isolated ground dedicated power circuit with dual NEMA 5-20 receptacles will be installed, for use by the Telephone Company.
F. Additional 120-volt circuits and duplex outlets as required meeting National Electric Code requirements.
G. One exterior (outside) wall mounted GFI receptacle, duplex, isolated ground, 120 volt, straight blade.
H. After work is complete and prior to energizing, the State's CTDOT electrical inspector, must be contacted at 860-594-2240. (Do Not Call Local Town Officials)
I. Prior to field office removal, the CTDOT Office of Information Systems (CTDOT OIS) must be notified to deactivate the communications equipment.

Heating, Ventilation and Air Conditioning (HVAC): The field office shall be equipped with sufficient heating, air conditioning and ventilation equipment to maintain a temperature range of 68°-80° Fahrenheit within the field office.

Telephone Service: The Contractor shall provide telephone service with unlimited nation-wide calling plan. For a Small, Medium and Large field office this shall consist of the installation of two (2) telephone lines: one (1) line for phone/voice service and one (1) line dedicated for the facsimile machine. For an Extra-Large field office this shall consist of four (4) telephone lines: three (3) lines for phone/voice service and one (1) line dedicated for facsimile machine. The Contractor shall pay all charges.

Data Communications Facility Wiring: Contractor shall install a Category 5e 468B patch panel in a central wiring location and Cat 5e cable from the patch panel to each PC station, terminating in a (category 5e 468B) wall or surface mount data jack. The central wiring location shall also house either the data circuit with appropriate power requirements or a category 5 cable run to the location of the installed data circuit. The central wiring location will be determined by the CTDOT OIS staff in coordination with the designated field office personnel as soon as the facility is in place.

For a Small, Medium and Large field office the Contractor shall run a CAT 5e LAN cable a minimum length of 25 feet for each computer to LAN switch area leaving an additional 10 feet of cable length on each side with terminated RJ45 connectors. For an Extra-Large field office the Contractor shall run CAT 5e LAN cables from workstations, install patch panel in data circuit demark area and terminate runs with RJ45 jacks at each computer location. Terminate runs to patch panel in LAN switch area. Each run / jack shall be clearly labeled with an identifying Jack Number.

The installation of a data communication circuit between the field office and the CTDOT OIS in Newington will be coordinated between the CTDOT District staff, and the local phone company. The CTDOT District staff will coordinate the installation of the data communication service with CTDOT OIS once the field office phone number is issued. The Contractor shall provide the field office telephone number(s) to the CTDOT Project Engineer within 10 calendar days after the signing of the Contract as required by Article 1.08.02. This is required to facilitate data line and computer installations.

The following furnishings and equipment shall be provided in the applicable field office type:

Furnishing Description	Office Size			
	Small	Med.	Large	Extra Large
	Quantity			
Office desk (2.5 ft x 5 ft) with drawers, locks, and matching desk chair that have pneumatic seat height adjustment and dual wheel casters on the base.	1	3	5	8
Standard secretarial type desk and matching desk chair that has pneumatic seat height adjustment and dual wheel casters on the base.	-	-	-	1
Personal computer tables (4 ft x 2.5 ft).	2	3	5	8
Drafting type tables (3 ft x 6 ft) and supported by wall brackets and legs; and matching drafters stool that have pneumatic seat height adjustment, seat back and dual wheel casters on the base.	1	1	1	2
Conference table, 3 ft x 12 ft.	-	-	-	1
Table – 3 ft x 6 ft.	-	-	-	1
Office Chairs.	2	4	8	20
Mail slot bin – legal size.	-	-	1	1
Non-fire resistant cabinet.	-	-	2	4
Fire resistant cabinet (legal size/4 drawer), locking.	1	1	2	3
Storage racks to hold 3 ft x 5 ft display charts.	-	-	1	2
Vertical plan racks for 2 sets of 2 ft x 3 ft plans for each rack.	1	1	2	2
Double door supply cabinet with 4 shelves and a lock – 6 ft x 4 ft.	-	-	1	2
Case of cardboard banker boxes (Min 10 ea)	1	1	2	3
Open bookcase – 3 shelves – 3 ft long.	-	-	2	2
White Dry-Erase Board, 36” x 48”min. with markers and eraser.	1	1	1	1
Interior partitions – 6 ft x 6 ft, soundproof type, portable and freestanding.	-	-	6	6
Coat rack with 20 coat capacity.	-	-	-	1
Wastebaskets - 30 gal., including plastic waste bags.	1	1	1	2
Wastebaskets - 5 gal., including plastic waste bags.	1	3	6	10
Electric wall clock.	-	-	-	2
Telephone.	1	1	1	-
Full size stapler 20 (sheet capacity, with staples)	1	2	5	8
Desktop tape dispensers (with Tape)	1	2	5	8

Business telephone system for three lines with ten handsets, intercom capability, and one speaker phone for conference table.	-	-	-	1
Mini refrigerator - 3.2 c.f. min.	1	1	1	1
Hot and cold water dispensing unit. Disposable cups and bottled water shall be supplied by the Contractor for the duration of the project.	1	1	1	1
Microwave, 1.2 c.f. , 1000W min.	1	1	1	1
Fire extinguishers - provide and install type and *number to meet applicable State and local codes for size of office indicated, including a fire extinguisher suitable for use on a computer terminal fire.	*	*	*	*
Electric pencil sharpeners.	1	2	2	2
Electronic office type printing calculators capable of addition, subtraction, multiplication and division with memory and a supply of printing paper.	1	1	2	4
Small Multi-Function Laser Printer/Copier/Scanner/Fax combination unit, network capable, as specified below under Computer Hardware and Software.	1	1		
Large Multi-Function Laser Printer/Copier/Scanner/Fax combination unit, network capable, as specified below under Computer Hardware and Software.			1	1
Computer System as specified below under Computer Hardware and Software.	2	3	5	8
Digital Camera as specified below under Computer Hardware and Software.	1	1	3	3
Video Projector as specified below under Computer Hardware and Software.	-	-	-	1
Smart Board as specified below under Computer Hardware and Software.	-	-	-	1
Infrared Thermometer, including annual third party certified calibration, case, and cleaning wipes.	1	1	1	2
Rain Gauge.	1	1	1	1
Concrete Curing Box as specified below under Concrete Testing Equipment.	1	1	1	1
Concrete Air Meter and accessories as specified below under Concrete Testing Equipment as specified below. Contractor shall provide third party calibration on a quarterly basis.	1	1	1	1
Concrete Slump Cone and accessories as specified below under Concrete Testing Equipment.	1	1	1	1
First Aid Kit	1	1	1	1

The furnishings and equipment required herein shall remain the property of the Contractor. Any supplies required to maintain or operate the above listed equipment or furnishings shall be provided by the Contractor for the duration of the project.

Computer Hardware and Software: Computer System(s), Digital Camera(s), Multifunction Laser Printer/Copier/Scanner/Fax, Video Projectors and Smart Board(s) as well as associated hardware and software, must meet the requirements of this specification as well as the latest minimum specifications posted, as of the project advertising date, at Departments web site http://www.ct.gov/dot/cwp/view.asp?a=1410&q=563904

The Contractor shall provide the Engineer, Computer Systems, Software and Related Equipment, with support and documentation.

The Contractor shall provide a licensed copy of the required software on original media and/or download information, as well as license keys. The Contractor shall also supply instructions, manuals, maintenance for future version upgrades, and customer support services offered by each software producer, for the duration of the Contract. **The peripheral required software in excess of the operating system normally installed by the computer vendor should not be preinstalled. The installation will be performed by CTDOT OIS.**

The Contractor is responsible for service and repairs to all hardware. All repairs must be performed with-in 48 hours. If the repairs require more than a 48 hours then a replacement must be provided.

The Contractor shall provide all supplies, paper, maintenance, and repairs (including labor and parts) for the computers, laptops, printers, copiers, and fax machines and other facilities required by this specification for the duration of the Contract.

Within 10 calendar days after the signing of the Contract but before ordering/purchasing the Computer System(s), Software, Digital Camera(s), Multifunction Laser Printer/Copier/Scanner/Fax, Video Projectors and Smart Board(s) as well as associated hardware and software, the Contractor must submit a copy of their proposed order(s) with catalog cuts and specifications to the Administering CTDOT District for review and approval. The Computer System(s), Software, Multifunction Laser Printer/Copier/Scanner/Fax, and Smart Board(s) will be initially reviewed by the CTDOT District personnel and forwarded to the CTDOT OIS for final approval. The digital cameras will be reviewed and approved by the CTDOT District. The Contractor shall not purchase the equipment or software until the Administering CTDOT District informs them that the proposed equipment and software is approved. The Contractor will be solely responsible for the costs of any equipment or software purchased without approval.

Prior to delivery of the computer hardware and software the Contractor should create or procure any backup media necessary to restore the operating system and any preloaded software provided (Example: the Windows software, driver disks and others necessary to reinstall the operating system.). At the conclusion of the project the Department must wipe

the hard drive for security purposes. The Department will not be responsible for returning the computer to the out of the box state. It will be the responsibility of the Contractor.

After the approval of the hardware and software, the Contractor must speak to one of the representatives at the CTDOT OIS by calling 860-594-3500, Option #1, a minimum of 2 working days in advance of the proposed delivery.

The approved computer system(s) including all hardware and software shall be delivered at the same time (all software and hardware necessary for the complete installation of the latest versions of the software listed). If all items are not delivered at the same time or the CTDOT OIS has not been contacted 2 working days in advance the delivery cannot be accepted. Digital Cameras should be delivered to the District.

All software, hardware and licenses provided shall be clearly labeled, specifying the (1) Project No., (2) Contractor Name, (3) Project Engineer's Name and (4) Project Engineer's Phone No., and shall be delivered to the CTDOT OIS , 2710 Berlin Turnpike, Newington, CT, where it will be configured and prepared for field installation. Installation will then be coordinated with CTDOT District and Project personnel and the computer system specified will be stationed in the Department's Project field office.

Once the Contract has been completed, the hardware and software will remain the property of the Contractor. Prior to the return of any computer(s) to the Contractor, field personnel will coordinate with the CTDOT OIS personnel for the hard-drive wiping and removal of Department owned equipment, software, data, and associated equipment.

First Aid Kit: The Contractor shall supply a first aid kit adequate for the number of personnel expected based on the size of the field office specified and shall keep the first aid kit stocked for the duration that the field office is in service.

Concrete Testing Equipment: If the Contract includes items that require compressive strength cylinders for concrete, in accordance with the Schedule of Minimum Testing Requirements for Sampling Materials for Test, the Contractor shall provide the following. All testing equipment will remain the property of the Contractor at the completion of the project.

A) Concrete Cylinder Curing Box – meeting the requirements of Section 6.12 of the Standard Specifications.

B) Air Meter – The air meter provided shall be in good working order and meet the requirements of AASHTO T 152.

C) Slump Cone Mold – Slump cone, base plate, and tamping rod shall be provided in like-new condition and meet the requirements of AASHTO T119, Standard Test Method for Slump of Hydraulic-Cement Concrete.

Insurance Policy: The Contractor shall provide a separate insurance policy, with no deductible, in the minimum amount of five thousand dollars ($5,000) in order to insure all State-owned data equipment and supplies used in the office against all losses. The Contractor shall be named insured on that policy, and the Department shall be an additional named insured on the policy. These losses shall include, but not be limited to: theft, fire, and physical damage. The Department will be responsible for all maintenance costs of Department owned computer hardware. In the event of loss, the Contractor shall provide replacement equipment in accordance with current Department equipment specifications, within seven days of notice of the loss. If the Contractor is unable to provide the required replacement equipment within seven days, the Department may provide replacement equipment and deduct the cost of the equipment from monies due or which may become due the Contractor under the Contract or under any other contract. The Contractor's financial liability under this paragraph shall be limited to the amount of the insurance coverage required by this paragraph. If the cost of equipment replacement required by this paragraph should exceed the required amount of the insurance coverage, the Department will reimburse the Contractor for replacement costs exceeding the amount of the required coverage.

Maintenance: During the occupancy by the Department, the Contractor shall maintain all facilities and furnishings provided under the above requirements, and shall maintain and keep the office quarters clean through the use of weekly professional cleaning to include, but not limited to, washing & waxing floors, cleaning restrooms, removal of trash, etc. Exterior areas shall be mowed and clean of debris. A trash receptacle (dumpster) with weekly pickup (trash removal) shall be provided. Snow removal, sanding and salting of all parking, walkway, and entrance ways areas shall be accomplished during a storm if on a workday during work hours, immediately after a storm and prior to the start of a workday. If snow removal, salting and sanding are not completed by the specified time, the State will provide the service and all costs incurred will be deducted from the next payment estimate.

Method of Measurement: The furnishing and maintenance of the construction field office will be measured for payment by the number of calendar months that the office is in place and in operation, rounded up to the nearest month.

There will not be any price adjustment due to any change in the minimum computer hardware and software requirements.

Basis of Payment: The furnishing and maintenance of the Construction Field Office will be paid for at the Contract unit price per month for "Construction Field Office, (Type)," which price shall include all material, equipment, labor, service contracts, licenses, software, repair or replacement of hardware and software, related supplies, utility services, parking area, external illumination, trash removal, snow and ice removal, and work incidental thereto, as well as any other costs to provide requirements of this specified this specification.

Pay Item	Pay Unit
Construction Field Office, (Type)	Month

ITEM NO. 0971001A – MAINTENANCE AND PROTECTION OF TRAFFIC

Article 9.71.01 – Description is supplemented by the following:

The Contractor shall maintain and protect traffic as described by the following and as limited in the Special Provision "Prosecution and Progress":

Route 175
The Contractor shall maintain and protect existing traffic operations.

Excepted therefrom will be those periods, during the allowable periods, when the Contractor is actively working, at which time the Contractor shall be allowed to maintain and protect a minimum of one lane of traffic, in each direction, on a paved travel path not less than 10.5 feet in width, per lane.

Stage 1

The Contractor shall maintain and protect a minimum of two lanes of traffic in each direction, each lane on a paved travel path not less than 12 feet in width.

Stage 2

The Contractor shall maintain and protect a minimum of one lane of traffic in each direction, each lane on a paved travel path not less than 10.5' in width.

Stage 3

The Contractor shall maintain and protect a minimum of two lanes of traffic in each direction, each lane on a paved travel path not less than 10.5 feet in width.

Stage 4

The Contractor shall maintain and protect a minimum of one lane of traffic in each direction, each lane on a paved travel path not less than 10.5 feet in width.

Stage 5

The Contractor shall maintain and protect a minimum of two lanes of traffic in each direction, each lane on a paved travel path not less than 12 feet in width.

Commercial and Residential Driveways

The Contractor shall maintain access to and egress from all commercial and residential driveways throughout the project limits. The Contractor will be allowed to close said driveways

to perform the required work during those periods when the businesses are closed, unless permission is granted from the business owner to close the driveway during business hours. If a temporary closure of a residential driveway is necessary, the Contractor shall coordinate with the owner to determine the time period of the closure.

Article 9.71.03 - Construction Method is supplemented as follows:

General

Unpaved travel paths will only be permitted for areas requiring full depth and full width reconstruction, in which case, the Contractor will be allowed to maintain traffic on processed aggregate for a duration not to exceed 10 calendar days. The unpaved section shall be the full width of the road and perpendicular to the travel lanes. Opposing traffic lane dividers shall be used as a centerline.

The Contractor is required to delineate any raised structures within the travel lanes, so that the structures are visible day and night, unless there are specific contract plans and provisions to temporarily lower these structures prior to the completion of work.

The Contractor shall schedule operations so that pavement removal and roadway resurfacing shall be completed full width across a roadway (bridge) section by the end of a workday (work night), or as directed by the Engineer.

When the installation of all intermediate courses of bituminous concrete pavement is completed for the entire roadway, the Contractor shall install the final course of bituminous concrete pavement.

When the Contractor is excavating adjacent to the roadway, the Contractor shall provide a 3-foot shoulder between the work area and travel lanes, with traffic drums spaced every 50 feet. At the end of the workday, if the vertical drop-off exceeds 3 inches, the Contractor shall provide a temporary traversable slope of 4:1 or flatter that is acceptable to the Engineer.

The Contractor shall not store any material on-site which would present a safety hazard to motorists or pedestrians (e.g. fixed object or obstruct sight lines).

The field installation of a signing pattern shall constitute interference with existing traffic operations and shall not be allowed, except during the allowable periods.

Construction vehicles entering travel lanes at speeds less than the posted speed are interfering with traffic, and shall not be allowed without a lane closure. The lane closure shall be of sufficient length to allow vehicles to enter or exit the work area at posted speeds, in order to merge with existing traffic.

Existing Signing

The Contractor shall maintain all existing side-mounted signs throughout the project limits during the duration of the project. The Contractor shall temporarily relocate signs and sign supports as many times as deemed necessary, and install temporary sign supports if necessary and as directed by the Engineer.

Requirements for Winter

The Contractor shall schedule a meeting with representatives from the Department including the offices of Maintenance and Traffic, and the Town/City to determine what interim traffic control measures the Contractor shall accomplish for the winter to provide safety to the motorists and permit adequate snow removal procedures. This meeting shall be held prior to October 31 of each year and will include, but not be limited to, discussion of the status and schedule of the following items: lane and shoulder widths, pavement restoration, traffic signal work, pavement markings, and signing.

Signing Patterns

The Contractor shall erect and maintain all signing patterns in accordance with the traffic control plans contained herein. Proper distances between advance warning signs and proper taper lengths are mandatory.

Pavement Markings

The Contractor will be responsible for the furnishing of all pavement markings, either temporary or permanent. The Contractor shall repaint roadways as directed by the engineer. This work will be paid for under the appropriate pavement marking items.

The Contractor is alerted that all pavement markings must be in place by the end of the work day for any roadway to be opened on that day.

Pavement Markings -Non-Limited Access Multilane Roadways
Secondary and Local Roadways
During construction, the Contractor shall maintain all pavement markings on paved surfaces on all roadways throughout the limits of the project.

Interim Pavement Markings
The Contractor shall install painted pavement markings, which shall include centerlines, shoulder edge lines, lane lines (broken lines), lane-use arrows, and stop bars, on each intermediate course of bituminous concrete pavement and on any milled surface by the end of the work day/night. If the next course of bituminous concrete pavement will be placed within seven days, shoulder edge lines are not required. The painted pavement markings will be paid under the appropriate items.

If the Contractor will install another course of bituminous concrete pavement within 24 hours, the Contractor may install Temporary Plastic Pavement Marking Tape in place of the painted pavement markings by the end of the work day/night. These temporary pavement markings shall include centerlines, lane lines (broken lines) and stop bars; shoulder edge lines are not required. Centerlines shall consist of two 4 inch wide yellow markings, 2 feet in length, side by side, 4 to 6 inches apart, at 40-foot intervals. No passing zones should be posted with signs in those areas where the final centerlines have not been established on two-way roadways. Stop bars may consist of two 6 inch wide white markings or three 4 inch wide white markings placed side by side. The Contractor shall remove and dispose of the Temporary Plastic Pavement Marking Tape when another course of bituminous concrete pavement is installed. The cost of furnishing, installing and removing the Temporary Plastic Pavement Marking Tape shall be at the Contractor's expense.

If an intermediate course of bituminous concrete pavement will be exposed throughout the winter, then Epoxy Resin Pavement Markings should be installed unless directed otherwise by the Engineer.

Final Pavement Markings

The Contractor should install painted pavement markings on the final course of bituminous concrete pavement by the end of the work day/night. If the painted pavement markings are not installed by the end of the work day/night, then Temporary Plastic Pavement Marking Tape shall be installed as described above and the painted pavement markings shall be installed by the end of the work day/night on Friday of that week.

If Temporary Plastic Pavement Marking Tape is installed, the Contractor shall remove and dispose of these markings when the painted pavement markings are installed. The cost of furnishing, installing and removing the Temporary Plastic Pavement Marking Tape shall be at the Contractor's expense.

The Contractor shall install permanent Epoxy Resin Pavement Markings in accordance with Section 12.10 entitled "Epoxy Resin Pavement Markings, Symbols, and Legends" after such time as determined by the Engineer.

TRAFFIC CONTROL DURING CONSTRUCTION OPERATIONS

The following guidelines shall assist field personnel in determining when and what type of traffic control patterns to use for various situations. These guidelines shall provide for the safe and efficient movement of traffic through work zones and enhance the safety of work forces in the work area.

TRAFFIC CONTROL PATTERNS

Traffic control patterns shall be used when a work operation requires that all or part of any vehicle or work area protrudes onto any part of a travel lane or shoulder. For each situation, the installation of traffic control devices shall be based on the following:

Speed and volume of traffic
Duration of operation
Exposure to hazards

Traffic control patterns shall be uniform, neat and orderly so as to command respect from the motorist.

In the case of a horizontal or vertical sight restriction in advance of the work area, the traffic control pattern shall be extended to provide adequate sight distance for approaching traffic.

If a lane reduction taper is required to shift traffic, the entire length of the taper should be installed on a tangent section of roadway so that the entire taper area can be seen by the motorist.

Any existing signs that are in conflict with the traffic control patterns shall be removed, covered, or turned so that they are not readable by oncoming traffic.

When installing a traffic control pattern, a Buffer Area should be provided and this area shall be free of equipment, workers, materials and parked vehicles.

Typical traffic control plans 19 through 25 may be used for moving operations such as line striping, pot hole patching, mowing, or sweeping when it is necessary for equipment to occupy a travel lane.

Traffic control patterns will not be required when vehicles are on an emergency patrol type activity or when a short duration stop is made and the equipment can be contained within the shoulder. Flashing lights and appropriate trafficperson shall be used when required.

Although each situation must be dealt with individually, conformity with the typical traffic control plans contained herein is required. In a situation not adequately covered by the typical traffic control plans, the Contractor must contact the Engineer for assistance prior to setting up a traffic control pattern.

PLACEMENT OF SIGNS

Signs must be placed in such a position to allow motorists the opportunity to reduce their speed prior to the work area. Signs shall be installed on the same side of the roadway as the work area. On multi-lane divided highways, advance warning signs shall be installed on both sides of the highway. On directional roadways (on-ramps, off-ramps, one-way roads), where the sight distance to signs is restricted, these signs should be installed on both sides of the roadway.

ALLOWABLE ADJUSTMENT OF SIGNS AND DEVICES SHOWN ON THE TRAFFIC CONTROL PLANS

The traffic control plans contained herein show the location and spacing of signs and devices under ideal conditions. Signs and devices should be installed as shown on these plans whenever possible.

The proper application of the traffic control plans and installation of traffic control devices depends on actual field conditions.

Adjustments to the traffic control plans shall be made only at the direction of the Engineer to improve the visibility of the signs and devices and to better control traffic operations. Adjustments to the traffic control plans shall be based on safety of work forces and motorists, abutting property requirements, driveways, side roads, and the vertical and horizontal curvature of the roadway.

The Engineer may require that the traffic control pattern be located significantly in advance of the work area to provide better sight line to the signing and safer traffic operations through the work zone.

Table I indicates the minimum taper length required for a lane closure based on the posted speed limit of the roadway. These taper lengths shall only be used when the recommended taper lengths shown on the traffic control plans cannot be achieved.

TABLE I – MINIMUM TAPER LENGTHS

POSTED SPEED LIMIT MILES PER HOUR	MINIMUM TAPER LENGTH IN FEET FOR A SINGLE LANE CLOSURE
30 OR LESS	180
35	250
40	320
45	540
50	600
55	660
65	780

SECTION 1. WORK ZONE SAFETY MEETINGS

1.a) Prior to the commencement of work, a work zone safety meeting will be conducted with representatives of DOT Construction, Connecticut State Police (Local Barracks), Municipal Police, the Contractor (Project Superintendent) and the Traffic Control Subcontractor (if different than the prime Contractor) to review the traffic operations, lines of responsibility, and operating guidelines which will be used on the project. Other work zone safety meetings during the course of the project should be scheduled as needed.

1.b) A Work Zone Safety Meeting Agenda shall be developed and used at the meeting to outline the anticipated traffic control issues during the construction of this project. Any issues that can't be resolved at these meetings will be brought to the attention of the District Engineer and the Office of Construction. The agenda should include:

- Review Project scope of work and time
- Review Section 1.08, Prosecution and Progress
- Review Section 9.70, Trafficpersons
- Review Section 9.71, Maintenance and Protection of Traffic
- Review Contractor's schedule and method of operations.
- Review areas of special concern: ramps, turning roadways, medians, lane drops, etc.
- Open discussion of work zone questions and issues
- Discussion of review and approval process for changes in contract requirements as they relate to work zone areas

SECTION 2. GENERAL

2.a) If the required minimum number of signs and equipment (i.e. one High Mounted Internally Illuminated Flashing Arrow for each lane closed, two TMAs, Changeable Message Sign, etc.) are not available; the traffic control pattern shall not be installed.

2.b) The Contractor shall have back-up equipment (TMAs, High Mounted Internally Illuminated Flashing Arrow, Changeable Message Sign, construction signs, cones/drums, etc.) available at all times in case of mechanical failures, etc. The only exception to this is in the case of sudden equipment breakdowns in which the pattern may be installed but the Contractor must provide replacement equipment within 24 hours.

2.c) Failure of the Contractor to have the required minimum number of signs, personnel and equipment, which results in the pattern not being installed, shall not be a reason for a time extension or claim for loss time.

2.d) In cases of legitimate differences of opinion between the Contractor and the Inspection staff, the Inspection staff shall err on the side of safety. The matter shall be brought to

the District Office for resolution immediately or, in the case of work after regular business hours, on the next business day.

SECTION 3. INSTALLING AND REMOVING TRAFFIC CONTROL PATTERNS

3.a) Lane Closures shall be installed beginning with the advance warning signs and proceeding forward toward the work area.

3.b) Lane Closures shall be removed in the reverse order, beginning at the work area, or end of the traffic control pattern, and proceeding back toward the advance warning signs.

3.c) Stopping traffic may be allowed:

- As per the contract for such activities as blasting, steel erection, etc.
- During paving, milling operations, etc. where, in the middle of the operation, it is necessary to flip the pattern to complete the operation on the other half of the roadway and traffic should not travel across the longitudinal joint or difference in roadway elevation.
- To move slow moving equipment across live traffic lanes into the work area.

3.d) Under certain situations when the safety of the traveling public and/or that of the workers may be compromised due to conditions such as traffic volume, speed, roadside obstructions, or sight line deficiencies, as determined by the Engineer and/or State Police, traffic may be briefly impeded while installing and/or removing the advance warning signs and the first ten traffic cones/drums only. Appropriate measures shall be taken to safely slow traffic. If required, traffic slowing techniques may be used and shall include the use of Truck Mounted Impact Attenuators (TMAs) as appropriate, for a minimum of one mile in advance of the pattern starting point. Once the advance warning signs and the first ten traffic cones/drums are installed/removed, the TMAs and sign crew shall continue to install/remove the pattern as described in Section 5 and traffic shall be allowed to resume their normal travel.

3.e) The Contractor must adhere to using the proper signs, placing the signs correctly, and ensuring the proper spacing of signs.

3.f) Additional devices are required on entrance ramps, exit ramps, and intersecting roads to warn and/or move traffic into the proper travel path prior to merging/exiting with/from the main line traffic. This shall be completed before installing the mainline pattern past the ramp or intersecting roadway.

3.g) Prior to installing a pattern, any conflicting existing signs shall be covered with an opaque material. Once the pattern is removed, the existing signs shall be uncovered.

3.h) On limited access roadways, workers are prohibited from crossing the travel lanes to install and remove signs or other devices on the opposite side of the roadway. Any signs or devices on the opposite side of the roadway shall be installed and removed separately.

SECTION 4. USE OF HIGH MOUNTED INTERNALLY ILLUMINATED FLASHING ARROW

4.a) On limited access roadways, one Flashing Arrow shall be used for each lane that is closed. The Flashing Arrow shall be installed concurrently with the installation of the traffic control pattern and its placement shall be as shown on the traffic control plan. For multiple lane closures, one Flashing Arrow is required for each lane closed. If conditions warrant, additional Flashing Arrows should be employed (i.e.: curves, major ramps, etc.).

4.b) On non-limited access roadways, the use of a Flashing Arrow for lane closures is optional. The roadway geometry, sight line distance, and traffic volume should be considered in the decision to use the Flashing Arrow.

4.c) The Flashing Arrow shall not be used on two lane, two-way roadways for temporary alternating one-way traffic operations.

4.d) The Flashing Arrow board display shall be in the "arrow" mode for lane closure tapers and in the "caution" mode (four corners) for shoulder work, blocking the shoulder, or roadside work near the shoulder. The Flashing Arrow shall be in the "caution" mode when it is positioned in the closed lane.

4.e) The Flashing Arrow shall not be used on a multi-lane roadway to laterally shift all lanes of traffic, because unnecessary lane changing may result.

SECTION 5. USE OF TRUCK MOUNTED IMPACT ATTENUATOR VEHICLES (TMAs)

5.a) For lane closures on limited access roadways, a minimum of two TMAs shall be used to install and remove traffic control patterns. If two TMAs are not available, the pattern shall not be installed.

5.b) On non-limited access roadways, the use of TMAs to install and remove patterns closing a lane(s) is optional. The roadway geometry, sight line distance, and traffic volume should be considered in the decision to utilize the TMAs.

5.c) Generally, to establish the advance and transition signing, one TMA shall be placed on the shoulder and the second TMA shall be approximately 1,000 feet ahead blocking the lane. The flashing arrow board mounted on the TMA should be in the "flashing arrow" mode when taking the lane. The sign truck and workers should be immediately ahead of

the second TMA. In no case shall the TMA be used as the sign truck or a work truck. Once the transition is in place, the TMAs shall travel in the closed lane until all Changeable Message Signs, signs, Flashing Arrows, and cones/drums are installed. The flashing arrow board mounted on the TMA should be in the "caution" mode when traveling in the closed lane.

5.d) A TMA shall be placed prior to the first work area in the pattern. If there are multiple work areas within the same pattern, then additional TMAs shall be positioned at each additional work area as needed. The flashing arrow board mounted on the TMA should be in the "caution" mode when in the closed lane.

5.e) TMAs shall be positioned a sufficient distance prior to the workers or equipment being protected to allow for appropriate vehicle roll-ahead in the event that the TMA is hit, but not so far that an errant vehicle could travel around the TMA and into the work area. For additional placement and use details, refer to the specification entitled "Type 'D' Portable Impact Attenuation System". Some operations, such as paving and concrete repairs, do not allow for placement of the TMA(s) within the specified distances. In these situations, the TMA(s) should be placed at the beginning of the work area and shall be advanced as the paving or concrete operations proceed.

5.f) TMAs should be paid in accordance with how the unit is utilized. When it is used as a TMA and is in the proper location as specified, and then it should be paid at the specified hourly rate for "Type 'D' Portable Impact Attenuation System". When the TMA is used as a Flashing Arrow, it should be paid at the daily rate for "High Mounted Internally Illuminated Flashing Arrow". If a TMA is used to install and remove a pattern and then is used as a Flashing Arrow, the unit should be paid as a "Type 'D' Portable Impact Attenuation System" for the hours used to install and remove the pattern, typically 2 hours (1 hour to install and 1 hour to remove), and is also paid for the day as a "High Mounted Internally Illuminated Flashing Arrow".

SECTION 6. USE OF TRAFFIC DRUMS AND TRAFFIC CONES

6.a) Traffic drums shall be used for taper channelization on limited-access roadways, ramps, and turning roadways and to delineate raised catch basins and other hazards.

6.b) Traffic drums shall be used in place of traffic cones in traffic control patterns that are in effect for more than a 36-hour duration.

6.c) Traffic Cones less than 42 inches in height shall not be used on limited-access roadways or on non-limited access roadways with a posted speed limit of 45 mph and above.

6.d) Typical spacing of traffic drums and/or cones shown on the Traffic Control Plans in the Contract are maximum spacings and may be reduced to meet actual field conditions as required.

SECTION 7. USE OF (REMOTE CONTROLLED) CHANGEABLE MESSAGE SIGNS (CMS)

7.a) For lane closures on limited access roadways, one CMS shall be used in advance of the traffic control pattern. Prior to installing the pattern, the CMS shall be installed and in operation, displaying the appropriate lane closure information (i.e.: Left Lane Closed - Merge Right). The CMS shall be positioned ½ - 1 mile ahead of the lane closure taper. If the nearest Exit ramp is greater than the specified ½ - 1 mile distance, than an additional CMS shall be positioned a sufficient distance ahead of the Exit ramp to alert motorists to the work and therefore offer them an opportunity to take the exit.

7.b) CMS should not be installed within 1000 feet of an existing CMS.

7.c) On non-limited access roadways, the use of CMS for lane closures is optional. The roadway geometry, sight line distance, and traffic volume should be considered in the decision to use the CMS.

7.d) The advance CMS is typically placed off the right shoulder, 5 feet from the edge of pavement. In areas where the CMS cannot be placed beyond the edge of pavement, it may be placed on the paved shoulder with a minimum of five (5) traffic drums placed in a taper in front of it to delineate its position. The advance CMS shall be adequately protected if it is used for a continuous duration of 36 hours or more.

7.e) When the CMS are no longer required, they should be removed from the clear zone and have the display screen cleared and turned 90° away from the roadway.

7.f) The CMS generally should not be used for generic messages (ex: Road Work Ahead, Bump Ahead, Gravel Road, etc.).

7.g) The CMS should be used for specific situations that need to command the motorist's attention which cannot be conveyed with standard construction signs (Examples include: Exit 34 Closed Sat/Sun - Use Exit 35, All Lanes Closed - Use Shoulder, Workers on Road - Slow Down).

7.h) Messages that need to be displayed for long periods of time, such as during stage construction, should be displayed with construction signs. For special signs, please coordinate with the Office of Construction and the Division of Traffic Engineering for the proper layout/dimensions required.

7.i) The messages that are allowed on the CMS are as follows:

Message No.	Frame 1	Frame 2	Message No.	Frame 1	Frame 2
1	LEFT LANE CLOSED	MERGE RIGHT	9	LANES CLOSED AHEAD	REDUCE SPEED
2	2 LEFT LANES CLOSED	MERGE RIGHT	10	LANES CLOSED AHEAD	USE CAUTION
3	LEFT LANE CLOSED	REDUCE SPEED	11	WORKERS ON ROAD	REDUCE SPEED
4	2 LEFT LANES CLOSED	REDUCE SPEED	12	WORKERS ON ROAD	SLOW DOWN
5	RIGHT LANE CLOSED	MERGE LEFT	13	EXIT XX CLOSED	USE EXIT YY
6	2 RIGHT LANES CLOSED	MERGE LEFT	14	EXIT XX CLOSED USE YY	FOLLOW DETOUR
7	RIGHT LANE CLOSED	REDUCE SPEED	15	2 LANES SHIFT AHEAD	USE CAUTION
8	2 RIGHT LANES CLOSED	REDUCE SPEED	16	3 LANES SHIFT AHEAD	USE CAUTION

For any other message(s), approval must be received from the Office of Construction prior to their use. No more than two (2) displays shall be used within any message cycle.

SECTION 8. USE OF STATE POLICE OFFICERS

8.a) State Police may be utilized only on limited access highways and secondary roadways under their primary jurisdiction. One Officer may be used per critical sign pattern. Shoulder closures and right lane closures can generally be implemented without the presence of a State Police Officer. Likewise in areas with moderate traffic and wide, unobstructed medians, left lane closures can be implemented without State Police presence. Under some situations it may be desirable to have State Police presence, when one is available. Examples of this include: nighttime lane closures; left lane closures with minimal width for setting up advance signs and staging; lane and shoulder closures on turning roadways/ramps or mainline where sight distance is minimal; and closures where extensive turning movements or traffic congestion regularly occur, however they are not required.

8.b) Once the pattern is in place, the State Police Officer should be positioned in a non-hazardous location in advance of the pattern If traffic backs up beyond the beginning of the pattern, then the State Police Officer shall be repositioned prior to the backup to give warning to the oncoming motorists. The State Police Officer and TMA should not be in proximity to each other.

8.c) Other functions of the State Police Officer(s) may include:

- Assisting entering/exiting construction vehicles within the work area.
- Enforcement of speed and other motor vehicle laws within the work area, if specifically requested by the project.

8.d) State Police Officers assigned to a work site are to only take direction from the Engineer.

NOTES FOR TRAFFIC CONTROL PLANS

1. IF A TRAFFIC STOPPAGE OCCURS IN ADVANCE OF SIGN (A), THEN AN ADDITIONAL SIGN (A) SHALL BE INSTALLED IN ADVANCE OF THE STOPPAGE.

2. SIGNS (AA), (A), AND (D) SHOULD BE OMITTED WHEN THESE SIGNS HAVE ALREADY BEEN INSTALLED TO DESIGNATE A LARGER WORK ZONE THAN THE WORK ZONE THAT IS ENCOMPASSED ON THIS PLAN.

3. SEE TABLE 1 FOR ADJUSTMENT OF TAPERS IF NECESSARY.

4. IF THIS PLAN REMAINS IN CONTINUOUS OPERATION FOR MORE THAN 36 HOURS, THEN TRAFFIC DRUMS SHALL BE USED IN PLACE OF TRAFFIC CONES.

5. ANY LEGAL SPEED LIMIT SIGNS WITHIN THE LIMITS OF A ROADWAY / LANE CLOSURE AREA SHALL BE COVERED WITH AN OPAQUE MATERIAL WHILE THE CLOSURE IS IN EFFECT, AND UNCOVERED WHEN THE ROADWAY / LANE CLOSURE IS RE-OPENED TO ALL LANES OF TRAFFIC.

6. IF THIS PLAN REMAINS IN CONTINUOUS OPERATION FOR MORE THAN 36 HOURS, THEN ANY EXISTING CONFLICTING PAVEMENT MARKINGS SHALL BE ERADICATED OR COVERED, AND TEMPORARY PAVEMENT MARKINGS THAT DELINEATE THE PROPER TRAVELPATHS SHALL BE INSTALLED.

7. DISTANCES BETWEEN SIGNS IN THE ADVANCE WARNING AREA MAY BE REDUCED TO 100' ON LOW-SPEED URBAN ROADS (SPEED LIMIT < 40 MPH).

8. IF THIS PLAN IS TO REMAIN IN OPERATION DURING THE HOURS OF DARKNESS, INSTALL BARRICADE WARNING LIGHTS - HIGH INTENSITY ON ALL POST-MOUNTED DIAMOND SIGNS IN THE ADVANCE WARNING AREA.

9. A CHANGEABLE MESSAGE SIGN SHALL BE INSTALLED ONE HALF TO ONE MILE IN ADVANCE OF THE LANE CLOSURE TAPER.

10 SIGN (P) SHALL BE MOUNTED A MINIMUM OF 7 FEET FROM THE PAVEMENT SURFACE TO THE BOTTOM OF THE SIGN.

TABLE 1 - MINIMUM TAPER LENGTHS

POSTED SPEED LIMIT (MILES PER HOUR)	MINIMUM TAPER LENGTH FOR A SINGLE LANE CLOSURE
30 OR LESS	180' (55m)
35	250' (75m)
40	320' (100m)
45	540' (165m)
50	600' (180m)
55	660' (200m)
65	780' (240m)

METRIC CONVERSION CHART (1" = 25mm)

ENGLISH	METRIC	ENGLISH	METRIC	ENGLISH	METRIC
12"	300mm	42"	1050mm	72"	1800mm
18"	450mm	48"	1200mm	78"	1950mm
24"	600mm	54"	1350mm	84"	2100mm
30"	750mm	60"	1500mm	90"	2250mm
36"	900mm	66"	1650mm	96"	2400mm

SCALE: NONE

CONSTRUCTION TRAFFIC CONTROL PLAN

NOTES

CONNECTICUT DEPARTMENT OF TRANSPORTATION
BUREAU OF ENGINEERING & CONSTRUCTION

APPROVED Charles S. Harlow 2012.06.05 15:50:35-04'00'
PRINCIPAL ENGINEER

I

WORK IN RIGHT LANE - 4 LANE UNDIVIDED HIGHWAY

SIGN FACE
86 SQ. FT (MIN.)

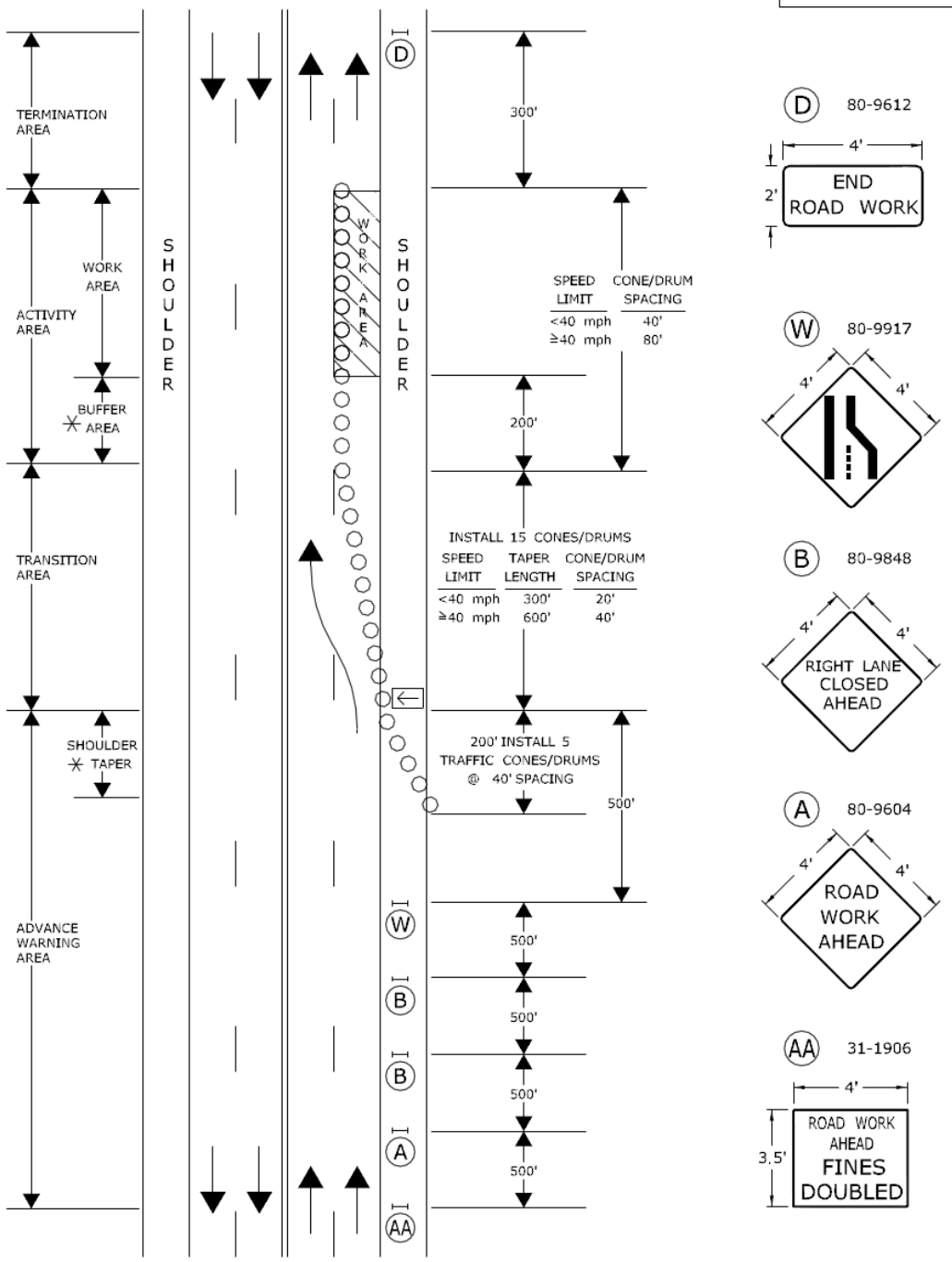

TRAFFIC CONE **OR** TRAFFIC DRUM
OPTIONAL TRAFFIC DRUM PORTABLE SIGN SUPPORT
HIGH MOUNTED INTERNALLY ILLUMINATED FLASHING ARROW

SCALE: NONE

CONSTRUCTION TRAFFIC CONTROL PLAN

PLAN 10

SEE NOTES 1, 2, 3, 4, 5, 6, 7, 8

CONNECTICUT DEPARTMENT OF TRANSPORTATION
BUREAU OF ENGINEERING & CONSTRUCTION

APPROVED Charles S. Harlow 2012.06.05 15:54:15-04'00'
PRINCIPAL ENGINEER

Article 9.71.05 – Basis of Payment is supplemented by the following:

The temporary relocation of signs and supports, and the furnishing, installation and removal of any temporary supports shall be paid for under the item "Maintenance and Protection of Traffic". Temporary overhead sign supports and foundations shall be paid for under the appropriate item(s).

The cost of furnishing, installing, and removing the material for the 4H:1V traversable slope shall be paid for under the item "Maintenance and Protection of Traffic."

ITEM #0974001A - REMOVAL OF EXISTING MASONRY

Work under this item shall conform to the requirement of Section 9.74 of Form 816, amended as follows:

9.74.01 – Description: Delete the only paragraph and replace with the following:

This work shall include the complete removal and satisfactory disposal of the existing concrete substructure to limits as shown on plans on both abutments and wingwalls. This work shall also include the coating of the reinforcing steel and concrete with epoxy resin as directed by the Engineer. Also included is saw-cutting, line drilling and the removal of portion of backwall to create a level surface as shown on the plans and as directed by the Engineer.

9.74.02 – Materials: Add the following section:

The materials shall conform to the following requirements: The epoxy resin shall be a two component system. The base polymer shall be a thermosetting resin of the epoxy type. The epoxy resin shall be composed of 100% reactive constituents, which are a condensation product of the reaction of epichlorohydrin with bisphenol ether of bisphenol A, containing no more than trace amounts of hydrolyzable chloride. The epoxy resin shall have an epoxide equivalent between 465 and 530.

The reacting system shall consist of a blend of condensation polymers of dimerized and trimerized unsaturated fatty acids and an aliphatic polyamine.

Unless otherwise specified, pigmentation shall be required in the system so that the cured coating shall conform to the Federal Color Standard 595, No. 16357.

a) Physical Requirements of (Mixed) Epoxy Resin System:

A mixture of both components in the proportions recommended by the manufacturer shall conform to the following requirements:

Viscosity - 500 to 800 centipoises at 77°F Pot life- hours minimum at 75°F Minimum solids content - 48%

The cured system shall not exhibit amine blushing or sweating.

When testing for abrasion by ASTM Designation D968, the pigmented finish coats shall require a minimum of 50 liters of sand to abrade a one mil thickness of coating.

A 2½ mil dry film thickness of the coating tested according to ASTM Designation D522 shall pass a 1/8-inch diameter mandrel test without splitting the film or causing loss of bond.

b) Sampling:

A representative sample of each component sufficient for the test specified shall be taken by a Department representative either from a well-blended bulk lot prior to packaging or by withdrawing 3 fluid ounce samples from no less than 5 percent by random selection of the containers comprising the lot or shipment. Unless the samples of the same component taken from containers show evidence of variability, they may be blended into a single composite sample to represent that component. The entire lot of both components may be rejected if samples submitted for testing fail to meet any requirements of this specification.

c) Packaging and Marking:

The two components of the epoxy resin system furnished under these specifications shall be supplied in separate containers, which are non-reactive with the materials contained therein. The size of the container shall be such that the recommended proportions of the final mixture can be obtained by combining one container of one component with one or more whole containers of the other component.

Containers shall be identified as base polymer and reacting system, and shall show the mixing directions and usable temperature range as defined by these specifications. Each container shall be marked with the name of the manufacturer, the lot or batch number, the date of packaging, pigmentation if any, and the quantity contained therein in pounds and gallons.

Printed instructions from the manufacturer for mixing and applying the material shall be included.

Potential hazards shall be so stated on the package in accordance with the Federal
Hazardous Products Labeling Act.

d) Control of Materials:

A Materials Certificate will be required in accordance with Article 1.06.07, certifying the conformance of the epoxy resin to the requirements set forth in this specification.

9.74.03 – Construction Methods: Add the following:

Removal of concrete shall conform to the requirements of Article 9.74.03, supplemented with the following.

Care shall be taken not to damage the portion of the abutment that is to remain in place. Maximum 30 lb. pneumatic hammers or any other method approved by the Engineer shall be used to remove concrete for general removal while maximum 15 lb hammers shall be used near reinforcing steel that is to remain. Pneumatic tools shall not be placed in direct contact with the reinforcing steel that is to remain.

All debris shall be removed from the shield daily and be disposed of, from the site, by the Contractor.

Prior to the removal of any concrete, the Contractor shall make a ½" sawcut to delineate the limits of the existing concrete to be removed. The surface on which the concrete is to be poured shall be intentionally roughened to a depth of ½".

Removal of concrete material shall be such as to facilitate uniform placement of fresh concrete. All upper areas of excavated voids shall slope evenly out to preclude entrapping air and forming hollow spots in the freshly placed concrete. Care shall be taken not to damage existing reinforcing to remain.

The concrete surface and exposed reinforcing steel, if any, which is to receive the coating material shall be cleaned of all loose or powder-like rust, oil, dust, dirt, loose particles, and other bond inhibiting matter just prior to coating.

The epoxy resin shall be mixed in accordance with the manufacturer's instructions. Also in accordance with the manufacturer's instructions, two coats of the mixed material shall be applied in uniform coats of approximately 2 to 3 mil dry film thickness each.

9.74.05 – Basis of Payment: Delete in its entirety and replace with the following:

This work will be paid for at the contract unit price per cubic yard for "Removal of Existing Masonry", which price shall include all equipment, tools and labor incidental to the removal of the material and the proper disposal thereof as directed by the Engineer.

ITEM #1131001A - CHANGEABLE MESSAGE SIGN
ITEM #1131002A - REMOTE CONTROLLED CHANGEABLE MESSAGE SIGN
ITEM #1131005A - CHANGEABLE MESSAGE SIGN WITH RADAR
ITEM #1131006A - REMOTE CONTROLLED CHANGEABLE MESSAGE SIGN WITH RADAR

Description: Work under this item shall include furnishing and maintaining a trailer-mounted, "Changeable Message Sign", "Remote Controlled Changeable Message Sign", "Changeable Message Sign with Radar", or "Remote Controlled Changeable Message Sign with Radar" whichever is applicable, at the locations indicated on the plans or as directed by the Engineer.

Materials: The full matrix, internally illuminated variable message sign shall consist of a LED, fiber optic, lamp matrix, or hybrid magnetically operated matrix – LED message board; and a computer operated interface, all mounted on a towable, heavy duty trailer.

The sign shall have a minimum horizontal dimension of 115 inches and rotate a complete 360 degrees atop the lift mechanism.

In the raised position, the bottom of the sign shall be at least 7 feet above the roadway. The messages displayed shall be visible from a distance of 1/2 mile and be clearly legible from a distance of 900 feet during both the day and night.

The lighting system shall be controlled both manually and by a photocell for automatic sign dimming during nighttime use.

The sign shall be capable of storing a minimum of 100 preprogrammed messages and be able to display any one of those messages upon call from the trailer mounted terminal and/or through the cellular telephone hookup for the remote controlled sign.

The sign shall be a full matrix sign that is able to display messages composed of any combination of alphanumeric text, punctuation symbols, and graphic images (notwithstanding NTCIP limitations). The display shall be capable of producing arrow functions. Full- matrix displays shall allow the use of graphics, traffic safety symbols and various character heights.

Standard messages shall be displayed in a three-line message format with 8 characters per line. The letter height shall not be less than 18 inches.

The sign shall utilize yellow green for the display with a black background. Each matrix shall have a minimum size of 6 x 9 pixels. Each pixel shall utilize a minimum of four high output yellow green LEDs or equivalent light source. The LEDs or light source shall have a minimum

1.4 candela luminance intensity, 22 degrees viewing angle, and wavelength of 590 (+/- 3) nanometers.

For hybrid magnetically operated matrix – LED matrix, each pixel shall have one single shutter faced with yellow green retro-reflective sheeting with a minimum of four high output yellow green LEDs or equivalent light source. The hybrid magnetically operated matrix – LED matrix sign shall be capable of operating in three display modes; shutter only, LED only, and both LED and shutter. These modes shall be automatically controlled by a photocell for day and night conditions and also capable of being manually controlled through the software.

The sign shall be controlled by an on-board computer. The sign shall automatically change to a preselected default message upon failure. That default message shall remain on display until the problem is corrected.

The sign shall include all necessary controls, including, but not limited to, personal computer, keyboard or alphanumeric hand-held keyboard, and software. The sign shall interface with PCs, cellular phones, and radar speed detection devices as required.

Controls shall be furnished for raising and lowering the message board, aligning the message board and, for solar powered units, a read-out of the battery bank charge.

Power shall be provided by a self-contained solar maintained power source or a diesel engine driven generator. Hardware for connection to a 110-volt power source shall also be provided.

Solar powered signs shall display programmed messages with the solar panel disconnected, in full night conditions, for a minimum of 30 consecutive days.

Remote Controlled Changeable Message Signs shall include one (1) industrial-grade cellular telephone and be equipped with a modem to control the sign and a security system to prevent unauthorized access. The security system shall allow access only through use of a code or password unique to that sign. If the proper code or password is not entered within 60 seconds of initial telephone contact, the call will be terminated. Remote control for the Remote Controlled Changeable Message Sign shall be by cellular telephone and touch tone modem decoder.

The radar equipped signs shall include a high-speed electronic control module (ECM-X), Radar SI transceiver, signal processing board and radar logging software.

The radar software will operate the sign in four modes:
1) The sign will display words “YOUR SPEED” followed by the speed (2 digits). The display will repeat the message as long as vehicles are detected. The sign will blank when no vehicles are present.
2) The sign will display a series of up to six messages (programmed by the user) when a preset speed (programmed by the user) is exceeded. The sign will blank when no vehicles are present.
3) Will perform like mode #2 with the addition of displaying the actual speed with it.

4) The sign will work as a standard Changeable Message Sign or Remote Controlled Changeable Message Sign with no radar.

Construction Methods: The Contractor shall furnish, place, operate, maintain and relocate the sign as required. When the sign is no longer required, it shall be removed and become the property of the Contractor. The cellular telephone required for the Remote Controlled Changeable Message Sign shall be provided to the Engineer for his use, and subsequently returned to the Contractor.

When the sign is not in use, it shall either be turned off with a blank display or turned from view.

Any signs that are missing, damaged, defaced or improperly functioning so that they are not effective, as determined by the Engineer and in accordance with the ATSSA guidelines contained in "Quality Standards for Work Zone Traffic Control Devices," shall be replaced by the Contractor at no cost to the State.

Method of Measurement: This work will be measured for payment for each "Changeable Message Sign", "Remote Controlled Changeable Message Sign", "Changeable Message Sign with Radar", or "Remote Controlled Changeable Message Sign with Radar", whichever applies, furnished and installed, for the number of calendar days that the sign is in place and in operation, measured to the nearest day. When a sign is in operation for less than a day, such a period of time shall be considered to be a full day regardless of actual time in operation.

Basis of Payment: This work will be paid for at the Contract unit price per day for each "Changeable Message Sign", "Remote Controlled Changeable Message Sign", "Changeable Message Sign with Radar", or "Remote Controlled Changeable Message Sign with Radar" which price shall include placing, maintaining, relocating and removing the sign and its appurtenances and all material, labor, tools and equipment incidental thereto. Additionally, for the "Remote Controlled Changeable Message Sign", or "Remote Controlled Changeable Message Sign with Radar", the cellular telephone service and telephone charges shall be included.

Pay Item	Pay Unit
Changeable Message Sign	Day
Remote Controlled Changeable Message Sign	Day
Changeable Message Sign with Radar	Day
Remote Controlled Changeable Message Sign with Radar	Day

ITEM #1803071A - TYPE B IMPACT ATTENUATION SYSTEM (TANGENTIAL)

Description: This item shall consist of furnishing and installing an impact attenuation system for use as a metal beam rail terminal where shown on the design plans, in accordance with the Manufacturer's details and specifications including reflective sheeting for delineation.

Performance Criteria: This attenuation system shall be a crash tested device having approval in writing from FHWA conforming to the requirements in National Cooperative Highway Research Program (NCHRP) Report 350 or the AASHTO Manual for Assessing Safety Hardware (MASH).

Materials: The materials shall conform to the following requirements:

1) The material for the posts for this system shall be steel. All material shall meet the Manufacturer's specification for the latest version of a Tangential system chosen from the Department's Qualified Products List.
2) The Contractor shall submit a material certificate or certificate of compliance for each system supplied as defined in Article 1.06.07.
3) A Type III reflective sheeting shall be provided in conformance with Subarticle M18.09.01 and Connecticut Traffic Standard Sheet TR-1205_01, Sign #50-5032 or as provided by the Manufacturer.

Construction Methods: The impact attenuation system shall be installed in a neat and workman like manner at the location(s) shown on the plans and constructed in conformance with the Manufacturer's details. The reflective sheeting shall be installed on the nose of the impact attenuation system.

Failure to comply: In the event that, in the judgment of the Engineer, the Impact Attenuation system is not maintained adequately and/or safely on any part of the project, or the Contractor does not move or relocate traffic control devices to meet construction requirements for the safety of the traveling public when directed to do so by the Engineer, on any day, the sum of $1500.00 per day will be deducted from any money due the Contractor as a charge for failure to comply with this specification.

Method of Measurement: This work shall be measured for payment by the number of each system installed as shown on the plans, conforming to the details and specifications and as accepted by the Engineer.

Basis of Payment: The impact attenuation system will be paid for at the Contract unit price for each "Type B Impact Attenuation System (Tangential)" chosen from the Department's Qualified Products List. This price shall include all materials, excavation, transition section, reflective sheeting, site preparation, transportation, and removal of surplus material, equipment, tools and labor incidental to complete the installation.

Pay Item	Pay Unit
Type B Impact Attenuation System (Tangential)	Each

PERMITS AND/OR REQUIRED PROVISIONS:

The following Permits and/or Required Provisions follow this page and are hereby made part of this Contract.

- **PERMITS AND/OR PERMIT APPLICATIONS**

  No Permits are required for this contract

- **Construction Contracts - Required Contract Provisions (FHWA Funded Contracts)**

TABLE OF CONTENTS OF SPECIAL PROVISIONS

Note: This Table of Contents has been prepared for the convenience of those using this contract with the sole express purpose of locating quickly the information contained herein; and no claims shall arise due to omissions, additions, deletions, etc., as this Table of Contents shall not be considered part of the contract.

State of Connecticut

Department of Transportation

SUPPLEMENTAL SPECIFICATIONS

TO

THE STANDARD SPECIFICATIONS

FOR

ROADS, BRIDGES, FACILITIES

AND INCIDENTAL CONSTRUCTION

FORM 816

2004

JANUARY 2016

January 2016

DIVISION I
GENERAL REQUIREMENTS AND COVENANTS

SECTION		SPECIFICATION NUMBER
1.01	Definition of Terms and Permissible Abbreviations	101
1.02	Proposal Requirements and Conditions	102
1.03	Award and Execution of Contract	103
1.05	Control of the Work	105
1.06	Control of Materials	106
1.07	Legal Relations and Responsibilities	107
1.08	Prosecution and Progress	108
1.09	Measurement and Payment	109
1.10	Environmental Compliance	110
1.11	Claims	111
1.20	General Clauses for Facilities Construction	120

DIVISION II
CONSTRUCTION DETAILS

SECTION		SPECIFICATION NUMBER
2.02	Roadway Excavation, Formation of Embankment and Disposal of Surplus Material	202
2.05	Trench Excavation	205
2.11	Anti-Tracking Pad	211
2.12	Subbase	212
2.16	Pervious Structure Backfill	216
2.18	Sedimentation Control Bales	218
2.19	Sedimentation Control System	219
3.02	Rolled Granular Base	302
3.03	Concrete Base	303
3.04	Processed Aggregate Base	304
4.01	Concrete for Pavement	401
4.03	Cold Reclaimed Asphalt Pavement	403
4.06	Bituminous Concrete	406
4.14	Bituminous Surface Treatment	414
5.04	Railroad Protection	504
5.08	Shear Connectors	508
5.14	Prestressed Concrete Members	514
6.01	Concrete for Structures	601
6.03	Structural Steel	603
6.12	Concrete Cylinder Curing Box	612
6.51	Culverts	651
7.01	Drilled Shafts	701
7.02	Piles	702
7.06	Micropiles	706
7.16	Temporary Earth Retaining System	716
7.17	Earth Retaining System Left in Place	717
7.25	Bagged Stone	725
8.11	Concrete Curbing	811
8.13	Stone Curbing	813
8.22	Temporary Precast Concrete Barrier Curb	822
9.07	Barways	907
9.10	Metal Beam Rail	910
9.18	Three-Cable Guide Railing (I-Beam Post) and Anchorages	918
9.21	Concrete Sidewalks and Ramps	921
9.22	Bituminous Concrete Sidewalk Bituminous Concrete Driveway	922
9.41	Service Bridges	941
9.44	Topsoil	944
9.45	Wildflower Establishment	945

DIVISION II
CONSTRUCTION DETAILS

SECTION		SPECIFICATION NUMBER
9.49	Furnishing, Planting and Mulching Trees, Shrubs, Vines and Ground Cover Plants	949
9.50	Turf Establishment Erosion Control Matting	950
9.70	Trafficperson	970
9.73	Safety Patrol Service	973
9.75	Mobilization and Project Closeout	975
9.77	Traffic Cone	977
9.78	Traffic Drum	978
9.79	Construction Barricades	979
9.80	Construction Staking	980
9.81	42 Inch (1 Meter) Traffic Cone	981
10.00	General Clauses for Highway Illumination and Traffic Signal Projects	1000
10.01	Trenching and Backfilling	1001
10.10	Concrete Handhole	1010
11.13	Control Cable	1113
12.04	Sign Panel Overlay	1204
12.07	Sign Face – Extruded Aluminum	1207
12.08	Sign Face – Sheet Aluminum	1208
12.10	Epoxy Resin Pavement Markings	1210
12.20	Construction Signs	1220
18.00	General Clauses – Impact Attenuation Systems	1800
18.04	Type C and NC – Impact Attenuation Systems	1804
18.06	Type D Portable Impact Attenuation System	1806

January 2016

DIVISION III
MATERIALS SECTION

SECTION		SPECIFICATION NUMBER
M.03	Portland Cement Concrete	M03
M.04	Bituminous Concrete	M04
M.06	Metals	M06
M.08	Drainage	M08
M.11	Masonry Facing, Cement and Dry Rubble Masonry, Brick, Mortar	M11
M.13	Roadside Development	M13
M.16	Traffic Control Signals	M16
M.17	Elastomeric Materials	M17
M.18	Signing	M18

JANUARY 2016

STANDARD SPECIFICATIONS
FOR
ROADS, BRIDGES AND INCIDENTAL CONSTRUCTION
FORM 816

ERRATA

PG.	ARTICLE OR SUBARTICLE	LINE NO.	CORRECTION	REV. DATE
i	Table of Contents	20	Insert “1.11 Claims”	July10
ii	Table of Contents	2	Insert “2.11 Anti-Tracking Pad”	Jan16
ii	Table of Contents	7	Delete “2.18 Sedimentation Control Bales”	Jan16
ii	Table of Contents	9	Delete “3.02 Rolled Granular Base”	Jan16
ii	Table of Contents	10	Delete “3.03 Concrete Base”	Jan16
ii	Table of Contents	15	Delete “4.03 Cold Reclaimed Asphalt Pavement”	Jan16
ii	Table of Contents	17	Delete “4.14 Bituminous Surface Treatment”	Jan16
iii	Table of Contents	10	Insert “7.01 Drilled Shafts”	July14
iii	Table of Contents	15	Insert “7.06 Micropiles”	July14
iii	Table of Contents	20	Insert “7.16 Temporary Earth Retaining System”	Jan16
iii	Table of Contents	20	Insert “7.17 Earth Retaining System Left in Place”	Jan16
iii	Table of Contents	21	Delete “7.25 Bagged Stone”	Jan16
iii	Table of Contents	38	Delete “9.07 Barways”	Jan16
iv	Table of Contents	11	Change “Guild” to “Guide”	Jan05
iv	Table of Contents	13	Change “Concrete Sidewalks” to “Concrete Sidewalks and Ramps”	July15
iv	Table of Contents	21	Delete “9.41 Service Bridges”	Jan16
iv	Table of Contents	25	Delete “9.45 Wildflower Establishment”	Jan16
iv	Table of Contents	30	Change “Turf Establishment” to “Turf Establishment, Erosion Control Matting”	Jan16
iv	Table of Contents	36	Delete “9.73 Safety Patrol Service”	Jan16
v	Table of Contents	2	Change “Mobilization” to “Mobilization and Project Closeout”	July14
vi	Table of Contents	21	Change “Sign Face – Extruded Aluminum (Type III Reflective Sheeting)” to “Sign Face – Extruded Aluminum”	Jan15
vi	Table of Contents	25	Change “Epoxy Resin Pavement Markings, Symbols and Legends” to “Epoxy Resin Pavement Markings”	Jan16
vi	Table of Contents	33	Change “Construction Signs – Encapsulated Lens Type III Reflective Sheeting” to “Construction Signs”	Jan15
vii	Table of Contents	5	Delete “18.04 Type C and NC – Impact Attenuation Systems”	Jan16
164	2.04.03-1	2	Change “6.01.03-10” to “6.01.03-6”	Jan14
176	2.07.03	7	After the second sentence, add the following: “Acceptance of the material will be in accordance with Subarticle 2.02.03-6 for compaction.”	Jan16
203	3.05.05	21	Change “(t) to “(mton)”.....	Jan15
256	5.01.02	22	Change “DEP” to “DEEP”	Jan14
259	5.03.03	24	Change “Such requirements of Article 5.02.03 ... equally to this construction.” to “All such plans prepared by the Contractor shall be considered working drawings and shall be submitted	

PG.	ARTICLE OR SUBARTICLE	LINE NO.	CORRECTION	REV. DATE
			with engineering calculations to the Engineer for review in accordance with the requirements of Article 1.05.02.".....	July10
262	5.06.02	26	Change “Article M.03.01” to “Section M.03”.....	Jan14
262	5.06.02	27	Change “Article M.03.01” to “Section M.03”.....	Jan14
265	5.07.02	19	Change “Subarticle M.03.01-11” to “Article M.03.09”.....	Jan14
265	5.07.02	23	Change “Approved Products List for Geotextiles referred to in Subarticle M.08.01-26.” to “Qualified Products List referred to in Subarticle M.08.01-19 Geotextiles.”.....	July14
271	5.09.02	39	Change “M.06.02-12” to “M.06.02-4 Welded Stud Shear Connectors”.....	July10
272	5.13.02	22	Change “M.08.01-27” to “M.08.01-20 PVC Pipe or M.08.01-21 PVC Gravity Pipe”.....	July13
378	6.52.02	2	Change “M.08.01-22” to “M.08.01-11 Reinforced Concrete Culvert End”.....	July13
378	6.52.02	3	Change “M.08.01-23” to “M.08.01-6 Metal Culvert End”.....	July13
378	6.52.02	4	Change “gravel fill” to “granular fill”.....	Jan15
378	6.52.03	12	Change “gravel fill” to “granular fill”.....	Jan15
378	6.52.04	22	Change “gravel fill” to “granular fill”.....	Jan15
378	6.52.05	35	Change “gravel fill” to “granular fill”.....	Jan15
404	7.05.02	11	Change “Article M.03.01” to “Section M.03”.....	Jan14
414	7.28.05	4	Change “(t) to “(mton)”.....	Jan15
416	7.51.02-(4)	7	Change “M.08.01-26” to “M.08.01-19 Geotextiles”.....	July13
418	7.55.02	26	Change “M.08.01-26” to “M.08.01-19 Geotextiles”.....	July13
419	8.03.02	32	Change “Class 3” to “Curb Mix”.....	Jan16
419	8.03.03	37	Delete “3.02.03”.....	Jan16
425	8.15.02	17	Change “Class 3” to “Curb Mix”.....	Jan16
426	8.16.02	28	Change “Subarticle M.03.01-8” to “Article M.03.08”.....	Jan14
428	8.18.02	10	Change “Subarticle M.03.01-11” to “Article M.03.09”.....	Jan14
429	8.21.02-6	30	Change “M.03.01-11” to “Article M.03.09”.....	Jan14
430	8.21.03-6	37	Change “M.03.01-11” to “Article M.03.09”.....	Jan14
434	9.04.02	14	Change “Subarticle M.06.02-1” to “Article 6.03.02”.....	July10
434	9.04.02	15	Change “M.06.02-9(d) for metal bridge rail (cast post—aluminum)” to “Malleable castings shall conform to the requirements of the specifications for malleable iron castings, ASTM A 47, Grade No. 32510 (22010). Ductile iron castings shall conform to the Specifications for Ductile Iron Castings, ASTM A 536, Grade 60-40-18 (414-276-18) unless otherwise specified. In addition to the specified test coupons, test specimens from parts integral with the castings, such as risers, shall be tested for castings having a weight (mass) of more than 1000 pounds (455 kilograms) to determine that the required quality is obtained in the castings in the finished condition.”.....	July10
445	9.11.02	14	Change “Subarticle M.03.01-12” to “Article M.03.05”.....	Jan14
452	9.14.02	2	Change “Subarticle M.06.02-8” to “ASTM A 53, Type E or S, Grade A, Schedule 40 Black Finish.”.....	July10

PG.	ARTICLE OR SUBARTICLE	LINE NO.	CORRECTION	REV. DATE
452	9.14.02	4	Change “Subarticle M.06.02-9(d) except that the grade shall be 32510” to “the specifications for malleable iron castings, ASTM A 47, Grade No. 32510 (22010). Ductile iron castings shall conform to the Specifications for Ductile Iron Castings, ASTM A 536, Grade 60-40-18 (414-276-18) unless otherwise specified. In addition to the specified test coupons, test specimens from parts integral with the castings, such as risers, shall be tested for castings having a weight (mass) of more than 1000 lb. (455 kg) to determine that the required quality is obtained in the castings in the finished condition.”.....	July10
454	9.16.02	20	Change “Article M.03.01” to “Section M.03”.....	Jan14
461	9.22.02	30	Change “Class 2” to “lift thickness 1.25 or more = HMA S0.375”.....	Jan16
464	9.23.05	9	Change “ton (t)” to “ton (mton)”.....	Jan15
464	9.24.02-1	19	Change “Article M.03.01” to “Section M.03”.....	Jan14
465	9.25.02	29	Change “Class 3” to “Curb Mix”……..	Jan16
465	9.25.03	38	Delete “except that the following subarticles shall not apply: 1-Samples, 7-Paving Equipment, 8-Placing of Mixture,9-Compaction, 10-Surface Test of Pavement and 11-Joints.”..	Jan16
467	9.30.02	36	Change “reflective” to “retroreflective”.....	July15
467	9.30.02	39	Change “reflective” to “retroreflective”.....	July15
471	9.42.05	9	Change “(t)” to “(mton)”.....	Jan15
475	9.46.05	2	Change “(t)” to “(mton)”.....	Jan15
475	9.47.02-5	34	Change “Article M.03.01” to “Section M.03”.....	Jan14
517	10.00	21	Add “10.00.14—Maintenance of Illumination During Construction”.....	July14
518	10.00.03(2)	41	Change “pre-emotion” to “pre-emption”.....	July14
519	10.00.04	12	Capitalize “Section”.....	July14
519	10.00.04	18	Capitalize “Project”.....	July14
530	10.01.02	23	Change “Class 2” to “HMAS0.375 - for lift thickness 1.25 in or more”.....	Jan16
533	10.02.02	6	Change “Article M.03.01” to “Section M.03”.....	Jan14
533	10.02.02	7	Change “Class 2 Bituminous Concrete” to “HMAS0.375 – For lift thickness 1.25 in or more”…….....	Jan16
544	10.11.02	5	Change “M.08.01-25 or M.08.01-27” to “M.08.01-20 or M.08.01-21”.....	July13
548	10.17.03	14	Change “6.01.03-21” to “6.01.03-10”.....	Jan14
552	11.03.03-1	18	Change “M.03.01-12” to “M.03.05”.....	Jan14
561	11.11.03-2	23	Change “Class 1” to “HMAS0.5”.....	Jan16
566	11.13.03-2	29	Replace “MIL” with “MILSPEC”.....	July06
569	11.14.05	19	Change “Span Wire” to “Span Wire (Type)”.....	July12
576	12.01.02	40	Change “Subarticle M.03.01-12” to “Article M.03.05”.....	Jan14
577	12.01.03	7	Change “6.03.03-19” to “6.03.03-4 (f) High Strength Bolted Connections”.....	July10
577	12.01.03	23	Change “Article 6.03.03-15” to “Subarticle 6.03.03-4(c) Bearings”.....	July10

PG.	ARTICLE OR SUBARTICLE	LINE NO.	CORRECTION	REV. DATE
577	12.01.03	27	Change “Article 6.03.03-19 (c)(3)” to “Subarticle 6.03.03-4(f) High Strength Bolted Connections Turn-of-Nut Installation Method”.....	July10
578	12.02.02	23	Change “M.03.01-12” to “M.03.05”.....	Jan14
580	12.02.03	16	Change “6.01.03-21” to “6.01.03-10”.....	Jan14
583	12.05.01	10	Change “reflective” to “retroreflective”.....	July15
583	12.05.02	15	Change “Reflective” to “Retroreflective”.....	July15
583	12.05.02	16	Change “either Subarticle M.18.09.01 (Type V) or M.18.09.02” to “Article M.18.09”.....	Jan15
583	12.05.03	28	Change “reflective” to “retroreflective”.....	July15
583	12.05.04	35	Change “12.05.040” to “12.05.04”.....	July14
585	12.06.03	12	Change “9.45” to “9.50”.....	Jan16
598	12.12.02	1	Change “reflective” to “retroreflective”.....	July15
601	12.16.05	13	Change “100 pounds” to “10 pounds”.....	Jan16
601	12.16.05	17	Change “50 pounds” to “5 pounds”.....	Jan16
604	18.02.02	36	Change “Approved Products List” to “Qualified Products List”.....	July14
609	18.07.02	30	Change “M18” to “M.18”.....	July14
705	M.09.02-2	18	Change “Article M.09.02(1)” to “Subarticle M.09.02-1”.....	July14
708	M.09.02-5	5	Change “Article M.03.01” to “Section M.03”.....	Jan14
708	M.09.02-6	40	Change “Article M.03.01-2” to “Subarticle M.03.01-2”.....	July14
711	M.10.02-1	17	Change “Subarticle M.06.02-1(b)” to “Article M.06.02”.....	July10
713	M.10.02-7	8	Change “Article M.03.01” to “Section M.03”.....	Jan14
720	M.10.08-3	2	Change “Subarticle M.06.02-1(b)” to “Article M.06.02”.....	July10
720	M.10.08-4	10	Change “Article M.03.01” to “Section M.03”.....	Jan14
726	M.12.03	18	After “M.03.01” add “and M.03.02”.....	Jan14
731	M.12.08-3	20	Change “Article M.06.01-1” to “Subarticle M.06.01-1”.....	July14
748	M.14.01-3	42	Change “Article M.06.01-1” to “Subarticle M.06.01-1”.....	July14
749	M.14.01-4	2	Change “Article M.08.01-5” to “Subarticle M.08.01-5”.....	July14
749	M.14.01-7	22	Change “Article M.14.01-2” to “Subarticle M.14.01-2”.....	July14
749	M.14.01-8	32	Change “Article M.03.01-12” to “Article M.03.05”.....	Jan14
758	M.15.10	9	Change “Article M.15.09-1” to “Subarticle M.15.09-1”.....	July14
759	M.15.15-4	23	Change “Article M.16.03.2” to “Subarticle M.16.03-2”.....	July14
759	M.15.15-5	26	Change Article M.15.02.2” to “Subarticle M.15.02-2”.....	July14
759	M.15.15-5	24	Change “Article M.03.01” to “Section M.03”.....	Jan14
759	M.15.15-6	27	Change “Article M.03.01” to “Section M.03”.....	Jan14
760	M.15.15-16	21	Change “non-fusible” to “fused”.....	Jan05
821	Pay Items	22	Delete “4.06”.....	Jan16
822	Pay Items	44	Add “2.11, Anti-Tracking Pad, s.y. (s.m)”.....	Jan16
823	Pay Items	8	Delete “2.18, Sedimentation Control Bales, l.f. (m)”.....	Jan16
823	Pay Items	12	Delete “3.02, Rolled Granular Base, c.y. (cu.m)”.....	Jan16
823	Pay Items	14	Delete “3.03, Concrete for Base, c.y. (cu.m)”.....	Jan16
823	Pay Items	15	Delete “3.03”.....	Jan16
823	Pay Items	18	Delete “3.03”.....	Jan16
823	Pay Items	20	Delete “3.03”.....	Jan16
823	Pay Items	22	Delete “3.03”.....	Jan16

PG.	ARTICLE OR SUBARTICLE	LINE NO.	CORRECTION	REV. DATE
823	Pay Items	24	Delete “3.03”	Jan16
823	Pay Items	28	Change “ton (t)” to “ton (mton)”	Jan15
823	Pay Items	29	Change “ton (t)” to “ton (mton)”	Jan15
823	Pay Items	32	Delete “4.03, Cold Reclaimed Asphalt Pavement, s.y. (s.m.)”	Jan16
823	Pay Items	35	Delete “4.03, Additional Aggregate, ton (t)”	Jan16
823	Pay Items	39	Change “ton (t) “ to “c.y. (cu.m)”	Jan16
823	Pay Items	41	Change “ton (t)” to “ton (mton)”	Jan16
823	Pay Items	50	Change “ton (t)” to “ton (mton)”	Jan16
824	Pay Items	3	Change “Bituminous Concrete, Class ( ), ton (t)” to “HMA S*, ton”	Jan16
824	Pay Items	5	Change “Sawing and Sealing Joints, l.f. (m)” to PMA S*, ton”	Jan16
824	Pay Items	7	Change “Cleaning and Sealing Joints and Cracks, lb. (kg)” to “Bituminous Concrete Adjustment Cost, est.”	Jan16
824	Pay Items	12	Change “Cutting and Sealing Joint in the Bituminous Concrete Shoulder, l.f. (m)” to “Material Transfer Vehicle, ton”	Jan16
824	Pay Items	16	Delete “4.06, Kerf Cut in Bituminous Concrete Pavement, l.f. (m)”	Jan16
824	Pay Items	19	Delete “4.14, Bituminous Material for Surface Treatment, gal. (L)”	Jan16
824	Pay Items	22	Delete “4.14, Sand Cover for Bituminous Surface Treatment, s.y. (s.m)”	Jan16
824	Pay Items	30	Change “hr. (hr.)”to “”est. (est.)”	Jan16
825	Pay Items	25	Change “l.s. (l.s.)” to “ea. (ea.)”	Jan15
827	Pay Items	3	Delete “6.03, Structural Steel (Low Alloy), cwt. (kg)”	Jan16
827	Pay Items	5	Delete “6.03, Wrought Iron, lb. (kg)”	Jan16
827	Pay Items	7	Delete “6.03, Structural Steel Sign Support, cwt. (kg)”	Jan16
828	Pay Items	29	Add “7.01, Furnishing Drilled Shaft Drilling Equipment, l.s. (l.s.)”	July14
828	Pay Items	30	Add “7.01, Drilled Shaft (Diameter), l.f. (m)	July14
828	Pay Items	31	Add “7.01, Drilled Shaft Earth Excavation (Diameter), l.f. (m)”	July14
828	Pay Items	32	Add “7.01, Drilled Shaft Rock Excavation (Diameter), l.f. (m)”	July14
828	Pay Items	33	Add “7.01, Obstructions, hr. (hr.)”	July14
828	Pay Items	34	Add “7.01, Trial Drilled Shaft (Diameter), l.f. (m)”	July14
828	Pay Items	35	Add “7.01, Exploration Test Boring, l.f. (m)”	July14
828	Pay Items	36	Add “7.01, Permanent Casing (Diameter), l.f. (m)”	July14
828	Pay Items	37	Add “7.01, Access Tubes, l.f. (m)”	July14
829	Pay Items	4	Add “7.02, Dynamic Pile Driving Analysis (PDA) Test, ea. (ea.)”	July13
829	Pay Items	5	Add “7.02, Pre-Augering of Piles, l.f. (m)”	July13
829	Pay Items	13	Add “7.06, Micropiles, ea. (ea.)”	July14
829	Pay Items	14	Add “7.06, Verification Test for Micropiles, ea. (ea.)”	July14
829	Pay Items	15	Add “7.06, Proof Test for Micropiles, ea. (ea.)”	July14

PG.	ARTICLE OR SUBARTICLE	LINE NO.	CORRECTION	REV. DATE
829	Pay Items	16	Add “7.06, Micropile Length Adjustment, l.f. (m)”	July14
829	Pay Items	22	Add “7.16, Temporary Earth Retaining System, s.f. (s.m)”	Jan16
829	Pay Items	23	Add “7.17, Earth Retaining System Left in Place, s.f. (s.m)”	Jan16
829	Pay Items	23	Delete “7.25, Bagged Stone, c.f. (bag)”	Jan16
829	Pay Items	24	Change “ton (t)” to “ton (mton)”	Jan15
829	Pay Items	36	Change “ton (t)” to “ton (mton)”	Jan16
831	Pay Items	24	Delete “9.07, Barways, ea. (ea.)”	Jan16
833	Pay Items	14	Add “9.21, Concrete Sidewalk Ramp, s.f. (s.m)”	Jan16
833	Pay Items	15	Add “9.21, Detectable Warning Strip, ea. (ea.)”	Jan16
833	Pay Items	16	Add “9.21, Retrofit Detectable Warning Strip, ea. (ea.)”	Jan16
833	Pay Items	26	Change “ton (t)” to “ton (mton)”	Jan15
833	Pay Items	28	Delete “9.41, Service Bridge, ea. (ea.)”	Jan16
833	Pay Items	42	Change “ton (t)” to “ton (mton)”	Jan16
834	Pay Items	3	Delete “9.45, (Wildflower Name), lb. (kg)”	Jan16
834	Pay Items	4	Change “ton (t)” to “ton (mton)”	Jan15
834	Pay Items	21	Change “Erosion Control Matting” to “Erosion Control Matting (Type)”	Jan16
834	Pay Items	27	Change “Trafficperson” to “Trafficperson Municipal Police Officer)”	Jan16
834	Pay Items	27	Add “9.70, Trafficperson (Uniformed Flagger), hr. (hr.)”	Jan16
834	Pay Items	30	Delete “9.73, Safety Patrol Service, hr. (hr.)”	Jan16
835	Pay Items	3	Change “Mobilization” to “Mobilization and Project Closeout”	July14
837	Pay Items	24	Change “Span Wire” to “Span Wire (Type)”	July12
839	Pay Items	3	Change “Sign Face – Extruded Aluminum (Type III Reflective Sheeting)” to “Sign Face – Extruded Aluminum”	Jan15
840	Pay Items	6	Change “Construction Signs – Type III Reflective Sheeting” to “Construction Signs”	Jan15
840	Pay Items	12	Delete “18.04, Type NC Impact Attenuation System, ea. (ea.)”	Jan16
845	Index	6	Add page 133 to “Acceptance of Project”	Jan05
846	Index	13	Add page 107 to “Bids: Consideration of”	Jan05
847	Index	28	Add page 132 to “Cleaning Up, Final”	Jan05
849	Index	25	Add page 107 to “Consideration of Bids”	Jan05
849	Index	39	Add page 108 to “Contract: Intent of”	Jan05
850	Index	3	Add page 133 to “Contractor’s: Responsibility, Termination of the”	Jan05
850	Index	13	Add page 114 to “Cooperation by Contractor”	Jan05
850	Index	15	Add page 114 to “Coordination of Special Provisions, Plans, Supplemental Specifications and Standard Specifications and Other Contract Requirements”	Jan05
850	Index	40	Add page 128 to “Cutting and Patching:”	Jan05
852	Index	16	Add page 106 to “Examination of Plans, Specifications, Special Provisions and Site of Work”	Jan05
852	Index	38	Insert “Facilities, Temporary…126”	Jan05
853	Index	7	Add page 132 to “Final: Cleaning Up”	Jan05

PG.	ARTICLE OR SUBARTICLE	LINE NO.	CORRECTION	REV. DATE
854	Index	35	Add page 115 to “Inspection”.....	Jan05
855	Index	11	Add page 108 to “Intent of Contract”.....	Jan05
855	Index	22	Add page 106 to “Knowledge of Applicable Laws”.....	Jan05
855	Index	25	Add page 106 to “Laws: Knowledge of Applicable”.....	Jan05
856	Index	27	Add page 120 to “Materials: Source of Supply and Quality”....	Jan05
856	Index	28	Add page 121 to “Materials: Storage of”.....	Jan05
857	Index	33	Add page 133 to “Operation and Maintenance Manuals:”.....	Jan05
857	Index	34	Change page 133 to 136 for “Equipment and Systems Maintenance Manual”.....	Jan05
859	Index	2	Add page 131 to “Personnel and Equipment”.....	Jan05
860	Index	6	Add page 114 to “Plans: Coordination of Special Provisions, Supplemental Specifications and Standard Specifications and Other Contract Requirements”.....	Jan05
860	Index	7	Add page 106 to “Plans: Examination of”.....	Jan05
860	Index	30	Change page 108 to 112 for “Product Data”.....	Jan05
860	Index	31	Change page 108 to 112 for “Product Samples”.....	Jan05
860	Index	32	Add page 124 to “Product Selection:”.....	Jan05
861	Index	12	Add page 126 to “Prosecution of Work”.....	Jan05
861	Index	38	Change page 115 to 135 for “Record Drawings”.....	Jan05
863	Index	3	Add page 125 to “Sanitary Provisions”.....	Jan05
863	Index	18	Insert “Services, Temporary…126”.....	Jan05
863	Index	23	Add page 111 to “Shop Drawings”.....	Jan05
864	Index	4	Add page 106 to “Site of Work, Examination of”.....	Jan05
864	Index	12	Add page 120 to “Source of Supply and Quality”.....	Jan05
864	Index	19	Add page 114 to “Special Provisions: Coordination of Plans, Supplemental Specifications and Standard Specifications and Other Contract Requirements”.....	Jan05
864	Index	20	Add page 106 to “Special Provisions: Examination of”.....	Jan05
864	Index	26	Add page 114 to “Specifications: Coordination of Plans, Special Provisions and Other Contract Requirements”.....	Jan05
864	Index	27	Add page 106 to “Specifications: Examination of”.....	Jan05
864	Index	43	Add page 121 to “Storage”.....	Jan05
865	Index	27	Delete page 108 from “Submittals: Shop Drawings”.....	Jan05
865	Index	45	Insert “Temporary Utilities, Services, and Facilities…126”.....	Jan05
866	Index	2	Add page 133 to “Termination of Contractor’s Responsibility”.....	Jan05
866	Index	23	Insert “Training…137”.....	Jan05
866	Index	45	Add page 133 to “Utility Services”.....	Jan05
867	Index	8	Insert “Warranties…121”.....	Jan05
867	Index	24	Add page 126 to “Work: Prosecution of”.....	Jan05

CONNECTICUT
SUPPLEMENTAL SPECIFICATION
SECTION 1.01
DEFINITIONS OF TERMS AND PERMISSIBLE ABBREVIATIONS

1.01.01 — Definitions:

After the first sentence, add the following:

"Where appropriate, words in the singular form shall be deemed to include the plural, and words in the plural form to include the singular."

After the definition for "Award" *add the following definition:*

"**BID**: The submission of a proposal for the work contemplated."

After the definition of "Bid Advertisement" add the following definition:

"**BIDDER**: Any individual, firm, partnership, corporation, or combination thereof, submitting a proposal for the work contemplated, acting directly or through a duly authorized representative."

After the definition for "Calendar Day" *add the following definition:*

"**CATALOG CUT (PRODUCT DATA):** Document(s) with information such as manufacturer's product specifications, manufacturer's installation instructions, standard color charts, wiring diagrams showing factory-installed wiring, printed performance curves and operational range diagrams. Product data that must be specially prepared because standard printed data is not suitable shall be considered shop drawings."

After the definition for "Commissioner" *add the following definitions:*

"CONNECTICUT GUIDELINES FOR SOIL EROSION AND SEDIMENT CONTROL: This DEEP Bulletin is intended to provide information to government agencies and the public on soil erosion and sediment control.
http://www.ct.gov/deep/cwp/view.asp?a=2720&q=325660&deepNav_GID=1654%20
CONNECTICUT STORMWATER QUALITY MANUAL: This DEEP publication provides guidance on measures necessary to protect waters of the State from adverse impacts of post-construction stormwater runoff.
http://www.ct.gov/deep/cwp/view.asp?a=2721&q=325704&depNav_GID=1654%20-%20download "

Change the title of "**CONSTRUCTION ORDER**" *to* "**CONSTRUCTION ORDER, CHANGE ORDER**."

In the definition for "**CONTRACT**" *change* "the Department's "Standard Specifications for Roads, Bridges and Incidental Construction" *to* "the Department's Standard Specifications for Roads, Bridges, Facilities and Incidental Construction."

After the definition for "Contractor" *add the following definition:*

"CULVERT: A covered channel or a large pipe for carrying a watercourse below ground level, usually under a road or railway."

After the definition for "Laboratory" *add the following definition:*

"LIQUIDATED DAMAGES: The amount prescribed in the Contract specifications, to be paid to the State or to be deducted from any payments due or to become due the Contractor, for each day's delay in completing the whole or any specified portion of the work beyond the time allowed in the Contract specifications."

After the definition for "Material" *add the following definitions:*

"MUNICIPALITY: City, town or county.
NOTICE TO PROCEED: A written notice issued by the Engineer to the Contractor stating the date on which the Contractor is authorized to commence and proceed with the Contract work."

After the end of the definition for "Plans" *insert the following:*

"A. Standard Sheets – Standardized plans containing details approved by the Department and the FHWA, for construction of a given type on any project, included in contracts on an as-needed basis.

PRODUCT DATA (CATALOG CUT): Document(s) with information such as manufacturer's product specifications, manufacturer's installation instructions, standard color charts, wiring diagrams showing factory-installed wiring, printed performance curves and operational range diagrams Product data that must be specially prepared because standard printed data is not suitable shall be considered shop drawings."

After the definition for "Project Site" *add the following definition:*

"QUALIFIED PRODUCTS LIST (QPL): A report that has been developed as a means for determining what products, suppliers, manufacturers, equipment and methodologies may be used on construction projects. This report can be located on the CT Department of Transportation Website:
http://www.ct.gov/dot/cwp/view.asp?a=1387&q=259630 "

After the definition for "Reclaimed Waste" *add the following definition:*

"RIGHT-OF-WAY: A general term denoting land, property of interest therein, usually in a strip, acquired for or devoted to transportation purposes."

After the definition for “Subcontractor” a*dd the following definition:*

“**SUBSTANTIAL COMPLETION:** The date at which the performance of all work on the Project has been completed except minor or incidental items, final cleanup, work required under a warranty, and repair of unacceptable work, and provided the Engineer has determined that:

A. The Project is safe and convenient for use by the public, and
B. All traffic lanes including all safety appurtenances are in their final configuration, and
C. Failure to complete the work and repairs excepted above does not result in the deterioration of other completed work; and provided further, that the value of work remaining to be performed, repairs, and cleanup is less than one percent (1%) of the estimated final Contract amount, and
D. If applicable a Certificate of Compliance has been issued.”

1.01.02 — Abbreviations, Publications, and Standards:

Delete the entire Article and replace it with the following:

“ **1.01.02—Abbreviations, Publications and Standards:** Whenever one of the following abbreviations is used in the Contract, its meaning shall be interpreted as follows:

AA—(The) Aluminum Association, Inc.
AABC—Associated Air Balance Council
AAMA—American Architectural Manufacturers Association
AAPA—American Association of Port Authorities
AASHTO—American Association of State Highway and Transportation Officials: Wherever reference is made to an AASHTO Standard Method of Test or Standard Specification, it refers by letter and number to the method or specification published by AASHTO in the "Standard Specifications for Transportation Materials and Methods of Sampling and Testing". The edition governing the work shall be in effect on the date the Contract was advertised for solicitation of bids shall govern.
ABMA—American Bearing Manufacturers Association
ACGIH—American Council of Government Industrial Hygienists
ACI—ACI International (American Concrete Institute)
ACOE—Army Corps of Engineers
ADAAG—Americans with Disabilities Act (ADA) Accessibility Guidelines for Buildings and Facilities
ADSC—The International Association of Foundation Drilling (formerly Association of Drilled Shaft Contractors)
AF&PA—American Forest & Paper Association
AGA—American Gas Association
AGC—(The) Associated General Contractors of America
AHA—American Hardboard Association
AHAM—Association of Home Appliance Manufacturers
AI—Asphalt Institute
AIA—(The) American Institute of Architects
AISC—American Institute of Steel Construction
AISI—American Iron and Steel Institute

AITC—American Institute of Timber Construction
A.L.I.—Automotive Lift Institute
ALSC—American Lumber Standard Committee, Incorporated
AMCA—Air Movement and Control Association International, Inc.
AMRL—AASHTO Materials Reference Library
ANLA—American Nursery and Landscape Association
ANSI—American National Standards Institute
AOAC—AOAC International
AOSA—Association of Official Seed Analysts
APA—APA-The Engineered Wood Association
API—American Petroleum Institute
AREMA—American Railway Engineering and Maintenance-of-Way Association
ARI—Air-Conditioning & Refrigeration Institute
ARTBA—American Road and Transportation Builders Association
ASA—Acoustical Society of America
ASC—Adhesive and Sealant Council
ASCE—American Society of Civil Engineers
ASHRAE—American Society of Heating, Refrigerating and Air-Conditioning Engineers
ASME—ASME International (The American Society of Mechanical Engineers International)
ASNT—American Society for Non-Destructive Testing
ASSE—American Society of Sanitary Engineering
ASTM—American Society of Testing and Materials (ASTM International): Wherever reference is made to an ASTM specification, test method, or practice, it refers by letter, number, or both to standards published by ASTM International in the "ASTM Standards Source™ Database". The edition governing the work shall be in effect on the date the Contract was advertised for solicitation of bids shall govern.
ATSSA—American Traffic Safety Services Association
AWI—Architectural Woodwork Institute
AWPA—American Wood-Preservers' Association
AWPI—American Wood Preservers Institute
AWS—American Welding Society: Wherever reference is made to an AWS materials specification, inspection methods, or welding procedures, it refers by section number to standards of the American Welding Society published in the applicable steel, or aluminum welding code. The edition governing the work shall be in effect on the date the Contract was advertised for solicitation of bids shall govern.
AWWA—American Water Works Association
BHMA—Builders Hardware Manufacturers Association
BIA—(The) Brick Industry Association
BOCA—BOCA International, Inc.
CBM—Certified Ballast Manufacturers Association
CCRL—Cement and Concrete Reference Laboratory
CDA—Copper Development Association (The)
CFR—Code of Federal Regulations
CGA—Compressed Gas Association
CGS—Connecticut General Statutes (as revised)
CISCA—Ceilings and Interior Systems Construction Association
CISPI—Cast Iron Soil Pipe Institute CISPI—Cast Iron Soil Pipe Institute
CLFMI—Chain Link Fence Manufacturers Institute
ConnDOT—Connecticut Department of Transportation

CRI—(The) Carpet and Rug Institute
CRSI—Concrete Reinforcing Steel Institute
CSI—(The) Construction Specifications Institute
CSSB—Cedar Shake & Shingle Bureau
CTI—Cooling Technology Institute
DASMA—Door and Access Systems Manufacturers Association, International
~~DEP—Connecticut Department of Environmental Protection~~ *see DEEP*
DEEP—Connecticut Department of Energy and Environmental Protection
DHI—Door and Hardware Institute
DOD—Department of Defense Military Specifications and Standards
~~DPUC—Department of Public Utility Control~~ *see PURA*
EIA—Electronic Industries Alliance
EPA—Environmental Protection Agency
FAA—Federal Aviation Administration
FCC—Federal Communications Commission
FCICA—Floor Covering Installation Contractors Association
FHWA—Federal Highway Administration
FMG—FM Global
FRA—Federal Railway Administration
FS—Wherever reference is made to FS in the contract, it refers by number, letter, or both, to the latest standard or tentative standard of the Federal Specification Unit, General Services Administration, Federal Supply Service, as to materials, specifications, or methods of testing, whichever the case may be.
FTA—Federal Transit Administration
GA—Gypsum Association
GANA—Glass Association of North America
GSA—General Services Administration
HI—Hydraulics Institute
HPVA—Hardwood Plywood & Veneer Association
ICC—International Code Council
ICC-ES—ICC Evaluation Service, Inc.
ICEA—Insulated Cable Engineers Association, Inc.
IEC—International Electrotechnical Commission
IEEE—(The) Institute of Electrical and Electronics Engineers, Inc.
IES—Illuminating Engineers Society
IESNA—Illuminating Engineering Society of North America
IGCC—Insulating Glass Certification Council
IGMA—Insulating Glass Manufacturers Alliance
IMSA—International Municipal Signal Association
IRI—HSB Industrial Risk Insurers
ISO—International Organization for Standardization
ITE—Institute of Traffic Engineers
IUPAT—International Union of Painters and Allied Trades
IWRD—Inland Wetlands Resource Division
KCMA—Kitchen Cabinet Manufacturers Association
LMA—Laminating Materials Association
LPI—Lightning Protection Institute
MASH—Manual for Assessing Safety Hardware
MBMA—Metal Building Manufacturers Association
MILSPEC—Military Specification and Standards

MMA—Monorail Manufacturers Association
MSHA—Mine Safety and Health Administration
MSS—Manufacturers Standardization Society of The Valve and Fittings Industry, Inc.
MUTCD—Manual on Uniform Traffic Control Devices
NAAMM—National Association of Architectural Metal Manufacturers
NACE—National Association of Corrosion Engineers
NADCA—National Air Duct Cleaners Association
NAIMA—(The) North American Insulation Manufacturers Association (The)
NBFU—National Board of Fire Underwriters
NCHRP—National Cooperative Highway Research Program
NCMA—National Concrete Masonry Association
NCPI—National Clay Pipe Institute
NEAUPG—NorthEast Asphalt User/Producer Group
NEBB—Natural Environmental Balancing Bureau
NEC—National Electrical Code
NECA—National Electrical Contractors Association
NEMA—National Electrical Manufacturers Association
NEPCOAT—North East Protective Coatings Committee
NESC—National Electrical Safety Code
NETA—InterNational Testing Association
NETTCP—NorthEast Transportation Technician Certification Program
NFPA—National Fire Protection Association
NFRC—National Fenestration Rating Council
NHLA—National Hardwood Lumber Association
NICET—National Institute for Certification in Engineering Technologies
NIOSH—National Institute of Occupational Safety and Health
NIST—National Institute of Standards and Technology
NLGA—National Lumber Grades Authority
NOAA—National Oceanic and Atmospheric Administration
NRCA—National Roofing Contractors Association
NRMCA—National Ready-Mixed Concrete Association
NSC—National Safety Council
NSF-NSF International
NTMA—National Terrazzo and Mosaic Association, Inc.
OEO—Office of Equal Opportunity
OLISP—Office of Long Island Sound Programs
OSHA—Occupational Safety and Health Administration
PCA—Portland Cement Association
PCI—Precast/Prestressed Concrete Institute
PDI—Plumbing & Drainage Institute
PTI—Post-Tensioning Institute
PURA—Public Utilities Regulatory Authority
RFCI—Resilient Floor Covering Institute
RMA—Rubber Manufacturers Association
SAE—SAE International (formerly Society of Automotive Engineers)
SDI—Steel Deck Institute *or*
.....—Steel Door Institute
SFPA—Southern Forest Products Association
SHRP—Strategic Highway Research Program
SJI—Steel Joist Institute

SMACNA—Sheet Metal and Air Conditioning Contractors National Association
SPIB—(The) Southern Pine Inspection Bureau
SPRI—Single Ply Roofing Institute
SSPC—Where reference is made to SSPC in the Contract, it refers by number, letter, or both, to the latest standard or tentative standard specification of The Society for Protective Coatings, formerly the Steel Structures Painting Council, as to materials specifications, methods of testing, systems, procedures, inspection or other specification pertaining to any or all phases of cleaning or painting, whichever may apply.
SWRI—Sealant, Waterproofing, & Restoration Institute
TCA—Tile Council of America, Inc.
TIA—Telecommunications Industry Association
TIA/EIA—Telecommunications Industry Association/Electronics Industries Alliance
TPI—Truss Plate Institute, Inc.
TRB—Transportation Research Board
UFAS—Uniform Federal Accessibility Standards
UL—Underwriters Laboratories Inc.
USCG—United States Coast Guard
USDA—United States Department of Agriculture
USGBC—U.S. Green Building Council
USSWG—United States Steel Wire Gauge
WCLIB—West Coast Lumber Inspection Bureau
WCSC—Window Covering Safety Council
WDMA—Window & Door Manufacturers Association
WWPA—Western Wood Products Association”

1.01.03 — Abbreviations and Terms:

Revise the first two sentences as follows:

“ Abbreviations and terms used in the Contract are in lieu of and are to be construed in the same way as are the terms or phrases following them in the list below. Those abbreviations and terms include, but are not limited to:”

Add the following abbreviations:

ACSR—Aluminum Conductor, Steel Reinforced
AIC—Ampere Interrupting Current
AOEC—Area of Environmental Concern
APA—Aquifer Protection Area
AWG—American Wire Gauge
CAS—Coating Applicator Specialist
cu.dm—Cubic Decimeter
cu.m—Cubic Meters
CWI—Certified Welding Inspector
dm^3—Cubic Decimeter
DMT—Division of Materials Testing
DTI—Direct Tension Indicator
est.— estimated

FRC—Fiberglass Reinforced Composite
Gsa—Apparent specific gravity
Gsb—Bulk specific gravity
HASP—Health and Safety Plan
m^2—Square Meter
m^3—Cubic Meters
MSDS—Material Safety Data Sheet(s)
mton—Metric Ton
N.C.—National Coarse
NDT—non-destructive testing
PCC—Portland Cement Concrete
Pwa—Percent water absorbed
sq.m—Square Meter
SSA—Sole Source Aquifer
TDC—Transportation Division Chief
TL—Test Level
TMA—Truck Mounted Impact Attenuator
TMP—Transportation Management Plan
TTC—Temporary Traffic Control
VAC—Volts Alternating Current
VECP—Value Engineering Change Proposal
Vert. M—Vertical Meter
vert.m—Vertical Meter
VMS—Variable Message Sign
VOC—Volatile Organic Compound
WSA—Temporary Waste Stockpile Area

CONNECTICUT
SUPPLEMENTAL SPECIFICATION
SECTION 1.02
PROPOSAL REQUIREMENTS AND CONDITIONS

In the list of articles, make the following changes:

"1.02.02—Vacant
1.02.05—Vacant
1.02.06—Vacant
1.02.07—Vacant
1.02.08—Vacant
1.02.09—Vacant
1.02.10—Vacant
1.02.11—Vacant
1.02.14—Vacant
1.02.15—Vacant"

1.02.01 – Contract Bidding and Award:

Replace the entire article with the following:

"**1.02.01—Contract Bidding and Award:** All bids for construction contracts must be submitted electronically. It is the responsibility of each bidder and all other interested parties to obtain all bidding related information and documents from the Department of Administrative Services (DAS) State Contracting Portal.

Connecticut Department of Transportation bidding and other information and documents which are obtained from any other source must not be submitted to the Department. Reproduced, reformatted or altered forms of documents are not authorized or acceptable.

For information about the bidding and award of Department construction contracts, consult the "State of Connecticut Department of Transportation Construction Contract Bidding and Award Manual," available from the Division of Contracts and at the following link: http://www.ct.gov/dot/cwp/view.asp?a=2288&q=259258. In order to be eligible for award of a Department construction contract, a bidder must follow the requirements of this Bid Manual, and all bidding and award matters regarding Department construction contracts shall be governed by the terms of the Bid Manual, unless treated otherwise in the Contract, including these Specifications."

Replace "**1.02.02—Competence of Bidder:** See Article 1.02.01." *with* "**1.02.02—Vacant**"

Replace "**1.02.05—Preparation of Proposals:** See Article 1.02.01." *with* "**1.02.05—Vacant**"

Replace "**1.02.06—Rejection of Non-responsive Proposals:** See Article 1.02.01." *with* "**1.02.06—Vacant**"

Replace "**1.02.07—Proposal Guaranty:** See Article 1.02.01." *with* "**1.02.07—Vacant**"

Replace "**1.02.08—Delivery of Proposal:** See Article 1.02.01." *with* "**1.02.08—Vacant**"

Replace "**1.02.09—Withdrawal of Proposals:** See Article 1.02.01." *with* "**1.02.09—Vacant**"

Replace "**1.02.10—Public Opening of Proposals:** See Article 1.02.01." *with* "**1.02.10—Vacant**"

Replace "**1.02.11—Miscellaneous Grounds for Rejection of Proposals:** See Article 1.02.01." *with* "**1.02.11—Vacant**"

Replace "**1.02.14—Sworn Statement by Bidder:** See Article 1.02.01." *with* "**1.02.14—Vacant**"

Replace "**1.02.15—Required Certifications of Eligibility to Bid:** See Article 1.02.01." *with* "**1.02.15—Vacant**"

CONNECTICUT
SUPPLEMENTAL SPECIFICATION
SECTION 1.03
AWARD AND EXECUTION OF CONTRACT

Replace Article 1.03.07 in its entirety with the following:

1.03.07—Insurance:

Coverage shall be on a primary basis.

The Contractor shall carry and maintain at all times during the term of the Contract the insurance coverages required by this Article and any additional coverages(s) or higher minimum insurance coverage amount(s) required by the Special Provisions of the Contract.

If the Project includes work on or adjacent to railroad property additional insurance may be required as specified by the railroad. Please refer to the Special Provisions for any additional insurance requirements by the railroad.

1. **Worker's Compensation Insurance:** With respect to all operations the Contractor performs and all those performed for it by subcontractors, the Contractor shall carry, and require each subcontractor to carry, Workers' Compensation insurance as required by the laws of the State of Connecticut.

Employer's Liability insurance shall be provided in amounts not less than $100,000 per accident for bodily injury by accident; $100,000 policy limit by disease and $100,000 per employee for bodily injury by disease. Each Workers' Compensation policy shall contain the U.S. Longshoreman's and Harbor Workers' Act endorsement when work is to be performed over or adjacent to navigable water.

2. **Commercial General Liability Insurance:** With respect to the operations the Contractor performs and also those performed for it by subcontractors, the Contractor shall carry, and require each subcontractor to carry, Commercial General Liability insurance, including Contractual Liability, Products and Completed Operations, Broad Form Property Damage and Independent Contractors.

Products and completed operations insurance for ongoing and completed operations shall be maintained for a period of one (1) year after the acceptance of the project by the Department in accordance with Article 1.08.14. See chart below for applicable minimum coverage amounts.

Contract Amount ($)	Minimum Single Occurrence Amount ($)	Minimum Annual Aggregate Amount ($)
0-2,000,000	1,000,000	2,000,000
>2,000,001-10,000,000	2,000,000	4,000,000
>10,000,000	4,000,000	8,000,000

In Facilities construction projects, if underground work is to be undertaken, each policy shall have coverage for and exclusions removed for “Explosion, Collapse and Underground” (“XCU”).

3. **Automobile Liability Insurance:** The Contractor shall obtain automobile liability insurance covering the operation of all motor vehicles, including those hired or borrowed, that are used in connection with the Project for all damages arising out of: (1) bodily injury to or death of all persons and/or (2) injury to or destruction of property; in any one accident or occurrence. This policy shall not be subject to an annual aggregate limitation. See chart above for applicable minimum coverage amounts.

4. **Owner’s and Contractor’s Protective Liability Insurance for and in the Name of the State:** With respect to the Contractor’s Project operations and also those of its subcontractors, the Contractor shall carry, for and on behalf of the State for each accident or occurrence resulting in damages from (1) bodily injury to or death of persons and/or (2) injury to or destruction of property. See chart below for applicable minimum coverage amounts.

Contract Amount ($)	Minimum Single Occurrence Amount ($)	Minimum Annual Aggregate Amount ($)
0 - 20 Million	1,000,000	1,000,000
20 Million - 50 Million	2,000,000	2,000,000
> 50 Million	4,000,000	4,000,000

5. **Railroad Protective Liability Insurance:** When the Contract involves work within fifty (50) feet of the railroad right-of-way or State-owned rail property, with respect to Project operations and also those of its subcontractors, the Contractor shall carry Railroad Protective Liability Insurance providing coverage of at least $2,000,000 for each accident or occurrence resulting in damages from (1) bodily injury to or death of all persons and/or (2) injury to or destruction of property, and subject to that limit per accident or occurrence, an aggregate coverage of at least $6,000,000 for all damages during the policy period, and with all entities falling within any of the following listed categories named as insured parties: (i) the owner of the railroad right-of-way, (ii) the owner of any railcar licensed or permitted to travel within that affected portion of railroad right-of-way, and (iii) the operator of any railcar licensed or permitted to travel within that affected portion of the railroad right-of-way, and with the State, if not falling within any of the above-listed categories, also named as an insured party.

6. **Blasting:** When explosives are to be used in the Project, the Commercial General Liability insurance policy shall include XCU coverage, in the same limits as the per occurrence policy limits.

7. **Protection and Indemnity Insurance for Marine Construction Operations in Navigable Waters:**

If a vessel of any kind will be involved in Project work, the Contractor shall obtain the following additional insurance coverage:

A. Protection and Indemnity Coverage of at least $300,000 per vessel or equal to at least the value of hull and machinery, whichever is greater.

B. If there is any limitation or exclusion with regard to crew and employees under the protection and indemnity form, the Contractor must obtain and keep in effect throughout the Project a workers' compensation policy, including coverage for operations under admiralty jurisdiction, with a limit of liability of at least $300,000 per accident or a limit equal to at least the value of the hull and machinery, whichever is greater, or for any amount otherwise required by statute.

8. **Builder's Risk Insurance:** For Facilities construction projects, the Contractor shall maintain comprehensive replacement cost builder's risk (completed value) insurance providing coverage for the entire work at the Project site, including all fixtures, machinery and equipment, any heating, cooling and constituting a permanent part of the building and shall cover portions of work located away from the site, but intended for use at the site. If it is determined that all or a portion of the project is located within an area designated as a Special Flood Hazard Area, the Contractor shall maintain flood insurance (no less than $10,000,000 sublimit). The State of Connecticut shall be named as Loss Payee. Equipment breakdown coverage may be sub limited to 50% of the project cost.

9. **Architects and Engineer's Professional Liability Insurance for Structural Engineer:** If required, limits will be specified in Article 1.03.07 of the Special Provisions of the Contract or Article 1.05.02.

10. **Umbrella Liability Insurance:** The Contractor may satisfy the minimum limits required for Commercial General Liability and Automobile Liability Insurance using Umbrella Liability Insurance. In the event that the Contractor obtains Umbrella Liability Insurance to meet the minimum coverage requirements for Commercial General Liability or Automobile Liability Insurance coverage, the Umbrella Liability Insurance policy shall have an annual aggregate at a limit not less than twice the single occurrence and must specifically endorse the State of Connecticut as an additional insured. Specifically for Bridge Projects with a low bid equal to or higher than $80,000,000, the Umbrella Liability Insurance policy must have a minimum limit of at least $25,000,000.

11**.** **Certificate of Insurance:** Before the Contract is executed, the Contractor must provide to the Department a certificate of insurance acceptable to the Commissioner and executed by an insurance company or companies satisfactory to the State of Connecticut for the insurance coverage(s) required by this Article and the Special

Provisions of the Contract. The Contractor shall maintain the required insurance coverage during the entire term of the Contract. The certificate of insurance must clearly include the name of the insured and identify the project for which it is being issued.

12. **Copies of Policies:** The Contractor shall provide, within five (5) business days, a copy or copies of all applicable insurance policies when requested by the State. In providing said policies, the Contractor may redact provisions of the policy that are proprietary. This provision shall survive the expiration or termination of the Contract.

13. **Sovereign Immunity:** The Contractor may not assert the defense of sovereign immunity in the adjustment of claims or in the defense of any claim or suit brought against the Contractor or the State, unless the State, in writing, requests that the Contractor do so or consents to its doing.

14. **Contractor Assumes Costs:** The Contractor shall assume and pay all costs and billings for premiums, deductibles, self-insured retentions and audit charges earned and payable under the required insurance.

15. **State Named as Additional Insured:** The State must be named as an additional insured party for the Commercial General Liability and Automobile Liability insurance policies required by this Article and the Special Provisions to the Contract, and any Umbrella Liability Insurance, as applicable, obtained in accordance with this Article. Each policy shall waive right of recovery (waiver of subrogation) against the State of Connecticut.

16. **Termination or Change of Insurance:**

A. The Contractor shall notify the Department of any cancelation of insurance carrier or change to the required insurance coverage by submitting a new insurance certificate to the Department immediately following said cancelation or change in required coverage.

B. It is the responsibility of the Contractor to maintain evidence of a current insurance coverage with the Department for the duration of contract. It is the responsibility of the Contractor to file with the Department all renewals and new certificates of insurance issued due to changes in policy terms or changes in insurance carriers prior to the expiration dates on the forms already on file with the Department.

17. **Duration of Coverage**. The Contractor shall keep all the required insurance in continuous effect until the date that the Department designates for the termination of the Contractor's responsibility, as defined by Article 1.08.14.

18. **Compensation:** There shall be no direct compensation allowed the Contractor on account of any premium or other charge necessary to obtain and keep in effect any insurance or bonds in connection with the Project, but the cost thereof shall be considered included in the general cost of the Project work.

CONNECTICUT
SUPPLEMENTAL SPECIFICATION
SECTION 1.05
CONTROL OF THE WORK

In the list of Articles, replace "**1.05.02—Plans, Working Drawings and Shop Drawings**" *with* "**1.05.02—Plans, Working Drawings, Shop Drawings, Product Data, Submittal Preparation and Processing, and Designers Action**"

Replace "**1.05.08—Vacant**" *with* "**1.05.08—Schedules and Reports**"

After "**1.05.16—Dimensions and Measurements**" *add* "**1.05.17—Welding**"

1.05.01—Authority of Engineer

In the second sentence of the third paragraph, change "Connecticut General Statutes" *to* "CGS."

1.05.02—Plans, Working Drawings and Shop Drawings

Delete the entire Article and replace it with the following:

1.05.02—Plans, Working Drawings, Shop Drawings, Product Data, Submittal Preparation and Processing, and Designers Action:

1. Plans: The plans prepared by the Department show the details necessary to give a comprehensive idea of the construction contemplated under the Contract. The plans will generally show location, character, dimensions, and details necessary to complete the Project. If the plans do not show complete details, they will show the necessary dimensions and details, which when used along with the other Contract documents, will enable the Contractor to prepare working drawings, shop drawings or product data necessary to complete the Project.

2. Working Drawings: When required by the Contract, or when ordered to do so by the Engineer, the Contractor shall prepare and submit six printed copies and one electronic copy in a pdf file format of the working drawings, signed, sealed and dated by a qualified Professional Engineer licensed to practice in the State of Connecticut, for review. The drawings shall be submitted to the Assistant District Engineer sufficiently in advance of the work detailed, to allow for their review in accordance with the review periods specified in Subarticle 1.05.02-5 (including any necessary revisions, resubmittal, and final review).

There will be no direct payment for furnishing any working drawings, procedures or supporting calculations, but the cost thereof shall be considered as included in the general cost of the work.

a. Working Drawings for Permanent Construction: Drawings shall be submitted on 22 in x 34 in (559 mm x 864 mm) sheets with a border and title block similar to the Department standard. Calculations, procedures and other supporting data may be submitted in an 8-1/2 in x 11 in (216 mm x 279 mm) format.

   The Contractor shall supply to the Assistant District Engineer a certificate of insurance in accordance with Article 1.03.07 at the time that the working drawings for the Project are submitted.

   The Contractor's designer, who prepares the working drawings, shall secure and maintain at no direct cost to the State a Professional Liability Insurance Policy for errors and omissions in the minimum amount of $2,000,000 per error or omission. The Contractor's designer may elect to obtain a policy containing a maximum

$250,000 deductible clause, but if the Contractor's designer should obtain a policy containing such a clause, they shall be liable to the extent of at least the deductible amount. The Contractor's designer shall obtain the appropriate and proper endorsement of its Professional Liability Policy to cover the indemnification clause in this Contract, as the same relates to negligent acts, errors or omissions in the Project work performed by them. The Contractor's designer shall continue this liability insurance coverage for a period of (1) 3 years from the date of acceptance of the work by the Engineer, as evidenced by a State of Connecticut, Department of Transportation Form Number CON-500, entitled "Certificate of Acceptance of Work," issued to the Contractor; or (2) 3 years after the termination of the Contract, whichever is earlier, subject to the continued commercial availability of such insurance.

b. Working Drawings for Temporary Construction: The Contractor shall submit drawings, calculations, procedures and other supporting data in a format acceptable to the Assistant District Engineer.

3. Shop Drawings: When required by the Contract, or when ordered to do so by the Engineer, the Contractor shall prepare and submit six printed copies and one electronic copy in a pdf file format of the shop drawings to the Designer for review. Review timeframes and submission locations are specified in Subarticle 1.05.02-5.

Drawings shall be submitted on 22 in x 34 in (559 mm x 864 mm) sheets with an appropriate border and with a title block in the lower right-hand corner of each sheet. Procedures and other supporting data may be submitted on 8½ in x 11 in (216 mm x 279 mm) sheets.

There will be no direct payment for furnishing any shop drawings, but the cost thereof shall be considered as included in the general cost of the work.

4. Product Data: When required by the Contract, or when ordered to do so by the Engineer, the Contractor shall prepare and submit six printed copies and one electronic copy in a pdf file format of the product data.

The product data shall be submitted to the Designer for review, sufficiently in advance of the work detailed, to allow for their review in accordance with the review periods specified in Subarticle 1.05.02-5 (including any necessary revisions, resubmittal, and final review), and acquisition of materials, without causing a delay of the Project.

The Contractor shall submit the product data in a single submittal for each element of construction.

The Contractor shall mark each copy of the product data submittal to show applicable choices and options. Where product data includes information on several products that are not required, copies shall be marked to indicate the applicable information. Product data shall include the following information and confirmation of conformance with the Contract to the extent applicable: manufacturer's printed recommendations, compliance with recognized trade association standards, compliance with recognized testing agency standards, application of testing agency labels and seals, notation of coordination requirements, Contract item number, and any other information required by the individual Contract provisions.

There will be no direct payment for furnishing any product data, but the cost thereof shall be considered as included in the general cost of the work.

5. Submittal Preparation and Processing – Review Timeframes: The Contractor shall allow 30 calendar days for submittal review by the Department, from the date of receipt of printed copies in the appropriate Designer or Engineer's office. For any submittals marked with "Revise and Resubmit" or "Rejected," the Department is allowed an additional 20 calendar days for review of any resubmissions.

An extension of Contract time will not be authorized due to the Contractor's failure to transmit submittals sufficiently in advance of the work to permit processing.

The furnishing of shop drawings, working drawings or product data, any comments or suggestions by the Designer or Engineer concerning shop drawings, working drawings or product data, shall not relieve the Contractor of any of its responsibility for claims by the State or by third parties, as per Article 1.07.10.

The furnishing of the shop drawings, working drawings and product data shall not serve to relieve the Contractor of any part of its responsibility for the safety or the successful

completion of the Project construction.

Submissions: Unless otherwise defined in the Contract, the Contractor shall transmit the working drawings, shop drawings and product data as follows:

(a) Working drawings for permanent construction, shop drawings, and product data shall be submitted to the Designer. A copy of the transmittal or cover letter shall be forwarded to the Assistant District Engineer of the administering Construction District.

(b) Working drawings for temporary construction shall be submitted to the Assistant District Engineer of the administering Construction District.

(c) If not provided in the Contract, the Contractor shall request a list detailing the delivery location and contact person for each type of submittal, from the administering Construction District.

6. Designers Action: The Designer or Engineer will review each submittal, mark each with a uniform, self-explanatory action stamp, and return the stamped submittal promptly to the Contractor. The Contractor shall not proceed with the part of the Project covered by the submittal until the submittal is marked “No Exceptions Noted” or “Exceptions as Noted” by the Designer or Engineer. The Contractor shall retain sole responsibility for compliance with all Contract requirements. The stamp will be marked as follows to indicate the action taken:

(a) If submittals are marked “No Exceptions Noted,” the Designer or Engineer has not observed any statement or feature that appears to deviate from the Contract requirements. This disposition is contingent on being able to execute any manufacturer’s written warranty in compliance with the Contract provisions. The Contractor may proceed with the work covered in the submittal.

(b) If submittals are marked “Exceptions as Noted” the considerations or changes noted by the Designer or Engineer are necessary in order for the submittal to comply with Contract requirements. The Contractor shall review the required changes and inform the Designer or Engineer if they feel the changes violate a provision of the Contract or would lessen the warranty coverage.

(c) If submittals are marked “Revise and Resubmit,” the Contractor shall revise the submittals to address the deficiencies or provide additional information as noted by the Designer or Engineer. The Contractor shall allow an additional review period as specified in Subarticle 1.05.02-5.

(d) If submittals are marked “Rejected,” the Contractor shall prepare and submit a new submittal in accordance with the Designer’s or Engineer’s notations. The resubmissions require an additional review and determination by the Designer or Engineer. The Contractor shall allow an additional review period as specified in Subarticle 1.05.02-5.”

1.05.05—Cooperation by Contractor:

After the second paragraph, add the following:

“ Voluntary Partnering: The Connecticut Department of Transportation ("Department") wants to establish a cohesive partnership with the Contractor and its principal subcontractors on the Project, so that the partnership can draw on the strengths of each organization in order to identify and pursue the partners' mutual Project goals. Chief among those will be the effective and efficient completion of the Project, within budget, on schedule, and in accordance with applicable plans, specifications, and other Contract provisions.

If the Contractor believes at any point before or during Project construction that the creation of formal partnering between itself and the Department, with the use of a third-party facilitator, would help the Contractor and the Department ("Partners") to reach these goals, the Contractor may submit a written request to the District Engineer of the District in which the Project will be constructed for the establishment of formal partnering between the Parties. If the Contractor makes such a request, the Department will engage in that partnering.

Any costs incurred by the Partners jointly in connection with Project partnering activities, to the extent that those costs are recognized as legitimate and appropriate by both Partners, will be shared equally between them. Any other costs incurred because of partnering activities will be borne by the Partner that incurred them.

If the Contractor and the Department decide to pursue a formal partnering initiative, the Contractor and The Department will arrange first to meet in order to select a third-party partnering facilitator and to plan a partnering development and team-building workshop. After they agree upon the services to be performed by the facilitator and the range of compensation for the facilitator that would be acceptable to them, the Contractor will contract accordingly for the services of said facilitator. The Department will reimburse the Contractor for fifty percent (50%) of the payments made under that contract, so long as the activities paid for were appropriate and within the contemplation of the Partners.

At the Partners' initial partnering meeting, the Partners will also determine who should attend the first partnering workshop, what the workshop's agenda will be, how long the workshop should last, and when and where it will be held. Unless the Partners agree otherwise, attendance at the first partnering workshop will be mandatory for the Department's District Engineer for the Project and the Department's other key Project personnel, the Contractor's on-Site Project manager and other key supervisory Project personnel, and, if the Contractor agrees to it, the key supervisory personnel of the Contractor's principal Project subcontractors. The Partners will also request that the Project design engineers and key local government personnel send Regional/District and Corporate/State-level managers to the workshop and direct them to participate in Project partnering activities as and when requested to do so by the Partners.

With the agreement of the Partners, follow-up Project partnering workshops will be held periodically until the Department closes out the Contract.

If the Partners agree on a formal partnering charter for the Project, the establishment of that charter will not change the legal relationship of the Partners to the Contract; it will not alter, supplement, or eliminate any of the Partners' rights or obligations under the Contract."

1.05.08–Vacant

Replace with the following:

"**1.05.08—Schedules and Reports:**

When a project coordinator is not required by the Contract the following shall apply:

Baseline Bar Chart Construction Schedule: Within 20 calendar days after contract award the Contractor shall develop a comprehensive bar chart as a baseline schedule for the project. The bar chart schedule shall be submitted to the Engineer for approval and shall be based on the following guidelines:

1. The bar chart schedule shall contain a list of activities that represents the major activities of the project. At a minimum, this list should include a breakdown by individual structure or stage, including major components of each. The bar chart schedule shall contain sufficient detail to describe the progression of the work in a comprehensive manner. As a guide, 10 to 15 bar chart activities should be provided for each $1 million of contract value.

The following list is provided as an example only and is not meant to be all-inclusive or all-applicable:

Project Constraints

-Winter shutdowns
-Environmental permits/application time of year restrictions
-Milestones
-Third Party approvals
-Long lead time items (procurement and fabrication of major elements)

-Adjacent Projects or work by others
Award
Notice to Proceed
Signing (Construction, temporary, permanent by location)
Mobilization
Permits as required
Field Office
Utility Relocations
Submittals/shop drawings/working drawings/product data
Construction of Waste Stock pile area
Clearing and Grubbing
Earthwork (Borrow, earth ex, rock ex etc.)
Traffic control items (including illumination and signalization)
Pavement markings
Roadway Construction (Breakdown into components)
Drainage (Breakdown into components)
Culverts
Plantings (including turf establishment)
Semi-final inspection
Final Cleanup

As required the following may supplement the activities listed above for the specific project types indicated:

a. For bridges and other structures, include major components such as abutments, wingwalls, piers, decks and retaining walls; further breakdown by footings, wall sections, parapets etc.
   Temporary Earth Retention Systems
   Cofferdam and Dewatering
   Structure Excavation
   Piles/test piles
   Temporary Structures
   Removal of Superstructure
   Bearing Pads
   Structural Steel (Breakdown by fabrication, delivery, installation, painting etc.)
   Bridge deck
b. Multiple location projects such as traffic signal, incident management, lighting, planting and guiderail projects will be broken down first by location and then by operation. Other major activities of these types of projects should include, but are not limited to:
   Installation of anchors
   Driving posts
   Foundations
   Trenching and Backfilling
   Installation of Span poles/mast arms
   Installation of luminaries
   Installation of cameras
   Installation of VMS
   Hanging signal heads
   Sawcut loops
   Energizing equipment

c. Facility Projects – Facilities construction shall reflect the same breakdown of the Project as the Schedule of Values:
Division 2 – Existing Conditions
Division 3 – Concrete
Division 4 – Masonry
Division 5 – Metals
Division 6 – Wood, Plastic, and Composites
Division 7 – Thermal and Moisture Protection
Division 8 – Openings
Division 9 – Finishes
Division 10 – Specialties
Division 11 – Equipment
Division 12 - Furnishings
Division 13 – Special Construction
Division 14 – Conveying Equipment
Division 21 – Fire Suppression
Division 22 – Plumbing
Division 23 – Heating, Ventilating, and Air Conditioning
Division 26 – Electrical
Division 27 – Communications
Division 28 – Electronic Safety and Security
Division 31 – Earthwork
Division 32 – Exterior Improvements
Division 33 - Utilities

2. If the Engineer determines that additional detail is necessary, the Contractor shall provide it.
3. Each activity shall have a separate schedule bar. The schedule timeline shall be broken into weekly time periods with a vertical line to identify the first working day of each week.
4. The bar chart schedule shall show relationships among activities. The critical path for the Project shall be clearly defined on the schedule. The schedule shall show milestones for major elements of work, and shall be prepared on a sheet, or series of sheets of sufficient width to show data for the entire construction period.
5. If scheduling software is used to create the bar chart schedule, related reports such as a predecessor and successor report, a sort by total float, and a sort by early start shall also be submitted.
6. Project activities shall be scheduled to demonstrate that the construction completion date for the Project will occur prior to expiration of the Contract time. In addition, the schedule shall demonstrate conformance with any other dates stipulated in the Contract.
7. The Contractor is responsible to inform its subcontractor(s) and supplier(s) of the project schedule and any relevant updates.
8. There will be no direct payment for furnishing schedules, the cost thereof shall be considered as included in the general cost of the work.
9. For projects without a Mobilization item, 5% of the Contract value will be withheld until such time as the Baseline Schedule is approved.

Monthly Updates: No later than the 10th day of each month, unless directed otherwise by the Engineer, the Contractor shall deliver to the Engineer 3 copies of the schedule to show the work actually accomplished during the preceding month, the

actual time spent on each activity, and the estimated time needed to complete any activity which has been started but not completed. Each time bar shall indicate, in 10% increments, the estimated percentage of that activity which remains to be completed. As the Project progresses, the Contractor shall place a contrasting mark in each bar to indicate the actual percentage of the activity that has been completed.

The monthly update shall include revisions of the schedule necessitated by revisions to the Project directed by the Engineer (including, but not limited to extra work), during the month preceding the update. Similarly, any changes of the schedule required due to changes in the Contractor's planning or progress shall also be included. The Engineer reserves the right to reject any such revisions. If the schedule revisions extend the Contract completion date, due to extra or added work or delays beyond the control of the Contractor, the Contractor shall submit a request in writing for an extension of time in accordance with Article 1.08.08. This request shall be supported by an analysis of the schedules submitted previously.

Any schedule revisions shall be identified and explained in a cover letter accompanying the monthly update. The letter shall also describe in general terms the progress of the Project since the last schedule update and shall identify any items of special interest.

If the Contractor fails to provide monthly schedule updates, the Engineer has the right to hold 10% of the monthly estimated payment, or $5,000, whichever is less, until such time as an update has been provided in accordance with this provision.

Biweekly Schedules: Each week, the Contractor shall submit to the Engineer a 2 week look-ahead schedule. This short-term schedule may be handwritten but shall clearly indicate all work planned for the following 2 week period.

Recovery Schedules: If the updated schedule indicates that the Project has fallen behind schedule, the Contractor shall either submit a time extension request in accordance with 1.08.08 or immediately institute steps acceptable to the Engineer to improve its progress of the Project. In such a case, the Contractor shall submit a recovery plan, as may be deemed necessary by the Engineer, to demonstrate the manner in which an acceptable rate of progress will be regained."

1.05.09–Authority of Inspectors:

Delete the second paragraph.

1.05.10–Inspection:

Replace the first paragraph with the following:

" All materials and each part or detail of the Project work shall be subject at all times to inspection by the Engineer. Such inspection may take place on the Site or at an offsite location, such as a mill, subcontractor fabrication plant or shop, or other type of location. The Engineer shall be allowed access to all parts of the work and shall be furnished with such information and assistance by the Contractor as the Engineer deems necessary to make complete, detailed, and timely inspections. Inspection reports may include written observations, sketches, and photographs as deemed appropriate by the inspector. The

Contractor shall allow the Engineer to collect such information without restriction on the Site and shall ensure that the Engineer will have the same unrestricted ability to gather such pertinent information regarding Project work or materials at a location controlled by a subcontractor or supplier of the Contractor."

In the first sentence of the second paragraph, replace "on the Project" *with* "on the Project site"

After the second paragraph, add the following paragraph:

" The Contractor shall provide the Engineer the name(s), contact information, and location(s) of any subcontractor(s) fabricating materials or components outside the Project limits for permanent incorporation into the Project. The Contractor shall provide such information sufficiently in advance of such fabrication to allow the Engineer to schedule inspections of said fabrication, and the Contractor shall ensure that such work does not commence until it has confirmed that the Engineer has arranged for adequate inspection at the offsite location(s). Any such work done without inspection by a Department representative may be ordered exposed for examination and testing. If the Engineer then judges that the work requires correction or restoration, the Contractor shall perform such remedial work at its own expense."

After the last paragraph, add the following paragraph:

" The fact that the Engineer may have conducted or failed to conduct, or conducted insufficiently or inaccurately, any inspection of Project work will not relieve the Contractor of its responsibility to perform the Project work properly, to monitor its work and the work of its subcontractors, and to institute and maintain quality control procedures appropriate for the proper execution of Project work."

1.05.12–Payrolls:

Replace the first paragraph with the following:

" For each week of the Project from the first week during which an employee of the Contractor does Project work to which prevailing wage requirements apply, until the last week on which such an employee does such work, the Contractor shall furnish to the Engineer certified copies of payrolls showing:

(a) the names of the employees who worked on the Project and whose work is subject to prevailing wage requirements,
(b) the specific days and hours and numbers of hours that each such employee worked on the Project, and
(c) the amount of money paid to each such employee for Project work.

Each such payroll shall include the statement(s) of compliance with prevailing wage laws required by the State of Connecticut and, if applicable, by the Federal government. Said payrolls must contain all information required by Connecticut General Statutes Section 31-53 (as it may be revised). For contracts subject to Federal prevailing wage requirements, each payroll shall also contain the information required by the Davis Bacon and Related Acts (DBR). All of the payroll requirements in this Article shall also apply to the work of any subcontractor or other party that performs work on the Project

site, and the Contractor shall be responsible for ensuring that each such party meets said requirements."

1.05.15–Markings for Underground Facilities:

Replace the beginning of the first sentence with the following:

" In conformance with Sections 16-345 through 16-359 of the Regulations of the PURA state statutes, the Contractor is responsible for notifying 'Call Before You Dig' ..."

After **Article 1.05.16–Dimensions and Measurements**, *add the following article:*

"**1.05.17 – Welding:**

The Contractor shall ensure that all welding of materials permanently incorporated into the work, and welding of materials used temporarily during construction of the work is performed in accordance with the following codes:

- American Welding Society (AWS) Structural Welding Code – Steel – ANSI/AWS D1.1: Miscellaneous steel items that are statically loaded including but not limited to columns, and floor beams in buildings, railings, sign supports, cofferdams, tubular items, and modifications to existing statically loaded structures.
- AWS Structural Welding Code – Aluminum – AWS D1.2/D1.2M: Any aluminum structure or member including but not limited to brackets, light standards, and poles.
- AWS Structural Welding Code – Sheet Steel – AWS D1.3/D1.3M: Sheet steel and cold-formed members 0.18 in.(4.6 mm) or less in thickness used as, but not limited, to decking and stay-in-place forms.
- AWS Structural Welding Code – Reinforcing Steel – AWS D1.4/D1.4M: Steel material used in the reinforcement of cast-in-place or pre-cast Portland cement concrete elements including but not limited to bridge decks, catch basin components, walls, beams, deck units, and girders.
- AASHTO/AWS – Bridge Welding Code, AASHTO/AWS D1.5/D1.5M: Steel highway bridges and other dynamically loaded steel structures. Also includes sign supports, and any other fracture critical structure.

The edition governing the work shall be in effect on the date the Contract was advertised for solicitation of bids.

The Contractor is responsible to provide a Certified Welding Inspector in accordance with the above noted codes. The cost for this service is included in the general cost of the work.

All welders shall be certified by the Engineer in accordance with Section 6.03."

CONNECTICUT
SUPPLEMENTAL SPECIFICATION
SECTION 1.06
CONTROL OF MATERIALS

1.06.02 – Samples and Test:

Replace the first three paragraphs with the following:

"1.06.02 – **Samples and Test**: The Contractor must obtain the Engineer's approval of any sources of materials to be incorporated into the Project before beginning to use them for the Project.

Approval of materials sources may be by (1) certification accepted by the Engineer, (2) written permission of the Engineer, or (3) prior approval after documented test or inspection of the source by the Department. Any Project work in which materials from unapproved sources are used may be considered unauthorized by the Engineer, and therefore not to be paid for. Materials tests or inspection from sources or material delivered to a project site, when required, will be made by and at the expense of the Department, unless otherwise noted in the Contract.

Certification may be used as the basis for approval of such materials, as the Contract documents specify or as the Engineer may require. With regard to such materials, the Contractor may furnish the Engineer a Certified Test Report and Materials Certificate, conforming to Article 1.06.07, as may be required in the 'Minimum Schedule for Acceptance Testing' for each type of material. The Contractor shall bear any costs involved in furnishing the Test Report and Certificate."

Replace the fourth paragraph with the following:

"Material samples required by the Department will be as indicated in the latest edition of the 'Minimum Schedule for Acceptance Testing,' http://www.ct.gov/dot/lib/dot/documents/dpublications/dmt-manual_2015_v7d.pdf and tests will be performed in accordance with the latest revision of the standard method of AASHTO or ASTM, or in accordance with other standards accepted by the Department which are in effect at the time of bidding, unless otherwise specified on the plans or in the special provisions. Any items not covered in the 'Minimum Schedule for Acceptance Testing,' special provisions, or plans shall be sampled and tested or certified, as directed by the Engineer."

1.06.07 – Certified Test Reports and Materials Certificates:

Replace the first three paragraphs with the following:

"1.06.07 – Certified Test Reports and Materials Certificates: The Contractor shall furnish the Engineer with any Certified Test Report and Materials Certificate required by the Contract or the "Minimum Schedule for Acceptance Testing."

The Contractor shall forward the Certified Test Report and Materials Certificate to the

Engineer, and, in addition, shall deliver a copy of same to the Department's inspector at the Site. Materials for which such documentation is required may be conditionally incorporated into the Project prior to the Engineer's acceptance of a Certified Test Report and a Materials Certificate; however, payment for such incorporated material will not be made prior to receipt of a Certified Test Report and Materials Certificate indicating that the materials meets the Contract requirements.

A Certified Test Report is a document containing a list of the dimensional, chemical, metallurgical, electrical and physical results obtained from a physical test of the materials involved, and shall certify that the materials meet the requirements of the Contract. Such Report shall also include the following information:

(1) Item number and description of materials
(2) Date of manufacture
(3) Date of testing
(4) Name of organization to which the material has been consigned
(5) Quantity of material represented, such as batch, lot, group, etc.
(6) Means of identifying the consignment, such as label, marking, lot number, etc.
(7) Date and method of shipment
(8) Name of organization performing tests"

CONNECTICUT
SUPPLEMENTAL SPECIFICATION
SECTION 1.07
LEGAL RELATIONS AND RESPONSIBILITIES

In the list of Articles, change **"1.07.07 – Public Convenience and Safety"** *to* **"1.07.07 – Safety and Public Convenience."**

1.07.05 – Load Restrictions

Delete the entire article and replace with the following:

"**1.07.05 – Load Restrictions**

(a) Vehicle Weights: This subarticle will apply to travel both on existing pavements and pavements under construction. The Contractor shall comply with all legal load restrictions as to vehicle size, the gross weight of vehicles, and the axle weight of vehicles while hauling materials. Throughout the duration of the contract, the Contractor shall take precautions to ensure existing and newly installed roadway structures and appurtenances are not damaged by construction vehicles or operations.

Unless otherwise noted in contract specifications or plans, on and off road equipment of the Contractor, either loaded or unloaded, will not be allowed to travel across any bridge or on any highway when such a vehicle exceeds the statutory limit or posted limit of such bridge or highway. Should such movement of equipment become necessary the Contractor shall apply for a permit from the Department for such travel, as provided in the Connecticut General Statutes (CGS). The movement of any such vehicles within the project limits or detour routes shall be submitted to the Engineer for project record. Such permit or submittal will not excuse the Contractor from liability for damage to the highway caused by its equipment.

The Contractor is subject to fines, assessments and other penalties that may be levied as a result of violations by its employees or agents of the legal restrictions as to vehicle size and weight.

(b) Storage of Construction Materials/Equipment on Structures: Storage is determined to be non-operating equipment or material. The Contractor shall not exceed the statutory limit or posted limit for either an existing or new structure when storing materials and/or construction equipment. When a structure is not posted, then the maximum weight of equipment or materials stored in each 12 foot wide travel lane of any given span shall be limited to 750 pounds per linear foot combined with a 20,000 pound concentrated load located anywhere within the subject lane. If anticipated storage of equipment or material exceeds the above provision, then the Contractor shall submit his proposal of storage supported by calculations stamped by a Professional Engineer registered in the State of Connecticut, to the Engineer for approval 14 days prior to the storage operation. Operations related to structural steel demolition or erection shall follow the guidelines under Section 6.03. All other submittals shall include a detailed description of the material/equipment to be stored, the quantity of storage if it is stockpiled materials, the storage location, gross weight with supporting calculations if applicable, anticipated duration of storage and any environmental safety, or traffic protection that may be required. Storage location on the structure shall be clearly defined in the field. If structures are in a state of staged construction or demolition, additional structural analysis may be required prior to authorization of storage."

1.07.07 – Safety and Public Convenience

Change the title of Article 1.07.07 to read **"1.07.07 – Safety and Public Convenience"** *and change the last sentence of the seventh paragraph to read as follows:*

"The Contractor must make available for reference in its field office, throughout the duration of the Project, a copy of the Safety Plan and the latest edition, including all supplements, of the CFR pertaining to OSHA."

After the ninth paragraph insert the following:

" Before beginning work on the Project, the Contractor shall have a Safety Plan on file with the Department. The Safety Plan shall include the policies and procedures necessary for the Contractor to comply with OSHA and other pertinent regulatory rules, regulations and guidelines. The Safety Plan may be a comprehensive company-wide plan provided it addresses the scope and type of work contemplated by the Contract. The Safety Plan shall address all the requirements of this Section and any applicable State or Federal regulations, and shall be revised and updated as necessary.

The following elements shall be included in the Safety Plan:

1. General introduction describing the scope and applicability of the Safety Plan.
2. Identification of key staff responsible for the implementation and monitoring of the Contractor's Safety Plan, and their roles and responsibilities for safety.
3. Training requirements relative to safety.
4. Safety rules and checklists specific to the types of work generally performed by the Contractor.
5. Record-keeping and reporting requirements.
6. Identification of special hazards related to specific work elements.

The Contractor is responsible for the Safety Plan. Pursuant to Article 1.07.10, the Contractor shall indemnify, and save harmless the State from any and all liability related to any violation of the Safety Plan."

1.07.18 – Use of State Property

After Subarticle **(h)** *add the following sentence:*

"Gore areas are not available for disposal of surplus material."

CONNECTICUT
SUPPLEMENTAL SPECIFICATION
SECTION 1.08
PROSECUTION AND PROGRESS

1.08.01 – Transfer of Work or Contract:

Replace the last paragraph with the following paragraphs:

" The Contractor shall not sublet, sell, transfer, assign, or otherwise dispose of the Contract or any portion thereof, or of the work provided for therein, or of its right, title, or interest therein, to any individual or entity without the written consent of the Commissioner. No payment will be made for such work until written consent is provided by the Commissioner.

The Contractor shall pay the subcontractor for work performed within thirty (30) days after the Contractor receives payment for the work performed by the subcontractor. Withholding retainage by the Contractor, subcontractor or lower tier subcontractors is not allowed.

Payment for work that has been performed by a subcontractor does not eliminate the Contractor's responsibilities for all the work as defined in Article 1.07.12, "Contractor's Responsibility for Work."

Payment for work that has been performed by a subcontractor also does not release the subcontractor from its responsibility for maintenance and other periods of subcontractor responsibility specified for the subcontractor's items of work. Failure of a subcontractor to meet its maintenance, warranty or defective work responsibilities may result in administrative action on future Department contracts.

For any dispute regarding prompt payment, the alternate dispute resolution provisions of this article shall apply.

The above requirements are also applicable to all sub-tier subcontractors and the above provisions shall be made a part of all subcontract agreements.

Failure of the Contractor to comply with the provisions of this section may result in a finding that the Contractor is nonresponsible as a bidder for a Department contract."

1.08.07 – Determination of Contract Time:

Replace the first paragraph with the following:

" Unless the Contract requires the Project completion by a specified date, the number of calendar days allowed for the completion of the Project will be fixed by the Department, will be stated in the Contract, and will be known (with any subsequent adjustments) as the "Contract time." If at any time the Contractor submits a schedule showing completion of the work more than 30 calendar days in advance of the Contract completion date, the Department will issue a no-cost construction order revising the allowable Contract time to that shown on the Contractor's schedule."

Replace the fifth paragraph with the following:

“ The total elapsed time in calendar days, computed as described above, from the commencement date specified in the Engineer's "Notice to Proceed" to the “Substantial Completion” date specified in the Engineer's "Notice of Substantial Completion" shall be considered as the time used in the performance of the Contract work.”

1.08.09 – Failure to Complete Work on Time:

Replace the second paragraph with the following:

“ If the last day of the initial Contract time or the initial Contract date determined for Substantial Completion is before December 1 in the given year, liquidated damages as specified in the Contract shall be assessed against the Contractor per calendar day (including any days during a winter shutdown period) from that day until the date on which the Project is substantially completed.”

1.08.12—Final Inspection:

Replace the first paragraph with the following:

“ If the Engineer determines that the work may be substantially complete, a Semi Final Inspection will be held as soon as practical. After the Semi Final Inspection is held and the Engineer determines that the requirements for Substantial Completion have been satisfied the Engineer will prepare a “Notice of Substantial Completion”.

When the Contractor has completed all work listed in the “Notice of Substantial Completion” the Contractor shall prepare a written notice requesting a Final Inspection and a “Certificate of Acceptance of Work”. The Engineer will hold an Inspection of the Project as soon as practical after the Engineer determines that the Project may be completed. If the Engineer deems the Project complete, said inspection shall constitute the Final Inspection, and the Engineer will notify the Contractor in writing that the Final Inspection has been performed.”

1.08.13 – Acceptance of Work and Termination of the Contractor’s Responsibility:

Replace the only paragraph with the following:

“ The Contractor’s responsibility for non-administrative Project work will be considered terminated when the final inspection has been held, any required additional work and final cleaning-up have been completed, all final operation and maintenance manuals have been submitted, and all of the Contractor’s equipment and construction signs have been removed from the Project site. When these requirements have been met to the satisfaction of the Engineer, the Commissioner will accept the work by certifying in writing to the Contractor that the non-administrative Project work has been completed.”

CONNECTICUT
SUPPLEMENTAL SPECIFICATION
SECTION 1.09
MEASUREMENT AND PAYMENT

In the list of articles, make the following change:

"**1.09.02—Value Engineering Change Proposal**"

1.09.02—Value Engineering Change Proposal

Replace the entire article with the following:

"**1.09.02—Value Engineering Change Proposal:** These Value Engineering Change Proposal (VECP) provisions apply as encouragement to the Contractor to initiate, develop, and present to the Department for consideration cost- or time- reduction proposals or a combination of both conceived by the Contractor, involving changes to the drawings, designs, specifications, or other requirements of the Contract. These provisions do not apply unless the proposal submitted is specifically identified by the Contractor as being presented for consideration as a VECP. All such proposals must be made on the Department's VECP form, copies of which are available from the Department. The Department reserves the right to decline to review, or to reject after initial review, any VECP. Before expending considerable funds in development of a formal VECP, the Contractor shall submit a conceptual Proposal to the Department on Department-provided forms.

The proposals which may be considered as VECPs are those which, if implemented, (a) would require modification of the Contract by construction order; (b) would produce a savings to the Department by calling for the use of items or methods less costly than those specified in the Contract; (c) would not alter necessary standardized features of the original Project; and (d) would not impair essential functions or characteristics of the construction called for by the original Contract, such as service life, reliability, economy of operation, and ease of maintenance.

Material substitution alone will not be considered as a VECP.

A VECP may shorten Contract time, however, acceleration alone will not be considered as a VECP.

Cautions and Conditions:

1. The Contractor is cautioned not to base any bid or bid price on the anticipated approval of a VECP and to recognize that such Proposal may be rejected. The Contractor will be required to perform the Contract in accordance with the existing Contract plans and specifications at the prices bid unless and until the Department formally accepts, in writing, the Contractor's VECP.
2. In order for the Department to consider such a Proposal, the savings likely to be generated by the Proposal must be sufficient, in the sole judgement of the Department, to warrant its review and processing by the Department. All costs resulting from such review or processing will be borne by the Department. Before any VECP will be considered by the Department, the Department must determine, in its sole judgement, that implementation of the Proposal would result in a total cost savings of more than $100,000.00, reflecting a savings of at least $50,000.00 for the Department. The Department will not consider any VECP that would require an increase in Contract time.
3. All VECPs apply only to the ongoing Contract, and whether approved or not, such Proposals become the property of the Department. Such Proposals shall contain no restrictions imposed by the Contractor on their use or disclosure by the State. The

Department will have the right to use, duplicate and disclose in whole or in part any data necessary for the use or implementation of the Proposal. The Department retains the right to use any accepted Proposal or part thereof on any other current or subsequent Department projects without any obligation to the Contractor for such use. This provision is not intended to deny rights provided by law with respect to patented materials or processes.

4. If the Department already has under consideration certain revisions of the Contract or has approved certain changes in specifications or standard drawings for general use which subsequently appear in a VECP, the Department may reject the Contractor's Proposal and may proceed with such revisions without any obligation to the Contractor.
5. The Proposal must be presented and approved in writing prior to the Contractor's undertaking any work on the Contract items involved in the proposal. Savings due to a reduction in quantities or deletion of items which result solely from adjustments to field conditions, and Proposals which would only waive specification or other Contract requirements, are not considered to be VECPs.
6. The Contractor shall have no claim against the Department for any costs or delays due to the Department's review or rejection of a VECP, including, but not limited to, development costs, anticipated profits, or increased material or labor costs resulting from delays in the review or rejection of such Proposal.
7. The Department will be the sole judge of the acceptability of a Proposal and of the estimated net savings in construction costs that would result from adoption of all or any part(s) of such Proposal. In determining such estimated net savings, the Department reserves the right to disregard the Contract bid prices if, in the judgment of the Engineer, such prices do not represent a fair measure of the value of work to be performed or deleted under the Proposal. Errors in the estimated quantities in the bid proposal form for the Contract shall be corrected by the Department prior to calculating the savings that would likely result from adoption of the VECP.
8. The Engineer may reject all or any portion of work performed pursuant to an approved VECP if the Engineer determines that unsatisfactory results are being obtained because of the Proposal's implementation with regard to that work. The Engineer may direct the removal of such rejected work and require the Contractor to proceed in accordance with the original Contract requirements. Where modifications of the VECP have been approved in order to adjust to field or other conditions, payment will be limited to the total amount payable for the work at the Contract bid prices, as if the pertinent work had been constructed in accordance with the original Contract requirements. The Contractor waives the right to use such rejection or limitation of reimbursement as the basis of any claim against the State for delay damages or for any other damages or costs.
9. VECPs must meet the requirements of the specifications or standards of the Department. The standards governing the original design of the Contract will be the minimal standard allowed.
10. If additional information is needed in order for the Department to evaluate Proposals, the Contractor must provide the Department with this information within 14 calendar days of such request or within such other time period as may be approved by the Department. Failure to do so will result in rejection of the Proposal.
11. The Contractor shall provide revised Project plans, specifications and estimates to the Department in construction order format, reflecting such changes as would be required for implementation of the VECP. The Contractor shall be solely responsible for any errors or omissions resulting from such revisions.
12. Savings not directly related to the Contract, such as, but not limited to, reductions in inspection or testing costs or Department overhead, will not be included in the savings calculation for any VECP.

After the Contractor submits a conceptual Proposal, they will be notified in writing of the acceptability or the reason(s) for its rejection. The Department retains the right to reject the formal Proposal even if the conceptual Proposal was determined acceptable.

VECPs will be processed in the same manner as are alterations of the Contract that require a construction order.

VECP Submittal Requirements:

1. A statement that the Proposal is being submitted as a VECP.
2. A description of the difference between the existing Contract requirements and the proposed change(s), and the comparative advantages and disadvantages of each, taking into account considerations of service life, economy of operations, ease of maintenance, desired appearance, safety, and environmental impacts or necessary permit changes. When an item's function or characteristics would be altered by implementation of the Proposal, a justification of the anticipated effects of the alteration on the end item's performance must be included in the Proposal. A life-cycle cost analysis must be included for items involving alteration of functional characteristics. Factors for determining future worth will be provided by the Department.
3. Complete plans, specifications, and computations signed and sealed by a Professional Engineer licensed by the State of Connecticut, showing that the proposed Contract revisions would incorporate the same design criteria and restrictions that applied to the original Contract features and requirements. Said revisions shall be submitted by the Contractor in the Department's construction order format consisting of 1 paper copy of the plans and 1 electronic copy of the plans as a portable document format (PDF) file, indicating (a) quantity increases and decreases by item number, with associated cost; (b) new items, with their quantities and costs; (c) specifications in contract format; and, if needed, (d) compliance permit applications and revisions in accordance with Section 1.10.
4. A complete analysis of the probable cost effects of the proposed changes on Project construction, future operations in connection with the completed Project, maintenance and durability of completed Project construction, and other aspects of the Project, as appropriate.
5. The date by which the Proposal would have to be implemented in order for the Department to obtain the maximum cost reduction from the Proposal's implementation. The period established by the date must allow the Department ample time for review and processing of the Proposal. Should the Department find that it does not have sufficient time for such review and processing, it may reject the Proposal solely on such basis. If the Department fails to respond to the Proposal by said date, the Contractor shall consider the Proposal to be rejected and shall have no claims against the State as a result thereof.
6. A description of the effect that the implementation of the Proposal would likely have on the time required to complete the Project.

Payment for accepted VECPs:

1. The changes resulting from a VECP will be incorporated into the Contract by construction order and shall reflect the changes in existing unit bid item quantities, or any new agreed price items, cost-plus lump sum, or any combination thereof, as appropriate, in accordance with the Specifications and as determined by the Department. Any lump sum submission shall be accompanied by a schedule of payment values.
2. The Contract prices for the revised Project work will be paid directly as accomplished. In addition to such payment, the Department will pay the Contractor, under a separate item or a Value Engineering Incentive item, 50% of the total savings obtained by the State as a result of its implementation of the VECP. An estimate of said savings is to be calculated by the Department within 1 week prior to the Proposal’s acceptance, by (a) estimating what it will cost the Department to carry out the Project as revised according to the VECP; (b) estimating what it would have cost the Department to carry out the Project under the terms of the Contract as modified by any construction orders as of the time that the Department accepted the Proposal; and (c) subtracting the sum estimated as per (a) from the sum estimated as per (b).

When the implementation of the Proposal, including all related construction, has been completed, the Department will calculate the actual savings that resulted from it. The Department will then distribute half of the actual savings to the Contractor.

3. The Contractor's costs for development, design, submission and processing of the VECP are not eligible for reimbursement.
4. The Department will not reimburse the Contractor based on any cost savings not identified in the VECP prior to its acceptance.
5. The cost savings from a VECP that is exclusively time reduction shall be calculated as the number of Contract days reduced, multiplied by the amount of liquidated damages for 1 day under the Contract."

1.09.04 – Extra and Cost-Plus Work

Delete the word "bonding" under section (a) Labor, (3).

Delete existing subarticle (e) and replace with the following:

"**(e) Administrative Expense:** When extra work on a cost-plus basis is performed by an authorized subcontractor, the Department will pay the Contractor an additional 7.5% for that work; such payment will be in addition to the percentage payments described in (a), (b), (c) and (d) above, as a reimbursement for the Contractor's administrative expense in connection with such work. Approval of such additional payments will be given only after the Contractor provides to the Engineer receipted invoices for all relevant costs."

1.09.06 – Partial Payments:

In the first paragraph under **A. Monthly and Semi-monthly Estimates:**, *delete the second, third and fourth sentences and replace the remainder of subarticle (1) with the following:*

"Retainage will not be held.

Exceptions may be made as follows:

(a) When not in conflict with the interests of the State, the Contractor may request, and the Engineer may make, semi-monthly estimates for payment.
(b) If, in the judgment of the Assistant District Engineer, the Project is not proceeding in accordance with the Contract the Engineer may decline to make a payment estimate.
(c) If the total value of the Project work complete since the last estimate amounts to less than $2,500 the Engineer also may decline to make a payment estimate."

Replace the first paragraph of subarticle **B. Payment for Stored Materials:** *with the following:*

"**B. Payment for Stored Materials:** Non-perishable materials that are required for Project construction and that the Contractor has produced or purchased specifically for incorporation into the Project, but which have not yet been so incorporated, may be included in a payment estimate if

(i) the materials meet all applicable Contract specifications,

(ii) the materials have been delivered to the Project site or to another location approved by the Engineer, and

(iii) the Contractor has submitted to the Engineer, as evidence of the Contractor's purchase of the materials, either a copy of a receipted bill for same or a Certificate of Title to the materials, in the form approved by the Department, duly-executed by the Contractor and Vendor.

The Engineer will decide at what fair and appropriate fraction of the applicable Contract price such materials may be included in a payment estimate."

1.09.07 – Final Payment:

Replace the entire article with the following:

"**1.09.07 – Final Payment:** When the Commissioner has accepted the Project in accordance with Article 1.08.14, the Engineer will prepare a final payment estimate."

CONNECTICUT
SUPPLEMENTAL SPECIFICATION
SECTION 1.10
ENVIRONMENTAL COMPLIANCE

Delete the entire Section and replace it with the following:

SECTION 1.10
ENVIRONMENTAL COMPLIANCE

1.10.01—General
1.10.02—Compliance with Laws and Regulations
1.10.03—Water Pollution Control
1.10.04—Vacant
1.10.05—Construction Noise Pollution
1.10.06—Protection of Archaeological and Paleontological Remains and Materials
1.10.07—Controlled and Hazardous Materials
1.10.08—Vehicle Emissions

1.10.01—General: During and following Project construction, the Contractor shall exercise precaution and care to prevent or minimize negative effects on the environment, including the State's waters, wetlands, and other natural resources. The Contractor shall comply with all Project permits and permit applications as though the Contractor were the permittee.

The Contractor must comply with the environmental provisions specified in the Contract, and any Federal, State or municipal laws or regulations. If the Contractor fails to comply with these environmental provisions, the Contractor will be penalized as specified in this Section and elsewhere in the Contract.

1.10.02—Compliance with Laws and Regulations: The Contractor shall conduct its operations in conformance with the permit requirements established by Federal, State and municipal laws and regulations.

The Department will be responsible for obtaining all environmental permits required for Contract work. If at the time such a permit is issued, its contents differ from those described in the Contract, the permit shall govern. Should the permit be issued after the solicitation of bid proposals, and should the permit requirements significantly change the character of the work as described in the Department's Project bid documents, Contract adjustments will be made in accordance with the applicable articles in Section 1.04 herein.

The Contractor shall be responsible for, and hold the State harmless from, any penalties or fines assessed by any authority due to the Contractor's failure to comply with any term of an applicable environmental permit.

Any request by the Contractor for the Department's authorization of an activity or use of a method not specifically called for or allowed by the applicable permits issued for the Project must be submitted by the Contractor in writing to the Engineer. Such a request must include a detailed description of the proposed alternate activity or method, and must include justifications for same, along with supporting documentation,

showing that the proposed alternate activity or method will not create a risk of damage to the environment, increase the permitted wetland impact footprint, or increase fill within a floodplain. If such request is granted by the Engineer, the Department will forward to the appropriate regulatory agency or agencies any permit modification, permit revision, *de minimis* change or new permit required for the Contractor to carry out the proposed alternate activity or method in question. The Department does not, however, guarantee that it will be able to obtain such approval from the regulatory agency or agencies; and the Department will not be liable for the effects of such inability to do so.

The Contractor will not be entitled to any extension of Contract time as a result of the Engineer's granting of such a request from the Contractor. If changes to the permit are not necessary except to accommodate changes requested by the Contractor, then no claim may be made by the Contractor based on the amount of time taken by the Department to review the Contractor's request or to secure approval of related permit changes from the regulatory agency or agencies. The proposed alternate activity or method shall not commence until and unless the Engineer has approved the Contractor's request.

1.10.03—Water Pollution Control: The Contractor shall, throughout the duration of the Contract, control and abate siltation, sedimentation and pollution of all waters, including but not limited to underground water systems, inland wetlands, tidal wetlands, and coastal or navigable waters.

Construction methods proposed by the Contractor must comply with the approved permit requirements and permit applications. The Contractor shall be responsible for all obligations and costs incurred as a result of the Contractor's failure to comply with the terms and conditions of such permits or permit applications.

The following are Required Best Management Practices for prevention and control of water pollution. Provisions of the Required Best Management Practices may be superseded as specified in Article 1.05.04. The Contractor shall not make any design change in the Contract work that requires a variance from the requirements of the following items until and unless the Contractor has first submitted a detailed written proposal for such variance to the Engineer for review by the Department and for transmittal to and review by the Federal, State or municipal environmental authority, and has then received written approval from the Department of the proposed variance.

REQUIRED BEST MANAGEMENT PRACTICES

(1) Prior to commencing Project Site work, the Contractor shall submit in writing to the Engineer an “Erosion and Sedimentation Control Plan” and a “Dust Control Plan” for all Project construction stages. The Contractor shall install all control measures specified in said Plans prior to commencement of Project construction activities. The Plans shall be consistent with the Connecticut Guidelines for Soil Erosion and Sediment Control, the Connecticut Stormwater Quality Manual, and all environmental laws and regulations established by Federal, State or municipal agencies, as well as the Department's published environmental policies and standards. If the Contractor elects to work during a winter shutdown period, the Contractor shall submit to the Engineer a separate Winter Erosion and Sedimentation Control Plan, obtain the Engineer's written approval of it, and implement it before the Contractor begins Project work during the winter shut-down period.

(2) The Contractor shall inspect erosion and sedimentation controls at least

weekly, immediately after each rainfall event of at least 0.1 inch, and daily during periods of prolonged rainfall. The Contractor shall maintain all erosion and sedimentation control devices in a functional condition, in accordance with the Contract plans, relevant permits, Special Provisions, and 2002 Connecticut Guidelines for Soil Erosion and Sediment Control. In the event that the Contractor fails to maintain such devices in accordance with said documents, and the Contractor does not correct such a failure within 24 hours after receipt of written notice of such a failure from the Engineer, the Department may proceed with its own or other forces to remedy such failures. The cost to the Department of curing any such specified failure will be deducted from monies owed to the Contractor under the Contract or under any other State contract.

(3) Washout of applicators, containers, vehicles, and equipment that have been used with concrete (including bituminous concrete), paint or other such possible contaminants shall be conducted: (i) at least 50 ft from any stream, wetland or other sensitive resource; and (ii) in an entirely self-contained washout system. Such materials shall be collected and disposed of in accordance with all applicable Federal, State and municipal laws and regulations.

(4) No materials resulting from Project construction activities shall be placed in or allowed to contribute to the degradation of a wetland, watercourse or storm drainage system. Good housekeeping of the Site by the Contractor for the purpose of preventing construction-related debris or runoff from entering a regulated area is required. The Contractor shall not leave waste or debris within the travel way or roadside where it might create a safety hazard to the traveling public. The Contractor shall dispose of all construction-related materials in accordance with Federal, State and municipal laws and regulations.

(5) In accordance with CGS Section 22a-38, the Contractor shall not withdraw water from any watercourse system, except as allowed by applicable permits.

(6) The Contractor shall not dispose of any material until and unless it has proposed a location for its disposal to the Engineer and the Engineer has approved said location in writing.

If the proposed disposal location is on private property, the Contractor must include in the location proposal to the Engineer letters from the property owner and the affected municipality, agreeing to the proposed location for disposal.

The Contractor shall ensure that proposed disposal locations are outside of wetlands or watercourses, floodplains and water or natural resource areas.

(7) Before commencing any work in or adjacent to a regulated area shown on the plans, permit(s), or identified by the Engineer, the Contractor must submit in writing to the Engineer a construction-sequencing plan, a water-handling plan, and a flood contingency plan, and obtain from the Engineer written approval of said plans.

(8) When dewatering is necessary, the Contractor must not allow pumps used for same to discharge directly into a wetland or watercourse. Prior to any dewatering, the Contractor must submit to the Engineer a written proposal for specific methods and devices to be used for same, and must obtain the Engineer's written approval of such methods and devices, including, but not limited to, the pumping of water into a temporary sedimentation basin, providing surge protection at the inlet or outlet of pumps, floating the intake of a pump, or any other method for minimizing or retaining the suspended solids. If

the Engineer determines that a pumping operation is causing turbidity in a regulated area, the Contractor shall halt said operation until a means of controlling the turbidity is submitted by the Contractor in writing to the Engineer, approved in writing by the Engineer, and implemented by the Contractor.

(9) Whenever possible, work within or adjacent to watercourses shall be conducted during periods of low flow. The Engineer shall remain aware of flow conditions during the conduct of such work, and shall order such work stopped if flow conditions threaten to cause excessive erosion, siltation or turbidity. Before predicted major storms (*i.e.*, a storm predicted by NOAA Weather Service, with warnings of flooding, severe thunderstorms, or similarly severe weather conditions or effects), the Contractor shall make every effort to secure the Site to the satisfaction of the Engineer. Unless allowed by a DEEP permit, the Contractor shall store no materials and place no staging areas below the 100-year flood elevation. The Contractor shall not store below the 500-year flood level any materials which are buoyant, hazardous, flammable, explosive, soluble, expansive, radioactive, and any other materials that could be injurious to human, animal or plant life in the event of a flood.

(10) Upon completion of the associated work, the Contractor shall immediately clear all areas of all forms, false work, piling, debris or other obstructions created or caused by construction operations.

(11) If the Contractor wants to make a change in construction operations, staging or scheduling that would affect the use of or necessity for any pollution controls, the Contractor must submit to the Engineer a written proposal detailing the proposed change, and must receive the Engineer's approval of such change, before implementing it. Such submission must include a plan showing erosion and sedimentation controls above and beyond those called for in the Contract that would be necessitated by the proposed change.

(12) Dumping of oil, fuel, chemicals or other harmful materials on the ground or into a regulated area is forbidden. The Contractor shall provide to the Engineer a written Spill Prevention and Remediation Plan for the Project, outlining the Contractor's intended means of catching, retaining, and properly disposing of drained oil, removed oil filters, fuel, chemicals and other harmful material. Such plan shall also include the information and protocols needed for the remediation of, any spill that might occur on the Site, including emergency contact information. No construction activities shall commence until such a plan has been approved in writing by the Engineer.

(13) The Contractor shall restore all areas within or outside the State right-of-way that have been disturbed as a result of construction activities, in accordance with Article 1.08.11.

1.10.04—Vacant

1.10.05—Construction Noise Pollution: The Contractor shall take measures to minimize the noise caused by its construction operations, including but not limited to noise generated by equipment used for drilling, pile-driving, blasting, excavation or hauling.

All methods and devices employed to minimize noise shall be subject to the continuing approval of the Engineer. The maximum allowable level of noise at the residence or occupied building nearest to the Site shall be 90 decibels on the "A"-weighted scale (dBA). The Contractor shall halt any Project operation that violates this standard at any

time until the Contractor develops and implements a methodology that enables it to keep the noise from its Project operations below the 90-dBA limit.

1.10.06—Protection of Archaeological and Paleontological Remains and Materials: The Contractor shall be alert to the possibility that Project operations may disturb or uncover significant archaeological or paleontological resources or other such remains which in many cases are protected by Federal laws, State laws or both. Archaeological resources are minimally defined by Federal regulations as materials 50 years of age or older. They typically consist of subsurface concentrations of metal, bone, ceramic, or flaked or other shaped stone artifacts. They might also consist of *features* such as buried building foundations, linear or circular walls made of individual stones rather than concrete or cement, trash-filled pits, patches of burned earth, or distinct patterns of nearly-circular, elliptical, or squared discolorations in newly-exposed soil, accompanied by the types of *artifacts* described above.

Paleontological resources are defined as any fossilized remains, traces, or imprints of organisms, preserved in or on the earth's crust. These typically include fossilized bones, teeth, shells, eggs, or distinct impressions made in bedrock.

When archaeological or paleontological materials are inadvertently encountered, the Contractor shall immediately halt operations in the location of same and shall notify the Engineer of said discovery. The Contractor shall make every effort to preserve archaeological or paleontological materials intact in their original positions, in order to preserve the geological context and information content of the remains in relation to one another and to the enclosing soil.

The Engineer shall have the authority to suspend Project work in the area of such discovery for the purpose of preserving or recovering and documenting the archaeological or paleontological materials. The Contractor shall carry out all instructions of the Engineer for the protection of such materials, including steps to protect the site from vandalism, unauthorized investigations, accidental damage, and damage from such causes as heavy rainfall or runoff. The Contractor shall reschedule its work to minimize any loss of the time needed to complete the Project while the State evaluates, records and salvages the archaeological or paleontological materials.

Extra work ordered by the Engineer in this connection will be paid for in accordance with Articles 1.04.05 and 1.09.04. Delays caused by archaeological or paleontological preservation and protection, which the Contractor demonstrates have delayed completion of the Project, will be treated under the provisions for extension of time, Article 1.08.08.

1.10.07—Controlled and Hazardous Materials: The Department will acquire any "Hazardous Waste Generator Permit(s)" required under the Resource Conservation and Recovery Act, for the management and disposal of hazardous materials on the Site, provided that

1. such material is within the construction limits defined in the Contract, and
2. such material was not generated by the Contractor.

If the Department has designated in the Contract an area of known or suspected contamination within the Project limits, the Contractor shall dispose of such material in accordance with the relevant Special Provisions.

In the event that the Contractor encounters or exposes any material, not previously known or suspected to be contaminated, but exhibiting properties that may indicate the presence of controlled or hazardous material, the Contractor shall cease all operations in the material's vicinity and shall immediately notify the Engineer of the material's

discovery. The presence of barrels, discolored earth, metal, wood, visible fumes or smoke, abnormal odors or excessively hot earth may indicate the presence of controlled or hazardous material, and the Contractor shall treat it with extreme caution.

If controlled or hazardous materials, other than those required for Contract operations, are discovered at the Site, the Department may engage a specialty contractor to handle and dispose of the materials.

When the Contractor performs support work incidental to the removal, treatment or disposal of controlled or hazardous material, the Department will pay for same at the applicable Contract unit prices. When the Contract does not include appropriate pay items for such work, the Department will pay for it in accordance with Article 1.04.05.

The Contractor shall observe all security precautions established pursuant to 29 CFR 1910.120 and 1926.65, including all revisions and amendments thereof, and shall not work in any area known to contain or suspected of containing controlled or hazardous material without prior written approval to do so from the Engineer.

The Contractor shall assume sole responsibility for the proper storage, handling, management, and disposal of all regulated materials and wastes associated with its operations, including, but not limited to, lubricants, antifreeze, engine fluids, paints, and solvents. All costs associated with any failure by the Contractor to properly manage such materials in accordance with Federal, State and municipal regulations, and all remedial and punitive costs incurred by the Department as a result of such failure by the Contractor, shall be borne by the Contractor.

This article does not apply to coatings removed by the Contractor.

1.10.08–Vehicle Emissions: All motor vehicles and construction equipment used for the Project (both on-highway and off-road) shall comply with all Federal, State and municipal regulations concerning exhaust emission controls or safety.

The Contractor shall establish staging zones for vehicles waiting to load or unload at the Site. Such zones shall be located where the emissions from the vehicles will have minimum impact on abutting properties and the general public.

Idling of delivery trucks, dump trucks, and other equipment shall not be permitted for longer than 3 minutes during periods of non-activity, except as allowed by the Regulations of Connecticut State Agencies Section 22a-174-18(b)(3)(c):
No mobile source engine shall be allowed “to operate for more than 3 consecutive minutes when the mobile source is not in motion, except as follows:

(i) When a mobile source is forced to remain motionless because of traffic conditions or mechanical difficulties over which the operator has no control,
(ii) When it is necessary to operate defrosting, heating or cooling equipment to ensure the safety or health of the driver or passengers,
(iii) When it is necessary to operate auxiliary equipment that is located in or on the mobile source to accomplish the intended use of the mobile source,
(iv) To bring the mobile source to the manufacturer’s recommended operating temperature,
(v) When the outdoor temperature is below 20°F
(vi) When the mobile source is undergoing maintenance that requires such mobile source be operated for more than 3 consecutive minutes, or
(vii) When a mobile source is in queue to be inspected by U.S. military personnel prior to gaining access to a U.S. military installation.”

The Contractor shall conduct all of its Project work in a way that causes no harm to adjacent sensitive receptors. Sensitive receptors include but are not limited to hospitals, schools, daycare facilities, elderly housing, and convalescent facilities. The

Contractor shall see to it that any engine exhaust is not directed toward fresh air intakes, air conditioners, or windows.

Before performing extensive work within less than 50 ft of a sensitive receptor, the Contractor must (1) submit to the Engineer a Vehicle Emissions Mitigation plan, proposing detailed means for minimizing vehicle emissions from vehicles and construction equipment in the affected area, including a proposed sequence of construction; (2) obtain the Engineer's written approval of the Plan, making any revisions of same necessary to obtain said permission; and (3) implement the Plan, as it may have been revised..

Any costs associated with this “Vehicle Emissions” Article shall be included in the general cost of the Contract. In addition, there shall be no additional time granted to the Contractor for compliance with this Article. The Contractor’s compliance with this Article and any associated laws or regulations shall not be grounds for claims as outlined in Section 1.11 – “Claims”.

CONNECTICUT
SUPPLEMENTAL SPECIFICATION
SECTION 1.11
CLAIMS

Add the following Section:

SECTION 1.11
CLAIMS

1.11.01 – General
1.11.02 – Notice of Claim
1.11.03 – Record Keeping
1.11.04 – Claim Compensation
1.11.05 – Required Claim Documentation
1.11.06 – Auditing of Claims

1.11.01 – General: When filing a formal claim under Section 4-61 (referred to as "Section 4-61" below) of the C.G.S. (as revised), either as a lawsuit in the Superior Court or as a demand for arbitration, the Contractor must follow the procedures and comply with the requirements set forth in this Section of the Specifications. This Section does not, unless so specified, govern informal claims for additional compensation which the Contractor may bring before the Department. The Contractor should understand, however, that the Department may need, before the Department can resolve such a claim, the same kinds of documentation and other substantiation that it requires under this Section. It is the intent of the Department to compensate the Contractor for actual increased costs caused by or arising from acts or omissions on the part of the Department that violate legal or contractual duties owed to the Contractor by the Department.

1.11.02 – Notice of Claim: Whenever the Contractor intends to file a formal claim against the Department under Section 4-61, seeking compensation for additional costs, the Contractor shall notify the Commissioner in writing (in strict compliance with Section 4-61) of the details of said claim. Such written notice shall contain all pertinent information described in Article 1.11.05 below.

Once formal notice of a claim under C.G.S. Section 4-61 (b) (as revised) has been given to the Commissioner, the claimant may not change the claim in any way, in either concept or monetary amount, (1) without filing a new notice of claim and demand for arbitration to reflect any such change and (2) without the minimum period of six months after filing of the new demand commencing again and running before any hearing on the merits of the claim may be held. The only exception to this limitation will be for damages that continue to accrue after submission of the notice, in ways described and anticipated in the notice.

1.11.03 – Record Keeping: The Contractor shall keep daily records of all costs incurred in connection with its construction-related activities on behalf of the Department. These daily records shall identify each aspect of the Project affected by

matters related to any claim for additional compensation that the Contractor has filed, intends to file, or has reason to believe that it may file against the Department; the specific Project locations where Project work has been so affected; the number of people working on the affected aspects of the Project at the pertinent time(s); and the types and number of pieces of equipment on the Project site at the pertinent time(s). If possible, any potential or anticipated effect on the Project's progress or schedule which may result in a claim by the Contractor should also be noted contemporaneously with the cause of the effect, or as soon thereafter as possible.

1.11.04 – Claim Compensation: The payment of any claim, or any portion thereof, that is deemed valid by the Engineer shall be made in accordance with the following provisions of this Article:

(a) Compensable Items: The liability of the Department for claims will be limited to the following specifically-identified items of cost, insofar as they have not otherwise been paid for by the Department, and insofar as they were caused solely by the actions or omissions of the Department or its agents (except that with regard to payment for extra work, the Department will pay to the Contractor the mark-ups provided for in Article 1.04.05.):

(1) Additional Project-site labor expenses.
(2) Additional costs for materials.
(3) Additional, unabsorbed Project-site overhead (**e.g.**, for mobilization and demobilization).
(4) Additional costs for active equipment.
(5) For each day of Project delay or suspension caused solely by actions or omissions of the Department, either
    (i) an additional ten percent (10%) of the total amount of the costs identified in Subarticles (1) through (4) above; except that if the delay or suspension period prevented the Contractor from incurring enough Project costs under Subarticles (1) through (4) during that period to require a payment by the Department that would be greater than the payment described in subparagraph (ii) below, then the payment for affected home office overhead and profit shall instead be made in the following *per diem* amount:
    (ii) six percent (6%) of the original total Contract amount divided by the original number of days of Contract time.

Payment under either (i) or (ii) hereof shall be deemed to be complete and mutually-satisfactory compensation for any unabsorbed home office overhead and any profit related to the period of delay or suspension.

(6) Additional equipment costs. Only actual equipment costs shall be used in the calculation of any compensation to be made in response to claims for additional Project compensation. Actual equipment costs shall be based upon records kept in the normal course of business and in accordance with generally-accepted accounting principles. Under no circumstances shall Blue Book or other guide or rental rates be used for this purpose (unless the Contractor had to rent the equipment from an unrelated party, in which case the actual rental charges paid by the Contractor, so long as they are reasonable, shall be used). Idle equipment, for instance, shall be paid for based only on its actual cost to the Contractor.

(7) Subcontractor costs limited to, and determined in accordance with, Subarticles (1), (2), (3), (4), and (5) above and applicable statutory and case law. Such subcontractor costs may be paid for by the Department only (a) in the context of an informal claims settlement or (b) if the Contractor has itself paid or legally-assumed, present unconditional liability for those subcontractor costs.

(b) Non-Compensable Items: The Department will have no liability for the following specifically-identified non-compensable items:

(1) Profit, in excess of that provided for herein.
(2) Loss of anticipated profit.
(3) Loss of bidding opportunities.
(4) Reduction of bidding capacity.
(5) Home office overhead in excess of that provided for in Article 1.11.04(a)(5) hereof.
(6) Attorneys fees, claims preparation expenses, or other costs of claims proceedings or resolution.
(7) Any other consequential or indirect expenses or costs, such as tort damages, or any other form of expense or damages not provided for in these Specifications or elsewhere in the Contract.

1.11.05 – Required Claim Documentation: All claims shall be submitted in writing to the Commissioner, and shall be sufficient in detail to enable the Engineer to ascertain the basis and the amount of each claim, and to investigate and evaluate each claim in detail. As a minimum, the Contractor must provide the following information for each and every claim and sub-claim asserted:

(a) A detailed factual statement of the claim, with all dates, locations and items of work pertinent to the claim.
(b) A statement of whether each requested additional amount of compensation or extension of time is based on provisions of the Contract or on an alleged breach of the Contract. Each supporting or breached Contract provision and a statement of the reasons why each such provision supports the claim, must be specifically identified or explained.
(c) Excerpts from manuals or other texts which are standard in the industry, if available, that support the Contractor's claim.
(d) The details of the circumstances that gave rise to the claim.
(e) The date(s) on which any and all events resulting in the claim occurred, and the date(s) on which conditions resulting in the claim first became evident to the Contractor.
(f) Specific identification of any pertinent document, and detailed description of the substance of any material oral communication, relating to the substance of such claim.
(g) If an extension of time is sought, the specific dates and number of days for which it is sought, and the basis or bases for the extension sought. A critical path method, bar chart, or other type of graphical schedule that supports the extension must be submitted.
(h) When submitting any claim over $50,000, the Contractor shall certify in writing, under oath and in accordance with the formalities required by the contract, as to the following:
    (1) That supporting data is accurate and complete to the Contractors best

knowledge and belief;

(2) That the amount of the dispute and the dispute itself accurately reflects what the Contractor in good faith believes to be the Departments liability;

(3) The certification shall be executed by:

a. If the Contractor is an individual, the certification shall be executed by that individual.

b. If the Contractor is not an individual, the certification shall be executed by a senior company official in charge at the Contractor's plant or location involved or an officer or general partner of the Contractor having overall responsibility for the conduct of the Contractors affairs.

1.11.06 – Auditing of Claims: All claims filed against the Department shall be subject to audit by the Department or its agents at any time following the filing of such claim. The Contractor and its subcontractors and suppliers shall cooperate fully with the Department's auditors. Failure of the Contractor**,** its subcontractors, or its suppliers to maintain and retain sufficient records to allow the Department or its agents to fully evaluate the claim shall constitute a waiver of any portion of such claim that cannot be verified by specific, adequate, contemporaneous records, and shall bar recovery on any claim or any portion of a claim for which such verification is not produced. Without limiting the foregoing requirements, and as a minimum, the Contractor shall make available to the Department and its agents the following documents in connection with any claim that the Contractor submits:

(1) Daily time sheets and foreman's daily reports.
(2) Union agreements, if any.
(3) Insurance, welfare, and benefits records.
(4) Payroll register.
(5) Earnings records.
(6) Payroll tax returns.
(7) Records of property tax payments.
(8) Material invoices, purchase orders, and all material and supply acquisition contracts.
(9) Materials cost distribution worksheets.
(10) Equipment records (list of company equipment, rates, etc.).
(11) Vendor rental agreements
(12) Subcontractor invoices to the Contractor, and the Contractor's certificates of payments to subcontractors.
(13) Subcontractor payment certificates.
(14) Canceled checks (payroll and vendors).
(15) Job cost reports.
(16) Job payroll ledger.
(17) General ledger, general journal (if used), and all subsidiary ledgers and journals**,** together with all supporting documentation pertinent to entries made in these ledgers and journals.
(18) Cash disbursements journals.
(19) Financial statements for all years reflecting the operations on the Project.
(20) Income tax returns for all years reflecting the operations on the Project.
(21) Depreciation records on all company equipment**,** whether such records are maintained by the company involved, its accountant, or others.

(22) If a source other than depreciation records is used to develop costs for the Contractor's internal purposes in establishing the actual cost of owning and operating equipment, all such other source documents.
(23) All documents which reflect the Contractor's actual profit and overhead during the years that the Project was being performed**,** and for each of the five years prior to the commencement of the Project.
(24) All documents related to the preparation of the Contractor's bid**,** including the final calculations on which the bid was based.
(25) All documents which relate to the claim or to any sub-claim, together with all documents that support the amount of damages as to each claim or sub-claim.
(26) Worksheets used to prepare the claim, which indicate the cost components of each item of the claim, including but not limited to the pertinent costs of labor, benefits and insurance, materials, equipment, and subcontractors' damages, as well as all documents which establish the relevant time periods, individuals involved, and the Project hours and the rates for the individuals.
(27) The name, function, and pertinent activity of each Contractor's or subcontractor's official, or employee involved in or knowledgeable about events that give rise to, or facts that relate to, the claim.
(28) The amount(s) of additional compensation sought and a break-down of the amount(s) into the categories specified as payable under Article 1.11.04 above.
(29) The name, function, and pertinent activity of each Department official, employee or agent involved in or knowledgeable about events that give rise to, or facts that relate to, the claim.

CONNECTICUT
SUPPLEMENTAL SPECIFICATION
SECTION 1.20
GENERAL CLAUSES FOR FACILITIES CONSTRUCTION

Delete the entire Section and replace it with the following:

SECTION 1.20
GENERAL CLAUSES FOR FACILITIES CONSTRUCTION

SECTION 1.20—1.00
FACILITIES CONSTRUCTION - GENERAL

1.20-1.00—Facilities Construction - General

1.20-1.00—Facilities Construction - General: Facilities Construction is defined as the type of construction that requires the issuance of a Certificate of Compliance (C.O.C.) by the State Building Inspector at the completion of a Project, and includes site work considered ancillary to this type of construction.

SECTION 1.20-1.01
DEFINITION OF TERMS AND PERMISSIBLE ABBREVIATIONS FOR FACILITIES CONSTRUCTION

1.20-1.01.00—Facilities Construction - Definitions
1.20-1.01.02—Facilities Construction - Abbreviations, Publications and Standards
1.20-1.01.03—Facilities Construction - Abbreviations and Terms

1.20-1.01.01—Facilities Construction - Definitions: In these specifications, unless the context requires otherwise, words of the masculine gender include the feminine and the neuter, and, when the sense so indicates, words of the neuter gender may refer to any gender. Where appropriate, words in the singular form shall be deemed to include the plural, and words in the plural form to include the singular.

ADDENDUM: Contract revisions developed and incorporated into the contract after bid advertisement and before the opening of bid proposals.

AIR OPERATIONS AREA: Any paved or unpaved area of the airport used or intended to be used for the unobstructed movement of aircraft. These movements shall include landings, takeoffs, and surface maneuverings.

AWARD: The Department's acceptance in writing of the proposal of the lowest responsible bidder for the work, subject to the execution and approval by the Department of a contract therefor and the provision by the bidder of performance and payment bonds to secure the performance thereof which are acceptable to the Commissioner, and to such other conditions as may be specified by the Department or required by law.

BID: The submission of a proposal for the work contemplated.

BID ADVERTISEMENT: A public announcement soliciting bids for a contract for work to be performed or materials to be furnished.
BIDDER: Any individual, firm, partnership, corporation, or combination thereof, submitting a proposal for the work contemplated, acting directly or through a duly authorized representative
BID MANUAL: "The State of Connecticut Department of Transportation Construction Contract Bidding and Award Manual," copies of which are available from the Department's Division of Contracts.
CALENDAR DAY: Every day shown on the calendar, Sundays and holidays included.
CATALOG CUT (PRODUCT DATA): Document(s) with information such as manufacturer's product specifications, manufacturer's installation instructions, standard color charts, wiring diagrams showing factory-installed wiring, printed performance curves and operational range diagrams. Product data that must be specially prepared because standard printed data is not suitable shall be considered shop drawings.
CERTIFICATE OF COMPLIANCE: The formal document issued at the completion of a project by the State Building Inspector. The document is often referred to informally as a "Certificate of Occupancy," "C.O.C." or "C.O."
CHANNEL: A channel shall be interpreted to mean a natural or artificial watercourse having an average width at the bottom, after excavation, of 4 feet or more.
COMMISSIONER: State of Connecticut Transportation Commissioner acting directly or through a duly-authorized representative.
CONNECTICUT GUIDELINES FOR SOIL EROSION AND SEDIMENT CONTROL: This Department of Energy and Environmental Protection (DEEP) Bulletin is intended to provide information to government agencies and the public on soil erosion and sediment control.
http://www.ct.gov/deep/cwp/view.asp?a=2720&q=325660&deepNav_GID=1654%20
CONNECTICUT STORMWATER QUALITY MANUAL: This DEEP publication provides guidance on measures necessary to protect waters of the State from adverse impacts of post-construction stormwater runoff.
http://www.ct.gov/deep/cwp/view.asp?a=2721&q=325704&depNav_GID=1654%20-%20download
CONSTRUCTION ORDER, CHANGE ORDER: A written order signed by the Engineer for a contractor to perform work or provide supplies stipulated therein at the price or upon the basis of payment set forth therein.
CONTRACT: The agreement covering the performance of the work and the furnishing of materials required for the construction of the Project. The Contract shall be deemed to include the "Plans," "Specifications" (*i.e.*, the edition of the Department's "Standard Specifications for Roads, Bridges, Facilities and Incidental Construction" which is in effect on the date of the Bid Advertisement), "Construction Orders," and such other provisions as may be incorporated into the agreement, in addition to the contents of the bound contract containing the schedule of prices, signature sheet, addenda, special provisions, required federal and state provisions, supplemental specifications, labor and wage schedules and other such material.
CONTRACTOR: When the word is capitalized, the party of the second part to the Contract, acting directly or through its agents or employees. When this word is not

capitalized, it is to be taken in its more general sense.
CULVERT: A covered channel or a large pipe for carrying a watercourse below ground level, usually under a road or railway.
DEPARTMENT: State of Connecticut Department of Transportation.
DESIGNER: A duly-authorized representative of the Engineer, responsible for the design of the Project.
DRAINAGE DITCH: An unpaved, artificially-constructed open depression having an average width of less than 4 feet at the bottom, after excavation, constructed for the purpose of carrying off surface water.
ENGINEER: The Commissioner or Deputy Transportation Commissioner, acting directly or through a duly-authorized representative.
EXECUTION OF CONTRACT: The date of execution of the Contract by the Department is the date on which the Department's authorized signatory signs the Contract on behalf of the Department.
EQUAL: A material, device, type of equipment, or method other than what is specified in the Contract, which is a recognized equivalent in substance and function for that specified thing, taking into account warranty, performance, weight, size, visual effect, specific features and requirements indicated, quality, workmanship, economy of operation, durability, and suitability for purposes intended, provided that the proposed equivalent would not require or constitute a change in Contract work.
FIXED COSTS: Any labor, material and equipment costs directly incurred for the item or items under consideration, which are necessary for the fulfillment of Contract requirements and which remain constant regardless of the quantity of the work done.
HIGHWAY: A general term denoting a public way used for vehicular travel. When referred to in the Contract, it signifies the whole right of way reserved for or secured by the Department for use in constructing or maintaining a roadway and its appurtenances.
INSPECTOR: A duly-authorized representative of the Engineer, assigned to make inspections of the work performed and materials furnished by the Contractor.
LABORATORY: Unless another laboratory or type of laboratory is indicated, the official testing laboratory of the Department.
LIQUIDATED DAMAGES: The amount prescribed in the Contract specifications, to be paid to the State or to be deducted from any payments due or to become due the Contractor, for a specified time unit delay in completing the whole or any specified portion of the work beyond the time allowed in the Contract.
MAJOR AND MINOR ITEMS: The original Contract item of greatest cost, computed at the original Contract price and quantity, and such other original Contract items next in sequence of lower cost, computed at original Contract price and quantity, necessary to equal a total cost at the original prices and quantities of not less than 60 percent of the original aggregate Contract cost shall be considered to be a major item or major items. All other original items shall be considered to be minor items.
MAJOR LUMP SUM ITEM (MLSI): The original Contract item(s) that includes all work depicted on the Contract Plans, described in the Contract Specifications, or is otherwise required for performance and completion of the work, including mobilization and project closeout, but not including any unit price or other lump sum items listed in the Bid Proposal Form.

MANAGER OF CONTRACTS: The Transportation Manager of Contracts, who is the head of the Department's Division of Contracts, and whose office is located at the headquarters of the Department at 2800 Berlin Turnpike, Newington, CT.
MATERIAL: Any substance specified in the Contract for use in the construction of the Project, including appurtenances of products that are substantially shaped, cut, worked, mixed, finished, refined or otherwise fabricated, processed, or installed to form a part of the work.
MUNICIPALITY: City, town or county.
NOTICE TO PROCEED: A written notice issued by the Engineer to the Contractor stating the date on which the Contractor is authorized to commence and proceed with the Contract work.
OWNER: Where used herein, it is synonymous with Department or State.
PAVEMENT STRUCTURE: The combination of sub-base, base course and surface course placed on subgrade to support and distribute the traffic load.
PLANS: All drawings or reproductions of drawings supplied by the Department to the Contractor pertaining to the construction or details of the Project.
A. Standard Sheets – Standardized plans containing details approved by the Department and the FHWA, for construction of a given type on any project, included in contracts on an as-needed basis.
PRODUCT DATA (CATALOG CUT): Document(s) with information such as manufacturer's product specifications, manufacturer's installation instructions, standard color charts, wiring diagrams showing factory-installed wiring, printed performance curves and operational range diagrams. Product data that must be specially prepared because standard printed data is not suitable shall be considered shop drawings.
PROJECT: All work included under one Department contract, notwithstanding the occasional use by the Department of multiple project numbers for the work included within one contract.
PROJECT SITE (*or* SITE): The space available to the Contractor, under the Contract, for performing construction activities. The extent of the Project site is as indicated on the plans or elsewhere in the Contract.
QUALIFIED PRODUCTS LIST (QPL): A report that has been developed as a means for determining what products, suppliers, manufacturers, equipment and methodologies may be used on construction projects. This report can be located on the CT Department of Transportation Website:

http://www.ct.gov/dot/cwp/view.asp?a=1387&q=259630

RECLAIMED CONCRETE AGGREGATE: Reclaimed waste consisting of crushed and graded concrete removed from pavements, structures, or buildings. Metal may be acceptable only where it is contained as reinforcement within small fragments of concrete; *e.g.,* metal projecting from concrete fragments would be unacceptable. All such material trucked from beyond the limits of the Project must be accompanied by a materials certificate and certified test report indicating that the material is environmentally acceptable and structurally sound in accordance with Article 1.20-1.06.07, unless the source of the material is a Department Project and that source is acceptable to the Engineer.
RECLAIMED MISCELLANEOUS AGGREGATE: Glass-free and clinker-free reclaimed

waste, which has been crushed, graded and blended, as specified in the Contract, with natural crushed stone or gravel. Metal may be acceptable only where it is contained as reinforcement within small fragments of concrete; *e.g.*, metal projecting from concrete fragments would be unacceptable. All such material trucked from beyond the limits of the Project must be accompanied by a materials certificate and certified test report indicating that the material is environmentally acceptable and structurally sound in accordance with Article 1.20-1.06.07, unless the source of the material is a Department Project and that source is acceptable to the Engineer.

RECLAIMED WASTE: Debris from the demolition of buildings, structures, and pavements; residue from incineration and recycled glass. Acceptable material shall include concrete, bituminous concrete, glass, ceramics, brick, pavement sub-base and base courses, and clinker from resource recovery plants. Metal may be acceptable only when it is contained within large fragments of concrete. Reclaimed waste trucked from beyond the limits of the Project must be accompanied by a materials certificate and certified test report indicating that the waste is environmentally acceptable and structurally sound in accordance with Article 1.20-1.06.07, unless the source of the material is a Department Project and that source is acceptable to the Engineer.

RIGHT-OF-WAY: A general term denoting land, property of interest therein, usually in a strip, acquired for or devoted to transportation purposes.

ROADBED: The graded portion of a highway, including portions within the top and side slopes, which have been prepared as a foundation for the pavement structure and shoulders.

ROADWAY: The portion of the highway, including shoulders, which may be used for vehicular travel within the Project limits.

SHOP DRAWINGS: Drawings, including proposed details, diagrams, schedules, procedures and other supporting data, prepared by a Contractor to supplement the Contract documents, showing all information necessary for fabrication of items for which some specific design or detail appears in the Contract.

SHOULDER: The portion of the roadway adjacent to the traveled way, that can accommodate stopped vehicles for emergency use, and that provides lateral support of base and surface courses.

SPECIFICATIONS: The Department's written provisions and requirements for the performance of the Contract, contained in or incorporated by the Contract.

A. *Standard Specifications*—A book of specifications published and approved by the Department for general application and repetitive use, available from the Manager of Contracts and entitled the "Standard Specifications for Roads, Bridges, Facilities and Incidental Construction."
B. *Supplemental Specifications*—Approved additions to and revisions of the Standard Specifications.
C. *Special Provisions*—Other Department specifications applicable to an individual project.

STATE: State of Connecticut.

SUBCONTRACTOR: Any individual, firm, partnership or corporation to which the Contractor sublets, with the approval of the Commissioner, any part or parts of the Project covered by the Contract.

SUBSTANTIAL COMPLETION: The date at which the performance of all work on the Project has been completed except minor or incidental items, final cleanup, work required under a warranty, and repair of unacceptable work, and provided the Engineer has determined that:

A. The Project is safe and convenient for use by the public, and
B. All traffic lanes including all safety appurtenances are in their final configuration, and
C. Failure to complete the work and repairs excepted above does not result in the deterioration of other completed work, and provided further, that the value of work remaining to be performed, and cleanup is less than one percent (1%) of the estimated final Contract amount, and
D. A Certificate of Compliance has been issued.

SUBSTITUTE: A replacement for a specified material, device, type of equipment, or method, which is sufficiently different in substance and function, quality, or workmanship to constitute a change in the Contract work.

SUBSTRUCTURE: All of that part of the bridge below the bearings of simple and continuous spans, skewbacks of arches and tops of footings of rigid frames, including backwalls, wingwalls and any protective railings mounted on the wingwalls.

SUB-SUBCONTRACTOR: Any individual, firm, partnership or corporation to which a subcontractor sublets, with the approval of the Commissioner, any part or parts of the Project covered by the Contract.

SUPERSTRUCTURE: The entire bridge except the substructure.

UTILITY: Any public service company and the plant of such a company or similar facilities. Such companies may consist of, but not be limited to, companies selling or controlling the sale, distribution or use of water, gas, electricity, communications systems, sewers and railroad lines. Such facilities may consist of, but not be limited to, wires, cables, ducts, pipes, manholes, transformers, poles, towers and tracks.

WORK: The provision of labor, materials or services necessary for or relating to the design and construction of the Project.

WORKING DRAWINGS: Drawings, calculations, procedures and other supporting data prepared by a Contractor, documenting the Contractor's proposed design, details, materials, construction methods and equipment for any construction for which no specific design or detail appears in the Contract.

1.20-1.01.02—Facilities Construction - Abbreviations, Publications and Standards: Whenever one of the following abbreviations is used in the Contract, its meaning shall be interpreted as follows:

AA—(The) Aluminum Association, Inc.
AABC—Associated Air Balance Council
AAMA—American Architectural Manufacturers Association
AAPA—American Association of Port Authorities
AASHTO—American Association of State Highway and Transportation Officials: Wherever reference is made to an AASHTO Standard Method of Test or Standard Specification, it refers by letter and number to the method or specification published by AASHTO in the "Standard Specifications for Transportation Materials and Methods of

Sampling and Testing". The edition governing the work shall be in effect on the date the Contract was advertised for solicitation of bids shall govern.
ABMA—American Bearing Manufacturers Association
ACGIH—American Council of Government Industrial Hygienists
ACI—ACI International (American Concrete Institute)
ADAAG—Americans with Disabilities Act (ADA) Accessibility Guidelines for Buildings and Facilities
ADSC—The International Association of Foundation Drilling (formerly Association of Drilled Shaft
Contractors)
AF&PA—American Forest & Paper Association
AGA—American Gas Association
AGC—(The) Associated General Contractors of America
AHA—American Hardboard Association
AHAM—Association of Home Appliance Manufacturers
AI—Asphalt Institute
AIA—(The) American Institute of Architects
AISC—American Institute of Steel Construction
AISI—American Iron and Steel Institute
AITC—American Institute of Timber Construction
A.L.I.—Automotive Lift Institute
ALSC—American Lumber Standard Committee, Incorporated
AMCA—Air Movement and Control Association International, Inc.
AMRL—AASHTO Materials Reference Library
ANLA—American Nursery and Landscape Association
ANSI—American National Standards Institute
AOAC—AOAC International
AOSA—Association of Official Seed Analysts
APA—APA-The Engineered Wood Association
API—American Petroleum Institute
AREMA—American Railway Engineering and Maintenance-of-Way Association
ARI—Air-Conditioning & Refrigeration Institute
ARTBA—American Road and Transportation Builders Association
ASA—Acoustical Society of America
ASC—Adhesive and Sealant Council
ASCE—American Society of Civil Engineers
ASHRAE—American Society of Heating, Refrigerating and Air-Conditioning Engineers
ASME—ASME International (The American Society of Mechanical Engineers International)
ASNT—American Society for Non-Destructive Testing
ASSE—American Society of Sanitary Engineering
ASTM—American Society of Testing and Materials (ASTM International): Wherever reference is made to an ASTM specification, test method, or practice, it refers by letter, number, or both to standards published by ASTM International in the "ASTM Standards Source™ Database". The edition governing the work shall be in effect on the date the

Contract was advertised for solicitation of bids shall govern.
ATSSA—American Traffic Safety Services Association
AWI—Architectural Woodwork Institute
AWPA—American Wood-Preservers' Association
AWPI—American Wood Preservers Institute
AWS—American Welding Society: Wherever reference is made to an AWS materials specification, inspection methods, or welding procedures, it refers by section number to standards of the American Welding Society published in the applicable steel, or aluminum welding code. The edition governing the work shall be in effect on the date the Contract was advertised for solicitation of bids shall govern.
AWWA—American Water Works Association
BHMA—Builders Hardware Manufacturers Association
BIA—(The) Brick Industry Association
CBM—Certified Ballast Manufacturers Association
CCRL—Cement and Concrete Reference Laboratory
CDA—Copper Development Association (The)
CGA—Compressed Gas Association
CISCA—Ceilings and Interior Systems Construction Association
CLFMI—Chain Link Fence Manufacturers Institute
ConnDOT—Connecticut Department of Transportation
CFR—Code of Federal Regulations
CGS—Connecticut General Statutes (as revised)
CISPI—Cast Iron Soil Pipe Institute
CRI—(The) Carpet and Rug Institute
CRSI—Concrete Reinforcing Steel Institute
CSI—(The) Construction Specifications Institute
CSSB—Cedar Shake & Shingle Bureau
CTI—Cooling Technology Institute
DASMA—Door and Access Systems Manufacturers Association, International
DEEP—Connecticut Department of Energy and Environmental Protection
DHI—Door and Hardware Institute
DOD—Department of Defense Military Specifications and Standards
EIA—Electronic Industries Alliance
EPA—Environmental Protection Agency
FAA—Federal Aviation Administration
FCC—Federal Communications Commission
FCICA—Floor Covering Installation Contractors Association
FHWA—Federal Highway Administration
FMG—FM Global
FRA—Federal Railway Administration
FS—Wherever reference is made to FS in the contract, it refers by number, letter, or both, to the latest standard or tentative standard of the Federal Specification Unit, General Services Administration, Federal Supply Service, as to materials, specifications, or methods of testing, whichever the case may be.
FTA—Federal Transit Administration

GA—Gypsum Association
GANA—Glass Association of North America
GSA—General Services Administration
HI—Hydraulics Institute
HPVA—Hardwood Plywood & Veneer Association
ICC—International Code Council
ICC-ES—ICC Evaluation Service, Inc.
ICEA—Insulated Cable Engineers Association, Inc.
IEC—International Electrotechnical Commission
IEEE—(The) Institute of Electrical and Electronics Engineers, Inc.
IES—Illuminating Engineers Society
IESNA—Illuminating Engineering Society of North America
IGCC—Insulating Glass Certification Council
IGMA—Insulating Glass Manufacturers Alliance
IMSA—International Municipal Signal Association
IRI—HSB Industrial Risk Insurers
ISO—International Organization for Standardization
ITE—Institute of Traffic Engineers
KCMA—Kitchen Cabinet Manufacturers Association
LMA—Laminating Materials Association
LPI—Lightning Protection Institute
MASH—Manual for Assessing Safety Hardware
MBMA—Metal Building Manufacturers Association
MILSPEC—Military Specification and Standards
MMA—Monorail Manufacturers Association
MSHA—Mine Safety and Health Administration
MSS—Manufacturers Standardization Society of The Valve and Fittings Industry, Inc.
MUTCD—Manual on Uniform Traffic Control Devices
NAAMM—National Association of Architectural Metal Manufacturers
NADCA—National Air Duct Cleaners Association
NAIMA—(The) North American Insulation Manufacturers Association
NBFU—National Board of Fire Underwriters
NCHRP—National Cooperative Highway Research Program
NCMA—National Concrete Masonry Association
NCPI—National Clay Pipe Institute
NEBB—Natural Environmental Balancing Bureau
NEC—National Electrical Code
NECA—National Electrical Contractors Association
NEMA—National Electrical Manufacturers Association
NEPCOAT—North East Protective Coatings Committee
NESC—National Electrical Safety Code
NETA—InterNational Testing Association
NETTCP—NorthEast Transportation Technician Certification Program
NFPA—National Fire Protection Association
NFRC—National Fenestration Rating Council

NHLA—National Hardwood Lumber Association
NICET—National Institute for Certification in Engineering Technologies
NIOSH—National Institute of Occupational Safety and Health
NIST—National Institute of Standards and Technology
NLGA—National Lumber Grades Authority
NOAA—National Oceanic and Atmospheric Administration
NRCA—National Roofing Contractors Association
NSF—NSF International
NTMA—National Terrazzo and Mosaic Association, Inc.
OEO—Office of Equal Opportunity
OSHA—Occupational Safety and Health Administration
PCA—Portland Cement Association
PCI—Precast/Prestressed Concrete Institute
PDI—Plumbing & Drainage Institute
PTI—Post-Tensioning Institute
PURA—Public Utilities Regulatory Authority
RFCI—Resilient Floor Covering Institute
RMA—Rubber Manufacturers Association
SAE—SAE International (formerly Society of Automotive Engineers)
SDI—Steel Deck Institute *or* Steel Door Institute
SFPA—Southern Forest Products Association
SHRP—Strategic Highway Research Program
SJI—Steel Joist Institute
SMACNA—Sheet Metal and Air Conditioning Contractors National Association
SPIB—(The) Southern Pine Inspection Bureau
SPRI—Single Ply Roofing Institute SSPC—Where reference is made to SSPC in the Contract, it refers by number, letter, or both, to the latest standard or tentative standard specification of The Society for Protective Coatings, Formerly the Steel Structures Painting Council, as to materials specifications, methods of testing, systems, procedures, inspection or other specification pertaining to any or all phases of cleaning or painting, whichever may apply.
SWRI—Sealant, Waterproofing, & Restoration Institute
TCA—Tile Council of America, Inc.
TIA—Telecommunications Industry Association
TIA/EIA—Telecommunications Industry Association/Electronics Industries Alliance
TPI—Truss Plate Institute, Inc.
TRB—Transportation Research Board
UFAS—Uniform Federal Accessibility Standards
UL—Underwriters Laboratories Inc.
USDA—United States Department of Agriculture
USGBC—U.S. Green Building Council
WCLIB—West Coast Lumber Inspection Bureau
WCSC—Window Covering Safety Council
WDMA—Window & Door Manufacturers Association
WWPA—Western Wood Products Association

1.20-1.01.03—Abbreviations and Terms: Abbreviations and terms used in the Contract are in lieu of and are to be construed in the same way as are the terms or phrases following them in the list below. Those abbreviations and terms include, but are not necessarily limited to:

ABS—acrylonitrile butadiene styrene
AC—alternating current
ACCM Pipe or ACCMP—Asphalt-Coated Corrugated Metal Pipe
ACSR—Aluminum Conductor, Steel Reinforced
AIC—Ampere Interrupting Current
AOEC—Area of Environmental Concern
APA—Aquifer Protection Area
AWG—American Wire Gauge
B & B—balled and burlapped
bbl—barrel
BCPC—Bituminous Concrete Park Curbing
Bit.—bituminous
Bit. Conc.—bituminous concrete
CAS—Coating Applicator Specialist
CB—catch basin
CCM Pipe or CCMP—coated corrugated metal pipe
CICU—controller interface communications unit1
CLLCU—closed loop local coordination unit
CLMU—closed loop master unit
CMS—Changeable Message Sign
Conc.—concrete
CPE Pipe or CPEP—corrugated plastic or polyethylene pipe
CPS—centipoise second
CWI— Certified Welding Inspector
cwt.—hundredweight or 100 pounds
DC—direct current
dist.—distillation
DMT—Division of Materials Testing
DTI—Direct Tension Indicator
EW—endwall
est.—estimated
exc—excavation
fi—jacking tension
FRC—Fiberglass Reinforced Composite
f’ c—specified minimum compressive strength at a specified age
f' ci—required strength at time of transfer
ga—gauge or gage
Gsa—Apparent specific gravity
Gsb—Bulk specific gravity
HASP—Health and Safety Plan
HMA—hot mix asphalt or bituminous concrete

JMF—job mix formula
kip—1000 pounds
ksf—kips per square foot
LED—light-emitting diode
l.s.—lump sum
mbf—1000-foot board measure
MBR—metal beam rail
Mgal—1000 gallons
MH—manhole
MSDS—Material Safety Data Sheet(s)
MPT—Maintenance and Protection of Traffic
N.C.—National Coarse
NDT—non-destructive testing
Pavt.—pavement
PCBC—precast concrete barrier curb
PCC—Portland Cement Concrete
PE—polyethylene
Perf. ACCM Pipe or Perf. ACCMP—Perforated Asphalt-Coated Corrugated Metal Pipe
Perf. CCM Pipe or Perf. CCMP—Perforated Coated Corrugated Metal Pipe
Perf. CPE Pipe or Perf. CPEP—Perforated Corrugated Plastic or Polyethylene Pipe
pfmd.—preformed
PROM—programmable read only memory
psf—pounds per square foot
psi—pounds per square inch
p/s—prestressed
PVC—polyvinyl chloride
Pwa—Percent water absorbed
RAP—reclaimed asphalt pavement
RC—Reinforced Concrete
RCCE—Reinforced Concrete Culvert End
RC Pipe *or* RCP—Reinforced Concrete Pipe
SD—system detector
sec.—second
sol.—soluble
sp. gr.—specific gravity
sp. visc.—specific viscosity
SSA—Sole Source Aquifer
std.—standard
surf.—surface
TDC—Transportation Division Chief
THHN—Heat resistant thermoplastic, insulated nylon jacket, 90 degrees Centigrade, 600 volt building wire
THWN—Moisture and heat resistant thermoplastic, insulated nylon jacket, 75 degrees Centigrade, 600 volt building wire
TL—Test Level

TMA—Truck Mounted Impact Attenuator
TMP—Transportation Management Plan
tsf—tons per square foot
TTC—Temporary Traffic Control
U'drain *or* Udrain—Underdrain
UTCS—urban traffic control system
UV—ultra-violet or ultra violet light
VAC—Volts Alternating Current
VMS—Variable Message Sign
VOC—Volatile Organic Compound
VT—vitrified tile
W—watt
WSA—Temporary Waste Stockpile Area

SECTION 1.20-1.02
PROPOSAL REQUIREMENTS AND CONDITIONS FOR FACILITIES CONSTRUCTION

1.20-1.02.01—Facilities Construction - Contract Bidding and Award
1.20-1.02.02—Facilities Construction - Vacant
1.20-1.02.03—Facilities Construction - Interpretation of Estimate
1.20-1.02.04—Facilities Construction - Examination of Plans, Specifications, Special Provisions and Site of Work
1.20-1.02.05—Facilities Construction - Vacant
1.20-1.02.06—Facilities Construction - Vacant
1.20-1.02.07—Facilities Construction - Vacant
1.20-1.02.08—Facilities Construction - Vacant
1.20-1.02.09—Facilities Construction - Vacant
1.20-1.02.10—Facilities Construction - Vacant
1.20-1.02.11—Facilities Construction - Vacant
1.20-1.02.12—Facilities Construction - Vacant
1.20-1.02.13—Facilities Construction - Knowledge of Applicable Laws
1.20-1.02.14—Facilities Construction - Vacant
1.20-1.02.15—Facilities Construction - Vacant

1.20-1.02.01—Facilities Construction – Contract Bidding and Award: All bids for construction contracts must be submitted electronically. It is the responsibility of each bidder and all other interested parties to obtain all bidding related information and documents from the Department of Administrative Services (DAS) State Contracting Portal.

Connecticut Department of Transportation bidding and other information and documents which are obtained from any other source must not be submitted to the Department. Reproduced, reformatted or altered forms of documents are not authorized or acceptable.

For information about the bidding and award of Department construction contracts, consult the “State of Connecticut Department of Transportation Construction Contract

Bidding and Award Manual," available from the Division of Contracts. In order to be eligible for award of a Department construction contract, a bidder must follow the requirements of this Bid Manual, and all bidding and award matters regarding Department construction contracts shall be governed by the terms of the Bid Manual, unless treated otherwise in the Contract, including these Specifications.

1.20-1.02.02—Facilities Construction - Vacant

1.20-1.02.03—Facilities Construction - Interpretation of Estimate: The quantities shown on the proposal form are approximate only and are given as a basis for the pricing upon which the award of the Contract will be made. The Department does not warrant that these quantities shall remain unchanged in the actual construction, and the Contractor may not plead misunderstanding or deception because of any variation between estimated and final quantities. The Engineer reserves the right to increase or decrease any or all of the quantities shown on the proposal form as may be necessary to properly complete the Project.

The Department will pay for the actual quantity of authorized and accepted work done or material furnished under each of the items.

1.20-1.02.04—Facilities Construction - Examination of Plans, Specifications, Special Provisions and Site of Work: The bidder is required to examine carefully the site of the Contract work and the proposal form, plans, special provisions, specifications, supplemental specifications, Contract form and other Contract documents for the work contemplated, as well as any permits or permit applications that are likely to affect the Contract work. The bidder must judge for itself and satisfy itself as to the conditions to be encountered; the character, quality and quantities of the work to be performed; the materials to be furnished; and the requirements of the above documents, particularly the requirements under each Contract item, under the general cost of the work, or under other applicable, but more general, provisions, of the Contract.

The subsurface information furnished in the Contract is based on the interpretation, by the Department, of investigations made only at the specific locations indicated; and the Department gives no assurance that the conditions discovered are typical of the conditions at other Project site locations or that those conditions will have remained unchanged since the field data were obtained. The Department also gives no assurance that the presence or absence of subsurface water at the time and locations of these explorations will be representative of actual conditions at the time of construction. Such subsurface information as was obtained by the Department for its use in the design of the Project will be available for inspection by bidders through the Division of Contracts. Also, bidders may arrange through the Division of Contracts an opportunity to examine, in advance of bidding, at a location to be specified by the Department, any available samples of the materials encountered in the Department's subsurface explorations. The Contractor shall be solely responsible for all assumptions, deductions, or conclusions it may make or derive from its examination of any

Department subsurface information, document or sample. In furnishing or making available such information, the Department makes no warranty or representation as to the actual conditions that may be encountered or actual quantities or distribution of quantities of work that will be required in the course of the Project.

The Department does not intend or warrant that plan sheets furnished to the State by utility companies whose facilities may be affected by the proposed construction will show all proposed utility work that will be done by utility companies or municipal authorities or both before, during, or after the life of this Contract. In addition to the work indicated on such plan sheets, the utility companies and authorities may make adjustments to or remove certain of their installations other than those indicated on the plans, or may install facilities not so indicated.

Bidders must inform the Department in writing, at the earliest opportunity, of any and all omissions, errors, and/or discrepancies that the bidder discovers within or among the plans, specifications, and bidding documents. Information and inquiries concerning such matters, and any other information or inquiry concerning the conditions of bidding or award or the interpretation of contract documents, must be transmitted in writing to the Manager of Contracts, Connecticut Department of Transportation, P. O. Box 317546, Newington, Connecticut 06131-7546. The Department cannot ensure a response to inquiries received later than ten (10) days prior to the scheduled opening of the related bid. When the Department deems it warranted, responses to such inquiries that relate to changes in or interpretations of the Project documents (plans and specifications) will be issued to all bidders in the form of addenda and made a part of the Contract. Bidders are responsible for ensuring that they are aware of all addenda. Failure by the Department or postal or other courier services to deliver addenda or other information regarding a Contract being bid does not release the bidder from any obligations under said addenda or the conditions of the bid.

CSI-formatted specifications are organized into Divisions and Sections based on the CSI's "MasterFormat" numbering system. CSI-formatted specifications use certain conventions for the style of language and the intended meaning of certain terms, words, and phrases when used in particular situations. These conventions are as follows:

(a) Language used is abbreviated. Words and meanings shall be interpreted as appropriate. Words implied, but not stated, shall be interpreted as the sense requires. Singular words shall be interpreted as plural and plural words shall be interpreted as singular where applicable as the context indicates.

(b) Imperative mood and streamlined language are generally used. Requirements expressed in the imperative mood are to be performed by the Contractor. Subjective language is used for clarity to describe responsibilities that must be fulfilled indirectly by the Contractor or by others when so noted.

(c) The words "shall," "shall be," or "shall comply with" are implied where a colon (:) is used within a sentence or phrase.

1.20-1.02.05—Facilities Construction - Vacant

1.20-1.02.06—Facilities Construction - Vacant

1.20-1.02.07—Facilities Construction - Vacant

1.20-1.02.08—Facilities Construction - Vacant

1.20-1.02.09—Facilities Construction - Vacant

1.20-1.02.10—Facilities Construction - Vacant

1.20-1.02.11—Facilities Construction - Vacant

1.20-1.02.12—Facilities Construction - Vacant

1.20-1.02.13—Facilities Construction - Knowledge of Applicable Laws: Bidders shall be deemed to know and understand all federal, state and local laws, ordinances and regulations and municipal bylaws which in any manner apply to projects for which they bid; such legal requirements shall include, but not necessarily be limited to, those which apply to the conduct of the Contract work, the equipment and materials to be used on the Project, or the treatment of individuals or classes of individuals in relationship to their involvement with the Project. A Contractor's ignorance of such requirements shall not, in any internal Department proceeding or in any claims or other legal proceeding, constitute justification for the Contractor's failure to consider such requirements in formulating a bid proposal, or for the Contractor's failure to ensure that such legal requirements are met with regard to any Department project in which that Contractor participates.

The Contractor agrees that if it should be awarded the contract for any project supported at least in part by federal funding, the Contractor will not knowingly enter into any lower-tier transaction on that project with a person (including entities) who, by virtue of federal law or regulation, or by voluntary agreement, is currently ineligible to participate in such a project, unless after disclosure of such ineligibility, such participation is authorized by appropriate federal and State authorities.

The Department expects the Contractor to obey municipal laws and regulations and cooperate with municipal officials. In some instances, however, municipal laws or regulations, or the orders of municipal officials, may conflict with necessary Project activities. In most such cases, the municipality does not have the legal power to enforce its laws and regulations upon the State or upon a State project. This is because the State is protected by its sovereign immunity. If local police or other authorities should attempt to stop the Contractor from carrying out activities that are necessary in order for the Contractor to comply with Contract requirements, the Contractor should politely inform the municipal authorities that they probably do not have jurisdiction over the State’s project, and the Contractor should immediately inform the Engineer of the attempted interference with Project activities. If the municipal authorities continue to insist upon preventing the Contractor from carrying out Project activities, the Contractor should not defy the authorities, but, to the extent possible, should await directions from the Engineer.

All work to be performed by the Contractor shall comply with, as a minimum, the State Building Code as adopted pursuant to CGS 29-252, as amended; the State Fire Prevention Code as adopted pursuant to CGS 29-291a, as amended; and the Fire Safety Code as adopted pursuant to CGS 29-292, as amended.

The State Building Code, including latest Connecticut Supplements and Amendments, includes the following:

1. The 2012 International Building Code.
2. The 2012 International Plumbing Code.
3. The 2012 International Mechanical Code.
4. The 2012 International Existing Building Code.
5. The 2012 International Energy Conservation Code.
6. The 2012 NFPA 70 National Electrical Code.
7. The 2012 ICC/ANSI A117.1.

The State Fire Safety Code, including latest Connecticut Supplements and Amendments, includes the following:

1. The 2012 International Fire Code.
2. The 2012 NFPA 101 Life Safety Code.

The State Fire Prevention Code, including latest Connecticut Supplements and Amendments, includes the following:

1. The 2012 NFPA 1. Uniform Fire Code

The edition of the code governing the Project shall be the code which is in effect as per the above CGS Sections on the date that the Contract is advertised for solicitation of bids.

All work to be performed by the Contractor shall comply with the 2010 Department of Justice “ADA Standards for Accessible Design.”

1.20-1.02.14—Facilities Construction - Vacant

1.20-1.02.15—Facilities Construction - Vacant

SECTION 1.20-1.03
AWARD AND EXECUTION OF CONTRACT FOR FACILITIES CONSTRUCTION

1.20-1.03.01—Facilities Construction - Consideration of Bids
1.20-1.03.02—Facilities Construction - Award and Execution of Contract
1.20-1.03.03—Facilities Construction - Return of Proposal Guaranty
1.20-1.03.04—Facilities Construction - Requirements of Performance Contract Bond and Payment Bond
1.20-1.03.05—Facilities Construction - Vacant
1.20-1.03.06—Facilities Construction - Failure to Execute Contract
1.20-1.03.07—Facilities Construction - Insurance
1.20-1.03.08—Facilities Construction - Notice to Proceed and Commencement of Work

1.20-1.03.01—Facilities Construction - Consideration of Bids: See Article 1.20-1.02.01.

The apparent low bidder shall submit to the Manager of Contracts a Schedule of Values within 14 calendar days after bid opening. Any other Contractor that the Department may subsequently designate as the apparent lowest bidder shall make the aforesaid submission within 14 calendar days from the date on which the Department notifies said Contractor that it has become the apparent lowest bidder. If, however, the Department deems it necessary for such a subsequently designated Contractor to make said submission within a shorter period of time, the Contractor shall make the submission within the time designated by the Department.

The total in the Schedule of Values shall equal the bid dollar amount for the MLSI.

The Schedule of Values shall be divided into "Line Items" listed separately for each CSI Section of the Special Provisions. An additional line item for "Mobilization" may be incorporated into the Schedule of Values; however, this item may not exceed 7.5% of the value of the MLSI. The "Mobilization" line item will also include costs associated with "General Conditions," "Insurance/Bonding," and "Project Superintendent." An additional line item for "Project Closeout" shall be incorporated into the Schedule of Values; however, this item must be at least 2.5% of the value of the MLSI. Where requested by the Department, the Contractor shall breakdown the line items further into more specific line items.

In the event that this Contract is terminated or a portion of this Contract is deleted for any reason or in any way allowable by law under this Contract after the apparent low bidder has been awarded the Contract, the Schedule of Values will not be used for estimating payment due the Contractor for work completed prior to such termination of the Contract or deletion of work thereunder. In the case of Contract termination, payment shall be made in accordance with Article 1.20-1.05.14.

1.20-1.03.02—Facilities Construction - Award and Execution of Contract: Except as otherwise authorized by the Commissioner, all contracts will be awarded and executed in accordance with the order of the Commissioner. The award, if made, will be made within 60 days after the opening of the proposals unless otherwise agreed upon by the Commissioner, the successful bidder, and the surety. The successful bidder, upon receipt of notice from the Department that the contract is ready for execution, shall, at the time and place designated in said notice, be present in person or be represented by an official legally authorized to sign the Contract, and shall there and then sign the necessary Project contract with the State. No proposal shall be considered binding upon the State until the proper execution of the Contract by both parties.

1.20-1.03.03—Facilities Construction - Return of Proposal Guaranty: All proposal guaranties will be returned within 3 calendar days following the award of the Contract. Ten calendar days after the opening of the proposals, all guaranties, except those of the 3 lowest bidders, will be returned. Should no award be made within 60 calendar days after the opening of proposals, the Commissioner may reject all proposals and return

the proposal guaranties, except that with the approval of the lowest bidder and its surety, the Commissioner may extend the time for the award and may retain the proposal and proposal guaranty of the lowest bidder for said extended time, or for any other period of time agreed upon by the Commissioner, bidder and surety.

1.20-1.03.04—Facilities Construction - Requirements of Performance Contract Bond and Payment Bond: See Article 1.20-1.02.01.

In conformance with Section 49-41a of the Connecticut General Statutes, as revised, the Contractor (1) shall, within 30 days after any given Contract payment to the Contractor by the State, pay any amounts due any subcontractor, whether for labor performed or materials furnished, when charges for such labor or materials have been included in a payment estimate paid by the State; (2) and shall include in each of its subcontracts a provision requiring each subcontractor to pay any amounts due any of its subcontractors on the Project, whether for labor performed or materials furnished, within 30 days after such subcontractor receives a payment from the Contractor which encompasses labor or materials furnished by such subcontractor for the Project.

If the Contractor believes that it has a valid reason for withholding payment for particular work or materials from a subcontractor or supplier, then the Contractor, within 30 days of receiving payment from the State for that work or materials, shall notify the subcontractor or supplier and the Department of its reasons for withholding payment.

1.20.1.03.05—Facilities Construction - Vacant

1.20-1.03.06—Facilities Construction - Failure to Execute Contract: See Article 1.20-1.02.01.

1.20-1.03.07—Facilities Construction - Insurance:

Coverage shall be on a primary basis.

The Contractor shall carry and maintain at all times during the term of the Contract the insurance coverages required by this Article and any additional coverages(s) or higher minimum insurance coverage amount(s) required by the Special Provisions of the Contract.

If the Project includes work on or adjacent to railroad property additional insurance may be required as specified by the railroad. Please refer to the Special Provisions for any additional insurance requirements by the railroad.

1. Worker's Compensation Insurance: With respect to all operations the Contractor performs and all those performed for it by subcontractors, the Contractor shall carry, and require each subcontractor to carry, Workers' Compensation insurance as required by the laws of the State of Connecticut.

Employer's Liability insurance shall be provided in amounts not less than $100,000 per accident for bodily injury by accident; $100,000 policy limit by disease and $100,000 per employee for bodily injury by disease. Each Workers' Compensation policy shall contain the U.S. Longshoreman's and Harbor Workers' Act endorsement when work is to be performed over or adjacent to navigable water.

2. Commercial General Liability Insurance: With respect to the operations the

Contractor performs and also those performed for it by subcontractors, the Contractor shall carry, and require each subcontractor to carry, Commercial General Liability insurance, including Contractual Liability, Products and Completed Operations, Broad Form Property Damage and Independent Contractors.

Products and completed operations insurance for ongoing and completed operations shall be maintained for a period of one (1) year after the acceptance of the project by the Department in accordance with Article 1.20-1.08.14. See chart below for applicable minimum coverage amounts.

Contract Amount ($)	Minimum Single Occurrence Amount ($)	Minimum Annual Aggregate Amount ($)
0-2,000,000	1,000,000	2,000,000
>2,000,001-10,000,000	2,000,000	4,000,000
>10,000,000	4,000,000	8,000,000

Each policy shall have coverage for and exclusions removed for "Explosion, Collapse and Underground" ("XCU") if underground work is to be undertaken.

3. Automobile Liability Insurance: The Contractor shall obtain automobile liability insurance covering the operation of all motor vehicles, including those hired or borrowed, that are used in connection with the Project for all damages arising out of: (1) bodily injury to or death of all persons and/or (2) injury to or destruction of property; in any one accident or occurrence. This policy shall not be subject to an annual aggregate limitation. See chart above for applicable minimum coverage amounts.

4. Owner's and Contractor's Protective Liability Insurance for and in the Name of the State: With respect to the Contractor's Project operations and also those of its subcontractors, the Contractor shall carry, for and on behalf of the State for each accident or occurrence resulting in damages from (1) bodily injury to or death of persons and/or (2) injury to or destruction of property. See chart below for applicable minimum coverage amounts.

Contract Amount ($)	Minimum Single Occurrence Amount ($)	Minimum Annual Aggregate Amount ($)
0 - 20 Million	1,000,000	1,000,000
20 Million - 50 Million	2,000,000	2,000,000
> 50 Million	4,000,000	4,000,000

5. Railroad Protective Liability Insurance: When the Contract involves work within fifty (50) feet of the railroad right-of-way or State-owned rail property, with respect to Project operations and also those of its subcontractors, the Contractor shall carry Railroad Protective Liability Insurance providing coverage of at least $2,000,000 for each accident or occurrence resulting in damages from

(1) bodily injury to or death of all persons and
(2) injury to or destruction of property, and subject to that limit per accident or

occurrence, an aggregate coverage of at least $6,000,000 for all damages during the policy period, and with all entities falling within any of the following listed categories named as insured parties:

(i) the owner of the railroad right-of-way,

(ii) the owner of any railcar licensed or permitted to travel within that affected portion of railroad right-of-way, and

(iii) the operator of any railcar licensed or permitted to travel within that affected portion of the railroad right-of-way, and with the State, if not falling within any of the above-listed categories, also named as an insured party.

6. Blasting: When explosives are to be used in the Project, the Commercial General Liability insurance policy shall include XCU coverage, in the same limits as the per occurrence policy limits.

7. Protection and Indemnity Insurance for Marine Construction Operations in Navigable Waters:

If a vessel of any kind will be involved in Project work, the Contractor shall obtain the following additional insurance.

coverage:

A. Protection and Indemnity Coverage of at least $300,000 per vessel or equal to at least the value of hull and machinery, whichever is greater.

B. If there is any limitation or exclusion with regard to crew and employees under the protection and indemnity form, the Contractor must obtain and keep in effect throughout the Project a workers' compensation policy, including coverage for operations under admiralty jurisdiction, with a limit of liability of at least $300,000 per accident or a limit equal to at least the value of the hull and machinery, whichever is greater, or for any amount otherwise required by statute.

8. Builder's Risk Insurance: The Contractor shall maintain comprehensive replacement cost builder's risk (completed value) insurance providing coverage for the entire work at the Project site, including all fixtures, machinery and equipment, any heating, cooling and constituting a permanent part of the building and shall cover portions of work located away from the site, but intended for use at the site. If it is determined that all or a portion of the project is located within an area designated as a Special Flood Hazard Area, the Contractor shall maintain flood insurance (no less than $10,000,000 sublimit). The State of Connecticut shall be named as Loss Payee. Equipment breakdown coverage may be sub limited to 50% of the project cost.

9. Architects and Engineer's Professional Liability Insurance for Structural Engineer: If required, limits will be specified in Article 1.20-1.03.07 of the Special Provisions of the Contract or Article 1.20-1.05.02.

10. Umbrella Liability Insurance: The Contractor may satisfy the minimum limits required for Commercial General Liability and Automobile Liability Insurance using Umbrella Liability Insurance. In the event that the Contractor obtains Umbrella Liability Insurance to meet the minimum coverage requirements for Commercial General Liability or Automobile Liability Insurance coverage, the Umbrella Liability Insurance policy shall have an annual aggregate at a limit not less than twice the single occurrence and must specifically endorse the State of Connecticut as an additional insured. Specifically for Bridge Projects with a low bid equal to or higher than

$80,000,000, the Umbrella Liability Insurance policy must have a minimum limit of at least $25,000,000.

11. Certificate of Insurance: Before the Contract is executed, the Contractor must provide to the Department a certificate of insurance acceptable to the Commissioner and executed by an insurance company or companies satisfactory to the State of Connecticut for the insurance coverage(s) required by this Article and the Special Provisions of the Contract. The Contractor shall maintain the required insurance coverage during the entire term of the Contract. The certificate of insurance must clearly include the name of the insured and identify the project for which it is being issued.

12. Copies of Policies: The Contractor shall provide, within five (5) business days, a copy or copies of all applicable insurance policies when requested by the State. In providing said policies, the Contractor may redact provisions of the policy that are proprietary. This provision shall survive the expiration or termination of the Contract.

13. **Sovereign Immunity:** The Contractor may not assert the defense of sovereign immunity in the adjustment of claims or in the defense of any claim or suit brought against the Contractor or the State, unless the State, in writing, requests that the Contractor do so or consents to its doing.

14. Contractor Assumes Costs: The Contractor shall assume and pay all costs and billings for premiums, deductibles, self-insured retentions and audit charges earned and payable under the required insurance.

15. State Named as Additional Insured: The State must be named as an additional insured party for the Commercial General Liability and Automobile Liability insurance policies required by this Article and the Special Provisions to the Contract, and any Umbrella Liability Insurance, as applicable, obtained in accordance with this Article. Each policy shall waive right of recovery (waiver of subrogation) against the State of Connecticut.

16. Termination or Change of Insurance:

A. The Contractor shall notify the Department of any cancelation of insurance carrier or change to the required insurance coverage by submitting a new insurance certificate to the Department immediately following said cancelation or change in required coverage.

B. It is the responsibility of the Contractor to maintain evidence of a current insurance coverage with the Department for the duration of contract. It is the responsibility of the Contractor to file with the Department all renewals and new certificates of insurance issued due to changes in policy terms or changes in insurance carriers prior to the expiration dates on the forms already on file with the Department.

17. Duration of Coverage. The Contractor shall keep all the required insurance in continuous effect until the date that the Department designates for the termination of the Contractor's responsibility, as defined by Article 1.20-1.08.14.

18. Compensation: There shall be no direct compensation allowed the Contractor on account of any premium or other charge necessary to obtain and keep in effect any insurance or bonds in connection with the Project, but the cost thereof shall be considered included in the general cost of the Project work.

1.20-1.03.08—Facilities Construction - Notice to Proceed and Commencement of Work: The Contractor shall commence and proceed with the Contract work on the date specified in a written Notice to Proceed issued by the Engineer to the Contractor. The date specified will be no later than 45 calendar days after the date of the execution of the Contract by the Department.

If the Engineer does not issue a Notice to Proceed to the Contractor within the said 45 calendar days, the Contractor shall have the option of canceling the Contract and its payment and performance bonds for the Project. Any failure by the Department to issue a notice to proceed, or to issue one on a timely basis, shall not, however, constitute a breach of the Contract. Neither the Contractor nor any other party may use such a failure as a basis for any claim against the Department for damages.

The Contractor shall not begin physical Project construction prior to the date specified for same by the Engineer in the Notice to Proceed, except as may be otherwise authorized by the Engineer in writing.

SECTION 1.20-1.04
SCOPE OF WORK FOR
FACILITIES CONSTRUCTION

1.20-1.04.01—Facilities Construction - Intent of Contract
1.20-1.04.02—Facilities Construction - Increased or Decreased Quantities of Minor Items, and Elimination of Minor Items
1.20-1.04.03—Facilities Construction - Changes in Quantities and Significant Changes in the Character of Work
1.20-1.04.04—Facilities Construction - Differing Site Conditions
1.20-1.04.05—Facilities Construction - Extra Work
1.20-1.04.06—Facilities Construction - Removal and Disposal of Structures on the Work Site
1.20-1.04.07—Facilities Construction - Rights in and Use of Materials Found on the Work Site

1.20-1.04.01—Facilities Construction - Intent of Contract: The intent of the Contract is to prescribe a complete work or improvement that the Contractor undertakes and is required to do in full compliance with the specifications, plans, special provisions, proposal, and other Contract documents. The Contractor shall perform all Project work in conformity with the lines, grades, typical cross-sections, dimensions, and other data shown on the plans and other Contract documents, as they may be modified by written orders from the Engineer subsequent to the date of the Contract. Said work includes the furnishing of all materials, implements, machinery, equipment, tools, supplies, transportation, labor, and all other things necessary for the satisfactory prosecution and completion of the Project.

It is not the intent of the Contract plans to show every pipe, wire, conduit, fitting, and appurtenance. Such components required to complete the Project in accordance with best trade practices and code requirements, shall nonetheless be included in the Contract work and shall not be deemed extra work.

The organization and divisions of work that are set forth within the Contract shall not

determine the appropriate divisions of work or responsibility among the Contractor and individual subcontractors, unless the Contract dictates otherwise.

1.20-1.04.02—Facilities Construction - Increased or Decreased Quantities of Minor Items, and Elimination of Minor Items: An increase or decrease in the quantity of a Contract item shall be deemed to have occurred for the purposes of these specifications when the total pay quantity of that item (i.e., the total number of units of that item for which payment is due to the Contractor as of the time when the work under that item has been completed) is either more or less than the estimated quantity of that item which was given in the bid proposal form or in the Contract as bid upon (referred to below in this section as the “estimated quantity” of the given item). This article shall apply only to minor Contract items, and not to major items in the original Contract. Any quantity increase or decrease from an estimated quantity, if that increase or decrease results from a significant change in the character of the work as defined in Article 1.20-1.04.03(4)(a), shall be treated in accordance with the provisions of Article 1.20-1.04.03, and shall not be governed by or treated in accordance with the provisions of this article. Any such increase or decrease that occurs as the result of a differing site condition as defined in Article 1.20-1.04.04 shall be treated in accordance with the provisions of this article only to the extent that those provisions do not directly conflict with Article 1.20-1.04.04. If the total pay quantity of any minor item varies from the estimated quantity by 25% or less, payment for that item will be made at the original Contract unit price therefor, unless said price is eligible for adjustment under Article 1.20-1.04.03. If the total pay quantity of any minor item varies from the estimated quantity by more than 25%, the compensation payable to the Contractor for that item will be determined in accordance with the provisions of this article. If, however, the Engineer and Contractor have executed a construction order specifying the payment to be made for the item, then payment will be made in accordance with the terms of said order. As an alternative to any and all bases for payment described in this article, the Department may, in any circumstance described in this article, make any price or payment adjustment agreed upon in writing by the Department and the Contractor.

(a) Increases of More Than 25 Percent: If the total pay quantity of a minor item exceeds the estimated quantity by more than 25%, the quantity of work in excess of 125% of the estimated quantity shall be paid for (i) by adjusting the Contract unit price for the quantity exceeding 125% (and only for that "excess" quantity) in the manner described in this Article; (ii) at the option of the Engineer, on a cost-plus basis as provided in Article 1.20-1.09.04; or (iii) on any basis agreed upon in writing by the Engineer and the Contractor.

If the Engineer does not elect to pay for said excess units on a cost-plus basis or according to such a written agreement, the price or payment adjustment shall be made according to the following principles: The increase or decrease in the unit price for the excess units of the subject item shall be the difference between the original Contract unit price and the actual unit cost, said difference to be calculated in the manner described hereafter, as of the time when work under the item was completed. If the costs of work under such item include fixed costs, all such fixed costs shall be deemed to have been recovered by the Contractor as part of the payments made by the

Department for the first 125% of the estimated quantity. Such fixed costs shall therefore be excluded from any computation used to adjust the price or payment for the excess units of the given item. Subject to the above provisions, the actual unit cost of the item to be adjusted shall be determined by the Engineer in the same way that it would be determined if the work were to be paid for on a cost-plus basis as provided in Article 1.20-1.09.04.

If, however, the aggregate payment for the excess number of units, if they were paid for at the original, unadjusted Contract price, would be less than $25,000, the Engineer shall not adjust the Contract unit price.

(b) Decreases of More Than 25%: If the total pay quantity of any minor item is less than 75% of the estimated quantity, the original Contract unit price for the item will not be adjusted unless the Contractor gives a written request for such an adjustment to the Engineer. If the Contractor so requests, the quantity of said item performed or provided shall be paid for by (i) adjusting the Contract unit price as hereinafter provided; (ii) at the option of the Engineer, on a cost-plus basis as provided in Article 1.20-1.09.04, except that in this kind of instance, the Contractor's fixed cost shall be included in the calculation; or (iii) on any basis agreed upon in writing by the Engineer and the Contractor.

The unit price paid for the decreased number of units shall not, in any case, be less than the unit price in the original Contract. On the other hand, the aggregate payment for a decreased total pay quantity of a minor item may not exceed the aggregate payment which would be made for the performance of 75% of the estimated quantity at the original Contract unit price for that item.

If the Engineer does not elect to pay for the decreased quantity of units on a cost-plus basis or on a basis established by written agreement, the price or payment adjustment shall be made according to the following principles:

The amount of the adjustment of the original Contract unit price shall be the difference between that unit price and the actual unit cost (including fixed costs), to be calculated as of the time all work under the item has been completed. The Engineer shall determine such actual unit costs in the same way that they would be determined if payment were to be made on a cost-plus basis under Article 1.20-1.09.04.

(c) Eliminated Items: If an item is entirely eliminated from the Contract, the Department will pay the Contractor only for costs which it incurred in connection with the eliminated item prior to the date upon which the Engineer provided the Contractor with written notice of said elimination. If the Contractor had ordered Project materials (that conformed to all pertinent Contract requirements) prior to the aforesaid date of notification, and if the orders for said materials could not have been canceled within 2 business days after the date of notification, the Department shall pay the Contractor for said materials at their actual cost to the Contractor. In such a case, the materials shall become property of the State and the actual cost of any further handling necessary to deliver them to the Department shall be assumed by the State. If the materials are returnable to their vendor and if the Engineer so directs, the Contractor shall return the materials to the vendor and the State shall reimburse the Contractor (i) for any reasonable charges made to the Contractor by the vendor for the return of the

materials, and (ii) for the actual costs to the Contractor of its handling the materials in returning them to the vendor. Such charges or actual costs to be paid by the Department shall be computed as though the work was being paid for on a cost-plus basis under Articles 1.20-1.04.02(b)(ii) and 1.20-1.09.04.

1.20-1.04.03—Facilities Construction - Changes in Quantities and Significant Changes in the Character of Work:

(1) The Engineer reserves the right to make, in writing, at any time during the work, such changes in quantities and such alterations in the work as are necessary to satisfactorily complete the project. Such changes in quantities and alterations shall not invalidate the contract nor release the surety, and the Contractor agrees to perform the work as altered.

(2) If the alterations or changes in quantities significantly change the character of the work under the contract, whether or not changed by any such different quantities or alterations, an adjustment, excluding loss of anticipated profits, will be made to the contract. The basis for the adjustment shall be agreed upon prior to the performance of work. If a basis cannot be agreed upon, then an adjustment will be made either for or against the Contractor in such amount as the Engineer may determine to be fair and equitable.

(3) If the alterations or changes in quantities do not significantly change the character of the work to be performed under the contract, the altered work will be paid for as provided elsewhere in the contract.

(4) The term "significant change" shall be construed to apply only to the following circumstances:

(a) When the character of the work as altered differs materially in kind or nature from that involved or included in the original proposed construction or

(b) When a major item of work, as defined elsewhere in the Contract, is increased in excess of 125% or decreased below 75% of the original Contract quantity. Any allowance for an increase in quantity shall apply only to that portion in excess of 125% of original contract item quantity, or in case of a decrease below 75%, to the actual amount of work performed

1.20-1.04.04—Facilities Construction - Differing Site Conditions:

(1) During the progress of the work, if subsurface or latent physical conditions are encountered at the site differing materially from those indicated in the Contract or if unknown physical conditions of an unusual nature, differing materially from those ordinarily encountered and generally recognized as inherent in the work provided for in the Contract, are encountered at the site, the party discovering such conditions shall promptly notify the other party in writing of the specific differing conditions before they are disturbed and before the affected work is performed.

(2) Upon written notification, the Engineer will investigate the conditions, and if he/she determines that the conditions materially differ and cause an increase or decrease in the cost or time required for the performance of any work under the Contract, an adjustment, excluding loss of anticipated profits, will be made and the Contract modified in writing accordingly. The Engineer will notify the

Contractor of his/her determination whether or not an adjustment of the Contract is warranted.

(3) No Contract adjustment that results in a benefit to the Contractor will be allowed unless the Contractor has provided the required written notice.

(4) No Contract adjustment will be allowed under this clause for any effects caused on unchanged work.

1.20.1.04.05—Facilities Construction - Extra Work: Unforeseen work made necessary by the Engineer's changes of the Contract plans or specifications, or work that is necessary for completion of the Project, but for which no price is provided in the Contract, shall be done in accordance with the requirements of the specifications and as directed by the Engineer. The Engineer shall notify the Contractor of the necessity for such extra work, stipulating its character and extent, and shall notify the Contractor as to whether the Engineer wants the Contractor to propose a unit price or, instead, a lump sum, for the extra work. Within 5 days of receipt of such notification, the Contractor shall advise the Engineer, in writing, of the compensation (as a unit price or lump sum, whichever has been requested by the Engineer) that the Contractor requests as compensation for the required extra work. The Contractor's request shall be itemized and reasonably detailed, and shall include all known or anticipated direct and indirect costs of the work, including but not limited to, the costs of all safety and other equipment, small tools, labor, subcontractor quotes, consumables, field office overhead, home office overhead, insurance, bonding, and profit. The character and extent of the extra work, together with the basis of compensation, shall be communicated to the Contractor by means of a construction order which, when signed by the Engineer, shall become a part of the Contract. If a Contractor objects to any portion of a construction order submitted to it by the Engineer for signing, and if the Contractor is not willing to sign that order or some portion of that order, the Contractor must, within 15 days of its receipt of said order, return the order with a letter to the Department's Assistant District Engineer administering the Contract, describing specifically what portions of the order the Contractor finds objectionable, the nature of its objections, and the bases for its objections. If the Contractor does not do so, it shall be deemed to have accepted the terms of the construction order. If the Engineer changes the scope of Contract work, the Contractor shall submit a proposed revised schedule and a cost revision proposal, which takes all such changes into account, if the Contractor believes that such revisions are warranted. If the schedule is to be revised, it will be revised in accordance with Article 1.20-1.08.08.

1.20-1.04.06—Facilities Construction - Removal and Disposal of Structures on the Work Site: All structures on the Project site which are not to remain on the Project site after completion of the Project shall be removed from said site and disposed of by the Contractor once it is no longer needed for the Project, and any such structure shall then become the property of the Contractor, except as otherwise required or provided by Article 1.20-1.10.07.

1.20-1.04.07—Facilities Construction - Rights in and Use of Materials Found on the Work Site: Upon written request of the Contractor and with the written approval of the Engineer, subject to limitations which may be set forth within such approval, any stone, gravel, sand, topsoil or any material from existing bridge substructures, buildings, or other structures, found within the limits of the Project may be excavated or removed and used by the Contractor on the Project, provided that said materials meet the requirements of the specification for such materials. Any materials excavated or removed shall not be taken off the Project site unless the Engineer in writing specifically authorizes such action. The following conditions shall govern these matters:

1. Excavation or removal of materials that would necessarily be excavated or removed in making the improvement will be paid for at the applicable Contract unit prices; and, in addition, the item for which this material is used will also be paid for at its Contract unit price. The Contractor will not be charged for such materials. The Contractor shall, without compensation, place in the embankment or elsewhere, as appropriate, sufficient suitable material to fill the space that the excavated materials would have occupied, unless otherwise directed by the Engineer.
2. The excavation or removal of materials that are not required to be excavated or removed in connection with the Contract work will not be paid for; and the Contractor will be charged for such materials at a negotiated unit price. The item for which this material is used will be paid for at its Contract unit price. The Contractor shall, without compensation, backfill with accepted material the space that the excavated materials had occupied, to the satisfaction of the Engineer, unless otherwise directed by the Engineer.

Surplus material shall be removed from the Project only with the Engineer's written permission. The Engineer may determine that such material is not surplus, and may order that it be incorporated into the Project.

SECTION 1.20-1.05
CONTROL OF THE WORK FOR FACILITIES CONSTRUCTION

1.20-1.05.01—Facilities Construction - Authority of Engineer
1.20-1.05.02—Facilities Construction - Contractor Submittals
1.20-1.05.03—Facilities Construction - Conformity with Plans and Specifications
1.20-1.05.04—Facilities Construction - Coordination of Special Provisions, Plans, Supplemental Specifications and Standard Specifications and Other Contract Requirements
1.20-1.05.05—Facilities Construction - Cooperation by Contractor
1.20-1.05.06—Facilities Construction - Cooperation with Utilities (Including Railroads)
1.20-1.05.07—Facilities Construction - Coordination with Work by Other Parties
1.20-1.05.08—Facilities Construction - Schedules and Reports
1.20-1.05.09—Facilities Construction - Authority of Inspectors
1.20-1.05.10—Facilities Construction - Inspection
1.20-1.05.11—Facilities Construction - Removal of Defective or Unauthorized Work

1.20-1.05.12—Facilities Construction - Payrolls
1.20-1.05.13—Facilities Construction - Examining and Copying Contractor's Records
1.20-1.05.14—Facilities Construction - Termination Clause
1.20-1.05.15—Facilities Construction - Markings for Underground Facilities
1.20-1.05.16—Facilities Construction - Dimensions and Measurements
1.20-1.05.17—Facilities Construction - Welding
1.20-1.05.23—Facilities Construction - Requests for Information (RFIs) and Requests for Change (RFCs)
1.20-1.05.24—Facilities Construction - Project Meetings

1.20-1.05.01—Facilities Construction - Authority of Engineer: All work shall be subject to the review of the Engineer. He shall decide all questions as to interpretation of the plans and specifications, and questions of mutual or respective rights of the Contractor and other Department contractors. The Engineer shall decide on an acceptable rate of progress, on the manner of performance, and on what shall be deemed acceptable fulfillment of the Contract. The Engineer shall have the right to determine the points at which the Contractor may begin work and the order in which the work shall be prosecuted in the best interests of the State within the intent of the terms in the Contract.

If a Project-related dispute arises between the Contractor and Department personnel assigned to the Project, and if those parties prove unable to resolve it, the Contractor may submit a detailed written description of the dispute to the Department's Assistant District Engineer administering the Contract.

It must be understood, though, that at no time may the Contractor, because of its disagreement with the Engineer, either disregard the orders of the Engineer or halt Project construction. If the Contractor cannot resolve a Project work or pricing dispute with the Engineer, the Contractor's proper remedy is a claim under CGS Section 4-61. A Contractor that disregards the orders of the Engineer with regard to the prosecution of Project work, or who refuses to continue Project work because of a disagreement with the Engineer, may be subject to termination of its Contract, to a subsequent finding that it is non-responsible as an apparent low bidder for a Department contract, to the assessment of liquidated damages, and to other adverse legal or administrative action by the Department.

1.20-1.05.02—Facilities Construction -Contractor Submittals:

1. **General:** Vacant
2. **Submittal Preparation and Processing:** Vacant
3. **Transmittal of Submittals**: Vacant
4. **Submittal Schedule:** At the Pre-Construction Meeting, the Contractor shall submit the initial submittal schedule. The initial submittal schedule will include all submittals required during the first 60 calendar days of construction, all submittals required to maintain orderly progress of the Work, and all submittal required early because of long lead time for manufacture or fabrication.

Following the Engineer's response to the initial submittal, the Contractor shall provide

copies of the schedule to the Engineer, Designer, the Contractor's subcontractors, and other parties required to comply with submittal dates indicated.

The Contractor shall submit the complete submittal schedule within 60 calendar days of the Notice to Proceed.

The Contractor shall update its submittal schedule once a month and distribute and post each updated schedule in the manner described above.

The submittal schedule shall be organized in numerical order by special provision number and by CSI-formatted specification section number. The Contractor shall include (1) time required for review, ordering, manufacturing, fabrication, and delivery when establishing dates; and (2) additional time required for making corrections or revisions to submittals noted by Designer or Engineer and additional time for handling and reviewing submittals required by those corrections. The Contractor shall coordinate submittal schedule with its subcontracts, the schedule of values, and their construction schedule.

5. Working Drawings (Delegated Design Submittals): When required by the Contract, or when ordered to do so by the Engineer, the Contractor shall prepare and submit working drawings, signed, sealed and dated by a qualified Professional Engineer licensed to practice in the State of Connecticut, for review.

There will be no direct payment for furnishing any working drawings, procedures or supporting calculations, but the cost thereof shall be considered as included in the general cost of the work.

a. Working Drawings for Permanent Construction: The Contractor shall submit drawings to the Designer on 22 in x 34 in sheets with a border and title block similar to the Department standard. Each drawing shall be a separate PDF file. Drawings shall be searchable. The first drawing shall include the Contractor's designer's Professional Engineer's digital signature, meeting the requirements of Adobe's Certified Document Services (CDS), and all other drawings shall include a watermark of the Professional Engineer's stamp in a common area of the border. Calculations, procedures and other supporting data may be submitted in an 8-1/2 in x 11 in format and shall be in a single PDF file. The first sheet of calculations shall include the Contractor's designer's Professional Engineer's digital signature, meeting the CDS requirements, Documents shall be named "Drawings," "Calculations," or "Supporting Documentation" as applicable.

The Contractor's designer, who prepares the working drawings, shall secure and maintain at no direct cost to the State a Professional Liability Insurance Policy for errors and omissions in the minimum amount of $2,000,000 per error or omission. The Contractor's designer may elect to obtain a policy containing a maximum $250,000 deductible clause, but if the Contractor's designer should obtain a policy containing such a clause, they shall be liable to the extent of at least the deductible amount. The Contractor's designer shall obtain the appropriate and proper endorsement of its Professional Liability Policy to cover the indemnification clause in this Contract, as the same relates to negligent acts, errors or omissions in the Project work performed by them. The Contractor's designer shall continue this liability insurance coverage for a period of (1) 3 years from the date of acceptance of the work by the Engineer, as evidenced by a State of Connecticut, Department of Transportation Form Number CON-

500, entitled "Certificate of Acceptance of Work," issued to the Contractor; or (2) 3 years after the termination of the Contract, whichever is earlier, subject to the continued commercial availability of such insurance. The Contractor shall supply to the Assistant District Engineer a certificate of insurance in accordance with Article 1.20-1.03.07 at the time that the working drawings for the Project are submitted.

b. Working Drawings for Temporary Construction: The Contractor shall submit drawings, calculations, procedures and other supporting data to the Assistant District Engineer in a format acceptable to the Assistant District Engineer.

c. Working Drawings for Permanent Construction: Drawings shall be submitted to the Designer on 22 in x 34 in sheets with a border and title block similar to the Department standard. Each drawing shall be a separate PDF file. Drawings shall be searchable. The first drawing shall include the Contractor's designer's Professional Engineer's digital signature, meeting the requirements of Adobe's Certified Document Services (CDS), and all other drawings shall include a watermark of the Professional Engineer's stamp in a common area of the border. Calculations, procedures and other supporting data may be submitted in an 8-1/2 in x 11 in format and shall be in a single PDF file. The first sheet of calculations shall include the Contractor's designer's Professional Engineer's digital signature, meeting the CDS requirements, Documents shall be named "Drawings," "Calculations," or "Supporting Documentation" as applicable.

6. Shop Drawings: When required by the Contract, or when ordered to do so by the Engineer, the Contractor shall prepare and submit shop drawings for review. Drawings shall be submitted on 22 in x 34 in sheets with an appropriate border and with a title block in the lower right-hand corner of each sheet. Each drawing shall be a separate PDF file. Drawings shall be searchable.

Shop Drawings consist of fabrication and installation drawings, roughing-in and setting drawings, schedules, patterns, templates and similar drawings, and wiring diagrams showing field-installed wiring, including power, signal, and control wiring. Standard information prepared without specific reference to the Project shall not be considered to be a Shop Drawing. Shop Drawings shall be project specific.

Shop drawings shall include the following information: Contract number, Project description, number and title of the drawing, date of drawing, revision number, name of Contractor and subcontractor submitting drawings, dimensions, identification of products, shop work manufacturing instructions, design calculations, statement of compliance with Contractual standards, notation of dimensions established by field measurement, notation of coordination requirements, relationship to adjoining construction clearly indicated, seal and signature of a professional engineer if specified, and any other information required by individual Contract provisions.

There will be no direct payment for furnishing any shop drawings, procedures or supporting calculations, but the cost thereof shall be considered as included in the general cost of the work.

7. Coordination Drawings: When required by the Contract, or when ordered to do so by the Engineer, the Contractor shall prepare and submit coordination drawings for review. Each drawing shall be a separate PDF file. Drawings shall be searchable.

The Contractor shall prepare coordination drawings according to requirements in other

Contract provisions, and additionally where installation is not completely shown on Shop Drawings, where limited space availability necessitates coordination, or if coordination is required to facilitate integration of products and materials fabricated or installed by more than one entity.

Coordination Drawings shall include Project-specific information drawn accurately to a scale large enough to indicate and resolve conflicts. Coordination Drawings shall not be based on standard printed data. Coordination Drawings shall include the following information, as applicable: (1) use applicable plans as a basis for preparation of Coordination Drawings and prepare sections, elevations, and details as needed to describe relationship of various systems and components; (2) coordinate the addition of trade-specific information to the coordination drawings by multiple contractors in a sequence that best provides for coordination of the information and resolution of conflicts between installed components before submitting for review; (3) indicate functional and spatial relationships of components of architectural, structural, civil, mechanical, and electrical systems; (4) indicate space requirements for routine maintenance and for anticipated replacement of components during the life of the installation; (5) show location and size of access doors required for access to concealed dampers, valves, and other controls; (6) indicate required installation sequences; (7) indicate dimensions shown on the plans, specifically noting dimensions that appear to be in conflict with submitted equipment and minimum clearance requirements, and (8) provide alternate sketches to the Designer indicating proposed resolution of such conflicts.

There will be no direct payment for furnishing any coordination drawings, but the cost thereof shall be considered as included in the general cost of the work.

8. Product Data: When required by the Contract, or when ordered to do so by the Engineer, the Contractor shall prepare and submit product data for review in a PDF file.

The Contractor shall provide all product data in a single submittal for each element of construction or system and shall mark each submittal with the Contract item number.

The Contractor shall mark each copy of a product data submittal to show applicable choices and options. Where product data includes information on several products that are not required, copies shall be marked to indicate the applicable information. Product data shall include the following information and confirmations to the extent applicable: manufacturer's printed recommendations, compliance with recognized trade association standards, compliance with recognized testing agency standards, application of testing agency labels and seals, notation of coordination requirements, and any other information required by the individual Contract provisions.

There will be no direct payment for furnishing any product data, but the cost thereof shall be considered as included in the general cost of the work.

9. Product Samples: When required by the Contract, or when ordered to do so by the Engineer, the Contractor shall prepare and submit product samples for review.

Product Samples are samples submitted for review and action by the Designer, which are: (1) physically identical to the proposed product or material cured and finished as required by the Contract; or (2) submitted for review of kind, color, pattern, thickness, and texture. Samples shall be used for a final check of these characteristics with other

elements, and for a comparison of the characteristics of the approved sample with those of the actual component as delivered and installed.

The following information shall be submitted with product samples to the extent applicable: Contract number; Project description; generic description of the sample (name or trade reference, type or quality or grade, and any further designation necessary to identify the items or materials); sample source; product name; manufacturer's name; confirmation of availability; and anticipated delivery time.

In conjunction with the submission of physical product samples, a digital photograph of the sample shall be uploaded into ProjectWise.

The Designer will retain one set of the samples, transmit one set of same to the Engineer, and transmit any remaining sets of samples to the Contractor. The Engineer will retain the samples at the Project site for quality comparisons throughout the duration of the Project.

There will be no direct payment for furnishing any product samples, but the cost thereof shall be considered as included in the general cost of the work.

10. Quality Assurance Submittals: When required by the Contract, or when ordered to do so by the Engineer, the Contractor shall prepare and submit quality assurance submittals for review in a PDF file.

Quality assurance submittals consist of qualification data, design data, certifications, manufacturer's instructions, manufacturer's field reports, test reports, Material Safety Data Sheets (MSDSs), and other quality assurance information required by individual Contract provisions.

Where Contract provisions require certification that a product, material, or installation complies with specified requirements, the Contractor shall submit a notarized certification from the manufacturer certifying said compliance. An officer of the manufacturer or other individual authorized to sign documents on behalf of the company shall sign the certification.

Where Contract provisions require the Contractor shall provide a certification letter on the manufacturer's letterhead to certify that asbestos is not contained in the materials. The manufacturer certification letter shall be formatted in the following manner:

[Addressed to:]	Commissioner of Transportation Department of Transportation P.O. Box 317546 Newington, Connecticut 06131-7546

Project Title and Number

[We] hereby certify that all materials manufactured by [Insert Manufacturer Name] are asbestos-free.

[Signature:]	[Name of authorized signatory] [Title]

Submittals associated with these materials will not be reviewed without the required

manufacturer certification letter.

There will be no direct payment for furnishing any quality assurance submittals, but the cost thereof shall be considered as included in the general cost of the work.

11. Submittal Reviewer's Action: The Designer or Engineer will review each submittal, mark each with a uniform, self-explanatory action stamp, and return the stamped submittal promptly to the Contractor. The stamp will be marked as follows to indicate the action taken:

(a) If submittals are marked "No Exceptions Noted," the Designer or Engineer has not observed any statement or feature that appears to deviate from the Contract requirements. This disposition is contingent on being able to execute the manufacturer's written warranty in compliance with the Contract provisions.

(b) If submittals are marked "Exceptions as Noted," the considerations or changes noted by the Designer or Engineer are necessary in order for the submittal to comply with Contract requirements. This disposition is contingent on being able to execute the manufacturer's written warranty in compliance with the Contract provisions.

(c) If submittals are marked "Revise and Resubmit," the Contractor shall revise and resubmit the submittal to address the deficiencies or provide additional information requested by the Designer or Engineer

(d) If submittals are marked "Rejected," the Contractor shall prepare and submit a new submittal in accordance with the Designer's notations.

(e) If submittals are primarily for information or record purposes, the Designer will return the submittal marked "No Action Required." This disposition is contingent on being able to execute the manufacturer's written warranty in compliance with the Contract provisions.

Upon completion of the review, the submittal reviewer will notify the Contractor by e-mail that the submittal dispositions are available in ProjectWise.

The Contractor shall not proceed with the part of the Project covered by the submittal until the submittal is marked "No Exceptions Noted" or "Exceptions as Noted" by the Designer or the Engineer. The Contractor shall retain sole responsibility for compliance with all Contract requirements.

The Contractor shall print 2 copies through ProjectWise of each submittal marked "No Exceptions Noted" or "Exceptions as Noted" to the Assistant District Engineer for use by the Engineer within 7 calendar days of the Contractor's receipt of the submittal reviewer's e-mail. The Contractor shall not perform physical work related to the submittal until the 2 copies are provided to the Assistant District Engineer.

The Contractor shall mark up one set of shop drawings and one set of working drawings and retain them as a "Record Document."

Maintenance manuals and warranties will not be returned unless they are Rejected.

1.20-1.05.03—Facilities Construction - Conformity with Plans and Specifications: All work performed and all materials furnished by the Contractor must be, in the opinion of the Engineer, in conformity with the lines, grades, cross-sections, dimensions and material requirements, including tolerances, shown on the plans or indicated in the Contract specifications.

The minimum quantity or quality level to be provided or performed is shown or

specified in the Contract. The actual installation may comply exactly with the minimum quantity or quality specified or it may exceed the minimum within reasonable limits. Indicated numeric values are minimum or maximum, as appropriate for the context of the requirements. The Contractor shall refer uncertainties to the Engineer for a decision before proceeding.

If the Engineer believes that the materials or the finished product in which the materials were used are not in conformity with the plans and specifications, but believes nonetheless that the finished product is acceptable, he will then determine whether or not the work will be accepted and remain in place. If the Engineer believes that the work should be accepted, he will issue a construction order confirming his determination, and may provide therein for any equitable adjustment in the basis of payment which he deems appropriate.

If, in the opinion of the Engineer, any material provided by the Contractor, any finished product in which the materials were used, or any work performed does not conform to the plans and specifications and has resulted in an unacceptable product, the Contractor shall, at its own expense, either cure or remove and replace the unaccepted work and material, as the Engineer directs.

1.20-1.05.04—Facilities Construction - Coordination of Special Provisions, Plans, Supplemental Specifications and Standard Specifications and Other Contract Requirements: All requirements indicated on the plans or in the Standard Specifications, the Supplemental Specifications, Special Provisions or other Contract provisions shall be equally binding on the Contractor, unless there is a conflict between or among any of those requirements. In the case of such a conflict, the order of governance among those requirements, in order of descending authority, shall be as follows:

1. Environmental Permits
2. Environmental Permit Applications
3. Special Provisions
4. Plans other than Standard Sheets (enlarged details on plans, used to clarify construction, shall take precedence over smaller details of the same area; and information contained in schedules or tables, titled as such, shall take precedence over other data on plans)
5. Standard Sheets
6. Supplemental Specifications
7. Standard Specifications and other Contract requirements

Numerical designations of dimensions shall take precedence over dimensions calculated by applying a scale to graphic representations. Neither party to the Contract may take advantage of any obvious error or omission in the Contract. Should either party to the Contract discover such an error or omission, that party shall notify the other party of same immediately in writing. The Engineer will make such corrections and interpretations of the Contract as are necessary, in his judgment, to fulfill the purposes of the Contract that are evident from examining the Contract as a whole.

If the Contract includes an item that does not have a corresponding specification for either performance or payment purposes, the Contractor shall notify the Engineer of that

fact in writing at least 2 weeks prior to ordering materials for or commencing work on the item. If the Department's documents do not contain such a specification, the Engineer shall, if possible, derive an appropriate specification from applicable AASHTO Specifications or, if necessary, ASTM Specifications. If neither of those sources provides a suitable specification, the Contractor shall seek guidance from the Engineer with regard to the item, and the Engineer will formulate a reasonable specification for the item. When compliance with 2 or more standards is specified, and the standards may establish different or conflicting requirements for minimum quantities or quality levels, the Contractor shall refer such issues to the Engineer for a decision before proceeding with the pertinent work.

Industry Standards: Each entity engaged in construction of the Contract shall be familiar with industry standards applicable to that entity's construction activities. If printed standards have been established by organizations referenced in Article 1.20-1.01.02 or in the Contract, the Contractor shall obtain copies of said standards directly from the publication source.

Unless the Special Provisions include more stringent requirements, applicable construction industry standards have the same force and effect as if bound or copied directly into the Special Provisions to the extent referenced. Such standards are made a part of the Contract by reference.

The Contractor shall comply with the standard in effect as of the date of the advertisement for solicitation of bids, unless specifically directed otherwise in writing by the Engineer.

All references in the Contract to industry standards or codes refer to the last editions of same that were in effect at the date for the advertisement for solicitation of bids. Such references include current addenda and errata, if any, and shall be considered a part of the Contract.

1.20-1.05.05—Facilities Construction - Cooperation by Contractor: The Contractor will be supplied by the Department with copies of the plans.

The Contractor shall maintain in good order, in a secure, fire-resistant location at the Project site, 2 copies of all plans, Special Provisions (including CSI-formatted specifications within a particular Special Provision), Addenda, submittals, Construction Orders, and other modifications, schedules and instructions. The Contractor shall mark one set of these documents to record all changes made during construction. The other set shall be kept clean of all markings. Both sets shall be available to the Engineer at all times.

Record Drawings: The Contractor shall maintain a complete set of Record Drawings by maintaining a clean, undamaged set of blue or black line prints of Contract drawings, Working Drawings, Shop Drawings, and Coordination Drawings. The Contractor shall mark whichever drawings within the set that are most capable of showing conditions fully and accurately where the actual installation varies substantially from the Project work as originally shown. Where Working Drawings, Shop Drawings, or Coordination Drawings are used, the Contractor shall record a cross-reference at the corresponding location on the Contract plans. The Contractor shall give particular attention to concealed elements that would be difficult to measure and record at a later date. The

Contractor shall (1) mark record sets with red erasable pencil, (2) use other colors to distinguish between variations in separate categories of the Project work, (3) mark new information that was not shown on Contract plans, Working Drawings, Shop Drawings, or Coordination Drawings, (4) note related Addenda and construction order dates where applicable.

Record Specifications: The Contractor shall maintain one complete copy of the Record Specifications, including related Addenda, construction orders and modifications issued in printed form during construction. The Contractor shall (1) mark these documents to show substantial variations in actual Project work performed in comparison with the text of the Specifications and modifications, (2) take care to show clearly on these documents any selected options and information on concealed construction that would be difficult to view at a later date, (3) note related record drawing information and Product Data.

Record Reports: The Contractor shall maintain one binder of all miscellaneous records such as manufacturer startup reports, test reports, and Building and Fire Code inspection reports required by other Contract Provisions (including CSI-formatted Specifications within a particular Special Provision). The miscellaneous records shall be arranged systematically according to the organization of the Contract provisions.

No Asbestos Certification: The Contractor shall complete and sign a certification letter assuring the Department that no asbestos-containing materials have been used in the construction of the Contract. The Department will not issue the Certificate of Compliance without this completed and signed certification form. The Contractor certification letter shall be formatted in the following manner:

CONTRACTOR CERTIFICATION:
RE/ASBESTOS CONTENT OF MATERIALS

State of Connecticut
Department of Transportation
PO Box 317546
Newington, CT 06131-7546

1. Project Number: _____
2. Project Name: _____
3. Contractor Name: _____
4. This is to certify that I fully understand that it is the requirement of the Connecticut Department of Transportation that only materials that do not contain asbestos of any kind or amount are to be utilized in the construction of this Project.

   I therefore certify that, to the best of my knowledge, all materials installed under this Contract are asbestos-free.

   For the one-year warranty period after the issuance of the Certificate of Compliance, I agree to remove any asbestos-containing material identified by the

Connecticut Department of Transportation and reinstall an approved, non-asbestos-containing material that is in compliance with the original Contract at no additional cost to the State.

5. Date of Certificate of Compliance: _____
6. Date of the Asbestos Certification: _____
7. Signature of Authorized Party Agreeing to the Terms & Conditions Identified Herein & as Further Stated in the Contract:

_____	_____
Signature	Title
_____	_____
Printed Name	Date

The Contractor shall give the Project constant attention to facilitate the progress thereof, shall cooperate with the Department, and shall promptly comply with all orders and directions of the Engineer.

Project Superintendent: The Contractor shall be represented on Site by a Project Superintendent. The Project Superintendent shall be on the Project Site whenever Project work is being performed. The Project Superintendent shall (1) attend all meetings between the Contractor and the Department, the Contractor and its subcontractors, and any other meetings that affect the progress of the Project; (2) be knowledgeable of the status of all parts of the work throughout the duration of the Project; (3) coordinate the activities of the subcontractors; (4) maintain the construction schedule; (5) be the Contractor's quality assurance/quality control representative; (6) prepare Daily Construction Reports in accordance with Article 1.20-1.05.08; (7) prepare or approve the Biweekly Schedules required to be submitted by the Contractor in Article 1.20-1.05.08; (8) have full authority to promptly execute and carry out the orders and directions of the Engineer within the terms of the Contract; and (9) to supply such materials, equipment, tools, labor and incidentals as may be required by the Contract or by the Engineer.

The Project Superintendent shall be an administrative employee of the Contractor or a Consultant hired by the Contractor to coordinate and expedite all phases of the work on a full-time daily basis, including associated project trades, on the Project Site.

The Contractor shall submit a written resume of the proposed Project Superintendent within 7 calendar days of the award of the Contract for the Department's acceptance. This resume shall demonstrate their superintendent work experience on a minimum of 2 projects of this type, scale, and complexity of this Project.

At any time during the Project, the Department may ask for any reason that the Project Superintendent be replaced. If the Department directs this action, the Contractor shall submit a written resume for a new Project Superintendent with the intent that this individual be in place on the Project within 30 calendar days of their acceptance by the Department. During this time, the duties of the Project Superintendent shall be performed by the Project Coordinator. If there is no Project Coordinator on the Project, the Department may allow the original Project Superintendent to remain until the new

Project Superintendent begins. The original Project Superintendent may still work on the Project in another capacity at the discretion of the Contractor.

Voluntary Partnering: The Department wants to establish a cohesive partnership with the Contractor and its principal subcontractors on the Project, so that the partnership can draw on the strengths of each organization in order to identify and pursue the partners' mutual Project goals. Chief among those will be the effective and efficient completion of the Project, within budget, on schedule, and in accordance with applicable plans, specifications, and other Contract provisions.

If the Contractor believes at any point before or during Project construction that the creation of formal partnering between itself and the Department, with the use of a third-party facilitator, would help the Contractor and the Department ("Partners") to reach these goals, the Contractor may submit a written request to the District Engineer of the District in which the Project will be constructed for the establishment of formal partnering between the Parties. If the Contractor makes such a request, the Department will engage in that partnering.

Any costs incurred by the Partners jointly in connection with Project partnering activities, to the extent that those costs are recognized as legitimate and appropriate by both Partners, will be shared equally between them. Any other costs incurred because of partnering activities will be borne by the Partner that incurred them.

If the Contractor and the Department decide to pursue a formal partnering initiative, they Contractor and The Department will arrange first to meet in order to select a third-party partnering facilitator and to plan a partnering development and team-building workshop. After they agree upon the services to be performed by the facilitator and the range of compensation for the facilitator that would be acceptable to them, the Contractor will contract accordingly for the services of said facilitator. The Department will reimburse the Contractor for fifty percent (50%) of the payments made under that contract, so long as the activities paid for were appropriate and within the contemplation of the Partners.

At the Partners' initial partnering meeting, the Partners will also determine who should attend the first partnering workshop, what the workshop's agenda will be, how long the workshop should last, and when and where it will be held. Unless the Partners agree otherwise, attendance at the first partnering workshop will be mandatory for the Department's District Engineer for the Project and the Department's other key Project personnel, the Contractor's on-Site Project manager and other key supervisory Project personnel, and, if the Contractor agrees to it, the key supervisory personnel of the Contractor's principal Project subcontractors. The Partners will also request that the Project design engineers and key local government personnel send Regional/District and Corporate/State-level managers to the workshop and direct them to participate in Project partnering activities as and when requested to do so by the Partners.

With the agreement of the Partners, follow-up Project partnering workshops will be held periodically until the Department closes out the Contract.

If the Partners agree on a formal partnering charter for the Project, the establishment of that charter will not change the legal relationship of the Partners to the Contract; it will not alter, supplement, or eliminate any of the Partners' rights or obligations under the Contract.

1.20-1.05.06—Facilities Construction - Cooperation with Utilities (Including Railroads): The Engineer may anticipate that a Project construction activity will require the removal, repair, replacement or relocation of a utility appurtenance. In such an instance, the Engineer, in advance of the commencement of such activity, will notify the affected utilities, either directly or through the local government, of the anticipated nature and timing of said activity. The Engineer will endeavor to have all necessary adjustments of public or private utility fixtures, pipelines, and other appurtenances within or adjacent to the limits of Project construction made as soon as practicable, when such changes are required by the State or local government.

Whenever the Engineer determines that the relocation or adjustment of poles or the overhead plant of public or private utilities or railroad facilities is dependent upon the completion of certain required Contract activities, the Contractor shall complete those activities within a reasonable length of time.

Temporary and permanent changes required by the State or local government in water lines, gas lines, sewer lines, wire lines, service connections, water or gas meter boxes, water or gas valve boxes, light standards, cableways, signals and all other utility (including railroad) appurtenances within the Site of the proposed Project construction are to be made by others at no expense to the Contractor, except as otherwise provided for in the Special Provisions or as noted on the plans.

When the Contractor is required by the Engineer to relocate utility appurtenances, such work will be paid for as extra work unless specific bid items for such work appear in the Contract.

If the Contractor, for its convenience or for any other reason, desires a change in the location of a water line, gas line, sewer line, wire line, service connection, water or gas meter box, valve box, light standard, cableway, signal or any other utility (including railroad) appurtenances, the Contractor shall satisfy the Department that the proposed relocation will not interfere with the Contractor's or other contractors' Project operations or their fulfillment of the requirements of the plans, and that said change will not create an obstruction or hazard to traffic. If the requested change of location is acceptable to the Engineer, the Contractor shall make its own request for such relocation work to the utility companies, pipe owners or other parties likely to be affected by said work. Such relocation work shall be done at the Contractor's sole expense.

The Contractor shall schedule its operations in such a manner as to minimize interference with the operations of the utility companies or local governments in effecting the installation of new facilities, as shown on the plans, or the relocation of their existing facilities. The Contractor shall consider in its bid all permanent and temporary utility appurtenances in their present or relocated positions and any installation of new facilities required for the Project. The Department will not make any additional compensation to the Contractor for delays, inconvenience or damage sustained by the Contractor due to

(i) interference with Project construction caused by the location, condition or operation of utility (including railroad) appurtenances or

(ii) the installation, removal, or relocation of such appurtenances; and the Contractor may not make a claim for any such compensation.

1.20-1.05.07—Facilities Construction - Coordination with Work by Other Parties: The Contractor shall make every effort to perform its work so as not to interfere with other work for the State or other parties. In the case of a dispute with another contractor working for the Department regarding their work for the State, or in the case of a conflict between their planned operations or the needs of their projects, the Contractor shall bring that dispute or conflict to the Engineer's attention and the Engineer shall decide how it shall be resolved. The Engineer's decision shall be binding upon all of the contractors working for the Department who are involved in the matter.

The Contractor shall, as far as possible, schedule and otherwise plan and arrange its work, and place and dispose of its Project materials, so as not to interfere with the operations of other contractors working for the State. The Contractor shall, as necessary to accomplish this goal, endeavor to coordinate and schedule its work in the way which will interfere least with the work of other parties.

If the Contractor's work or activities under the Contract come into conflict with other activities or work for the State, any financial or other liability arising from such conflicts shall be the Contractor's; and the Contractor shall protect and save harmless the State from any and all damages or claims, and the costs of defending same, which may arise because of inconvenience, delay, financial hardship, or injuries caused to the Contractor or to other contractors as a result of such conflicts, unless:

(a) The Contractor notifies the Engineer of such conflicts as soon as the likelihood of such a conflict becomes apparent; or, if such likelihood could not have been foreseen earlier, then as soon as the conflict becomes apparent.

(b) The Contractor waits for direction from the Engineer as to how the conflict should be avoided or resolved, and the Contractor does not proceed with the work involved in the conflict until the Engineer has provided the Contractor with such direction.

(c) The Contractor follows the directions given by the Engineer for avoiding, resolving, or minimizing the conflict.

The Contractor shall be responsible for the completion of its Contract work, regardless of any interference with, or delay of, that work which may be caused by the presence or activities of other contractors working for the State.

The Engineer and the Owner will occupy the Project Site during the entire construction period. The Engineer and the Owner reserve the right to install equipment prior to Semi-Final Inspection and the issuance of the Certificate of Compliance provided that such installation does not interfere with the Contractor’s completion of their Work. The Owner and any PURA regulated utility installers reserve the right to perform work in the Communications Room, including the Owner changing locks on the doors, on or about the time the above-ceiling inspection is performed by the Engineer. Such installations shall not constitute acceptance of the total Project.

1.20-1.05.08—Facilities Construction - Schedules and Reports: When a project coordinator is not required by the Contract the following shall apply:

Baseline Bar Chart Construction Schedule: Within 20 calendar days after contract award the Contractor shall develop a comprehensive bar chart as a baseline schedule for the project. The bar chart schedule shall be submitted to the Engineer for approval and shall be based on the following guidelines:

1. The bar chart schedule shall contain a list of activities that represents the major activities of the project. At a minimum, this list should include a breakdown by individual structure or stage, including major components of each. The bar chart schedule shall contain sufficient detail to describe the progression of the work in a comprehensive manner. As a guide, 10 to 15 bar chart activities should be provided for each $1 million of contract value.

The following list is provided as an example only and is not meant to be all-inclusive or all-applicable:

General Activities Applicable to all projects

Project Constraints

- -Winter shutdowns
- -Environmental permits/application time of year restrictions
- -Milestones
- -Third Party approvals
- -Long lead time items (procurement and fabrication of major elements)
- -Adjacent Projects or work by others

Award
Notice to Proceed
Signing (Construction, temporary, permanent by location)
Mobilization
Permits as required
Field Office
Utility Relocations
Submittals/shop drawings/working drawings/product data
Construction of Waste Stock pile area
Clearing and Grubbing
Earthwork (Borrow, earth ex, rock ex etc.)
Traffic control items (including illumination and signalization)
Pavement markings
Roadway Construction (Breakdown into components)
Drainage (Breakdown into components)
Culverts
Plantings (including turf establishment)
Semi-final inspection
Final Cleanup

As required the following may supplement the activities listed above for the specific project types indicated:

a. For bridges and other structures, include major components such as abutments, wingwalls, piers, decks and retaining walls; further breakdown by footings, wall sections, parapets etc.

Temporary Earth Retention Systems
Cofferdam and Dewatering

Structure Excavation
Piles/test piles
Temporary Structures
Removal of Superstructure
Bearing Pads
Structural Steel (Breakdown by fabrication, delivery, installation, painting etc.)
Bridge Deck

b. Multiple location projects such as traffic signal, incident management, lighting, planting and guiderail projects will be broken down first by location and then by operation. Other major activities of these types of projects should include, but are not limited to:

Installation of anchors
Driving posts
Foundations
Trenching and Backfilling
Installation of Span poles/mast arms
Installation of luminaries
Installation of cameras
Installation of VMS
Hanging signal heads
Sawcut loops
Energizing equipment

c. Facility Projects – Facilities construction shall reflect the same breakdown of the project as the schedule of values:

Division 2 – Existing Conditions
Division 3 – Concrete
Division 4 – Masonry
Division 5 – Metals
Division 6 – Wood, Plastic, and Composites
Division 7 – Thermal and Moisture Protection
Division 8 – Openings
Division 9 – Finishes
Division 10 – Specialties
Division 11 – Equipment
Division 12 - Furnishings
Division 13 – Special Construction
Division 14 – Conveying Equipment
Division 21 – Fire Suppression
Division 22 – Plumbing
Division 23 – Heating, Ventilating, and Air Conditioning
Division 26 – Electrical

Division 27 – Communications
Division 28 – Electronic Safety and Security
Division 30 – Site Work
Division 31 – Earthwork
Division 32 – Exterior Improvements
Division 33 - Utilities

2. If the Engineer determines that additional detail is necessary, the Contractor shall provide it.

3. Each activity shall have a separate schedule bar. The schedule timeline shall be broken into weekly time periods with a vertical line to identify the first working day of each week.

4. The bar chart schedule shall show relationships among activities. The critical path for the Project shall be clearly defined on the schedule. The schedule shall show milestones for major elements of work, and shall be prepared on a sheet, or series of sheets of sufficient width to show data for the entire construction period**.**

5. If scheduling software is used to create the bar chart schedule, related reports such as a predecessor and successor report, a sort by total float, and a sort by early start shall also be submitted.

6. Project activities shall be scheduled to demonstrate that the construction completion date for the Project will occur prior to expiration of the Contract time. In addition, the schedule shall demonstrate conformance with any other dates stipulated in the Contract.

7. The Contractor is responsible to inform its subcontractor(s) and supplier(s) of the Project schedule and any relevant updates.

8. There will be no direct payment for furnishing schedules, the cost thereof shall be considered as included in the general cost of the work.

Monthly Updates: No later than the 10th day of each month, unless directed otherwise by the Engineer, the Contractor shall deliver to the Engineer three (3) copies of the schedule to show the work actually accomplished during the preceding month, the actual time spent on each activity, and the estimated time needed to complete any activity which has been started but not completed. Each time bar shall indicate, in 10% increments, the estimated percentage of that activity which remains to be completed. As the Project progresses, the Contractor shall place a contrasting mark in each bar to indicate the actual percentage of the activity that has been completed.

The monthly update shall include revisions of the schedule necessitated by revisions to the Project directed by the Engineer (including, but not limited to extra work), during the month preceding the update. Similarly, any changes of the schedule required due to changes in the Contractor's planning or progress shall also be included. The Engineer reserves the right to reject any such revisions. If the schedule revisions extend the contract completion date, due to extra or added work or delays beyond the control of the Contractor, the Contractor shall submit a request in writing for an extension of time in accordance with Article 1.20-1.08.08. This request shall be supported by an analysis of the schedules submitted previously.

Any schedule revisions shall be identified and explained in a cover letter accompanying the monthly update. The letter shall also describe in general terms the

progress of the Project since the last schedule update and shall identify any items of special interest.

If the Contractor fails to provide monthly schedule updates, the Engineer has the right to hold 10% of the monthly estimated payment, or $5,000, whichever is less, until such time as an update has been provided in accordance with this provision.

Biweekly Schedules: Each week, the Contractor shall submit to the Engineer a two week look-ahead schedule. This short-term schedule may be handwritten but shall clearly indicate all work planned for the following two week period.

Recovery Schedules: If the updated schedule indicates that the Project has fallen behind schedule, the Contractor shall either submit a time extension request in accordance with Article 1.20-1.08.08 or immediately institute steps acceptable to the Engineer to improve its progress of the Project. In such a case, the Contractor shall submit a recovery plan, as may be deemed necessary by the Engineer, to demonstrate the manner in which an acceptable rate of progress will be regained.

Daily Construction Reports: The Project Superintendent shall assist the Engineer in the preparation of a daily construction report, by ensuring that each of the Contractor's employees and subcontractors working on the Project Site on a given day signs the Engineer's sign-in sheet for that day; and by keeping and providing to the Engineer its own daily list of employees and subcontractors who worked on the Project Site on that day.

1.20-1.05.09—Facilities Construction - Authority of Inspectors: Inspectors employed by the Department are authorized to inspect all work done and all materials furnished for Project construction. Such inspection may extend to any part of the Project work, and to the preparation or manufacture of the materials to be used for same. In case of any dispute arising between the Contractor and the inspector as to materials furnished or the manner of performing work, the inspector has the authority to reject material or stop the work until the question at issue can be referred to and decided by the Engineer. The inspector is not authorized to revoke, alter, enlarge, relax, or release any requirements of the Contract nor to approve or accept any portion of the Contract work, nor to issue instructions contrary to the Contract. The inspector shall in no case act as a foreman, or fulfill other duties for the Contractor. Any advice that the inspector may give to the Contractor shall not be construed as binding the Department in any way, nor as releasing the Contractor from its obligation to fulfill the terms of the Contract.

The conducting, failure to conduct, sufficiency, or accuracy of any inspection does not relieve the Contractor of its responsibility to perform the Project work properly, to monitor its work and the work of its subcontractors, and to institute and maintain quality control procedures appropriate for the proper execution of Project work.

1.20-1.05.10—Facilities Construction - Inspection: All materials and each part or detail of the Project work shall be subject at all times to inspection by the Engineer. Such inspection may include mill, plant, shop or other types of inspection; and any material furnished under the Contract is subject to such inspection. The Engineer shall be allowed access to all parts of the work and shall be furnished with such information

and assistance by the Contractor as the Engineer deems necessary to make complete, detailed and timely inspections.

The Contractor shall always notify the Engineer of its intention to perform work on the Project, including the nature of the particular work it intends to perform, at least 3 calendar days before the Contractor commences that work. If, after receiving such notice, the Engineer decides that he needs more than 3 calendar days to arrange for and conduct inspection related to that work, he shall so notify the Contractor, and the Contractor shall refrain from commencing the work until the Engineer has arranged for such inspection. The Contractor may not commence any portion of its work without prior related inspection by the Engineer unless the Engineer agrees otherwise. In the absence of such advance agreement by the Engineer, any work done or material used without inspection by a Department representative may be ordered exposed for examination and testing, and then corrected or restored, all at the Contractor’s expense.

If, at any time before the Department's acceptance of the Project, the Engineer requests the Contractor to remove or uncover any portion of the Project work for inspection by the Engineer, the Contractor shall do so. After such inspection is completed, the Contractor shall restore such portions of the work to the condition required by the Contract as construed by the Engineer. If the work or material exposed and inspected under this provision proves acceptable to the Engineer, the Department shall pay the Contractor for any removal, uncovering or restoration of its previous Contract work. The Department shall pay the Contractor for such removal, uncovering, and restoration of the prior work as extra work. If the work or material exposed and inspected proves, in the opinion of the Engineer, not to conform to Contract requirements, the Contractor shall be responsible for the costs of the removal, uncovering, correction and restoration of the work and material in accordance with the Contract or as the Engineer requires.

For work requiring inspection by a building or fire code official, the Contractor shall provide a minimum 3 calendar days, excluding weekends and State holidays, notice to the Engineer to perform such inspection. The Contractor shall not enclose, cover, or impair any system or component that will require inspecting, testing, or viewing for compliance with the codes defined in Article 1.20-1.02.13.

1.20-1.05.11—Facilities Construction - Removal of Defective or Unauthorized Work: Work that does not conform to the requirements of the Contract shall be remedied in a manner acceptable to the Engineer or removed and replaced at the Contractor's expense in a manner acceptable to the Engineer.

No work shall be done without appropriate lines and grades having been established in the field. Work done contrary to the instructions of the Engineer, work done beyond the lines shown on the plans, or extra work done without the Engineer's prior written direction to perform it will be considered as unauthorized and the Department will not pay for it. Work so done may be ordered removed or replaced at the Contractor's expense.

If the Contractor fails to comply with any order of the Engineer made under the provisions of this Article, the Engineer has the authority to cause unacceptable or unauthorized work to be remedied or removed and replaced by a party or parties other

than the Contractor, and to deduct the costs of such activities from any monies due or to become due to the Contractor from the Department or any other agency of the State.

The Contractor shall remove all materials that have a probability of containing asbestos if they failed to provide the manufacturer certification letter required by Article 1.20-1.05.02 unless a manufacturer certification letter is provided and is acceptable to the Designer. The Contractor shall remove all asbestos containing material that is found to have been installed. The Contractor shall replace the removed material with appropriate material. The Contractor shall pay for any asbestos testing charges the Department incurred in order to prove that the material contains asbestos fibers. This obligation will extend throughout the one year warranty period after the issuance of the Certificate of Compliance.

1.20-1.05.12—Facilities Construction - Payrolls: For each week of the Project from the first week during which an employee of the Contractor does Project work to which prevailing wage requirements apply, until the last week on which such an employee does such work, the Contractor shall furnish to the Engineer certified copies of payrolls showing

(a) the names of the employees who worked on the Project and whose work is subject to prevailing wage requirements,
(b) the specific days and hours and numbers of hours that each such employee worked on the Project, and
(c) the amount of money paid to each such employee for Project work.

Each such payroll shall include the statement(s) of compliance with prevailing wage laws required by the State of Connecticut and, if applicable, by the Federal government. Said payrolls must contain all information required by CGS Section 31-53 (as it may be revised). For contracts subject to Federal prevailing wage requirements, each payroll shall also contain the information required by the Davis Bacon and Related Acts (DBR). All of the payroll requirements in this Article shall also apply to the work of any subcontractor or other party that performs work on the Project site, and the Contractor shall be responsible for ensuring that each such party meets said requirements.

Every Contractor or subcontractor performing Project work is required to post the relevant prevailing wage rates as determined by the State Labor Commissioner and, on federal aid projects, those determined by the United States Secretary of Labor. The wage rate determinations shall be posted in prominent and easily accessible places at the work site.

1.20-1.05.13—Facilities Construction - Examining and Copying Contractor's Records: The Contractor shall permit the Department and its duly-authorized representatives to examine and copy all documents and other records of the Contractor that are relevant to charges for extra work, alleged breaches of Contract, or any formal or informal claim for additional compensation or for damages in connection with the Project.

With the exception noted below, the Contractor shall also permit the Department to examine and copy such of its documents and other records pertaining to the Project as the Department may deem necessary in order to determine whether or not the

Contractor has complied with all laws, regulations and other governmental mandates, e.g., those relating to labor compliance, affirmative action programs, and equal employment opportunity. Documents and other records relating to the Project, if they were created prior to the opening of bids for the Contract, and if they are sought by the Department only for the purpose of confirming such compliance with legal requirements, shall, however, not be subject to examination by the Department pursuant to this Article without the consent of the Contractor.

The Contractor further agrees that it shall keep all documents and other records relating to the Project at least until the expiration of 3 years after the date of acceptance of the Project by the Department, as designated in a "Certificate of Acceptance of Work and Acceptance of Project" (CON-13), issued by the Department. If any claims are brought by the Department or the Contractor prior to that expiration, however, the Contractor shall keep all such records until the Department has given the Contractor a full and final release from all pending and potential claims regarding the Project. If the Contractor does not so keep any such records, it may not assert any formal or informal claim for compensation or damages that could have been substantiated or disproven with such records.

The Contractor shall ensure that the requirements of this provision are made applicable to its subcontractors and suppliers, for the State's benefit, by including the operative language of this Article in its Project subcontracts and purchase agreements.

1.20-1.05.14—Facilities Construction - Termination for Convenience Clause: The State may terminate the Contract whenever the Engineer determines that such termination is in the best interests of the State. Any such termination shall be effected by delivery to the Contractor of a written Notice of Termination specifying the extent to which performance of work under the Contract is terminated and the date upon which said termination shall be effective.

In the case of such a termination, the Department will pay the Contractor at the Contract unit prices for the actual number of units or items of Contract work completed prior to the effective date of termination, or as may be agreed by the parties for such items of work partially completed. No claim for loss of overhead or anticipated profits shall be allowed.

When the volume of work completed is too small to compensate the Contractor under Contract unit prices for its related expenses, the Department may consider reimbursing the Contractor for such expenses.

Materials obtained by the Contractor for the Project, if they have been inspected, tested as required, and accepted by the Engineer, but have not been incorporated into the Project construction, shall, if the Engineer and the Contractor so agree, be purchased by the Department from the Contractor at their actual cost as shown by receipted bills. To this cost shall be added all actual costs for delivery at such points of delivery as may be designated by the Engineer, as shown by actual cost records. If the Engineer does not agree to purchase such materials, the Department shall reimburse the Contractor for any reasonable restocking fees and handling costs incurred by the Contractor in returning said materials to the vendor.

Termination of the Contract shall not relieve the Contractor of its responsibilities for the completed Project, nor shall it relieve the Contractor's surety of its obligation concerning any claims arising out of the work performed, until the requirements of Articles 1.20-1.08.13 and 1.20-1.08.14 have been met.

1.20-1.05.15—Facilities Construction - Markings for Underground Facilities: In conformance with Section 16-345 through 16-359 of the Regulations of the PURA, the Contractor is responsible for notifying “Call Before You Dig” prior to commencing any excavation, including milling, reclamation or trenching; and the Contractor shall install a warning tape located a minimum of 12 inches above all conduits, wires, cables, utility pipes, drainage pipes, underdrains, or other facility, unless the excavation’s depth, other underground facilities, or other engineering considerations make this minimum separation unfeasible. The warning tape shall be of durable impervious material, designed to withstand extended underground exposure without material deterioration or fading of color. The tape shall be of the color assigned to the type of facility for surface markings and shall be durably imprinted with an appropriate warning message. The tape shall also comply with the specific requirements of the utility that owns the facility.

All tapes, unless otherwise directed by the specific utility, shall be detectable to a depth of at least 3 feet with a commercial radio-type metal locator.

Assigned colors are:

Green—Storm and sanitary sewers and drainage systems, including force mains and other non-hazardous materials

Blue—Water

Orange—Communication lines or cables, including, but not limited to, those used in, or in connection with, telephone, telegraph, fire signals, cable television, civil defense, data systems, electronic controls and other instrumentation

Red—Electrical power lines, electrical power conduits and other electrical power facilities, traffic signals and appurtenances and illumination facilities

Yellow—Gas, oil petroleum products, steam, compressed air, compressed gases and all other hazardous material except water

Brown—Other

Purple—Radioactive materials

Payment for warning tapes shall be included in the bid price for the pay item of the specific facility for which the tape is used.

1.20-1.05.16—Facilities Construction - Dimensions and Measurements: The Contractor or one of its subcontractors shall verify each dimension that is needed in order to ensure that its work complies with the Contract, and must do so before ordering any material or doing any work for which such dimension is needed. Such dimensions include, but are not limited to, dimensions given on the plans, as well as dimensions of structures in place prior to Project construction or installed in the course of construction. The Contractor or any subcontractor that finds a discrepancy or error in dimensions must report it promptly to the Engineer and may proceed with affected work only after receiving clarification and direction from the Engineer regarding the matter. Any costs

for delays, changes, cutting or repairs that are incurred due to the Contractor's failure to observe the above requirements shall be borne by the Contractor.

1.20-1.05.17—Facilities Construction - Welding: The Contractor shall ensure that all welding of materials permanently incorporated into the work, and welding of materials used temporarily during construction of the work is performed in accordance with the following codes:

- AWS Structural Welding Code – Steel – ANSI/AWS D1.1: Miscellaneous steel items that are statically loaded including but not limited to columns, and floor beams in buildings, railings, sign supports, cofferdams, tubular items, and modifications to existing statically loaded structures.
- AWS Structural Welding Code – Aluminum – AWS D1.2/D1.2M: Any aluminum structure or member including but not limited to brackets, light standards, and poles.
- AWS Structural Welding Code – Sheet Steel – AWS D1.3/D1.3M: Sheet steel and cold-formed members 0.18 in or less in thickness used as, but not limited, to decking and stay-in-place forms.
- AWS Structural Welding Code – Reinforcing Steel – AWS D1.4/D1.4M: Steel material used in the reinforcement of cast-in-place or pre-cast Portland cement concrete elements including but not limited to bridge decks, catch basin components, walls, beams, deck units, and girders.
- AASHTO/AWS – Bridge Welding Code, AASHTO/AWS D1.5/D1.5M: Steel highway bridges and other dynamically loaded steel structures. Also includes sign supports, and any other fracture critical structure.

The edition governing the work shall be in effect on the date the Contract was advertised for solicitation of bids.

The Contractor is responsible to provide a Certified Welding Inspector in accordance with the above noted codes. The cost for this service is included in the general cost of the work.

All welders shall be certified by the Engineer in accordance with Section 6.03.

1.20-1.05.23—Facilities Construction -Requests for Information (RFI's) and Requests for Change (RFC's): The Contractor shall forward all RFIs and RFCs to the Engineer by in PDF format for review. The Engineer will forward the RFI or RFC to the Designer for review. Upon receipt of an RFI or RFC, the Designer will attempt to determine if additional information is required from the Contractor to respond to the RFI or RFC, and request said information from the Engineer.

All RFI's will be responded to within 10 calendar days of receipt by the Designer. All RFC's will be responded to within 21 calendar days of receipt by the Designer.

1.20-1.05.24—Facilities Construction -Project Meetings: In order to maximize effective use of time, and to minimize disruption during construction, the Contractor shall work closely with the Engineer to combine required meetings when possible.

1. **Pre-Construction Meetings:** The Engineer will schedule a pre-construction and

organizational meeting at the District Office or other convenient location after the Award of the Contract. At such meeting, the Engineer will review the parties' responsibilities and personnel assignments.

The Engineer, Designer, Owner, the Contractor and its project coordinator, superintendent, major subcontractors, and other concerned parties shall attend the meeting. All participants at the meeting shall be familiar with the Project and authorized to conclude matters relating to the Project.

The Engineer will distribute copies of minutes of the Pre-Construction Meeting to all attendees. The Contractor shall distribute copies to other parties who were not present at the meeting.

2. Pre-Installation Meetings: The Engineer, Designer, the Contractor's project coordinator, superintendent, the Installer, technical and field service engineering representatives of each manufacturer and fabricator involved in or affected by the installation, and other representatives required for coordination or integration of Project work or materials shall attend the scheduled Pre-Installation Meeting. All meeting participants shall be familiar with the Project and authorized to conclude matters relating to the Project.

The meeting participants shall review progress of other construction activities and preparations for the particular activity under consideration, including requirements of Contract documents, related requests for interpretations, related construction orders, purchases, deliveries, submittals, review of mockups, possible conflicts, compatibility problems, time schedules, weather limitations, manufacturer's written recommendations, warranty requirements, compatibility of materials, acceptability of substrates, temporary facilities and controls, space and access limitations, regulations of authorities having jurisdiction, testing and inspecting requirements, installation procedures coordination with other work, required performance results, protection of adjacent work, and protection of construction and personnel.

The Engineer will distribute copies of minutes of the meeting to the Designer and the Contractor. The Contractor shall distribute copies to parties who were or should have been at the meeting.

3. Progress Meetings: The Engineer will conduct progress meetings at the Project site at regularly scheduled intervals, but no less than twice a month.

The Contractor shall provide the Engineer with a detailed agenda for the proposed meeting, specifying what topics will be covered. In addition to representatives of the Engineer, the Contractor's project coordinator and superintendent, each subcontractor, supplier or other entity concerned with current progress or involved in planning, coordination or performance of future activities shall attend these meetings. All participants at the meeting shall be familiar with the Project and authorized to conclude matters relating to the Project.

At each progress meeting, the participants shall (1) review items of significance that could affect progress; (2) discuss topics appropriate to the current status of the Project; (3) review progress since the last meeting; (4) determine whether each activity is on time, ahead of schedule, or behind schedule, in relation to the Contractor's Construction Schedule; (5) determine how to expedite any Project work that may be behind schedule; (6) discuss whether or not schedule revisions are required to ensure that current and

subsequent activities will be completed within the Contract time; and (7) review the present and future needs of each entity represented at the meeting, including such items as interface requirements, time, sequences, deliveries, off-site fabrication problems, access, site utilization, temporary facilities and controls, hours of work, hazards and risks, housekeeping, quality and work standards, status of correction of deficient items, field observations, requests for interpretations, status of proposal requests, pending changes, status of construction orders, and documentation of information for payment requests.

The Contractor shall provide the Engineer, for inclusion in the meeting minutes, a brief summary of the Project's progress since the previous meeting.

The Engineer will distribute copies of minutes of the meeting to the Designer and the Contractor. The Contractor shall distribute copies to parties who were or should have been at the meeting.

4. Coordination Meetings: The Engineer will conduct Project coordination meetings as necessary, and shall follow the procedures established for progress meetings.

The Contractor shall request representation at each meeting by every party currently involved in coordination or planning for the construction activities involved.

The Engineer will record meeting results and distribute copies to everyone in attendance, the Designer, and to the Contractor to be distributed to others affected by decisions or actions resulting from each meeting.

5. Project Closeout Meeting: The Engineer will conduct a Project closeout meeting no later than 90 days prior to the anticipated expiration of Contract Time to review the requirements and responsibilities related to Project closeout.

The Engineer, Designer, Owner, the Contractor and its project coordinator, superintendent, major subcontractors, and other concerned parties shall attend the meeting. All participants at the meeting shall be familiar with Project and authorized to conclude matters relating to the Work.

The meeting participants shall discuss items of significance that could affect or delay Project closeout, including the following: (1) preparation of record documents; (2) procedures required prior to inspection for Semi-Final and Substantial Completion for acceptance; (3) submittal of written warranties; (4) requirements for preparing operations and maintenance data; (5) requirements for delivery of spare parts; (6) requirements for demonstration and training; (7) submittal procedures; (8) coordination of separate contracts or work to be performed by others; (9) Owner's partial occupancy requirements; (10) installation of Owner's furniture, fixtures, and equipment; and (11) responsibility for removing temporary facilities and controls.

The Engineer will record meeting results and distribute copies to everyone in attendance, the Designer, and to the Contractor to be distributed to others affected by decisions or actions resulting from the meeting.

SECTION 1.20-1.06
CONTROL OF MATERIALS FOR FACILITIES CONSTRUCTION

1.20-1.06.01—Facilities Construction - Source of Supply and Quality
1.20-1.06.02—Facilities Construction - Samples and Test

1.20-1.06.03—Facilities Construction - Storage
1.20-1.06.04—Facilities Construction - Defective Materials
1.20-1.06.05—Facilities Construction - Facilities Construction - Shipping Material
1.20-1.06.06—Facilities Construction - Vacant
1.20-1.06.07—Facilities Construction - Certified Test Reports and Materials Certificates
1.20-1.06.08—Facilities Construction -Warranties
1.20-1.06.25—Facilities Construction- Product Selection

1.20-1.06.01—Facilities Construction - Source of Supply and Quality: The Contractor must obtain the Engineer's approval of the source of supply for each of the materials specified in the Contract before beginning delivery of such materials to the Project site. If, at any time, the Department discovers that a source of supply that had been approved does not furnish uniform materials, or if the material from any source proves unacceptable to the Engineer, the Engineer will so notify the Contractor. Thereafter, the Contractor shall furnish only approved materials from other approved sources for the Project, and shall use such approved materials to replace any previously-furnished materials that have been rejected by the Engineer. Only materials conforming to the requirements of these specifications and approved by the Engineer shall be used for the Project.
No material that, after approval, has in any way become unfit for use shall be used for the Project.

All permanently incorporated steel and iron used in the construction of the Project must have been produced and fabricated in the United States. It is the express intent of this specification to require that all manufacturing processes for all steel and iron materials and products to be used for the Project, including the coating of steel and iron, occur within the United States, with the following exceptions:

The Contractor may request, in accordance with Section 635.410(b)(4) of Title 23 CFR, approval to include a minimal amount of foreign steel in the Project construction. This amount is defined as 1/10 of 1% of the total Contract price or $2,500.00, whichever is greater. The cost of the foreign steel or iron is defined as its Contract value when delivered to the Project site.

Additionally, the FHWA has granted a nationwide waiver of the requirements of 23 CFR 635.410, Buy America requirements, for the production of pig iron and processed, pelletized, and reduced iron ore. Items not specifically included in the waiver remain subject to the Buy America requirements. The Contractor may request the Engineer to seek from the FHWA a further waiver of said requirements, but it shall be at the sole discretion of the Engineer whether or not to seek such a waiver.

When the Contractor proposes to use materials from a source not currently approved by the Engineer, the Contractor shall submit as a prerequisite to consideration for source approval such evidence as the Engineer may request, showing that the materials from the proposed source meet the Contract requirements and will be available to the Contractor in sufficient quantity to assure continuous and satisfactory progress of the Project.

Should it become necessary after award of the Contract for the Contractor to obtain

material from sources other than those indicated in the statement on materials sources that is furnished by the Department prior to award, the Contractor shall furnish a supplementary statement and required samples of said proposed materials to the Engineer not less than 10 calendar days prior to placing an order for any such material.

For any material that requires more than one month for delivery, the Contractor shall provide the Engineer with documentary proof that said material has been ordered in sufficient time to complete the Project as planned. Failure to produce such documentary proof will result in a denial of any claim for a time extension based on late delivery of such material.

When one manufacturer's product is specified in the Contract, it shall be understood that this represents the standard required, but that a comparable product of another manufacturer may be considered as an equal and may be approved, unless the plans or special provisions indicate that no equal shall be allowed. Should a Contractor desire to use a product that he considers equal or superior to the one material specified, the Contractor shall submit for review in accordance with Article 1.20-1.05.02. Should an equal product be permitted, this shall not change any Contract requirement for a related Certified Test Report and Materials Certificate.

The identification of a manufacturer or fabricator in the Contract does not imply acceptability of products from the named entity. All products must satisfy the Contract criteria for performance, efficiency, materials, and special accessories.

To the fullest extent possible, the Contractor shall provide products of the same kind from a single source. When specified products are available only from sources that do not or cannot produce a quantity adequate to complete Project requirements in a timely manner, the Contractor shall consult with the Engineer to determine the most important product qualities before proceeding. Such qualities may include attributes such as visual appearance, strength, durability, or compatibility. When the Engineer has made such a determination, the Contractor shall select products in accordance with said determination to the fullest extent possible.

With respect to the Project, all products selected by the Contractor must be compatible with its previously selected products.

The Contractor shall place a permanent nameplate on each item of service-connected or power-operated equipment. In occupied spaces, the nameplate shall be located on an easily-accessible but inconspicuous surface. The nameplate shall contain: name of product and manufacturer, model and serial number, capacity, speed, ratings, and other essential operating data.

Except for required labels and operating data, the Contractor shall not attach or imprint manufacturer's or producer's nameplates or trademarks on exposed surfaces of products that will be exposed to view in occupied spaces or on a structure’s exterior. The Contractor shall locate required product labels and stamps on concealed surfaces or, if required for observation after installation, on accessible but inconspicuous surfaces.

1.20-1.06.02—Facilities Construction - Samples and Test: The Contractor must obtain the Engineer's approval of any sources of materials to be incorporated into the Project before beginning to use them for the Project.

Approval of material sources may be by (1) certification accepted by the Engineer, (2) written permission of the Engineer, or (3) prior approval after documented test or inspection of the source by the Department. Any Project work in which materials from unapproved sources are used may be considered unauthorized by the Engineer, and therefore not to be paid for. Materials tests or inspection from sources or material delivered to a project site, when required, will be made by and at the expense of the Department, unless otherwise noted in the Contract.

Certification may be used as the basis for approval of such materials, as the Contract documents specify or as the Engineer may require. With regard to such materials, the Contractor shall furnish the Engineer a Certified Test Report and Materials Certificate, conforming to Article 1.20-1.06.07, as may be required in the “Minimum Schedule for Acceptance Testing” for each type of material. The Contractor shall bear any costs involved in furnishing the Test Report and Certificate.

If the Contractor has purchased materials for use on a previous Department project, and if they comply with the requirements of this Contract, then those materials, with the approval of the Engineer, may be used for the Project, provided that the Contractor, acting as the materials supplier, submits a related Materials Certificate conforming to Article 1.20-1.06.07. This Materials Certificate shall further identify the project for which the material was originally purchased and shall be accompanied by a copy of the original Certificate.

Material samples required by the Department will be as indicated in the latest edition of the "Minimum Schedule for Acceptance Testing," and tests will be performed in accordance with the latest revision of the standard method of AASHTO or ASTM, or in accordance with other standards accepted by the Department which are in effect at the time of bidding, unless otherwise specified on the plans or in the special provisions. Any items not covered in the "Minimum Schedule for Acceptance Testing," special provisions, or plans shall be sampled and tested or certified, as directed by the Engineer.

The Contractor shall submit to the Engineer representative preliminary samples of any materials proposed for Project use, without charge by the Contractor or the producer of the materials. Samples submitted shall be taken by a representative of the Department or a commercial laboratory approved by the Engineer. All such materials shall be subject to inspection, testing or re-testing at the Engineer's direction at any time during their manufacturing, fabrication or use.

The Contractor shall furnish all required samples without charge, and provide secure facilities for their storage. The Contractor shall provide means for, and shall assist in the verification of, all scales, measures and other devices that it operates or uses in connection with the Project.

Materials will be rejected by the Engineer whenever, in his judgment, they fail to meet Contract requirements. The Engineer may accept material or combination of materials and thereby waive noncomplying test results, provided that the following conditions are met:

1. The Engineer finds results of prior and subsequent series of tests of the material or materials from the same source or sources to be satisfactory.

2. The incidence and degree of nonconformance with the Contract requirements are, in the Engineer's judgment, within reasonable limits.
3. The Contractor, in the Engineer's judgment, had diligently exercised material controls consistent with good practices.
4. No adverse effect on the value or serviceability of the completed work could result from said degree of nonconformance.

The Engineer may, in his discretion, waive testing of minor quantities of a particular material if said material was obtained from sources that have furnished supplies of the material that have consistently met Department testing standards.

1.20-1.06.03—Facilities Construction - Storage: The Contractor shall store all materials for the Project in a way that ensures that their quality and fitness for the Project will be preserved, and that the Engineer will have easy and prompt access to them for inspection purposes. Materials shall be kept on wooden platforms or on other hard, clean surfaces and not on the ground. When so directed by the Engineer, the Contractor shall store materials in a weatherproof building.

The Contractor shall not store materials in any way that would lead to a violation of Article 1.20-1.10.01 through 1.20-1.10.08 of these specifications. Stored materials, even if they have been approved by the Engineer prior to their storage, must be inspected by the Engineer and meet all pertinent Contract requirements immediately prior to use of those materials for the Project.

The Contractor shall (1) store products in accordance with the manufacturer's recommendations; (2) store products at the site in a manner that will facilitate inspection and measurement or counting of units; (3) store heavy materials away from Project structures so as not to endanger the supporting construction; (4) if the products are subject to damage by the elements, store them off the ground, under cover in a weatherproof enclosure, with ventilation adequate to prevent condensation; and (5) maintain temperature and humidity within any range recommended by the manufacturer.

Off-site staging and storage of materials and equipment may be required due to restrictive Project Limits and other operational constraints. Arrangement for off-site staging and storage of materials and equipment shall be the responsibility of the Contractor. Payment for off-site staging and storage of materials and equipment shall be in accordance with Article 1.20-1.09.06.

1.20-1.06.04—Facilities Construction - Defective Materials: Unless otherwise permitted by the Engineer, all materials not conforming to Contract requirements shall be considered defective, shall be rejected, and shall be removed immediately from the Project site.

If deemed necessary by the Engineer, the Engineer may require the retesting of materials previously tested, approved and incorporated into the Project. If, after such retesting, the materials are found not to conform to the Contract, the Engineer may, however, allow the Contractor to leave the materials in place, provided that an equitable reduction of the payment for the materials shall be made. No rejected material, the defects of which have been subsequently corrected, shall be used until approval for

such use has been given by the Engineer. Should the Contractor fail to comply with any order of the Engineer made under the provisions of this article, the Engineer shall have authority to remove and replace defective material, and to deduct the cost of such removal and replacement from any money due or to become due to the Contractor.

When a material is fabricated or treated with another material, or when any combination of materials is assembled to form a product, any or all of which are covered by the Contract specifications, the failure of any components of the product to comply with the specifications may be sufficient cause for the rejection of the whole combination or product.

Materials that have been shipped from approved deposits or sources of supply, but which are found to be defective upon their delivery to the Department, to the Project site, or to any testing or storage site approved by the Engineer, shall not be used for the Project.

1.20-1.06.05—Facilities Construction - Shipping Material: Any conveyance used for transporting materials must be clean when used, be in proper working condition, have a strong and substantial body that will prevent the loss of materials during transportation, and be approved by the Engineer.

1.20-1.06.06—Facilities Construction - Vacant

1.20-1.06.07—Facilities Construction - Certified Test Reports and Materials Certificates: The Contractor shall furnish the Engineer with any Certified Test Report and Materials Certificate required by the Contract or the "Minimum Schedule for Acceptance Testing."

The Contractor shall forward the Certified Test Report and Materials Certificate to the Engineer, and, in addition, shall deliver a copy of same to the Department's inspector at the Site. Materials for which such documentation is required may be conditionally incorporated into the Project prior to the Engineer’s acceptance of a Certified Test Report and a Materials Certificate; however, payment for such incorporated material will not be made prior to receipt of a Certified Test Report and Materials Certificate indicating that the materials meets the Contract requirements.

A Certified Test Report is a document containing a list of the dimensional, chemical, metallurgical, electrical and physical results obtained from a physical test of the materials involved, and shall certify that the materials meet the requirements of the Contract. Such Report shall also include the following information:

(1) Item number and description of materials
(2) Date of manufacture
(3) Date of testing
(4) Name of organization to which the material has been consigned
(5) Quantity of material represented, such as batch, lot, group, etc.
(6) Means of identifying the consignment, such as label, marking, lot number, etc.
(7) Date and method of shipment
(8) Name of organization performing tests

The Certified Test Report shall be signed by a duly-authorized and responsible agent for the organization manufacturing the materials, and the signature must be notarized.

A Materials Certificate is a document certifying that the materials, components and equipment furnished conform to all requirements of the Contract plans and specifications. Such Certificate shall also include the following information:

(1) Project for which the material has been consigned
(2) Name of Contractor to which material is supplied
(3) Item number and description of material
(4) Quantity of material represented by the certificate
(5) Means of identifying the consignment, such as label, marking, lot numbers, etc.
(6) Date and method of shipment

The Materials Certificate shall be signed by a duly-authorized and responsible agent for the organization supplying the material, and the signature must be notarized.

The Contractor shall be responsible for any testing, Materials Certificates, and inspections required under individual sections of the Special Provisions.

1.20-1.06.08—Facilities Construction - Warranties: Warranties shall be delivered to the Designer prior to acceptance of the Project.

Standard warranties are written warranties published by individual manufacturers for particular products, which are specifically endorsed by the manufacturer to the State. Special warranties are written warranties required by the Contract, either to extend time limits provided by standard warranties or to provide greater rights for the State. All required warranties shall be endorsed to, or have named as obligee, the State.

Manufacturer's disclaimers and limitations on product warranties do not relieve the Contractor of the Contractually-required warranty, that incorporates the products, nor does it relieve suppliers, manufacturers, and subcontractors required by the Contract to countersign special warranties with the Contractor.

Unless otherwise directed by the Engineer, the commencement date for warranties shall be the date of the issuance of the Certificate of Compliance. When a designated portion of the Project is completed and used by the Engineer or occupied by the Owner, by separate agreement with the Contractor during the construction period, the Contractor shall coordinate with the Engineer the submission date for properly-executed warranties and commencement date for those affected warranties. When a special warranty is required to be executed by the Contractor, or by the Contractor and a subcontractor, supplier or manufacturer, the Contractor shall prepare a written document that contains appropriate terms and identification, ready for execution by the required parties.

Written warranties made to the Engineer shall be deemed to supplement implied warranties, and shall not limit the duties, obligations, rights or remedies otherwise available under the law, nor shall warranty periods be interpreted as limitations of the time in which the Engineer can enforce such other duties, obligations, rights, or remedies.

The Contractor shall submit draft warranties for approval prior to final execution. The Engineer reserves the right to reject warranties and to limit selections to products with warranties that do not conflict with Contract requirements.

Where the Contract requires a special warranty, or similar commitment regarding the Project or part of the Project, the Engineer reserves the right to refuse to accept the related work until evidence is presented that entities required to countersign such commitments are willing to do so.

Prior to the date for the Substantial Completion Inspection, the Contractor shall compile 3 copies of each required warranty, properly executed by the Contractor or any other required party. The Contractor shall place the warranty documents in an orderly sequence based on the organization of the Contract provisions (including specific CSI-formatted specifications contained within a particular Special Provision).

The Contractor shall:

(a) Bind warranties in heavy-duty, commercial-quality, durable 3-ring vinyl-covered loose-leaf binders, thick enough to accommodate the contents, and sized to receive 8 1/2-inch x 11-inch paper paper.

(b) Identify the binder's contents on the binder's front and spine with the typed or printed title "WARRANTIES," the Project title or name, and the name of the Contractor.

(c) Provide a heavy paper divider with a tab for each separate warranty.

(d) Mark the tab to identify the related product or installation.

(e) Provide a typed description of the product or installation, including the name of the product, and the name, address and telephone number of the Contractor or pertinent subcontractor.

(f) Furnish to the Department a written warranty for all Project work accompanied by a cover letter with the following contents:

[Addressed to:]

Commissioner of Transportation
Department of Transportation
P.O. Box 317546
Newington, Connecticut 06131-7546

Project Title and Number

[We] hereby warrant all materials and workmanship for all work performed under this Contract for a period of one (1) year from [date of issuance of C.O.C.] against failures of workmanship and materials in accordance with the Contract. Furthermore, as a condition of this warranty, [we] agree to have in place all insurance coverage identified in the Contract for the performance of any warranty work.

[Signature:] [Name of authorized signatory]
[Title]

(g) Submit to the Engineer, upon completion of installation of materials or assemblies that are required to have either a flame-rating or a fire-endurance hourly rating, a detailed letter certifying that the required rating has been attained.

Upon determination by the Engineer that Project work covered by a warranty has failed, the Contractor shall replace or rebuild the work to an acceptable condition complying with Contract requirements. The Contractor is responsible for the cost of replacing or rebuilding defective construction or components and those which may have needed to be damaged or removed in order to cure the defective work including costs of material, equipment, labor, and material disposal, regardless of whether or not the State has benefited from use of the work through a portion of its anticipated useful service life. The Contractor shall respond to the Project Site when Project work covered by a warranty has failed within 3 calendar days, unless in the Engineer's opinion said failure is deemed to be an emergency, in which case the Contractor shall respond to the Project Site as directed by the Engineer.

When Project work covered by a warranty has failed and been corrected by replacement or rebuilding, the Contractor shall reinstate the warranty by written endorsement. The reinstated warranty shall be equal to the time that remains on the original warranty period at the time of the failure.

1.20-1.06.25—Facilities Construction -Product Selection: The Contractor shall provide products that comply with the Contract, that are undamaged and, unless otherwise indicated, unused at the time of installation. The Contractor shall provide products complete with accessories, trim, finish, safety guards and other devices and details needed for a complete installation and the intended use and effect. The Contractor shall provide standard products of types that have been produced and used successfully in similar situations on other projects, when such products are available, unless the Contract requires otherwise. Descriptive, performance, and reference standard requirements in the Contract provisions establish salient characteristics of products.

Contractor's options for selecting products are limited by the Contract and governing regulations, and are NOT controlled by industry traditions or procedures used by the Contractor on previous construction projects. Procedures governing product selection include the following:

(a) The Contractor shall not use product substitutes as defined in Article 1.20-1.01.01.

(b) Semi-proprietary Specification Requirements: When the Contract lists 3 or more acceptable products or manufacturers unaccompanied by the term "Or Equal," the Contractor shall provide one of the products indicated. In such a case, no "Equal" will be permitted.

(c) Non-Proprietary Specification Requirements: When the Contract lists products or manufacturers whose products are available and may be incorporated into the Project, or when the list is accompanied by the term "Or Equal," then the Contractor is not restricted to use those products, but may propose any available product that complies with Contract requirements.

(d) Descriptive Specification Requirements: When the Contract describes a product or assembly, listing exact characteristics required, with or without use of a brand or trade name, the Contractor shall provide a product or assembly that provides those characteristics and otherwise complies with the Contract.

(e) Performance Specification Requirements: When the Contract contains performance requirements, the Contractor shall provide products that comply with those requirements, and that are recommended by the manufacturer for the application indicated. Such recommendations may be derived from the manufacturer's published product literature or by the manufacturer's certification of performance.

(f) Visual Matching: When the Contract requires matching an established sample, the Engineer's decision will be final as to whether or not a proposed product matches satisfactorily. When no product available within the specified category matches satisfactorily and complies with other specified requirements, the Contractor shall comply with Contract provisions concerning "Or Equal" submissions for selection of a matching product in another product category.

(g) Visual Selection: When a Contractual product requirement includes the phrase "...as selected by the Designer from manufacturer's full range ..." or a similar phrase, the Contractor shall select a product line that complies with Contract requirements. The Designer will select the color, gloss, pattern, density, or texture from the product line that includes both standard and premium items. Bids will be based on premium items.

(h) Basis-of-Design Product Specification: A specification in which a specific manufacturer's product is named and accompanied by the words "basis-of-design," including make or model number or other designation, to establish the significant qualities related to type, function, dimension, in-service performance, physical properties, appearance, and other characteristics for purposes of evaluating comparable products of additional manufacturers.

SECTION 1.20-1.07
LEGAL RELATIONS AND RESPONSIBILTIES FOR FACILITIES CONSTRUCTION

1.20-1.07.01—Facilities Construction - Laws to Be Observed
1.20-1.07.02—Facilities Construction - Permits and Licenses
1.20-1.07.03—Facilities Construction - Proprietary Devices, Materials and Processes
1.20-1.07.04—Facilities Construction - Restoration of Surfaces Opened Pursuant to Permit or Contract
1.20-1.07.05—Facilities Construction - Load Restrictions
1.20-1.07.06—Facilities Construction - Sanitary Provisions
1.20-1.07.07—Facilities Construction - Safety and Public Convenience
1.20-1.07.08—Facilities Construction - Use of Explosives
1.20-1.07.09—Facilities Construction - Protection and Restoration of Property
1.20-1.07.10—Facilities Construction - Contractor's Duty to Indemnify the State against Claims for Injury or Damage
1.20-1.07.11—Facilities Construction - Opening of Section of Project to Traffic or Occupancy
1.20-1.07.12—Facilities Construction - Contractor's Responsibility for Work

1.20-1.07.13—Facilities Construction - Contractor's Responsibility for Adjacent Property, Facilities and Services
1.20-1.07.14—Facilities Construction - Personal Liability of Representatives of the State
1.20-1.07.15—Facilities Construction - No Waiver of Legal Rights
1.20-1.07.16—Facilities Construction - Unauthorized Use of Area(s) within the Project Site
1.20-1.07.17—Facilities Construction - Vacant
1.20-1.07.18—Facilities Construction - Use of State Property

1.20-1.07.01—Facilities Construction - Laws to Be Observed: The Contractor at all times shall observe and comply with all laws, ordinances, government bylaws, permits, regulations, orders and decrees which in any manner affect the conduct of the Contract work. The Contractor shall indemnify and save harmless the State and all of its officers, employees and agents against any claim, fine, or other liability arising from or based on the violation of any such law, bylaw, permit, ordinance, regulation, order or decree, whether by the Contractor, its subcontractors or any of their officers, employees or agents. See the third paragraph in Article 1.20-1.02.13, however, regarding conflicts between municipal law or authorities and the requirements of Project construction.

1.20-1.07.02—Facilities Construction - Permits and Licenses: Except as may be provided otherwise in a specific Contract provision or a written direction from the Engineer, the Contractor shall procure all permits and licenses, pay all charges and fees, and give all notices required by government authorities in connection with the due prosecution of the Project.

The Contractor will not be required to apply for a Building Permit from the local Building Official since the state will issue a Notice of Intent to Construct (NOIC) as the Building Permit.

The Contractor shall apply for and obtain a demolition permit from the municipality for each building to be demolished prior to initiating any demolition activities in accordance with CGS 29-401 through 29-415. Said statutes permit a waiting period from the demolition permit application to approval of not more than 90 days so the Contractor shall schedule its work accordingly.

The Contractor shall apply for and obtain the necessary permits related to the installation of wells and septic systems.

Under Connecticut law, a commercial vehicle used by a contractor or vendor in connection with the Project may be subject to Connecticut registration requirements. The CGS require such registration for any vehicle that most often is garaged in this State, or that most often leaves from and returns to one or more points within this State in the normal course of its operation. In addition, a vehicle must be registered in Connecticut if it continuously receives and discharges cargo within this State. Reciprocal registrations as allowed under CGS are acceptable for meeting the registration requirements.

Residence or domicile of the owner, lessor or lessee of the motor vehicle, or the place where the owner, lessor or lessee is incorporated or organized, shall not be a factor in

determining whether or not the vehicle must be registered in this State. Failure to register a vehicle, if the law requires it, may result in issuance of a citation for such an infraction, and also may result in administrative action by the Commissioner of Motor Vehicles.

The registration requirement applies not only to the Contractor, but also to its subcontractors, suppliers, and other agents and representatives. It is the Contractor's responsibility to ensure that such entities and individuals comply with this requirement as well. The Contractor shall maintain, on the Project Site, records that document compliance with this requirement in connection with all vehicles used for the Project.

1.20-1.07.03—Facilities Construction - Proprietary Devices, Materials and Processes: If the Contractor is required or desires to use any design, device, material or process covered by another party's license, patent, copyright or trademark, the Contractor shall provide for such use by suitable legal agreement with the license, patent, copyright or trademark holder.

The Contractor shall provide a copy of any and all such agreements to the Engineer.

If the Contractor is allowed, but not specifically required by the Engineer, to use any particular proprietor's design, device, material or process covered by license, patent, copyright or trademark, the Contractor and its surety shall indemnify and save harmless the State from any and all claims that may be brought against the State, and any and all costs, expenses, and damages that the State may be obligated to pay by reason of any infringement or alleged infringement relating to the use of such licensed, patented, copyrighted or trademarked design, device, material or process at any time during the prosecution or after the completion of the Project.

1.20-1.07.04—Facilities Construction - Restoration of Surfaces Opened Pursuant to Permit or Contract: The Contractor shall not make, and shall not allow any person to make, an opening in a highway unless written and duly-authorized permission to do so has been obtained from the Department. If at any time prior to the completion of the Project, the Contractor should make such an opening without such permission, the Contractor shall perform all restoration necessary to close said opening, at its own expense, if the Engineer directs it to do so.

1.20-1.07.05—Facilities Construction - Load Restrictions

(a) Vehicle Weights: This subarticle will apply to travel both on existing pavements and pavements under construction. The Contractor shall comply with all legal load restrictions as to vehicle size, the gross weight of vehicles, and the axle weight of vehicles while hauling materials. Throughout the duration of the Contract, the Contractor shall take precautions to ensure existing and newly installed roadway structures and appurtenances are not damaged by construction vehicles or operations.

Unless otherwise noted in Contract specifications or plans, on and off road equipment of the Contractor, either loaded or unloaded, will not be allowed to travel across any bridge or on any highway when such a vehicle exceeds the statutory limit or posted limit of such bridge or highway. Should such movement of equipment become necessary the Contractor shall apply for a permit from the Department for such travel, as provided

in the CGS. The movement of any such vehicles within the Project limits or detour routes shall be submitted to the Engineer for Project record. Such permit or submittal will not excuse the Contractor from liability for damage to the highway caused by its equipment.

The Contractor is subject to fines, assessments and other penalties that may be levied as a result of violations by its employees or agents of the legal restrictions as to vehicle size and weight.

(b) Storage of Construction Materials/Equipment on Structures: Storage is determined to be
non-operating equipment or material. The Contractor shall not exceed the statutory limit or posted limit for either an existing or new structure when storing materials and/or construction equipment. When a structure is not posted, then the maximum weight of equipment or materials stored in each 12 foot wide travel lane of any given span shall be limited to 750 pounds per linear foot combined with a 20,000 pound concentrated load located anywhere within the subject lane. If anticipated storage of equipment or material exceeds the above provision, then the Contractor shall submit its proposal of storage supported by calculations stamped by a Professional Engineer registered in the State of Connecticut, to the Engineer for approval 14 days prior to the storage operation. Operations related to structural steel demolition or erection shall follow the guidelines under Section 6.03. All other submittals shall include a detailed description of the material/equipment to be stored, the quantity of storage if it is stockpiled materials, the storage location, gross weight with supporting calculations if applicable, anticipated duration of storage and any environmental safety, or traffic protection that may be required. Storage location on the structure shall be clearly defined in the field. If structures are in a state of staged construction or demolition, additional structural analysis may be required prior to authorization of storage.

1.20-1.07.06—Facilities Construction - Sanitary Provisions: The Contractor shall provide and maintain in a neat and sanitary condition such accommodations for the use of its employees as may be necessary to comply with the regulations and other requirements of the State Department of Public Health or of other bodies or tribunals having jurisdiction over such matters.

The Contractor may not use the State's existing toilet facilities.

1.20-1.07.07—Facilities Construction - Safety and Public Convenience: The Contractor shall conduct the Project work at all times in such a manner as to ensure the least possible obstruction to traffic. In a manner acceptable to the Engineer, the Contractor shall provide for the convenience and interests of the general public; the traveling public; parties residing along or adjacent to the highway or Project site; and parties owning, occupying or using property adjacent to the Project site, such as commuters, workers, tenants, lessors and operating agencies.

Notwithstanding any other Contract provision, the Contractor shall not close to normal pedestrian or vehicular traffic any section of road, access drive, parking lot, sidewalk, station platform, railroad track, bus stop, runway, taxiway, occupied space within a site, or occupied space within a building, except with the written permission of the Engineer.

All equipment, materials, equipment or material storage areas, and work areas must be placed, located, and used in ways that do not create a hazard to people or property, especially in areas open to public pedestrian or vehicular traffic. All equipment and materials shall be placed or stored in such a way and in such locations as will not create a hazard to the traveling public. In an area unprotected by barriers or other means, equipment and materials must not be stored within the clear zone of any traveled way. Clear zones are based on design speed and roadway geometry. The following minimum distances, measured from edge of travelway to the temporary hazard, are recommended:

Posted Speed Limit, mph	**Distance, feet**
55 or more	30
45 to 55	24
under 45	16

The Contractor must always erect barriers and warning signs between any of its work or storage areas and any area open to public, pedestrian, or vehicular traffic. Such barriers and signs must comply with all laws and regulations, including any applicable codes.

The Contractor must arrange for temporary lighting, snow and ice removal, security against vandalism and theft, and protection against excessive precipitation runoff within its Project work and storage areas, and within other areas specifically designated in the Contract.

In addition to meeting the requirements of Article 9.71, the Contractor shall take all precautions necessary and reasonable for the protection of all persons, including, but not limited to, employees of the Contractor or the Department, and for the protection of property, until the Engineer notifies the Contractor in writing that the Project or the pertinent portion of the Project has been completed to the Engineer’s satisfaction. The Contractor shall comply with the safety provisions of applicable laws, including building and construction codes and the latest edition of the CFR. The Contractor must make available for reference in its field office, throughout the duration of the Project, a copy of the Safety Plan and the latest edition, including all supplements, of the CFR pertaining to OSHA.

The Contractor shall furnish to the Engineer's representative supervising the Project a report on any accident that occurs on the Project site with regard to which the Contractor is required to report under OSHA or any other legal requirement. The Contractor shall also furnish to the Engineer a report regarding any other accident involving public liability or property damage in connection with the Project. The form and detail of such reports must be acceptable to the Engineer.

The Contractor shall designate a competent representative with authority to act in cooperation with the Department in the enforcement of safety provisions and promotion of safe practices on and related to the Project throughout the duration of the Project.

Before beginning work on the Project, the Contractor shall have a Safety Plan on file with the Department. The Safety Plan shall include the policies and procedures necessary for the Contractor to comply with OSHA and other pertinent regulatory rules, regulations and guidelines. The Safety Plan may be a comprehensive company-wide

plan provided it addresses the scope and type of work contemplated by the Contract. The Safety Plan shall address all the requirements of this Section and any applicable State or Federal regulations, and shall be revised and updated as necessary.

The following elements shall be included in the Safety Plan:

1. General introduction describing the scope and applicability of the Safety Plan.
2. Identification of key staff responsible for the implementation and monitoring of the Contractor's Safety Plan, and their roles and responsibilities for safety.
3. Training requirements relative to safety.
4. Safety rules and checklists specific to the types of work generally performed by the Contractor.
5. Record-keeping and reporting requirements.
6. Identification of special hazards related to specific work elements.

The Contractor is responsible for the Safety Plan. Pursuant to Article 1.20-1.07.10, the Contractor shall indemnify, and save harmless the State from any and all liability related to any violation of the Safety Plan.

Under Article 1.20-1.08.06, the Engineer may suspend the work of the Contractor if and when the latter does not take the safety precautions referenced in this article. Nothing herein shall be construed, however, to relieve the Contractor from responsibility for the prosecution of the Project.

1.20-1.07.08—Facilities Construction - Use of Explosives: To the extent possible, the Contractor shall avoid using explosives in proximity to existing structures. When the use of explosives is necessary for the prosecution of the Project, the Contractor shall take the utmost care not to endanger life or property.

The Contractor shall take adequate protective measures when engaging in blasting operations, and shall be responsible for any damage resulting from such operations.

The Contractor shall notify each utility with facilities in proximity to the site of such blasting operations, and any other individuals and entities that may be affected thereby, of the Contractor's intention to use explosives; and such notice shall be given sufficiently in advance of any blasting to enable such affected parties to take steps to prevent such blasting from injuring persons or property. Such notice shall not relieve the Contractor of responsibility for damage resulting from its blasting operations.

1.20-1.07.09—Facilities Construction - Protection and Restoration of Property: The Contractor shall not enter upon private property for any purpose without having obtained written permission to do so from the owner of such property and having provided the Engineer with a copy of same. The Contractor shall use every reasonable precaution to avoid disturbing or damaging public or private property, including, but not limited to, trees and monuments. The Contractor shall use suitable precautions to avoid disturbing or damaging underground or overhead structures or facilities, whether or not they are shown on the plans.

If the Project requires the moving or removal of a land monument or property marker, the Contractor shall not disturb it until a duly-authorized agent of the public or private property's owner has witnessed or recorded the monument or marker's location. The

Contractor shall not move or remove such property until and unless directed to do so by the Engineer.

The Contractor shall not remove, cut, injure or destroy trees or shrubs without the Engineer's prior approval.

The Contractor shall be responsible for all damage to property resulting from any act, omission, neglect or misconduct in the Contractor's manner or method of executing its work, or due to its defective work or materials. When or where any direct or indirect damage is done to public or private property by or on account of any act, omission, neglect, or misconduct in the execution of the Project work, the Contractor shall restore, at its own expense, such property to a condition as close as possible to that which existed before such damage was done, by repairing, rebuilding or otherwise restoring the property, as may be directed by the Engineer; or the Contractor shall make good such damage in another manner acceptable to the Engineer. If the Contractor fails to restore such property or make good such damage in a way acceptable to the Engineer, the Engineer may, upon 48 hours' notice, proceed to have such property repaired, rebuilt or restored as he may deem necessary; and the cost thereof will be deducted from any monies due or which may become due the Contractor under the Contract or under any other contract(s) that the Contractor may have with the State.

The Engineer shall mark the locations of underground facilities belonging to the State when given 3 calendar days (excluding Saturdays, Sundays, and State holidays) notice by the Contractor that it will be excavating or driving material into the ground near such facilities as a part of necessary Contract work. After the Engineer marks the location of such facilities, it will be the Contractor's responsibility to maintain the location markers until no longer needed. Repairs of State facilities located further than 1 ft from the line delineated by such markers shall be paid for by the State.

1.20-1.07.10—Facilities Construction - Contractor's Duty to Indemnify the State against Claims for Injury or Damage: The Contractor shall indemnify and save harmless the State, the Department and all of its officers, employees and agents from all suits, actions or claims of any character, name or description brought for or on account of any injury or damage caused to any person or property as a result of, in connection with, or pursuant to the performance of the Contract, including all costs incurred by the State in defending itself against such claims or actions, in proportion to the extent that the Contractor is held liable for same by an arbiter of competent jurisdiction. As much of any money that may be due the Contractor under the Contract as the Commissioner considers necessary for the purpose of such indemnification or holding the State harmless may be retained for such use by the State; and the Contractor's surety bonds may be held until such suit or suits, action or actions, claim or claims, as aforesaid, shall have been settled and until the Contractor has furnished to the Commissioner suitable evidence to that effect. Such indemnity shall not be limited by reason of any insurance coverage required under the Contract.

1.20-1.07.11—Facilities Construction - Opening of Section of Project to Traffic or Occupancy: Whenever, in the opinion of the Engineer, any portion of the Project has been substantially completed, it may be opened to traffic or occupancy as directed by

the Engineer. The Engineer's approval of any such opening shall not be held to be in any way an acceptance of such completed portion of the Project, or as a waiver of any of the provisions of these Specifications, or of any state or federal statutes, applicable building codes, or other Contract provisions. Such approval shall not constitute a basis for claims for damages due to interruptions to, or interference with, the Contractor's operations.

If repair or replacement of any portion of the Project construction becomes necessary because the Engineer has directed that said portion be opened to travel or occupancy prior to completion of the Contract work, the Contractor shall perform that repair or replacement. The Contractor shall perform such work at its own expense, unless the Department or an arbiter of competent jurisdiction shall determine definitely that the damage necessitating the repair or replacement was caused by equipment operated by a State employee while controlling snow or ice, or by routine State maintenance operations. In the latter cases, the State shall reimburse the Contractor for the cost of the repair or replacement. If the damage was caused by a traffic accident involving only a vehicle or vehicles that were not owned by the State and were not operated by an agent of the State, the Contractor may seek recovery from the responsible parties, but not from the State.

1.20-1.07.12—Facilities Construction - Contractor's Responsibility for Work: From the date for commencement of construction given in the "Notice to Proceed" until the date when the Engineer relieves the Contractor of responsibility for the Project, the Project construction and site shall be under the charge and care of the Contractor; and the Contractor shall take every necessary precaution against damage to the same or any part thereof by the action of the elements or from any other cause, including either execution or non-execution of Project work. The Contractor shall rebuild, repair, restore or otherwise make good, at its own expense, all damage to, or impairment of, any portion or purpose of the Project which results from any of the above causes prior to completion of the Project, except as provided in Article 1.20-1.07.11.

1.20-1.07.13—Facilities Construction - Contractor's Responsibility for Adjacent Property, Facilities and Services: The Project work shall not commence until the Contractor has made all arrangements necessary to protect all property and facilities adjacent to the Project site, including, but not limited to, those of utilities, from damaging or disruptive effects of Project operations. The Contractor shall cooperate with the owners of any underground or overhead utility lines in their removal and rearrangement operations in order that these operations may progress in a reasonable manner, that duplication of such utilities work may be kept to a minimum, and that services rendered by those parties will not be unnecessarily interrupted.

In the event of interruption of water or utility services as a result of accidental breakage of facilities, or as a result of related facilities being exposed or unsupported, the Contractor shall promptly notify the proper utility and law enforcement authorities and the Engineer of same. The Contractor shall cooperate with said authorities in the restoration of such services as promptly as possible. In no case shall the Contractor

leave the site until the interrupted service has been restored. Fire hydrants shall be kept accessible at all times, and no materials shall be left within 15 ft of any fire hydrant.

1.20-1.07.14—Facilities Construction - Personal Liability of Representatives of the State: In carrying out any of the provisions of these Specifications, or in exercising any power or authority granted by the Contract, or by law or regulation, the Commissioner, Engineer, and their authorized representatives, including consultant engineering firms and their employees, shall be subject to no liability, either personally or as officials of the State, it being understood that in all such matters they act solely as agents and representatives of the State.

1.20-1.07.15—Facilities Construction - No Waiver of Legal Rights: The Commissioner reserves the right, should the Department discover an error in the estimate, or conclusive proof of defective work done or material used by or on behalf of the Contractor, either before or after the acceptance of the Contract, or even after the final payment has been made to the Contractor, to retain and apply monies owed to the Contractor under any State contract, or to claim and recover by process of law such sums, in order to correct any error or make good any defects in the Project work or materials.

1.20-1.07.16—Facilities Construction - Unauthorized Use of Area(s) Within the Project Site: The use of any area within the Project site for any purpose other than the construction of the Project, without prior written authorization to do so from the Commissioner, is prohibited.

Any request by the Contractor for authorization of such special use must include details describing the proposed use. If the proposed special use would involve the Contractor's making any lease or any profits in connection with the proposed use, the Contractor must enter into an agreement with the State for an equitable sharing of any profits with the State before such use may be authorized.

1.20-1.07.17—Facilities Construction - Vacant

1.20-1.07.18—Facilities Construction - Use of State Property: The Contractor may not use State property for any purpose or activity other than carrying out the construction activities required by the Contract, except with the prior written consent of the Engineer.

Such other activities, which require the Engineer's advance consent, include, but are not limited to, the establishment of staging areas, storage areas, asphalt plants, concrete plants, or gravel/borrow pits; or the conduct of screening, crushing, manufacturing, or mining operations.

Any permitted use of the Project site or other State property for such other purposes or activities must be for the performance of the specific Contract only, and must be at no cost to the State. In addition, the Contractor may not assert or bring any claim or formal proceeding for damages or additional compensation based on either the approval or denial of a request to make such use of the Project site or other State property.

Under no circumstances shall the bulk storage of fuel or lubricants by the Contractor or its agents be permitted on State property. Nor shall the Contractor store any hazardous materials on State property other than those that are integral to the Contractor's performance of the Contract, as allowed by the Contract or in writing from the Engineer. The Contractor shall have the responsibility and duty to ensure the proper storage, handling, management and disposal of any such hazardous materials. The Contractor shall be liable to the Department for all remedial or punitive costs, damages or penalties incurred by the Department as a result of the Contractor's failure to fulfill this duty.

The Engineer may require environmental testing of the affected site at the Contractor's expense both prior to and upon completion of the Contractor's permitted use of the site or of other related State property. The Contractor shall be responsible for ensuring that such a site is restored to the condition required by the Engineer and that all contaminants deposited on the site by the Contractor or its agents are removed and properly disposed of. All such restoration and removal activities must be carried out at the Contractor's expense, and must be carried out in accordance with the provisions of the Department's Best Management Practices, any applicable environmental permits, and all other applicable State or Federal laws or regulations.

The Contractor must submit any request to use State property for a staging or storage area to the District Engineer at the District Construction Office. The following information, at a minimum, must accompany such written request:

(a) A detailed description of the proposed operation or use of State property.

(b) A site plan detailing the proposed location of any operations, materials, or facilities related to the requested use, including any appropriate sedimentation or erosion controls.

(c) An area plan detailing anticipated ingress to and egress from the site of the proposed activity or the Project site, as appropriate, and indicating the location of and proximity to residential or occupied buildings in the vicinity.

(d) Copies of any related, required or affected environmental permits.

(e) A detailed listing or description of the anticipated dates and hours of the proposed operations or activities.

(f) Photo documentation (a minimum of twelve 8x10-in. color photographs) (i) of the preconstruction condition of each site of the proposed activities and (ii) of adjacent property at the boundaries of those areas. If the site to be used or affected is State property that lies outside of any Department right-of-way, the Contractor must also obtain from other State agencies all necessary or appropriate authorizations for the proposed use(s) of State property.

Any request by the Contractor relating to a proposed use of State property for activities other than the establishment of a construction staging or storage area must also be submitted to the District Engineer at the District Construction Office, and must include the same information required by (a) through (f) of the preceding paragraph. In addition, in connection with such other requests, the Contractor must submit to the District Engineer:

(g) written confirmation from the municipality or municipalities in which each affected site is located that such municipality has no objection to the proposed use or activity; and

(h) a license agreement with the Department, executed by the Contractor, on terms acceptable to the Department, defining the nature and scope of the proposed use or activity.

Gore areas are not available for disposal of surplus material.

For any request to establish or operate an asphalt batching or continuous mix facility, the Contractor must also provide to the District Engineer at the District Construction Office a map detailing the outermost perimeter of the proposed facilities and operations, showing all related and potentially-affected structures, land uses, watercourses, wetlands, and other areas of environmental concern within 1/3 of a mile of the facility or operation perimeter. No such facility will be permitted on State property where any hospital, nursing home, school, area of environmental concern, watercourse, or residential housing exists within 1/3 of a mile of the perimeter of the facility or operation (as per Public Act 98-216).

SECTION 1.20-1.08
PROSECUTION AND PROGRESS FOR FACILITIES CONSTRUCTION

1.20-1.08.01—Facilities Construction - Transfer of Work or Contract
1.20-1.08.02—Facilities Construction - Establishment of Construction Field Office
1.20-1.08.03—Facilities Construction - Prosecution of Work
1.20-1.08.04—Facilities Construction - Limitation of Operations
1.20-1.08.05—Facilities Construction - Personnel and Equipment
1.20-1.08.06—Facilities Construction - Suspensions of Work Ordered by the Engineer
1.20-1.08.07—Facilities Construction - Determination of Contract Time
1.20-1.08.08—Facilities Construction - Extension of Time
1.20-1.08.09—Facilities Construction - Failure to Complete Work on Time
1.20-1.08.10—Facilities Construction - Annulment of Contract
1.20-1.08.11—Facilities Construction - Final Cleaning Up
1.20-1.08.12—Facilities Construction - Semi-Final, Substantial Completion, and Final Completion Inspections
1.20-1.08.13—Facilities Construction - Termination of the Contractor's Responsibility
1.20-1.08.14—Facilities Construction - Acceptance of Project

1.20-1.08.01—Facilities Construction - Transfer of Work or Contract: The Contractor shall perform with its own organization Contract work with a value under the Contract of at least 25% of the original total Contract value. If the Contractor sublets, sells, transfers, or otherwise disposes of any part of the Contract work without the Commissioner's prior written consent, the Contractor will not be relieved of any Contractual or other legal responsibility in connection therewith. Such an unauthorized act by the Contractor shall constitute a material breach of the Contract, and the Commissioner may, in such a case, terminate the Contract without further compensation to the Contractor.

The Contractor shall include the following alternative dispute resolution clause in all of its Project subcontracts:
"For any dispute arising out of the agreement between the Contractor and a subcontractor, including claims of late payment or non-payment, which cannot be settled within 60 days of the subcontractor submitting a written claim to the Contractor, either party may bring the dispute before an alternative dispute resolution entity for resolution. If the parties do not agree upon a particular dispute resolution entity for that purpose, the dispute shall be resolved under the auspices and construction arbitration rules of the American Arbitration Association, or under the rules of any other alternative dispute resolution entity approved by the Department either generally or for the specific dispute. The Department may not be made a party to formal arbitration regarding such a dispute. These rights and restrictions may not be waived, and if these provisions are not included in the Contractor's subcontracts for the Project, these provisions shall nonetheless be read into them."

The Contractor shall not knowingly enter into any lower-tier transaction on a Department project with any person or entity which, under any federal or state law or regulation, or by voluntary agreement, is currently debarred or disqualified from bidding for construction contracts or participating in construction projects in any jurisdiction within the United States, unless after disclosure of such ineligibility, such participation is authorized by appropriate federal and State authorities, including the Commissioner.

The Contractor shall not sublet, sell, transfer, assign, or otherwise dispose of the Contract or any portion thereof, or of the work provided for therein, or of its right, title, or interest therein, to any individual or entity without the written consent of the Commissioner. No payment will be made for such work until written consent is provided by the Commissioner.

The Contractor shall pay the subcontractor for work performed within thirty (30) days after the Contractor receives payment for the work performed by the subcontractor. Withholding retainage by the Contractor, subcontractor or lower tier subcontractors is not allowed.

Payment for work that has been performed by a subcontractor does not eliminate the Contractor’s responsibilities for all the work as defined in Article 1.20-1.07.12, “Contractor’s Responsibility for Work.”

Payment for work that has been performed by a subcontractor also does not release the subcontractor from its responsibility for maintenance and other periods of subcontractor responsibility specified for the subcontractor’s items of work. Failure of a subcontractor to meet its maintenance, warranty or defective work responsibilities may result in administrative action on future Department contracts.

For any dispute regarding prompt payment, the alternate dispute resolution provisions of this article shall apply.

The above requirements are also applicable to all sub-tier subcontractors and the above provisions shall be made a part of all subcontract agreements.

Failure of the Contractor to comply with the provisions of this section may result in a finding that the Contractor is non-responsible as a bidder for a Department contract.

1.20-1.08.02—Facilities Construction - Establishment of Construction Field Office: Prior to the start of Project construction, and within 10 calendar days after the signing of the Contract by the parties, the Contractor shall propose in writing to the Engineer a field office location. The proposal shall include the office telephone number to be used, the nearest utility pole number, and the distance from that pole to the proposed field office. The office shall be made acceptable to the Engineer and available for use, including all utility hookups, local permits and inspections, within 30 days of the Engineer's order to establish the office. Such order shall not be deemed the "Notice to Proceed."

The Contractor shall purchase one set of all building and fire codes listed in Article 1.20-1.02.13 for the Engineer's use. If any codes are not readily available, the Contractor shall provide the Engineer with a copy of the code order form along with an anticipated delivery date. At the end of the Project, the codes will remain the property of the Engineer.

1.20-1.08.03—Facilities Construction - Prosecution of Work:

1. General: The Contractor shall commence construction operations with that part of the Project designated for such commencement in the progress schedule which it has submitted to the Department, unless the Engineer directs the Contractor to commence with a different part of the Project. The work shall be conducted in such manner and with sufficient materials, equipment and labor as are necessary to ensure completion of the Project in accordance with the Contract within the time set forth in the Contract. The Contractor shall notify the Engineer of its intention to commence or recommence any Project operation at least 48 hours in advance of doing so. The Contractor shall also give the Engineer such advance notice of any intent to discontinue any Project operation, unless emergency conditions make it impracticable to give such notice so far in advance. The Engineer retains the right to disallow such commencement, recommencement or discontinuance of operations.

2. Permanent Utilities: The Contractor shall place all permanent utility services in its name until the requirements of Subarticle 1.20-1.08.13-1 are met.

3. Temporary Utilities, Services, and Facilities: All utility usage charges for the Project site for Project construction are the responsibility of the Contractor except as may be provided by the Contract. The Contractor shall place all temporary utility services in its name. Installation or use charges for temporary facilities are not chargeable to the State, and may not be used as a basis for construction orders.

The Contractor shall:

(a) Submit to the Engineer a schedule indicating the Contractor's plan for implementation and termination of each temporary utility within 21 calendar days of the Notice to Proceed.

(b) Obtain required certifications and permits for temporary utilities and submit copies of same to the Engineer as soon as each is obtained.

(c) Arrange for authorities having relevant jurisdiction to inspect and test each temporary utility before use, and after any relocation of same.

(d) Use qualified personnel for installation of temporary facilities, including subsequent relocations.

(e) Install such facilities in locations where they will serve the Project adequately and result in minimum interference with performance of the Project.

(f) Engage the appropriate utility company to install temporary service or connect to existing service. If such company provides only part of the service, the Contractor shall provide the remainder with matching, compatible materials and equipment and shall comply with the company recommendations and arrange with the company and the Engineer for a time when service may be interrupted, if necessary, to make connections for temporary services.

(g) Provide adequate utility capacity at each stage of Project construction.

(h) Prior to temporary utility availability, the Contractor shall provide trucked-in services. The Contractor shall obtain easements to bring temporary utilities to the site, where easements cannot be used for that purpose.

(i) Provide weatherproof, grounded electric power service and distribution system of sufficient size, capacity, and power characteristics during Project construction. The Contractor shall include meters, transformers, overload-protected disconnects, automatic ground-fault interrupters and main distribution switch-gear and shall install underground electric power service, except where overhead service must be used, or the Engineer directs it.

Whenever the Contractor installs an overhead floor or roof deck, the Contractor shall provide temporary lighting with local switching. The Contractor shall provide temporary lighting that will fulfill security and protection requirements, that will be adequate for construction operations and traffic conditions, and that will render signs on the Project site visible when Project work is being performed for the duration of the Project.

The Contractor shall provide temporary heat required for curing or drying activities, for protection of installed construction from adverse effects of low temperatures or high humidity, or for heating of interior building areas. The Contractor shall use safe equipment that will not have a harmful effect on elements being installed or on completed installations. The Contractor shall coordinate ventilation and temporary heating so as to produce the ambient condition required and to minimize consumption of energy. All temporary heating must comply with OSHA regulations and other applicable codes, statutes, rules and regulations. The Contractor shall bear the costs related to furnishing temporary heat as herein required, including the cost of energy.

Except when use of the permanent heating system is authorized by the Engineer, the Contractor shall provide vented, self-contained LP-gas or fuel oil heaters with individual-space thermostatic control. Use of gasoline-burning space heaters, open flame, or salamander type heating units are prohibited.

The Contractor shall install water service and distribution piping of sizes and pressures adequate for Project construction until permanent water service is in use. The Contractor shall sterilize temporary water piping prior to use.

The Contractor shall collect waste daily from the Project Site. The Contractor shall comply with requirements of NFPA 241 for removal of combustible waste material and debris. The Contractor shall not hold such materials more than 7 calendar days during normal weather or 3 calendar days when the temperature is expected to rise above 80° F. The Contractor shall handle hazardous, dangerous, or unsanitary waste materials separately from other waste by placing them in proper containers. The

Contractor shall dispose of material in a lawful manner.

The Contractor shall remove each temporary facility as authorized by the Engineer. Materials and facilities that constitute temporary facilities are the Contractor's property, unless otherwise noted in the Contract.

4. Cutting and Patching:

A. Approval Process: Well in advance of performing any cutting and patching on the Project, the Contractor shall submit to the Engineer a proposal describing the procedures that the Contractor intends to use for same.

The Contractor shall include the following information, as applicable, in the proposal:

(1) Description of the extent of cutting and patching required, how it will be performed, and an indication as to why it cannot be avoided;

(2) Changes in structural elements, operating components, and the building's appearance and other significant visual elements;

(3) List of products to be used and firms or entities that will perform Project work;

(4) Dates when cutting and patching are to be performed;

(5) List of utilities that cutting and patching procedures will affect, list of utilities that will be relocated, and list of utilities that will be temporarily rendered out of service (including duration);

(6) Where cutting and patching involves adding reinforcement to structural elements and is required due to the fault of the Contractor, details and engineering calculations prepared by a Professional Engineer registered in the State of Connecticut to show integration of reinforcement with the original structure; if such is not due to fault of the Contractor, the Designer shall supply details to show integration of reinforcement with the original structure.

Approval by the Engineer to proceed with cutting and patching does not waive the Engineer's right to later require complete removal and replacement of unsatisfactory work.

B. Protection:

(1) Structural Elements: The Contractor shall obtain approval of the cutting and patching proposal before cutting and patching any structural element, including but not limited to structural concrete, structural steel, timber and primary wood framing, and structural decking.

The Contractor shall not cut and patch structural elements in a manner that would reduce their load-carrying capacity or load-deflection ratio; or cut and patch operating elements or related components in a manner that would reduce their capacity to perform as intended, increase maintenance needs, or decrease operational life or safety.

(2) Operational Elements: The Contractor shall not cut and patch operating elements and related components in a manner that results in their reducing their capacity to perform as intended or that results in increased maintenance or decreased operational life or safety.

(3) Other Construction Elements: The Contractor shall not cut and patch miscellaneous elements or related components in a manner that could change their load-carrying capacity, that results reducing their capacity to perform as intended, or that results in increased maintenance or decreased operational life or safety.

C. Protection of Visual Elements: The Contractor shall not cut and patch construction exposed on the exterior or in occupied spaces in a manner that would, in the Engineer's opinion, reduce the building's aesthetic qualities; or cut and patch construction in a manner that would result in visual evidence of cutting and patching. The Contractor shall remove and replace any such unsatisfactory work.

If possible, the Contractor shall retain the original installer or fabricator to cut and patch exposed work. If it is impossible to engage the original installer or fabricator, the Contractor shall engage another firm acceptable to the Engineer.

D. Warranty: When replacing, patching, or repairing material or surfaces that have been cut or damaged, the Contractor shall use methods and materials in such a manner as not to void any required or existing warranties.

E. Materials: To the extent possible, the Contractor shall use materials identical to existing materials. For exposed surfaces, the Contractor shall use materials that visually match adjacent surfaces to the fullest extent possible. The Contractor shall use materials whose performance will equal or surpass that of existing materials.

F. Coordination: Before proceeding with any cutting and patching, the Contractor shall meet at the Project site with parties that will be involved in that work, including the Engineer and mechanical and electrical subcontractors, to review and resolve areas of potential interference and conflicts.

G. Preparation: The Contractor shall

(1) provide temporary support of work to be cut;
(2) protect existing construction during cutting and patching;
(3) protect such construction from adverse weather conditions where it may be exposed during cutting and patching operations; and
(4) avoid interference with use of adjoining areas or interruption of free passage to adjoining areas.

The Contractor shall avoid cutting existing pipe, conduit, or ductwork which serves the building, but which is scheduled to be removed or relocated, until adequate to bypass, replace, or discontinue those services, as applicable.

H. Performance: The Contractor shall:

(1) employ skilled workers to perform cutting and patching;
(2) proceed with cutting and patching at the earliest feasible time, and complete the work without delay;
(3) cut existing construction to provide for installation of other components or performance of other construction activities and the subsequent fitting and patching required for restoring surfaces to their original condition;
(4) cut existing construction using methods least likely to damage elements retained or adjoining construction; and
(5) review proposed procedures with the original installer and comply with the original installer's recommendations, if possible.

In general, for cutting and patching the Contractor shall:

(1) use hand or small power tools designed for sawing or grinding, not for hammering and chopping;
(2) cut holes and slots neatly to the size required, and with minimum disturbance of adjacent surfaces;

(3) temporarily cover openings when not in use;
(4) cut or drill from the exposed or finished side into concealed surfaces to avoid marring existing finished surfaces;
(5) cut through concrete and masonry using a cutting machine such as a carborundum-saw or diamond-core drill; and
(6) review any Contract provisions applicable to cutting and patching which requires excavating and backfilling.

Where services are required to be removed, relocated or abandoned, the Contractor shall:

(1) by-pass utility services such as pipe or conduit, before cutting;
(2) cut-off pipe or conduit in walls or partitions to be removed; and
(3) cap, valve, or plug and seal the remaining portion of pipe or conduit to prevent entrance of moisture or other foreign matter after bypassing and cutting.

The Contractor shall:

(1) patch with durable seams that are as invisible as possible;
(2) comply with specified tolerances;
(3) inspect patched areas to ensure integrity of the installation where feasible; and
(4) restore exposed finishes of patched areas and extend finish restoration into retained adjoining construction in a manner that will eliminate evidence of patching and refinishing.

Where removal of walls or partitions extends one finished area into another, the Contractor shall:

(1) patch and repair floor and wall surfaces in the new space;
(2) provide an even surface of uniform color and appearance;
(3) remove existing floor and wall coverings and replace with new materials, if necessary to achieve uniform color and appearance; and
(4) patch, repair or re-hang existing ceilings as necessary to provide an even plane surface of uniform appearance.

Where patching occurs in a smooth painted surface, the Contractor shall extend final paint coat over entire unbroken surface containing the patch, after the patched area has received primer and second coat.

I. Cleaning: The Contractor shall:

(1) clean areas and spaces where cutting and patching are performed or used as access;
(2) remove paint, mortar, oils, putty and similar items;
(3) clean piping, conduit, and similar features before applying paint or other finishing materials; and
(4) restore damaged pipe covering to its original condition.

5. Selective Demolition:

A. Definitions:

Remove: The Contractor shall detach materials from existing construction and legally dispose or recycle them off-site, unless indicated to be removed and salvaged or removed and reinstalled. Except for materials indicated to be reused, salvaged, reinstalled, or otherwise indicated to remain Engineer's property, demolished materials shall become Contractor’s property and shall be removed from the Project Site.

Remove and Salvage: The Contractor shall detach materials from existing construction and deliver them to Engineer. The Engineer reserves the right to identify other materials for salvage during the course of demolition.

Remove and Reinstall: The Contractor shall detach materials from existing construction, prepare them for reuse, and reinstall them where indicated.

Existing to Remain: Existing materials of construction that are not to be removed and that are not otherwise indicated to be removed, removed and salvaged, or removed and reinstalled.

B. Approval Process:

The Contractor shall submit pre-demolition photographs to the Engineer prior to the commencement of Project work to show existing conditions of adjoining construction and site improvements, including finish surfaces, that might be misconstrued as damage caused by selective demolition operations.

Well in advance of performing any selective demolition on the Project, the Contractor shall submit to the Engineer a proposal describing the procedures that the Contractor intends to use for same.

The Contractor shall include the following information, as applicable, in its proposal:

(1) detailed sequence of selective demolition and removal work with starting and ending dates for each activity while ensuring that the Engineer's on-site operations are not disrupted;
(2) interruption of utility services;
(3) coordination for shutoff, capping, and continuation of utility services;
(4) use of elevators and stairs;
(5) locations of temporary partitions and means of egress;
(6) coordination of Engineer's continuing occupancy of portions of existing building and of Engineer's partial occupancy of completed Project work; and
(7) means of protection for items to remain and items in path of waste removal from building.

The Contractor shall comply with

(1) governing EPA notification regulations before beginning selective demolition;
(2) hauling and disposal regulations of authorities having jurisdiction;
(3) ANSI A10.6; and
(4) NFPA 241.

The Engineer will conduct a Pre-Demolition Meeting at the Project site in accordance with Article 1.20-1.05.24. Said meeting will review the methods and procedures related to selective demolition including, but not limited to, the following:

(1) an inspection and discussion of the condition of construction to be selectively demolished;
(2) a review of the structural load limitations of the existing structure;
(3) a review and finalization of the selective demolition schedule and a verification of the availability of materials, demolition personnel, equipment, and facilities needed to make progress and avoid delays;
(4) a review of requirements of Project work performed by other trades that rely on substrates exposed by selective demolition operations; and
(5) a review of areas where existing construction is to remain and requires protection.

C. Repair Materials:

The Contractor shall comply with Subarticle 1.20-1.08.03-4E for repair materials and shall comply with material and installation requirements specified in other Contract provisions.

D. Examination:

The Contractor shall:

(1) verify that utilities have been disconnected and capped;
(2) survey existing conditions and correlate with requirements indicated to determine extent of selective demolition required;
(3) inventory and record the condition of items to be removed and reinstalled and items to be removed and salvaged;
(4) investigate and measure the nature and extent of unanticipated mechanical, electrical, or structural elements that conflict with intended function or design and submit a written report to Engineer; and
(5) perform surveys as the Project work progresses to detect hazards resulting from selective demolition activities.

E. Utility Services:

The Contractor shall:

(1) maintain existing utility services indicated to remain and protect them against damage during selective demolition operations;
(2) not interrupt existing utilities serving occupied or operating facilities unless authorized in writing by the Engineer;
(3) provide temporary services during interruptions to existing utilities, as acceptable to Engineer;
(4) provide at least 3 calendar days' notice to the Engineer if shutdown of service is required during changeover; and
(5) locate, identify, disconnect, and seal or cap off indicated utilities serving areas to be selectively demolished.

The Contractor shall arrange to shut off indicated utilities with utility companies. If utility services are required to be removed, relocated, or abandoned, before proceeding with selective demolition the Contractor shall provide temporary utilities that bypass area of selective demolition and that maintain continuity of service to other parts of building. The Contractor shall cut off pipe or conduit in walls or partitions to be removed and shall cap, valve, or plug and seal remaining portion of pipe or conduit after bypassing.

The Contractor shall refer to other Contract provisions for shutting off, disconnecting, removing, and sealing or capping utilities. The Contractor shall not start selective demolition work until utility disconnecting and sealing have been completed and verified by the Engineer in writing.

F. Preparation:

The Contractor shall conduct selective demolition and debris-removal operations to ensure minimum interference with adjacent occupied and used facilities on the Project site. The Contractor shall not disrupt the Owner's operations without the Engineer's permission. The Contractor shall protect existing site improvements, appurtenances, and landscaping to remain.

The Contractor shall provide temporary barricades and other protection required to prevent injury to people and damage to adjacent buildings and facilities to remain. The Contractor shall provide temporary weather protection, during interval between selective demolition of existing construction on exterior surfaces and new construction, to prevent water leakage and damage to structure and interior areas. The Contractor shall protect walls, ceilings, floors, and other existing finish work that are to remain or that are exposed during selective demolition operations. The Contractor shall cover and protect furniture, furnishings, and equipment that have not been removed.

The Contractor shall provide temporary enclosures for protection of existing building and construction, in progress and completed, from exposure, foul weather, other construction operations, and similar activities. The Contractor shall provide temporary weathertight enclosure for building exterior. Where heating is needed and permanent enclosure is not complete, the Contractor shall provide insulated temporary enclosures and shall coordinate enclosure with ventilating and material drying or curing requirements to avoid dangerous conditions and effects.

The Contractor shall erect and maintain dustproof partitions and temporary enclosures to limit dust and dirt migration and to separate areas from fumes and noise.

The Contractor shall provide and maintain interior and exterior shoring, bracing, or structural support to preserve stability and prevent movement, settlement, or collapse of construction to remain, and to prevent unexpected or uncontrolled movement or collapse of construction being demolished. The Contractor shall strengthen or add new supports when required during progress of selective demolition.

G. Pollution Controls:

The Contractor shall comply with governing regulations pertaining to environmental protection.

The Contractor shall not use water when it may create a hazardous or objectionable condition such as ice, flooding, or pollution.

The Contractor shall remove and transport debris in a manner that will prevent spillage on adjacent surfaces and areas. The Contractor shall remove debris from elevated portions of building by chute, hoist, or other device that will convey debris to grade level in a controlled descent.

The Contractor shall clean adjacent structures and improvements of dust, dirt, and debris caused by selective demolition operations. The Contractor shall return adjacent areas to condition existing before selective demolition operations began.

H. Performance:

The Contractor shall not use explosives for demolition purposes.

The Contractor shall demolish and remove existing construction only to the extent required by new construction and as indicated. The Contractor shall:

(1) proceed with selective demolition systematically;
(2) neatly cut openings and holes plumb, square, and true to dimensions required;
(3) use cutting methods least likely to damage remaining or adjoining construction;
(4) use hand tools or small power tools designed for sawing or grinding, not hammering and chopping, to minimize disturbance of adjacent surfaces;
(5) temporarily cover openings to remain;
(6) cut or drill from the exposed or finished side into concealed surfaces to avoid marring existing finished surfaces;

(7) not use cutting torches until work area is cleared of flammable materials;
(8) verify condition and contents of concealed spaces such as duct and pipe interiors before starting flame-cutting operations;
(9) maintain fire watch and portable fire-suppression devices during flame-cutting operations;
(10) maintain adequate ventilation when using cutting torches;
(11) remove decayed, vermin-infested, or otherwise dangerous or unsuitable materials and promptly dispose of off-site;
(12) remove structural framing members and lower to ground by method suitable to avoid free fall and to prevent ground impact or dust generation;
(13) locate selective demolition equipment and remove debris and materials so as not to impose excessive loads on supporting walls, floors, or framing; and
(14) dispose of demolished items and materials promptly.

The Contractor shall comply with the Engineer's requirements for using and protecting walkways, building entries, and other building facilities during selective demolition operations.

The Contractor shall demolish and remove foundations and other below grade structures completely unless otherwise indicated on the plans. The Contractor shall fill below grade areas and voids resulting from demolition of structures with granular fill materials. Prior to placement of fill materials, the Contractor shall ensure that the areas to be filled are free of standing water, frost, frozen material, trash, and debris. After fill placement and compaction, grade surface to meet adjacent contours and provide flow to surface drainage structures. Backfilling and grading related to demolition is included in the Major Lump Sum Item (MLSI) for the Project. There will be no separate payment for this backfilling and grading.

The Contractor shall (1) demolish concrete in sections; (2) cut concrete at junctures with construction to remain to the depth shown on the Contract plans and at regular intervals using power-driven saw; and (3) remove concrete between saw cuts.

The Contractor shall:
(1) demolish masonry in small sections;
(2) cut masonry at junctures with construction to remain using power-driven saw; and
(3) remove masonry between saw cuts.

The Contractor shall:
(1) saw-cut perimeter of concrete slabs-on-grade to be demolished as shown on the Contract plans; and
(2) break up and remove concrete slabs-on-grade.

The Contractor shall;
(1) remove floor coverings and adhesive according to recommendations in RFCI-WP and its Addendum; and
(2) remove residual adhesive and prepare substrate for new floor coverings by one of the methods recommended by RFCI.

The Contractor shall:
(1) only remove existing roofing in one day to the extent that it can be covered by new roofing; and

(2) refer to other Contract provisions for new roofing requirements.

The Contractor shall remove air conditioning equipment without releasing refrigerants.

I. Reuse of Building Elements:

The Contractor shall not demolish building elements beyond what is indicated on the plans without the Engineer's approval.

J. Removed and Salvaged Materials:

Unless otherwise directed by the Engineer, the Contractor shall:

(1) store materials in a secure area until delivery to the Owner;
(2) transport materials to the Owner's storage area off-site; and
(3) protect materials from damage during transport and storage.

K. Removed and Reinstalled Materials:

Unless otherwise directed by the Engineer, the Contractor shall:

(1) clean and repair materials to functional condition adequate for intended reuse;
(2) paint equipment to match the color of new equipment;
(3) protect materials from damage during transport and storage; and
(4) reinstall items in locations indicated complying with installation requirements for new materials and equipment and providing connections, supports, and miscellaneous materials necessary to make item functional for use indicated.

L. Existing Materials to Remain:

The Contractor shall protect construction indicated to remain against damage and soiling during selective demolition.

The Contractor shall drain piping and cap or plug piping with the same or a compatible piping material for piping to be abandoned in place.

The Contractor shall cap or plug ducts with the same or a compatible ductwork material for ducts to be abandoned in place.

The Contractor shall cut and remove concealed conduits and wiring to be abandoned in place 2-in below the surface of the adjacent construction, cap the conduit end, and patch the surface to match the existing finish. The Contractor shall cut existing conduits installed in concrete slabs to be abandoned in place flush with the top of the slab and fill conduit end with a minimum of 4-in of concrete.

M. Patching and Repairing:

The Contractor shall comply with Subarticle 1.20-1.08.03-4H for patching and repairing damage to adjacent construction caused by selective demolition operations.

N. Disposal of Demolished Materials:

The Contractor shall:

(1) not allow demolished materials to accumulate or be sold on the Project Site;
(2) not burn demolished materials on the Project Site; and
(3) promptly and legally dispose or recycle demolished materials off the Project Site.

1.20-1.08.04—Facilities Construction - Limitation of Operations: The Contractor shall plan and perform the Project work in such a manner and in such sequence as will cause as little interference as is practicable with vehicular, railroad, aircraft, pedestrian or other traffic. The Contractor shall cooperate with any utilities involved in or affected by the Project operations, and shall schedule its operations in accordance with Article 1.20-1.05.06.

The Contractor shall give the Engineer 7 days' advance written notice of any proposed changes in Project activities that will alter vehicular traffic patterns, causing lane shifts, detours, temporary closure of a lane, permanent closure of a lane or lane reductions, or any other alteration of railroad, aircraft, pedestrian or other traffic patterns affecting usage of such a transportation facility by the traveling public. This advance notification will allow the Department to publish news releases and provide public radio announcements to inform the public of revised traffic patterns or possible traffic delays. Failure of the Contractor to provide such timely notice will subject the Contractor to stop work orders until such time as the 7 days of required notice have run from either the Contractor's giving of the relevant notice or the Department's discovery of the pertinent alteration of traffic conditions.

1.20-1.08.05—Facilities Construction - Personnel and Equipment: The Contractor shall assign to the Project only personnel who are careful and competent. The Engineer may demand the removal of any person employed by the Contractor on the Project who is, in the opinion of the Engineer, guilty of misconduct on a Department project or incompetent or negligent in the performance of his duties on a Department project or any portion thereof, or who neglects or refuses to comply with directions given by the Engineer in connection with the Project. Following such a demand for his removal, such person shall not work again on the Project without the prior written consent of the Engineer. Should the Contractor, following such a demand for removal, continue to employ or again employ such person on any Department project without the required consent of the Engineer, the Commissioner may withhold all estimated payments that are or may become due to the Contractor for the Project, or the Engineer may shut down the Project until the Contractor has complied with the Engineer's orders concerning that person. The use of convict labor on projects funded in whole or in part by the federal government is prohibited.

The Contractor shall furnish whatever equipment is necessary for the Project to be performed in a manner and at a rate of progress that is acceptable to the Engineer. Equipment used on any portion of the Project shall not be used in any way that may cause injury to the roadway, adjacent property, or other property on or adjacent to the Project Site, unless such damage is allowed by the Engineer for the performance of the Project.

The Contractor may submit to the Engineer a request to use equipment or methods other than those specified in the Contract. If the Engineer so directs, there shall be a trial of such equipment or methods. If the results of the trial are satisfactory to the Engineer, the Contractor may begin using the proposed equipment or method on the Project. Failure of the equipment or method to meet the specified Contract performance standards in the course of the specified trial, or, in the absence of such standards, a failure to perform to the satisfaction of the Engineer, shall be cause for rejection of any such method or equipment, and any work performed with either. Such rejected equipment or work shall be removed immediately from the Project site.

The Contractor shall provide:

(a) Temporary heating units that have been tested and labeled by UL, FMG or another recognized trade association related to the type of fuel being consumed.

(b) Hand-carried, portable, UL-rated, Class ABC, dry-chemical extinguishers or a combination of extinguishers of NFPA recommended classes that comply with NFPA 10 and 241 for classification, extinguishing agent, and size required by location and class of fire exposure.

(c) The Contractor shall install a filter with a minimum MERV rating of 10 at each return air grille in the permanent HVAC system if the Engineer authorizes the use of the permanent HVAC system for temporary use during construction. The Contractor shall remove the filters prior to the Semi-Final Inspection.

1.20-1.08.06—Facilities Construction - Suspensions of Work Ordered by the Engineer: The Engineer may suspend the Project wholly or in part, for such period or periods as he considers to be in the best interests of the State, including, but not limited to, the interests of public necessity, convenience, or safety.

During such periods of suspension, and subject to any related directions from the Engineer, the Contractor shall store all materials and equipment in a way that will keep them from obstructing or impeding the traveling public unnecessarily, and that will keep the materials from being damaged; shall take all reasonable measures to prevent damage to the work performed; shall provide suitable drainage of the roadway and Project site by opening ditches, shoulder drains, etc., as appropriate; and shall erect temporary structures to prevent damage to the Project or to other property, and to protect the public, where and when necessary.

The Contractor shall maintain the Project site and all roadways and buildings thereon in a condition safe for travel or occupancy, and shall maintain all required barricades, signs, and lights during the period of suspension:

(1) If the Engineer orders in writing that performance of all or any portion of the Project shall be suspended, or that it shall be delayed for an unreasonable period of time (not customary, within the scope of possibilities that an experienced contractor should know might occur on a construction project, or inherent in the nature of construction activities), and if the Contractor believes that additional compensation or Contract time is due to it as a result of such suspension or delay, the Contractor shall submit to the Engineer in writing a request for a related Contract adjustment within 7 calendar days of the Contractor's receipt of a direction from the Engineer to resume work. The request shall set forth the specific reasons and support for the requested adjustment.

(2) Upon receipt of the Contractor's request, the Engineer will evaluate the request. If the Engineer agrees that the expenditures or time required for the Contractor's performance of the Contract have increased as a result of such suspension or delay, and if the suspension or delay was caused by conditions beyond the control of and not the fault of the Contractor, its suppliers, or subcontractors at any approved tier, and was not caused by weather, the Engineer will make an appropriate adjustment (excluding any profit) of the written terms of the Contract. The Engineer will give the Contractor written notice of his determination as to whether or not the requested adjustment of the Contract is warranted and will be made.

(3) No Contract adjustment will be made unless the Contractor has submitted the request for adjustment within the time prescribed.

(4) In addition to the other limits and requirements imposed by this article, no Contract adjustment will be allowed under this article to the extent

(a) that the Project work would have been suspended or delayed by any cause other than the ones identified in the Contractor's request, or

(b) that the requested adjustment or type of adjustment is provided for or barred by another provision of the Contract.

(With regard to Items 1-4, refer to 23 CFR, Section 635.109, "Standardized Changed Condition Clauses," Required FHWA Contract Specification.)

1.20-1.08.07—Facilities Construction - Determination of Contract Time: Unless the Contract requires the Project completion by a specified date, the number of calendar days allowed for the completion of the Project will be fixed by the Department, will be stated in the Contract, and will be known (with any subsequent adjustments) as the "Contract time." If at any time the Contractor submits a schedule showing completion of the work more than 30 calendar days in advance of the Contract completion date, the Department will issue a no-cost construction order revising the allowable Contract time to that shown on the Contractor's schedule.

When the Contract time is stated on a calendar-day basis, that time shall be the number of consecutive calendar days contained in the Contract period designated in the Contract, INCLUDING the time period from each December 1 through the following March 31. The Contract time will begin to run on the date designated in the Engineer's "Notice to Proceed" as the date for commencement of the Project, and the time will be computed as herein provided on a consecutive-day basis, including all Saturdays, Sundays, holidays, and non-work days.

The total elapsed time in calendar days, computed as described above, from the commencement date specified in the Engineer's "Notice to Proceed" to the "Substantial Completion" date specified in the Engineer's "Notice of Substantial Completion" shall be considered as the time used in the performance of the Contract work.

Suspension involving cessation of work on all items, except minor construction not affected by or connected with the cause of suspension, shall be considered as total suspension. In case of a total suspension of the Project ordered by the Engineer, not due to any fault of the Contractor, the elapsed time during which the Project is suspended will not be charged against the Contract time. Work of an emergency nature ordered by the Engineer for the convenience or safety of the public or the protection of the Project work, if performed during a period of total suspension, will not be charged against Contract time. No such time allowance will be granted in case of partial suspension; provided, however, that the Contractor may request and the Engineer may grant permission to perform specific limited operations during such a partial suspension, in which case Contract time chargeable for those operations shall be negotiated and agreed to in writing before such operations may commence.

1.20-1.08.08—Facilities Construction - Extension of Time: The Contractor may present to the Engineer a request in writing for an extension of Contract time if the time

necessary for completion of the Project has been increased due to extra or added work or delays resulting from unforeseeable causes beyond the control and without the fault or negligence of the Contractor, except for weather or seasonal conditions (unless extraordinary and catastrophic). Such causes include, but are not restricted to, natural catastrophes, acts of the State in either its sovereign or contractual capacity, acts of another contractor in the performance of a contract with the State, the presence of utility facilities (including railroads), fires, strikes, floods, or delays by suppliers arising from unforeseeable causes beyond the control and without the fault or negligence of either the Contractor or such suppliers.

The Contractor's plea that insufficient Contract time was allowed under the Contract before commencement of the Project is not a valid reason for extending the Contract time. Requests for an extension of time, with adequate substantiation, must be presented within 60 calendar days from the event that is the basis of the request or from the first effect of such an event on the Project. The Contractor will be responsible for providing all the documentation necessary to support the reasonableness of the additional time requested.

Such requests will be considered by the Engineer and granted to the extent that he deems to be fair and reasonable. Requests will not be considered if based on delays caused by conditions existing at the time the bids were received and of which the Contractor might reasonably be expected to have had full knowledge at that time, or upon delays caused by failure on the part of the Contractor to anticipate properly the requirements of the Project as to materials, labor or equipment. For all Project delays or time increases, except as provided below, additional Contract time is the sole remedy that the Contractor may have, and such periods of additional Contract time shall be deemed "Non-Compensable Delays." For delays caused by the State in its Contractual capacity, the Contractor may, in addition to a time extension, request additional compensation to reimburse it for damages sustained as a direct result of such delay, and such periods of extended Contract time may be deemed "Compensable Delays."

The period of a compensable delay is limited as follows: (1) it may not include time more than 60 days prior to the Engineer’s receiving written notice from the Contractor with adequate substantiation, of its intent to claim damages for the delay, (2) and it may not include periods of delay for which the State was responsible, but during which the Contractor experienced concurrent delays for which the State was not responsible.

Damages for periods of Project delay for which the State had sole responsibility shall be limited to the increased costs incurred by the Contractor (which shall not include lost profits), which the Contractor substantiates and which the Contractor shows were caused by such delays.

1.20-1.08.09—Facilities Construction - Failure to Complete Work on Time: Time is an essential element of the Contract. Since the prosecution of the Project may obstruct traffic, interfere with business, and otherwise inconvenience the public, it is important that the Project be pressed vigorously to completion. The cost to the Department of the administration of the Contract, including engineering, inspection and supervision, will also be increased as the time for Project completion is lengthened. Therefore, for each calendar day that any work shall remain uncompleted after the

Contract time has expired, the per diem sum of liquidated damages specified in the Contract shall be deducted from any money due to the Contractor. Liquidated damages are not a penalty, but are a reasonable estimate of the damages caused by such delay.

Liquidated damages as specified in the Contract shall be assessed against the Contractor per calendar day from that day until the date on which the Project is substantially completed.

The Engineer has the right to deduct the amount of the liquidated damages assessed against the Contractor from any estimated payment for work performed under the Contract or under any other State contract, or from any other sums owed by the State to the Contractor; or to claim and recover such sums by process of law.

1.20-1.08.10—Facilities Construction - Annulment of Contract: The Commissioner may give notice in writing to the Contractor and its surety of any delay, neglect, or default of the Contractor which the Commissioner believes has occurred, including one or more of the following:

1. Failure to begin the Project on the date specified in the Notice to Proceed.
2. Failure to perform the Project with sufficient personnel, equipment or materials to ensure timely Project completion.
3. Unsuitable performance of the Project or failure to perform Project work in accordance with the Contract.
4. Failure or refusal to remove or correct work rejected by the Engineer.
5. Discontinuance of suitable prosecution of the Project for a period of 72 hours, excluding Sundays and holidays, without written authorization to do so from the Engineer.
6. Failure to recommence discontinued work within 48 hours (excluding Sundays and holidays) after being ordered to do so by the Engineer.
7. Insolvency, filing for bankruptcy, or any act or occurrence which may render the Contractor financially incapable of completing the Project.
8. Failure to satisfy any final judgment for a period of 30 calendar days.
9. Making of any assignment for the benefit of creditors.
10. Violation of any provisions of the Contract.
11. Any other cause which, in the judgment of the Commissioner, warrants annulment, including, but not limited to, violations of the antitrust or criminal laws, and attempts to deceive or defraud the Department in material matters.

If the Contractor or surety within a period of 10 calendar days after such notice does not proceed in conformance with the directions set forth in the notification, or fails to present a remedial plan of operation satisfactory to the Commissioner, then the Commissioner may, at his discretion, order the surety to complete the Project or, without violating the Contract, take the right to control and prosecute the Project out of the hands of said Contractor and surety. No annulment or termination of the Contract for such cause will be deemed to have occurred, however, unless the Commissioner himself or herself (and not merely a designated representative of his or hers) expressly declares it in a writing to the Contractor.

The Department may acquire or rent whatever materials or equipment are necessary

in order to complete the Project and may seize and use for purposes of the Project (with any appropriate compensation to the Contractor) any material or equipment that the Contractor acquired or purchased expressly for the Project in accordance with a specific Contract requirement.

The Department may also enter into an agreement, either by negotiation or public letting, for the completion of the Contract according to the terms and provisions thereof, or use such other methods or combinations thereof as in the Commissioner's opinion shall be required or desirable for the completion of the Contract in an acceptable manner. All costs and charges incurred by the Department, in connection with completing the Project under the Contract, or as a result of the Contractor's default, shall be deducted from any monies due to or which may become due to the Contractor. In case such expense exceeds the sum which would have been payable under the Contract, then the Contractor and the surety shall be liable for, and shall pay to the State, the amount of the excess.

1.20-1.08.11—Facilities Construction - Final Cleaning Up: The Project will not be considered complete and will not be accepted until the rights of way, borrow pits, and all other ground, both public and private, occupied by the Contractor in connection with the Project has been cleared of all surplus and discarded materials, rubbish and temporary structures. The Contractor must drain all borrow pits where practicable. All property, both public and private, which has been damaged during the prosecution of the Project, shall be restored by the Contractor to an appearance and condition acceptable to the Engineer.

All ditches, waterways, drainage structures and culverts constructed under the Contract shall be cleaned and cleared of obstructions by the Contractor, and shall be left in a condition acceptable to the Engineer. When so directed by the Engineer, the Contractor shall clean all existing ditches, waterways, drainage structures and culverts of obstructions resulting from Project operations.

The Contractor shall:

(a) Clean each surface or unit to the satisfaction of the Engineer.

(b) Comply with all applicable manufacturer's recommendations for cleaning products and methods.

(c) Complete the following cleaning operations before requesting Substantial Completion Inspection for issuance of the Certificate of Compliance: remove labels that are not permanent labels; clean transparent materials, including mirrors and glass in doors and windows; remove glazing compound and other substances that are noticeable vision-obscuring materials; replace chipped or broken glass and other damaged transparent materials; clean exposed exterior and interior hard-surfaced finishes to a dust-free condition, free of stains, films and similar foreign substances; restore reflective surfaces to their original reflective condition; leave concrete floors broom-clean; vacuum carpeted surfaces; wipe surfaces of mechanical and electrical equipment; remove excess lubrication and other substances; clean plumbing fixtures to a sanitary condition; clean light fixtures and lamps; clean the site, including landscape development areas, of rubbish, litter and other foreign substances; sweep paved areas

broom-clean; remove stains, spills and other foreign deposits; and rake unpaved and unplanted grounds to a smooth even-textured surface.

(d) Engage a licensed exterminator to conduct an inspection and rid the Project of rodents, insects, and other pests, as necessary.

(e) Remove temporary facilities installed for protection of the Project work during construction.

(f) The Contractor shall not burn waste materials, bury debris or excess materials on the State's property or discharge volatile, harmful or dangerous materials into drainage systems. The Contractor shall remove waste materials from the site and dispose of lawfully.

(g) The Contractor shall not leave partial or full containers of materials, such as paints and solvents, other than those specified in the Contract, on the Project site. Such materials shall remain property of the Contractor and be removed from State property at the completion of the Project.

1.20-1.08.12—Facilities Construction - Semi-Final, Substantial Completion, and Final Inspections:

1. Semi-Final Inspection: If the Contractor has installed the permanent electrical service and completed all physical work, a Semi-Final Inspection will be scheduled as soon as practical after the Contractor submits the following:

(1) Record Drawings, Record Specifications, miscellaneous records, and Contractor Asbestos Certification Letter as referenced in Article 1.20-1.05.05;

(2) final survey;

(3) preliminary test/adjust/balance records including the air and water balance report;

(4) one draft copy of all Operation and Maintenance Manuals as referenced in Article 1.20-1.08.14;

(5) a list of all required training along with the entities who will provide the training and estimated time frames for each session;

(6) a list of all spare parts and salvage materials to be turned over to the Owner, and

(7) account numbers and copies of latest bills from each utility.

The Engineer, Designer, Building and Fire Code Officials, and the Owner will conduct an inspection to prepare a “Punch List” of unfulfilled, substandard, or incomplete items. During this inspection, the Contractor shall have all technicians necessary to demonstrate the complete operation of all systems on site. Examples of such systems include, but are not limited to, the following: boiler, HVAC, fire alarm, and building automation. Results of the completed inspection will form the basis of requirements for the Substantial Completion Inspection. The Engineer reserves the right to issue the C.O.C. after the Semi-Final Inspection if the requirements of the Substantial Completion Inspection are met and there are no Building Code or Fire Code compliance issues or any major “Punch List” items that would adversely affect the tenants of the facility after moving in. The Engineer will advise the Contractor of the construction that shall be completed before the issuance of the C.O.C.

2. Substantial Completion Inspection: Before requesting a Substantial Completion

Inspection for the issuance of the C.O.C, the Contractor shall complete all items listed on the Engineer's Semi-Final Inspection "Punch List." If the Engineer determines that the "Punch List" is complete, a Substantial Completion Inspection will be scheduled as soon as practical after the Contractor submits the following:

(1) final test/adjust/balance records including the air and water balance report;
(2) final copies of Operation and Maintenance Manuals as referenced in Article 1.20-1.08.14;
(3) executed warranties as referenced in Article 1.20-1.06.08;
(4) maintenance service agreements;
(5) final construction photographs;
(6) final meter readings for all utilities;

and the Contractor

(1) completes final cleaning requirements and touch up painting;
(2) delivers all spare parts and salvage materials to the Engineer; and
(3) completes all training of the Owner's personnel.

The Engineer and code officials will conduct the inspection. During this inspection, the Contractor shall have all technicians necessary to demonstrate the complete operation of all systems on-site if requested by the Engineer. The Engineer will advise the Contractor of the construction that is required to be completed.

3. Final Completion Inspection: The Engineer will schedule a Final Completion Inspection 1 year after the issuance of the C.O.C. for "Relief of Responsibility," notwithstanding any warranty obligations, only after the Engineer determines that the Contractor has satisfactorily:

(1) completed follow up door hardware adjusting;
(2) completed subsequent season air and water balancing;
(3) resolved warrantee issues;
(4) completed miscellaneous follow up testing; and
(5) completed landscaping requirements.

1.20-1.08.13—Facilities Construction - Termination of the Contractor's Responsibility:

1. General: The Contractor's responsibility for non-administrative Project work will be considered terminated when the final inspection has been held, any required additional work and final cleaning-up have been completed, all final operation and maintenance manuals have been submitted, and all of the Contractor's equipment and construction signs have been removed from the Project site. When these requirements have been met to the satisfaction of the Engineer, the Commissioner will accept the work by certifying in writing to the Contractor that the non-administrative Project work has been completed.

2. Utility Services: At the issuance of the Certificate of Compliance or at an earlier date if directed by the Engineer, the Contractor shall request in writing that permanent utility services be placed in the Department's name. The Contractor's written request shall include the following information: account number, meter number, exact street address, and, if applicable, the Certificate of Compliance date. Within 7 calendar days

of the receipt of the Contractor's written request, the Department will notify the utility providing the service that it will accept billing. The Department will not accept billing of any utility service until the Certificate of Compliance has been issued, unless the Engineer establishes an earlier date in writing.

3. Spare Parts: The Contractor shall review the Contract and prepare a list of acceptable material to be turned over to the State at the completion of the Project for review and concurrence by the Engineer.

The Contractor shall provide a material safety data sheet with all required items to comply with OSHA requirements. The Engineer will not accept partially used and open items such as paints and solvents.

4. Insurance Coverage: The Contractor shall have in place all insurance coverage identified in Article 1.20-1.03.07 for the performance of any warranty work.

1.20-1.08.14—Facilities Construction - Acceptance of Project: The Project will be accepted by the Commissioner when all Project work has been completed, as defined by the requirements of Article 1.20-1.08.13, and the following have been submitted to the satisfaction of the Engineer:

1. **Supporting information necessary to substantiate pay quantities, such as cost-plus backup documentation;**
2. **Reports and forms required on all Federal Aid Projects;**
3. **Record Documents:** The Contractor shall submit all documents required by Article 1.20-1.05.05 to the Engineer prior to the date of the Semi-Final Inspection.
4. **Operation and Maintenance Manuals:** Prior to the date of the Semi-Final Inspection, the Contractor shall compile operation and maintenance manuals in the form of instructional manuals for use by the Owner. The Contractor shall organize said manuals into suitable sets of manageable size and, where possible, assemble instructions for similar equipment into a single binder.

Where 2 or more binders are necessary to accommodate data of a system, the Contractor shall cross-reference other binders where necessary to provide essential information for proper operation or maintenance of the piece of equipment or system.

For each manual, the Contractor shall:

(a) Provide heavy-duty, commercial-quality, 3-ring, vinyl-covered, loose-leaf binders, thick enough to accommodate contents, sized to receive 8-1/2-inch x 11-inch paper.

(b) Identify the binder’s contents on binder’s front and spine with the printed title "OPERATION AND MAINTENANCE MANUAL," Project title or name, and subject matter covered, and volume number for multiple volume sets.

(c) Organize each manual into sections, separated by a heavy paper divider with a tab marked to indicate the contents of the section.

(d) Provide a title page as the first sheet of each manual with the following information: subject matter covered by the manual; Contract number and title; date of submittal; name, address, and telephone number of the Contractor; and cross-reference to related systems in other sections.

(e) Provide a written table of contents for each volume, arranged systematically

according to the organization of the Contract provisions (including specific CSI-formatted specifications within a particular Special Provision).

(f) Provide a general information section immediately following the table of contents, listing each product included in the manual, identified by product name. The Contractor shall list the name, address, and telephone number of the subcontractor, the maintenance contractor, and the local source for replacement parts and equipment for each product.

(g) Include manufacturer's standard printed data and mark each sheet to identify each part or product included in the Project, identify each product using appropriate references from the Contract, and delete references to information that is not applicable. The use of project record documents as part of operation and maintenance manuals is not permitted.

(h) Prepare supplementary text to provide operation and maintenance information when the manufacturer's standard printed data is not available or printed data is insufficient and the information is necessary for proper operation and maintenance of equipment or systems, organize text in a consistent format under separate headings for each procedure, and provide a logical sequence of instruction for each operation or maintenance procedure.

(i) Provide drawings where necessary in order to supplement manufacturer's printed data to illustrate the relationship of component parts of equipment or systems or to provide control or flow diagrams. Where oversize drawings are necessary, the Contractor shall fold drawings to the same size as text pages and use as a foldout. If the drawings are too large to be used practically as a foldout, the Contractor shall place the folded drawing in a 8-1/2-in x 11-in labeled pre-punched envelope or sleeve, and place it with the manufacturer’s printed data. The Contractor shall coordinate these drawings with information contained in project record drawings to ensure correct illustration of the completed installation. The use of Project record documents as part of operation and maintenance manuals is not permitted.

(j) Provide estimated life cycle costs to maintain each product included in the manual to reach maximum useful life (i.e. annual, mid-life overhaul, end of life overhaul, or programmed interval replacement).

Product Maintenance Manual: The Contractor shall provide:

(a) Manufacturer's data and instructions on care and maintenance of product material, and finish.

(b) Complete information on architectural products, including the following, as applicable: manufacturer’s catalog number, size, material composition, color, texture, and re-ordering information for specially manufactured products.

(c) Information (including cleaning schedule) on care and maintenance, including manufacturer's recommendations for types of cleaning agents and methods of cleaning, and methods of cleaning that could prove detrimental to the product.

(d) Complete manufacturer's data with instructions on inspection, maintenance, and repair of products exposed to the weather or designed for moisture-protection purposes.

(e) Manufacturer's data giving detailed information, including the following, as applicable: identification of relevant industry standards, chemical composition, installation details, inspection procedures, maintenance information, and repair procedures.

Equipment and Systems Maintenance Manual: The Contractor shall provide:

(a) A complete description of each unit and related component parts, including the following: name of manufacturer, model number and serial number, equipment or system function, operating characteristics, limiting conditions, performance curves, and engineering data and test results.

(b) The following for each unit and related component part: assembly drawings and diagrams required for maintenance, complete list of parts and supplies with current unit prices (identify which items are recommended to be stocked as spare parts and identify which items have an anticipated ordering and delivery time greater than 10 days), complete list of distributors and authorized repair facilities, and telephone numbers for technical service.

(c) Information detailing essential maintenance procedures, including the following or information about the following: routine operations; troubleshooting guide; disassembly, repair, and reassembly; alignment, adjusting, and checking; a list of any special tools required.

(d) Information on equipment and system operating procedures, including the following: startup procedures, equipment or system break-in, normal operating instructions, regulation and control procedures, instructions for shutdown and emergencies, summer and winter operating instructions, required sequences for electric or electronic systems, and special operating instructions.

(e) A schedule of routine servicing and lubrication requirements, including a list of required lubricants for equipment.

(f) As-installed control diagrams for systems requiring controls.

(g) Contractor's coordination drawings of as-installed piping and other systems, color-coded as needed for identification.

(h) Charts of valve tag numbers, with the location and function of each valve (clearly mark as such any valve intended for emergency shut-off or similar special use).

(i) Complete circuit directories of panelboards, including designations of the following: electric service, controls, and communication.

(j) Copies of maintenance agreements with service agent name and telephone number.

5. Training: The Contractor shall use experienced instructors thoroughly trained and experienced in operation and maintenance of Project equipment and systems, in order to instruct the Owner’s operation and maintenance personnel.

The Contractor shall develop a training schedule for approval by the Engineer, the Owner, and the Commissioning Authority when applicable that is coordinated with the Owner’s operations and working hours. This schedule shall be submitted a minimum of 30 calendar days in advance of the start of training.

The Contractor shall;

(1) arrange for each installer of equipment that requires regular maintenance to meet

with the Owner in order to provide instruction in the proper operation and maintenance of any equipment that requires regular maintenance,

(2) provide instruction by manufacturer's representatives if installers are not experienced in any relevant procedures,

(3) provide instruction at agreed-upon times, and

(4) provide Engineer with a minimum of 72 hours advance notice of the training sessions.

The Contractor shall provide a syllabus prior to the training to ensure that the appropriate Owner's operation and maintenance personnel are in attendance.

The Contractor shall submit to the Engineer for approval, a qualified commercial videographer to videotape the training sessions. The videographer shall be a firm or an individual of established reputation that has been regularly engaged as a professional videographer for not less than 3 years.

The Contractor shall video record each training session and provide said video in DVD format to the Engineer for the Owner's future use. Two (2) DVD's of all training sessions shall be turned over to the Owner through the Engineer. The videographer shall transfer copyright usage rights to the Owner for unlimited reproduction.

6. Any other documents required by the Contract.

SECTION 1.20-1.09
MEASUREMENT AND PAYMENT FOR FACILITIES CONSTRUCTION

1.20-1.09.01—Facilities Construction - Measurement of Quantities
1.20-1.09.02—Facilities Construction - Value Engineering Change Proposal
1.20-1.09.03—Facilities Construction - Increased or Decreased Quantities
1.20-1.09.04—Facilities Construction - Extra and Cost-Plus Work
1.20-1.09.05—Facilities Construction - Eliminated Items
1.20-1.09.06—Facilities Construction - Partial Payments
1.20-1.09.07—Facilities Construction - Final Payment
1.20-1.09.08—Facilities Construction - Payment of Costs Owed to the State

1.20.1.09.01—Facilities Construction - Measurement of Quantities: Work completed in compliance with the Contract will be measured by the Engineer according to U.S. Customary (System International) standard measures, and quantities of work performed shall be computed based on such measurements made in accordance with the methods of measurement described herein under provisions regarding the applicable Contract item.

Notwithstanding any other provision in the Contract, only work that is within the payment limits prescribed by the Contract or ordered by the Engineer will be measured for payment. No payment will be made for work that is not actually performed.

Structures shall be measured and quantities computed according to the neat lines shown on the plans (as those plans may be revised by authorization of the Engineer), or as may otherwise be required by the Contract.

Quantities of materials measured for payment by net weight shall be measured in tons, while contained in hauling vehicles on scales furnished by and at the expense of the

Contractor. The scales shall be satisfactory to the Engineer and shall be sealed. When required by the Engineer, an inspector will be appointed and compensated by the Department to check the weight of all materials to be incorporated into the Project. The tare weight of trucks used to haul materials being paid for by weight shall be taken at such times as the Engineer directs.

1.20-1.09.02—Facilities Construction - Value Engineering Change Proposal: These Value Engineering Change Proposal (VECP) provisions apply as encouragement to the Contractor to initiate, develop, and present to the Department for consideration cost- or time- reduction proposals or a combination of both conceived by the Contractor, involving changes to the drawings, designs, specifications, or other requirements of the Contract. These provisions do not apply unless the proposal submitted is specifically identified by the Contractor as being presented for consideration as a VECP. All such proposals must be made on the Department's VECP form, copies of which are available from the Department. The Department reserves the right to decline to review, or to reject after initial review, any VECP. Before expending considerable funds in development of a formal VECP, the Contractor shall submit a conceptual Proposal to the Department on Department-provided forms.

The proposals which may be considered as VECPs are those which, if implemented, (a) would require modification of the Contract by construction order; (b) would produce a savings to the Department by calling for the use of items or methods less costly than those specified in the Contract; (c) would not alter necessary standardized features of the original Project; and (d) would not impair essential functions or characteristics of the construction called for by the original Contract, such as service life, reliability, economy of operation, and ease of maintenance.

Material substitution alone will not be considered as a VECP.

A VECP may shorten Contract time, however, acceleration alone will not be considered as a VECP.

Cautions and Conditions:

1. The Contractor is cautioned not to base any bid or bid price on the anticipated approval of a VECP and to recognize that such Proposal may be rejected. The Contractor will be required to perform the Contract in accordance with the existing Contract plans and specifications at the prices bid unless and until the Department formally accepts, in writing, the Contractor's VECP.
2. In order for the Department to consider such a Proposal, the savings likely to be generated by the Proposal must be sufficient, in the sole judgement of the Department, to warrant its review and processing by the Department. All costs resulting from such review or processing will be borne by the Department. Before any VECP will be considered by the Department, the Department must determine, in its sole judgement, that implementation of the Proposal would result in a total cost savings of more than $100,000.00, reflecting a savings of at least $50,000.00 for the Department. The Department will not consider any VECP that would require an increase in Contract time.
3. All VECPs apply only to the ongoing Contract, and whether approved or not, such Proposals become the property of the Department. Such Proposals shall contain

no restrictions imposed by the Contractor on their use or disclosure by the State. The Department will have the right to use, duplicate and disclose in whole or in part any data necessary for the use or implementation of the Proposal. The Department retains the right to use any accepted Proposal or part thereof on any other current or subsequent Department projects without any obligation to the Contractor for such use. This provision is not intended to deny rights provided by law with respect to patented materials or processes.

4. If the Department already has under consideration certain revisions of the Contract or has approved certain changes in specifications or standard drawings for general use which subsequently appear in a VECP, the Department may reject the Contractor's Proposal and may proceed with such revisions without any obligation to the Contractor.
5. The Proposal must be presented and approved in writing prior to the Contractor's undertaking any work on the Contract items involved in the proposal. Savings due to a reduction in quantities or deletion of items which result solely from adjustments to field conditions, and Proposals which would only waive specification or other Contract requirements, are not considered to be VECPs.
6. The Contractor shall have no claim against the Department for any costs or delays due to the Department's review or rejection of a VECP, including, but not limited to, development costs, anticipated profits, or increased material or labor costs resulting from delays in the review or rejection of such Proposal.
7. The Department will be the sole judge of the acceptability of a Proposal and of the estimated net savings in construction costs that would result from adoption of all or any part(s) of such Proposal. In determining such estimated net savings, the Department reserves the right to disregard the Contract bid prices if, in the judgment of the Engineer, such prices do not represent a fair measure of the value of work to be performed or deleted under the Proposal. Errors in the estimated quantities in the bid proposal form for the Contract shall be corrected by the Department prior to calculating the savings that would likely result from adoption of the VECP.
8. The Engineer may reject all or any portion of work performed pursuant to an approved VECP if the Engineer determines that unsatisfactory results are being obtained because of the Proposal's implementation with regard to that work. The Engineer may direct the removal of such rejected work and require the Contractor to proceed in accordance with the original Contract requirements. Where modifications of the VECP have been approved in order to adjust to field or other conditions, payment will be limited to the total amount payable for the work at the Contract bid prices, as if the pertinent work had been constructed in accordance with the original Contract requirements. The Contractor waives the right to use such rejection or limitation of reimbursement as the basis of any claim against the State for delay damages or for any other damages or costs.
9. VECPs must meet the requirements of the specifications or standards of the Department. The standards governing the original design of the Contract will be the minimal standard allowed.
10. If additional information is needed in order for the Department to evaluate

Proposals, the Contractor must provide the Department with this information within 14 calendar days of such request or within such other time period as may be approved by the Department. Failure to do so will result in rejection of the Proposal.

11. The Contractor shall provide revised Project plans, specifications and estimates to the Department in construction order format, reflecting such changes as would be required for implementation of the VECP. The Contractor shall be solely responsible for any errors or omissions resulting from such revisions.
12. Savings not directly related to the Contract, such as, but not limited to, reductions in inspection or testing costs or Department overhead, will not be included in the savings calculation for any VECP.

After the Contractor submits a conceptual Proposal, they will be notified in writing of the acceptability or the reason(s) for its rejection. The Department retains the right to reject the formal Proposal even if the conceptual Proposal was determined acceptable.

VECPs will be processed in the same manner as are alterations of the Contract that require a construction order.

VECP Submittal Requirements:

1. A statement that the Proposal is being submitted as a VECP.
2. A description of the difference between the existing Contract requirements and the proposed change(s), and the comparative advantages and disadvantages of each, taking into account considerations of service life, economy of operations, ease of maintenance, desired appearance, safety, and environmental impacts or necessary permit changes. When an item's function or characteristics would be altered by implementation of the Proposal, a justification of the anticipated effects of the alteration on the end item's performance must be included in the Proposal. A life-cycle cost analysis must be included for items involving alteration of functional characteristics. Factors for determining future worth will be provided by the Department.
3. Complete plans, specifications, and computations signed and sealed by a Professional Engineer licensed by the State of Connecticut, showing that the proposed Contract revisions would incorporate the same design criteria and restrictions that applied to the original Contract features and requirements. Said revisions shall be submitted by the Contractor in the Department's construction order format consisting of 1 paper copy of the plans and 1 electronic copy of the plans as a portable document format (PDF) file, indicating
   (a) quantity increases and decreases by item number, with associated cost;
   (b) new items, with their quantities and costs;
   (c) specifications in contract format; and, if needed,
   (d) compliance permit applications and revisions in accordance with Articles 1.20-1.10.01 through 1.20-1.10.08 of these specifications.
4. A complete analysis of the probable cost effects of the proposed changes on Project construction, future operations in connection with the completed Project, maintenance and durability of completed Project construction, and other aspects of the Project, as appropriate.
5. The date by which the Proposal would have to be implemented in order for the

Department to obtain the maximum cost reduction from the Proposal's implementation. The period established by the date must allow the Department ample time for review and processing of the Proposal. Should the Department find that it does not have sufficient time for such review and processing, it may reject the Proposal solely on such basis. If the Department fails to respond to the Proposal by said date, the Contractor shall consider the Proposal to be rejected and shall have no claims against the State as a result thereof.

6. A description of the effect that the implementation of the Proposal would likely have on the time required to complete the Project.

Payment for accepted VECPs:

1. The changes resulting from a VECP will be incorporated into the Contract by construction order and shall reflect the changes in existing unit bid item quantities, or any new agreed price items, cost-plus lump sum, or any combination thereof, as appropriate, in accordance with the Specifications and as determined by the Department. Any lump sum submission shall be accompanied by a schedule of payment values.
2. The Contract prices for the revised Project work will be paid directly as accomplished. In addition to such payment, the Department will pay the Contractor, under a separate item or a Value Engineering Incentive item, 50% of the total savings obtained by the State as a result of its implementation of the VECP. An estimate of said savings is to be calculated by the Department within 1 week prior to the Proposal's acceptance, by
   (a) estimating what it will cost the Department to carry out the Project as revised according to the VECP;
   (b) estimating what it would have cost the Department to carry out the Project under the terms of the Contract as modified by any construction orders as of the time that the Department accepted the Proposal; and
   (c) subtracting the sum estimated as per (a) from the sum estimated as per (b).

   When the implementation of the Proposal, including all related construction, has been completed, the Department will calculate the actual savings that resulted from it. The Department will then distribute half of the actual savings to the Contractor.
3. The Contractor's costs for development, design, submission and processing of the VECP are not eligible for reimbursement.
4. The Department will not reimburse the Contractor based on any cost savings not identified in the VECP prior to its acceptance.
5. The cost savings from a VECP that is exclusively time reduction shall be calculated as the number of Contract days reduced multiplied by the amount of liquidated damages for 1 day under the Contract.

1.20-1.09.03—Facilities Construction - Increased or Decreased Quantities:

Whenever the quantity of any item as given in both the bid proposal form and Contract is increased or decreased, the Department will pay for such item at the Contract price, on the basis of the actual quantity completed, except as otherwise expressly authorized under the provisions of Articles 1.20-1.04.02, 1.20-1.04.03 or 1.20- 1.04.04.

1.20-1.09.04—Facilities Construction - Extra and Cost-Plus Work: Extra work shall be performed only under the conditions and subject to the requirements outlined in Article 1.20-1.04.05. Payment for such work shall be based either on a unit price or on a lump sum, to be agreed upon before the extra work is started; or, if no agreement as to price can be reached, the Engineer may order that the work will be paid for on a cost-plus basis.

For all work done on a cost-plus basis, the Contractor's compensation shall be determined in accordance with the following requirements:

(a) Labor:

(1) For all labor, the Department shall pay the Contractor the wage rate actually paid as shown by its certified payroll, which shall be at least the minimum rate established for the Project by the State Labor Department or the U.S. Department of Labor. For all foremen in direct charge of Project work, the Department will pay the Contractor the actual wage paid to the foremen as shown on the Contractor's certified payroll.

(2) The Department will reimburse the Contractor for the actual costs paid to, or on behalf of, workers by reason of allowances, health and welfare benefits, pension fund benefits and other such benefits, when such amounts are required by a collective bargaining agreement or another employment contract generally applicable to the classes of labor employed on the Project. The Contractor shall certify all such costs.

(3) For property damage, liability and workmen's compensation insurance premiums, unemployment insurance contributions and social security taxes on Project cost-plus work, the Department will reimburse the Contractor for its actual Project costs. The Contractor shall provide to the Engineer documentation, satisfactory to the Engineer in form and substance, of all such costs.

(4) The Department will also pay to the Contractor an amount equal to 20% (15% for overhead, 5% for profit) of the total sums described in **(a)** (1) through (3) above.

No part of the salary or expenses of anyone connected with the Contractor's forces above the grade of project superintendent, who provides general supervision of Project work, will be included in the above payment calculations, except when the Contractor's organization is entirely occupied with cost-plus work, in which case the salary of a superintendent may be included in said labor item when the nature of the pertinent Project work is such that, in the opinion of the Engineer, a superintendent is required for that work. The allowable rate of pay for such superintendent shall be agreed upon before the Contractor begins the pertinent work. If no agreement on the rate can be reached, the Engineer will make payment based on such rate as he deems reasonable

The Engineer reserves the right to determine the number and type of personnel to be employed for the cost-plus Project work.

(b) Specialized Work: When the Engineer directs the Contractor to perform specialized work requiring skills, tools and equipment substantially unlike those ordinarily used by the Contractor or its authorized Project subcontractors, the Department will pay the Contractor for the use of a specialist to perform the specialized work. For such specialized services, including materials incorporated into the Project,

the Department will pay the Contractor its actual costs, plus additional compensation in accordance with subparagraph (e) below. Prior to performing such specialized work, the Contractor shall obtain and submit to the Engineer a minimum of three price quotes for the work, if requested by the Engineer.

(c) Materials: For all materials necessary for cost-plus Project work, the Department will pay the Contractor its actual cost for such materials as delivered to the Project site, including delivery charges as shown by original receipted bills, plus 15 % of the sum of said cost and charges.

In lieu of receipted bills for materials used which were not specifically purchased for the Project, but were taken from the Contractor's stock, the Contractor shall provide to the Engineer an affidavit certifying that such materials were not purchased for the Project, that the materials were taken from the Contractor's stock, that the quantity claimed to have been used on the Project was actually so used, and that the price claimed for the materials is currently their fair market value. The Department will pay for costs of transporting the materials to the Project site, in accordance with subparagraphs (a) and (d) hereof.

The Department will not reimburse the Contractor for any penalty or charge incurred due to the Contractor's late or delayed payment for the pertinent materials.

(d) Equipment: All equipment used for cost-plus Project work must, in the judgment of the Engineer, be in good working condition and suitable for the purpose intended; and the Engineer reserves the right to determine the size and number of units of equipment to be used for such work. The manufacturer's ratings shall be the basis for all Rental Rate Blue Book classifications used for payment purposes. ("Rental Rate Blue Book" as used in these specifications refers to the current edition of the Rental Rate Blue Book, taking into account all current Rate Adjustment Tables, and amendments thereof, which is published by K III Directory Corporation of San Jose, California, including all current Rate Adjustment Tables and amendments thereof.) Trucks will be classified by cubic-yard capacity.

No percentage mark-up will be added for payment purposes to amounts charged by the Contractor based on equipment rental rates.

The Department will not pay rental rates for small tools needed to complete the cost-plus Project work.

For payment purposes, estimated operating costs per hour from the Rental Rate Blue Book will apply only to the actual time during which the equipment is actively being used to perform cost-plus Project work.

For equipment that is also being used for non-cost-plus Project work, the Department will pay the applicable hourly rate only for the actual time that the equipment is assigned to cost-plus Project work. The applicable period of assignment for each piece of equipment shall start when the equipment commences to be used for cost-plus Project work ordered by the Engineer, and shall end at the time designated by the Engineer.

For equipment which has to be brought to the Project site exclusively for cost-plus work, the Department will reimburse the Contractor for loading and unloading costs and costs of transporting such equipment to and from the Project site; provided, however, that payment for return transportation from the Project site shall not exceed the cost of moving the equipment to that site. If such a piece of equipment is self-propelled, and is

driven to the Project site under its own power, then the Department will pay only operating costs and labor costs for its transport to and from the Project site. The Department will not, however, pay for any loading, unloading and transportation costs if the equipment is used for any Project work on the site other than cost-plus work.

(1) Owned Equipment: The Department will pay the Contractor the applicable rental rate set forth in the Rental Rate Blue Book for any equipment (1) which the Contractor uses, with the Engineer's authorization, to perform cost-plus Project work, and (2) which is owned by the Contractor or a subsidiary, affiliate, or parent company of the Contractor (no matter how far up or down the chain of ownership from the Contractor).

The maximum hourly rate to be used in paying for Contractor-owned equipment assigned to cost-plus work shall be the applicable monthly rate in the Rental Rate Blue Book, divided by 176 (176 working hours per month).

Should the proper completion of the cost-plus Project work require equipment of a type not covered by the Rental Rate Blue Book, the Engineer will determine, and the Department will make payment to the Contractor at, a reasonable rental rate based on rates prevailing in the area of the Project. If practicable, such rates shall be determined by the Engineer before the affected work is begun. If the Contractor proposes that the Engineer use a particular rate in such an instance, the Contractor must disclose to the Engineer the specific sources of, or support for, said rate.

If a piece of equipment owned by the Contractor is assigned to cost-plus Project work, but remains idle for some portion of the period of the cost-plus work, the Department will pay for that idle time at 50% of the applicable rental rate (exclusive of operating costs) in the Rental Rate Blue Book.

For payment purposes, the period of equipment usage shall be deemed to start when the Contractor begins to use the equipment for cost-plus Project work and shall be deemed to end when the equipment is released by the Engineer from use for such work. Any hours during which the equipment is used for work other than cost-plus Project work will be deducted from the pertinent payment period.

For any piece of Contractor-owned equipment assigned to cost-plus Project work, the Department will reimburse the Contractor for an aggregate minimum of 8 hours (of use time, idle time, or a combination thereof) in each 24-hour day (measured from one midnight to the following midnight) during the assignment period. No such reimbursement will be made, however, for Saturdays, Sundays and legal holidays during which the Contractor does no Project work, or for any other day on which the Engineer orders the Contractor to do no Project work. If the equipment is used to perform cost-plus Project work for more than 8 hours in a day, the Department will pay the Contractor at the applicable hourly rate computed on a monthly basis for the actual time of use; however the Department will not pay the Contractor for more than 8 hours of idle time for a piece of equipment during a given day.

The Department shall have the right to limit its aggregate Project payments for idle time for a given piece of equipment to the replacement value of that equipment.

(2) Rented Equipment: If the Engineer determines that in order to perform the cost-plus Project work the Contractor must rent certain machinery, trucks or other equipment not owned by the Contractor or a subsidiary, affiliate, or parent company of the Contractor (no matter how far up or down the chain of ownership from the Contractor), the Contractor shall inform the Engineer, in advance of such rental, (1) of the specific nature of the rental(s), (2) the reasons for its need for such rental(s), (3) the anticipated or proposed rental rate(s), and (4) the estimated duration for the use of the equipment. Rates for such rented equipment must be provided based on the following:

—A daily rate per hour when the equipment is to be specifically assigned to Project work by the Engineer for a period of 7 consecutive calendar days or less.

—A weekly rate per hour when such assigned time exceeds 7 consecutive calendar days, but does not exceed 21 consecutive calendar days.

—A monthly rate per hour when such assigned time exceeds 21 consecutive calendar days.

The applicable daily, weekly, or monthly rate will be determined at the expiration of 21 calendar days or upon release of the equipment by the Engineer, whichever occurs first. Interruptions of the rental period, when equipment is used on other than assigned cost-plus work, will not entitle the Contractor to payment at a rental rate that would be applicable to the shorter periods arguably occasioned by such interruptions.

Prior to renting such equipment, the Contractor shall obtain and submit to the Engineer a minimum of three quotes, if requested by the Engineer.

The Department will pay the Contractor for such rental at the rate actually paid by the Contractor, provided that the given use and rental rate are acceptable to the Engineer. In order to obtain such payment, the Contractor must provide the Engineer with a copy of the original receipted bill for the rental expenses incurred.

(e) Administrative Expense: When extra work on a cost-plus basis is performed by an authorized subcontractor, the Department will pay the Contractor an additional 7.5% for that work; such payment will be in addition to the percentage payments described in (a), (b), (c) and (d) above, as a reimbursement for the Contractor's administrative expense in connection with such work. Approval of such additional payments will be given only after the Contractor provides to the Engineer receipted invoices for all relevant costs.

(f) Miscellaneous: The compensation provided for in (a), (b), (c), (d) and (e) above shall be deemed to be payment in full for the extra work and shall be deemed as full compensation for same, including costs of superintendence, use of small tools, equipment for which no rental is allowed, safety equipment, consumables, field office overhead, home office overhead, bonding, other insurance, and profit. The Contractor's representative and the Engineer shall compare their respective records of the extra work done on a cost-plus basis at the end of each day. Copies of these records shall be signed by both the Engineer and the Contractor's representative. The Engineer will then forward a copy of same to the Contractor and to any affected subcontractor in

accordance with Department procedures. Upon payment of such costs by the Contractor, the Contractor shall immediately furnish the Engineer with original receipted bills covering the costs, including transportation charges, for all materials used for such work.

1.20-1.09.05—Facilities Construction - Eliminated Items: Should the Engineer determine any Contract items, or portion of Project work contained in a lump sum item, to be unnecessary for completion of the Project, the Engineer may eliminate such items or portion of work from the Contract. Such action shall in no way invalidate the Contract; and no allowance for any items, or portion of work contained in a lump sum item so eliminated, will be made by the Engineer in making final payment to the Contractor, except for (a) such actual work as may have been done on the items, or portion of work contained in a lump sum item, prior to the Engineer's notice to the Contractor that the items or work had been eliminated; and (b) such related material as may have been purchased for the Project prior to said notice. This provision shall apply unless the Engineer determines that an elimination of a given item, or portion of work contained in a lump sum item, constitutes a "significant change" in the character of the Contract work, as defined under Article 1.20-1.04.03. In such a case, the terms of Article 1.20-1.04.03 shall be applied to the payment issues related to the eliminated item or work.

1.20-1.09.06—Facilities Construction - Partial Payments:

A. Monthly and Semi-monthly Estimates:

(1) Once each month, the Engineer will make, in writing, current estimates of the value of work performed in accordance with the Contract, calculated at Contract unit prices, including but not limited to the value of materials complete in place and materials not yet incorporated into the Project, but approved by the Engineer for payment (as provided for elsewhere in this article). Retainage will not be held.

Exceptions may be made as follows:

(a) When not in conflict with the interests of the State, the Contractor may request, and the Engineer may make, semi-monthly estimates for payment.

(b) If, in the judgment of the Assistant District Engineer, the Project is not proceeding in accordance with the Contract the Engineer may decline to make a payment estimate.

(c) If the total value of the Project work completed since the last estimate amounts to less than $2,500, the Engineer also may decline to make a payment estimate.

(2) The Engineer may also make payment at Contract unit prices for the number of units that represent the value of the Project work performed to date, if said units are essentially, though not totally, complete.

B. Payment for Stored Materials: Non-perishable materials that are required for Project construction and that the Contractor has produced or purchased specifically for incorporation into the Project, but which have not yet been so incorporated, may be included in a payment estimate if

(i) the materials meet all applicable Contract specifications,

(ii) the materials have been delivered to the Project site or to another location approved by the Engineer, and

(iii) the Contractor has submitted to the Engineer, as evidence of the Contractor's purchase of the materials, either a copy of a receipted bill for same or a Certificate of Title to the materials, in the form approved by the Department, duly-executed by the Contractor and the Vendor.

The Engineer will decide at what fair and appropriate fraction of the applicable Contract price such materials may be included in a payment estimate.

Offsite storage may be approved by the Engineer, provided that the materials proposed for payment are segregated from other materials, clearly labeled as being owned by the Department for use on the identified Project, otherwise handled in compliance with Article 1.20-1.06.03, and stored in accordance with the manufacturer's recommendations. All such materials must be readily-available for inventory and inspection by the Engineer. Storage outside of the State of Connecticut may be considered only when a representative of the Department is able to verify that the above requirements have been satisfied.

For items requiring extended fabrication, manufacturing or assembly time, the Contractor may propose to the Engineer a schedule of values for the related material costs. If the Engineer approves such a schedule of values, it shall become the Basis of Payment for the stored materials, so long as all other pertinent Contract requirements have been satisfied.

Generic materials having a use on many projects will be considered for payment prior to their incorporation into the Project only if stored in unopened packaging or in large lots. Stock and raw materials will not be considered for such advance payment without the Engineer's prior written consent thereto.

In no case shall material payments exceed the Contract unit price or lump sum price less the actual value of delivery and installation of the materials; if they do exceed such a price, the Engineer reserves the right to reduce any related payment accordingly. Such reductions in payment shall in no way affect the Department's ownership interest in the stored materials.

1.20-1.09.07—Facilities Construction - Final Payment: When the Commissioner has accepted the Project in accordance with Article 1.20-1.08.14, the Engineer will prepare a final payment estimate.

1.20-1.09.08—Facilities Construction - Vacant

1.20-1.09.09—Facilities Construction - Payment of Costs Owed to the State: The State shall have the right to set off against amounts otherwise due to the Contractor under this Contract or under any other contract or arrangement that the Contractor has with the State

(a) any costs that the State has incurred due to the Contractor's noncompliance with this Contract and

(b) any other amounts that are due and payable from the Contractor to the State.

Any sum taken in setoff from the Contractor shall be deemed to have been paid to the

Contractor for purposes of payment obligations under Article 1.20-1.03.04 of these Specifications.

SECTION 1.20-1.10
ENVIRONMENTAL COMPLIANCE FOR FACILITIES CONSTRUCTION

1.20-1.10.01—Facilities Construction - General
1.20-1.10.02—Facilities Construction - Compliance with Laws and Regulations
1.20-1.10.03—Facilities Construction - Water Pollution Control
1.20-1.10.04—Facilities Construction - Vacant
1.20-1.10.05—Facilities Construction - Construction Noise Pollution
1.20-1.10.06—Facilities Construction - Protection of Archaeological and Paleontological Remains and Materials
1.20-1.10.07—Facilities Construction - Controlled and Hazardous Materials
1.20.1.10.08—Facilities Construction - Vehicle Emissions

1.20-1.10.01—Facilities Construction - General: During and following Project construction, the Contractor shall exercise precaution and care to prevent or minimize negative effects on the environment, including the State's waters, wetlands, and other natural resources.

The Contractor shall comply with all Project permits and permit applications as though the Contractor were the permittee.

The Contractor must comply with the environmental provisions specified in the Contract, and any Federal, State or municipal laws or regulations. If the Contractor fails to comply with these environmental provisions, the Contractor shall be penalized as specified in this Section and elsewhere in the Contract.

1.20-1.10.02—Facilities Construction - Compliance with Laws and Regulations: The Contractor shall conduct its operations in conformance with the permit requirements established by Federal, State and municipal laws and regulations.

The Department will be responsible for obtaining all environmental permits required for Contract work. If at the time such a permit is issued, its contents differ from those described in the Contract, the permit shall govern. Should the permit be issued after the solicitation of bid proposals, and should the permit requirements significantly change the character of the work as described in the Department's Project bid documents, Contract adjustments will be made in accordance with the applicable articles in Articles 1.20-1.04.01 through 1.20-1.04.07 of these specifications.

The Contractor shall be responsible for, and hold the State harmless from, any penalties or fines assessed by any authority due to the Contractor's failure to comply with any term of an applicable environmental permit.

Any request by the Contractor for the Department's authorization of an activity or use of a method not specifically called for or allowed by the applicable permits issued for the Project must be submitted by the Contractor in writing to the Engineer. Such a request must include a detailed description of the proposed alternate activity or method, and must include justifications for same, along with supporting documentation, showing that

the proposed alternate activity or method will not create a risk of damage to the environment, increase the permitted wetland impact footprint, or increase fill within a floodplain. If such request is granted by the Engineer, the Department will forward to the appropriate regulatory agency or agencies any permit modification, permit revision, *de minimis* change or new permit required for the Contractor to carry out the proposed alternate activity or method in question. The Department does not, however, guarantee that it will be able to obtain such approval from the regulatory agency or agencies; and the Department will not be liable for the effects of such inability to do so.

The Contractor will not be entitled to any extension of Contract time as a result of the Engineer's granting of such a request from the Contractor. If changes to the permit are not necessary except to accommodate changes requested by the Contractor, then no claim may be made by the Contractor based on the amount of time taken by the Department to review the Contractor's request or to secure approval of related permit changes from the regulatory agency or agencies. The proposed alternate activity or method shall not commence until and unless the Engineer has approved the Contractor's request.

1.20-1.10.03—Facilities Construction - Water Pollution Control: The Contractor shall, throughout the duration of the Contract, control and abate siltation, sedimentation and pollution of all waters, including but not limited to under-ground water systems, inland wetlands, tidal wetlands, and coastal or navigable waters.

Construction methods proposed by the Contractor must comply with the approved permit requirements and permit applications. The Contractor shall be responsible for all obligations and costs incurred as a result of the Contractor's failure to comply with the terms and conditions of such permits or permit applications.

The following are Required Best Management Practices for prevention and control of water pollution. Provisions of the Required Best Management Practices may be superseded as specified in Article 1.20-1.05.04. The Contractor shall not make any design change in the Contract work that requires a variance from the requirements of the following items until and unless the Contractor has first submitted a detailed written proposal for such variance to the Engineer for review by the Department and for transmittal to and review by the Federal, State or municipal environmental authority, and has then received written approval from the Department of the proposed variance.

REQUIRED BEST MANAGEMENT PRACTICES

1. Prior to commencing Project Site work, the Contractor shall submit in writing to the Engineer an “Erosion and Sedimentation Control Plan” and a “Dust Control Plan” for all Project construction stages. The Contractor shall install all control measures specified in said Plans prior to commencement of Project construction activities. The Plans shall be consistent with the 2002 Connecticut Guidelines for Soil Erosion and Sediment Control, the 2004 Connecticut Stormwater Quality Manual, and all environmental laws and regulations established by Federal, State or municipal agencies, as well as the Department's published environmental policies and standards. If the Contractor elects to work during a winter

shut-down period, the Contractor shall submit to the Engineer a separate Winter Erosion and Sedimentation Control Plan, obtain the Engineer's written approval of it, and implement it before the Contractor begins Project work during the winter shut-down period.

2. The Contractor shall inspect erosion and sedimentation controls at least weekly, immediately after each rainfall event of at least 0.1 inch, and daily during periods of prolonged rainfall. The Contractor shall maintain all erosion and sedimentation control devices in a functional condition, in accordance with the Contract plans, relevant permits, Special Provisions, and 2002 Connecticut Guidelines for Soil Erosion and Sediment Control. In the event that the Contractor fails to maintain such devices in accordance with said documents, and the Contractor does not correct such a failure within 24 hours after receipt of written notice of such a failure from the Engineer, the Department may proceed with its own or other forces to remedy such failures. The cost to the Department of curing any such specified failure will be deducted from monies owed to the Contractor under the Contract or under any other State contract.
3. Washout of applicators, containers, vehicles, and equipment that have been used with concrete (including bituminous concrete), paint or other such possible contaminants shall be conducted: (i) at least 50 ft from any stream, wetland or other sensitive resource; and (ii) in an entirely self-contained washout system. Such materials shall be collected and disposed of in accordance with all applicable Federal, State and municipal laws and regulations.
4. No materials resulting from Project construction activities shall be placed in or allowed to contribute to the degradation of a wetland, watercourse or storm drainage system. Good housekeeping of the Site by the Contractor for the purpose of preventing construction-related debris or runoff from entering a regulated area is required. The Contractor shall not leave waste or debris within the travel way or roadside where it might create a safety hazard to the traveling public. The Contractor shall dispose of all construction-related materials in accordance with Federal, State and municipal laws and regulations.
5. In accordance with CGS Section 22a-38, the Contractor shall not withdraw water from any watercourse system, except as allowed by applicable permits.
6. The Contractor shall not dispose of any material until and unless it has proposed a location for its disposal to the Engineer and the Engineer has approved said location in writing.

   If the proposed disposal location is on private property, the Contractor must include in the disposal location proposal to the Engineer letters from the property owner and the affected municipality, agreeing to the proposed location for disposal.

   The Contractor shall ensure that proposed disposal locations are outside of wetlands or watercourses, floodplains and water or natural resource areas.

7. Before commencing any work in or adjacent to a regulated area shown on the plans, permit(s), or identified by the Engineer, the Contractor must submit in writing to the Engineer a construction-sequencing plan, a water-handling plan, and a flood contingency plan, and obtain from the Engineer written approval of said plans..
8. When dewatering is necessary, the Contractor must not allow pumps used for same to discharge directly into a wetland or watercourse. Prior to any dewatering, the Contractor must submit to the Engineer a written proposal for specific methods and devices to be used for same, and must obtain the Engineer's written approval of such methods and devices, including, but not limited to, the pumping of water into a temporary sedimentation basin, providing surge protection at the inlet or outlet of pumps, floating the intake of a pump, or any other method for minimizing or retaining the suspended solids. If the Engineer determines that a pumping operation is causing turbidity in a regulated area, the Contractor shall halt said operation until a means of controlling the turbidity is submitted by the Contractor in writing to the Engineer, approved in writing by the Engineer, and implemented by the Contractor.
9. Whenever possible, work within or adjacent to watercourses shall be conducted during periods of low flow. The Engineer shall remain aware of flow conditions during the conduct of such work, and shall order such work stopped if flow conditions threaten to cause excessive erosion, siltation or turbidity. Before predicted major storms (*i.e.*, a storm predicted by NOAA Weather Service, with warnings of flooding, severe thunderstorms, or similarly severe weather conditions or effects), the Contractor shall make every effort to secure the Site to the satisfaction of the Engineer. Unless allowed by a DEEP permit, the Contractor shall store no materials and place no staging areas below the 100-year elevation. The Contractor shall not store below the 500-year flood level any materials which are buoyant, hazardous, flammable, explosive, soluble, expansive, radioactive, and any other materials that could be injurious to human, animal or plant life in the event of a flood.
10. Upon completion of the associated work, the Contractor shall immediately clear all areas of all forms, false work, piling, debris or other obstructions created or caused by construction operations.
11. If the Contractor wants to make a change in construction operations, staging or scheduling that would affect the use of or necessity for any pollution controls, the Contractor must submit to the Engineer a written proposal detailing them the proposed change, and must receive the Engineer's approval of such change, before implementing it. Such submission must include a plan showing what erosion and sedimentation controls above and beyond those called for in the Contract would be necessitated by the proposed change.
12. Dumping of oil, fuel, chemicals or other harmful materials on the ground or into a regulated area is forbidden. The Contractor shall provide to the

Engineer a written Spill Prevention and Remediation Plan for the Project, outlining the Contractor's intended means of catching, retaining, and properly disposing of drained oil, removed oil filters, fuel, chemicals and other harmful material. Such plan shall also include the information and protocols needed for the remediation of, any spill that might occur on the Site, including emergency contact information. No construction activities shall commence until such a plan has been approved in writing by the Engineer.

13. The Contractor shall restore all areas within or outside the State right-of-way that have been disturbed as a result of construction activities, in accordance with Article 1.20-1.08.11.

1.20-1.10.04—Facilities Construction - Vacant

1.20-1.10.05—Facilities Construction - Construction Noise Pollution: The Contractor shall take measures to minimize the noise caused by its construction operations, including but not limited to noise generated by equipment used for drilling, pile-driving, blasting, excavation or hauling.

All methods and devices employed to minimize noise shall be subject to the continuing approval of the Engineer. The maximum allowable level of noise at the residence or occupied building nearest to the Site shall be 90 decibels on the "A"-weighted scale (dBA). The Contractor shall halt any Project operation that violates this standard at any time until the Contractor develops and implements a methodology that enables it to keep the noise from its Project operations below the 90-dBA limit.

1.20-1.10.06—Facilities Construction - Protection of Archaeological and Paleontological Remains and Materials: The Contractor shall be alert to the possibility that Project operations may disturb or uncover significant archaeological or paleontological resources or other such remains which in many cases are protected by Federal laws, State laws or both. Archaeological resources are minimally defined by Federal regulations as materials 50 years of age or older. They typically consist of subsurface concentrations of metal, bone, ceramic, or flaked or other shaped stone artifacts. They might also consist of *features* such as buried building foundations, linear or circular walls made of individual stones rather than concrete or cement, trash-filled pits, patches of burned earth, or distinct patterns of nearly-circular, elliptical, or squared discolorations in newly-exposed soil, accompanied by the types of *artifacts* described above.

Paleontological resources are defined as any fossilized remains, traces, or imprints of organisms, preserved in or on the earth’s crust. These typically include fossilized bones, teeth, shells, eggs, or distinct impressions made in bedrock.

When archaeological or paleontological materials are inadvertently encountered, the Contractor shall immediately halt operations in the location of same and shall notify the Engineer of said discovery. The Contractor shall make every effort to preserve archaeological or paleontological materials intact in their original positions, in order to

preserve the geological context and information content of the remains in relation to one another and to the enclosing soil.

The Engineer shall have the authority to suspend Project work in the area of such discovery for the purpose of preserving or recovering and documenting the archaeological or paleontological materials. The Contractor shall carry out all instructions of the Engineer for the protection of such materials, including steps to protect the site from vandalism, unauthorized investigations, accidental damage, and damage from such causes as heavy rainfall or runoff. The Contractor shall reschedule its work to minimize any loss of the time needed to complete the Project while the State evaluates, records and salvages the archaeological or paleontological materials.

Extra work ordered by the Engineer in this connection will be paid for in accordance with Articles 1.20-1.04.05 and 1.20-1.09.04. Delays caused by archaeological or paleontological preservation and protection, which the Contractor demonstrates have delayed completion of the Project, will be treated under the provisions for extension of time, Article 1.20-1.08.08.

1.20-1.10.07—Facilities Construction - Controlled and Hazardous Materials: The Department will acquire any "Hazardous Waste Generator Permit(s)" required under the Resource Conservation and Recovery Act, for the management and disposal of hazardous materials on the Site, provided that

1. such material is within the construction limits defined in the Contract, and
2. such material was not generated by the Contractor.

If the Department has designated in the Contract an area of known or suspected contamination within the Project limits, the Contractor shall dispose of such material in accordance with the relevant Special Provisions.

In the event that the Contractor encounters or exposes any material, not previously known or suspected to be contaminated, but exhibiting properties that may indicate the presence of controlled or hazardous material, the Contractor shall cease all operations in the material's vicinity and shall immediately notify the Engineer of the material's discovery. The presence of barrels, discolored earth, metal, wood, visible fumes or smoke, abnormal odors or excessively hot earth may indicate the presence of controlled or hazardous material, and the Contractor shall treat it with extreme caution.

If controlled or hazardous materials, other than those required for Contract operations, are discovered at the Site, the Department may engage a specialty contractor to handle and dispose of the materials.

When the Contractor performs support work incidental to the removal, treatment or disposal of controlled or hazardous material, the Department will pay for same at the applicable Contract unit prices. When the Contract does not include appropriate pay items for such work, the Department will pay for it in accordance with Article 1.20-1.04.05.

The Contractor shall observe all security precautions established pursuant to 29 CFR 1910.120 and 1926.65, including all revisions and amendments thereof, and shall not work in any area known to contain or suspected of containing controlled or hazardous material without prior written approval to do so from the Engineer.

The Contractor shall assume sole responsibility for the proper storage, handling,

management, and disposal of all regulated materials and wastes associated with its operations, including, but not limited to, lubricants, antifreeze, engine fluids, paints, and solvents. All costs associated with any failure by the Contractor to properly manage such materials in accordance with Federal, State and municipal regulations, and all remedial and punitive costs incurred by the Department as a result of such failure by the Contractor, shall be borne by the Contractor.

This article does not apply to coatings removed by the Contractor.

1.20-1.10.08–Facilities Construction - Vehicle Emissions: All motor vehicles and construction equipment used for the Project (both on-highway and off-road) shall comply with all Federal, State and municipal regulations concerning exhaust emission controls or safety.

The Contractor shall establish staging zones for vehicles waiting to load or unload at the Site. Such zones shall be located where the emissions from the vehicles will have minimum impact on abutting properties and the general public.

Idling of delivery trucks, dump trucks, and other equipment shall not be permitted for longer than 3 minutes during periods of non-activity, except as allowed by the Regulations of Connecticut State Agencies Section 22a-174-18(b)(3)(c):
No mobile source engine shall be allowed "*to operate for more than 3 consecutive minutes when the mobile source is not in motion, except as follows:*

1. *When a mobile source is forced to remain motionless because of traffic conditions or mechanical difficulties over which the operator has no control,*
2. *When it is necessary to operate defrosting, heating or cooling equipment to ensure the safety or health of the driver or passengers,*
3. *When it is necessary to operate auxiliary equipment that is located in or on the mobile source to accomplish the intended use of the mobile source,*
4. *To bring the mobile source to the manufacturer's recommended operating temperature,*
5. *When the outdoor temperature is below 20°F*
6. *When the mobile source is undergoing maintenance that requires such mobile source be operated for more than 3 consecutive minutes, or*
7. *When a mobile source is in queue to be inspected by U.S. military personnel prior to gaining access to a U.S. military installation.*"

The Contractor shall conduct all of its Project work in a way that causes no harm to adjacent sensitive receptors. Sensitive receptors include but are not limited to hospitals, schools, daycare facilities, elderly housing, and convalescent facilities. The Contractor shall see to it that any engine exhaust is not directed toward fresh air intakes, air conditioners, or windows.

Before performing extensive work within less than 50 ft of a sensitive receptor, the Contractor must (1) submit to the Engineer a Vehicle Emissions Mitigation plan, proposing detailed means for minimizing vehicle emissions from vehicles and construction equipment in the affected area, including a proposed sequence of construction; (2) obtain the Engineer's written approval of the Plan, making any revisions of same necessary to obtain said permission; and (3) implement the Plan, as it may have been revised.

Any costs associated with this “Vehicle Emissions” Article shall be included in the general cost of the Contract. In addition, there shall be no additional time granted to the Contractor for compliance with this Article. The Contractor’s compliance with this Article and any associated laws or regulations shall not be grounds for claims as outlined in Article 1.20-1.11.01 through 1.20-1.11.06 of these specifications.

SECTION 1.20-1.11
CLAIMS FOR
FACILITIES CONSTRUCTION

1.20-1.11.01—Facilities Construction - General
1.20-1.11.02—Facilities Construction - Notice of Claim
1.20-1.11.03—Facilities Construction - Record Keeping
1.20-1.11.04—Facilities Construction - Claim Compensation
1.20-1.11.05—Facilities Construction - Required Claim Documentation
1.20-1.11.06—Facilities Construction - Auditing of Claims

1.20-1.11.01—Facilities Construction - General: When filing a formal claim under Section 4-61 (referred to as “Section 4-61” below) of the C.G.S. (as revised), either as a lawsuit in the Superior Court or as a demand for arbitration, the Contractor must follow the procedures and comply with the requirements set forth in this Section of the Specifications. This Section does not, unless so specified, govern informal claims for additional compensation which the Contractor may bring before the Department. The Contractor should understand, however, that the Department may need, before the Department can resolve such a claim, the same kinds of documentation and other substantiation that it requires under this Section. It is the intent of the Department to compensate the Contractor for actual increased costs caused by or arising from acts or omissions on the part of the Department that violate legal or contractual duties owed to the Contractor by the Department.

1.20-1.11.02—Facilities Construction - Notice of Claim: Whenever the Contractor intends to file a formal claim against the Department under Section 4-61, seeking compensation for additional costs, the Contractor shall notify the Commissioner in writing (in strict compliance with Section 4-61) of the details of said claim. Such written notice shall contain all pertinent information described in Article 1.20-1.11.05 below.

Once formal notice of a claim under C.G.S. Section 4-61 (b) (as revised) has been given to the Commissioner, the claimant may not change the claim in any way, in either concept or monetary amount, (1) without filing a new notice of claim and demand for arbitration to reflect any such change and (2) without the minimum period of six months after filing of the new demand commencing again and running before any hearing on the merits of the claim may be held. The only exception to this limitation will be for damages that continue to accrue after submission of the notice, in ways described and anticipated in the notice.

1.20-1.11.03—Facilities Construction - Record Keeping: The Contractor shall keep daily records of all costs incurred in connection with its construction-related activities on

behalf of the Department. These daily records shall identify each aspect of the Project affected by matters related to any claim for additional compensation that the Contractor has filed, intends to file, or has reason to believe that it may file against the Department; the specific Project locations where Project work has been so affected; the number of people working on the affected aspects of the Project at the pertinent time(s); and the types and number of pieces of equipment on the Project site at the pertinent time(s). If possible, any potential or anticipated effect on the Project's progress or schedule which may result in a claim by the Contractor should also be noted contemporaneously with the cause of the effect, or as soon thereafter as possible.

1.20-1.11.04—Facilities Construction - Claim Compensation: The payment of any claim, or any portion thereof, that is deemed valid by the Engineer shall be made in accordance with the following provisions of this Article:

(a) Compensable Items: The liability of the Department for claims will be limited to the following specifically-identified items of cost, insofar as they have not otherwise been paid for by the Department, and insofar as they were caused solely by the actions or omissions of the Department or its agents (except that with regard to payment for extra work, the Department will pay to the Contractor the mark-ups provided for in Article 1.20-1.04.05):

(1) Additional Project-site labor expenses.
(2) Additional costs for materials.
(3) Additional, unabsorbed Project-site overhead (**e.g.**, for mobilization and demobilization).
(4) Additional costs for active equipment.
(5) For each day of Project delay or suspension caused solely by actions or omissions of the Department, either
    i an additional 10% of the total amount of the costs identified in Subarticles (1) through (4) above; except that if the delay or suspension period prevented the Contractor from incurring enough Project costs under Subarticles (1) through (4) during that period to require a payment by the Department that would be greater than the payment described in subparagraph ii below, then the payment for affected home office overhead and profit shall instead be made in the following *per diem* amount:
    ii 6% of the original total Contract amount divided by the original number of days of Contract time.

Payment under either subparagraph i or ii hereof shall be deemed to be complete and mutually-satisfactory compensation for any unabsorbed home office overhead and any profit related to the period of delay or suspension.

(6) Additional equipment costs. Only actual equipment costs shall be used in the calculation of any compensation to be made in response to claims for additional Project compensation. Actual equipment costs shall be based upon records kept in the normal course of business and in accordance with generally-accepted accounting principles. Under no circumstances shall Blue Book or other guide or rental rates be used for this purpose (unless the Contractor had to rent the equipment from an unrelated party, in which case the actual rental charges paid

by the Contractor, so long as they are reasonable, shall be used). Idle equipment, for instance, shall be paid for based only on its actual cost to the Contractor.

(7) Subcontractor costs limited to, and determined in accordance with, Subarticles (1), (2), (3), (4), and (5) above and applicable statutory and case law. Such subcontractor costs may be paid for by the Department only (a) in the context of an informal claims settlement or (b) if the Contractor has itself paid or legally-assumed, present unconditional liability for those subcontractor costs.

(b) Non-Compensable Items: The Department will have no liability for the following specifically-identified non-compensable items:

(1) Profit, in excess of that provided for herein.
(2) Loss of anticipated profit.
(3) Loss of bidding opportunities.
(4) Reduction of bidding capacity.
(5) Home office overhead in excess of that provided for in Subarticle 1.20-1.11.04(a)(5) hereof.
(6) Attorney's fees, claims preparation expenses, or other costs of claims proceedings or resolution.
(7) Any other consequential or indirect expenses or costs, such as tort damages, or any other form of expense or damages not provided for in these Specifications or elsewhere in the Contract.

1.20-1.11.05—Facilities Construction - Required Claim Documentation: All claims shall be submitted in writing to the Commissioner, and shall be sufficient in detail to enable the Engineer to ascertain the basis and the amount of each claim, and to investigate and evaluate each claim in detail. As a minimum, the Contractor must provide the following information for each and every claim and sub-claim asserted:

(a) A detailed factual statement of the claim, with all dates, locations and items of work pertinent to the claim.
(b) A statement of whether each requested additional amount of compensation or extension of time is based on provisions of the Contract or on an alleged breach of the Contract. Each supporting or breached Contract provision and a statement of the reasons why each such provision supports the claim, must be specifically identified or explained.
(c) Excerpts from manuals or other texts which are standard in the industry, if available, that support the Contractor's claim.
(d) The details of the circumstances that gave rise to the claim.
(e) The date(s) on which any and all events resulting in the claim occurred, and the date(s) on which conditions resulting in the claim first became evident to the Contractor.
(f) Specific identification of any pertinent document, and detailed description of the substance of any material oral communication, relating to the substance of such claim.
(g) If an extension of time is sought, the specific dates and number of days for which it is sought, and the basis or bases for the extension sought. A critical path

method, bar chart, or other type of graphical schedule that supports the extension must be submitted.

(h) When submitting any claim over $50,000, the Contractor shall certify in writing, under oath and in accordance with the formalities required by the contract, as to the following:

(1) That supporting data is accurate and complete to the Contractors best knowledge and belief;

(2) That the amount of the dispute and the dispute itself accurately reflects what the Contractor in good faith believes to be the Departments liability;

(3) The certification shall be executed by:

a. If the Contractor is an individual, the certification shall be executed by that individual.

b. If the Contractor is not an individual, the certification shall be executed by a senior company official in charge at the Contractor's plant or location involved or an officer or general partner of the Contractor having overall responsibility for the conduct of the Contractors affairs.

1.20-1.11.06—Facilities Construction - Auditing of Claims: All claims filed against the Department shall be subject to audit by the Department or its agents at any time following the filing of such claim. The Contractor and its subcontractors and suppliers shall cooperate fully with the Department's auditors. Failure of the Contractor**,** its subcontractors, or its suppliers to maintain and retain sufficient records to allow the Department or its agents to fully evaluate the claim shall constitute a waiver of any portion of such claim that cannot be verified by specific, adequate, contemporaneous records, and shall bar recovery on any claim or any portion of a claim for which such verification is not produced. Without limiting the foregoing requirements, and as a minimum, the Contractor shall make available to the Department and its agents the following documents in connection with any claim that the Contractor submits:

(1) Daily time sheets and project superintendent's daily reports.
(2) Union agreements, if any.
(3) Insurance, welfare, and benefits records.
(4) Payroll register.
(5) Earnings records.
(6) Payroll tax returns.
(7) Records of property tax payments.
(8) Material invoices, purchase orders, and all material and supply acquisition contracts.
(9) Materials cost distribution worksheets.
(10) Equipment records (list of company equipment, rates, etc.).
(11) Vendor rental agreements
(12) Subcontractor invoices to the Contractor, and the Contractor's certificates of payments to subcontractors
(13) Subcontractor payment certificates.
(14) Canceled checks (payroll and vendors).
(15) Job cost reports.

(16) Job payroll ledger.
(17) General ledger, general journal (if used), and all subsidiary ledgers and journals, together with all supporting documentation pertinent to entries made in these ledgers and journals.
(18) Cash disbursements journals.
(19) Financial statements for all years reflecting the operations on the Project.
(20) Income tax returns for all years reflecting the operations on the Project.
(21) Depreciation records on all company equipment**,** whether such records are maintained by the company involved, its accountant, or others.
(22) If a source other than depreciation records is used to develop costs for the Contractor's internal purposes in establishing the actual cost of owning and operating equipment, all such other source documents.
(23) All documents which reflect the Contractor's actual profit and overhead during the years that the Project was being performed**,** and for each of the five years prior to the commencement of the Project.
(24) All documents related to the preparation of the Contractor's bid, including the final calculations on which the bid was based.
(25) All documents which relate to the claim or to any sub-claim, together with all documents that support the amount of damages as to each claim or sub-claim.
(26) Worksheets used to prepare the claim, which indicate the cost components of each item of the claim, including but not limited to the pertinent costs of labor, benefits and insurance, materials, equipment, and subcontractors' damages, as well as all documents which establish the relevant time periods, individuals involved, and the Project hours and the rates for the individuals.
(27) The name, function, and pertinent activity of each Contractor's or subcontractor's official, or employee involved in or knowledgeable about events that give rise to, or facts that relate to, the claim.
(28) The amount(s) of additional compensation sought and a break-down of the amount(s) into the categories specified as payable under Article 1.20-1.11.04 above.
(29) The name, function, and pertinent activity of each Department official, employee or agent involved in or knowledgeable about events that give rise to, or facts that relate to, the claim.

SECTION 1.20-9.75
MOBILIZATION FOR
FACILITIES CONSTRUCTION

1.20-9.75.01—Facilities Construction - Mobilization Description
1.20-9.75.04—Facilities Construction - Mobilization Method of Measurement

1.20-9.75.01—Facilities Construction - Mobilization Description: This item consists of:

1. all work necessary for moving Project personnel and equipment to the Project Site;
2. all work necessary for the establishment of the Contractors' field offices,

buildings and other facilities necessary for Contract performance;

3. the preparation of work plans and other documents that must be submitted by the Contractor to the Department prior to the start of physical Project construction. These initial submittals are identified elsewhere in the Contract and may include Project schedules, Project management plans, staging and storage areas, safety plans, quality control plans, erosion and sedimentation control plans, and other documents addressing general Project sequencing or management;
4. demobilization of plant and equipment;
5. completion of all physical work, and
6. completion of administrative closeout items as required by the Contract.

1.20-9.75.04—Facilities Construction - Mobilization Method of Measurement: Mobilization as defined in Article 1.20-1.03.01 will be paid in the manner described hereinafter; however, the determination of the total Contract amount earned shall not include the amount of mobilization earned during the period covered by the current monthly estimate – but shall include amounts previously earned and certified for payment:

1. When the first payment estimate is made, 25% of the “Mobilization” line item will be certified for payment.
2. When the Baseline Schedule, as specified under Article 1.20-1.05.08, is accepted, 50% of the “Mobilization” line item, minus any previous payments, will be certified for payment.
3. When 10% of the total original Contract price is earned and the Baseline Schedule, as specified under Article 1.20-1.05.08, is accepted, 75% of the “Mobilization” line item, minus any previous payments, will be certified for payment.
4. When 30% of the total original Contract price is earned and the Baseline Schedule, as specified under Article 1.20-1.05.08, is accepted, 100% of the “Mobilization” line item, minus any previous payments, will be certified for payment.

Project Closeout as defined in Article 1.20-1.03.01 shall include demobilization of plant and equipment, completion of all physical work, and administrative closeout items necessary to satisfy all Contract requirements. Project Closeout will be paid in the manner described hereinafter:

- When the non-administrative Project completion requirements (as specified under Article 1.20-1.08.13) and the administrative completion requirements (as specified under Article 1.20-1.08.14) have been satisfied, 100%t of the “Project Closeout” line item will be certified for payment.

CONNECTICUT
SUPPLEMENTAL SPECIFICATION
SECTION 2.02
ROADWAY EXCAVATION, FORMATION OF EMBANKMENT AND DISPOSAL OF SURPLUS MATERIAL

2.02.01—Description:

In the first sentence, insert ", swales" *between* "channels" *and* "and other miscellaneous construction to the ..."

2.02.03—Construction Methods:

In the second paragraph under Subarticle 6. "Compaction" *add the following after the first sentence:*

" Field testing will be performed in accordance with AASHTO T 310 and ASTM D6938 as indicated in the latest edition of the 'Minimum Schedule for Acceptance Testing.'"

2.02.04—Method of Measurement:

In the second to last Paragraph, replace the last sentence with the following:

"Bituminous parking areas are considered as bituminous concrete pavement."

CONNECTICUT
SUPPLEMENTAL SPECIFICATION
SECTION 2.05
TRENCH EXCAVATION

2.05.01—Description:

In Paragraph 2, delete the only sentence and replace with the following:

"2) The removal of stormwater drainage structures, stormwater pipes and appurtenances beyond the limits of the roadway and structure excavation."

In Subarticle 2, Rock in Trench, delete the only sentence and replace with the following:

"(2) Rock, insofar as it applies to trench excavation, shall be defined as rock in definite ledge formation, boulders, or portions of boulders, cement masonry structures, concrete structures, reinforced concrete pipe, Portland cement concrete pavement or base, of 1/2 cubic yard (0.5 cubic meters) or more in volume, removed as indicated or directed from within the payment lines for trench excavation."

2.05.04—Method of Measurement:

In the first sentence under **Horizontal Payment Limits** *insert* "culvert ends," *between* "pipe culverts," *and* "pipe arches,"

2.05.05—Basis of Payment:

*In Paragraph 13 - Delete the entire sentence "*There will be no direct payment for the plugging of existing pipes...*" and replace it with the following:*

"There will be no direct Payment for the plugging of existing pipes, removal and disposal of metal or plastic pipes or for the breaking up of floors in drainage structures being abandoned. The cost shall be included in the contract unit prices of the drainage and excavation items."

CONNECTICUT
SUPPLEMENTAL SPECIFICATION
SECTION 2.11
ANTI-TRACKING PAD

Add the following Section:

SECTION 2.11
ANTI-TRACKING PAD

2.11.01—Description
2.11.02—Materials
2.11.03—Construction Methods
2.11.04—Method of Measurement
2.11.05—Basis of Payment

2.11.01—Description: This work shall consist of furnishing, installing, maintaining and removing a crushed stone anti-tracking pad on geotextile filter fabric. All areas affected by the anti-tracking pad shall be restored to the original or plan contours. If shown on the plans or ordered by the Engineer, the restored areas shall be stabilized with turf establishment.

2.11.02—Materials:
The crushed stone shall meet the grading requirements of Article M.01.01 for 2-in (50 mm) (No. 3) coarse aggregate.
Geotextile filter fabric shall meet the requirements of Section 7.55 and Subarticle M.08.01-19.
Topsoil, if necessary, shall meet the requirements of Article M.13.01.
Seed, if necessary, shall meet the requirements of Article M.13.04.
Fertilizer, if necessary, shall meet the requirements of Article M.13.03.
Mulch, if necessary, shall meet the requirements of Article M.13.05

2.11.03—Construction Methods: Clear area of anti-tracking pad of all vegetation and excavate to a minimum depth of 4 in (100 mm). Place geotextile filter fabric over the full width and length of excavated area and cover with No. 3 crushed stone to a minimum depth of 4 in (100 mm).
The anti-tracking pad shall be uniformly graded to produce the entry and exit path to the Site for all construction equipment. The pad shall be maintained of sufficient grading and stone surface to capture all soils and sediment from equipment tires prior to such exiting from the site.
Crushed stone shall be replenished or replaced as necessary or as ordered by the Engineer to assure sufficient capture of sediment at the construction site. Any sediment or crushed stone tracked off the site shall be immediately cleaned, swept and removed by the Contractor at no cost to the State.

2.11.04—Method of Measurement: This work will be measured for payment by the number of square yards (square meters) of accepted anti-tracking pad completed as shown on the plans or as ordered by the Engineer.

2.11.05—Basis of Payment: Payment for this work will be made at the Contract unit price per square yard (square meter) for “Anti-Tracking Pad,” which shall include furnishing and placing all material, including the geotextile; for maintaining the anti-tracking pad during the Project construction period; for removing the anti-tracking pad after completion of the Project; for restoring the site, including any required turf establishment; and for all labor, equipment, tools, and incidentals required to complete the work as well as the cleaning and sweeping of any sediment or crushed stone tracked off site.

Clearing and grubbing required to install the anti-tracking pad will be paid under the item "Clearing and Grubbing."

Pay Item	Pay Unit
Anti-Tracking Pad	s.y. (s.m.)

CONNECTICUT
SUPPLEMENTAL SPECIFICATION
SECTION 2.12
SUBBASE

2.12.02—Materials:

Delete the second sentence: "Grading 'B' shall be used."

2.12.03—Construction Methods:

At the end of the third paragraph add the following:

" Field testing will be performed in accordance with AASHTO T 310 and ASTM D6938 as indicated in the latest edition of the 'Minimum Schedule for Acceptance Testing.'"

CONNECTICUT
SUPPLEMENTAL SPECIFICATION
SECTION 2.16
PERVIOUS STRUCTURE BACKFILL

2.16.01—Description:

Add the following sentence after the only sentence:

"This item shall also consist of furnishing and placing crushed stone or gravel in permeable material bags at the inlet ends of weep holes in structures to the dimensions indicated on the plans or as ordered by the Engineer."

2.16.02—Materials:

Add the following paragraph after the only sentence:

" The materials for bagged stone shall meet to the following requirements:

1. The crushed stone or gravel shall conform to the grading requirements of Article M.01.01 for No. 3 or No. 4 coarse aggregate or a mixture of both.
2. The bag shall be of permeable material sized to contain 1 c.f. (0.03 cu.m) of loosely packed granular material."

2.16.03—Construction Methods:

Add the following sentence at the end of the eighth paragraph:

" Field testing will be performed in accordance with AASHTO T 310 and ASTM D6938 as indicated in the latest edition of the 'Minimum Schedule for Acceptance Testing.'"

Add the following paragraph:

" Where weep holes are installed, bagged stone shall be placed around the inlet end of each weep hole, to prevent movement of the pervious material into the weep hole. Approximately 1 c.f. (0.03 cu.m) of crushed stone or gravel shall be enclosed in each of the permeable material bags. All bags shall then be securely tied at the neck with cord or wire so that the enclosed material is contained loosely. The filled bags shall be stacked at the weep holes to the dimensions shown on the plans or as directed by the Engineer. The bags shall be unbroken at the time pervious material is placed around them, and bags which are broken or burst prior to or during the placing of the pervious material shall be replaced at the Contractor's expense."

2.16.04—Method of Measurement:

Add the following paragraph after the only paragraph:

“ There will be no direct payment for bagged stone, but the cost thereof shall be included in the cost of the work for “Pervious Structure Backfill.””

CONNECTICUT
SUPPLEMENTAL SPECIFICATION
SECTION 2.18
SEDIMENTATION CONTROL BALES

Delete the entire section.

CONNECTICUT
SUPPLEMENTAL SPECIFICATION
SECTION 2.19
SEDIMENTATION CONTROL SYSTEM

2.19.02—Materials:

Delete the entire article and replace with the following:

" **2.19.02—Materials:** The sedimentation control system materials for this work shall meet the following requirements:

Hay bales shall be made of hay with 40 lb. (18 kg) minimum weight, and 120 lb. (54 kg) maximum weight, held together by twine or wire.

Geotextile shall meet the requirements of Sections 7.55 and M.08."

2.19.03—Construction Methods:

Delete the entire article and replace with the following:

" **2.19.03—Construction Methods:** Sedimentation Control Systems shall be installed by the Contractor in locations shown on the plans or as directed by the Engineer.

Hay bale systems shall be installed lengthwise along the contour with ends of adjacent bales tightly abutting each other. All hay bales shall be installed so that bindings are oriented around the sides, rather than along the tops and bottoms. Each hay bale shall be entrenched 4 in (100 mm) deep and backfilled, with the backfilled soil placed toward the potential silt source. They shall be held in place by 2 wooden stakes in each hay bale and each wooden stake shall be driven 18 in (450 mm) deep into the ground. Gaps shall be filled with hay or straw to prevent water or debris escaping between bales.

Geotextile systems shall be installed along the contour so that the bottom 6 in of the fabric is buried by either trenching or by laying the 6-in (150 mm) section horizontally on the ground and burying by ramping the soil up to the control fence. All geotextile fences shall be exposed at least 30 high as installed. Spacing between posts shall not exceed 10 ft (3m) and all wooden posts shall be driven a minimum of 12 in (300 mm) deep into the ground. When joints between sections of geotextile sedimentation control systems are necessary, geotextile shall be spliced together only at a support post, with a minimum 6-in (150 mm) overlap, and securely sealed.

When trench excavation of a hay bale or geotextile fence is obstructed by an occasional stone or tree root, provide a smooth transition between the trench bottom and the obstruction.

Clean out of accumulated sediment shall be accomplished when half of the original height of the hay bales or geotextile fence as installed becomes filled with sediment, or as directed by the Engineer.

Hay bales or geotextile fence systems shall be maintained or replaced until they are no longer necessary for the purpose intended or are ordered removed from the Site at

the completion of the Project when full stabilization has occurred, unless specifically authorized by the Engineer to be left in place."

2.19.05—Basis of Payment:

Change the last sentence to read as follows:

" No additional payment will be made for the clean out of accumulated sediment."

CONNECTICUT
SUPPLEMENTAL SPECIFICATION
SECTION 3.02
ROLLED GRANULAR BASE

Delete the entire article.

CONNECTICUT
SUPPLEMENTAL SPECIFICATION
SECTION 3.03
CONCRETE BASE

Delete the entire article.

CONNECTICUT
SUPPLEMENTAL SPECIFICATION
SECTION 3.04
PROCESSED AGGREGATE BASE

Delete the entire Section and replace it with the following:

" **3.04.01—Description:** The base shall consist of a foundation constructed on the prepared subbase or subgrade in accordance with these specifications and in conformity with the lines, grades, compacted thickness and typical cross-section as shown on the plans.

3.04.02—Materials: All materials for this work shall conform to the requirements of Article M.05.01.

3.04.03—Construction Methods: Only one type of coarse aggregate shall be used on a Project unless otherwise permitted by the Engineer.

Prior to placing the processed aggregate base, the prepared subbase or subgrade shall be maintained true to line and grade, for a minimum distance of 200 ft (60 m) in advance of the work. None of the aggregate courses shall be placed more than 500 ft (150 m) ahead of the compaction and binding operation on that particular course.

The processed aggregate base shall be spread uniformly by a method approved by the Engineer. The thickness of each course shall not be more than 4 in (100 mm) after compaction, unless otherwise ordered.

After the aggregate is spread, it shall be thoroughly compacted and bound by use of equipment specifically manufactured for that purpose. Rollers shall deliver a ground pressure of not less than 300 lbs/in (52.5 N/mm) of contact width and shall have a weight (mass) not less than 10 t (9100 kg). Vibratory units shall have a static weight (mass) of not less than 4 t (3650 kg). Water may be used during the compaction and binding operation and shall be applied from an approved watering device. The compacting and binding operation shall begin at the outside edges, overlapping the shoulders for a distance of not less than 6 in (150 mm) and progress towards the middle, parallel with the centerline of the pavement. The work shall cover the entire surface of the course with uniform overlapping of each preceding track or pass. Areas of super-elevation and special cross slope shall be compacted by beginning at the lowest edge and proceeding towards the higher edge, unless otherwise directed by the Engineer. The compacting and binding operation shall be continued until the voids in the aggregates have been reduced to provide a firm and uniform surface satisfactory to the Engineer. The amount of compactive effort shall in no case shall be less than four (4) complete passes of the compacting and binding operations. All aggregate shall be completely compacted and bound at the end of each day's work or when traffic is to be permitted to operate on the road. The dry density of each layer of processed aggregate base after compaction shall not be less than ninety-five percent (95%) of the dry density

for that material when tested in accordance with AASHTO T180, Method D. Field testing will be performed in accordance with AASHTO T 310 and ASTM D6938 as indicated in the latest edition of the "Minimum Schedule of Acceptance Testing."

Should the subbase or subgrade material become churned up or mixed with the processed aggregate base at any time, the Contractor shall, without additional compensation remove the mixture. The Contractor shall add new subbase material, if required, and reshape and recompact the subbase in accordance with the requirements of Article 2.12.03. New aggregate material shall be added, compacted and bound, as hereinbefore specified, to match the surrounding surface.

Any surface irregularities which develop during, or after work on each course, shall be corrected by loosening material already in place and removing or adding aggregate as required. The entire area, including the surrounding surface, shall be re-compacted and rebound until it is brought to a firm and uniform surface satisfactory to the Engineer.

3.04.04—Method of Measurement: Processed Aggregate Base will be measured horizontally in-place after final grading and compaction. Materials placed beyond the horizontal limits indicated on the plans will not be measured for payment.

The total thickness shall be as indicated on the plans, or as ordered by the Engineer and within a tolerance of minus three-fourths of an inch (-$^{3}/_{4}$") to plus one-half inch (+ $^{1}/_{2}$") (-19 mm to +13 mm).

Measurements to determine the thickness will be taken by the Engineer at intervals of 500 ft (150 m) or less, along lanes, and shall be considered representative of the lane. For the purpose of these measurements, a shoulder will be considered a lane.

If a thickness measurement is taken and found deficient, additional measurements considered necessary by the Engineer will be taken to determine the longitudinal limits of the deficiency. Areas not within allowable tolerances shall be corrected, as ordered by the Engineer, without additional compensation to the Contractor.

3.04.05—Basis of Payment: This work will be paid for at the Contract unit price per cubic yard (cubic meter) for "Processed Aggregate Base," complete in place, which price shall include all materials, tools, equipment and work incidental thereto.

Pay Item	Pay Unit
Processed Aggregate Base	c.y. (cu.m)"

CONNECTICUT
SUPPLEMENTAL SPECIFICATION
SECTION 4.01
CONCRETE FOR PAVEMENT

Article 4.01.03—Construction Methods:

Replace Subarticle A. "Composition" with the following:

" **A. Material Documentation, Transportation and Testing:** All material delivered to the Project shall be documented, transported and testing in accordance with Subarticle 6.01.03-3 Transportation and Delivery of Concrete and Subarticle 6.01.03-4 Acceptance Testing and Test Specimens. The plastic properties for concrete pavement shall conform to the standard mix properties as indicated in Subarticle 6.01.03-4a.
In addition, the air content of the plastic concrete shall be determined in accordance with AASHTO Method T152, Pressure Method. No alternative method is acceptable."

Delete Subarticles B, C, D and E.

Change Subarticle F "Placing Concrete" to be Subarticle B and as follows:

Article 4.01.03-B. Placing Concrete:

3. Placement:

In the last sentence of the first paragraph, change "... tested in accordance with 4.01.03-I ..." *to read* "... tested in accordance with Subarticle 4.01.03-D ..."

6. Joints:
(e) Load Transfer Devices:

Change the only sentence as follows:

"Load transfer devices shall conform to the requirements of Article M.03.08."

7. Curing:

(a) Liquid Membrane-Forming Cure:

Change the first sentence as follows:

"The liquid curing compound shall conform to Subarticle M.03.04-3."

(b) Moist Curing:

Change the end of the first sentence as follows:

"... moist mats of the size and quality specified in Subarticle M.03.04-2."

(c) Cover Sheet Curing:

Change the end of the first sentence as follows:

"... paper or polyethylene cover sheets conforming to Subarticle M.03.04-4."

Change Subarticle G "Protection of Pavement" to be Subarticle C.

Change Subarticle H "Riding Surface Tests" to be Subarticle D.

Change Subarticle I "Flexural Testing of Concrete" to be Subarticle E.

Change Subarticle J "Opening to Traffic" to be Subarticle F.

CONNECTICUT
SUPPLEMENTAL SPECIFICATION
SECTION 4.03
COLD RECLAIMED ASPHALT PAVEMENT

Delete the entire section.

CONNECTICUT
SUPPLEMENTAL SPECIFICATION
SECTION 4.06
BITUMINOUS CONCRETE

Delete the entire Section and replace it with the following:

SECTION 4.06
BITUMINOUS CONCRETE

4.06.01—Description
4.06.02—Materials
4.06.03—Construction Methods
4.06.04—Method of Measurement
4.06.05—Basis of Payment

4.06.01—Description: Work under this Section shall include the production, delivery and placement of a non-segregated, smooth and dense bituminous concrete mixture brought to proper grade and cross section. This Section shall also include the method and construction of longitudinal joints. The Contractor shall furnish ConnDOT with a Quality Control Plan (QCP) as described in Article 4.06.03.

The following terms as used in this specification are defined as:

Bituminous Concrete: A concrete material that uses a bituminous material (typically asphalt) as the binding agent and stone and sand as the principal aggregate components. Bituminous concrete may also contain any of a number of additives engineered to modify specific properties and/or behavior of the concrete material. For the purposes of this Section, references to bituminous concrete apply to all of its sub-categories, for instance those defined on the basis of production and placement temperatures, such as hot-mix asphalt (HMA) or warm-mix asphalt (WMA), or those defined on the basis of composition, such as those containing polymer-modified asphalt (PMA).

Course: A lift or multiple lifts comprised of the same bituminous concrete mixture placed as part of the pavement structure.

Density Lot: All material placed in a single lift and as defined in Article 4.06.03.

Disintegration: Wearing away or fragmentation of the pavement. Disintegration will be evident in the following forms: Polishing, weathering-oxidizing, scaling, spalling, raveling, potholes or loss of material.

Dispute Resolution: A procedure used to resolve conflicts resulting from discrepancies between the Engineer and the Contractor's density results that may affect payment.

Hot Mix Asphalt (HMA): A bituminous concrete mixture typically produced at 325°F.

Lift: An application of a bituminous concrete mixture placed and compacted to a specified thickness in a single paver pass.

Polymer Modified Asphalt (PMA): A bituminous concrete mixture containing a polymer modified asphalt binder in accordance with contract specifications. All PMA mixtures shall incorporate a qualified warm mix technology.

Production Lot: All material placed during a continuous daily paving operation.

Quality Assurance (QA): All those planned and systematic actions necessary to provide confidence that a product or facility will perform as designed.

Quality Control (QC): The sum total of activities performed by the vendor (Producer,

Manufacturer, and Contractor) to ensure that a product meets contract requirements.
Superpave: A bituminous concrete mix design used in mixtures designated as “S*” Where “S” indicates Superpave and * indicates the sieve related to the nominal maximum aggregate size of the mix.
Segregation: A non-uniform distribution of a bituminous concrete mixture in terms of gradation, temperature, or volumetric properties.
Warm Mix Asphalt (WMA): A bituminous concrete mixture that can be produced and placed at reduced temperatures than HMA using a qualified additive or technology.

4.06.02—Materials: All materials shall meet the requirements of Section M.04.

1. Materials Supply: The bituminous concrete mixture must be from 1 source of supply and originate from 1 Plant unless authorized by the Engineer. Bituminous Concrete plant Quality Control Plan (QCP) requirements are defined in Section M.04.

2. Recycled Materials: Reclaimed Asphalt Pavement (RAP), Crushed Recycled Container Glass (CRCG), Recycled Asphalt Shingles (RAS), or crumb rubber (CR) from recycled tires may be incorporated in bituminous concrete mixtures in accordance with Section M.04 and Project Specifications. CRCG and RAS shall not be used in the surface course.

4.06.03—Construction Methods:

1. Material Documentation: All vendors producing bituminous concrete must have their truck-weighing scales, storage scales, and mixing plant automated to provide a detailed ticket which shall be given to the Engineer. Delivery tickets shall include the following information:

a. State of Connecticut printed on ticket.
b. Name of producer, identification of plant, and specific storage bin (silo) if used.
c. Date and time of day.
d. Mixture Designation; Mix type and level. Curb mixtures for machine-placed curbing must state "curb mix only."
e. If RAP is used, the plant printouts shall include the RAP dry weight, percentage and daily moisture content.
f. If RAS is used, the plant printouts shall include the RAS dry weight and percentage daily moisture content.
g. The delivery ticket for all mixes produced with Warm Mix Technology must indicate the additive name, and the injection rate (water or additive) incorporated at the HMA plant. The delivery ticket for all mixes produced with pre-blended WMA additive must indicate the name of the WMA Technology.
h. Net weight (mass) of mixture loaded into truck (When RAP and/or RAS is used the moisture content shall be excluded from mixture net weight).
i. Gross weight (Either equal to the net weight plus the tare weight or the loaded scale weight).
j. Tare weight of truck – Daily scale weight.
k. Project number, purchase order number, name of Contractor (if Contractor other than Producer).
l. Truck number for specific identification of truck.
m. Individual aggregate, Recycled Materials, and virgin asphalt high/target/low weights. For drum plants and silo loadings, the plant printouts shall be produced at 5 minute intervals maintained by the vendor for a period of 3 years after the completion of the Project.

n. For every mixture designation the running daily total delivered and sequential load number.

The net weight of mixture loaded into the truck must be equal to the cumulative measured weight of its components.

The Contractor must notify the Engineer immediately if, during the production day, there is a malfunction of the weighing or recording system in the automated plant or truck-weighing scales. Manually written tickets containing all required information will be allowed for 1 hour, but for no longer, provided that each load is weighed on State-approved scales. At the Engineer's sole discretion, trucks may be approved to leave the plant if a State inspector is present to monitor weighing. If such a malfunction is not fixed within 48 hours, mixture will not be approved to leave the plant until the system is fixed to the Engineer's satisfaction. No damages will be considered should the State be unable to provide an inspector at the plant.

The State reserves the right to have an inspector present to monitor batching and/or weighing operations

2. Transportation of Mixture: Trucks with loads of bituminous concrete being delivered to State projects must not exceed the statutory or permitted load limits referred to as gross vehicle weight (GVW). The Contractor shall furnish a list of all vehicles and allowable weights transporting mixture.

The State reserves the right to check the gross and tare weight of any delivery truck. A variation of 0.4% or less in the gross or tare weight shown on the delivery ticket and the certified scale weight shall be considered evidence that the weight shown on the delivery ticket is correct. If the gross or tare weight varies from that shown on the delivery ticket by more than 0.4%, the Engineer will recalculate the net weight. The Contractor shall take action to correct the discrepancy to the satisfaction of the Engineer.

If a truck delivers mixture to the Project and the ticket indicates that the truck is overweight, the load will not be rejected but a "Measured Weight Adjustment" will be taken in accordance with Article 4.06.04.

The mixture shall be transported from the mixing plant in trucks that have previously been cleaned of all foreign material and that have no gaps through which mixture might inadvertently escape. The Contractor shall take care in loading trucks uniformly so that segregation is minimized. Loaded trucks shall be tightly covered with waterproof covers acceptable to the Engineer. Mesh covers are prohibited. The front and rear of the cover must be fastened to minimize air infiltration. The Contractor shall assure that all trucks are in conformance with this specification. Trucks found not to be in conformance shall not be allowed to be loaded until re-inspected and found satisfactory to the Engineer.

Truck body coating and cleaning agents must not have a deleterious effect on the transported mixture. The use of solvents or fuel oil, in any concentration, is strictly prohibited for the coating of the inside of truck bodies. When acceptable coating or agents are applied, truck bodies shall be raised immediately prior to loading to remove any excess agent in an environmentally acceptable manner.

3. Paving Equipment: The Contractor shall have the necessary paving and compaction equipment at the Project Site to perform the work. All equipment shall be in good working order and any equipment that is worn, defective or inadequate for performance of the work shall be repaired or replaced by the Contractor to the satisfaction of the Engineer. During the paving operation, the use of solvents or fuel oil, in any concentration, is strictly prohibited as a release agent or cleaner on any paving equipment (i.e., rollers, pavers, transfer devices).

Refueling of equipment is prohibited in any location on the paving Project where fuel might come in contact with bituminous concrete mixtures already placed or to be placed. Solvents for use in cleaning mechanical equipment or hand tools shall be stored clear of areas paved or to be paved. Before any such equipment and tools are cleaned, they shall be moved off the paved or to be paved area; and they shall not be returned for use until after they have been allowed to dry.

Pavers: Each paver shall have a receiving hopper with sufficient capacity to provide for a uniform spreading operation and a distribution system that places the mix uniformly, without segregation. The paver shall be equipped with and use a vibratory screed system with heaters or burners. The screed system shall be capable of producing a finished surface of the required evenness and texture without tearing, shoving, or gouging the mixture. Pavers with extendible screed units as part of the system shall have auger extensions and tunnel extenders as necessary. Automatic screed controls for grade and slope shall be used at all times unless otherwise authorized by the Engineer. The controls shall automatically adjust the screed to compensate for irregularities in the preceding course or existing base. The controls shall maintain the proper transverse slope and be readily adjustable, and shall operate from a fixed or moving reference such as a grade wire or floating beam.

Rollers: All rollers shall be self-propelled and designed for compaction of bituminous concrete. Rollers types shall include steel-wheeled, pneumatic or a combination thereof and may be capable of operating in a static or dynamic mode. Rollers that operate in a dynamic mode shall have drums that use a vibratory or oscillatory system or combination of. The vibratory system achieves compaction through vertical amplitude forces. Rollers with this system shall be equipped with indicators that provide the operator with amplitude, frequency and speed settings/readouts to measure the impacts per foot during the compaction process. The oscillatory system achieves compaction through horizontal shear forces. Rollers with this system shall be equipped with frequency indicators. Rollers can operate in the dynamic mode using the oscillatory system on concrete structures such as bridges and catch basins if at the lowest frequency setting.

Pneumatic tire rollers shall be self-propelled and equipped with wide-tread compaction tires capable of exerting an average contact pressure from 60 to 90 lb./in^2 uniformly over the surface, adjusting ballast and tire inflation pressure as required. The Contractor shall furnish evidence regarding tire size; pressure and loading to confirm that the proper contact pressure is being developed and that the loading and contact pressure is uniform for all wheels.

Lighting: For paving operations, which will be performed during hours of darkness, the paving equipment shall be equipped with lighting fixtures as described below, or with approved lighting fixtures of equivalent light output characteristics. Lighting shall maximize the illumination on each task and minimize glare to passing traffic. The Contractor shall provide generators on rollers and pavers of the type, size, and wattage, to adequately furnish electric power to operate the specified lighting equipment. The lighting options and minimum number of fixtures are listed in Tables 4.06-1 and 4.06-2.

Material Transfer Vehicle (MTV): A MTV shall be used when placing a bituminous concrete surface course as indicated in the contract documents. A surface course is defined as the total thickness of the same bituminous concrete mix that extends up to and includes the final wearing surface whether it is placed in a single or multiple lifts, and regardless of any time delays between lifts.

The MTV must be a self-propelled vehicle specifically designed for the purpose of delivering the bituminous concrete mixture from the delivery truck to the paver. The

TABLE 4.06-1: Paver Lighting

Option	Fixture Configuration	Fixture Quantity	Requirement
1	Type A	3	Mount over screed area
	Type B (narrow) or Type C (spot)	2	Aim to auger and guideline
	Type B (wide) or Type C (flood)	2	Aim 25 feet behind paving machine
2	Type D Balloon	2	Mount over screed area

Type A: Fluorescent fixture shall be heavy-duty industrial type. Each fixture shall have a minimum output of 8,000 lumens. The fixtures shall be mounted horizontally, and be designed for continuous row installation.
Type B: Each floodlight fixture shall have a minimum output of 18,000 lumens.
Type C: Each fixture shall have a minimum output of 19,000 lumens.
Type D: Balloon light: Each balloon light fixture shall have a minimum output of 50,000 lumens, and emit light equally in all directions.

TABLE 4.06-2: Roller Lighting

Option	Fixture Configuration*	Fixture Quantity	Requirement
1	Type B (wide)	2	Aim 50 feet in front of and behind roller
	Type B (narrow)	2	Aim 100 feet in front of and behind roller
2	Type C (flood)	2	Aim 50 feet in front of and behind roller
	Type C (spot)	2	Aim 100 feet in front of and behind roller
3	Type D Balloon	1	Mount above the roller

*All fixtures shall be mounted above the roller.
Type B: Each floodlight fixture shall have a minimum output of 18,000 lumens.
Type C: Each fixture shall have a minimum output of 19,000 lumens.
Type D: Balloon light: Each balloon light fixture shall have a minimum output of 50,000 lumens, and emit light equally in all directions.

MTV must continuously remix the bituminous concrete mixture throughout the placement process.

The use of a MTV will be subject to the requirements stated in Article 1.07.05- Load Restrictions. The Engineer may limit the use of the vehicle if it is determined that the use of the MTV may damage highway components, utilities, or bridges. The Contractor shall submit to the Engineer at time of pre-construction the following information:

1. The make and model of the MTV to be used.
2. The individual axle weights and axle spacing for each separate piece of paving equipment (haul vehicle, MTV and paver).
3. A working drawing showing the axle spacing in combination with all 3 pieces of equipment that will comprise the paving echelon.

4. Test Section: The Engineer may require the Contractor to place a test section whenever the requirements of this Section or Section M.04 are not met.

The Contractor shall submit the quantity of mixture to be placed and the location of the test section for review and acceptance by the Engineer. The equipment used in the construction of a passing test section shall be used throughout production.

If a test section fails to meet specifications, the Contractor shall stop production, make

necessary adjustments to the job mix formula, plant operations, or procedures for placement and compaction. The Contractor shall construct test sections, as allowed by the Engineer, until all the required specifications are met. All test sections shall also be subject to removal as set forth in Article 1.06.04.

5. Transitions for Roadway Surface: Transitions shall be formed at any point on the roadway where the pavement surface deviates, vertically, from the uniform longitudinal profile as specified on the plans. Whether formed by milling or by bituminous concrete mixture, all transition lengths shall conform to the criteria below unless otherwise specified.

Permanent Transitions: A permanent transition is defined as any transition that remains as a permanent part of the work. All permanent transitions, leading and trailing ends shall meet the following length requirements:

Posted Speed Limit or Structure	Permanent Transition Length Required
> 35 mph	30 feet per inch of vertical change (thickness)
35 mph or less	15 feet per inch of vertical change (thickness)
Bridge overpass	75 feet before / after end expansion joint
Bridge underpass	75 feet before / after parapet face

In areas where it is impractical to use the above described permanent transition lengths the use of a shorter permanent transition length may be permitted when approved by the Engineer.

Temporary Transitions: A temporary transition is defined as a transition that does not remain a permanent part of the work.

All temporary transitions shall meet the following length requirements:

Posted Speed Limit	Temporary Transition Length Required
> 50 mph	Leading Transition: 15 feet per inch of vertical change (thickness) Trailing Transition: 6 feet per inch of vertical change (thickness)
40, 45 or 50 mph	Leading and Trailing: 4 feet per inch of vertical change (thickness)
35 mph or less	Leading and training: 3 feet per inch of vertical change (thickness)

Note: Any temporary transition to be in place over the winter shutdown period or during extended periods of inactivity (more than 14 calendar days) shall conform to the greater than 50 MPH requirements shown above.

6. Spreading and Finishing of Mixture: Prior to the placement of the bituminous concrete, the underlying base course shall be brought to the plan grade and cross section within the allowable tolerance. Immediately before placing the mixture, the area to be surfaced shall be cleaned by sweeping or by other means acceptable to the Engineer. The bituminous concrete mixture shall not be placed whenever the surface is wet or frozen. The Engineer will verify the mix temperature by means of a probe or infrared type of thermometer. A probe type thermometer, verified by the Department on

an annual basis, must be used in order to reject a load of mixture based on temperatures outside the range stated in the placement QCP.

Placement: The bituminous concrete mixture shall be placed and compacted to provide a smooth, dense surface with a uniform texture and no segregation at the specified thickness and dimensions indicated in the plans and specifications.

When unforeseen weather conditions prevent further placement of the mix, the Engineer is not obligated to accept or place the bituminous concrete mixture that is in transit from the plant.

In advance of paving, traffic control requirements shall be set up daily, maintained throughout placement, and shall not be removed until all associated work including density testing is completed.

The Contractor shall inspect the newly placed pavement for defects in the mixture or placement before rolling is started. Any deviation from standard crown or section shall be immediately remedied by placing additional mixture or removing surplus mixture. Such defects shall be corrected to the satisfaction of the Engineer.

Where it is impractical due to physical limitations to operate the paving equipment, the Engineer may permit the use of other methods or equipment. Where hand spreading is permitted, the mixture shall be placed by means of suitable shovels and other tools, and in a uniformly loose layer at a thickness that will result in a completed pavement meeting the designed grade and elevation.

Placement Tolerances: Each lift of bituminous concrete placed at a uniform specified thickness shall meet the following requirements for thickness and area. Any pavement exceeding these limits shall be subject to an adjustment or removal. Lift tolerances will not relieve the Contractor from meeting the final designed grade. Lifts of specified non-uniform thickness, i.e. wedge or shim course, shall not be subject to thickness and area adjustments.

a) Thickness: Where the total thickness of the lift of mixture exceeds that shown on the plans beyond the tolerances shown in Table 4.06-3, the longitudinal limits of such variation including locations and intervals of the measurements will be documented by the Engineer for use in calculating an adjustment in accordance with Article 4.06.04.

TABLE 4.06-3: Thickness Tolerances

Mixture Designation	Lift Tolerance
S1	+/- 3/8 inch
S0.25, S0.375, S0.5	+/- 1/4 inch

Where the thickness of the lift of mixture is less than that shown on the plans beyond the tolerances shown in Table 4.06-3, the Contractor, with the approval of the Engineer, shall take corrective action in accordance with this Section.

b) Area: Where the width of the lift exceeds that shown on the plans by more than the specified thickness of each lift, the longitudinal limits of such variation including locations and intervals of the measurements will be documented by the Engineer for use in calculating the adjustment in Article 4.06.04.

c) Delivered Weight of Mixture: When the delivery ticket shows that the truck exceeds the allowable gross weight for the vehicle type the quantity of tons representing the overweight amount will be documented by the Engineer for use in calculating an adjustment in accordance with Article 4.06.04.

Transverse Joints: All transverse joints shall be formed by saw-cutting a sufficient distance back from the previous run, existing bituminous concrete pavement or bituminous concrete driveways to expose the full thickness of the lift. A brush of tack coat shall be used on any cold joint immediately prior to additional bituminous concrete mixture being placed.

Tack Coat Application: Immediately before application, the area to be tacked shall be cleaned by sweeping or by other means acceptable to the Engineer. A thin uniform coating of tack coat shall be applied to the pavement immediately before overlaying and be allowed sufficient time to break (set) prior to any paving equipment or haul vehicles driving on it. All surfaces in contact with the bituminous concrete that have been in place longer than 3 calendar days shall have an application of tack coat. The tack coat shall be applied by a non-gravity pressurized spray system that results in uniform overlapping coverage at an application rate of 0.03 to 0.05 gal/s.y. for a non-milled surface and an application rate of 0.05 to 0.07 gal/s.y. for a milled surface. For areas where both milled and un-milled surfaces occur, the tack coat shall be an application rate of 0.03 to 0.05 gal/s.y. The Engineer must approve the equipment and the method of measurement prior to use. The material for tack coat shall not be heated in excess of 160°F and shall not be further diluted.

Compaction: The Contractor shall compact the mixture to meet the density requirements as stated in Article 4.06.03 and eliminate all roller marks without displacement, shoving, cracking, or aggregate breakage.

When placing a lift with a specified thickness less than 1 1/2 in, or a wedge course, the Contractor shall provide a minimum rolling pattern as determined by the development of a compaction curve. The procedure to be used shall be documented in the Contractor's QCP for placement and demonstrated on the first day of placement.

The use of the vibratory system on concrete structures is prohibited. When approved by the Engineer, the Contractor may operate a roller using an oscillatory system at the lowest frequency setting.

If the Engineer determines that the use of compaction equipment in the dynamic mode may damage highway components, utilities, or adjacent property, the Contractor shall provide alternate compaction equipment. The Engineer may allow the Contractor to operate rollers in the dynamic mode using the oscillatory system at the lowest frequency setting.

Rollers operating in the dynamic mode shall be shut off when changing directions.

These allowances will not relieve the Contractor from meeting pavement compaction requirements.

Surface Requirements: The pavement surface of any lift shall meet the following requirements for smoothness and uniformity. Any irregularity of the surface exceeding these requirements shall be corrected by the Contractor.

a) Smoothness: Each lift of the surface course shall not vary more than 1/4 in from a Contractor-supplied 10 ft straightedge. For all other lifts of bituminous concrete, the tolerance shall be 3/8 in. Such tolerance will apply to all paved areas.
b) Uniformity: The paved surface of the mat and joints shall not exhibit segregation, rutting, cracking, disintegration, flushing or vary in composition as determined by the Engineer.

7. Longitudinal Joint Construction Methods: The Contractor shall use Method I-Notched Wedge Joint (see Figure 4.06-1) when constructing longitudinal joints where lift thicknesses are between 1 1/2 and 3 in, except for S1mixes. Method II Butt Joint (see Figure 4.06-2) shall be used for lifts less than 1 1/2 in or greater than 3 in, and S1

mixes. During placement of multiple lifts of bituminous concrete, the longitudinal joint shall be constructed in such a manner that it is located at least 6 in from the joint in the lift immediately below. The joint in the final lift shall be at the centerline or at lane lines. Each longitudinal joint shall maintain a consistent offset from the centerline of the roadway along its entire length. The difference in elevation between the two faces of any completed longitudinal joint shall not exceed 1/4 in at any location.

Method I - Notched Wedge Joint:

A notched wedge joint shall be constructed as shown in Figure 4.06-1 using a device that is attached to the paver screed and is capable of independently adjusting the top and bottom vertical notches. The device shall have an integrated vibratory system.

The taper portion of the wedge joint must be placed over the longitudinal joint in the lift immediately below. The top vertical notch must be located at the centerline or lane line in the final lift. The requirement for paving full width “curb to curb” as described in Method II may be waived if addressed in the QC plan and approved by the Engineer.

The taper portion of the wedge joint shall be evenly compacted using equipment other than the paver or notch wedge joint device.

The taper portion of the wedge joint shall not be exposed to traffic for more than 5 calendar days.

The pavement surface under the wedge joint must have an application of tack coat material. Prior to placing the completing pass (hot side), an application of tack coat must be applied to the exposed surface of the tapered section; regardless of time elapsed between paver passes. The in-place time allowance described in Subarticle 4.06.03-7 does not apply to joint construction.

FIGURE 4.06-1: Notched Wedge Joint (Not to Scale)

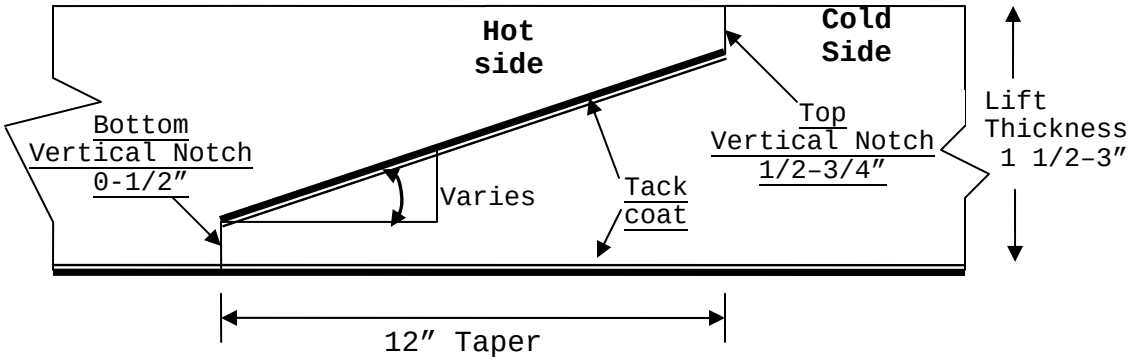

Any exposed wedge joint must be located to allow for the free draining of water from the road surface.

The Engineer reserves the right to define the paving limits when using a wedge joint that will be exposed to traffic.

If Method I, Notched Wedge Joint cannot be used on lifts between 1.5 and 3 inches, Method III Butt Joint may be substituted according to the requirements below for “Method III – Butt Joint with Hot Pour Rubberized Asphalt Treatment.”

Method II - Butt Joint:

When adjoining passes are placed, the Contractor shall utilize equipment that creates a near vertical edge (refer to Figure 4.06-2).

The completing pass (hot side) shall have sufficient mixture so that the compacted thickness is not less than the previous pass (cold side). The end gate on the paver should be set so there is an overlap onto the cold side of the joint.

FIGURE 4.06-2: Butt Joint (Not to Scale)

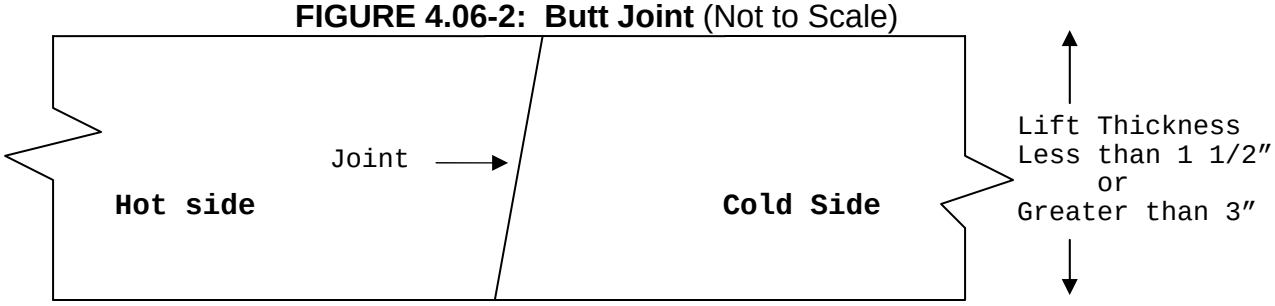

The Contractor shall not allow any butt joint to be incomplete at the end of a work shift unless otherwise allowed by the Engineer. When using this method, the Contractor is not allowed to leave a vertical edge exposed at the end of a work shift and must complete paving of the roadway full width "curb to curb."

<u>Method III- Butt Joint with Hot Poured Rubberized Asphalt Treatment</u>:

If Method I Notched Wedge Joint cannot be used due to physical constraints in certain limited locations; the Contractor may submit a request in writing for approval by the Engineer, to utilize Method III Butt Joint with Hot Poured Rubberized Asphalt Treatment as a substitution in those locations. There shall be no additional measurement or payment made when the Method III joint is substituted for the Method I wedge joint. When required by the Contract or approved by the Engineer, Method III (see Figure 4.06-3) shall be used.

FIGURE 4.06-3: Butt Joint with Hot Poured Rubberized Asphalt Treatment
(Not to Scale)

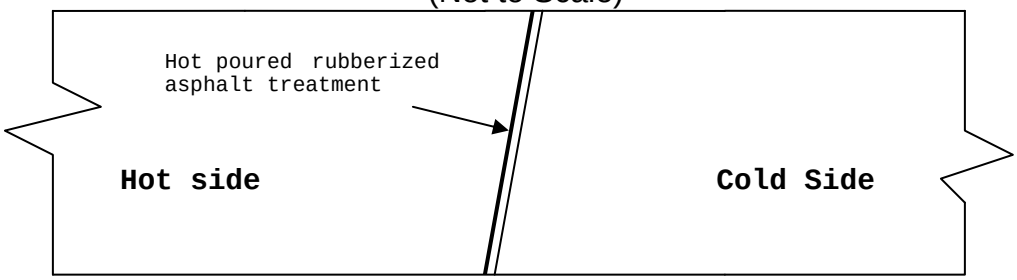

All of the requirements of Method II must be met with Method III. In addition, the longitudinal vertical edge must be treated with a rubberized joint seal material meeting the requirements of ASTM D 6690, Type 2. The joint sealant shall be placed on the face of the "cold side" of the butt joint as shown above prior to placing the "hot side" of the butt joint. The joint seal material shall be applied in accordance with the manufacturer's recommendation so as to provide a uniform coverage and avoid excess bleeding onto the newly placed pavement.

8. Contractor Quality Control (QC) Requirements: The Contractor shall be responsible for maintaining adequate quality control procedures throughout the production and placement operations. Therefore, the Contractor must ensure that the materials, mixture and work provided by subcontractors, suppliers and producers also meets Contract specification requirements.

This effort must be documented in a Quality Control Plan (QCP) which shall also address the actions, inspection, or sampling and testing necessary to keep the production and placement operations in control, to determine when an operation has gone out of control and to respond to correct the situation in a timely fashion.

The Standard QCP for production shall consist of the quality control program specific to the production facility.

There are 3 components to the QCP for placement: a Standard QCP, a Project Summary Sheet that details Project-specific information, and if applicable a separate Extended Season Paving Plan as required in Section 9 "Temperature and Seasonal Requirements."

The Standard QCP for both production and placement shall be submitted to the Department for approval each calendar year a minimum of 30 days prior to production or placement. Production or placement shall not occur until all QCP components have been approved by the Engineer.

Each QCP shall include the name and qualifications of a Quality Control Manager (QCM). The QCM shall be responsible for the administration of the QCP, and any modifications that may become necessary. The QCM shall have the ability to direct all Contractor personnel on the Project during paving operations. All Contractor sampling, inspection and test reports shall be reviewed and signed by the QCM prior to submittal to the Engineer. The QCP shall also include the name and qualifications of any outside testing laboratory performing any QC functions on behalf of the Contractor.

Approval of the QCP does not relieve the Contractor of its responsibility to comply with the Project specifications. The Contractor may modify the QCP as work progresses and must document the changes in writing prior to resuming operations. These changes include but are not limited to changes in quality control procedures or personnel. The Department reserves the right to deny significant changes to the QCP.

QCP for Production: Refer to Section M.04.03-1.

QCP for Placement: The Standard QCP, Project Summary Sheet, and Extended Season Paving Plan shall conform to the format provided by the Engineer. The format is available at http://www.ct.gov/dot/lib/dot/documents/dconstruction/pat/qcp_outline_hma_placement.pdf.

The Contractor shall perform all quality control sampling and testing, provide inspection, and exercise management control to ensure that bituminous concrete placement conforms to the requirements as outlined in its QCP during all phases of the work. The Contractor shall document these activities for each day of placement.

The Contractor shall submit complete field density testing and inspection records to the Engineer within 48 hours of the test in a manner acceptable to the Engineer.

The Contractor may obtain 1 mat core and 1 joint core per day for process control, provided this process is detailed in the QCP. The results of these process control cores shall not be used to dispute the Department determinations from the acceptance cores.

The Contractor shall submit the location of each process control core to the Engineer for approval prior to taking the core. The core holes shall be filled to the same requirements described in Sub article 4.06.03-10.

9. Temperature and Seasonal Requirements: Paving, including placement of temporary pavements, shall be divided into two seasons, "In-Season" and "Extended-Season." In-Season paving occurs from May 1 to October 14, and Extended Season paving occurs from October 15 to April 30. The following requirements shall apply unless otherwise authorized or directed by the Engineer:

- Bituminous concrete mixes shall not be placed when the air or subbase temperature is below 40°F regardless of the season.
- Should paving operations be scheduled during the Extended Season, the Contractor must submit an Extended Season Paving Plan for the Project that addresses minimum delivered mix temperature considering WMA, PMA or other additives, maximum paver speed, enhanced rolling patterns and the method to

balance mixture delivery and placement operations. Paving during Extended Season shall not commence until the Engineer has approved the plan.

10. **Density Testing of Bituminous Concrete Using Core Samples:** This procedure describes the frequency and the method the Contractor shall use to obtain pavement cores for acceptance from the Project.

Coring shall be performed on each lift specified to a thickness of 1 1/2 in or more. All material placed in a lift shall be compacted to the degree specified in Tables 4.06-8 and 4.06-9. The density of each core will be determined using the production lot's average maximum theoretical specific gravity (Gmm) established during the testing of the parent material at the plant. When there was no testing of the parent material or any Gmm exceeds the specified tolerances in the Department's current QA Program for Materials, the Engineer will determine the maximum theoretical density value to be used for density calculations. Bituminous concrete HMA S1 mixes are excluded from the longitudinal joint density requirements.

The Contractor shall extract cores (4 or 6 in diameter for S0.25, S0.375 and S0.5 mixes, 6 in diameter for S1.0 mixtures - wet sawed) from sampling locations determined by the Engineer. The Engineer must witness the extraction and labeling of cores, as well as the filling of the core holes. The cores shall be labeled by the Contractor with the Project number, lot number, and sub-lot number on the top surface of the core. When labeling the core lot number, include whether the core is from a mat lot or joint lot by using an "M" for a mat core and "J" for a joint core. For example, a core from the first sub-lot of the first mat lot shall be labeled with "Lot M1 – 1." The first number refers to the lot and the second number refers to the sub-lot. See Figure 4.06-4. The side of the cores shall be labeled with the core lot number and date placed. The Project inspector shall fill out a MAT-109 containing the same information to accompany the cores. The Contractor shall deliver the cores and MAT-109 to the Department's Central Testing Lab in a safe manner to ensure no damage occurs to the cores. The Contractor shall use a container approved by the Engineer. In general the container shall consist of an attached lid container made out of plastic capable of being locked shut and shall be tamper proof. The Contractor shall use foam, bubble wrap, or another suitable material to prevent the cores from being damaged during transportation. Once the cores and MAT-109 are in the container the Engineer will secure the lid using a security seal. The security seal's identification number must be documented on the MAT-109. The Central Lab will break the security seal and take possession of the cores upon receipt.

FIGURE 4.06-4: Labeling of Cores

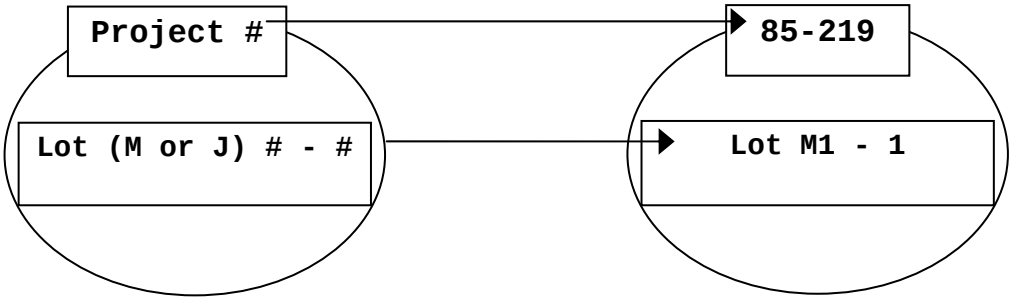

Frequency of sampling is in accordance with the following tables:

TABLE 4.06-4: Testing Requirement for Bridge Density Lot

Length of Each Structure (Feet)	MAT – No. of Cores	JOINT - No. of cores
≤ 500	See Table 4.06-5(A or B)	See Table 4.06-5(A or B)
501 – 1500	3	3
1501 – 2500	4	4
2501 and greater	5	5

All material placed on structures less than or equal to 500 ft long shall be included as part of a standard lot as follows:

TABLE 4.06-5A: Testing requirement for Density Lots ≥ 500 Tons

Lot Type	No. of Mat Cores		No. of Joint Cores		Target Lot Size (Tons)
Lot Without Bridge(1)	4		4		2000
Lot With Bridge(s)(1)(2)	4 plus	1 per structure (≤ 300')	4 plus	1 per structure (≤ 300)	2000
		2 per structure (301' – 500')		2 per structure (301' – 500')	

TABLE 4.06-5B: Testing requirement for Density Lots < 500 Tons

Lot Type	No. of Mat Cores	No. of Joint Cores	Lot Size (Tons)
Lot Without Bridge(1)	3	3	1 per lift
Lot With Bridge(s)(1)(2)	3	3	1 per lift

Notes:

(1) The number of "Required Paver Passes for Full Width" shall be used to determine the sub-lot sizes within the lot. The number of paver passes for full width is determined by the Contractor.

(2) If a non-bridge mat or joint core location randomly falls on a structure, the core is to be obtained on the structure in addition to the core(s) required on the structure.

A density lot will be complete when the full designed paving width of the established lot length has been completed and shall include all longitudinal joints that exist between the curb lines regardless of date(s) paved. Quantity of material placed on structures less than or equal to 500 ft long is inclusive of the standard lot. Prior to paving, the total length of the Project to be paved shall be split up into lots that contain approximately 2000 tons each. Areas such as highway ramps may be combined to create one lot. In general, combined areas should be set up to target a 2000 ton lot size. One (1) adjustment will apply for each lot. The tons shall be determined using the yield calculation in Article 4.06.04. The last lot shall be the difference between the total payable tons for the Project and the sum of the previous lots.

After the compaction process has been completed, the material shall be allowed to

cool sufficiently to allow the cutting and removal of the core without damage. The Contractor shall core to a depth that allows extraction so that the uppermost layer being tested for density will not be affected.

A mat core shall not be taken any closer than 1 ft from the edge of a paver pass. If a random number locates a core less than 1 ft from any edge, locate the core so that the sample is 1 ft from the edge.

Method I, Notched Wedge Joint cores shall be taken so that the center of the core is 5 in from the visible joint on the hot mat side. Refer to Figure 4.06-5.

When Method III Butt Joint with Hot Poured Rubberized Asphalt Treatment is used, cores shall be taken from the hot side so the edge of the core is within 1 in of the longitudinal joint.

All cores must be cut within 5 calendar days of placement. Any core that is damaged or obviously defective while being obtained will be replaced with a new core from a location within 2 ft measured in a longitudinal direction.

Each core hole shall be filled within 4 hours upon core extraction. Prior to being filled, the hole shall be prepared by removing any free water and applying tack coat using a brush or other means to uniformly cover the cut surface. The core hole shall be filled using a bituminous concrete mixture at a minimum temperature of 240°F containing the same or smaller nominal maximum aggregate size and compacted with a hand compactor or other mechanical means to the maximum compaction possible. The bituminous concrete fill shall be compacted to 1/8 in above the finished pavement.

FIGURE 4.06-5: Notched Wedge Joint Cores (Not to Scale)

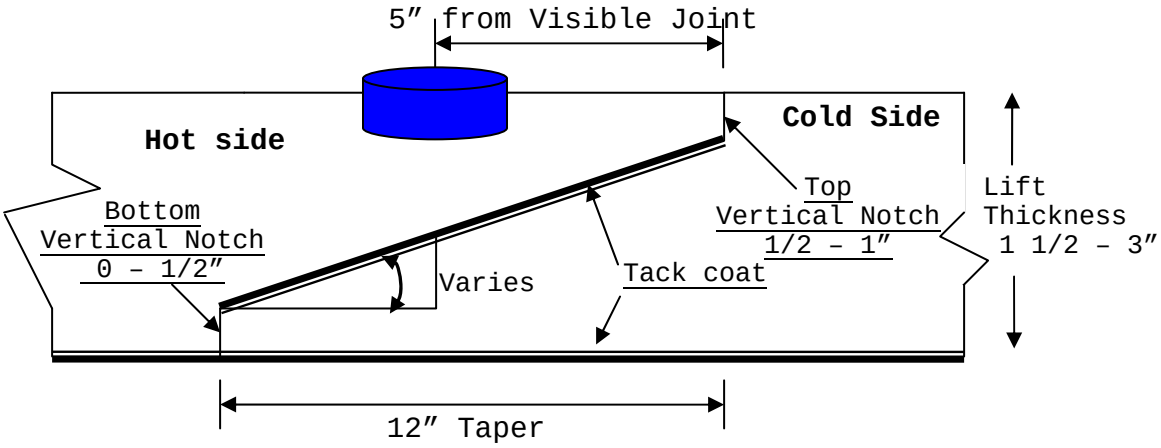

11. Acceptance Inspection, Sampling and Testing: Inspection, sampling, and testing to be used by the Engineer shall be performed at the minimum frequency specified in Section M.04 and stated herein.

Sampling for acceptance shall be established using ASTM D3665, or a statistically based procedure of random sampling approved by the Engineer.

Plant Material Acceptance: The Contractor shall provide the required acceptance sampling, testing and inspection during all phases of the work in accordance with Section M.04. The Department will perform verification testing on the Contractor's acceptance test results. Should binder content, theoretical maximum density (Gmm), or air void test results exceed the specified tolerances in the Department's current QA Program for Materials, Acceptance and Assurance Testing Policies and Procedures, the Department will investigate to determine an assignable cause. Contractor test results for a subject lot or sub lot may be replaced with the Department's results for the

purpose of assessing adjustments. The verification procedure is included in the Department's current QA Program for Materials.

Density Acceptance: The Engineer will perform all acceptance testing on the cores in accordance with AASHTO T331.

12. Density Dispute Resolution Process: The Contractor and Engineer will work in partnership to avoid potential conflicts and to resolve any differences that may arise during quality control or acceptance testing for density. Both parties will review their sampling and testing procedures and results and share their findings. If the Contractor disputes the Engineer's test results, the Contractor must submit a written request to initiate the Dispute Resolution Process within 7 calendar days of the notification of the test results. No request for dispute resolution will be allowed unless the Contractor provides quality control results within the timeframe described in Subarticle 4.06.03-9 supporting its position. No request for Dispute Resolution will be allowed for a Density Lot in which any core was not taken within the required 5 calendar days of placement. Should the dispute not be resolved through evaluation of existing testing data or procedures, the Engineer may authorize the Contractor to obtain a new set of core samples per disputed lot. The core samples must be extracted no later than 14 calendar days from the date of Engineer's authorization.

The number and type (mat, joint, or structure) of the cores taken for dispute resolution must reflect the number and type of the cores taken for acceptance. The location of each core shall be randomly located within the respective original sub lot. All such core samples shall be extracted and filled using the procedure outlined in Article 4.06.03. The results from the dispute resolution cores shall be added to the results from the acceptance cores and averaged for determining the final in-place density value.

13. Corrective Work Procedures: Any portion of the completed pavement that does not meet the requirements of the specification shall be corrected at the expense of the Contractor. Any corrective courses placed as the final wearing surface shall match the specified lift thickness after compaction.

If pavement placed by the Contractor does not meet the specifications, and the Engineer requires its replacement or correction, the Contractor shall:

a) Propose a corrective procedure to the Engineer for review and approval prior to any corrective work commencing. The proposal shall include:
   - Limits of pavement to be replaced or corrected, indicating stationing or other landmarks that are readily distinguishable.
   - Proposed work schedule.
   - Construction method and sequence of operations.
   - Methods of maintenance and protection of traffic.
   - Material sources.
   - Names and telephone numbers of supervising personnel.

b) Perform all corrective work in accordance with the Contract and the approved corrective procedure.

14. Protection of the Work: The Contractor shall protect all sections of the newly finished pavement from damage that may occur as a result of the Contractor's operations for the duration of the Project. Prior to the Engineer's authorization to open the pavement to traffic, the Contractor is responsible to protect the pavement from damage.

15. Cut Bituminous Concrete Pavement: Work under this item shall consist of making a straight-line cut in the bituminous concrete pavement to the lines delineated on the plans or as directed by the Engineer. The cut shall provide a straight, clean, vertical face with no cracking, tearing or breakage along the cut edge.

4.06.04—Method of Measurement:

1. HMA S* or PMA S*: The quantity of bituminous concrete measured for payment will be determined by the documented net weight in tons accepted by the Engineer in accordance with this Section and Section M.04.

2. Adjustments: Adjustments may be applied to bituminous concrete quantities and will be measured for payment using the following formulas:

Yield Factor for Adjustment Calculation = 0.0575 Tons/SY/inch

Actual Area = [(Measured Length (ft)) x (Avg. of width measurements (ft))]÷9 s.f./SY

Actual Thickness (t) = Total tons delivered / [Actual Area (SY) x 0.0575 Tons/SY/inch]

a) Area: If the average width exceeds the allowable tolerance, an adjustment will be made using the following formula. The tolerance for width is equal to the specified thickness (inches) of the lift being placed.

Tons Adjusted for Area (T_A) = [(L x W_{adj})/9] x (t) x 0.0575 Tons/SY/inch = (-) Tons

Where: L = Length (ft)

(t) = Actual thickness (inches)

W_{adj} = (Designed width (ft) + tolerance /12) - Measured Width)

b) Thickness: If the actual thickness is less than the allowable tolerance, the Contractor shall submit a repair procedure to the Engineer for approval. If the actual thickness exceeds the allowable tolerance, an adjustment will be made using the following formula:

Tons Adjusted for Thickness (T_T) = A x t_{adj} x 0.0575 = (-) Tons

Where: A = Area = {[L x (Design width + tolerance (lift thickness)/12)] / 9}

t_{adj} = Adjusted thickness = [(Dt + tolerance) - Actual thickness]

(Note: Design thickness, tolerance and Actual thickness in inches)

c) Weight: If the quantity of bituminous concrete representing the mixture delivered to the Project is in excess of the allowable gross vehicle weight (GVW) for each vehicle, an adjustment will be made using the following formula:

Tons Adjusted for Weight (T_W) = GVW – DGW= (-) Tons

Where: DGW = Delivered gross weight as shown on the delivery ticket or measured on a certified scale.

d) Mixture Adjustment: The quantity of bituminous concrete representing the production lot will be adjusted based on test results and values listed in Tables 4.06-6 and 4.06-7. The Department's Division of Materials Testing will calculate the daily adjustment value for T_{SD}.

The adjustment values in Tables 4.06-6 and 4.06-7 will be calculated for each sub lot based on the Air Void and Liquid Binder Content test results for that sub lot. The total adjustment for each day's production (lot) will be computed using tables and the following formulas:

Tons Adjusted for Superpave Design (T_{SD}) = [($AdjAV_t$ + $AdjPB_t$) / 100] x Tons

Percent Adjustment for Air Voids =

$AdjAV_t$ = [$AdjAV_1$ + $AdjAV_2$ + $AdjAV_i$ + … + $AdjAV_n$)] /n

Where: $AdjAV_t$ = Total percent air void adjustment value for the lot

$AdjAV_i$ = Adjustment value from Table 4.06-7 resulting from each sub lot or the average of the adjustment values resulting from multiple tests within a sub lot, as approved by the Engineer.

n = number of sub lots based on Table M.04.03-1

TABLE 4.06-6: Adjustment Values for Air Voids

Adjustment Value ($AdjAV_i$) (%)	S0.25, S0.375, S0.5, S1 Air Voids (AV)
+2.5	3.8 - 4.2
+3.125(AV-3)	3.0 - 3.7
-3.125(AV-5)	4.3 – 5.0
20 x (AV-3)	2.3 – 2.9
-20 x (AV-5)	5.1 – 5.7
-20.0	less than or equal to 2.2 or greater than or equal to 5.8

Positive air void adjustment values will not be calculated for any test that fails to meet gradation or binder content tolerances of the JMF in Table M.04.03-5.

Percent Adjustment for Liquid Binder =

$AdjPB_t = [(AdjPB_1 + AdjPB_2 + AdjPB_i + \ldots + AdjPB_n)] / n$

Where: $AdjPB_t$= Total percent liquid binder adjustment value for the lot

$AdjPB_i$ = Adjustment value from Table 4.06-7 resulting from each sub lot

n = number of binder tests in a production lot

TABLE 4.06-7: Adjustment Values for Binder Content

Adjustment Value ($AdjAV_i$) (%)	S0.25, S0.375, S0.5, S1 Pb (refer to Table M.04.02-5)
0.0	Equal to or above the min. liquid content
- 10.0	Below the min. liquid content

e) Density Adjustment: The quantity of bituminous concrete measured for payment in a lift of pavement specified to be 1 1/2 in or greater may be adjusted for density. Separate density adjustments will be made for each lot and will not be combined to establish 1 density adjustment. If either the Mat or Joint adjustment value is “remove and replace,” the density lot shall be removed and replaced (curb to curb).

No positive adjustment will be applied to a Density Lot in which any core was not taken within the required 5 calendar days of placement.

Tons Adjusted for Density (T_D) =

$[\{(PA_M \times 0.50) + (PA_J \times 0.50)\} / 100]$ X Density Lot Tons

Where: T_D = Total tons adjusted for density for each lot

PA_M = Mat density percent adjustment from Table 4.06-8

PA_J = Joint density percent adjustment from Table 4.06-9

TABLE 4.06-8: Adjustment Values for Pavement Mat density

Average Core Result Percent Mat Density	Percent Adjustment (Bridge and Non-Bridge) (1)(2)
97.1 - 100	-1.667 x (ACRPD-98.5)
94.5 – 97.0	+2.5
93.5 – 94.4	+2.5 x (ACRPD-93.5)
92.0 – 93.4	0
90.0 – 91.9	-5 x (92-ACRPD)
88.0 – 89.9	-10 x (91-ACRPD)
87.0 – 87.9	-30
86.9 or less	Remove and Replace (curb to curb)

NOTES:
(1) ACRPD = Average Core Result Percent Density
(2) All Percent Adjustments to be rounded to the second decimal place. For example, 1.667 is to be rounded to 1.67.

TABLE 4.06-9: Adjustment Values for Pavement Joint Density

Average Core Result Percent Joint Density	Percent Adjustment (Bridge and Non-Bridge) (1)(2)
97.1 – 100	-1.667*(ACRPD-98.5)
93.5 – 97.0	+2.5
92.0 – 93.4	+1.667*(ACRPD-92)
91.0 – 91.9	0
89.0 – 90.9	-7.5*(91-ACRPD)
88.0 – 88.9	-15*(90-ACRPD)
87.0 – 87.9	-30
86.9 or less	Remove and Replace (curb to curb)

NOTES:
(1) ACRPD = Average Core Result Percent Density
(2) All Percent Adjustments to be rounded to the second decimal place. For example, 1.667 is to be rounded to 1.67.

3. Transitions for Roadway Surface: The installation of permanent transitions will be measured under the appropriate HMA or PMA item used in the formation of the transition.

The quantity of material used for the installation of temporary transitions shall be measured for payment under the appropriate item used in the formation of the transition. The installation and removal of a bond breaker, and the removal and disposal of any temporary transition formed by milling or with bituminous concrete pavement is not measured for payment.

4. Cut Bituminous Concrete Pavement: The quantity of bituminous concrete pavement cut will be measured in accordance with Article 2.02.04.

5. Material for Tack Coat: The quantity of tack coat will be measured for payment by the number of gallons furnished and applied on the Project and approved by the

Engineer. No tack coat material shall be included that is placed in excess of the tolerance described in Article 4.06.03-6.

a. Container Method - Material furnished in a container will be measured to the nearest 1/2 gallon. The volume will be determined by either measuring the volume in the original container by a method approved by the Engineer or using a separate graduated container capable of measuring the volume to the nearest 1/2 gallon. The container in which the material is furnished must include the description of material, including lot number or batch number and manufacturer or product source.
b. Truck Method - The Engineer will establish a weight per gallon of the tack coat based on the density at 60ºF for the material furnished. The number of gallons furnished will be determined by weighing the material on scales furnished by and at the expense of the Contractor, or from the automated metering system on the delivery vehicle.

6. Material Transfer Vehicle (MTV): The furnishing and use of a MTV will be measured separately for payment based on the actual number of surface course tons delivered to a paver using the MTV.

4.06.05—Basis of Payment:

1. HMA S* or PMA S*: The furnishing and placing of bituminous concrete will be paid for at the Contract unit price per ton for "HMA S*" or "PMA S*."

All costs associated with providing illumination of the work area are included in the general cost of the work.

All costs associated with cleaning the surface to be paved, including mechanical sweeping, are included in the general cost of the work. All costs associated with constructing longitudinal joints are included in the general cost of the work.

All costs associated with obtaining cores for acceptance testing and dispute resolution are included in the general cost of the work.

2. Bituminous Concrete Adjustment Costs: This adjustment will be calculated using the formulas shown below if all of the measured adjustments in Article 4.06.04 are not equal to zero. A positive or negative adjustment will be applied to monies due the Contractor.

Production Lot: $[T_T + T_A + T_W + T_{SD})]$ x Unit Price = Est. (P)
Density Lot: T_D X Unit Price = Est. (D)

Where: Unit Price = Contract unit price per ton per type of mixture
T_T = Total tons of each adjustment calculated in Article 4.06.04
T_A = Total tons adjusted for area
T_W = Total tons adjusted for weight
T_{SD} = Total tons adjusted for Superpave design
T_D = Total tons adjusted for density
Est. ( )= Pay Unit in dollars representing incentive or disincentive

The Bituminous Concrete Adjustment Cost item, if included in the bid proposal or estimate, is not to be altered in any manner by the Bidder. If the Bidder should alter the amount shown, the altered figure will be disregarded and the original estimated cost will be used for the Contract.

3. Transitions for Roadway Surface: The installation of permanent transitions will be paid under the appropriate HMA or PMA item used in the formation of the transition. The quantity of material used for the installation of temporary transitions will be paid

under the appropriate pay item used in the formation of the transition. The installation and removal of a bond breaker, and the removal and disposal of any temporary transition formed by milling or with bituminous concrete pavement is included in the general cost of the work.

4. The cutting of bituminous concrete pavement will be paid in accordance with Article 2.02.05 for “Cut Bituminous Concrete Pavement.”

5. Material for tack coat will be paid for at the Contract unit price per gallon for "Material for Tack Coat."

6. The Material Transfer Vehicle (MTV) will be paid at the Contract unit price per ton for a "Material Transfer Vehicle.”

Pay Item	Pay Unit
HMA S*	ton
PMA S*	ton
Bituminous Concrete Adjustment Cost	est.
Material for Tack Coat	gal.
Material Transfer Vehicle	ton

CONNECTICUT
SUPPLEMENTAL SPECIFICATION
SECTION 4.14
BITUMINOUS SURFACE TREATMENT

Delete the entire section.

CONNECTICUT
SUPPLEMENTAL SPECIFICATION
SECTION 5.04
RAILROAD PROTECTION

Replace the entire Section with the following:

SECTION 5.04
RAILROAD PROTECTION

5.04.01—Description: This item shall consist of securing protective services of workers such as flagmen, electric traction linemen, inspectors, track foremen, signalmen, or other such protective services deemed necessary by a railroad engaged in or affected by the Project operations of the Contractor on, over, under or adjacent to the railroad's right-of-way. This item shall also include any material or equipment incidental to or required for the provision of such required protective services. The Contractor shall secure such services as are required by the railroad, and if said services are obtained from the railroad, the Contractor shall reimburse the railroad for them, in accordance with relevant Contract terms or with the railroad's customary terms for such transactions. The Contractor must understand that the railroad may require advance payment of all or a portion of the estimated costs for the services, in which case the Contractor shall make such advance payment.

5.04.02—Vacant

5.04.03—Vacant

5.04.04—Method of Measurement: Only Project-related protective services billed by the railroad and approved by the Engineer will be measured for payment. Protective services which the Engineer did not approve or deem necessary for the proper completion of the Project, will not be measured for payment.

5.04.05—Basis of Payment: The sum of money for this item shown in the bid Estimate and in the itemized bid proposal as “Estimated Cost” for this work will be considered and treated as the bid price for it, even though payment for it will be made as described below. The estimated cost figure is not to be altered in any manner by the bidder. Should the bidder alter the amount shown, the altered figures will be disregarded and the original bid price will be used as the total amount for the Contract item. The Department will pay the Contractor for “Railroad Protection ” at the actual hourly rate charged to the Contractor for railroad protection services approved by the Engineer (as shown in the monthly statement or receipted bills to the Contractor from the entity that provided the actual services), plus a five percent (5%) markup. This price shall include all labor, material and equipment provided by a railroad for protective services required for Project operations.

Protective services used solely for the convenience or benefit of the Contractor shall be the legal and financial responsibility of the Contractor and will not be included in this item.

Final acceptance of the Project and resolution of financial Project obligations by the Department will be contingent upon the Contractor's providing the Department with proof that each railroad involved in the Project has been reimbursed for all necessary

protective services provided by the railroad or that the Contractor has made some other arrangements satisfactory to said railroad(s) for such reimbursement.

Pay Item	Pay Unit
Railroad Protection	est.

CONNECTICUT
SUPPLEMENTAL SPECIFICATION
SECTION 5.08
SHEAR CONNECTORS

5.08.02—Materials:

Replace the only paragraph with the following:

“ Stud shear connectors shall meet the requirements of Subarticle M.06.02-4 Welded Stud Shear Connectors.”

5.08.03—Construction Methods:

Replace the last sentence of the third paragraph with the following:

“ Stud shear connectors may be stacked to meet heights greater than the 8 in (200 mm) maximum for individual studs.”

Replace the last sentence of the fifth paragraph with the following:

“ Studs exhibiting no signs of failure after bending shall be left in the bent position, if allowed by the Engineer.”

5.08.04—Method of Measurement:

Delete the entire article and replace with the following:

“ Installed and accepted shear connectors will be measured as units.
For stacked studs, the Department will measure for payment any stack higher than 8 in (200 mm) as two (2) studs.”

5.08.05—Basis of Payment:

Delete the entire article and replace with the following:

“ This work will be paid for at the Contract unit price each for “Shear Connectors,” which price shall include all materials, tools, equipment and labor incidental thereto for all work under this item on the Project.

Pay Item	Pay Unit
Shear Connectors	ea. (ea.)”

CONNECTICUT
SUPPLEMENTAL SPECIFICATION
SECTION 5.14
PRESTRESSED CONCRETE MEMBERS

Article 5.14.03—Construction Methods:

2. Prestressing:

Change the outline level of "**Final Stressing of Straight Strands:**" *and* "**Final Stressing of Draped Strands:**" *and their subsections as follows:*

" **A. Final Stressing of Straight Strands:**
(1) Single-strand tensioning:
(2) Multiple-strand tensioning:
B. Final Stressing of Draped Strands:
(1) Partial stressing and subsequent strains:
(2) Final stressing in draped position:"

5. Finishing: Deck Units:

Change the first sentence as follows:

"Deck units in structures that will have a bituminous concrete wearing surface shall be given a float finish on the top surface as specified in Subarticle 6.01.03-10."

9. Joining Deck Units:

Change the end of the last sentence of the first paragraph as follows:

"... shall be filled with non-shrink grout conforming to the requirements of Article M.03.05."

12. Inspection:

Change the beginning of the first sentence as follows:

"The provisions of Subarticle 6.03.03-3 (Shop Fabrication), (a) Notification shall apply to the steel items, ..."

16: Methods and Equipment:

Change the last sentence as follows:

"The results of this investigation, including computations, shall be submitted to the Engineer."

CONNECTICUT
SUPPLEMENTAL SPECIFICATION
SECTION 6.01
CONCRETE FOR STRUCTURES

Delete the entire Section and replace it with the following:

SECTION 6.01
CONCRETE FOR STRUCTURES

6.01.01—Description
6.01.02—Materials
6.01.03—Construction Methods
6.01.04—Method of Measurement
6.01.05—Basis of Payment

6.01.01—Description: This item shall include concrete for use in bridges and culverts, walls, catch basins, drop inlets and other incidental construction as required. The concrete shall be composed of Portland cement, pozzolans, fine and coarse aggregate, admixtures and water, prepared and constructed in accordance with these specifications, at the locations and of the form dimensions and class shown on the plans, or as directed by the Engineer.

The use of concrete from dry batch or central mixed plants is permitted for all concrete mixtures.

6.01.02—Materials: The materials for this work shall meet the requirements of M.03.

6.01.03—Construction Methods:

1. Falsework and Forms: Falsework is considered to be any temporary structure which supports structural elements of concrete, steel, masonry or other material during the construction or erection. Forms are considered to be the enclosures or panels which contain the fluid concrete and withstand the forces due to its placement and consolidation. Forms may in turn be supported on falsework.

This work shall consist of the construction and removal of falsework and forms that are designed by the Contractor in the execution of the work, and whose failure to perform properly could adversely affect the character of the Contract work or endanger the safety of adjacent facilities, property, or the public. Falsework and forms shall be mortar tight and of sufficient rigidity and strength to safely support all loads imposed and to produce in the finished structure the lines and grades indicated in the Contract documents. Forms shall also impart the required surface texture and rustication and shall not detract from the uniformity of color of the formed surfaces. Forms shall be of wood, steel or other material approved by the Engineer.

(a) Design: The design of falsework and formwork shall conform to the *AASHTO Guide Design Specifications for Bridge Temporary Works,* or to other established and generally accepted design codes such as ACI Standard *ACI 347 Recommended Practice for Concrete Formwork* or specific form or falsework manufacturer specifications. When other than new or undamaged materials are used, appropriate reductions in allowable stresses, and decreases in resistance factors or imposed loads shall be used for design.

(b) Loads: The design of the falsework and forms shall be based on load factors specified in the *AASHTO LRFD Bridge Design Specifications* and all applicable load combinations shall be investigated. The design load for falsework shall consist of the sum of appropriate dead and live vertical loads and any horizontal loads.

As a minimum, dead loads shall include the weight (mass) of the falsework and all construction material to be supported. The combined unit weight (density) of concrete, reinforcing and pre-stressing steel and forms that is supported shall be assumed to be not less than:

1. Normal-weight (normal-density) concrete: 0.16 kip/ft3 (2560 kg/m3)
2. Lightweight (low-density) concrete: 0.13 kip/ft3 (2080 kg/m3)

Live loads shall consist of the actual weight (mass) of any equipment to be supported, applied as concentrated loads at the points of contact and a uniform load of not less than 0.02 kip/ft^2 (0.001 MPa) applied over the area supported, plus 0.075 kip/ft (1.10 N/mm) applied at the outside edge of deck overhangs.

The horizontal load used for the design of the falsework bracing system shall be the sum of the horizontal loads due to equipment; construction sequence including unbalanced hydrostatic forces from fluid concrete and traffic control devices; stream flow, when applicable; and an allowance for wind. However, in no case shall the horizontal load to be resisted in any direction be less than two percent (2%) of the total dead load.

For post-tensioned structures, the falsework shall also be designed to support any increase in or redistribution of loads caused by tensioning of the structure. Loads imposed by falsework onto existing, new, or partially completed structures shall not exceed those permitted in 6.01.03-12, “Application of Loads.”

(c) Working Drawings: The working drawings for falsework and formwork shall be prepared in accordance with Article 1.05.02 whenever the falsework or formwork exceeds 14.0 ft (4300 mm) in height or whenever vehicular, marine, or pedestrian traffic may travel under or adjacent to the falsework or formwork. Working drawings shall include the sequence, method and rate of placement of the concrete.

Manufacturer catalog cuts or written installation procedures shall be provided for any clips, braces, hangers or other manufactured parts used with the formwork or falsework.

(d) Construction: Forms and falsework shall be built true to lines and grades, shall be strong, stable, firm, mortar-tight and adequately braced or tied, or both. They shall be designed and constructed to withstand all loads and pressures including those imposed by plastic concrete, taking full account of the stresses due to the rate of placement, effect of vibration and conditions brought about by construction methods. Forms and falsework shall be constructed to compensate for variations in camber of supporting members and allow for deflections.

Falsework and formwork shall be chamfered at all sharp corners, unless otherwise ordered or permitted, and shall be given a slight bevel or draft in the case of projections to ensure satisfactory removal. Materials for falsework and formwork and their supports, ties and bracing, shall be of the type, quality and strength to achieve the structural requirements. Form material in contact with concrete shall provide the finished concrete surface smoothness as specified in 6.01.03-10, “Finishing Concrete Surfaces,” and have a uniform appearance.

Falsework and formwork shall be treated with form oil or other release agent approved by the Engineer before the reinforcing steel is placed, or self-releasing

forms approved by the Engineer may be used. Release agents which will adhere to or discolor the concrete shall not be used.

Falsework and formwork for concrete surfaces exposed to view shall produce a smooth surface of uniform texture, free of voids, indentations, protrusions and bulges. Panels lining falsework and formwork shall be arranged so that the joint lines form a symmetrical pattern conforming to the general lines of the structure. The same type of form-lining material shall be used throughout each element of a structure. Falsework and formwork shall be sufficiently rigid so that the undulation of the concrete surface shall not exceed 1/4 in (6 mm) when checked with a 4 ft (1200 mm) straightedge or template.

For non-exposed surfaces the falsework and formwork shall be sufficiently rigid so that the undulation of the concrete surface shall not exceed 1/2 in (13 mm) when checked with a 4 ft (1200 mm) straightedge or template.

Metal ties and anchors to hold the falsework and formwork in alignment and location shall be so constructed that the metal work can be removed to a depth of at least 2 inches (50 mm) from the concrete surface without damage to the concrete. All cavities resulting from the removal of metal ties shall be filled after removal of forms with cement mortar of the same proportions used in the body of the work or other materials approved by the Engineer, and the surface finished smooth and even, and if exposed in the finished work, shall conform to the texture and color of adjacent surfaces. With permission of the Engineer, the Contractor need not remove from the underneath side of bridge decks portions of metal devices used to support reinforcing steel providing such devices are of material, or are adequately coated with material, that will not rust or corrode. When coated reinforcing steel is required, all metal ties, anchorages, or spreaders that remain in the concrete shall be of corrosion-resistant material or coated with a dielectric material.

Forms shall be clean and clear of all debris. For narrow walls and columns where the bottom of the form is inaccessible, an access opening will be allowed in the form and falsework for cleaning out extraneous material.

(e) Date of Completion: The year in which the superstructure is completed in its entirety shall be cast in at least two (2) places as shown on the plans unless otherwise ordered by the Engineer. The date shall be placed in diagonally opposite ends of the bridge parapets or as designated by the Engineer. The reverse molds for the date shall be furnished by the Contractor.

(f) Bridge Decks: After erection of beams and prior to placing falsework and forms, the Contractor shall take elevations along the top of the beam at the points shown on the plans or as directed by the Engineer. The Contractor shall calculate the haunch depths and provide them to the Engineer a minimum of seven (7) days prior to installing the falsework and forms. The Contractor shall also provide calculations for the setting of the overhang brackets based on the final beam deflection. These calculations shall be based on the final proposed deck grade and parapet elevations.

Falsework or formwork for deck forms on girder bridges shall be supported directly on the girders so that there will be no appreciable differential settlement during placing of the concrete. Girders shall be either braced and tied to resist any forces that would cause rotation or torsion in the girders caused by the placing of concrete for diaphragms or decks, or shown to be adequate for those effects. Unless specifically permitted, welding of falsework support brackets or braces to structural steel members or reinforcing steel shall not be allowed.

(g) Stay-In-Place Metal Forms for Bridge Decks: These forms may be used if shown in the Contract or approved by the Engineer. Prior to the use of such forms and

before fabricating any material, the Contractor shall submit working drawings to the Engineer for review in accordance with Article 1.05.02, Working Drawings. These drawings shall include the proposed method of form construction, erection plans including placement plans, attachment details, weld procedure(s), material lists, material designation, gage of all materials, and the details of corrugation. Also, copies of the form design computations shall be submitted with the working drawings. Any changes necessary to accommodate stay-in-place forms, if approved, shall be at no cost to the Department.

The metal forms shall be designed on the basis of the dead load of the form, reinforcement and the plastic concrete, including the additional weight (mass) of concrete [considered to be equivalent to the weight (mass) imposed by an additional concrete thickness equal to 3% of the proposed deck thickness, but not to exceed 0.3 in (8 mm)] due to the deflection of the metal forms, plus 50 psf (2.40 kPa) for construction loads. The allowable stress in the corrugated form and the accessories shall not be greater than 0.725 times the yield strength of the furnished material and the allowable stress shall not exceed 36,000 psi (250 MPa). The span for design and deflection shall be the clear distance between edges of the beams or girders less 2 in (50 mm) and shall be measured parallel to the form flutes. The maximum deflection under the weight (mass) of plastic concrete, reinforcement, and forms shall not exceed 1/180 of the form span or 0.5 in (13 mm), whichever is less. In no case shall the loading used to estimate this deflection be less than 120 psf (586 kg/sq.m). The permissible form camber shall be based on the actual dead load condition. Camber shall not be used to compensate for deflection in excess of the foregoing limits. The form support angles shall be designed as a cantilever with horizontal leg not more than 3 in (75 mm).

No stay-in-place metal forms shall be placed over or be directly supported by the top flanges of beams or girders. The form supporting steel angles may be supported by or attached to the top flanges.

Stay-in-place metal forms shall not be used in bays where longitudinal slab construction joints are located, under cantilevered slabs such as the overhang outside of fascia members, and bridges over a salt-laden body of water with a clearance of less than 15 ft (4.5 m) above mean high water level.

Welding to the top flanges of steel beams and girders is not permitted in the areas where the top flanges are in tension, or as indicated on the plans. Alternate installation procedures shall be submitted addressing this condition.

Drilling of holes in pre-stressed concrete beams or the use of power-actuated tools on the pre-stressed concrete beams for fastening of the form supports to the pre-stressed concrete beams will not be permitted. Welding of the reinforcing steel to the pre-stressed units is not permitted.

All edges of openings cut for drains, pipes, and similar appurtenances shall be independently supported around the entire periphery of the opening.

All fabricated stay-in-place metal forms shall be unloaded, stored at the Project site at least 4 in (100 mm) above the ground on platforms, skids or other suitable supports and shall be protected against corrosion and damage and handled in such a manner as to preclude damage to the forms. Damaged material shall be replaced at no additional cost to the State.

Any exposed form or form support metal where the galvanized coating has been damaged, shall be thoroughly cleaned, wire brushed, then coated with 2 coats of Zinc Dust – Zinc Oxide primer, FS No. TT-P-641d, Type II or another product acceptable to the Engineer.

The forms shall be installed from the topside in accordance with the manufacturer's recommended installation procedures. The form supports shall ensure that the forms retain their correct dimensions and positions during use at all times. Form supports shall provide vertical adjustment to maintain design slab thickness at the crest of corrugation, to compensate for variations in camber of beams and girders and to allow for deflections. Stay-in-place metal forms shall have a minimum depth of the form valley equal to 2 in (50 mm). The forms shall have closed tapered ends. Lightweight filler material shall be used in the form valleys.

All field cutting shall be done with a steel cutting saw or shears including the cutting of supports, closures and cutouts Flame cutting of forms is not permitted.

All welding shall be performed by Department certified welders in accordance with the “Welding” Subarticle in Section 6.03. Welding of forms to supports is not permitted.

The steel form supports shall be placed in direct contact with the flange of stringer or floor beam flanges and attached by bolts, clips, welding where permitted, or other approved means. Form sheets shall not be permitted to rest directly on the top of the stringer or floor beam flanges. The forms shall be securely fastened to form supports with self-drilling fasteners and shall have a minimum bearing length of 1 in (25 mm) at each end. In the areas where the form sheets lap, the form sheets shall be securely fastened to one another by fasteners at a maximum spacing of 18 in (450 mm). The ends of the form sheets shall be securely attached to the support angles with fasteners at a maximum spacing of 18 in (450 mm), or 2 corrugation widths, whichever is less.

The depth of the concrete slab shall be as shown on the plans and the corrugated forms shall be placed so that the top of the corrugation will coincide with the bottom of the deck slab. No part of the forms or their supports shall protrude into the slab. All reinforcement in the bottom reinforcement mat shall have a minimum concrete cover of 1 in (25 mm) unless noted otherwise on the plans.

The completed stay-in-place metal form system shall be sufficiently tight to prevent leakage of mortar. Where forms or their installation are unsatisfactory in the opinion of the Engineer, either before or during placement of the concrete, the Contractor shall correct the defects before proceeding with the work.

(h) Construction Joints: Construction joints other than those shown on the plans will not be permitted without prior approval of the Engineer. In joining fresh concrete to concrete that has already set, the work already in place shall have all loose and foreign material removed, and the surface roughened and thoroughly drenched with water.

All reinforcing steel shall extend continuously through joints. Where unplanned construction joints may be needed, they shall be constructed as directed by the Engineer.

(i) Expansion and Contraction Joints: Expansion and contraction joints shall be constructed at the locations and in accordance with the details specified in the Contract documents. The forming of joint openings shall be dimensioned in accordance with the joint manufacturer’s design requirements. Joints include open joints, filled joints, joints sealed with sealants, joints reinforced with steel armor plates or shapes, paraffin coated joints, and joints with combinations of these features.

For mechanical joint systems, the concrete shall be placed in such a manner that does not interfere with the movement of the joint.

Open joints shall be placed at locations designated on the plans and shall be formed by the insertion and subsequent removal of templates of wood, metal or other

suitable material. The templates shall be so constructed that their removal may be readily accomplished without damage to the work.

Filled joints shall be made with joint filler, the materials for which shall conform to the requirements of the plans and of these specifications.

(j) Pipes, Conduits and Utility Installations: The Contractor shall coordinate the installation of pipes, conduits and utilities as shown on the plans and in conformance with the Contract documents or as directed by the Engineer. The openings accommodating such pipe, conduit and utility installations shall be incorporated into the formwork by the Contractor.

(k) Anchorages: Anchor bolts and systems shall be set to the requirements of the plans and Contract documents. Anchor bolts and systems shall be clean and free of dirt, moisture or other foreign materials at the time of installation. The anchor bolts and systems shall be installed prior to placing concrete.

With the Engineer's approval, the Contractor may install anchorages after placement and setting of the concrete or in formed holes. The anchorages shall be installed into drilled or formed holes having a diameter and a depth suitable to receive the bolts in accordance with the grout manufacturer's requirements. Such holes shall be located to avoid damage to the existing reinforcement. All holes shall be perpendicular to the plane surface. The Contractor shall take every precaution necessary to prevent damage to the concrete due to freezing of water or grout in anchor bolt holes.

(l) Ornament or Reverse Moulds: Ornamental work, when so noted on the plans, shall be formed by the use of reverse moulds. These moulds shall be produced by a qualified manufacturer approved by the Engineer. They shall be built in accordance with the general dimensions and appearance shown on the plans. The Contractor shall submit all detailed drawings, models, or carvings for review by the Engineer before the moulds are made.

The Contractor shall be responsible for their condition at all times, and shall be required to remove and replace any damaged or defective moulds at no additional cost to the State.

The surfaces of the moulds shall be given a coating of form release agent to prevent the adherence of concrete. Any material which will adhere to or discolor the concrete shall not be used.

Form Liners, if required, shall be installed per the Contract Special Provisions.

(m) Removal of Falsework and Forms: The Contractor shall consider the location and character of the structure, the weather, the materials used in the mix, and other conditions influencing the early strength of the concrete when removing forms and falsework. Methods of removal likely to cause damage to the concrete surface shall not be used.

Supports shall be removed in such a manner as to permit the structure to uniformly and gradually take the stresses due to its own weight. For structures of 2 or more spans, the sequence of falsework release shall be as specified in the Contract documents or as approved by the Engineer.

Removal shall be controlled by field-cured cylinder tests. The removal shall not begin until the concrete has achieved 75% of the design compressive strength. To facilitate finishing, side forms carrying no load may be removed after 24 hours with the permission of the Engineer, but the curing process must be continued for 7 days.

When the results of field-cured cylinder tests are unavailable, the following periods,

exclusive of days when the temperature drops below 40ºF (5ºC), may govern the removal of forms:

Form Removal Requirements	
Structure Element	Minimum Time Period
Arch Centers, centering under beams, pier caps, and unsupported elements	14 days
Slabs on grade, Abutments and Walls	24 hours
Columns	2 days
Bridge Decks	28 days

The Contractor may submit alternate methods to determine the in-place strength of the concrete for removal of forms and falsework, for review and approval by the Engineer.

2. Protection from Environmental Conditions: The concrete shall be protected from damage due to weather or other environmental conditions during placing and curing periods. In-place concrete that has been damaged by weather conditions shall be either repaired to an acceptable condition or removed and replaced as determined by the Engineer.

(a) Rain Protection: The placement of concrete shall not commence or continue unless adequate protection satisfactory to the Engineer is provided by the Contractor.

(b) Hot Weather Protection: When the ambient air temperature is above 90ºF (32ºC), the forms, which will come in contact with the mix shall be cooled to below 90ºF (32ºC) for a minimum of 1 hour prior to and 1 hour after completion of the concrete placement by means of a water spray or other methods satisfactory to the Engineer.

(c) Cold Weather Protection: When there is a probability of ambient air temperature below 40ºF (5ºC) during placement and curing, a Cold-Weather Concreting Plan shall be submitted to the Engineer for review and comment. The Plan shall detail the methods and equipment, including temperature measuring devices, that will be used to ensure that the required concrete and air temperatures are maintained.

1. Placement: The forms, reinforcing steel, steel beam flanges, and other surfaces which will come in contact with the mix shall be heated to a minimum of 40ºF (5ºC), by methods satisfactory to the Engineer, for a minimum of 1 hour prior to, and maintained throughout, concrete placement.
2. Curing: For the first 6 days, considered the initial cure period, the concrete shall be maintained at a temperature of not less than 45ºF (7ºC) and the air temperature surrounding the structure shall be maintained at a temperature of not less than 60ºF (16ºC). When the concrete mix includes pozzolans or slag, the initial cure period shall be increased to 10 days. After the initial cure period, the air surrounding the structure shall be maintained above 40º F (5ºC) for an additional 8 days. If external heating is employed, the heat shall be applied and withdrawn gradually and uniformly so that no part of the concrete surface is heated to more than 90ºF (32ºC) or caused to change temperature by more than 20ºF (11ºC) in 8 hours. The Engineer may reduce or increase the amount of time that the structure must be protected or heated based on an indication of in-place concrete strength acceptable to the Engineer.

(d) Additional Requirements for Bridge Decks: Prior to the application of curing materials, all concrete placed on bridge decks shall be protected from damage due

to rapid evaporation by methods acceptable to the Engineer. During periods of low humidity (< 60% relative humidity), sustained winds of 25 mph (40 kph) or more, or ambient air temperatures greater than 80ºF (25ºC) the Contractor shall provide written details of additional measures to be taken during placement and curing.

Protection may include increasing the humidity of the surrounding air with fog sprayers and employing wind-breaks or sun-shades. Additional actions may include reduction of the temperature of the concrete prior to placement, scheduling placement during cooler times of days or nights, or a combination of these actions.

(e) Concrete Exposed to Salt Water: No Construction joints shall be formed between the levels of extreme low water and extreme high water or the upper limit of wave action as determined by the Engineer.

3. Transportation and Delivery of Concrete: All material delivered to the Project shall be supplied by a producer qualified in accordance with M.03. The producer shall have sufficient plant capacity and trucks to ensure continuous delivery at the rate required to prevent the formation of cold joints.

(a) Material Documentation: All vendors producing concrete must have their weigh scales and mixing plant automated to provide a detailed ticket. Delivery tickets must include the following information:

1. State of Connecticut printed on ticket
2. Name of producer, identification of plant
3. Date and time of day
4. Type of material
5. Cubic yards (cubic meters) of material loaded into truck
6. Project number, purchase order number, name of Contractor (if Contractor other than producer)
7. Truck number for specific identification of truck
8. Individual aggregate, cement, water weights (masses) and any admixtures shall be printed on plant tickets
9. Water/cement ratio, and
10. Additional water allowance in gallons (liters) based on water/cement ratio for mix

A State inspector may be present to monitor batching and weighing operations.

The Contractor shall notify the Engineer immediately if, during the production day, there is a malfunction of the recording system in the automated plant or weigh scales.

Manually written tickets containing all required information may be allowed for up to 1 hour after malfunction provided they are signed by an authorized representative of the producer.

(b) Transportation of Mixture: Trucks delivering concrete shall be qualified in accordance with M.03.

If the concrete mix arrives at the Project with a slump lower than allowed by specification, water may be considered as a means to temper concrete to bring the slump back to within specification. This tempering may only be done prior to discharge with the permission of the Engineer. The quantity of water in gallons (liters) added to the concrete cannot exceed the allowance shown on the delivery ticket.

The concrete shall be completely discharged into the forms within 1-1/2 hours from the batch time stamped on the delivery ticket. This time may be extended if the measured temperature of the concrete is below 90ºF (32ºC). This time may also be reduced if the temperature of the concrete is over 90ºF (32ºC).

Rejected concrete shall be disposed of by the Contractor at no cost to the State.

The addition of chemical admixtures or air entrainment admixtures at the Project

site, to increase the workability or to alter the time of set, will only be permitted if prior approval has been granted by the Engineer. The addition of air entrainment admixtures at the Project site will only be permitted by the producer's quality control staff. The Contractor is responsible for follow-up quality control testing to verify compliance with the Specifications.

4. Acceptance Testing and Test Specimens: The Contractor shall furnish the facilities and concrete required for sampling, transport to the testing location in the field, performing field testing and for casting sample cylinders for compressive-strength determinations. The Department will furnish personnel for sampling and casting Acceptance specimens and the number of specimens required will be determined by the Engineer. The equipment for the Department's testing is provided for elsewhere in the Contract.

(a) Temperature, Air Content and Slump: Field testing in accordance with AASHTO T-23, "Making and Curing Concrete Test Specimens in the Field" will be performed at the point of placement and at a frequency determined by the Engineer.

English Units

Standard Mix Class	Air Content	Slump	Concrete Temperature
A (3300 psi)	6.0 +/- 1.5%	4" +/- 1"	60º-90ºF
C (3300 psi)			
F (4400 psi)			
Modified Standards[1]	6.0 +/- 1.5% [2]	4" +/- 1" [2]	
Special Provision Mix[3]	As specified	As specified	

[1] Modifications to Standard Mixes, including mixes placed by pumping, shall be reviewed by the Engineer prior to use. These include but are not limited to the use of chemical admixtures such as high range water reducing (HRWR) admixtures and the use of coarse aggregate sizes for that class not specified in M.03.

[2] If the <u>only</u> modification is the addition of HRWR, the maximum allowable slump shall be 7 in.

[3] All concrete mixes with a mix design strength not shown in the table must be approved by the Engineer on a case-by-case basis. Limits on the plastic properties and strength requirements of these mixes are listed in the Specifications.

Metric Units

Standard Mix Class	Air Content	Slump	Concrete Temperature
A (23MPa)	6.0 +/- 1.5%	100 mm +/- 25mm	15.5º-32ºC
C (23 MPa)			
F (30 MPa)			
Modified Standards[1]	6.0 +/- 1.5% [2]	100mm +/- 25mm [2]	
Special Provision Mix[3]	As specified	As specified	

[1] Modifications to Standard Mixes, including mixes placed by pumping, shall be reviewed by the Engineer prior to use. These include but are not limited to the use of chemical admixtures such as high range water reducing (HRWR) admixtures and the use of coarse aggregate sizes for that class not specified in M.03.

[2] If the <u>only</u> modification is the addition of HRWR, the maximum allowable slump shall be 175 mm.

[3] All concrete mixes with a mix design strength not shown in the table must be approved by the Engineer on a case-by-case basis. Limits on the plastic properties and strength requirements of these mixes are listed in the Specifications.

(b) Acceptance Testing and Compressive Strength Specimens: Concrete samples are to be taken at the point of placement into the forms or molds. Representatives of the Engineer will sample the mix.

The Contractor shall provide and maintain facilities on the Project site, acceptable to the Engineer, for sampling, transporting the initial sample, casting, safe storage and initial curing of the concrete test specimens as required by AASHTO T-23. This shall include but not be limited to a sampling receptacle, a means of transport of the initial concrete sample from the location of the concrete placement to the testing location, a level and protected area of adequate size to perform testing, and a specimen storage container capable of maintaining the temperature and moisture requirements for initial curing of Acceptance specimens. The distance from the location of concrete placement to the location of testing and initial curing shall be 100 ft (30 m) or less, unless otherwise approved by the Engineer.

The specimen storage container described in this section is in addition to the concrete cylinder curing box provided for elsewhere in the Contract documents.

After initial curing, the test specimens will be transported by Department personnel and stored in the concrete cylinder curing box until they can be transported to the Division of Materials Testing for strength evaluation.

(c) Sampling Procedure for Pumping: It is the responsibility of the Contractor to provide concrete that meets required specifications at the point of placement.

Samples of concrete shall be taken at the discharge end of the pump at the point of placement with the exception of underwater concrete. The Contractor may submit an alternate location to provide a sample from the discharge end of the pump with verification showing that the characteristics of the mix will not be altered from that which would have been attained at the point of placement. The Engineer will review the documentation and other extenuating circumstances when evaluating the request.

In the case of underwater concrete the Contractor shall submit the proposed sampling location with the submittals required in 6.01.03-6(f).

(d) Additional field testing: Additional field testing such as density and yield measurements may be required at the time of placement as determined by the Engineer.

5. Progression Cylinders and Compressive Strength Specimens: Progression Cylinders outlined in this section are field cured compressive strength specimens taken for information related to when a structure or segment of a structure can be loaded or put into service, adequacy of curing and protection of concrete in the structure, or when formwork or shoring may be removed from the structure. The information produced from strength results of Progression Cylinders will not be considered for acceptance of the concrete.

The personnel, equipment, and molds for sampling, casting, curing and testing of Progression Cylinders shall be furnished by the Contractor at no expense to the Department.

Sampling, casting, and field curing of the specimens shall be performed in accordance with AASHTO T23 by an ACI Concrete Field Testing Technician Grade 1 or higher and will be witnessed by a representative of the Department.

The sample shall be taken at the point of placement into the forms or molds from one (1) or more of the same truck loads that an Acceptance sample is taken from.

A minimum of 2 cylinder results will be used to determine in-place strength.

Compression testing shall be performed in accordance with AASHTO T-22 by personnel approved by the Engineer.

A Certified Test Report in accordance with Article 1.06.07 shall be provided to the Engineer reporting the Progression Cylinder test results. A copy of the results of the compressive strength testing shall be provided to the Engineer at least 24 hours prior to any Project activity that the results may control.

6. Handling and Placing Concrete: Concrete shall be handled, placed, and consolidated by methods acceptable to the Engineer that will not segregate the mix and shall result in a dense homogeneous concrete. The methods used shall not cause displacement of reinforcing steel or other materials to be embedded in the concrete. Concrete shall not be placed until the forms and all materials have been inspected by the Engineer. All mortar from previous placements, debris, and foreign material shall be removed from the forms and steel prior to commencing placement. The forms and subgrade shall be thoroughly moistened with water immediately before concrete is placed. All water that has ponded within the forms shall also be removed. Temporary form spreader devices shall not be left in place.

All laitance or unsound material shall be removed before placing substructure concrete onto the surface of any concrete placed underwater.

Placement of concrete for each section of the structure shall be performed continuously between construction or expansion joints as shown on the plans. The delivery rate, placing sequence and methods shall be such that fresh concrete is always placed and consolidated against previously placed concrete before initial set has occurred. The temperature of the concrete mixture during placement shall be maintained between 60ºF (16ºC) and 90ºF (32ºC). During and after placement of concrete, care shall be taken not to damage the concrete or break the bond with reinforcing steel. Platforms for workers and equipment shall not be supported directly on any reinforcing steel. Forces that may damage the concrete shall not be applied to the forms or reinforcing steel.

(a) Sequence of Placement: The sequence of placement shall be in accordance with the Contract documents or as permitted by the Engineer.

Concrete for integral horizontal members, such as caps, slabs, or footings shall not be placed until the concrete for the columns, substructure, culvert walls and similar vertical members has achieved sufficient strength as stated in 6.01.03-1(m).

The concrete in arches shall be placed in such a manner as to load the formwork uniformly and symmetrically.

The base slab or footings of cast-in-place box culverts shall reach sufficient strength before the remainder of the culvert is constructed.

(b) Placement Methods: The Contractor shall notify the Engineer at least 24 hours in advance of intention to place concrete.

Vibrators shall not be used to shift the fresh concrete horizontally. Vibrators shall be adequate to consolidate the concrete and integrate it with the previous lift.

The rate of concrete placement must not produce loadings that exceed those considered in the design of the forms.

The use of chutes and pipes for conveying concrete into the forms must be reviewed by the Engineer. Chutes shall be clean, lined with smooth watertight material and, when steep slopes are involved, shall be equipped with baffles or reverses. When the discharge must be intermittent, a hopper or other device for regulating the discharge shall be provided.

Aluminum shall not be permanently incorporated into the concrete unless otherwise specified.

When placing operations involve dropping the concrete more than 5 ft (1500 mm), the Contractor shall take action to prevent segregation of the mix and spattering of

mortar on steel and forms above the elevation of the lift being placed. This restriction shall not apply to cast-in-place pilings.

When using stay-in-place forms, concrete shall not be dropped more than 3 ft (1000 mm) above the top of the forms, and the concrete shall be discharged directly over the beams or girders.

(c) Pumping: The Contractor shall use equipment specifically manufactured to pump concrete mixes and that meets the needs of the specific concrete placement.

(d) Consolidation: Unless otherwise specified, all concrete, except concrete placed under water, shall be sufficiently consolidated by mechanical vibration immediately after placement.

The Contractor shall provide a sufficient number of commercially available mechanical immersion type vibrators to properly consolidate the concrete immediately after it is placed in the forms unless external form vibrators are used. The Contractor shall have an adequate number of operable vibrators available in case of breakdown.

External form vibrators may be used if submitted prior to concrete placement and reviewed by the Engineer.

Vibration shall not be applied directly to the reinforcement or hardened concrete. Special care shall be taken in placing and consolidating concrete around ornamental moulds, form liners and other embedded items. The vibrator shall not touch these items at any time.

(e) Additional Requirements for Bridge Decks: At least 15 days before the erection of the screed rails, the Contractor shall submit screed erection plans, grades and sequence of concrete placement and proposed rate of placing concrete for review by the Engineer. These plans shall include details of equipment to be used in the placement and finishing of the concrete, including the number and type of personnel who will be engaged in placing the concrete. The screed equipment shall be a commercially available vibratory system. The use of wooden screeds is prohibited.

When setting screed rails for mechanical finishing, the Contractor shall take into consideration and make proper allowances for the deflection of the bridge superstructure due to all operations.

Screed and runway supports shall not be located on any stay-in-place metal form sheets, form supports or reinforcing steel. The Contractor shall operate the mechanical screed at least twenty-four (24) hours prior to actual placement of the concrete to verify deck survey and equipment operations to the satisfaction of the Engineer.

Concrete shall be deposited in a uniform manner across the entire width being placed, and only 2 passes of the transverse screed will be permitted over a given deck area, unless otherwise allowed by the Engineer.

If the Contractor proposes to place concrete outside of daylight hours, an adequate lighting system must be provided.

Concrete shall be deposited in accordance with the placement sequence as noted on the plans. If no sequence is indicated, the Contractor shall provide a placement sequence to the Engineer for review. The placement sequence shall proceed in such a manner that the total deflection or settlement of supporting members, and final finishing of the surface will occur before initial set of the concrete takes place.

At construction joints, concrete shall not be placed against the previously placed concrete for at least 12 hours unless otherwise allowed by the Engineer.

(f) Underwater Placement: Concrete may only be placed under water within a cofferdam unless otherwise specified in the documents or otherwise allowed by the Engineer. Placement shall begin following inspection and acceptance of the depth and character of the foundation material by the Engineer.

Underwater concrete mixes are considered non-standard designs and shall be submitted to the Engineer for approval. Typically a minimum of 10% additional cement than comparable non-underwater mixes will be required.

Underwater concrete shall be placed continuously with the surface of the concrete kept as horizontal as practical. To ensure thorough bonding, each succeeding layer shall be placed before the preceding layer has taken initial set. For large concrete placements, more than 1 tremie or pump shall be used to ensure compliance with this requirement.

Mass concrete placement requirements, outlined in 6.01.03-6(g), do not apply to underwater concrete.

To prevent segregation, underwater concrete shall be placed in a compact mass, in its final position, by means of a tremie, concrete pump, or other approved method and shall not be disturbed. Still water shall be maintained at the point of deposit. Cofferdams shall be vented during the placement and curing of the concrete to equalize the hydrostatic pressure and thus prevent flow of water through the concrete.

If a tremie is used, the method of depositing the concrete shall be detailed in a working drawing submitted to the Engineer for review. The tube shall have watertight couplings and shall permit the free movement of the discharge end over the area of the work.

(g) Mass concrete placement: Mass concrete placement shall be defined as any placement, excluding underwater concrete placement, in which the concrete being cast has dimensions of 5 ft (1500 mm) or greater in each of 3 different directions. For placements with a circular cross-section, a mass concrete placement shall be defined as any placement that has a diameter of 6 ft (1800 mm) or greater and a height of 5 ft (1500 mm) or greater. For all mass concrete placements, the mix temperature shall not exceed 85°F (30°C) as measured at point of discharge into the forms.

Any special concrete mix design proposed by the Contractor to meet the above temperature requirements shall be submitted to the Engineer for review.

7. Finishing Plastic Concrete: Unless otherwise specified in the Contract documents, after concrete has been consolidated and prior to final curing, all surfaces of concrete that are not placed against forms shall be struck-off to the planned elevation or slope. The surface shall be finished by floating with an acceptable tool. While the concrete is still in a workable state, all construction and expansion joints shall be tooled with an edger. Joint filler shall be left exposed. For requirements on float finish, refer to 6.01.03-10, “Finishing Concrete Surfaces.”

After completion of the placing and finishing operation and for at least 12 hours after the concrete has set, the Contractor shall not operate any equipment in the immediate vicinity of the freshly placed concrete if, in the opinion of the Engineer, it could cause excessive vibration, movement or deflection of the forms.

The addition of water to the surface of the concrete to assist in finishing operations will not be permitted.

(a) Bridge Decks: After the concrete has been consolidated and brought to the proper elevation by the screed machine, it shall be finished by use of a suitable float. The Contractor shall not disturb the fresh concrete after it has been finished.

(b) All finishing work, including the application of the fog spray and placement of the curing mats, shall be performed from work bridges supported above the deck surface. A work bridge shall be made available to the Engineer for inspection of the concrete work.

Surfaces that are to be covered with a waterproofing membrane shall be finished to a smooth surface, free of mortar ridges and other projections and in accordance with the membrane manufacturer's recommendations.

Unless otherwise noted in the Contract, the concrete wearing surfaces shall be given a skid-resistant texture by dragging, brooming, tining, or by a combination of these methods These methods shall be done after floating and at such time and in such manner that the desired texture will be achieved while minimizing displacement of the larger aggregate particles.

1. Dragging: The surface shall be finished by dragging a seamless strip of damp burlap over the surface. The burlap to be dragged shall consist of sufficient layers and have sufficient length in contact with the concrete to slightly groove the surface. The burlap shall be drawn longitudinally along the surface in a slow manner so as to leave an even texture. The burlap shall be kept damp, clean, and free of particles of hardened concrete. The Contractor may propose an alternate material for the Engineer's consideration.
2. Tining: Tining shall be in a transverse direction using a wire broom, comb, or float having a single row of tines or fins. The tining grooves shall be between 1/16 in (1.5 mm) and 3/16 in (5 mm) wide and between 1/8 in (3 mm) and 3/16 in (5 mm) deep, spaced 1/2 in (12.5 mm) to 3/4 in (20 mm) on centers. Tining shall be discontinued 12 in (300 mm) from the curb line on bridge decks. The area adjacent to the curbs shall be given a light broom finish longitudinally. As an alternative, tining may be achieved using a machine designed specifically for tining or grooving concrete pavements.

   The transverse grooving shall be performed when the grooves can be formed to a maximum depth of 3/16 in (5 mm) with relative ease and without the walls of the grooves closing in on each other. The tining shall be aligned so as to prevent overlapping of grooves in any 2 successive transverse passes. The Contractor shall measure the depth of the grooves in the presence of the Engineer with an appropriate device to ensure compliance.

(b) Surface Testing and Correction: The completed surface shall be constructed in accordance with grades and cross slopes shown on the plans. The entire surface shall be checked by the Contractor in the presence of the Engineer, with an acceptable 10 ft (3 m) straightedge.

1. The surface shall not vary more than +/- 1/8 in (3 mm) per 10 ft (3 m) for decks which will not be covered with an overlay.
2. The surface shall not vary more than +/- 1/4 in (6 mm) per 10 ft (3 m) for decks which will be covered with an overlay.

Variances greater than these, which, in the opinion of the Engineer, may adversely affect the riding qualities of the surface shall be corrected, and this shall be done at the expense of the Contractor. The Contractor shall submit a corrective procedure to the Engineer for review and approval. The procedure shall correct such irregularities by methods such as, but not limited to, concrete planing or grooving.

8. Bearing Surfaces: Concrete surfaces under metallic masonry plates and elastomeric bearings shall have a float finish. After the concrete has set, the area which will be in contact with the masonry plate shall be ground as necessary to provide

full and even bearing. The finished surface shall not vary from a straightedge laid on the surface in any direction within the limits of the masonry plate by more than 0.0625 in (1.5 mm). Surfaces which fail to conform shall be ground or filled until acceptable to the Engineer.

9. Curing Concrete: All newly placed concrete shall be cured so as to prevent loss of water by use of the methods specified. The Engineer may request that the Contractor furnish a curing plan.

The duration of the initial and final curing period in total shall continue uninterrupted for a minimum of 7 days.

(a) Curing Methods:

1. Forms-In-Place Method: Formed surfaces of concrete may be cured by retaining the forms in place without loosening. During periods of hot weather, water shall be applied to the forms until the Engineer determines that it is no longer required.
2. Water Method: Exposed concrete surfaces shall be kept continuously wet by ponding, spraying, or covering with materials that are kept continuously and thoroughly wet. Such materials may consist of cotton mats, multiple layers of burlap, or other approved materials that do not discolor or otherwise damage the concrete.
3. Waterproof Cover Method: This method shall consist of covering exposed surfaces with a waterproof sheet material to prevent moisture loss from the concrete. The concrete shall be wet at the time the cover is installed. The sheets shall be of the widest practicable width and adjacent sheets shall overlap a minimum of 6.0 in (150 mm) to form a waterproof cover of the entire concrete surface and shall be adequately secured. Broken or damaged sheets shall be immediately repaired and the concrete shall be remoistened.

(b) Additional Requirements for Bridge Decks:

1. Curing Plan: The Contractor shall submit to the Engineer, at least 14 days prior to the placement of concrete for the bridge deck, a detailed curing plan that describes the following:
   A. the initial and final curing durations,
   B. equipment and materials to be used for curing concrete and monitoring concrete temperature, and
   C. proposed primary and secondary water and heat sources
2. Initial Curing Period: A water fog spray shall be used by the Contractor from the time of initial placement until the final curing period begins. The amount of fog spray shall be strictly controlled so that accumulations of standing or flowing water on the surface of the concrete shall not occur.

   Should atmospheric conditions render the use of fog spray impractical, the Contractor shall request approval from the Engineer to use a curing compound that meets the requirements of M.03 in lieu of a fog spray. The application shall be in accordance with the manufacturer's recommendation and be compatible with the membrane waterproofing.
3. Final Curing: After completion of finishing and as soon as any bleed water has dissipated and the concrete reaches sufficient strength to avoid marring, the Final curing period shall begin and the entire concrete surface shall be covered with water-retaining materials such as cotton mats, multiple layers of burlap, or other materials approved by the Engineer. Materials used shall be kept saturated by means of an acceptable sprinkler or wetting system.

The Contractor may cover the wet water-retaining material with a suitable polyethylene film to minimize evaporation during the curing period. The use of the polyethylene film does not relieve the Contractor from maintaining saturation of the curing materials.

4. Temperature Monitoring: The internal temperature of the concrete shall be monitored with a calibrated continuous recording thermometer for a minimum of 7 days. The air temperature at the concrete surface or the air temperature between the concrete surface and its protective covering shall be monitored with a minimum of 1 recording thermometer.

   The number and placement of the thermometers will be determined by the Engineer. A minimum of 2 thermometers per concrete placement shall be provided by the Contractor.

   The following types of thermometers shall be used to monitor curing temperatures:

   A. Continuously Recording Thermometer: The thermometer shall be capable of continuously recording temperatures within a range of -4 ºF to 122 ºF (-20°C to 50°C) for a minimum of 24 hours.
   B. Maximum–Minimum Recording Thermometer: For all placements, the thermometer shall be capable of recording maximum and minimum temperatures in a range of -4 ºF to 122 ºF (-20°C to 50°C).

10. Finishing Concrete Surfaces: Any minor repairs due to fins, bulges, offsets and irregular projections shall be performed immediately following the removal of forms. For areas of newly placed concrete that are honeycombed or segregated the Contractor shall provide a written corrective procedure for review by the Engineer prior to the work being performed. Construction and expansion joints in the completed work shall be left carefully tooled and free of mortar and concrete. The joint filler shall be left exposed for its full length with clean and true edges.

The cavities produced by form ties and all other holes, broken corners or edges, and other defects shall be cleaned, saturated with water, pointed and trued with a mortar conforming to M.11.04. Cement similar in color to the exposed surface being repaired shall be added to the mortar. Mortar used in pointing shall be used within 1 hour of mixing. The concrete shall be finished as defined below if required and the cure continued as previously specified in "Curing Concrete."

Finishing work shall not interrupt the curing period unless permitted by the Engineer. The curing period may be extended to provide the minimum total number of days required.

Concrete surface finishes shall be classified as follows:

(a) Float Finish: This finish shall be achieved by placing an excess of material in the form and removing or striking off of such excess forcing the coarse aggregate below the mortar surface. Concave surfaces in which water will be retained will not be allowed. After the concrete has been struck off, the surface shall be thoroughly worked and floated. Before this last finish has set, the surface shall be lightly stripped with a fine brush to remove the surface cement film, leaving a fine-grained, smooth, but sanded texture. Curing, as specified elsewhere, shall follow. Any surfaces that will support appurtenances such as light standards, railing, or fences shall be finished in accordance with 6.01.03-8, “Bearing Surfaces.”

(b) Rubbed Finish: The initial rubbing shall only be allowed within 3 days after placement. The entire surface shall be thoroughly wet with a brush and rubbed with a No. 16 Carborundum Stone or an abrasive of equal quality, bringing the surface to a paste. The rubbing shall be continued sufficiently to remove all form

marks and projections, producing a smooth, dense surface without pits or irregularities. The paste formed by the rubbing may be finished by stripping with a clean brush, or it may be spread uniformly over the surface and allowed to re-set. If all or portions of the rubbed surface are unacceptable to the Engineer or a rubbed finish is not provided within 3 days after removal of forms, the Contractor will be directed to provide a grout clean down finish.

(c) Grout Clean-Down Finish: As soon as all cavities have been filled as required elsewhere and the cement mortar has set sufficiently, grout clean-down shall be performed. All burrs, unevenness, laitance, including that in air holes, and any other material which will adversely affect the bond of the grout to the concrete, shall be removed by acceptable methods. This cleaning shall be done from the top or uppermost part of the surface to be finished to the bottom.

A mixture of a fine aggregate and Portland cement shall be thoroughly blended while dry. The proportions shall be such that when mixed with the proper amount of water, the color will match that of the concrete to be finished. Water shall be added to this mixture in an amount which will bring the grout to a workable thick paint-like consistency.

The surface to be treated shall be thoroughly wetted with a sufficient amount of water to prevent the absorption of water from the grout. Grout shall then be applied to the wetted surface before setting of the grout occurs. Grout which has set shall not be re-tempered and shall be disposed of by the Contractor at no cost to the State.

The grout shall be uniformly applied over the entire surface, completely filling all air bubbles and holes. Immediately after applying the grout, the surface shall be floated with a suitable float, scouring the surface vigorously. While the grout is still plastic, all excess grout shall be removed.

After the final rubbing is completed and the surface has dried, it shall be rubbed to remove loose powder and shall be left free from all unsound patches, paste, powder, and objectionable marks. Wetting, application and removal of excess grout shall be completed in 1 work shift.

All finished surfaces shall be cured for a minimum of 24 hours. Horizontal surfaces shall have a float finish and vertical exposed surfaces shall have a rubbed finish. A grout clean down finish may be substituted for a rubbed finish as noted in this section or as directed by the Engineer.

11. Mortar, Grout, Epoxy and Joint Seal

(a) Mortar and Grout: This work consists of the making and placing of mortar and grout. At least 48 hours prior to the planned use, a copy of the installation instructions and MSDS sheet(s) shall be provided to the Engineer for review and concurrence of their applicability and for verification of proper hole sizes in concrete structures. Such uses include mortar for filling under masonry plates, mortar used to fill voids and repair surface defects, grout used to fill sleeves for anchor bolts, and mortar and grout for other such uses where required or approved.

Concrete areas to be in contact with the mortar or grout shall be cleaned of all loose or foreign material that would in any way prevent bond, and the concrete surfaces shall be flushed with water and allowed to dry until no free-standing water is present.

The mortar or grout shall completely fill and shall be tightly packed into recesses and holes, on surfaces, under structural members, and at other locations specified. After placing, all surfaces of mortar or grout shall be cured as previously specified in 6.01.03-9(a)-2 “Curing Concrete – Water Method," for a period of not less than 3 days.

(b) Epoxy: The epoxy shall be prepared and placed in accordance with the manufacturer's directions and with the equipment prescribed by the manufacturer. Instructions furnished by the supplier for the safe storage, mixing, handling and application of the epoxy shall be followed. Contents of damaged or previously opened containers shall not be used.

(c) Joint Seal: This work consists of sealing joints where shown on the plans or as otherwise directed by the Engineer.

Before placement of the sealing material, the joints shall be thoroughly cleaned of all scale, loose concrete, dirt, dust or other foreign matter. Projections of concrete into the joint space shall be removed. The joint shall be clean and dry before the sealing compound is applied.

The joint sealant shall be prepared and placed in accordance with the manufacturer's directions and with the equipment prescribed by the manufacturer. The sealing compound shall be flush with, or not more than 1/8 in (3 mm) above the adjacent surface of concrete, cutting off all excess compounds after the application. The joints shall be sealed in a neat and workmanlike manner and when the work is completed, the joints shall effectively seal against infiltration of moisture and water.

The Contractor shall arrange for, and have present at the commencement of the joint-sealing operation, a technically competent manufacturer’s representative knowledgeable in the methods of installation of the sealant. The Contractor shall also arrange to have the representative present at such other times as the Engineer may request.

(d) Closed Cell Elastomer: The closed cell elastomer shall be of the thickness, size and type specified and installed as shown on the plans and shall be in accordance with M.03.

12. Application of Loads: Loads shall not be applied to concrete structures until the concrete has attained sufficient strength and, when applicable, sufficient pre-stressing and post tensioning has been completed, so that damage will not occur. The means to determine when the concrete has attained sufficient strength shall be the use of Progression cylinders as defined elsewhere in this specification, or other means approved in advance by the Engineer.

(a) Earth Loads: The placement of backfill shall not begin until the concrete is cured and has reached at least 80% of its specified strength unless otherwise permitted by the Engineer. The sequence of placing backfill around structures shall minimize overturning or sliding forces and flexural stresses in the concrete.

(b) Construction Loads: Light materials and equipment may be hand carried onto bridge decks only after the concrete has been in place at least 24 hours providing curing is not interfered with and the surface texture is not damaged.

Prior to the concrete achieving its specified compressive strength, any other live or dead loads imposed on existing, new, or partially completed portions of structures, shall not exceed the reduced load carrying capacity of the structure, or portion of structure. The Contractor may be required to submit calculations to the Engineer that verify these requirements are being met. The compressive strength of concrete (f' c) to be used in computing the load-carrying capacity shall be the smaller of the actual field compressive strength at the time of loading or the specified design strength of the concrete. The means to determine the actual field compressive strength shall be approved by the Engineer.

For post-tensioned structures, no live or dead loads shall be allowed on any span until the steel for that span has been tensioned.

(c) Loading of Completed Elements: Precast concrete or steel girders shall not be placed on substructure elements until the substructure concrete has attained 85% of its specified strength.

No load shall be allowed on mortar or grout that has been in place less than 72 hours.

(d) Traffic Loads: The concrete deck will not be opened to traffic until at least 14 days after the last placement of deck concrete and until such concrete has attained its specified strength.

13. Dispute Resolution: The basis of any dispute resolution is side-by-side and quality control testing by the Contractor or the Contractor's representative. The Contractor and Engineer should perform independent testing on the material to reasonably establish the true characteristics of the material at the time of delivery. Absent of Contractor QC testing, the Engineer's test results will apply to the quantity of concrete represented by the sample, not to exceed 75 c.y. (60 cu.m).

(a) Air Content: Contractor QC Testing must be performed by personnel qualified by The American Concrete Institute as an ACI Concrete Field Testing Technician Grade 1 or higher and performed in accordance with AASHTO T-23. If the Contractor's test results vary from those of the Engineer, the Contractor shall immediately notify the Engineer of the difference and work cooperatively to determine the reasonable cause and recognize the valid test. Should there be agreement, the result of the valid test will be used for acceptance and adjustment purposes for that lot of material. Should there not be an agreement as to the valid test, an additional set of tests should be performed. Results of all valid tests on the same lot may be averaged and used for acceptance and adjustment purposes. Should the Contractor wish to perform additional QC testing on subsequent material, the lot sizes may be adjusted to the amount of material included in that specific delivery. Any such QC testing must be witnessed and agreed to by the Engineer.

(b) Compressive Strength: Contractor QC testing for compressive strength must be performed in accordance with AASHTO T-22 by personnel approved by the Engineer. Samples used to dispute the Engineer's test results must be made simultaneously and from the same batch of concrete. Should the Contractor wish to pursue a dispute resolution with regard to compressive strength, the Contractor shall submit in writing to the Engineer all test results, control charts, or other documentation that may be useful in determining if the specific lot(s) of material met the Contract specifications. The Engineer will consider the submittal and may average specific test results on the disputed lot(s) for acceptance and adjustment purposes. Destructive testing of any kind on the placed concrete structure will not be allowed.

6.01.04—Method of Measurement: This work will be measured for payment as follows:

1. Concrete: The quantity of concrete will be the actual volume in cubic yards (cubic meters) of the specified class or classes, with the exception of underwater concrete, completed and accepted within the neat lines as shown on the plans or as ordered by the Engineer.

When concrete is placed against bedrock, a maximum of 6 additional inches (150 additional millimeters) beyond the neat lines can be measured for payment.

No deduction will be made for panels, form liners, reinforcing bars, structural steel

shapes or for pile heads. There will be no deduction made for the volume occupied by culvert and drainage pipes, scuppers, weep holes, public utility structures or any other opening, unless the surface area of any such single opening is 9 s.f. (1 sq.m) or more.

In the case of culverts or drainage pipes, the computation of the surface area will be based on the nominal diameter of the pipe, disregarding the thickness of the shell.

Miscellaneous materials necessary for completion of the work such as felt, mortar, grout, epoxy, joint seal, paraffin coating and closed cell elastomer will not be measured for payment.

Incidental work such as forming for anchor bolts, utilities, keyways, and sampling and testing will not be measured for payment.

2. Underwater Concrete: When underwater concrete is used, it will be measured by the volume in cubic yards (cubic meters) within the actual horizontal limits of the cofferdam and between the elevations established by the Engineer.

3. Joint Filler: This material will be measured by the area in square feet (square meters) of the joint filler, of the type and thickness specified, actually installed and accepted.

6.01.05—Basis of Payment: Payment for this work will be made as follows:

1. Concrete: Progress payments may be allowed for completed major labor elements of work such as forming, placing and curing. Prior to placement, the Contractor shall submit a proposed schedule of values for review and approval by the Engineer.

Payment for any lot of concrete allowed to remain in place will be adjusted when the field and laboratory testing of the material is completed. The quantity of concrete in each lot will be a maximum of 75 c.y. (60 cu.m). Payment for each lot of concrete will be adjusted based on the results of the Acceptance testing performed by the Engineer.

The following pay factors apply for Standard and Modified Standard Mix classes with regard to entrained air content:

Air Pay Factors

Measured air (%)		Pay factor (%)
4.5 to 7.5		1.00 (100)
4.3 and 4.4	7.6 and 7.7	0.98 (98)
4.1 and 4.2	7.8 and 7.9	0.96 (96)
3.9 and 4.0	8.0 and 8.1	0.94 (94)
3.7 and 3.8	8.2 and 8.3	0.92 (92)
3.5 and 3.6	8.4 and 8.5	0.90 (90)
Concrete lots with less than 3.5% or greater than 8.5% entrained air will be rejected.		

The following pay factors apply for Standard and Modified Standard Mix classes with regard to compressive strength:

Strength Pay Factors

Compressive Strength (%)	Pay factor (%)
95 or greater	1.00 (100)
90 to 94.9	0.95 (95)
85 to 89.9	0.90 (90)
Concrete lots with less than 85% specified strength will be rejected.	

The payment adjustment value for entrained air and 28-day strength for any lot of concrete that is allowed to remain in-place is determined using the formulas below. An index price of $400.00 per c.y. (cu.m) shall be used to calculate each adjustment. The total adjustment value will be the sum of each individual adjustment value and will be deducted from the payment for the appropriate item.

English Units:	**Metric Units:**
Adjustment (air) = (1 - air pay factor) x $400/c.y. x lot size (c.y.)	Adjustment (air) = (1 - air pay factor) x $400/cu.m x lot size (cu.m)
Adjustment (strength) = (1 - strength pay factor) x $400/c.y. x lot size (c.y.)	Adjustment (strength) = (1 - strength pay factor) x $400/cu.m x lot size (cu.m)
Total Adjustment = Adjustment (air) + Adjustment (strength)	

The Contractor shall request permission from the Engineer to remove and replace a lot(s) of concrete to avoid a negatively adjusted payment. Any replacement material will be sampled, tested and evaluated in accordance with this specification.

No direct payment will be made for any labor, equipment or materials used during the sampling and testing of the concrete for Progression or Acceptance. The cost shall be considered as included in the general cost of the work or as stated elsewhere in the Contract. The work of transporting the concrete test specimens, after initial curing, for Acceptance testing will be performed by the Department without expense to the Contractor.

This material will be paid for at the Contract unit price per cubic yard (cubic meter) less any adjustments, for the specified class or classes, complete in place, which price shall include all materials, equipment, tools, labor and work incidental thereto, including heating, all admixtures, joint sealer, roofing felt and closed cell elastomer, and any miscellaneous materials such as metal flashing and metal used in expansion joints and bearings.

2. Underwater Concrete: When this class of concrete is used, it will be paid for at the Contract unit price per cubic yard (cubic meter) for "Underwater Concrete," complete in place, which price shall include all materials, equipment, tools, labor and work incidental thereto.

3. Joint Filler: Expansion joint filler will be paid for at the Contract unit price per square foot (square meter) for "Joint Filler for Bridges" of the type and thickness specified, complete in place, which price shall include all materials, equipment, tools, labor and work incidental thereto.

Pay Item	Pay Unit
Concrete (Class A, C, F)	c.y. (cu.m)
Underwater Concrete	c.y. (cu.m)
Joint Filler for Bridges (Thickness and Type)	s.f. (s.m.)

CONNECTICUT
SUPPLEMENTAL SPECIFICATION
SECTION 6.03
STRUCTURAL STEEL

Delete the entire section and replace it with the following:

SECTION 6.03
STRUCTURAL STEEL

6.03.01—Description: Work under this item shall consist of furnishing, fabricating, transporting, storing, handling and erecting of structural steel of the type and size designated, as shown on the plans, as directed by the Engineer and in accordance with these Specifications.

All work except as stated in the following paragraph shall conform to the requirements of the AASHTO LRFD Bridge Construction Specifications and the ANSI/AASHTO/AWS D1.5 – Bridge Welding Code.

All work subject to railroad loading shall conform to AREMA and the ANSI/AASHTO/AWS D1.5 – Bridge Welding Code.

6.03.02—Materials: The materials for this work shall conform to the requirements of Section M.06.

Materials for this work shall be stored off the ground before, during, and after fabrication. It shall be kept free from dirt, grease and other contaminants and shall be reasonably protected from corrosion. In addition, weathering steel shall be stored as to allow free drainage and promote the development of the oxide coating and a uniform appearance.

6.03.03—Construction Methods:

1. **Pre-qualification:**

   (a) Fabricators producing material for Department projects under this item are required to have as a minimum, an active AISC Certification for Simple Steel Bridges. For fabrication of material for use on bridges other than un-spliced rolled beam bridges, AISC Major Steel Bridge Certification is required. If so noted on the plans, additional AISC endorsement for fabrication of fracture critical members is also required.

   (b) Field Welders: Prior to working on material for Department projects under this Specification, all field welders, field welding operators, and field tackers must possess a valid welder certification card issued by the Department's Division of Materials Testing. If such person has not been engaged in welding operations on a Department project or project acceptable to the Department within a period of six (6) months, or cannot produce an approved welding certificate dated within the previous twelve (12) months from a welding agency acceptable to the Engineer, the field welder shall be required to re-qualify through examination. The Engineer may require re-qualification of anyone whose quality of work is in question.

2. **Submittals:**

   (a) Shop Drawings: Prior to any fabrication, the Contractor shall submit shop

drawings in accordance with Article 1.05.02 to the Engineer for review. Shop drawings shall include a cambering procedure and diagram. In the case of trusses, the Contractor is responsible for calculation of the camber (lengthening and shortening) of all truss members.

(b) Shop Schedule: The Contractor shall submit a detailed shop fabrication schedule to the Engineer for review within 30 days of the Notice to Proceed unless otherwise agreed to by the Engineer. At a minimum the schedule shall include the start date, milestone dates, and completion date. Any significant changes shall be brought to the attention of the Engineer immediately.

(c) Welding Procedures: Prior to start of fabrication, all welding procedures shall be submitted to the Engineer for review.

(d) Working Drawings for Falsework and Erection of Structural Steel: Prior to erecting any steel fabricated under this Specification, the Contractor shall submit drawings and supporting calculations, including erection stresses, in accordance with Article1.05.02 to the Engineer. The design of temporary supports and falsework shall conform to the *AASHTO Specifications,* the *AASHTO Guide Design Specifications for Bridge Temporary Works* or any other standard acceptable to the Engineer. Falsework shall be of sufficient rigidity and strength to safely support all loads imposed and to produce in the finished structure the lines and grades indicated in the Contract.

The working drawings submittal shall include at a minimum:

- Title block with Contract number, Project identification number (PIN), town, and structure number and name.
- Plan of the work area showing support structures, roads, railroad tracks, Federal and State regulated areas as depicted on the plans, utilities or any other information relative to erection.
- A detailed narrative describing the erection sequence for main members and secondary members (cross frames, diaphragms, lateral bracing, portals, etc.), noting use of holding cranes or temporary supports, falsework, or bents.
- Delivery location of each girder.
- Location of each crane for each pick.
- Capacity chart for each crane and boom length used in the work.
- The capacity of the crane and of all lifting and connecting devices shall be adequate for the total pick load including spreaders and other materials. In the area of railroads and navigable waterways, the capacity shall be as required by Amtrak, Metro North, U.S. Coast Guard or other regulatory authorities. No picks shall be allowed over vehicular or pedestrian traffic unless otherwise noted on the plans or permitted by the Engineer.
- Pick point location(s) on each member.
- Lifting weight of each member including clamps, spreader beams, etc.
- Lift and setting radius for each pick (or maximum lift radius).
- Description of lifting devices or other connecting equipment.
- Girder tie-down details or other method of stabilizing erected girders.
- Bolting requirements, including the minimum number of bolts and erection pins required to stabilize members during the erection sequence.
- Blocking details for stabilizing members supported on expansion bearings and on bearings that do not limit movement in the transverse direction.

- The method and location for temporary supports for field spliced or curved girders, including shoring, false work, holding cranes, guys, etc. The Engineer will review, but not approve details of temporary supports. The design, erection, and stability of these supports shall be the sole responsibility of the Contractor.
- Offsets necessary to adjust expansion bearings during erection to provide for temperature variance and dead load rotation.

The following notes shall be placed on the Erection Drawings:

- Cranes shall be operated in accordance with the Connecticut Department of Public Safety regulations.
- The Contractor shall be responsible for verifying the weight of each lift and for insuring the stability of each member during all phases of erection.
- Members shall be subject to only light drifting to align holes. Any drifting that results in distortion of the member or damage to the holes will be cause for rejection of the member.
- Field reaming of holes shall not be performed unless required by the Contract Drawings or approved by the Engineer.

The Contractor shall submit these documents to the Engineer at least 60 calendar days in advance of their proposed use. If the proposed method of erection requires additional members or modifications to the existing members of the structure, such additions and modifications shall be made by the Contractor at no expense to the State.

3. Shop Fabrication: Unless otherwise shown on the plans or indicated in the Special Provisions, Structural Steel shall be fabricated in accordance with the AASHTO LRFD Bridge Construction Specifications, amended as follows:

(a) Notification: The Contractor shall submit written notification to both the Engineer and the Division Chief (OOC) not less than 30 calendar days prior to start of fabrication. No material shall be manufactured or worked in the shop before the Engineer has been so notified. The notification shall include the name and location of the fabrication shop where the work will be done so that arrangements can be made for an audit of the facility and the assignment of a Department Quality Assurance inspector.

(b) Camber: All members shall be cambered prior to heat curving and painting. Rolled beams shall be heat cambered by methods approved by the Engineer. Plate girders shall be cambered by cutting the web to the prescribed shape with allowances for shrinkage due to cutting, welding, and heat curving. The fabricator is responsible to determine what allowances should be made. Rolled, plate-rolled, or fabricated sections shall be cambered to the total amount shown on the plans and within the camber deviation tolerances permitted for welded beams and girders, as indicated in the ANSI/AASHTO/AWS D1.5 Bridge Welding Code. The Contractor must submit to the Engineer for approval, a plan for corrective action if the actual camber is not within tolerance.

(c) Welding: Unless otherwise indicated in the Contract, all work shall be performed in accordance with ANSI/AASHTO/AWS D1.5 – Bridge Welding Code.

(d) Preassembly of Field Connections: Field connections of main members of continuous beams, plate girders, bents, towers, rigid frames, trusses and arches shall be preassembled prior to erection as necessary to verify the geometry of the completed structure or unit and to verify or prepare field splices. The Contractor shall propose an appropriate method of preassembly for review and comment by the Engineer. he method and details of preassembly shall be consistent with the

erection procedures shown on the working drawings and camber diagrams. As a minimum, the preassembly procedure shall consist of assembling 3 contiguous panels accurately adjusted for line and camber. Successive assemblies shall consist of at least 1 section or panel of the previous assembly plus 2 or more sections or panels added at the advancing end. In the case of structures longer than 150 ft (45 m), each assembly shall not be less than 150 ft (45 m) long regardless of the length of individual continuous panels or section. All falsework, tools, machinery and appliances, including drift pins and bolts necessary for the expeditious handling of the work shall be provided by the Contractor at no cost to the State.

(e) Inspection: The Contractor shall furnish facilities for the inspection of material and workmanship in the shop by the Engineer. The Engineer and his representative shall be allowed free access to the necessary parts of the premises.

The Engineer will provide Quality Assurance (QA) inspection at the fabrication shop to assure that all applicable Quality Control plans and inspections are adequately adhered to and maintained by the Contractor during all phases of the fabrication. A thorough inspection of a random selection of elements at the fabrication shop may serve as the basis of this assurance.

Prior to shipment to the Project, each individual piece of structural steel shall be stamped or marked in a clear and permanent fashion by a representative of the fabricator's Quality Control (QC) Department to indicate complete final inspection by the fabricator and conformance to the Project specifications for that piece. The stamp or mark must be dated. A Materials Certificate in accordance with Article 1.06.07 may be used in lieu of individual stamps or markings, for all material in a single shipment. The Materials Certificate must list each piece within the shipment and accompany the shipment to the Project Site.

Following the final inspection by the fabricator's QC personnel, the Engineer may select pieces of structural steel for re-inspection by the Department's QA inspector. Should non-conforming pieces be identified, all similar pieces must be re-inspected by the fabricator and repair procedure(s) submitted to the Engineer for approval. Repairs will be made at the Contractor's expense.

The pieces selected for re-inspection and found to be in conformance, or adequately repaired pieces, may be stamped or marked by the QA inspector. Such markings indicate the Engineer takes no exception to the pieces being sent to the Project Site. Such marking does not indicate acceptance or approval of the material by the Engineer.

Following delivery to the Project Site, the Engineer will perform a visual inspection of all material to verify shipping documents, fabricator markings, and that there was no damage to the material or coatings during transportation and handling.

The Engineer is not responsible for approving or accepting any fabricated materials prior to final erection and assembly at the Project Site.

(f) Nondestructive Testing: All nondestructive testing of structural steel and welding shall be performed as designated in the plans and specifications. Such testing shall be performed by personnel approved by the Engineer.

Personnel performing Radiographic, Ultrasonic or Magnetic Particle testing shall be certified as a NDT Level II technician in accordance with the American Society for Non Destructive Testing (ASNT), Recommended Practice SNT-TC-1A.

Nondestructive testing shall be performed in accordance with the procedures and standards set forth in the AASHTO/AWS D1.5, Bridge Welding Code. The

Department reserves the right to perform additional testing as determined by the Engineer.

All nondestructive testing shall be witnessed by an authorized representative of the Department. Certified reports of all tests shall be submitted to the Division of Materials Testing for examination. Each certified report shall identify the structure, member, and location of weld or welds tested. Each report shall also list the length and location of any defective welds and include information on the corrective action taken and results of all retests of repaired welds.

Should the Engineer require nondestructive testing on welds not designated in the Contract, the cost of such inspection shall be borne by the Contractor if the testing indicates that any weld is defective. If the testing indicates the weld to be satisfactory, the actual cost of such inspection will be paid for by the Department.

(g) Marking: Each member shall be identified with an erection mark corresponding with the member identification mark on the approved shop drawings. Identification marks shall be impressed into the member with a low stress stamp in a location in accordance with standard industry practice.

(h) Shipping, Handling, Storage and Receiving: The Contractor shall make all arrangements necessary to properly load, transport, unload, handle and store all material. The Contractor shall furnish to the Engineer copies of all shipping statements. The weight (mass) of the individual members shall be shown on the statements. Members having a weight (mass) of more than 3 tons (2700 kg) shall have the weight (mass) marked thereon. All material shall be unloaded promptly upon delivery. The Contractor shall be responsible for any demurrage charges. Damage to any material during transportation, improper storage, faulty erection, or undocumented fabrication errors may be cause for rejection of said material at the Project Site. Top lateral bracing shall be installed in tub girders prior to shipping and erection of the field pieces. All costs associated with any corrective action will be borne by the Contractor.

4. Field Erection: A meeting shall be held on Site prior to any erection of structural steel. The Contractor shall name the person responsible for the steel erection work and provide copies of all crane operator licenses. Proposed equipment, rigging, timetable and methods shall be proposed at this meeting.

(a) Falsework: Any temporary work shall be constructed in conformance with the working drawings. The Contractor shall verify that the quality of materials and work employed are consistent with their design.

All girders shall be stabilized with falsework, temporary braces, or holding cranes until a sufficient number of adjacent girders are erected with all diaphragms and cross frames connected to provide necessary lateral support as shown in the erecting diagrams.

Adjustment shall be provided in the falsework and other temporary supports so that the temporary elevation of the structural steel provided by the falsework is consistent with the deflections that will occur as the structure is completed. The elevation of falsework shall be such as to support the girders at the cambered no-load elevation. Unloading of temporary supports shall be performed such that all temporary supports at each cross section are unloaded uniformly. Unless specifically permitted by the Engineer, welding of falsework support brackets to structural steel is not allowed.

Unless erected by the cantilever method, truss spans shall be erected on blocking. The blocking shall be left in place until the tension chord splices are fully bolted and

all other truss connections pinned and bolted and the proper geometric shape is achieved.

(b) Anchorages: Anchor bolts and similar materials which are to be placed during the erection of the structural steel shall be carefully and accurately set to the requirements of Article 6.01.03.

(c) Bearings: Bearing plates shall have a full and uniform bearing upon the substructure masonry. Bearing plates shall be placed upon bearing areas which are finished according to the requirements of Article 6.01.03.

Prefabricated pads conforming to the requirements of Article M.12.01 shall be installed unless specifically noted otherwise in the Contract plans.

Each piece shall be the same size as the bearing plate it is to support and the holes to accommodate the anchor bolts shall be clearly and accurately punched before setting the pad in place.

In placing expansion bearings, due consideration shall be given to the temperature at the time of erection and stage construction requirements. The nuts of anchor bolts at expansion bearings shall be adjusted to permit the free movement of the span.

(d) Field Assembly: Members and components shall be accurately assembled as shown on the plans and any match marks shall be followed. The material shall be carefully handled so that no components will be bent, broken or otherwise damaged.

Hammering which will injure or distort the members is not permitted. Bearing surfaces and surfaces to be in permanent contact shall be cleaned before the members are assembled.

Cylindrical erection pins shall be 1/32 in (0.8 mm) larger than the nominal diameter of the holes.

Splices and field connections of main stress carrying members shall be made with a minimum of 50% of the holes filled and tightened with high strength bolts before the lifting system is released. The bolts shall be installed uniformly throughout the connection. Lateral stability must be maintained until the deck is placed.

The Contractor shall ensure that girders are stable throughout the erection process. The stage of completeness of the bolted connections shall be considered when evaluating the strength and stability of the steel during erection. For Closed Box and Tub Girders the Contractor shall ensure that the cross-section shape of each box is maintained during erection. Top lateral bracing shall be installed in tub girders prior to shipping and erection of the field pieces.

(e) Welded Connections: Unless otherwise shown on the plans or indicated by the special provisions, welding of structural steel shall be done in accordance with "ANSI/AASHTO/AWS D1.5 Bridge Welding Code."

The Contractor's welding and inspection procedures for each type of field weld and field tacking must be submitted to the Engineer on the form designated by the Department. All procedures must be approved by the Division of Materials Testing prior to any work and must be adhered to at all times.

Quality control is the responsibility of the Contractor. The Contractor must provide an AWS Certified Welding Inspector (CWI) in accordance with AWS D1.5. The CWI must be qualified and certified in accordance with the provisions of AWS QC1, *Standard for Qualification and Certification of Welding Inspectors.*

The CWI shall make visual inspection of all welds. The Contractor shall perform magnetic particle inspection, ultrasonic testing inspection, or radiographic testing

inspection of field welds when required in the plans or special provisions. Each test may be witnessed by an authorized representative of the Engineer.

Welds or sections of welds containing imperfections determined to be unacceptable by either the CWI or the Engineer shall be removed and re-welded by the Contractor at their expense. Welds so removed and replaced shall be re-inspected by the CWI. All costs for re-inspection or testing of such welds shall be borne by the Contractor.

(f) High Strength Bolted Connections: The assembly of structural connections using ASTM A 325/ A 325M or ASTM A 490/A 490M high-strength bolts shall be installed so as to develop the minimum required bolt tension specified in Table A. The Manufacturer's certified test report, including the rotational capacity test results, **must** accompany the fastener assemblies. Fastener assemblies delivered without the certified reports will be rejected.

Bolts, nuts and washers from each rotational-capacity lot shall be shipped in the same container. If there is only one production lot number for each size of nut and washer, the nuts and washers may be shipped in separate containers. Each container shall be permanently marked with the rotational-capacity lot number such that identification will be possible at any stage prior to installation. Assemblies of bolts, nuts and washers shall be installed from the same rotational-capacity lot. Pins, small parts and packages of bolts, washers, and nuts shall be shipped in boxes, crates, kegs, or barrels. A list and description of the contained materials shall be plainly marked on the outside of each shipping container.

Bolted Parts: All material within the grip of the bolt shall be steel; there shall be no compressible material, such as gaskets or insulation, within the grip. Bolted steel shall fit solidly together after the bolts are tensioned. The length of the bolts shall be such that the end of the bolt will be flush with or outside of the face of the nut when properly installed.

Surface Conditions: At the time of assembly, all connection surfaces, including surfaces adjacent to the bolt head and nut, shall be free of scale, except tight mill scale, and shall be free of dirt or other foreign material. Burrs that would prevent solid seating of the connected parts in the snug tight condition shall be removed.

Paint is permitted on the faying surface, including slip critical connections, only when shown on the plans. The faying surfaces of slip-critical connections shall meet the requirements of the following paragraphs, as applicable:

- Connections specified to have un-coated faying surfaces: any paint, including any inadvertent over spray, shall be excluded from areas closer than 1 bolt diameter, but not less than 1.0 in (25 mm), from the edge of any hole and all areas within the bolt pattern.
- Connections specified to have painted faying surfaces shall be blast cleaned and coated in accordance with the Contract, and shall not be assembled until the coating system has been properly cured.
- Connections specified to have galvanized faying surfaces shall be hot-dip galvanized in accordance with ASTM A 123/A 123M, and shall subsequently be roughened by means of hand wire brushing. Power wire brushing is not permitted.

Installation: At the pre-erection meeting, the Contractor shall inform the Engineer of its planned method of tensioning high strength bolts. Acceptable methods are: Turn-of-Nut, Calibrated Wrench or Direct Tension Indicator.

Fastener Assemblies: A "fastener assembly" is defined as a bolt, a nut, and a washer. Only complete fastener assemblies of appropriately assigned lot numbers shall be installed.

Fastener assemblies shall be stored in an area protected from dirt and moisture. Only as many fastener assemblies as are anticipated to be installed and tensioned during a work shift shall be taken from protected storage. Fastener assemblies not used shall be returned to protected storage at the end of the shift. Prior to installation, fastener assemblies shall not be cleaned of lubricant. Fastener assemblies which accumulate rust or dirt resulting from site conditions shall be cleaned, relubricated and tested for rotational-capacity prior to installation. All galvanized nuts shall be lubricated with a lubricant containing a visible dye. Plain bolts must be oily to the touch when delivered and installed. Lubricant shall be removed prior to painting.

All bolts shall have a hardened washer under the turned element (nut or bolt head). All hardened washers shall conform to the requirements of ASTM F 436/F 436M.

Where necessary, washers may be clipped on one side to a point not closer than 7/8 of the bolt diameter from the center of the washer. Circular and beveled washers, when used adjacent to direct tension indicator washers shall not be clipped. Direct tension indicator washers shall not be clipped.

Bolt Tension Measuring Device: The Contractor shall provide a calibrated bolt tension measuring device (a Skidmore-Wilhelm calibrator (Skidmore) or other acceptable bolt tension indicating device) at all times when, and at all locations where high-strength fasteners are being installed and tensioned. The tension measuring device (Skidmore) shall be calibrated by an approved testing agency at least annually. The Skidmore shall be used to perform the rotational-capacity test of the fastener assemblies. The Skidmore will also be used to substantiate (1) the suitability of the fastener assembly to satisfy the requirements of Table A, including lubrication as required, (2) calibration of the installation wrenches, if applicable, and (3) the understanding and proper use by the Contractor of the selected method of tensioning to be used.

Complete fastener assemblies shall be installed in properly aligned holes and then tensioned by the Turn-of-Nut, Calibrated Wrench or Direct Tension Indicator method to the minimum tension specified in Table A. Tensioning may be done by turning the bolt while the nut is prevented from rotating when it is impractical to turn the nut. Impact wrenches, if used, shall be of adequate capacity and sufficiently supplied with air to perform the required tensioning of each bolt in approximately 10 seconds.

Bolts shall be installed in all holes of the connection and the connection brought to a snug condition. Snug is defined as having all the plies of the connection in firm contact. Snugging shall progress systematically from the most rigid part of the connection to the free edges. The bolts of the connection shall then be tightened in a similar manner as necessary until the connection is properly tensioned.

Nuts shall be located, whenever practical, on the side of the connection which will not be visible from the traveled way.

Unless otherwise approved by the Engineer fastener assemblies shall be brought to full tension immediately following snugging.

Fully tensioned fastener assemblies shall not be reused. Retightening previously tensioned bolts which may have been loosened by the tensioning of adjacent bolts shall not be considered as reuse.

Rotational-Capacity Tests: In addition to the certified test reports, on site Rotational-capacity tests may be required by the Engineer. This test shall be

performed by the Contractor at the location where the fasteners are installed and tensioned. When performed in the field, the procedure shall conform to the requirements of ASTM A 325/ A 325M Appendix A-1.

Turn-of-Nut Installation Method: At the start of the work, the Contractor shall demonstrate that the procedure used by the bolting crew to develop a snug condition and to control the turns from a snug condition develops the tension required in Table A. To verify their procedure, the Contractor shall test a representative sample of not less than three complete fastener assemblies of each diameter, length and grade to be used in the work. This shall be performed at the start of work using a Skidmore. Periodic retesting shall be performed when ordered by the Engineer.

After snugging the connection, the applicable amount of rotation specified in Table B shall be achieved. During the tensioning operation there shall be no rotation of the part not turned by the wrench. Tensioning shall progress systematically from the most rigid part of the connection to its free edges.

Calibrated Wrench Installation Method: Calibrated wrench method may be used only when the installation wrenches are properly calibrated daily, or as determined by the Engineer. Standard torques determined from tables or from formulas which are assumed to relate torque to tension **shall not** be acceptable.

The Contractor shall demonstrate to the Engineer periodically that all equipment and wrenches are providing a torque which has been calibrated to produce the minimum tension specified in Table A. The installation procedures shall be verified periodically, as determined by the Engineer, for each bolt diameter, length and grade using the fastener assemblies that are being installed in the work. This verification testing shall be accomplished in a Skidmore by tensioning 3 complete fastener assemblies of each diameter, length and grade from those being installed with a hardened washer under the element turned.

When significant difference is noted in the surface condition of the bolts, threads, nuts or washers, as determined by the Engineer, wrenches shall be recalibrated. The Contractor shall verify during the installation of the assembled steel work that the wrench adjustment selected by the calibration does not produce a nut or bolt head rotation from snug greater than that permitted in Table B. If manual torque wrenches are used, nuts shall be turned in the tensioning direction when torque is measured.

When calibrated wrenches are used to install and tension bolts in a connection, bolts shall be installed with hardened washers under the element turned to tension the bolts. Once the connection has been snugged, the bolts shall be tensioned using the calibrated wrench. Tensioning shall progress systematically from the most rigid part of the connection to its free edges. A calibrated torque wrench shall be used to "touch up" previously tensioned bolts which may have been relaxed as a result of the subsequent tensioning of adjacent bolts until all bolts are tensioned to the prescribed amount.

Direct Tension Indicator Installation Method: When Direct Tension Indicators (DTIs) meeting the requirements of Section M.06 are used with high-strength bolts to indicate bolt tension, they shall be subjected to the verification testing described below and installed in accordance with the method specified below. Unless otherwise approved by the Engineer, the DTIs shall be installed under the head of the bolt and the nut turned to tension the bolt. The Manufacturer's recommendations shall be followed for the proper orientation of the DTI and additional washers, if any, required for the correct use of the DTI. Installation of a

DTI under the turned element may be permitted if a washer is used to separate the turned element from the DTI.

Verification: Verification testing shall be performed in a Skidmore. A special flat insert shall be used in place of the normal bolt head holding insert. Three verification tests shall be required for each combination of fastener assembly rotational-capacity lot, DTI lot, and DTI position relative to the turned element (bolt head or nut) to be used on the Project. The fastener assembly shall be installed in the tension-measuring device with the DTI located in the same position as in the work. The element intended to be stationary (bolt or nut) shall be restrained from rotation.

The verification tests shall be conducted in 2 stages. The bolt nut and DTI assembly shall be installed in a manner so that at least 3 and preferably not more than 5 threads are located between the bearing face of the nut and the bolt head. The bolt shall be tensioned first to the load equal to that listed in Table C under Verification Tension for the grade and diameter of the bolt. If an impact wrench is used, the tension developed using the impact wrench shall be no more than 2/3 of the required tension. Subsequently, a manual wrench shall be used to attain the required tension. The number of refusals of the 0.005 in (0.125 mm) tapered feeler gage in the spaces between the protrusions shall be recorded. The number of refusals for uncoated DTIs under the stationary or turned element, or coated DTIs under the stationary element, shall not exceed the number listed under Maximum Verification Refusals in Table C for the grade and diameter of bolt used. The maximum number of verification refusals for coated DTIs (galvanized, painted, or epoxy-coated), when used under the turned element, shall be no more than the number of spaces on the DTI less 1. The DTI lot shall be rejected if the number of refusals exceeds the values in the table or, for coated DTIs if the gage is refused in all spaces.

After the number of refusals is recorded at the verification load, the bolt shall be further tensioned until the 0.005 in (0.125 mm) feeler gage is refused at all the spaces and a visible gap exists in at least 1 space. The load at this condition shall be recorded and the bolt removed from the tension-measuring device. The nut shall be able to be run down by hand for the complete thread length of the bolt excluding thread run-out. If the nut cannot be run down for this thread length, the DTI lot shall be rejected unless the load recorded is less than 95% of the average load measured in the rotational capacity test of the fastener lot as specified previously in “Rotational-Capacity Tests.”

If the bolt is too short to be tested in the calibration device, the DTI lot shall be verified on a long bolt in a calibrator to determine the number of refusals at the verification tension listed in Table C. The number of refusals shall not exceed the values listed under maximum verification refusals in Table C. Another DTI from the same lot shall then be verified with the short bolt in a convenient hole in the work. The bolt shall be tensioned until the 0.005 in (0.125 mm) feeler gage is refused in all spaces and a visible gap exists in at least 1 space. The bolt shall then be removed from the tension-measuring device and the nut shall be able to be run down by hand for the complete thread length of the bolt excluding thread run-out. The DTI lot shall be rejected if the nut cannot be run down this thread length.

Installation: Installation of fastener assemblies using DTIs shall be performed in 2 stages. The stationary element shall be held against rotation during each stage of the installation. The connection shall be first snugged with bolts installed in all

holes of the connection and tensioned sufficiently to bring all the plies of the connection into firm contact. The number of spaces in which a 0.005 in (0.125 mm) feeler gage is refused in the DTI after snugging shall not exceed those listed under Maximum Verification Refusals in Table C. If the number exceeds the values in the table, the fastener assembly shall be removed and another DTI installed and snugged.

For uncoated DTIs used under a stationary or turned element and for coated DTIs used under a stationary element, the bolts shall be further tensioned until the number of refusals of the 0.005 in. (0.125 mm) feeler gage shall be equal or greater than the number listed under Minimum Installation Refusals in Table C. If the bolt is tensioned so that no visible gap in any space remains, the bolt and DTI shall be removed and replaced by a new properly tensioned bolt and DTI.

When coated DTIs (galvanized, painted or epoxy coated) are used under a turned element, the 0.005 in (0.125 mm) feeler gage shall be refused in all spaces.

Inspection: The Contractor shall provide all the material, equipment, tools and labor necessary for the inspection of the bolted connections. Access to the bolted parts and fastener assemblies, both before and after the fasteners are installed and tensioned, shall be provided.

The Contractor is responsible for Quality Control (QC). The Contractor shall review this Specification with its project personnel prior to performing the work. The Contractor shall verify the proper markings, surface conditions and storage of fastener assemblies. The Contractor shall inspect the faying surfaces of connections for compliance with the plans and specifications. The Contractor shall provide to the Engineer a copy of their written QC Report for each shift of the calibration or verification testing specified. This Report shall confirm that the selected procedure is properly used and that the fastener assemblies installed meet the tensions specified in Table A. The Contractor shall monitor the installation of fasteners in the work to assure that the selected procedure, as demonstrated in the initial testing to provide the specified tension, is routinely and properly applied.

The Contractor, in the presence of the Engineer, shall inspect the tensioned bolts using an inspection torque wrench, as defined below. If DTI devices are used, the appropriate feeler gauge will be used. Inspection tests shall be performed within 24 hours of bolt tensioning to prevent possible loss of lubrication or corrosion influence on tensioning torque.

The inspection torque wrench shall be calibrated as follows: Three (3) bolts of the same grade, size, and condition as those under inspection shall be placed individually in a device calibrated to measure bolt tension. This calibration operation shall be done at least once each inspection day. There shall be a washer under the part turned in torqueing each bolt. In the calibrated device, each bolt shall be tightened by any convenient means to the specified tension. The inspection wrench shall then be applied to the tensioned bolt to determine the torque required to turn the nut or head 5 degrees in the tightening direction. The average of the torque required for all 3 bolts shall be defined as the job-inspection torque.

Twenty-five percent (25%), but a minimum of 2, of the tensioned bolts shall be selected by the Engineer for inspection in each connection. (The Engineer may reduce the number of bolts tested at a connection to 10% based on the Contractor's past performance and splice location.) The job-inspection torque shall then be applied to each selected assembly with the inspection torque wrench turned in the tightening direction. If all inspected bolt heads or nuts do not turn, the bolts in the connection

shall be considered to be properly tensioned. If the torque turns 1 or more bolt heads or nuts, the job-inspection torque shall then be applied to **all** bolts in the connection or to the satisfaction of the Engineer. Any bolt whose head or nut turns shall be re-tensioned and re-inspected. The Contractor may, however, re-tension all the bolts in the connection with the inspection torque wrench and resubmit it for inspection, so long as the bolts are not over-tensioned or damaged by this action.

(g) Field Corrections and Misfits: Reaming of bolt holes during erection shall be permitted only with approval of the Engineer. No excessive forces shall be applied to any member to provide for proper alignment of the bolt holes.

The correction of minor misfits involving minor amounts of reaming, cutting, grinding and chipping shall be considered a legitimate part of the erection. However, any error in the shop fabrication or deformation resulting from handling and transportation may be cause for rejection. The Contractor shall be responsible for all misfits, errors and damage and shall make the necessary corrections and replacements.

TABLE A (English)
Minimum Bolt Tension in kips*

Bolt Size (Inches)	ASTM A 325	ASTM A 490
5/8	19	24
3/4	28	35
7/8	39	49
1	51	64
1-1/8	56	80
1-1/4	71	102
1-3/8	85	121
1-1/2	103	148

*Equal to 70% of specified minimum tensile strength of bolts (as specified in ASTM Specifications for tests of full-size A 325 and A 490 bolts with UNC threads, loaded in axial tension) rounded to the nearest kip.

TABLE A (Metric)
Minimum Bolt Tension in Kilonewtons*

Bolt Size	ASTM A 325M	ASTM A 490M
M16	91	114
M20	142	179
M22	176	221
M24	205	257
M27	267	334
M30	326	408
M36	475	595

*Equal to 70% of specified minimum tensile strength of bolts (as specified in ASTM Specifications for tests of full-size A 325M and A 490M bolts with metric coarse threads series ANSI B1.13M, loaded in axial tension) rounded to the nearest kilonewton.

TABLE B (English and Metric)
Nut Rotation from the Snug Condition
Geometry[a,b,c] of Outer Faces of Bolted Parts

Bolt Length (measured from underside of head to end of bolt)	Both Faces Normal to Bolt Axis	One Face Normal to Bolt Axis and Other Face Sloped Not More Than 1:20, Bevel Washer Not Used	Both Faces Sloped Not More Than 1:20 From Normal to Bolt Axis, Bevel Washer Not Used
Up to and including 4 diameters	1/3 turn	1/2 turn	2/3 turn
Over 4 diameters but not exceeding 8 diameters	1/2 turn	2/3 turn	5/6 turn
Over 8 diameters but not exceeding 12 diameters	2/3 turn	5/6 turn	1 turn

(a) Nut rotation, as used in Table B, shall be taken as relative to the bolt, regardless of the element (nut or bolt) being turned. For bolts installed by 1/2 turn and less, the tolerance should be plus or minus 30 degrees; for bolts installed by 2/3 turn and more, the tolerance should be plus or minus 45 degrees.
To determine the nut rotation for installation and inspection of the fasteners, the nut and the end of the bolt or the head of the bolt and the adjacent steel shall be match marked.

(b) The values, given in Table B, shall be applicable only to connections in which all material within grip of the bolt is steel.

(c) No research work has been performed by the Research Council on Riveted and Bolted Structural Joints to establish the turn-of-nut procedure when bolt lengths exceed 12 diameters. For situations in which the bolt length, measured from the underside of the head to the end of the bolt, exceeds 12 diameters, the required rotation shall be determined by actual tests in a suitable tension device simulating the actual conditions.

TABLE C (English)

Bolt Dia. (in.)	Verification Tension		Maximum Verification Refusals		DTI Spaces		Minimum Installation Refusals	
	A325	A490	325	490	325	490	325	490
5/8	20	25	1	2	4	5	2	3
3/4	29	37	2	2	5	6	3	3
7/8	41	51	2	2	5	6	3	3
1	54	67	2	3	6	7	3	4
1-1/8	59	84	2	3	6	7	3	4
1-1/4	75	107	3	3	7	8	4	4
1-3/8	89	127	3	3	7	8	4	4
1-1/2	108	155	3	4	8	9	4	5

TABLE C (Metric)

Bolt Dia. (in.)	Verification Tension		Maximum Verification Refusals		DTI Spaces		Minimum Installation Refusals	
	A325	A490	Type 8.8	Type 10.9	Type 8.8	Type 10.9	Type 8.8	Type 10.9
M16	96	120	1	1	4	4	2	2
M20	149	188	2	2	5	6	3	3
M22	185	232	2	2	5	6	3	3
M24	215	270	2	2	5	6	3	3
M27	280	351	2	3	6	7	3	4
M30	342	428	3	3	7	8	4	4
M36	499	625	3	4	8	9	4	5

6.03.04—Method of Measurement: Payment under this item will be at the Contract lump sum price per each complete bridge structure or shall be based on the net weight (mass) of metal in the fabricated structure, whichever method appears on the bid proposal form.

When payment is on a lump sum basis, the work, including anchor bolts, steel bearings and plates will not be measured for payment. Bearing plates welded to the girder are included in the price of the structural steel and bearing plates bonded to the bearings are included in the price of the bearing.

When payment is based on the net weight (mass) of metal in the fabricated structure, it shall be computed as described below.

The weight (mass) of the metal works to be paid for under the item of structural steel shall be computed on the basis of the net finished dimensions of the parts as shown on the shop drawings, deducting for copes, cuts, clips and all open holes, except bolt holes, and on the following basis:

1. The weights (masses) of rolled shapes shall be computed on the basis of their nominal weights (masses) per foot (meter), as shown in the shop drawings or listed in handbooks.

The weight (mass) of plates shall be computed on the basis of the nominal weight (mass) for their width and thickness as shown on the shop drawings.

2. The weight (mass) of temporary erection bolts, shop and field paint, galvanization, boxes, crates and other containers used for shipping, and materials used for supporting members during transportation and erection, shall not be included.

3. The weight (mass) of all high strength bolts, nuts, and washers shall be included on the basis of the following weights (masses):

Weight per 100 pieces			
English units		Metric units	
Nominal diameter of H.S. bolt (inch)	**Bolthead, nut, 1 washer and stick through (lbs)**	**Nominal diameter of H.S. bolt (mm)**	**Bolthead, nut, 1 washer and stick through (kg)**
1/2	22	16	17
5/8	33	20	26
3/4	55	22	39
7/8	84	24	50
1	120	27	60
1-1/8	169	30	73
1-1/4	216	36	122

4. The weight (mass) of weld metal shall be computed on the basis of the theoretical volume from plan dimensions of the welds.

Size of fillet in Inches (mm)	**Weight of weld in pounds per foot (kg per meter)**	
3/16 (5)	0.08	(0.119)
1/4 (6)	0.14	(0.208)
5/16 (8)	0.22	(0.327)
3/8 (9.5)	0.30	(0.446)
1/2 (13)	0.55	(0.818)
5/8 (16)	0.80	(1.190)
3/4 (19)	1.10	(1.636)
7/8 (22)	1.50	(2.231)
1 (25)	2.00	(2.974)

5. The weight (mass) of steel shims, filler plates and anchor bolts shall be measured for payment.

6.03.05—Basis of Payment: The structural steel, incorporated in the completed and accepted structure, will be paid for at the Contract lump sum price for "Structural Steel (Site No.)," or at the Contract unit price per hundredweight (kilogram) for "Structural Steel," whichever is indicated in the Contract.

Payment for either method shall be for structural steel, complete in place, which price shall include quality control, furnishing, fabricating, transporting, storage and handling, erecting, welding, surface preparation and all materials including fastener assemblies, steel bearing assemblies and anchor bolts, equipment, tools and labor incidental thereto.

The cost of the raw material is included in the lump sum payment for “Structural Steel (Site No.).” All remaining work including, but not limited to, preparation of shop drawings,

fabricating, transporting, storage and handling, erecting, surface preparation and all materials, equipment, tools and labor incidental thereto, will be paid for under “Structural Steel (Site No.).”

No direct payment will be made for setting anchor bolts, preparing bearing areas, furnishing and placing materials under bearings. No direct payment will be made for non destructive testing as shown on the plans.

Pay Item	Pay Unit
Structural Steel (Site No.)	l.s. (l.s.)
Structural Steel	cwt. (kg)

CONNECTICUT
SUPPLEMENTAL SPECIFICATION
SECTION 6.12
CONCRETE CYLINDER CURING BOX

Delete the entire section and replace it with the following:

6.12.01—Description: This item shall consist of furnishing a box for curing concrete test cylinders. The box shall be commercially available and manufactured specifically for curing concrete test cylinders. The box will remain the property of the Contractor at the conclusion of the project. The box shall be delivered to a location on the Project as directed by the Engineer.

6.12.02—Materials: A catalog cut listing detailed specifications of the box and operating instructions from the manufacturer must be submitted to the Engineer. The box and its components shall be constructed of non-corroding materials and shall be capable of storing a minimum of 18 test cylinders, 6 in x 12 in (152 mm x 305 mm) stored vertically with the lid closed. The lid must be watertight when closed and hinged in the back with security latches on the front that can be padlocked. The box must be capable of holding water to a maximum level of 1 in above test cylinders placed in the box vertically. A drain hole must be provided in a wall of the box to allow manual drainage of the water that exceeds this level. A drain hole must also be provided at the bottom of the box so that it can be manually emptied. The temperature of the water must be controlled by heating and cooling device capable of maintaining the temperature of the water within a range of 60 to 80º F, +/- 2ºF (15.5 to 26.7ºC, +/- 1ºC) within an outside ambient air temperature range of -10 to 120º F (-23.3 to 49ºC). The heating and cooling device must be positioned to allow free circulation of air and water around the cylinders and be rated at 120 volts and 15 amps. A rack must be provided within the box to support the cylinders above the pool of temperature controlled water. The device must be thermostatically controlled with a digital readout that is capable of displaying the high/low water temperature within the box since the last reading was taken.

6.12.03—Construction Methods: The Contractor shall maintain the curing box in working order and shall provide all necessary electrical service and water so that the curing box can be used properly during the entire course of the project. Any curing box that is not operating properly, as determined by the Engineer, shall be replaced within 24 hours by the Contractor at no expense to the State. The Engineer reserves the right to prohibit placement of fresh concrete on the project until a curing box acceptable to the Engineer is operational on the project site.

6.12.04—Method of Measurement: The furnishing of the concrete test cylinder curing box will be measured for payment by the number of boxes delivered by the Contractor and accepted by the Engineer.

6.12.05—Basis of Payment: This item will be paid for at the Contract unit price each for “Concrete Cylinder Curing Box” ordered and accepted on the Project, which price shall include all submittals, material, tools, equipment, and labor incidental thereto. The price shall also include all maintenance and operating costs related to the curing box for the duration of the Project.

Pay Item	Pay Unit
Concrete Cylinder Curing Box	ea. (ea.)

CONNECTICUT
SUPPLEMENTAL SPECIFICATION
SECTION 6.51
CULVERTS

6.51.02—Materials:

Delete the 2nd paragraph, “Pipes of the type indicated ... of Article M.02.01.” *and insert the following paragraph:*

“ Pipes of the type indicated on the plans and joint sealant shall meet the requirements of Article M.08.01. Bedding material shall meet the requirements of Article M.08.03. Granular fill shall meet the requirements of Article M.02.01.”

6.51.03—Construction Methods:

In the 8th paragraph replace “gravel fill” *with* “granular fill.”

Delete the 13th paragraph, “Bituminous fiber and … as the pipe.”

6.51.04—Methods of Measurement:

In the 7th paragraph replace “Gravel Fill” *with* “Granular Fill.”

6.51.05—Basis of Payment:

In the 8th paragraph replace “Gravel Fill” *with* “Granular Fill.”

CONNECTICUT
SUPPLEMENTAL SPECIFICATION
SECTION 7.01
DRILLED SHAFTS

Add the following section:

SECTION 7.01
DRILLED SHAFTS

7.01.01—Description
7.01.02—Materials
7.01.03—Construction Methods
7.01.04—Method of Measurement
7.01.05—Basis of Payment

7.01.01—Description: This work shall consist of all labor, materials, equipment and services necessary to complete the Drilled Shaft installation in accordance with the Contract documents. Drilled shafts shall substantially consist of reinforced or unreinforced concrete.

7.01.02—Materials: Drilled Shafts shall be composed of the following materials:

1. **Portland Cement Concrete:** Concrete used in the construction of the shaft shall conform to the plans, Section M.03, and the following:
   (a) The concrete shall have a minimum initial slump of 8 in (200 mm).
   (b) The concrete mix shall maintain a slump of no less than 4 in (100 mm) for a minimum of 3 hours beyond the expected time for placement of concrete and removal of temporary casing (if used), as demonstrated by trial mixes and physical tests of slump loss. The trial mix and physical tests (slump loss tests) shall be conducted using concrete mix and ambient air temperatures anticipated during concrete placement.
   (c) All admixtures, if approved for use, shall be adjusted for the conditions encountered on the job so as to conform to the slump loss requirements within this specification and not to adversely affect the timing of, taking of or interpretation of any Nondestructive Testing that may be called for in the Contract.
   (d) Coarse aggregate shall conform to Article M.01.01, No. 8 Gradation.
2. **Reinforcing Steel**: Reinforcing steel used in construction of the shaft shall conform to Article M.06.01.
3. **Access Tubes:** Access tubes for cross-hole acoustic logging shall consist of Schedule 40 steel pipe conforming to ASTM A 53, Grade A or B, Type E, F, or S. The inside diameter shall be at least 1.5 in (38 mm). All access tubes shall have a round, regular inside surface free of defects and obstructions, including all pipe joints, in order to permit the free, unobstructed passage of probes to the bottoms of the tubes. The access tubes shall be watertight, free from corrosion and free of deleterious material on the outside that can prevent bonding with the concrete. All access tubes shall be fitted with watertight caps on the bottom and top.
4. **Grout:** Grout used for filling Access Tubes shall conform to the requirements of Article M.03.05. The grout shall have strength properties equivalent to or better than those of the drilled shaft concrete.
5. **Permanent Casing:** Steel casing shall meet the requirements of ASTM A36 or A252 Grade 2 unless otherwise specified on the plans. Casings shall be smooth, clean, watertight, and of ample strength to withstand both handling and installation, and the

pressure of concrete and the surrounding earth materials. The outside diameter of casing shall not be less than the specified diameter of shaft.

7.01.03—Construction Methods:

1. **Qualifications of Drilled Shaft Contractor and Submittals:** The Contractor performing the work described in this specification shall have installed drilled shafts of both diameter and length similar to those shown on the plans for a minimum of 3 years prior to the bid date for this Project. The Contractor shall submit a list of projects meeting these criteria. The list of projects shall contain names and phone numbers of owner's representatives who can verify the Contractors' participation on those projects.

   As early as possible, and no later than 30 days prior to constructing drilled shafts, the Contractor shall submit an Installation Plan for review by the Engineer. This Plan shall provide information on the following:

   (a) A list identifying the on-site supervisor(s) and drill operator(s) for approval by the Engineer. The on-site supervisor(s) shall have a minimum of 2 years' experience in supervising the construction of drilled shafts of a diameter and length similar to those shown on the plans. The drill operator(s) shall have a minimum of 1 year experience in drilling for the construction of drilled shafts of a diameter and length similar to those shown on the plans. The list shall contain a summary of each individual's experience.

   Should the Contractor elect to change personnel during construction of the shafts, the same approval process will need to be completed for the new personnel prior to working on the Project. The Contractor shall not be compensated for any delays resulting from changing of personnel.

   (b) List of proposed equipment to be used, including cranes, drills, augers, bailing buckets, final cleaning equipment, desanding equipment, slurry pumps, core sampling equipment, tremies or concrete pumps, casing and any other equipment required for construction of the shafts.

   (c) Details of overall construction operation sequence and the sequence of shaft construction in bents or groups.

   (d) Details of shaft excavation methods.

   (e) When the use of slurry is anticipated, details of the mix design and its suitability for the subsurface conditions at the Project site, mixing and storage methods, maintenance methods, and disposal procedures.

   (f) Details of methods to clean the shaft excavation.

   (g) Details of reinforcement placement, including support and centralization methods.

   (h) Details of concrete mix design and test results of both a trial mix and a slump loss test. The tests shall be conducted by an approved testing laboratory using approved methods to demonstrate that the concrete meets slump loss requirements.

   (i) Details of concrete placement, including proposed operational procedures for free fall, tremie or pumping methods, proposed concreting log form and computations for time duration of shaft pour estimates.

   (j) Details of casing installation and removal methods. If welding of casing is proposed, submit the welding procedure. All welding shall be done in accordance with the current AWS Structural Welding Code.

   (k) Details of methods for removal of obstructions. Obstructions for which the Contractor shall provide details of methods for removal include, but are not necessarily limited to, boulders, concrete, riprap, steel, timber and miscellaneous debris.

   (l) Details for any monitoring plan as called for in the Contract documents.

   The Engineer will evaluate the drilled shaft Installation Plan for conformance with the Contract documents and will then notify the Contractor of any additional information

required or changes necessary to meet the Contract requirements. All procedural approvals given by the Engineer shall be subject to trial in the field and shall not relieve the Contractor of the responsibility to satisfactorily complete the work as detailed in the plans and specifications. The Contractor shall not commence construction of the drilled shafts until the Engineer has approved the Installation Plan.

If integrity or load testing of the drilled shafts is called for, this submittal shall be developed in coordination with and submitted concurrently with working drawing submittals, as required in the testing specifications.

All submittals shall comply with the working drawing submittal requirements as outlined in Article 1.05.02.

2. **Trial Drilled Shaft Installation and Load Testing:** When called for in the contract, the Contractor shall demonstrate the adequacy of the proposed methods, techniques and equipment by successfully constructing a trial drilled shaft in accordance with these specifications. This trial drilled shaft shall be positioned away from production shafts in the location shown on the plans or as directed by the Engineer. The trial shaft shall be drilled to the maximum depth shown in the plans. Failure by the Contractor to demonstrate to the Engineer the adequacy of methods and equipment shall be reason for the Engineer to require alterations in equipment or methods by the Contractor to eliminate unsatisfactory results. Any additional trial drilled shaft required to demonstrate the adequacy of altered methods or construction equipment shall be at the Contractor's expense. Once approval has been given to construct production shafts, no changes will be permitted in the personnel, materials, methods or equipment used to construct the satisfactory trial drilled shaft without written approval of the Engineer.

   Unless otherwise shown in the Contract documents, the trial drilled shaft will have reinforcing bars, access tubes and concrete placed utilizing the same materials and methods of construction to be used during construction of the production drilled shafts. The trial drilled shaft shall be cut off 2 feet below finished grade and left in place. The disturbed area(s) at the site(s) of the trial drilled shaft(s) shall be restored as nearly as practical to original condition.

   Should the plans call for load testing of the trial drilled shaft, all necessary loading apparatus, instrumentation and other equipment required for performing the load test will be specified and paid for under a separate item.

   All trial drilled shaft(s) and load test(s) shall be completed and accepted by the Engineer prior to construction of any production drilled shafts. In the event there is more than one trial drilled shaft and load test, the Engineer may allow the Contractor to begin construction of some of the production drilled shafts.

3. **Protection of Existing Structures:** The Contractor shall control drilled shaft operations to prevent damage to existing structures and utilities, in accordance with Articles 1.07.09 and 1.07.13. Preventive measures shall include, but are not limited to: selecting construction methods and procedures to prevent caving of the shaft excavation; and monitoring and controlling the vibrations from construction activities such as the driving of casing or sheeting, drilling of the shaft, or from blasting, if permitted.

   If monitoring is called for in the Contract documents, a preconstruction survey of existing facilities shall be performed to establish baseline data, including ambient vibration levels and existing structural defects. In general, monumented survey points shall be established on structures which are located within a distance of either 10 shaft diameters or the estimated shaft depth, whichever is greater. These points shall be monitored by the Contractor for vertical and lateral movement in an approved manner to the accuracy determined by the Engineer.

   When deformations exceed the predetermined amount included in the plans, the Contractor shall immediately stop work and, if directed by the Engineer, backfill the

excavated hole. The Contractor shall be responsible for selecting and using equipment and procedures that keep deformations of existing structures within specified levels.

When vibrations are to be monitored, the Contractor will be directed to engage the services of a professional vibrations consultant to monitor and record vibration levels during drilled shaft construction. In general, vibration monitoring equipment shall be capable of detecting velocities of 0.1 in/sec (2.5 mm/sec) or less. When vibration levels exceed established tolerable levels the Contractor shall immediately stop work and take whatever measures are necessary to reduce vibration levels to below tolerable levels. All costs related to vibration monitoring required in the Contract documents shall be included in the bid price for the Drilled Shaft item.

4. **Construction Sequence:** Excavation to footing elevation shall be completed before shaft construction begins unless otherwise noted in the Contract documents or approved by the Engineer. Any disturbance at or below the footing area caused by shaft installation shall be repaired by the Contractor prior to the footing construction.

   When drilled shafts are to be installed in conjunction with embankment placement, the Contractor shall construct drilled shafts after the placement of fills, unless shown otherwise in the Contract documents or approved by the Engineer.

   Drilled shafts, constructed prior to the completion of the fills, shall not be capped until the fills have been placed as near to final grade as possible, leaving only the necessary workroom for construction of the caps.

5. **Exploration Test Borings:** As early as possible, the Contractor shall take soil samples or rock cores, where shown on the plans or as directed by the Engineer, to determine the character of the material directly below the completed shaft excavation. The soil samples shall be extracted with a split spoon sampler or undisturbed sample tube. The rock cores shall be cut with an approved triple tube core barrel to a minimum of 10 ft (3 m) below the bottom of the drilled shaft excavation before the excavation is made. The Engineer may require the depth of coring be extended up to a total depth of 20 ft (6 m). Rock core and standard penetration test samples shall be measured, visually identified and described on the Contractor's log. The samples shall be placed in suitable containers, identified by shaft location, elevation, and Project number and shall be delivered with the Contractor's field log to the Engineer within 24 hours after each boring exploration is complete. The Engineer will inspect the samples and log to determine the final depth of required excavation based on evaluation of the material's suitability. The Contractor shall not start shaft drilling or construction of the shafts until the Engineer has determined the final depth of required excavation. Two (2) copies of the Contractor's final typed log shall be furnished to the Engineer within 7 calendar days upon completion of the borings. The logs shall contain specific information about the drilling equipment and tools used and rate of hole advancement, as well as descriptions of soil, rock, obstructions, and water encountered. The Contractor shall supply a suitable, secure site for storage of all soil and rock samples on the Project site. At no time shall the soil or rock core samples be taken off the Project site without approval from the Engineer.

6. **General Methods and Equipment:** The Contractor shall perform the excavations required for shafts through whatever materials are encountered, to the dimensions and elevations shown in the plans or otherwise required by the Contract documents. The Contractor's methods and equipment shall be suitable for the intended purpose and materials encountered. The permanent casing method shall be used only at locations shown on the plans or when authorized by the Engineer in writing. Blasting shall only be permitted if specifically stated on the plans or authorized in writing by the Engineer.

7. **Uncased Construction Method:** This method consists of using water or slurry (mineral or polymer) to maintain stability of the borehole perimeter while advancing the excavation to final depth, placing the reinforcing cage, and concreting the shaft. Where drilled shafts are

located in open water areas, exterior casings shall be extended from above the anticipated high water elevation into the ground to protect the shaft concrete from water action during placement and curing of the concrete. The exterior casing shall be installed in a manner that will produce a positive seal at the bottom of the casing so that no piping of water or other materials occurs into or from the shaft excavation.

8. **Casing Construction Method:** The casing method may be used either where shown on the plans or at sites where uncased construction methods are inadequate to prevent hole caving or excessive deformation of the hole. In this method, the casing may be either placed in a predrilled hole or advanced through the ground by twisting, driving or vibration before being cleaned out.
9. **Excavation and Drilling Equipment:** The Contractor's excavation and drilling equipment shall have adequate capacity, including power, torque and down thrust to excavate a hole of the maximum diameter and to a depth of 20% beyond the depths shown on the plans.

   The excavation and overreaming tools shall be of adequate design, size and strength to perform the work shown in the plans or described herein. When the material encountered cannot be drilled using conventional earth augers with soil or rock teeth, drill buckets, grooving tools, or underreaming tools, the Contractor shall provide special drilling equipment, including but not limited to: rock core barrels, rock tools, air tools, blasting materials, and other equipment as necessary to construct the shaft excavation to the size and depth required. Approval of the Engineer is required before excavation by blasting is permitted.
10. **Excavation:** Shaft excavations shall be made at locations and to the top of shaft elevations, estimated bottom of shaft elevations, shaft geometry and dimensions shown in the Contract documents. The Contractor shall extend drilled shaft tip (base) elevations when the Engineer determines that the material encountered during excavation is unsuitable or differs from that anticipated in the design of the drilled shaft.

    The Contractor shall maintain a construction method log during shaft excavation. The log shall contain information such as: the description and approximate top and bottom elevation of each soil or rock material encountered, seepage or ground water, and remarks, including a description of the tools and drill rigs used and any changes necessitated by changing ground conditions.

    Excavated materials that are removed from shaft excavations shall be disposed of by the Contractor in accordance with the applicable specifications for disposal of excavated materials and in conformance with Section 1.10.

    The Contractor shall not permit workers to enter the shaft excavation for any reason unless both a suitable casing has been installed and the water level has been lowered and stabilized below the level to be occupied, and adequate safety equipment and procedures have been provided to workers entering the excavation. Any placement of workers within the shaft excavation shall be in conformance with OSHA regulations and industry standards.
11. **Drilled Shaft Earth Excavation:** Drilled shaft earth excavation is excavation accomplished with conventional tools such as augers and drilling buckets attached to drilling equipment of the size, power, torque, and down thrust (crowd) as proposed by the Contractor in the Installation Plan that has been approved for use by the Engineer, or successful construction of a trial drilled shaft. Earth excavation may include, but not necessarily be limited to, clay, silt, sand, gravel, cobbles, boulders, weathered rock, and miscellaneous fill.
12. **Drilled Shaft Rock Excavation:** Drilled shaft rock excavation is excavation of competent rock, accomplished with conventional rock drilling tools, such as core barrels attached to drilling equipment of the size, power, torque, and down thrust (crowd) as proposed by the Contractor in the approved Installation Plan, or successful construction of a trial drilled shaft. Top of competent rock is as defined on the Contract drawings.

13. **Obstruction:** When obstructions are encountered, the Contractor shall notify the Engineer immediately. Obstructions are defined as impenetrable objects that
    (a) cannot be removed or excavated using conventional augers fitted with soil or rock teeth, underreaming tools, or drilling buckets.
    (b) cause a significant decrease in the rate of excavation advancement, relative to the rate of advancement for the rest of the shaft excavation within the particular strata where the obstruction is located, if removed using the same techniques and equipment previously used successfully to excavate the shaft.

    The Engineer will be the sole judge of the significance of any reduced rate of shaft advancement and the classification of obstruction excavation. The Engineer will be present to evaluate the occurrence of obstructions, to authorize, and to approve the designation of such. Sloping bedrock or higher than anticipated bedrock shall not be considered obstruction excavation. Shallow obstructions are those obstructions located within 5 ft (1.5 m) of the top level of the shaft. Shallow obstructions at shaft locations shall be removed at the expense of the Contractor.

    The Contractor shall remove all subsurface obstructions at drilled shaft locations. Such obstructions may include man-made materials, such as concrete foundations, and natural materials, such as boulders. Subsurface obstruction removal special procedures/tools may include but are not limited to: chisels, boulder breakers, core barrels, down the hole hammers, air tools, hand excavation, temporary casing, and increasing the hole diameter. Blasting shall not be permitted unless specifically approved in writing by the Engineer.
14. **Lost Tools:** Drilling tools that are lost in the excavation shall not be considered obstructions and shall be promptly removed by the Contractor without compensation. All costs due to lost tool removal shall be borne by the Contractor including, but not limited to, costs associated with the repair of hole degradation due to removal operations or excessive time that the hole remains open.
15. **Casing:** Casings shall be steel, smooth, clean, watertight, and of ample strength to withstand both handling and installation and the pressure of both concrete and the surrounding earth materials. The outside diameter of casing shall not be less than the specified diameter of shaft, and the outside diameter of any excavation made below the casing shall not be less than the specified diameter of the shaft. No extra compensation will be allowed for concrete required to fill an oversized casing or oversized excavation. All casings, except permanent casings, shall be removed from shaft excavations. Any length of permanent casing installed below the shaft cutoff elevation, shall remain in place.

    When the shaft extends above ground or through a body of water, the portion exposed above ground or through the water may be formed with removable casing except when permanent casing is specified. Removable casing shall be stripped from the shaft in a manner that will not damage the concrete. Casings can be removed when the concrete has attained sufficient strength provided: curing of the concrete is continued for a 72-hour period; the shaft concrete is not exposed to salt water or moving water for 7 days; and the concrete reaches a compressive strength of at least 2500 psi (17,235 kPa) as determined from concrete cylinder breaks.
16. **Temporary Casing:** All subsurface casing shall be considered temporary unless specifically shown as permanent casing in the Contract documents. The Contractor shall be required to remove temporary casing before or immediately after completion of concreting the drilled shaft. Casing shall never be pulled after the concrete begins to set due to probable entrapment of drilling fluid in the shaft concrete and probable separation of the concrete within the shaft.

    If the Contractor elects to remove a casing and substitute a longer or larger-diameter casing through caving soils, the excavation shall either be stabilized with slurry or backfilled

before the new casing is installed. Other methods, as approved by the Engineer, may be used to control the stability of the excavation and protect the integrity of the foundation materials.

Before the casing is withdrawn, the level of fresh concrete in the casing shall be a minimum of 5 ft (1.5 m) above either the hydrostatic water level in the formation or the level of drilling fluid in the annular space behind the casing, whichever is higher. As the casing is withdrawn, care shall be exercised to maintain an adequate level of concrete within the casing so that fluid trapped behind the casing is displaced upward and discharged at the ground surface without contaminating or displacing the shaft concrete.

Temporary casings that become bound or fouled during shaft construction and cannot be practically removed shall constitute a defect in the drilled shaft. The Contractor shall be responsible to improve such defective shafts to the satisfaction of the Engineer. Improvement may consist of, but not be limited to, removing the shaft concrete and extending the shaft deeper to compensate for loss of frictional capacity in the cased zone, providing straddle shafts to compensate for capacity loss, grouting around the exterior of the shaft, or providing a replacement shaft. All corrective measures including redesign of footings caused by defective shafts shall be done to the satisfaction of the Engineer by the Contractor without either compensation or an extension of Contract time. In addition, no compensation will be paid for casing remaining in place.

17. **Permanent Casing:** Permanent casing shall be used where specified by the Contract documents. The casing shall be continuous between top and bottom elevations as shown in the plans. After installation is complete, the permanent casing shall be cut off at the prescribed elevation.

    In cases where special temporary casings are shown on the plans or authorized in writing by the Engineer to be used in conjunction with permanent casing, the Contractor shall maintain both alignment of the temporary casing with the permanent casing and a positive, watertight seal between the two casings during excavation and concreting operations.

    Permanent casing shall maintain intimate contact with the surrounding earth after installation. Use of an oversized hole or temporary casing outside the permanent casing beneath the ground surface will not be allowed without written permission of the Engineer. Should an oversized hole or temporary casing outside the permanent casing beneath the ground surface be allowed by the Engineer, grouting of the exterior annular space shall be provided by the Contractor to create intimate contact between the casing and the surrounding ground. The grouting shall extend from the bottom of the annular space to an elevation determined by the Engineer. No compensation will be paid to the Contractor for grouting of the exterior annular space.

18. **Slurry:** Mineral or polymer slurries shall be employed when slurry is used in the drilling process unless other drilling fluids are approved in writing by the Engineer. Mineral slurry shall have both a mineral grain size that will remain in suspension and sufficient viscosity and gel characteristics to transport excavated material to a suitable screening system. The percentage and specific gravity of the material used to make the mineral suspension shall be sufficient to maintain the stability of the excavation and to allow proper concrete placement.

    During construction, the level of the slurry shall be maintained at a height sufficient to prevent caving of the hole. The slurry head shall remain above the piezometric head of the groundwater. This includes initial drilling of the borehole down to the piezometric level. Slurry shall be introduced when the depth of the borehole is still above the piezometric level, not after the inflow of water can be detected and sloughing has begun. In the event of a sudden significant loss of slurry to the hole, the construction of that foundation shall be stopped until either a method to stop slurry loss or an alternate construction procedure has been approved by the Engineer.

Mineral slurry shall be premixed thoroughly with clean fresh water and adequate time (as prescribed by the mineral manufacturer) allotted for hydration prior to introduction into the shaft excavation. Slurry tanks of adequate capacity shall be required for slurry circulation, storage, and treatment. No excavated slurry pits will be allowed in lieu of slurry tanks without the written permission of the Engineer. Desanding equipment shall be provided by the Contractor as necessary to control slurry sand content to less than 4% by volume at any point in the borehole at the time the slurry is introduced, including situations in which temporary casing will be used. The Contractor shall take all steps necessary to prevent the slurry from "setting up" in the shaft. Such methods may include but are not limited to: agitation, circulation and adjusting the properties of the slurry. Disposal of all slurry shall be done off site in suitable areas by the Contractor. Disposal of the slurry shall also be in conformance with Section 1.10.

Control tests using suitable apparatus shall be carried out on the mineral slurry by the Contractor to determine density, viscosity and pH. An acceptable range of values for mineral slurry physical properties is shown in Table 7.01-1:

TABLE 7.01-1, MINERAL SLURRY PROPERTIES
(Sodium Bentonite or Attapulgite in Fresh Water)

	Acceptable Range of Values		
Property	**At Time of Slurry Introduction**	**In Hole at Time of Concreting**	**Test Method**
Density - pcf (kN/m^2)	64.3* - 69.1* (10.1* - 10.8*)	64.3* - 75.0* (10.1* - 11.8*)	Density Balance
Viscosity - sec./quart (sec./liter)	28 – 45 (26 – 43)	28 – 45 (26 – 43)	Marsh Funnel
pH	8 - 11	8 - 11	pH paper, pH meter

* Increase by 2 pcf (0.3 kN/m^2) in salt water

Notes:
(a) Tests shall be performed when the slurry temperature is above 40° F (4.5° C).
(b) If desanding is required, sand content shall not exceed 4% (by volume) at any point in the borehole as determined by the American Petroleum Institute sand content test when the slurry is introduced.

Tests to determine density, viscosity and pH value shall be performed during the shaft excavation to establish a consistent working pattern. A minimum of 4 sets of tests shall be made during the first 8 hours of slurry use. When the results show consistent behavior, the testing frequency may be decreased to 1 set every 4 hours of slurry use.

If the Contractor proposes to use polymer slurry, either natural or synthetic, the product is subject to approval by the Engineer. Slurry properties at the time of mixing and at the time of concreting must be in conformance with the written recommendations of the manufacturer. However, whatever product is used, the sand content at the base of the drilled shaft excavation shall not exceed 1% when measured by Method API 13B-1, Section 5, immediately prior to concreting.

If the Contractor proposes to use blended mineral-polymer slurry, the Contractor shall submit a detailed report specific to the Project prepared and signed by a qualified slurry consultant describing the slurry materials, the mix proportions, mixing methods and quality control methods.

If polymer slurry, or blended mineral-polymer slurry, is proposed, the Contractor’s slurry

management plan shall include detailed provisions for controlling the quality of the slurry, including tests to be performed, the frequency of those tests, the test methods, and the maximum /minimum property requirements that must be met to ensure that the slurry meets its intended functions in the subsurface conditions at the Project site and with the construction methods that are to be used. The slurry management plan shall include a set of the slurry manufacturer's written recommendations and shall include the following tests, as a minimum: Density test (API 13B-1, Section 1), viscosity test (Marsh funnel and cup, API 13B-1, Section 2.2, or approved viscometer), pH test (pH meter, pH paper), and sand content test (API sand content kit, API 13B-1, Section 5).

If approved by the Engineer, the Contractor may use water as a drilling fluid. In that case, all of the provisions in Table 7.01-1 for mineral slurries shall be met, except that the maximum density shall not exceed 70 pcf (11 kN/m^2).

The Contractor shall ensure that a heavily contaminated slurry suspension, which could impair the free flow of concrete, has not accumulated in the bottom of the shaft. Prior to placing concrete in any shaft excavation, the Contractor shall take slurry samples using a sampling tool approved by the Engineer. Slurry samples shall be extracted from the base of the shaft and at intervals not exceeding 10 ft (3 m) up the slurry column in the shaft, until two consecutive samples produce acceptable values for density, viscosity, and pH.

When any slurry samples are found to be unacceptable, the Contractor shall take whatever action is necessary to bring the slurry within specification requirements. Concrete shall not be placed until the slurry in the hole is re-sampled and test results produce acceptable values.

Reports of all tests specified above, signed by an authorized representative of the Contractor, shall be furnished to the Engineer on completion of each drilled shaft.

During construction, the level of mineral or blended mineral-polymer slurry in the shaft excavation shall be maintained at a level not less than 4 ft (1.2 m) above the highest expected piezometric pressure head along the depth of the shaft, and the level of polymer slurry shall be maintained at a level not less than 6 ft (1.8 m) above the highest expected piezometric pressure head along the shaft. If at any time, in the opinion of the Engineer, the slurry construction method fails to produce the desired final results, the Contractor shall discontinue this method and propose an alternate method for approval by the Engineer.

Drilling tools shall contain vents to stabilize hydrostatic pressure above and below the tool during insertion and extraction. The rate of tool extraction shall not cause any noticeable turbulence in the slurry column in the borehole.

The Contractor shall arrange for the slurry manufacturer's technical representative to be present at the site during Project startup, or throughout the entire Project if continual difficulty is expected, to ensure that the slurry is mixed and managed properly.

19. **Excavation Inspection:** The Contractor shall check the dimensions and alignment of each shaft excavation. Final shaft depths shall be measured with a suitable weighted tape or other approved method after final cleaning. The Contractor shall provide equipment and access to the Engineer for confirming dimension, alignment, and bottom cleanliness. Required shaft cleanliness will be determined by the Engineer.

20. **Construction Tolerances:** The following construction tolerances apply to drilled shafts unless otherwise stated in the Contract documents:
    - **(a)** The center of the drilled shaft shall be within 3 in (76 mm) of plan position in the horizontal plane at the plan elevation for the top of the shaft.
    - **(b)** The vertical alignment of a vertical shaft excavation shall not vary from the plan alignment by more than 1/4 in/ft (21 mm/m) of depth.
    - **(c)** After the concrete is placed, the top of the reinforcing steel cage shall be no more than 6 in (150 mm) above and no more than 3 in (76 mm) below plan position.

(d) The top elevation of the shaft shall have a tolerance of plus 1 in (25 mm) or minus 3 in (76 mm) from the plan top-of-shaft elevation.

(e) Excavation equipment and methods shall be designed so that the completed shaft excavation will have a planar bottom. The cutting edges of excavation equipment shall be normal to the vertical axis of the equipment within a tolerance of +/- 3/8 in/ft (+/- 3 mm/m) of diameter.

Drilled shaft excavations and completed shafts not constructed within the required tolerances are unacceptable. The Contractor shall be responsible for correcting all unacceptable shaft excavations and completed shafts to the satisfaction of the Engineer. Materials and work necessary, including engineering analysis and redesign, to complete corrections for out-of-tolerance drilled shaft excavations, shall be furnished without cost to the State or extension of Contract time.

21. Reinforcing Steel Cage Construction and Placement: The reinforcing steel cage, consisting of longitudinal bars, ties, cage stiffener bars, spacers, centralizers, and other necessary appurtenances, shall be completely assembled and placed as a unit immediately after the shaft excavation is inspected and accepted, and prior to concrete placement. Internal stiffeners shall be removed as the cage is placed in the borehole so as not to interfere with the placement of concrete.

The reinforcing steel in the shaft shall be tied and supported so that the reinforcing steel will remain within allowable tolerances. Concrete spacers or other approved noncorrosive spacing devices shall be used at sufficient intervals near the bottom and at intervals not exceeding 10 ft (3 m) up the shaft to ensure concentric spacing for the entire cage length. Spacers shall be constructed of approved material equal in quality and durability to the concrete specified for the shaft. The spacers shall be of adequate dimension to ensure a minimum 3 in (76 mm) annular space between the outside of the reinforcing cage and the side of the excavated hole. Approved cylindrical concrete feet (bottom supports) shall be provided to ensure that the bottom of the cage is maintained the proper distance above the base.

The elevation of the top of the steel cage shall be checked before and after the concrete is placed. If the upward displacement of the rebar cage exceeds 2 in (51 mm) or if the downward displacement exceeds 6 in per 20 ft (152 mm per 6 meters) of shaft length, the drilled shaft will be considered defective. Corrections shall be made by the Contractor to the satisfaction of the Engineer. No additional shafts shall be constructed until the Contractor has modified the rebar cage support in a manner satisfactory to the Engineer.

22. Concrete Placement: Concrete placement shall be performed in accordance with the applicable portions of Section 6.01 and with the requirements herein.

Concrete shall be placed as soon as possible after reinforcing steel placement and after the Engineer has accepted the cleanliness of the shaft. The Engineer may re-inspect the shaft for cleanliness should there be any delays between initial acceptance of shaft cleanliness and commencement of the concrete placement. If during the delay the Engineer has determined that shaft cleanliness has deteriorated, the Engineer may require the Contractor to re-clean the shaft. The Contractor may be required to remove the rebar cage, should it be necessary to achieve the required shaft cleanliness. The Contractor will not be compensated for any cost or loss of time due to the need to re-clean the shaft.

Concrete placement shall be continuous from the bottom to the top elevation of the shaft. Concrete placement shall continue after the shaft excavation is filled and good quality concrete is evident at the top of shaft. Concrete shall be placed by free fall, or through a tremie or concrete pump. The free fall placement will only be permitted in dry holes. Concrete placed by free fall shall fall directly to the base without contacting the rebar cage or hole sidewall. Drop chutes may be used to direct concrete to the base during free fall placement.

The Contractor shall maintain Concreting Logs during all concrete placement. The log shall include, but not be limited to, concreting curves that shall plot Depth to Top of Concrete vs. Volume of Concrete Placed (for both theoretical and actual volumes of concrete placed). The Contractor shall provide a copy of each log to the Engineer upon completion of each drilled shaft concrete placement. A sample of the proposed log to be used by the Contractor shall be submitted as part of the Installation Plan working drawing submittal.

23. **Tremies:** Tremies may be used for concrete placement in either wet or dry holes. Tremies used to place concrete shall consist of a tube of sufficient length, weight, and diameter to discharge concrete at the shaft base elevation. The tremie shall not contain aluminum parts that may come in contact with the concrete. The tremie inside diameter shall be at least 6 times the maximum size of aggregate used in the concrete mix, but shall not be less than 10 in (254 mm). The inside and outside surfaces of the tremie shall be clean and smooth to permit flow of concrete and unimpeded withdrawal during concreting. The wall thickness of the tremie shall be adequate to prevent crimping or sharp bends, which may restrict concrete placement.

    The tremie used for wet excavation concrete placement shall be watertight. Underwater or under-slurry placement shall not begin until the tremie is placed to the shaft base elevation, and the concrete shall be kept completely separated from the water or slurry prior to the time it is discharged. Valves, bottom plates or plugs may be used for this purpose only if concrete discharge can begin within 1 tremie diameter of the base of the drilled shaft. Plugs shall either be removed from the excavation or be of a material, approved by the Engineer, which will not cause a defect in the shaft if not removed. The discharge end of the tremie shall be constructed to permit the free radial flow of concrete during placement operations. The tremie discharge end shall be immersed at least 5 ft (1.5 m) in concrete at all times after starting the flow of concrete. The flow of the concrete shall be continuous. The level of the concrete in the tremie shall be maintained above the level of slurry or water in the borehole at all times to prevent water or slurry intrusion into the shaft concrete.

    If at any time during the concrete placement, the tremie line orifice is removed from the fluid concrete column and discharges concrete above the rising concrete level, the shaft will be considered defective. All costs of repair or replacement of defective shafts shall be the responsibility of the Contractor.

24. **Pumped Concrete:** Concrete pumps and lines may be used for concrete placement in either wet or dry excavations. All pump lines shall have a minimum 4 in (102 mm) diameter and be constructed with watertight joints. Concrete placement shall not begin until the pump line discharge orifice is at the shaft base elevation.

    For wet excavations, a plug or similar device shall be used to separate the concrete from the fluid in the hole until pumping begins. The plug shall either be removed from the excavation or be of a material, approved by the Engineer, that will not cause a defect in the shaft if not removed.

    The discharge orifice shall remain at least 5 ft (1.5 m) below the surface of the fluid concrete. When lifting the pump line during concreting, the Contractor shall temporarily reduce the line pressure until the orifice has been repositioned at a higher level in the excavation.

    If at any time during the concrete placement the pump line orifice is removed from the fluid concrete column and discharges concrete above the rising concrete level, the shaft will be considered defective. All costs of repair or replacement of defective shafts shall be the responsibility of the Contractor.

25. **Drop Chutes:** Drop chutes may be used to direct placement of free-fall concrete in excavations where the maximum depth of water does not exceed 3 in (76 mm). Free fall placement is not permitted in wet excavations. Drop chutes shall consist of a smooth tube

of either 1 piece construction or sections that can be added and removed. A drop chute can also be a hopper with a short tube to direct the flow of concrete. Concrete may be placed through either the hopper at the top of the tube or side openings as the drop chute is retrieved during concrete placement. If concrete placement causes the shaft excavation to cave or slough, or if the concrete strikes the rebar cage or sidewall, the Contractor shall reduce the height of free fall or reduce the rate of concrete flow into the excavation, or both. If caving or sloughing of the borehole walls occurs during free-fall placement of concrete, the shaft will be considered defective. All costs of repair or replacement of defective shafts shall be the responsibility of the Contractor. If concrete placement cannot be satisfactorily accomplished by free fall, in the opinion of the Engineer, the Contractor shall use either tremie or pumping techniques to accomplish the concrete placement.

26. **Access Tubes for Cross-Hole Acoustic Logging:** Access tubes for cross-hole acoustic logging shall be placed on each reinforcing cage designated in the Contract documents in the position and at the frequency shown on the plans. Access tubes must be firmly secured to the cage. Normally, the tubes shall extend from 6 in (150 mm) above the bottom of the shaft to at least 3 ft (0.9 m) above the top of the shaft, or 2 ft (0.6 m) above the ground surface if the shaft is cut off below the ground surface. If cross-hole acoustic tests are to be performed, the access tubes shall be filled with clean water no later than 4 hours after placement of the concrete and the tubes capped during concrete placement to keep out concrete and debris. In all cases, the access tubes shall be as nearly parallel as possible and be placed as far from the longitudinal steel bars as possible.

    Prior to the beginning of downhole logging, the Contractor shall assure that the Cross-Hole Acoustic Logging test probes can pass through every tube to the bottom. If a tube is obstructed, the entire length of the obstructed access tube will not be measured for payment. The Engineer may also require the Contractor to core a hole within the drilled shaft near and to the full depth of the obstructed tube. The cored hole shall be large enough to accommodate the test probe for the full length of the hole. The coring equipment, coring procedure and location of the core hole shall be approved by the Engineer prior to beginning the coring process. The coring method shall provide for complete core recovery and shall minimize abrasion and erosion of the core. The core hole shall be placed at a position in the shaft that will not produce damage to the reinforcing steel in the shaft. The core hole shall be logged, voids or defects indicated on the log and the log submitted to the Engineer. Cores shall be preserved and made available for inspection by the Engineer. The core hole will be treated as an access tube for downhole testing. Core holes that are drilled for the purpose of providing a substitution for a blocked access tube shall be measured and paid for at the Contract unit price for Access Tubes.

    Upon completion of all tests involving access tubes and after acceptance of the drilled shaft, the access tubes and core holes shall be filled with grout.

27. **Evaluation and Acceptance/Rejection of Drilled Shafts:** Upon completion and integrity testing (if called for) of a drilled shaft, the Engineer will review all available drilling logs, drilled shaft construction logs, concreting logs, inspection reports, load test results, and integrity test results to determine the acceptability of the drilled shaft. If the Engineer determines that available data is inconclusive, the Engineer may call for additional integrity testing, coring, or other appropriate actions necessary for evaluating the acceptability of the drilled shaft. Should the additional integrity testing or coring confirm the presence of anomalies, the Contractor will not be compensated for the cost of the additional integrity testing or coring (even if the anomalies are determined to be non-critical and the shaft is found to be acceptable). Should additional integrity testing or coring demonstrate that anomalies are not present (prior to any remedial work), the additional integrity testing or coring will be paid for by the Department. The Contractor may continue to construct drilled shafts before receipt of notice of acceptance of the tested shaft or shafts by the Engineer. If

the Engineer finds previously constructed shaft(s) to be unacceptable, the Contractor shall be required to repair, at the Contractor's expense, the unacceptable shaft(s) to the satisfaction of the Engineer. The Contractor shall prove to the satisfaction of the Engineer, at no expense to the State, the acceptability of all shafts constructed since the time that the unacceptable shaft was constructed and the acceptability of the procedure to construct future shafts. If the Engineer deems the construction procedure to be unacceptable, the Contractor shall cease all drilled shaft construction until a new construction procedure is submitted by the Contractor and accepted by the Engineer.

The Contractor shall submit repair procedures to the Engineer for review and approval. If these plans involve change or impact to the structural design of the shafts or shaft caps, or to the geometry of the shafts, any proposed redesign of the Contractor's plan shall be performed at the Contractor's expense by a qualified Professional Engineer registered in the State of Connecticut.

The Engineer may require that additional shafts be tested. If the testing of the additional shaft(s) indicates the presence of a defect in any additional shaft, the testing cost for that shaft shall be borne by the Contractor and the Contractor shall repair the shaft at the Contractor's expense, as above. Any additional testing required by the Engineer on repaired drilled shafts shall be considered part of the Contractors remediation plan and its cost shall be borne by the Contractor.

7.01.04—Method of Measurement:

1. **Furnishing Drilled Shaft Drilling Equipment**: There will be no measurement of the work performed under this Lump Sum item.
2. **Drilled Shaft** will be measured for payment by the length in linear feet (meter) of the completed and accepted concrete drilled shaft, of the diameter and containing the reinforcement shown on the plans. The length will be determined as the difference between the plan top of shaft elevation and the final bottom of shaft elevation.
3. **Drilled Shaft Earth Excavation** will be measured for payment by the length in linear feet (meter) of completed earth excavation of the diameter shown on the plans (measured along the centerline of the shaft), either from the top of existing grade elevation prior to drilling or from the bottom of the drilled shaft cap elevation (whichever is lower), to either the top of competent rock elevation (if the drilled shaft extends onto or into competent rock) or to the bottom of the shaft elevation (if the shaft does not extend onto or into competent rock).
4. **Drilled Shaft Rock Excavation** will be measured for payment by the length in linear feet (meter) of completed rock excavation of the diameter shown on the plans, measured along the centerline of the shaft from the top of competent rock elevation to the bottom of the shaft elevation
5. **Obstructions** will be measured for payment, after designation as an obstruction by the Engineer, by the number of hours of work, or fraction thereof per obstruction, required to remove the obstruction.
6. **Trial Drilled Shaft** will be measured for payment by the authorized linear feet (meter) of trial shaft holes drilled to the diameter shown on the plans, completed (including backfill and restoration of area, when required) and accepted. The length of trial shaft holes will be determined as the difference between the existing ground surface elevation at the center of the trial shaft hole prior to drilling and the authorized bottom elevation of the hole.
7. **Exploration Test Borings** will be measured for payment by the length in linear feet (meter), measured from the existing grade elevation to the bottom elevation of the exploration hole, for each authorized exploration boring drilled.
8. **Permanent Casing** will be measured for payment by the length in linear feet (meter) of each diameter casing installed and accepted. The length to be paid will be measured along

the casing from the top of the shaft elevation or the top of casing, whichever is lower, to the bottom of the casing at each shaft location where permanent casing is used.

9. **Access Tubes** will be measured for payment by the length in linear feet (meter) of unobstructed access tube, installed and accepted in the drilled shafts, to the depths shown on the plans

7.01.05—Basis of Payment:

1. **Furnishing Drilled Shaft Drilling Equipment:** Payment for this item will be at the Contract lump sum price for "Furnishing Drilled Shaft Drilling Equipment" which will be considered full and complete payment for furnishing and moving the drilling equipment to the Project site, setting up the equipment at the required locations, and removing the equipment from the Project site.

   Payment of 60% of the lump sum amount bid for this item will be made when all drilling equipment is on the Project site, assembled and ready to drill foundation shafts. Payment of the remaining 40% of the lump sum amount will be made when all shafts have been drilled, all shaft concrete has been placed to the top of the shaft, all defects are repaired, and all drilled shafts have been accepted by the State.
2. **Drilled Shaft:** Drilled shafts will be paid for at the Contract unit price per linear foot (meter) for "Drilled Shaft (Diameter)" complete and accepted in place, including submittals, concrete and reinforcing steel, all labor, materials, equipment, temporary casings, slurry, slurry technical representative, blasting (if allowed), protection of existing facilities/utilities, vibration monitoring and incidentals necessary to complete the drilled shaft.
3. **Drilled Shaft Earth Excavation:** This work will be paid for at the Contract unit price per linear foot (meter) for "Drilled Shaft Earth Excavation (Diameter)" complete, including all labor, equipment, materials, water control, and disposal of excavated material necessary.
4. **Drilled Shaft Rock Excavation:** Drilled shaft rock excavation will be paid for at the Contract unit price per linear foot (meter) for "Drilled Shaft Rock Excavation (Diameter)" complete, including all labor, equipment, materials, water control, and disposal of excavated material necessary. No payment will be made for additional rock excavation or placement of additional shaft concrete resulting from blasting overbreak (if blasting is allowed).
5. **Obstructions:** Removal of obstructions will be paid for at the Contract unit price per hour for "Obstructions" complete, including all labor, equipment, materials, excavation of obstructions, water control, and disposal of excavated material necessary. If the Contractor chooses to use a larger shaft diameter for obstruction excavation, no additional compensation will be provided to perform this oversized obstruction excavation.
6. **Trial Drilled Shaft:** Trial drilled shafts will be paid for at the Contract unit price per linear foot (meter) for "Trial Drilled Shaft (Diameter)" complete and accepted, including all labor, equipment, materials, excavation of the trial drilled shaft through whatever materials are encountered to the bottom of shaft elevation shown on the plans or as authorized by the Engineer (using slurry approved by the Engineer as necessary), providing inspection facilities, backfilling the hole, restoring the site as required and all other expenses to complete the trial shaft.
7. **Exploration Test Borings:** Soil samples, rock cores or both, of the diameter and length required and authorized by the Engineer will be paid for at the Contract unit price per linear foot (meter) for "Exploration Test Boring" complete, including drilling, extracting, packaging and classifying samples or cores, delivery of same to the Engineer, furnishing concrete or grout to fill the core hole, providing a written log of the hole and all other expenses necessary.
8. **Permanent Casing:** Permanent casings will be paid for at the Contract price per linear foot (meter) for "Permanent Casing (Diameter)" complete, including furnishing and placing the

permanent casing in the shaft excavation.

9. **Access Tubes:** Access tubes will be paid for at the Contract unit price per linear foot (meter) of unobstructed “Access Tubes” complete and accepted, installed in the drilled shafts to the depths shown on the plans, including the post-test grouting of the access tubes.

Pay Item	Pay Unit
Furnishing Drilled Shaft Drilling Equipment	l.s. (l.s.)
Drilled Shaft (Diameter)	l.f. (m)
Drilled Shaft Earth Excavation (Diameter)	l.f. (m)
Drilled Shaft Rock Excavation (Diameter)	l.f. (m)
Obstructions	hr. (hr.)
Trial Drilled Shaft (Diameter)	l.f. (m)
Exploration Test Boring	l.f. (m)
Permanent Casing (Diameter)	l.f. (m)
Access Tubes	l.f. (m)

CONNECTICUT
SUPPLEMENTAL SPECIFICATION
SECTION 7.02
PILES

Delete the entire section and replace it with the following:

SECTION 7.02
PILES

7.02.01—Description
7.02.02—Materials
7.02.03—Construction Methods
7.02.04—Method of Measurement
7.02.05—Basis of Payment

7.02.01—Description: This item shall consist of furnishing and driving foundation piles of the type and dimensions designated. Piles shall conform to and be installed in accordance with these specifications, and at the location, and to the elevation, penetration and/or capacity shown on the plans, or as directed by the Engineer. If specified in the plans or directed by the Engineer, piles shall be tipped, shaped, reinforced or otherwise pointed and strengthened.

Test piles shall be piles of the type specified, driven in advance of placing orders for the piles, for the purpose of determining length or bearing capacity of piles. The Contractor shall furnish the piles in accordance with an itemized order list which will be furnished by the Engineer, showing the number and length of all piles. When test piles are specified, the pile lengths shown on the plans are for estimating purposes only. The actual lengths to be furnished for production piles will be determined by the Engineer after the test piles have been driven.

7.02.02—Materials: Piles of the type indicated on the plans shall meet the requirements of Articles M.09.02 and M.14.01.

7.02.03—Construction Methods:

1. Pile Types:

(a) Timber Piles: The method of storing and handling timber piles shall be such as to avoid damage to the piles. Special care shall be taken to avoid breaking the surface of treated piles. Cant dogs, hooks, or pike-poles shall not be used. Cuts or breaks in the surface of treated piling shall be given 3 brush coats of hot creosote oil of approved quality, and hot creosote oil shall be poured into all bolt holes.

(**b) Steel Piles:** The methods of storing and handling steel piles shall be such as to prevent damage to the piles and to protect them from corrosion.

(c) Cast-In-Place Concrete Piles: Cast-in-place concrete piles shall be constructed by driving steel shells and filling them with concrete. Shells shall be continuously or incrementally tapered, or cylindrical, or a combination of continuously or incrementally tapered lower sections, which are extended with cylindrical upper sections, unless otherwise provided in the plans or special provisions. The tapered portion of piles shall have a minimum tip diameter of 8 in (200 mm) and shall change in diameter not less than 1 in per every 12 ft (7 mm/m). Cylindrical piles and the cylindrical extension portions of tapered piles shall have a minimum diameter of 12 in (300 mm). Shells for cast-in-place concrete piles shall be formed by joining sections of the same manufacture, unless otherwise permitted by the Engineer. Composite shell piles, which

are piles composed of different thicknesses or of different manufacture, shall not be used unless shown on the plans or approved by the Engineer. Prefabricated driving points or other type tip enclosures shall be subject to the approval of the Engineer.

The Contractor shall furnish shells of a type and gage which can be driven without distortion. Shells which fail, fracture or otherwise distort during driving or after driving shall be withdrawn or replaced at the Contractor's expense. The metal of shells which are to be driven without a mandrel shall be of sufficient thickness to withstand the driving without failure, fracture or distortion, but in no case shall the thickness be less than No. 7 gage. Shells driven with a mandrel shall have a thickness not less than No. 18 gage. Piles having a shell thickness less than No. 9 gage shall be reinforced as shown on the plans.

Composite shell piles formed by extending lower sections of No. 7 or heavier gage, with upper sections of lighter than No. 7 gage, shall be driven with an internal mandrel in such a manner so as to insure shell alignment and maximum hammer energy transmission throughout the pile shell length. All details concerning compatibility of shell and mandrel construction shall be subject to the approval of the Engineer.

After driving has been completed, the shell shall be inspected and approved before any concrete is placed. The Contractor shall provide suitable lights and other equipment necessary to inspect each shell throughout its length.

All seams, joints and splices in shells shall develop the full strength of the shell and shall be watertight. Damaged shells that are unacceptable to the Engineer shall be filled with sand and a replacement shell or shells shall be driven adjacent thereto.

Reinforcement shall be placed in accordance with the requirements of the plans or special provisions.

No concrete shall be placed in a pile until all driving within a radius of 15 ft (4.5 m) from the pile has been completed, or until all the shells for any one bent have been completely driven. If this is not practical, all driving within the above limits shall be discontinued until the concrete in the last pile cast has set at least 7 days.

Concrete shall be placed continuously in each pile, care being used to fill every part of the shell, and to work concrete around the reinforcement without displacing it. Concrete shall not be placed in shells containing an accumulation of water or any foreign material.

Extensions, or "build-ups" on concrete piles, shall be avoided; but when necessary, they shall be made as specified in Subarticle 7.02.03-7.

(d) Prestressed Concrete Piles (Pretensioned): The piles shall be manufactured in accordance with the provision of Article 5.14.03, except as follows:

(1) Forms: The forms for the piles shall be of substantial construction and shall produce a uniformly smooth surface on all formed sides. A minimum concrete cover of 2 in (50 mm) shall be maintained for prestressing elements by the use of spreaders or by bundling in areas adjacent to openings or inserts. Ties shall also have a minimum cover of 2 in (50 mm) at these locations. Side forms carrying no load may be removed after 24 hours with the permission of the Engineer or after the concrete has reached the minimum transfer strength as required by Subarticle M.09.02-6.

(2) Finishing: The topside surface of the piles shall be given a uniformly smooth steel trowel finish to match the surface of the formed sides. The prestressing elements shall be cut flush or recessed 1/8 in (3 mm) to the top of the pile. Projecting fins and surface imperfections shall be removed in a workmanlike manner. Exposed jet pipe connections, inserts or other devices shall be removed or recessed to a depth as directed, and the hole or opening patched with non-shrink grout in a workmanlike manner. The patching material shall have a degree of finish comparable to the adjacent surfaces.

Additional finishing of piles, if required, shall be as shown on the plans or as otherwise directed.

(3) Handling and Storage: Care shall be taken during storage, transporting, hoisting and handling of the prestressed piles to prevent cracking or damage. Damaged piles shall be replaced by the Contractor at its expense. Lifting and support points shall be marked on the piles as required.

(4) Pile Extensions: Pile extensions shall normally be fabricated for this purpose in accordance with the specifications. However, sound sections of pile cutoffs or sound portions of rejected piles may be used, subject to the approval of the Engineer. Short pile extensions may, with the permission of the Engineer, be cast-in-place monolithically with the footing or cap.

2. Pile Driving Equipment:

(a) Hammers: Piles shall be driven with approved air, steam, diesel, or hydraulic hammers or a combination of acceptable hammer and water jet. The plant and equipment furnished for air/steam hammers shall have sufficient capacity to maintain at the hammer, under working conditions, the volume and pressure specified by the manufacturer. The plant and equipment shall be equipped with accurate pressure gauges which are easily accessible to the Engineer. The valve mechanism and other parts of the hammer shall be properly maintained so that the length of stroke for a single-acting hammer and the number of blows per minute for a double-acting hammer will be obtained. The power plant for hydraulic hammers shall have sufficient capacity to maintain at the hammer, under working conditions, the volume and pressure specified by the manufacturer. The power plant and equipment shall be equipped with accurate pressure gauges which are easily accessible to the Engineer.

The size of hammer shall be adapted to the type and size of piles and the driving conditions. Unless otherwise specified, the minimum rated striking energy per blow for hammers used shall be 7,000 ft lb (9,500 J) for driving timber piles; 15,000 ft lb (20,000 J) for driving steel piles and for driving shells for cast-in-place concrete piles; and 19,000 ft lb (25,000 J) for driving precast concrete piles and for driving prestressed concrete piles. The hammer model used for the driving of test piles shall be used for the driving of service or production piles, unless a change is authorized by the Engineer in writing. Hammers delivering an energy which the Engineer considers detrimental to the piles shall not be used.

Non-impact hammers, such as vibratory hammers, or driving aids such as jets, followers, pre-augered and prebored holes shall not be used unless either specifically permitted in writing by the Engineer or stated in the Contract.

(b) Pile Hammer Approval: All pile driving equipment furnished by the Contractor shall be subject to the approval of the Engineer. All pile driving equipment shall be sized in such a way that the piles can be driven with reasonable effort to the ordered lengths without damage. Approval of pile driving equipment by the Engineer will be based on wave equation analysis and/or other judgments. In no case shall the driving equipment be used without written approval of the Engineer. Prerequisite to such approval, the Contractor shall submit to the Engineer the necessary pile driving equipment information and wave equation analysis at least 30 days prior to driving piles. The wave equation analysis shall be signed, sealed and dated by a Connecticut licensed Professional Engineer.

The criteria that the Engineer will use to evaluate the driving equipment consists of both the required number of hammer blows per foot (per 0.25 meters) as well as the pile stresses at the required ultimate pile capacity. The required number of hammer blows indicated by the wave equation at the ultimate pile capacity shall be between 36 and 180 blows per foot (29 and 147 blows per 0.25 meters) for the driving equipment to be acceptable. In addition, for the driving equipment to be acceptable the pile stresses which are indicated by the wave equation to be generated by the driving equipment

shall not exceed the maximum driving stresses allowed by the governing design code stated in the Contract.

During pile driving operations, the Contractor shall use the approved system. Variations in the driving system will not be permitted without the Engineer's written approval. Any change in the driving system will only be considered after the Contractor has submitted the necessary information for a revised wave equation analysis.

If the Engineer determines the Contractor's hammer is unable to transfer sufficient energy to the pile, the hammer shall be removed from service until repaired to the satisfaction of the Engineer.

(c) Drive System Components and Accessories:

(1) Hammer Cushion: Impact pile driving equipment designed to be used with a hammer cushion shall be equipped with a suitable thickness of hammer cushion material to prevent damage to the hammer or pile and to insure uniform driving behavior. Hammer cushions shall be made of durable manufactured materials, provided in accordance with the hammer manufacturer's guidelines. Wood, wire rope, and asbestos hammer cushions are specifically disallowed and shall not be used. A striker plate as recommended by the hammer manufacturer shall be placed on the hammer cushion to insure uniform compression of the cushion material. The hammer cushion shall be removed from the helmet and inspected prior to beginning pile driving at each structure or after each 100 hours of pile driving, whichever is less. The Contractor shall replace any hammer cushion whose thickness is less than 75% of the original thickness.

(2) Helmet: Piles driven with impact hammers require an adequate helmet or drive head to distribute the hammer blow to the pile head. The helmet shall be axially aligned with the hammer and the pile. The helmet shall be guided by the leads and not be free-swinging. The helmet shall fit around the pile head in such a manner as to prevent transfer of torsional forces during driving, while maintaining proper alignment of hammer and pile. For steel and timber piling, the pile heads shall be cut squarely and a helmet, as recommended by the hammer manufacturer, shall be provided to hold the axis of the pile in line with the axis of the hammer. For precast concrete and prestressed concrete piles, the pile head shall be plane and perpendicular to the longitudinal axis of the pile to prevent eccentric impacts from the helmet. For special types of piles, appropriate helmets, mandrels or other devices shall be provided in accordance with the manufacturer's recommendations so that the piles may be driven without damage.

(3) Pile Cushion: The heads of concrete piles shall be protected by a pile cushion. Pile cushions shall be made of plywood, hardwood, or composite plywood and hardwood materials. The minimum pile cushion thickness placed on the pile head prior to driving shall be at least 4 in (100 mm). A new pile cushion shall be provided for each pile. In addition the pile cushion shall be replaced if, during the driving of any pile, the cushion is compressed more than 1/2 the original thickness or it begins to burn. The pile cushion dimensions shall match the cross sectional area of the pile top. The use of manufactured pile cushion materials in lieu of a wood pile cushion shall be evaluated on a case by case basis.

(4) Leads: Piles shall be supported in line and position with leads while being driven. Pile driver leads shall be constructed in a manner that affords freedom of movement of the hammer while maintaining alignment of the hammer and the pile to insure concentric impact for each blow. Leads may be either fixed or swinging type. Swinging leads, when used, shall be fitted with a pile gate at the bottom of the leads and, in the case of batter piles, a horizontal brace may be required between the crane and the leads. The pile section being driven shall not extend above the

leads. The leads shall be adequately embedded in the ground or the pile constrained in a structural frame such as a template to maintain alignment. The leads shall be of sufficient length to make the use of a follower unnecessary, and shall be so designed as to permit proper alignment of batter piles.

(5) Followers: Followers shall only be used when approved in writing by the Engineer, or when specifically stated in the Contract. In cases where a follower is permitted, the first pile in each bent and every tenth pile driven thereafter shall be driven full length without a follower, to determine that adequate pile penetration is being attained to develop the ultimate pile capacity. The follower and pile shall be held and maintained in equal and proper alignment during driving. The follower shall be of such material and dimensions to permit the piles to be driven to the penetration depth determined necessary from the driving of the full length piles. The final position and alignment of the first two piles installed with followers in each substructure unit shall be verified to be within the required location tolerances before additional piles are installed.

(6) Jets: Jetting shall only be permitted if approved in writing by the Engineer or when specifically stated in the contract documents. When jetting is not required in the contract documents, but approved after the Contractor's request, the Contractor shall determine the number of jets and the volume and pressure of water at the jet nozzles necessary to freely erode the material adjacent to the pile without affecting the lateral stability of the in place pile. When jetting is specifically required in the contract documents, the plant shall have sufficient capacity to deliver at all times at least 100 psi (700 kPa) pressure at two 3/4-in (19 mm) jet nozzles. In either case, unless otherwise indicated by the Engineer, jet pipes shall be removed when the pile toe is a minimum of 5 ft (1.5 m) above prescribed toe elevation and the pile shall be driven to the required ultimate pile capacity with an impact hammer. Also, the Contractor shall control, treat if necessary, and dispose of all jet water in a manner satisfactory to the Engineer and in accordance with Article 1.10.

(7) Pre-Augering: When stated in the Contract, the Contractor shall pre-auger holes at pile locations to the depths shown on the plans. Pre-augered holes shall be of a size smaller than the diameter or diagonal of the pile cross section; however, large enough to allow penetration of the pile to the specified depth. If subsurface obstructions, such as boulders or rock layers, are encountered, the hole diameter may be increased to the least dimension which is adequate for pile installation. Any void space remaining around the pile after completion of driving shall be filled with sand or other approved material. The use of spuds shall not be permitted in lieu of pre-augering. Augering, wet-rotary drilling, or other methods of pre-augering shall be used only when approved by the Engineer. When permitted, such procedures shall be carried out in a manner which will not impair the capacity of the piles already in place or the safety of existing adjacent structures. If the Engineer determines that pre-augering has disturbed the capacities of previously installed piles, those piles that have been disturbed shall be restored to conditions meeting the requirements of this specification by redriving or by other methods acceptable to the Engineer. Redriving or other remedial measures shall be instituted after the pre-augering operations in the area have been completed.

3. Pile Capacity

(a) Ultimate Pile Capacity: Piles shall be driven by the Contractor to the penetration depth shown on the plans or to a greater depth if necessary to obtain the ultimate pile capacity. The ultimate pile capacity shall be as defined in the contract documents.

Jetting or other methods shall not be used to facilitate pile penetration unless specifically permitted in the Contract or in writing by the Engineer. The ultimate pile

capacity of jetted piles shall be based on driving resistances recorded during impact driving after the jet pipes have been removed. Jetted piles not attaining the ultimate pile capacity at the ordered length shall be spliced, as required, at the Contractor's cost, and driven with an impact hammer until the ultimate pile capacity is achieved.

The ultimate pile capacity of piles driven with followers shall only be considered acceptable when the follower driven piles attain the same pile toe elevation or top of bedrock elevation as required for the full length piles driven without followers that attained the required ultimate pile capacity.

(b) Wave Equation: The ultimate pile capacity shall be determined by the Engineer. Piles shall be driven with the approved driving equipment to the ordered length or other lengths necessary to obtain the required ultimate pile capacity. Jetting or other methods to facilitate pile penetration shall not be used unless specifically permitted either in the contract documents or approved by the Engineer after a revised driving resistance is established from the wave equation analysis. Adequate pile penetration shall be considered to be obtained when the specified wave equation resistance criteria is achieved within 5 ft (1.5 m) of the pile toe elevation, based on ordered length. Piles not achieving the specified resistance within these limits shall be driven to penetrations established by the Engineer.

(c) Static Load Tests: Compression load tests shall be performed by procedures set forth in ASTM D-1143 using the quick load test method, except that the test shall be taken to plunging failure or the capacity of the loading system. Testing equipment and measuring systems shall conform to ASTM D-1143, except that the loading system shall be capable of applying 150% of the ultimate pile capacity as stated in the contract documents, and that a load cell and spherical bearing plate shall be used. The apparatus shall be constructed to allow the various increments of the load to be placed gradually, without causing vibration to the test pile. The Contractor shall submit to the Engineer for approval working drawings of the loading apparatus in accordance with Article 1.05.02. When the approved method requires the use of tension (reaction) piles, the tension piles, when feasible, shall be of the same type and diameter as the production piles, and shall be driven in the location of permanent piles except that timber or tapered piles installed in permanent locations shall not be used as tension piles.

The top elevation of the test pile shall be determined immediately after driving and again just before load testing to check for heave. Any pile which heaves more than 1/4 in (6 mm) shall be redriven or jacked to the original elevation prior to testing. Unless otherwise specified in the contract, a minimum 3-day waiting period shall be observed between the driving of any anchor piles or the load test pile and the commencement of the load test.

On completion of the load testing, any test or anchor piling not a part of the finished structure shall be removed or cut off at least 1 ft (300 mm) below either the bottom of footing or the finished ground elevation, if not located within the footing area.

(d) Dynamic Pile Driving Analysis (PDA) Test: Dynamic measurements following procedures set forth in ASTM D-4945 will be taken during the driving of piles designated as dynamic monitoring test piles. The Contractor shall employ a qualified specialty Consultant, which has successfully completed no less than 10 dynamic pile driving tests, to perform the testing and report preparation for all Dynamic Pile Driving Analysis (PDA) Tests to be performed.

At least 30 days prior to driving the test piles the Contractor shall submit to the Engineer for review and approval the qualified specialty consultant, as well as the complete installation, and testing procedures. The submittal shall include all

necessary pile driving equipment and support facilities to drive the piles to capacities and depths shown on the plans within allowable stress limits. As part of the submittal the Contractor's Consultant shall perform a wave equation analyses, and a summary report confirming that the pile driving system proposed by the Contractor can meet the capacity, driving resistance and allowable stress limits.

All equipment necessary for the dynamic monitoring of the piles such as gages, cables, etc., shall be furnished by the Contractor's Consultant. The equipment shall meet the requirements of ASTM D-4945, Standard Test Method for High Strain Dynamic Testing of Piles, and be capable of testing the pile to 1-1/2 times the ultimate pile capacity. An experienced engineer, who has successfully completed no less than 10 dynamic pile driving tests, shall operate the Pile Driving Analyzer in the field. The Contractor shall furnish a shelter within 100 ft (30 m) of test location(s) to protect the dynamic test equipment from the elements. The shelter shall be a minimum floor size of 400 s.f. (40 sq.m), with a minimum ceiling height of 7 ft (2 m), and an inside temperature maintained between 50 and 85°F (10 and 29°C).

The Contractor shall provide power to the test pile locations for the duration of the dynamic testing. The power supply shall consist of a power source providing 115-Volt alternating current with a frequency of 60 Hz and a minimum of 2 kilowatts. If field generators are used as the power source, provide functioning meters to monitor power voltage and frequency. Direct current welders or non-constant power sources are unacceptable.

Prior to lifting the pile to be dynamically tested, the Contractor shall provide as a minimum 3 ft (1 m) of clear access to 180 degree opposite faces of the pile for pile preparation. The Contractor or its Consultant shall then drill and prepare holes in the pile for gage attachment.

The Contractor or its Consultant shall attach the gages to the pile before driving the piles. Pile driving shall be performed using routine pile installation procedures. When the level of the gages is within 1 ft (300 mm) of the ground surface, or obstruction, driving shall be halted to remove the gages from the pile. If additional driving is required, the pile shall be spliced and gages shall be reattached to the head of the next pile segment.

With the dynamic testing equipment attached, the Contractor shall drive the pile to the design penetration depth, or to a depth determined by the Engineer. The Engineer will use the ultimate pile capacity estimates at the time of driving or restriking from dynamic test methods, or both, to determine the required pile penetration depth for the ultimate pile capacity. The stresses in the piles will be monitored during driving with the dynamic test equipment to ensure that the actual driving stresses do not exceed the maximum allowed values. If necessary, the Contractor shall reduce the driving energy transmitted to the pile by using additional cushions or reducing the energy output of the hammer in order to maintain driving stresses below the maximum values. If non-axial driving is indicated by dynamic test equipment measurements, the Contractor shall immediately realign the driving system.

After the initial drive of the pile, the Contractor shall wait 24 hours, or the time specified in the Contract, and restrike the dynamic monitoring test pile with the dynamic testing instruments attached. A cold hammer shall not be used for the restrike. The hammer shall be warmed up before restrike begins by applying at least 20 blows to another pile. The maximum amount of penetration required during restrike shall be 6 in (150 mm), or 50 hammer blows, whichever occurs first.

The Contractor’s Consultant shall provide preliminary estimates of pile capacity of the test pile to the Engineer within 24 hours of the restrike of each tested pile. The Contractor’s Consultant shall also prepare and submit a written report within 5 calendar days of the completion of the testing. This report shall contain a discussion of the pile capacity obtained from the dynamic testing. CAPWAP analyses of the dynamic testing data shall be performed on data obtained at the end of initial driving and the beginning of restrike. The Engineer may request additional analyses at selected pile penetration depths. The report shall also discuss hammer and driving system performance, driving stress levels, and pile integrity. The report is to be prepared, signed, sealed and dated by a Connecticut licensed Professional Engineer. Production piles cannot be driven until the report has been submitted and approved by the Engineer.

4. Test Piles and Order Lists: Test piles shall be driven at the locations shown on the plans and to the penetration depths specified by the Engineer. Test piles shall be driven to a driving resistance established by the Engineer at the estimated pile toe elevation. The Contractor shall excavate the ground at each test pile to the elevation of the bottom of the footing before the pile is driven. All test piles shall be driven with impact hammers unless specifically stated otherwise in the plans. In general, the specified length of test piles will be greater than the estimated length of production piles in order to provide for variation in soil conditions. The driving equipment used for driving test piles shall be identical to the equipment proposed for driving the production piling. Approval of driving equipment shall meet the requirements of these Specifications.

Test piles that do not attain the specified driving resistance at a depth of 6 in (150 mm) above the estimated pile tip elevation, or are specified as a dynamic monitoring pile, shall be redriven after being allowed to set up. The minimum time period before restrike shall be 24 hours, or as specified in the Contract. A cold hammer shall not be used for the restrike. The hammer used shall be warmed up by applying at least 20 blows to another pile.

Unless otherwise specified in the contract documents, the Contractor shall not order piling to be used in the permanent structure until test pile data has been reviewed and pile order lengths are authorized by the Engineer. The Engineer will provide the pile order list after completion of the test pile(s) and dynamic pile driving analysis (PDA) tests and/or pile loading tests specified in the Contract.

When no test piles are specified for a substructure, the estimated pile lengths in the Contract are taken as the pile order length.

The lengths given in the order list will be based on the lengths which are assumed after cutoff to remain in the completed structure. The Contractor shall, without added compensation, increase the lengths to provide for fresh heading and for such additional length as may be necessary to suit the Contractor's method of operation.

5. Pile Preparation and Driving: The heads of all piles shall be plane and perpendicular to the longitudinal axis of the pile before the helmet is attached. Approval of a pile hammer relative to driving stress damage shall not relieve the Contractor of responsibility for piles damaged because of misalignment of the leads, failure of cushion materials, failure of splices, malfunctioning of the pile hammer, or other improper construction methods. Piles damaged for such reasons shall be rejected and replaced at the Contractor's expense when the Engineer determines that the damage impairs the strength of the pile.

If it becomes necessary and is authorized by the Engineer to resort to jetting, spudding or pre-holing — and further, if no Contract bid price is asked for in the proposal for jetting, spudding, or pre-holing — such work will be paid for as "extra work" in

accordance with Articles 1.04.05 and 1.09.04.

The use of a hammer with a greater mass, or the use of piles manufactured or designed with pile tips of a nature to provide for better penetration such as but not limited to composite shells, tapered sections or H-pile sections, shall not be considered as extra work. Authorized point reinforcement for piles shall be a separate item.

Piles for exposed pile bents shall be driven with pile driver leads and templates. They shall be of rigid design and construction and shall maintain the required position and alignment of the piles within the tolerances hereinafter specified. Templates shall be anchored or spudded into position, shall be capable of guiding all piles required for the bent and shall remain in place until all the piles in the bent are driven.

(a) Location and Alignment Tolerance: Piles shall be driven with a variation of not more than 1/4 in/ft (20 mm/m) from the vertical or from the batter line indicated, except that piles for trestle bents shall be so driven that the cap may be placed in its proper location without inducing excessive stresses in the piles. Upon completion of driving and released from leads, exposed piles such as in bents shall not have a variation of more than 2 in (50 mm) at the cut-off elevation from the position shown on the plans. Unless otherwise permitted in writing by the Engineer, failure to meet this tolerance shall be cause for rejection. Other foundation piles shall not be out of the position shown on the plans more than 6 in (150 mm) after driving. The Engineer may require that driving be stopped in order to check the pile alignment. Pulling laterally on piles to correct misalignment, or splicing a properly aligned section on a misaligned section shall not be permitted.

If the location and/or alignment tolerances specified are exceeded, the extent of overloading shall be evaluated by the Engineer. If in the judgment of the Engineer, corrective measures are necessary, suitable measures shall be designed and constructed by the Contractor.

(b) Heaved Piles: Level readings to measure pile heave after driving shall be made by the Contractor at the start of pile driving operations and shall continue until the Engineer determines that such checking is no longer required. Level readings shall be taken immediately after the pile has been driven and again after piles within a radius of 15 ft (4.5 m) have been driven. If pile heave is observed, the Contractor shall take accurate level readings referenced to a fixed datum on all piles immediately after installation and periodically thereafter as adjacent piles are driven to determine the pile heave range. All piles that have been heaved more than 1/4 in (6 mm) shall be redriven at the Contractor's expense, to the required resistance or penetration. Concrete shall not be placed in pile casings until pile driving has progressed beyond a radius of 15 ft (4.5 m) from the pile to be concreted. If pile heave is detected for pipe or shell piles which have been filled with concrete, the piles shall be redriven to original position after the concrete has obtained sufficient strength and a proper hammer-pile cushion system, satisfactory to the Engineer, is used.

(c) Installation Sequence: The order of placing individual piles in pile groups shall be either starting from the center of the group and proceeding outwards in both directions or starting at the outside row and proceeding progressively across the group.

6. Unsatisfactory Piles: The method used in driving piles shall not subject the piles to excessive or undue abuse producing crushing and spalling of concrete, injurious splitting, splintering, and brooming of the wood, or deformation of the steel. Misaligned piles shall not be forced into proper position. Any pile damaged during driving by reason of internal defects, or by improper driving, or driven out of its proper location, or driven below the designated cutoff elevation, shall be corrected

by the Contractor by a method approved by the Engineer.

Piles which have been bent during installation shall be considered unsatisfactory unless the ultimate capacity is proven by load tests performed at the Contractor's expense. If such tests indicate inadequate capacity, corrective measures as determined by the Engineer shall be taken, such as use of bent piles at reduced capacity, installation of additional piles, strengthening of bent piles, or replacement of bent piles.

A concrete pile will be considered defective if a visible crack, or cracks, appears around the entire periphery of the pile, or if any defect is observed which, as determined by the Engineer, affects the strength or life of the pile.

7. Splicing Piles and Extensions: Full length piles shall be used when practicable; but if splices cannot be avoided, piles or shells for cast-in-place piles may be spliced in accordance with the requirements of the plans. Piles shall not be spliced except with the approval of the Engineer. Splices in excess of two per pile for timber, steel and cast-in-place concrete piles will not be permitted except with special permission of the Engineer. Only one splice per pile will be permitted in precast concrete or prestressed concrete piles. In the absence of splice details in the plans, piles or shells for cast-in-place concrete piles shall be spliced in accordance with the pile or shell manufacturer's recommendations, subject to the approval of the Engineer. Working Drawings for prefabricated splicing devices and their method of installation shall be submitted to the Engineer for review. All seams, joints and splices shall develop the full strength of the pile.

8. Point Reinforcement: When directed by the Engineer, the contractor shall point-reinforce piles. Such point-reinforcement shall be in accordance with the plans or as directed.

9. Cutoff Lengths: The pile head of all permanent piles and pile casings shall be cutoff at the elevation shown on the plans or as ordered by the Engineer. All cutoff lengths shall become the property of the Contractor, and shall be removed by the Contractor from the Site of the work.

10. Painting Steel Piles and Steel Pile Shells: When steel piles or steel pile shells extend above the ground surface or water surface, they shall be painted as specified elsewhere in the Contract or as ordered by the Engineer. This protection shall extend from an elevation 2 ft (600 mm) below the ground or water surface to the top of the exposed steel.

11. Welding on Piles: When required or permitted, all welding on piles shall be done in accordance with the requirements of the current AWS Structural Welding Code.

7.02.04—Method of Measurement

1. Steel Piles-Timber Piles-Precast Concrete Piles: The length of (type) piles which will be the basis for the pay computation to be included under the item of furnishing (type) piles, shall be number of linear feet (meters) of (type) piles authorized by the Engineer or actually furnished by the Contractor, whichever is the lesser amount.

Length of pile cutoffs previously paid for under authorized lengths of piles and subsequently incorporated into the work will not be measured for payment.

The work, materials, tools, equipment and labor incidental to the disposal of pile cutoffs will not be measured for payment.

The amounts to be included under the item for driving (type) piles will be the number of linear feet (meters) of piles actually driven and accepted in the completed structure.

2. Cast-in-Place Concrete Piles: The amount to be included under the item of cast-in-place concrete piles shall be the number of linear feet (meters) of piles actually driven and accepted in place in the completed structure.

Cut-off materials from shells shall remain the property of the Contractor. They will be paid for in accordance with the unit cost applying in the Contractor's bill or bills for such shells, except that no payment will be made of material cut off from shells furnished by the Contractor in excess of the ordered length. The unit of measurement will be the unit applying in the Contractor's bill or bills for such shells. Material cut off from shells furnished by the Contractor in lengths in excess of those ordered by the Engineer will not be measured for payment hereunder. The work, materials, tools, equipment and labor incidental to the disposal of cutoffs will not be measured for payment.

Reinforcement, if required in cast-in-place concrete piles, will not be measured for payment.

3. Prestressed Concrete Piles (Pretensioned): The length of the prestressed concrete piles, which will be the basis for the pay computation, shall be the number of linear feet (meters) of piles authorized by the Engineer or actually furnished by the Contractor, whichever is the lesser amount. The length of any specified pile tip protruding from the concrete will be included in the length measured for payment.

Also included in the length measured for payment will be the length of precast pile extensions ordered by the Engineer. Not to be included, however, is the length of pile extension furnished in excess of the ordered length. The length of projection dowels shall not be included in the length measured for payment.

Extensions to prestressed concrete piles which are poured monolithically with the footing or pier cap will be paid for at the Contract unit prices for the several items involved, which prices shall be full compensation for all materials, tools, equipment and labor necessary to the completion of the work.

Cut-offs shall not be used for pile extension. The work, material, tools equipment and labor incidental to the disposal of cutoffs will not be measured for payment.

The amounts to be included under the item for driving prestressed concrete piles shall be the number of linear feet (meters) of piles actually driven and accepted in the completed structure.

4. Test Piles: The amounts to be included under the respective items for test piles, of the type and length specified, shall be the number of test piles actually driven and accepted. Lengths of test piles ordered by the Engineer in excess of the length or lengths specified in the Contract will be measured for payment by the actual number of linear feet (meters) ordered, furnished and accepted by the Engineer. Driving of such pile extensions will be measured for payment by the actual length driven and left in place.

Authorized splices performed on test piles will be measured for payment by the number of authorized splices actually completed and accepted. Splicing of test piles shall not be considered as authorized splices when such splicing is done to complete piles to the test pile length specified in the Contract.

5. Static Load Tests: The amount to be included under the item of static loading tests shall be the actual number of static load tests completed and accepted.

6. Dynamic Pile Driving Analysis (PDA) Test: The amount to be included under this item shall be the actual number of piles which are driven and restruck with dynamic monitoring equipment attached, completed and accepted.

7. Splices: The amount to be included under the items for splicing timber, steel, cast-in-place concrete, precast concrete and prestressed concrete piles (pretensioned) shall be the number of authorized pile splices actually completed and accepted.

The splicing of timber and steel piles, steel shells for cast-in-place concrete piles, precast concrete piles and prestressed concrete piles (pretensioned) shall not be considered as authorized splices when such splicing is performed to complete piles to the order lengths, as defined in Subarticle 7.02.03-7, or when the furnished lengths of such piles are less than the order lengths approved by the Engineer.

8. Point Reinforcement for Piles: The amount to be included under the item of "Point Reinforcement for Piles" for the type of piles specified shall be the number of authorized reinforced points actually completed and accepted.

9. Pre-Augering of Piles: The amount to be included under the item “Pre-Augering of Piles” shall be the number of linear feet (meters) of pre-augering completed and accepted by the Engineer.

7.02.05--Basis of Payment: This work will be paid for as follows:

1. Steel Piles: Payment for furnishing steel piles of the lengths authorized will be at the Contract unit price per pound (kilogram) for "Furnishing Steel Piles," which price shall include furnishing, delivery, storage and handling, and all materials, equipment, tools and labor incidental thereto. The weight (mass) of steel pile caps will be included with and paid for under this item.

Payment for driving steel piles will be at the contract unit price per linear foot (meter) for "Driving Steel Piles," complete in place, which price shall include all materials, equipment, tools and labor incidental thereto.

2. Timber Piles: Payment for furnishing timber piles or treated timber piles, up to a length 10 ft (3 m) greater than that specified on the plans or in the proposal form, will be at the Contract unit price per foot (meter) for "Furnishing Timber Piles (Length)" and "Furnishing Treated Timber Piles (Length)," respectively, which price shall include furnishing, delivery, peeling, storage and handling, and all materials, equipment, tools and labor incidental thereto.

In case the length of any piles finally ordered is more than 10 ft (3 m), but less than 20 ft (6 m), greater than the length specified on the plans or proposal form, payment for furnishing such piles shall be at a price per linear foot (meter) equal to the original Contract price, plus 20% thereof.

In case the length of any piles finally ordered is 20 ft (6 m) or more greater than the length specified on the plans or proposal form, payment for furnishing such piles shall be at a price per linear foot (meter) equal to the original Contract price plus 40% thereof.

Payment for driving timber piles or treated timber piles will be at the Contract unit price per linear foot (meter) for "Driving Timber Piles" and "Driving Treated Timber Piles," respectively, complete in place and regardless of length, which price shall include all materials, equipment, tools and labor incidental thereto.

3. Cast-in-Place Concrete Piles: Payment for cast-in-place concrete piles will be at the Contract unit price per linear foot (meter) for "Cast-in-Place Concrete Piles," complete in place, including all materials, equipment, tools and labor incidental thereto.

Cut-off materials from shells shall remain the property of the Contractor. They will be paid for in accordance with the unit cost applying in the Contractor's bill or bills for such shells, except that no payment will be made for material cut off from shells furnished by the Contractor in excess of the ordered length.

4. Prestressed Concrete Piles: Payment for furnishing prestressed concrete piles, of the lengths required, will be at the Contract unit price per linear foot (meter) for "Furnishing Prestressed Concrete Piles" of the type and size as shown on the plans, which price shall include furnishing, delivery, storage and handling, and all materials, equipment, tools and labor incidental thereto.

Payment for driving prestressed concrete piles will be at the Contract unit price per linear foot (meter) for "Driving Prestressed Concrete Piles," complete in place, which price shall include all material, equipment, tools and labor incidental thereto. Also included shall be all work involved in cutting piles to the direct cut-off elevation.

5. Test Piles: Test piles will be paid for at the Contract unit price each for "Test Pile," of the type and length specified, which price shall constitute the complete compensation for furnishing and driving test piles and shall include all materials, equipment, tools and labor incidental thereto. Authorized splices to test piles will be paid for at 200% of the Contract unit price bid for Splicing Timber Piles, Splicing Steel Piles, Splicing Cast-in-Place Piles or Splicing Prestressed Concrete Piles, whichever type of test pile the splice has been performed on; and such payment shall be for all costs including materials, equipment, tools and labor incidental thereto.

Extension to test piles in excess of the specified length will be paid for on the following basis, which shall include all equipment, tools, splices, labor and work incidental thereto.

(a) Timber Test Piles: Extensions will be paid for at 125% of the Contract unit price per linear foot (meter) for "Furnishing Timber Piles," of the shortest length specified in the proposal, and at 125% of the Contract unit price per linear foot (meter) for "Driving Timber Piles."

(b) Steel Test Piles: Extensions will be paid for at 125% of the Contract unit price per pound (kilogram) for "Furnishing Steel Piles" and at 125% of the Contract unit price per linear foot (meter) for "Driving Steel Piles."

(c) Cast-in-Place Concrete Test Piles: Extensions will be paid for at 125% of the Contract unit price per linear foot (meter) for "Cast-in-Place Concrete Piles." Cut-off materials from shells will be paid for as provided in Subarticle 7.02.05-3.

(d) Prestressed Concrete Test Piles: Extensions will be paid for at 125% of the Contract unit price per linear foot (meter) for "Furnishing Prestressed Concrete Piles," and at 125% of the Contract unit price per linear foot (meter) for "Driving Prestressed Concrete Piles."

6. Static Load Tests: Loading tests will be paid for at the Contract unit price each for "Pile Loading Test," which price shall include all expenses incidental to loading the pile or group of piles and removing the load, platform, etc., upon completion of the test.

7. Dynamic Pile Driving Analysis (PDA) Test: Dynamic monitoring will be paid for at the Contract unit price each for “Dynamic Pile Driving Analysis (PDA) Test” which price shall include complete compensation for each pile tested using a pile driving analyzer during driving and restrike, including all materials, equipment, tools and labor incidental thereto, as well as providing preliminary and summary report(s).

8. Splices: Authorized splices in timber, steel, cast-in-place piles, precast concrete and prestressed concrete piles will be paid for at the Contract unit price each for "Splicing Timber Piles," "Splicing Steel Piles," "Splicing Cast-in-Place Concrete Piles," "Splicing Precast Concrete Piles," "Splicing Prestressed Concrete Piles," respectively, which price shall include all materials, except as otherwise noted, and all equipment, tools and labor incidental thereto. In the absence of such prices, authorized splices will be paid for as extra work.

9. Trimming and Cutting: There shall be no direct compensation for cutting off timber, steel, precast concrete or prestressed concrete piles and shells for cast-in-place concrete piles as ordered; but the cost thereof shall be considered as included in the cost of the pile items.

10. Point Reinforcement for Piles: Authorized points for pointing and reinforcing piles will be paid for at the Contract unit price each for "Point Reinforcement for Timber Piles," or "Point Reinforcement for Steel Piles," respectively, whichever applies, which price shall

include all materials, equipment, tools and labor incidental thereto. In the absence of such prices, authorized points will be paid for as extra work.

11. Pre-Augering of Piles: Payment for “Pre-Augering of Piles” will be at the Contract unit price per linear foot (meter) for “Pre-Augering of Piles,” which price shall include which price shall include all materials, and all equipment, tools and labor incidental thereto.

12. Underground Obstructions: If the required pile penetration is not reached due to the presence of underground obstructions which are not the result of the Contractor's operations but are due to the presence of earlier construction at the site, then the cost of removing these obstructions and back-filling the area will be paid for as extra work unless otherwise specified in the Contract.

13. Painting: There will be no additional payment for painting steel piles and steel pile shells, but the cost thereof shall be considered as included in the cost of furnishing and driving the piles.

14. Disposal of Pile Cutoffs: All costs incidental to the disposal of cutoff material will be included in the price of furnishing of the type of pile specified.

Pay Item	Pay Unit
Furnishing (Type) Piles (Lengths)	lb. (kg)
Driving (Type) Piles	l.f. (m)
Test Pile (Type-Length)	ea. (ea.)
Splicing (Type) Piles	ea. (ea.)
Point Reinforcement for (Type) Piles	ea. (ea.)
Pile Loading Test	ea. (ea.)
Dynamic Pile Driving Analysis (PDA) Test	ea. (ea.)
Pre-Augering of Piles	l.f. (m)

CONNECTICUT
SUPPLEMENTAL SPECIFICATION
SECTION 7.06
MICROPILES

Add the following section:

SECTION 7.06
MICROPILES

7.06.01—Description
7.06.02—Materials
7.06.03—Construction Methods
7.06.04—Method of Measurement
7.06.05—Basis of Payment

7.06.01—Description: This work shall consist of constructing micropiles in accordance with the Contract. The Contractor is responsible for furnishing all design, materials, products, accessories, tools, equipment, services, transportation, labor and supervision required for design, installation and testing of micropiles and micropile top attachments for this Project.

The Contractor shall select the micropile type, size, pile-top attachment, installation means and methods, and shall estimate the grout-to-ground bond value(s) and determine the required grout bond length and final micropile diameter.

The Contractor shall design and install micropiles that will develop the load capacities indicated on the plans. The micropile load capacities shall be confirmed by verification and proof-load testing as required and must meet the test acceptance criteria specified herein. The Contractor's micropile design shall conform to requirements set forth in this specification and to micropile design minimums/maximums shown on the Contract drawings.

7.06.02—Materials: Furnish new materials without defects. Materials for micropiles shall meet the following requirements:

1. **Admixtures for Grout:** Admixtures shall be as specified in M.03.01. Accelerators are not permitted. Expansive admixtures and admixtures containing chlorides are not permitted.
2. **Cement:** Cement shall meet the requirements of ASTM C 150/AASHTO M85, Types II, III or V.
3. **Centralizers and Spacers:** Centralizers and spacers shall be fabricated from Schedule 40 PVC pipe.
4. **Grout:** Grout shall consist of neat cement or fine aggregate/cement mixture meeting the 3- and 28-day required compressive strengths specified in the Contract. The grout shall meet the requirements of AASHTO T106/ASTM C109 and any minimum and maximum properties shown on the plans or in M.03.05.
5. **Permanent Casing Pipe:** Permanent steel casing or steel pipe shall conform to required minimum and maximum properties shown on the plans. The steel casing or steel pipe shall comply with one or more of the following specifications: ASTM A252 or A106, or API N-80.
6. **Reinforcing Bars:** Reinforcing steel shall be deformed bars in accordance with ASTM A615/AASHTO M31. Continuous spiral deformations (*i.e.*, continuous thread bars) shall be used for same. Bar tendon couplers, if required, shall develop the ultimate tensile strength of the bars without evidence of any failure.
7. **Encapsulation:** Encapsulation (double corrosion protection) shall be shop-fabricated using high-density, corrugated polyethylene tubing meeting with the requirements of ASTM

D3350/AASHTO M252 with a nominal wall thickness of 0.03 in (0.8 mm). The inside annulus between the reinforcing bar(s) and the encapsulation tube shall measure a minimum 0.2 in (5 mm) and be fully grouted with non-shrink grout conforming to M.03.

7.06.03—Construction Methods:

1. **Contractor's Experience Requirements:** The micropile Contractor shall be experienced in the construction and load testing of micropiles, having successfully constructed at least 5 projects in the last 5 years involving construction totaling at least 100 micropiles of capacity similar to those required in this Contract.

   The Contractor shall have previous micropile drilling and grouting experience in soil/rock conditions similar to those on this Project. The Contractor shall submit construction details, structural details and load test results for at least 3 previous successful micropile load tests from different projects similar in scope to this Project.

   The Contractor shall assign or hire a professional engineer, licensed in the State of Connecticut, to supervise the micropile work. That engineer shall have experience on at least 10 projects of similar scope to this Project, completed over the past 5 years. The Contractor shall not use manufacturers' representatives to satisfy the supervising engineer requirements of this Section. The Contractor may use a single independent consultant for this purpose, provided that the consultant has specific experience as described above and operates specifically for the purpose of transferring technology and skills in micropiling to contractors. The on-Site foremen and drill rig operators shall also have experience on at least 10 projects over the past 5 years installing micropiles of equal or greater capacity than is required in this Contract.

   The Contractor shall assign or hire a professional engineer, licensed in the State of Connecticut, to design the micropiles. This engineer shall have experience in the design of at least 3 successfully-completed micropile projects over the past 5 years, with micropiles of capacity similar to those in this Contract. This engineer shall also be responsible for design, supervision and reporting of the verification and proof test(s).

   At least 45 calendar days before the planned start of micropile construction, the Contractor shall submit 5 copies of the completed Project reference list and a personnel list. The Project reference list shall include a brief Project description with the owner's name and current phone number and load test reports. The personnel list shall identify the supervising Project Engineer, drill rig operators, and on-Site foremen to be assigned to this Project by the Contractor. The personnel list shall contain a summary of each individual's experience and be complete enough for the Engineer to determine whether each individual has the required qualifications.

   Work shall not start, nor materials be ordered, until the Engineer gives written approval of the Contractor's experience qualifications. The Engineer may suspend work if the Contractor uses non-approved personnel on the Project. If work is suspended for that reason, the Contractor shall be fully liable for all resulting costs, and Department will not make any Contract time adjustments because of the suspension.

2. **Micropile Design Requirements and Submittals:** The micropiles shall be designed to meet the specific loading conditions, as shown on the plans and approved working drawings. The micropile design shall conform to all required minimum and maximum properties shown on the plans, the "American Association of State Highway and Transportation Officials (AASHTO) LRFD Bridge Design Specifications" (including the latest Interims), and the "Connecticut Department of Transportation Bridge Design Manual."

   Where called for on the plans, the Contractor shall provide corrosion protection of the internal steel reinforcing bars, consisting of encapsulation, epoxy coating or grout. Where the permanent casing is used for a portion of the micropile, the corrosion protection shall extend at least 5 ft (1.5 m) into the casing. Steel pipe used for micropile permanent casing

shall incorporate an additional 1/16 in (1.6 mm) thickness of sacrificial steel for corrosion protection.

The Contractor shall submit working drawings, in accordance with 1.05.02, to the Engineer. The working drawings shall include all information required for the design, plans, construction and quality control of the micropile installation. The information shall include, but not necessarily be limited to, the following:

(a) Design Computations

I. A written summary report describing the overall micropile design.
II. A statement of applicable code requirements and design references.
III. Micropile structure critical design cross-section(s) geometry, including soil/rock strata and piezometric levels and location, magnitude and direction of applied loadings, including slope or external surcharge loads.
IV. A description of design criteria to be applied to the work, including, soil/rock shear strengths (friction angle and cohesion), unit weights, and grout-to-ground bond value(s) and micropile drill-hole diameter assumptions for each soil/rock stratum.
V. A statement of Resistance/Load factors used in the design of the grout-to-ground bond value(s), surcharges, soil/rock and material unit weights, steel, grout and concrete materials.
VI. Design calculation sheets with the Project number, micropile structure location, designation, date of preparation, initials of designer and checker, and page number at the top of each page. Provide an index page for the design calculations.
VII. Design notes including a list of symbols and computer program used in the design.
VII. Pile-to-footing connection calculations.

(b) Plans

I. A plan view of the micropile structures providing:
   1) A reference baseline and elevation datum.
   2) The offset from the construction centerline or baseline to the face of the micropile structure at all changes in horizontal alignment.
   3) Beginning and end of micropile structure stations.
   4) Right-of-way and permanent or temporary construction easement limits, location of all known active and abandoned utilities, adjacent structures or other potential interference; and the centerline of any drainage structure or drainage pipe behind, passing through or passing under the micropile structure.
   5) Subsurface exploration locations shown on the plan view of the proposed micropile structure alignment with appropriate reference baselines to fix the locations of the exploration relative to the micropile structure.
II. An elevation view of the micropile structure(s) providing:
   1) Elevation view showing micropile locations and elevations; vertical and horizontal spacing; batter and alignment and the location of drainage elements (if applicable).
   2) Existing and finished grade profiles both behind and in front of the micropile structure.
III. Design parameters and applicable codes.
IV. General notes for constructing the micropile structure, including construction sequencing or other special construction requirements.
V. Horizontal and vertical curve data affecting the micropile structure and micropile structure control points. Match lines or other details to relate micropile structure stationing to centerline stationing.
VI. A listing of the summary of quantities on the elevation drawing of each micropile structure, showing pay item estimated quantities.

VII. Micropile typical sections, including micropile spacing and inclination; minimum drill-hole diameter; pipe casing and reinforcing bar size and details; splice type and locations; centralizers and spacers; grout bond zone and casing plunge length (if used); corrosion protection details; and connection details to the substructure footing, anchorages and plates.

VIII. A typical detail of verification and production proof test micropiles defining the micropile length, minimum drill-hole diameter, inclination, and load test bonded and unbonded test lengths.

IX. Details, dimensions and schedules for all micropiles, casing and reinforcing steel, including reinforcing bar bending details.

X. Details for constructing micropile structures around drainage facilities (if applicable).

(c) Construction Procedures

I. Detailed step-by-step description of the proposed micropile construction procedure, including personnel, testing and equipment to ensure quality control. This step-by-step procedure shall be shown in sufficient detail to allow the Engineer to monitor the construction and quality of the micropiles.

II. Proposed start date, time schedule and micropile installation schedule providing the following:

1) Micropile number.
2) Micropile design load.
3) Type and size of rebar.
4) Minimum total bond length.
5) Total micropile length.
6) Micropile top footing attachment.

III. If welding of casing is proposed, submit the welding procedure. All welding shall be done in accordance with the current AWS Structural Welding Code.

IV. Information on space requirements for installation equipment that verify the proposed equipment can perform at the Site.

V. Proposed plan describing how surface water, drill flush, and excess waste grout will be controlled and disposed. This will include computations showing that the proposed equipment used for flushing the micropile during installation (*i.e.*, pumps for water flushing and compressors for air flushing) will maintain up-hole (flushing) velocities necessary to ensure that all of the flush and drill cuttings are returned up through the annulus between the drill rod and casing.

VI. Certified mill test reports for the reinforcing steel and for permanent casing. The ultimate strength, yield strength, elongation, and material properties composition shall be included. For API N-80 pipe casing, coupon test results may be submitted in lieu of mill certification.

VII. Proposed Grouting Plan. The grouting plan shall include complete descriptions, and details for the following:

a. Grout mix design and type of materials to be used in the grout, including certified test data and trial batch reports. The Contractor shall also provide specific gravity of the wet mix design.
b. Methods and equipment for accurately monitoring and recording the grout depth and grout volume as the grout is being placed.
c. Estimated curing time for grout to achieve specified strength. Previous test results for the proposed grout mix completed within 1 year of the start of grouting may be submitted for initial verification and acceptance and start of production work. During production, grout shall be tested in accordance with Article M.03.05.
d. Procedure and equipment for Contractor monitoring of grout quality. At a minimum, the Contractor shall be required to use a Baroid Mud Balance (per API

RP-13B-1) to check the specific gravity of the mixed grout prior to placement into each drilled micropile.

(d) Detailed plans for the proposed micropile load testing method. This shall include all drawings, details, and structural design calculations necessary to clearly describe the proposed test method, reaction load system capacity and equipment setup, types and accuracy of apparatus to be used for applying and measuring the test loads and pile top movements in accordance with this Specification.

(e) Calibration reports and data for each test jack, pressure gauge and master pressure gauge and electronic load cell to be used. The calibration tests shall have been performed by an independent testing laboratory within 90 calendar days of the date submitted. Testing shall not commence until the Engineer has reviewed and accepted the jack, pressure gauge, master pressure gauge and electronic load cell calibration data.

Work shall not begin until the construction submittals have been received, reviewed, and accepted in writing by the Engineer. Any submittals found to be unacceptable by the Engineer shall be revised, resubmitted and accepted prior to commencing work.

3. **Pre-construction Meeting:** A pre-construction meeting will be scheduled by the Engineer and held prior to the start of micropile construction. The Engineer, prime Contractor, micropile specialty Contractor and micropile design engineer shall attend the meeting. Attendance is mandatory. The pre-construction meeting will be conducted in order to clarify the construction requirements for the work, to coordinate the construction schedule and activities, and to identify contractual relationships and delineation of responsibilities among the prime Contractor and the various subcontractors - specifically those pertaining to excavation for micropile structures, installation of temporary sheeting, anticipated subsurface conditions, micropile installation and testing, micropile structure survey control and Site drainage control.

4. **Site Drainage Control:** The Contractor shall control and properly dispose of drill flush and construction related waste, including excess grout, in accordance with Section 1.10, any related Special Provisions in the Contract, and all applicable codes and regulations. Drill flush shall be conveyed by pipe, hose or conduit away from the location where the micropile is being drilled and away from any adjacent structure or facility. The Engineer will determine the acceptable distance required to convey the drill flush away from the micropile location. The Contractor shall provide positive control and discharge of all surface water that will affect construction of the micropile installation; maintain all pipes or conduits used to control surface water during construction; and repair any damage caused by surface water at no additional cost to the Department. Upon substantial completion of the work, the Contractor shall remove surface water control pipes or conduits from the Site. Alternatively, with the approval of the Engineer, the Contractor may leave pipes or conduits in place if fully grouted.

The Contractor shall immediately contact the Engineer if unanticipated existing subsurface drainage structures or other utilities are discovered during excavation or drilling; and shall suspend work in such areas until remedial measures meeting the Engineer's approval are implemented.

5. **Micropile Allowable Construction Tolerances:**

(a) Centerline of piling shall not be more than 3 in (75 mm) from indicated plan location. Centerline of reinforcing steel shall not be more than 0.5 in (13 mm) from the centerline of the pile.

(b) Pile shall be plumb or battered within 2% of total-length plan alignment.

(c) Top elevation of pile shall be plus 1 in (25 mm) or minus 1 in (25 mm) maximum from vertical elevation indicated.

6. **Micropile Installation:** The micropile Contractor shall select the drilling method, the grouting procedure and the grouting pressure used for installation of the micropiles. The micropile Contractor shall also determine the micropile casing size, final drill-hole diameter and bond length, and central tendon reinforcement steel size necessary to develop the specified load capacities and load testing requirements. All micropile material properties and dimensions shall conform to minimum/maximum properties and dimensions as shown in the Contract drawings. The micropile Contractor is also responsible for estimating the grout take. The Department will make no extra payment for grout overruns.

   Should the plans require uncased drilling of the micropile into bedrock, the permanent or temporary casing shall be drilled a minimum 6 in (150 mm) into ledge or to a depth within the ledge so as to prevent subsidence of overburden into the uncased and bonded zone portion of the drill-hole (*i.e.*, the rock socket). The plans show estimated permanent casing lengths for each substructure unit. Any difference in the required length of permanent casing accepted by the Engineer from the estimated lengths shown on the plans shall be measured for payment and credit. The Department will make no payment for differences in required length of temporary casing.

   The drilling equipment and methods shall be suitable for drilling through the conditions to be encountered, without causing damage to the overburden, any overlying or adjacent structures, buried structures, utilities or services. If called for in the drilling method description, or by the nature of the stratum to be drilled through, the micropile Contractor shall furnish an overburden casing of the type and thickness that can be installed without distortion. Casings that fail, fracture, or otherwise distort during drilling or after drilling shall, unless otherwise directed, be withdrawn or replaced at the micropile Contractor's expense. The drill-hole must be open along its full length to at least the design minimum drill-hole diameter prior to placing grout and reinforcement.

   Temporary casing or other approved method of pile drill-hole support will be required in caving or unstable ground in order to permit the pile shaft to form a drill hole of the minimum design diameter. The Contractor's proposed method(s) to provide drill-hole support and to prevent detrimental ground movements must be reviewed by the Engineer in advance of its use. Detrimental ground movement is defined as movement that requires remedial repair measures, in order to maintain Site conditions as determined by the Engineer.

   Drilling and flushing methods shall be selected by the Contractor. Use of drilling fluid containing bentonite or any other non-reverting drilling fluid, however, is not allowed. The drilling and flushing system chosen by the Contractor shall be capable of providing the necessary up-hole velocity so as to ensure that all the flush and drill cuttings are returned up through the annulus between the drill rod and casing. The flush must not be allowed to escape in an uncontrollable fashion into the soil and rock formations outside the casing. The return flush must never be blocked or suppressed within the casing on its way back to the surface. The Contractor shall monitor and modify, as needed, the flush velocity and other elements of its drilling methods that could contribute to return of flush outside the casing. When return of flush is substantially lost during drilling, the Contractor shall halt drilling operations and immediately notify the Engineer of the situation.

   During construction, the Contractor shall observe the ground conditions in the vicinity of the micropile construction site on a daily basis for signs of ground heave or subsidence, and must immediately notify the Engineer if signs of movements are observed. The micropile Contractor shall immediately suspend or modify drilling or grouting operations if ground heave or subsidence is observed, if the micropile structure is adversely affected, or if adjacent structures are damaged because of the drilling or grouting. If the Engineer determines that the movements require corrective action, the micropile Contractor shall take corrective actions necessary to stop the movement or perform repairs.

   Reinforcement may be placed prior to grouting the drill-hole. Reinforcement surface shall

be free of deleterious substances such as soil, mud, grease or oil that might contaminate the grout or coat the reinforcement and impair bond. Pile reinforcement groups, if used, shall be sufficiently strong to withstand the installation and grouting process without damage or disturbance.

The micropile Contractor shall check pile-top elevations and adjust all installed micropiles to the planned elevations.

Centralizers and spacers shall be provided at 10 ft (3 m) on center maximum spacing. The uppermost and lowest centralizers shall be located a maximum of 3 ft (0.9 m) from the top and bottom of the micropile. Centralizers and spacers shall be securely attached to the reinforcement, sized to position the reinforcement within 1/2 in (12 mm) of plan location from center of pile, sized to allow grout tremie pipe insertion to the bottom of the drill-hole, and must be of sufficient size to allow grout to flow freely up the drill-hole, up the casing, and between adjacent reinforcing bars. The reinforcing steel shall be inserted into the drill-hole to the desired depth without difficulty. Partially inserted reinforcing bars shall not be driven or forced into the hole. The micropile Contractor shall re-drill and reinsert reinforcing steel when necessary in order to facilitate insertion.

Lengths of casing and reinforcing bars to be spliced shall be secured in proper alignment and in a manner that prevents eccentricity or an angle between the axes of the lengths to be spliced. Splices and threaded joints shall meet the requirements of the rebar material. Threaded pipe casing joints shall be located at least 2 casing diameters (OD) from a splice in any reinforcing bar. When multiple bars are used, bar splices shall be staggered at least 1 ft (0.3 m).

Micropiles shall be grouted on the same day that the load transfer bond length is drilled. The grouting equipment used shall be a colloidal grout plant and shall produce a grout free of lumps and undispersed cement. Paddle type mixers are not acceptable. The micropile Contractor shall have means and methods of measuring the grout quantity and pumping pressures during the grouting operations. The grout pump shall be equipped with a pressure gauge to monitor grout pressure. A second pressure gauge shall be placed at the point of injection into the pile top. The pressure gauge shall be capable of measuring pressures of at least 145 psi (1000 kPa) or 2 times the actual grout pressure used, whichever is greater. The grout shall be kept in agitation prior to mixing. Grout shall be placed within 1 hour of mixing. The grouting equipment shall be sized to enable each pile to be grouted in one continuous operation. The grout shall be injected from the lowest point of the drill-hole, and injection shall continue until uncontaminated grout flows from the top of the pile. The grout may be pumped through grout tubes, casing, hollow stem augers or drill rods. Temporary casing, if used, shall be extracted in stages so as to ensure that, after each length of casing is removed, the grout level is brought back up to the ground level before the next length is removed. The tremie pipe or casing shall always extend below the level of the existing grout in the drill-hole. The grout takes shall be controlled to prevent excessive heave or fracturing of rock or soil formations. Upon completion of grouting, the grout tube may remain in the hole, but must be filled with grout.

If the Contractor elects to use a post-grouting system, working drawings and details shall be submitted to the Engineer for review in accordance with 1.05.02.

Grout within the micropile verification and proof test piles shall attain the minimum required 3-day compressive strength prior to load testing. During production, micropile grout shall be tested by the Contractor for compressive strength in accordance with AASHTO T106/ASTM C109 at a frequency of no less than 1 set of 3 each 2 in (50 mm) grout cubes, or 3 in (75 mm) cylinders, from each grout plant each day of operation, or per every 10 micropiles, whichever occurs more frequently. The compressive strength shall be the average of the 3 cubes or cylinders tested.

Grout consistency as measured by grout density shall be determined by the micropile

Contractor per API RP-13B-1 at a frequency of at least 1 test per pile, conducted just prior to start of pile grouting. The Baroid Mud Balance used in accordance with API RP-13B-1 is an approved device for determining the grout density of neat cement grout.

Provide grout cube or cylinder compressive strength and grout density test results to the Engineer within 24 hours of testing.

7. **Micropile Installation Records:** The micropile Contractor shall prepare and submit to the Engineer full-length installation records for each micropile installed. The records shall be submitted within 1 work shift after that pile installation is completed. The data shall be recorded on a micropile installation log. A separate log shall be provided for each micropile.
8. **Verification and Proof Tests:** The Contractor shall perform verification and proof testing of piles at the locations specified on the plans, and perform compression load testing in accord with ASTM D1143 and tension load testing in accord with ASTM D3689, except as modified herein. If the Contractor designs micropiles using tip resistance, it shall use ASTM D1143 for verification and proof tests thereof.

The Contractor shall perform pre-production verification pile load test(s) to verify the design of the pile system and the construction methods proposed prior to installing any production piles. Sacrificial verification test pile(s) shall be constructed by the Contractor in conformance with the approved working drawings, and shall install verification test pile(s) at the location(s) shown on the plans or at location(s) approved by the Engineer.

Verification load test(s) shall be performed in order to verify that the micropiles installed by the Contractor will meet the compression and tensile load capacities and load test acceptance criteria, and to verify that the length of the micropile load transfer bond zone is adequate. The micropile verification load test results must verify the Contractor's design and installation methods.

The drilling method, grouting method, permanent casing length, micropile diameter (cased and uncased) and bond zone length for the verification test pile shall be identical to those specified for the production piles at the given locations. The verification test micropile structural steel sections shall be sized to safely resist the maximum test load.

The maximum verification and proof test loads applied to the micropile shall not exceed 80% of the structural capacity of the micropile structural elements, including steel yield in tension, steel yield or buckling in compression, or grout crushing in compression. Any required increase in strength of the verification and proof test pile elements above the strength required for the production piles shall be provided for in the Contractor's bid price.

Testing equipment used in connection with the micropiles shall include dial gauges, dial gauge independent reference frame, jack and pressure gauge, electronic load cell (with readout device), and a reaction frame. The load cell is required only for the creep test portion of the verification test. The Contractor shall provide a description of test setup and jack, pressure gauge and load cell calibration curves as outlined in the Submittals Section.

The Contractor shall design the testing reaction frame to be sufficiently rigid and of adequate dimensions to ensure that excessive deformation of the testing equipment does not occur; and must align the jack, bearing plates, and stressing anchorage so that unloading and repositioning of the equipment will not be required during the test.

The Contractor shall also apply and measure the test load with a hydraulic jack and pressure gauge. The pressure gauge shall be graduated in 100 psi (690 kPa) increments or less. The jack and pressure gauge shall have a pressure range not exceeding twice the anticipated maximum test pressure. Jack ram travel shall be sufficient to allow the test to be done without resetting the equipment. The Contractor shall monitor the creep-test-load-hold during verification tests with both the pressure gauge and the electronic load cell; and shall use the load cell in order to accurately maintain a constant load hold during the creep-test-load-hold increment of the verification test.

The Contractor shall measure the pile top movement with a dial gauge capable of

measuring to 0.001 in (0.025 mm). The dial gauge shall have a travel sufficient to allow the test to be done without having to reset the gauge; and the Contractor shall visually align the gauge to be parallel with the axis of the micropile and support the gauge independently from the jack, pile or reaction frame. The Contractor shall also use a minimum of 2 dial gauges when the test setup requires reaction against the ground or single reaction piles on each side of the test pile.

The Contractor shall test verification piles to the following loads: Alignment Load ("AL"), Maximum Service Limit Pile Load ("SVL") and the Ultimate Pile Capacity ("UPC"). The SVL and UPC loads are provided on the Contract drawings. The AL is the minimum load applied to the micropile during testing needed to keep the testing equipment correctly positioned. The AL shall not exceed 5% of the SVL. The verification pile load tests shall be made by incrementally loading the micropile in accordance with the cyclic load schedule shown in Table 7.06-1, for both compression and tension loading (test the compression prior to tension).

TABLE 7.06-1, Cyclic Load Schedule for Verification Pile Load Test

Step	Loading	Applied Load	Hold Time (minutes)
1	Apply AL	AL	2.5
2	Cycle 1	0.15 SVL	2.5
		0.30 SVL	2.5
		0.45 SVL	2.5
		0.60 SVL	2.5
		0.75 SVL	2.5
		0.90 SVL	2.5
		1.00 SVL	10 to 60 minutes
		0.60 SVL	2.5
		0.30 SVL	2.5
		AL	
3	Cycle 2	0.075 UPC	2.5
		0.150 UPC	2.5
		0.225 UPC	2.5
		0.300 UPC	2.5
		0.375 UPC	2.5
		0.450 UPC	2.5
		0.525 UPC	2.5
		0.600 UPC	2.5
		0.675 UPC	2.5
		0.750 UPC	2.5
		0.825 UPC	2.5
		0.900 UPC	2.5
		1.000 UPC	10 to 60 minutes
		0.750 UPC	2.5
		0.525 UPC	2.5
		0.225 UPC	2.5
		AL	

Pile-top movement shall be measured at each load increment. The load-hold period shall start as soon as each test load increment is applied. Pile movement during the 1.00 SVL and 1.000 UPC loads shall be measured and recorded at 1,2,3, 4, 5, 6, 10, 20, 30, 50, and 60 minutes. The alignment load shall not exceed 5% of the SVL. Dial gauges shall be reset to zero (0) after the initial AL is applied.

The acceptance criteria for micropile verification load test are:

(a) The Engineer shall determine the criteria for tolerable movement during the load test at the top of the micropile.

(b) At the end of the maximum test load increment for each cycle, test piles shall have a creep rate not exceeding 0.05 in (1.3 mm) /log cycle time (1 to 10 minutes) or 0.1 in (2.5 mm) /log cycle time (6 to 60 minutes or the last log cycle if held longer). The creep rate shall be linear or decreasing throughout the hold period.

(c) Failure does not occur at any load increment up to and including the maximum test load for each cycle. Failure is defined as load at which attempts to further increase the test load simply result in continued pile movement.

Upon completion of the test, the Contractor shall prepare and submit a report of the test results, stamped by a professional engineer, for review and acceptance by the Engineer prior to beginning installation of production micropiles. This report shall include written confirmation of the verification micropile's capacity.

If a verification tested micropile fails to meet the acceptance criteria, the Contractor shall modify the design, the construction procedure, or both. These modifications may include modifying the installation methods, increasing the bond length, or changing the micropile type. Any modification that necessitates changes of the structure shall be submitted as a revision to the working drawings and require the Engineer's review and acceptance. Any modifications of design or construction procedures or cost of additional verification test piles and load testing shall be at the Contractor's expense. At the completion of verification testing, the Contractor shall remove test piles down to the elevation specified by the Engineer.

The Contractor shall perform proof load tests at the micropile locations as shown on the plans, and shall perform proof-load tests on the first set of production piles installed at each designated substructure unit prior to the installation of the remaining production piles in that unit. The initial proof-test piles shall be installed at the locations shown on the plans. Upon completion of each test, the Contractor shall prepare and submit a report of the test results, stamped by a professional engineer, for review and acceptance by the Engineer

The Contractor shall test proof test piles to a maximum test load of 1.00 times the Maximum Strength Limit Pile Load (STL). The STL load is provided on the Contract drawings. Proof tests shall be made by incrementally loading the micropile as shown in Table 7.06-2, to be used for both compression and tension loading:

TABLE 7.06-2, Incremental Loading for Proof Test Piles

Step	Loading	Applied Load	Hold Time (minutes)
1	Apply AL		2.5
2	Cycle 1	0.15 STL	2.5
		0.30 STL	2.5
		0.45 STL	2.5
		0.60 STL	2.5
		0.75 STL	2.5
		0.90 STL	2.5
		1.00 STL	10 to 60 minutes
		0.60 STL	2.5
		0.30 STL	2.5
		AL	

Depending on performance, either a 10-minute or 60-minute creep test shall be performed at the 1.00 STL test load. Where the pile top movement between 1 and 10 minutes exceeds 0.039 in (1 mm), the Maximum Test Load shall be maintained an additional 50

minutes. Movements shall be recorded at 1, 2, 3, 5, 6, 10, 20, 30, 50 and 60 minutes. The alignment load shall not exceed 5% of STL. Dial gauges shall be reset to zero after the initial AL is applied.

The acceptance criteria for micropile proof load tests are:

(a) The Engineer shall determine the criteria for tolerable movement during the load test at the top of the micropile.

(b) At the end of the 1.00 STL test load increment, test piles shall have a creep rate not exceeding 0.05 in (1.3 mm) /log cycle time (1 to 10 minutes) or 0.1 in (2.5 mm) /log cycle time (6 to 60 minutes). The creep rate shall be linear or decreasing throughout the creep-load hold period.

(c) Failure does not occur at the 1.00 STL maximum test load. Failure is defined as the load at which attempts to further increase the test load simply result in continued pile movement.

If a proof-tested micropile fails to meet the acceptance criteria, the Contractor shall immediately proof test another micropile within that footing. For failed piles and further construction of other piles, the Contractor shall modify the design, the construction procedure, or both. These modifications may include installing replacement micropiles, incorporating piles at not more than 50% of the maximum load attained, post-grouting the tested pile and re-proof testing the pile, modifying installation methods, increasing the bond length, or changing the micropile type. Any modification that necessitates changes of the structure design shall require the Engineer's prior review and acceptance. Any modifications of design or construction procedures, or cost of additional verification test piles and verification or proof load testing, or replacement production micropiles, shall be at the Contractor's expense.

7.06.04—Method of Measurement:

1. **Micropiles** will be measured for payment by the number of micropiles installed and accepted. There will be no separate measurement or payment for furnishing the design of the micropiles or developing installation methods to meet these Specifications.
2. **Verification Test for Micropiles** will be measured for payment by the number of verification tests performed on sacrificial micropiles.
3. **Proof Test for Micropiles** will be measured for payment by the number of proof tests performed on production micropiles.
4. **Micropile Length Adjustment** will be measured for payment by the length in linear feet (meter) of the difference between the estimated length of permanent casing, as shown on the plans, and the actual length of permanent casing installed and accepted by the Engineer. (Note that the permanent casing length is measured from the bottom of the pile cap to the permanent casing tip, including the required embedment of casing into rock. Embedment into the pile cap will not be measured for payment because it is considered incidental to micropile construction. Any increase in casing length will be measured for payment to the Contractor, and any decrease in casing length will be measured for credit to the State.)

There will be no separate measurement or payment for mobilization and demobilization associated with this item.

7.06.05—Basis of Payment:

1. **Micropiles** will be paid for at the Contract unit price each for "Micropiles" complete and accepted in place, including all design, development of installation methods, materials, equipment, tools, proper disposal of drilling spoil and labor incidental thereto.
2. **Verification Test for Micropiles** will be paid for at the Contract unit price each for "Verification Test for Micropiles" completed on sacrificial micropiles, including all materials,

testing equipment, tools, test reports, removal of test piles and labor incidental thereto.

3. **Proof Test for Micropiles** will be paid for at the Contract unit price each for “Proof Test for Micropiles” completed on production micropiles, including all materials, testing equipment, tools, test reports and labor incidental thereto.
4. **Micropile Length Adjustment** will be paid for at the Contract unit price per linear foot (meter) for “Micropile Length Adjustment” complete and accepted, including all materials, equipment, tools, and labor incidental thereto.

Pay Item	Pay Unit
Micropiles	ea. (ea.)
Verification Test for Micropiles	ea. (ea.)
Proof Test for Micropiles	ea. (ea.)
Micropile Length Adjustment	l.f. (m)

CONNECTICUT
SUPPLEMENTAL SPECIFICATION
SECTION 7.16
TEMPORARY EARTH RETAINING SYSTEM

Add the following Section:

SECTION 7.16
TEMPORARY EARTH RETAINING SYSTEM

7.16.01—Description
7.16.02—Materials
7.16.03—Construction Methods
7.16.04—Method of Measurement
7.16.05—Basis of Payment

7.16.01—Description: Temporary earth retaining system shall be any type of adequately braced temporary retaining wall, such as temporary sheet piling, which the Contractor elects to build to satisfy, and which does satisfy, the condition that existing facilities be properly retained during excavation or fill for the placement of substructure or other facilities. The temporary earth retaining system shall be designed by the Contractor and constructed where shown on the plans. This system shall be removed upon completion of the permanent work, except that some sections may be left in place when so ordered by the Engineer.

7.16.02—Materials: Steel sheet piling shall meet the requirements of ASTM A328. Timber sheet piling shall meet the requirements of Subarticle M.09.01-1. Materials other than steel or timber, or a combination of these may be used provided they are properly designed for the purpose intended. Systems utilizing other material(s) shall meet the manufacturer's specifications and Project specifications. The parts list shall be furnished for the proprietary system and the Contractor shall provide material certificates for the parts

7.16.03—Construction Methods: The temporary earth retaining system shall be safely designed and shall be carried to adequate depths and braced as necessary for proper performance of the work. Construction shall be such as to permit excavation or fill as required. Interior dimensions shall be such as to give sufficient clearance for construction of forms and their inspection, and for battered pile clearance when necessary. Movements of the system or bracing which prevent the proper completion of the substructure shall be corrected at the sole expense of the Contractor. No part of the temporary earth retaining system or bracing shall be allowed to extend into the substructure without written permission of the Engineer.

Working drawings and design calculations for the temporary earth retaining system shall be submitted in accordance with the requirements of Article 1.05.02-2. The working drawings and design calculations shall be prepared, sealed, and signed by a Professional Engineer, licensed in the State of Connecticut. The furnishing of such plans shall not serve to relieve the Contractor of any part of its responsibility for the safety of the work or for the successful completion of the Project.

Unless otherwise ordered by the Engineer, all parts of the temporary earth retaining system shall be removed upon completion of the work for which it was provided. The excavation shall be backfilled and properly compacted, prior to removal of the system, unless otherwise permitted by the Engineer. The temporary earth retaining system may be left in place at the option of the Contractor if so permitted by the Engineer, provided that it is cut off at an elevation as directed by the Engineer and the cutoffs removed from the Site.

7.16.04—Method of Measurement: Temporary earth retaining system will be measured for payment by the number of square feet (square meters) of temporary earth retaining system completed and accepted, as computed from the horizontal and vertical payment limits shown on the plans or as ordered. If no payment limits are shown on the plans, the limits used for payment will be the actual horizontal limit of temporary earth retaining system installed and accepted, and the vertical limit as measured from the bottom of the exposed face of the wall system to the top of the retained earth behind the system. The measurement for temporary earth retaining system which is used as a common wall for staged construction will be the horizontal payment limit shown on the plans and the greater vertical dimension of the common wall face.

No measurement will be made of end extensions or returns necessary for the safety of the retained facility. Earth retaining system ordered left in place by the Engineer shall be measured in accordance with "Earth Retaining System Left in Place."

Earth retaining systems left in place solely at the Contractor's option, and with the Engineer's permission, will not have an additional payment.

7.16.05—Basis of Payment: Payment for this work will be made at the Contract unit price per square foot (square meters) for "Temporary Earth Retaining System" which price shall include all design, materials, equipment and labor incidental to the construction and removal of the temporary earth retaining system required at the locations specified on the plans; including removal of obstructions, repair and correction, adjustments or reconstruction required by the plans. Any common earth retaining system required for staged construction will be measured for payment only once.

Pay Item	Pay Unit
Temporary Earth Retaining System	s.f. (s.m)

CONNECTICUT
SUPPLEMENTAL SPECIFICATION
SECTION 7.17
EARTH RETAINING SYSTEM LEFT IN PLACE

Add the following Section:

SECTION 7.17
EARTH RETAINING SYSTEM LEFT IN PLACE

7.17.01—Description
7.17.02—Vacant
7.17.03—Construction Methods
7.17.04—Method of Measurement
7.17.05—Basis of Payment

7.17.01—Description: This specification covers only that portion of the temporary earth retaining system that may be ordered left in place by the Engineer or designated in the plans to be left in place.

7.17.02—Vacant

7.17.03—Construction Methods: The Contractor shall submit plans showing the proposed method of construction prior to the start of such construction to the Engineer for approval.

7.17.04—Method of Measurement: Earth retaining system material left in place will be measured for payment by the square foot (square meter). This area will be measured or computed from the horizontal and vertical payment limits shown on the plans or as ordered. If no payment limits are shown on the plans, the limits used for payment will be the actual horizontal limit of temporary earth retaining system ordered or designated in the plans to be left in place, and the vertical limit will correspond to the method of measurement of the temporary earth retaining system.

Temporary earth retaining system left in place solely at the Contractor's option, and with the Engineer's permission, will not be measured for payment.

7.17.05—Basis of Payment: Payment for this work will be made as follows:

That portion of the temporary earth retaining system ordered or designated in the plans to be left in place will be paid for at the Contract unit price per square foot (square meter) for "Earth Retaining System Left in Place" applying to one or more structures or portions of structures, which price shall include only the cost of material left in place. All other expenses shall be paid for under the item "Temporary Earth Retaining System."

Pay Item	Pay Unit
Earth Retaining System Left in Place	s.f. (s.m)

CONNECTICUT
SUPPLEMENTAL SPECIFICATION
SECTION 7.25
BAGGED STONE

Delete the entire section.

CONNECTICUT
SUPPLEMENTAL SPECIFICATION
SECTION 8.11
CONCRETE CURBING

Delete the entire section and replace it with the following:

SECTION 8.11
CONCRETE CURBING

8.11.01—Description
8.11.02—Materials
8.11.03—Construction Methods
8.11.04—Method of Measurement
8.11.05—Basis of Payment

8.11.01—Description: This item shall consist of concrete curbing, furnished in accordance with the dimensions and details of the plans, and installed to the lines and grades shown on the plans.

8.11.02—Materials: The concrete for cast-in-place curbing shall be Class "F" concrete meeting the pertinent requirements of Section M.03.

Precast curb shall meet the requirements of Subarticle M.08.02-4.

Joint filler shall meet the requirements of Subarticle M.03.08-2.

If required, base material shall meet the requirements of Section M.02.

8.11.03—Construction Methods: Construction methods for concrete curbing shall meet the requirements of Article 6.01.03, as supplemented by the following:

1. Excavation: Excavation shall be made to the required depth, and the base upon which the curbing is to be set shall be compacted to a firm, even surface.
2. Section Lengths: All curbing sections shall have uniform length of approximately 10 ft (3 m), unless otherwise directed. The length of straight curb sections may be varied slightly where necessary for closures, but no section less than 6 ft (2 m) long will be permitted.

   Curbing set on a radius of 100 ft (30 m) or less shall be constructed in accordance with the details on the plans.
3. Cast-In-Place Curbing**:** Concrete shall be placed in clean forms on a moist, firm, unfrozen base.

   The concrete shall be placed and finished to a smooth, even surface.

   As an exception to Article 6.01.03, where forms are used, they shall be so constructed that the form for exposed faces may be removed before the concrete has taken final set in order to permit finishing.
4. Precast Concrete Curbing: A mound of concrete, as shown on the plans, shall be placed at all joints.
5. Backfilling: The grading shall be completed to the lines shown on the plans, or as ordered, by refilling to the required elevation with approved material which shall be placed in layers of not over 6 in (150 mm) deep and shall be thoroughly compacted.
6. Openings: Where indicated on the plans, or directed, openings shall be made through the curbing at the elevations and of the size required.

8.11.04—Method of Measurement: This work will be measured for payment along the top of the curb and will be the actual number of linear feet (meters) of concrete curbing completed and accepted.

8.11.05—Basis of Payment: Payment for this work will be made at the Contract unit price per linear foot (meter) for "Concrete Curbing" of the type specified, complete in place, which price shall include all materials, equipment, tools and labor incidental thereto; the unit price shall also include all excavation, backfilling, disposal of surplus material and openings related to this item.

There will be no direct payment for furnishing, placing and compacting base material, but the cost of this work shall be considered as included in the general cost of the work.

Pay Item	Pay Unit
Concrete Curbing (Type)	l.f. (m)

CONNECTICUT
SUPPLEMENTAL SPECIFICATION
SECTION 8.13
STONE CURBING

Delete the entire section and replace it with the following:

SECTION 8.13
STONE CURBING

8.13.01—Description
8.13.02—Materials
8.13.03—Construction Methods
8.13.04—Method of Measurement
8.13.05—Basis of Payment

8.13.01—Description: This item shall consist of stone curbing, furnished in accordance with the dimensions and details of the plans, and installed to the lines and grades shown on the plans.

8.13.02—Materials: The stone curbing shall meet the requirements of Article M.12.06.

Mortar shall meet the requirements of Article M.11.04.

If required, base material shall meet the requirements of Section M.02.

8.13.03—Construction Methods:

1. Excavation: Excavation shall be made to the required depth and the base upon which the curbing is to be set shall be compacted to a firm, even surface.
2. Installing Stone Curbing: The curbing shall be set on edge and settled into place to the line and grade required, straight and true for the full depth. A mound of concrete, as shown on the plans, shall be placed at all joints. The joints of the stone curbing shall be pointed with mortar for the full depth of the curbing. At approximately 50-ft (15 m) intervals, a 1/2-in (12 mm) joint shall not be filled with mortar but left free for expansion. The ends of the stone curbing at driveways and intersections shall be cut at a bevel or rounded, as directed by the Engineer.
3. Backfilling: The grading shall be completed to the lines shown on the plans, or as ordered, by refilling to the required elevation with approved material which shall be placed in layers of not over 6 in (150 mm) in depth and thoroughly compacted.
4. Openings: Where indicated on the plans, or directed, openings shall be made through the curbing at the elevations and of the size required

8.13.04—Method of Measurement: This work will be measured for payment along the top of the curb and will be the actual number of linear feet (meters) of stone curbing or curved stone curbing installed and accepted.

Curbing set on a radius of 100 ft (30 m) or less will be measured for payment as “Curved Stone Curbing.”

8.13.05—Basis of Payment: Payment for this work will be made at the Contract unit price per linear foot (meter) for "Stone Curbing" or "Curved Stone Curbing," of the type, size and kind specified, complete and accepted in place, which price shall include all materials, equipment, tools and labor incidental thereto, and all excavation, backfilling,

disposal of surplus material and all openings.

There will be no direct payment for furnishing, placing and compacting base material, beveling or rounding the ends of the curbing and pointing the joints with mortar, but the cost of this work shall be considered as included in the general cost of the work.

Pay Item	Pay Unit
Stone Curbing (Type-Size)	l.f. (m)
Curved Stone Curbing	l.f. (m)

CONNECTICUT
SUPPLEMENTAL SPECIFICATION
SECTION 8.22
TEMPORARY PRECAST CONCRETE BARRIER CURB

8.22.02—Materials:

In the second sentence of the third paragraph, change “reflective” *to* “retroreflective.”

8.22.04—Method of Measurement:

Add the following sentence to the end of the second paragraph:

“ Relocation of Temporary Precast Concrete Barrier Curb for access to the work area or for the convenience of the Contractor shall be considered incidental to Maintenance and Protection of Traffic and will not be measured for payment.”

CONNECTICUT
SUPPLEMENTAL SPECIFICATION
SECTION 9.07
BARWAYS

Delete the entire article.

CONNECTICUT
SUPPLEMENTAL SPECIFICATION
SECTION 9.10
METAL BEAM RAIL

9.10.02—Materials:

Change Subarticles 1 and 2 as follows:

“ 1. Chemical anchoring material shall meet the requirements of Article M.03.07.
2. Metal beam rail delineators shall meet the requirements of Article M.18.09 and Article M.18.13.”

9.10.04—Method of Measurement:

1. Metal Beam Rail (Type):

Delete the only sentence and replace with the following:

“ The length of metal beam rail measured for payment will be the number of linear feet (meters) of accepted rail of the type or designation installed, including radius rail other than Curved Guide Rail Treatment, measured along the top of rail between centers of end posts in each continuous section.”

CONNECTICUT
SUPPLEMENTAL SPECIFICATION
SECTION 9.18
THREE CABLE GUIDE RAILING
(I-BEAM POSTS) AND ANCHORAGES

9.18.02—Materials:

In the second sentence of the only paragraph, change “reflective” *to* “retroreflective.”

9.18.03 – Construction Methods:

In the 10th paragraph, replace “MIL” *with* “MILSPEC.”

CONNECTICUT
SUPPLEMENTAL SPECIFICATION
SECTION 9.21
CONCRETE SIDEWALKS

Delete the entire Section and replace it with the following:

SECTION 9.21
CONCRETE SIDEWALKS AND RAMPS

9.21.01—Description
9.21.02—Materials
9.21.03—Construction Methods
9.21.04—Method of Measurement
9.21.05—Basis of Payment

9.21.01—Description: This item shall consist of concrete sidewalks and ramps constructed on a gravel or reclaimed miscellaneous aggregate base course in the locations and to the dimensions and details shown on the plans or as ordered and in accordance with these specifications.

9.21.02—Materials: Materials for this work shall conform to the requirements of Section M.03 for Class “F” Concrete.

Gravel or reclaimed miscellaneous aggregate for base shall conform to Article M.02.01 for granular fill.

Detectable warning strips shall be prefabricated detectable warning tile chosen from the Department’s Qualified Products List for retrofit or cast in place applications.

9.21.03—Construction Methods:

1. **Excavation:** Excavation, including removal of any existing sidewalk (bituminous or concrete) and curbing, shall be made to the required depths below the finished grade, as shown on the plans or as directed. All soft and yielding material shall be removed and replaced with suitable material.

When connecting new concrete sidewalk to a section of existing concrete sidewalk, the connection point shall be at the nearest joint in the existing sidewalk.

The Contractor shall establish the limits required to achieve grades for each ramp prior to removal of existing sidewalk and ramps. The Contractor shall document and notify the Engineer of any control points that may conflict with the design grades or configuration of ramps shown on the plans. Control points can be but are not limited to ROW, utility poles, drainage structures, buildings, fences, walls or other features found near the proposed ramp. When control points are encountered within the limits of the ramp, the Engineer will determine if an alternative ramp type is required or the ramp is to be constructed as shown on the plans.

2. **Gravel or Reclaimed Miscellaneous Aggregate Base:** The gravel or reclaimed miscellaneous aggregate base shall be placed in layers not to exceed 6 inches (150 millimeters) in depth and to such a depth that after compaction it shall be at the

specified depth below the finished grade of the walk. The base shall be wetted and rolled or tamped after the spreading of each layer.

3. Forms: Forms shall be of metal or wood, straight, free from warp and of sufficient strength to resist springing from the pressure of the concrete. If made of wood, they shall be of 2-inch (38-millimeter) surfaced plank except that at sharp curves thinner material may be used. If made of metal, they shall be of an approved section and have a flat surface on the top. Forms shall be of a depth equal to the depth of the sidewalk. Forms shall be securely staked, braced and held firmly to the required line and grade and shall be sufficiently tight to prevent leakage of mortar. All forms shall be cleaned and oiled or wetted before concrete is placed against them. Sheet metal templates 1/8 inch (3 millimeters) in thickness, of the full depth and width of the walk, shall be spaced at intervals of 12 feet (4 meters) or as directed. If the concrete is placed in alternate sections, these templates shall remain in place until concrete has been placed on both sides of the template. As soon as the concrete has obtained its initial set, the templates shall be removed.

4. Concrete: The concrete shall be proportioned, mixed, placed, etc., in accordance with the provisions of Section 6.01 for Class “F” Concrete. Concrete shall be cured in accordance with the provisions of Article 4.01.03 for Concrete Pavement.

5. Finishing: The surface of the concrete shall be finished with a wood float or by other approved means. The outside edges of the slab and all joints shall be edged with a 1/4-inch (6-millimeter) radius edging tool. Each slab shall be divided into 2 or more sections by forming dummy joints with a jointing tool as directed.

6. Backfilling and Removal of Surplus Material: The sides of the sidewalk shall be backfilled with suitable material thoroughly compacted and finished flush with the top of the sidewalk. All surplus material shall be removed and the site left in a neat and presentable condition to the satisfaction of the Engineer.

7. Detectable Warning Strip: The detectable warning strip for new construction shall be set directly in poured concrete and each tile shall be weighted down to prevent the tile from floating after placement in wet concrete in accordance with curing procedures. Install detectable warning strip, according to the plans and the Manufacturer’s specifications, or as directed by the Engineer.

The detectable warning strip for retrofit construction shall be installed according to the plans in the direction of pedestrian route and contained wholly within painted crosswalk when present. Its installation shall conform to all manufacturer’s requirements.

9.21.04—Method of Measurement: This work will be measured for payment as follows:

1. Concrete Sidewalk or Sidewalk Ramp: This work will be measured by the actual number of square feet (square meters) of completed and accepted concrete sidewalk or ramp.

2. Excavation: Excavation below the finished grade of the sidewalk or ramp, backfilling, and disposal of surplus material will not be measured for payment, but the cost shall be included in the price bid for the sidewalk or ramp. Excavation above the finished grade of the sidewalk or ramp will be measured and paid for in accordance with Section 2.02

3. Gravel or Reclaimed Miscellaneous Aggregate Base: This work will not be measured for payment, but the cost shall be considered as included in the price bid for the sidewalk or ramp.

4. **Detectable Warning Strip:** For new construction (cast in place), the detectable warning strip will be measured for payment by the actual number of each ramp where a detectable warning strip has been installed and accepted regardless of the number of tiles installed.

5. **Retrofit Detectable Warning Strip:** For retrofit construction (surface applied), the detectable warning strip will be measured for payment by the actual number of each ramp where a detectable warning strip has been installed and accepted regardless of the number of tiles installed.

6. **Construction Staking:** The establishment of control points and limits of grading will be measured in accordance with the item Construction Staking.

9.21.05—Basis of Payment: Construction of a concrete sidewalk or ramp will be paid for at the Contract unit price per square foot (square meter) for "Concrete Sidewalk," or “Concrete Sidewalk Ramp” complete in place, which price shall include all excavation as specified above, backfill, disposal of surplus material, curb removal and any monolithic or separately cast sidewalk curb when required for the sidewalk ramp as shown on the plans, gravel or reclaimed miscellaneous aggregate base, equipment, tools, materials and labor incidental thereto.

A new detectable warning strip will be paid for at the Contract unit price for each ramp where the detectable warning strip has been installed complete in place. This price shall include all tiles, materials, equipment, tools and labor incidental thereto.

Retrofitting the existing concrete sidewalk with a detectable warning strip will be paid for at the Contract unit price for each ramp where the retrofit detectable warning strip has been installed complete in place. This price will include all tiles, saw cutting concrete, adhesive, drilling holes for fasteners, materials, equipment, tools and labor incidental there to.

The establishment of control points and limits of grading will be paid for in accordance with the item Construction Staking.

Pay Item	Pay Unit
Concrete Sidewalk	s.f. (s.m)
Concrete Sidewalk Ramp	s.f. (s.m)
Detectable Warning Strip	ea. (ea.)
Retrofit Detectable Warning Strip	ea. (ea.)

CONNECTICUT
SUPPLEMENTAL SPECIFICATION
SECTION 9.22
BITUMINOUS CONCRETE SIDEWALK
BITUMINOUS CONCRETE DRIVEWAY

9.22.03—Construction Methods:

Replace the first paragraph with the following:

“ **1. Excavation:** Excavation, including saw cutting, removal of any existing sidewalk, or driveway, shall be made to the required depth below the finished grade, as shown on the plans or as directed by the Engineer. All soft and yielding material shall be removed and replaced with suitable material.”

9.22.05—Basis of Payment:

Replace the only paragraph with the following:

“ This work will be paid for at the contract unit price per square yard (square meter) for "Bituminous Concrete Sidewalk" or "Bituminous Concrete Driveway," as the case may be, complete in place, which price shall include all saw cutting, excavation as specified above, backfill, disposal of surplus material, gravel or reclaimed miscellaneous aggregate base, and all equipment, tools, labor and materials incidental thereto.”

CONNECTICUT
SUPPLEMENTAL SPECIFICATION
SECTION 9.41
SERVICE BRIDGES

Delete the entire article.

CONNECTICUT
SUPPLEMENTAL SPECIFICATION
SECTION 9.44
TOPSOIL

9.44.03—Construction Methods:

Replace the first paragraph with the following:

"The Contractor shall submit to the Engineer a Certified Test Report at least 15 calendar days prior to delivery. Any material delivered to the Project, which does not meet specifications or which has become mixed with undue amounts of subsoil during any operation at the source or during placing and spreading, will be rejected and shall be replaced by the Contractor with acceptable material. Any material that is delivered to the Project which does not meet the proper pH requirements for that soil, as specified in Section M.13, must be corrected during spreading."

In the second and third paragraphs, replace "the topsoiled area" *with* "the finished area(s)."

9.44.05—Basis of Payment:

Delete the following:

"Payment for this work will be made as follows:

1. **Furnishing and Placing Topsoil: "**

CONNECTICUT
SUPPLEMENTAL SPECIFICATION
SECTION 9.45
WILDFLOWER ESTABLISHMENT

Delete the entire article.

CONNECTICUT
SUPPLEMENTAL SPECIFICATION
SECTION 9.49
FURNISHING, PLANTING and MULCHING
TREES, SHRUBS, VINES and GROUND COVER PLANTS

9.49.03—Construction Methods:

After the first paragraph under Subarticle "1. Planting Season" *replace the next four paragraphs with the following:*

"**Deciduous Material**
Spring: March 1st to May 31 except for balled and burlapped material, the planting of which will terminate on June 15th.
Fall: From October 15th until the ground freezes. Such plant items, as may be designated elsewhere in the Contract, shall be planted in the Spring planting season only.
Evergreen Material
Spring: March 1st to June 30th.
Fall: August 15th to October 31st."

Change the first two sentences of Subarticle "3. Layout" *as follows:*

" **Layout:** Plant material locations and bed outlines will be staked on the Project Site by the Engineer-Designer or designee in the presence of the Contractor, or the Contractor's representative, before any plant pits or beds are excavated. The Contractor shall request the staking of the plant layout at least 48 hours, excluding weekends and holidays, prior to the date desired to have the layout staked."

Replace Subarticle "5. Pits" *with the following:*

"**5. Pits:** The pit diameters shall be twice the diameter of the root-spread or container diameters, and shall be 2 in (50 mm) less than the height of the rootball measured from the bottom of the ball to the root collar. (i. e. A 12 in (300 mm) measurement between the root collar and the bottom of the rootball will require a 10 in (250 mm) deep pit). Any excavation in excess of that required shall be replaced with planting soil and compacted to the satisfaction of the Engineer."

Add the following sentence to Subarticle "6. Obstructions Below Ground:"

"If removal of obstructions results in a deeper hole than needed for planting, backfill material shall be added and compacted to the satisfaction of the Engineer."

Replace Subarticle "7. Preparation of Backfill" *with the following:*

"**7. Backfill:** Backfill shall meet the requirements of M.13.01 for Planting Soil."

Replace Subarticle "8. Setting Plants" *with the following:*

"**8. Setting Plants:** All plants shall be plumb and at a level that is 2-in (50 mm) higher than the surrounding ground. Backfill material for all plants shall be thoroughly and properly settled by firming or tamping. Thorough watering shall accompany backfilling. Saucers capable of holding water shall be formed at individual plants (exclusive of plant beds) by placing ridges of planting soil around each, or as directed by the Engineer.

a. Balled and Burlapped plants: Plants shall be handled in such manner so that the soil will not be loosened from the roots inside of the ball until the plant is in its final position. If wire baskets are used, the Contractor shall cut all of the horizontal wires in the top 2/3 of the root ball and bend down or remove the top 1/3 of the wire basket so new roots can grow unobstructed in a horizontal direction. Carefully place the plant into the prepared pits and backfill with planting soil to 1/2 the depth of the pit, thoroughly tamp to the satisfaction of the Engineer around the ball. Fill the remaining area of the pit with water. Once water has completely drained, loosen and remove the top 1/3 of the burlap. Remove excess soil to expose the root structure, and cut away any small feeder or girdling roots. Roots that have been wrapped around the ball within the burlap shall be straightened and the remainder of the pit filled with planting soil tamped to ensure that no air pockets remain.

b. Container Grown Plants: Carefully remove the plant from the container over the prepared pits. Gently loosen the soil and straighten all roots as naturally as possible. Place into the bottom of the pit. Backfill with planting soil to 1/2 the depth of the pit. Thoroughly tamp to the satisfaction of the Engineer. Fill remaining area of the pit with water. Once water has completely drained fill the remainder of the pit with planting soil tamped to ensure that no air pockets remain.

c. Bare-roots Plants: Carefully spread roots as naturally as possible and place into the bottom of the pit. All broken or frayed roots shall be cleanly cut off. Backfill with planting soil to 1/2 the depth of the pit. Thoroughly tamp to the satisfaction of the Engineer. Fill remaining area of the pit with water. Once water has completely drained fill the remainder of the pit with planting soil tamped to ensure that no air pockets remain."

Replace Subarticle "10. Watering" *with the following:*

"**10. Watering:** All plants shall be watered upon setting and as many times thereafter as conditions warrant.

The following is a guide for minimum requirements:

Trees:

2 ½" Caliper and less – Fifteen (15) gallons each.
3" to 5" Caliper – Twenty (20) gallons each.
5 ½" Caliper and above – Twenty-five (25) gallons each.

Shrubs:

24" and less – Six (6) gallons each.
More than 24"- Ten (10) gallons each.

Vines, Perennials, and Ornamental Grasses – Three (3) gallons each.
Groundcovers and Bulbs – Two (2) gallons per square foot.

Water shall be applied at a controlled rate and in such a manner to ensure that the water reaches the root zone (saucer) of the plant or plant bed and does not run off to adjacent areas. Watering shall be applied in a manner that does not dislodge plants, erode soil or mulch, or cause damage to saucer.

The Contractor may use slow-release, drip irrigation bags for watering in accordance with manufacturer's instructions. The use of these portable/temporary irrigation bags will require the approval of the Engineer.

Overhead hydro-seeder spray nozzles shall not be used as watering devices."

Replace Subarticle "17. Establishment Period" *with the following:*

"**17. One-Year Establishment Period:** All plant material shall be subject to a One-Year Establishment Period. During this time, the Contractor shall use currently accepted horticultural practices to keep all plant material installed in a healthy, vigorous growing condition at the date of final acceptance. The date of final acceptance shall be 1 full calendar year following the satisfactory completion of the planting activities as confirmed by the Engineer.

An inspection will be held 1 year from the date of installation with the Contractor, Engineer, and Landscape Designer to determine the acceptability of the plant establishment. An inventory of losses and rejected materials will be made and corrective and necessary clean up measures will be determined at the plant inspection."

CONNECTICUT
SUPPLEMENTAL SPECIFICATION
SECTION 9.50
TURF ESTABLISHMENT

Change the title of the Section as follows:

SECTION 9.50
TURF ESTABLISHMENT
EROSION CONTROL MATTING

9.50.01—Description:

Replace the last sentence with the following:

" The work shall also include the installation of erosion control matting, as shown on the plans or where designated by the Engineer, consisting of mulch and netting woven together as a unit."

9.50.02—Materials:

Replace the entire article with the following:

" **9.50.02 – Materials:** Seed shall meet the requirements of Article M.13.04.
Fertilizer shall meet the requirements of Article M.13.03.
Mulch shall meet the requirements of Article M.13.05.
Erosion control matting, if required, shall be from the Department's Qualified Products List and shall meet the requirements of Article M.13.09."

9.50.03—Construction Methods:
1. Preparation of the Seedbed:

After the first sentence in Subarticle (a) "Level areas, medians, interchanges and lawns," *add the following sentence:*

" All disturbed soil areas at final grade shall be seeded within 7 days, or as directed by the Engineer, in accordance with these specifications."

Replace the entire paragraph of Subarticle (b) "Slope and Embankment Areas" *with the following:*

" These areas shall be made friable and receptive to seeding by disking or by other approved methods which will not disrupt the line and grade of the slope surface. In no event will seeding be permitted on hard or crusted soil surface."

2. Seeding Season:

Replace the entire Subarticle with the following:

“ The optimal calendar dates for seeding are:
Spring—March 15 to June 30
Fall—August 15 to October 30
All disturbed soil areas at final grade shall be seeded within 7 days, in accordance with these specifications.
Any seeding outside the optimal dates shall be performed in the same manner. Since acceptable turf establishment is less likely, the Contractor shall be responsible for reseeding until the turf stand conforms to 9.50.03-5.
Any reseeding shall be at no additional cost to the State.”

3. Seeding Methods:

Replace the entire Subarticle with the following:

“ The grass seed mixture shall be applied by any agronomically acceptable procedure. The rate of application shall be no less than 175 lb./ac (195 kg/hectare).
Fertilizer shall be initially applied at a rate of 320 lb./ac (360 kg/hectare) during or preceding seeding. When wood fiber mulch is used, it shall be applied in water slurry at a rate of 2,000 lb./ac (2250 kg/hectare) with or immediately after the application of seed, fertilizer and limestone (if required). When the grass seeding growth has attained a height of 6 in (150 mm), the specified areas designated herein shall be mowed to a height of 3 in (75 mm). Following mowing, all seeding grass areas (mowed and un-mowed) shall receive a uniform application of fertilizer hydraulically placed at the rate of 320 lb./ac (360 kg/hectare).”

4. Compaction:

*Replace the Subarticle heading “***Compaction:”** *with* **“Disturbance:”**

Replace the last sentence with the following:

“ Where any disturbance has occurred, the Contractor shall rework the soil to make a suitable seedbed; then re-seed and mulch such areas with the full amounts of the specified materials, at no additional cost to the State.”

5. Stand of Perennial Turf Grasses:

Replace the entire Subarticle with the following:

“ The Contractor shall provide and maintain a uniform stand of established turf grass species having attained a height of 6 in (150 mm) consisting of no less than 60% coverage per square foot throughout the seeded areas until the entire Project has been accepted. Reseeding required to achieve and maintain a uniform stand of established turf grass species shall be at no additional cost to the State.”

6. Establishment:

Replace the first paragraph of the Subarticle with the following:

“ The Contractor shall keep all seeded areas free from weeds and debris, such as stones, cables, baling wire, and may be required to mow at its own expense, on a 1-time-only basis, all slopes 4:1 or less (flatter) and level turf established (seeded) areas to a height of 4 in (75 mm) when the grass growth attains a height of 6 in (150 mm), or as directed by the Engineer.

7. Erosion Control Matting:

Replace the first sentence of the Subarticle with the following sentence:

“ Erosion control matting shall be installed following seeding where called for on the plans or as directed by the Engineer. Staples shall be installed as per manufacturer's recommendations. Where 2 lengths of matting are joined, the end of the up-grade strip shall overlap the down-grade strip per the manufacturer’s recommendations.”

9.50.04—Method of Measurement:

In the first paragraph, change the first sentence as follows:

“ This work will be measured for payment by the number of square yards (square meters) of surface area of accepted established perennial turf grass.”

9.50.05—Basis of Payment:

In the second paragraph, change “Erosion Control Matting” *to* “Erosion Control Matting (Type).”

In the Pay Item – Pay Unit table, change “Erosion Control Matting” *to* “Erosion Control Matting (Type).”

CONNECTICUT
SUPPLEMENTAL SPECIFICATION
SECTION 9.70
TRAFFICPERSON

Delete the entire Section and replace it with the following:

SECTION 9.70
TRAFFICPERSON

9.70.01—Description
9.70.02—Vacant
9.70.03—Construction Methods
9.70.04—Method of Measurement
9.70.05—Basis of Payment

9.70.01—Description: Under this item the Contractor shall provide the services of Trafficpersons of the type and number, and for such periods, as the Engineer approves for the control and direction of vehicular and pedestrian traffic in areas affected by Project operations. Trafficpersons' services which have not been requested or approved by the Engineer, but which have been obtained by the Contractor solely to meet its operational plans or needs, will not be approved for payment.

9.70.02—Vacant

9.70.03—Construction Methods: Prior to the start of Project operations which require the use of Trafficpersons, a meeting will be held with the Contractor, the Engineer, any relevant Trafficperson agency or firm, and, if applicable, State Police, to review Trafficperson operations, lines of responsibility, and operating guidelines for the Project. The Contractor shall provide a copy of each pertinent municipality's billing rates for Municipal Police Officers and their vehicles, as applicable, to the Engineer prior to the start of Project construction.

On a weekly basis, the Contractor shall inform the Engineer of its scheduled operations for the following week and the number of Trafficpersons it proposes to use for those operations. The Engineer will review the proposal and, if it is acceptable to him, approve the type and number of Trafficpersons to be used. In the event of an unplanned, emergency, or short-term operation, the Engineer may approve the temporary use of properly-clothed persons for traffic control until such time as an authorized Trafficperson may be obtained for that work. In no case shall such temporary use exceed 8 hours for any particular operation.

If the Contractor changes or cancels any scheduled operation without any prior notice of same as may be required by the agency providing the Trafficpersons, the Contractor will be responsible for payment, at no cost to the Department, of any show-up cost charged by said agency for affected Trafficpersons who would have been used if not for the pertinent change or cancellation. Exceptions, as approved by the Engineer, may be granted for adverse weather conditions and unforeseeable causes beyond the control, and not involving the fault or negligence, of the Contractor.

Trafficpersons assigned to a work Site shall take direction only from the Engineer.

Trafficpersons shall wear a high-visibility safety garment compliant with OSHA, MUTCD, and ASTM Standards; and the safety garment shall have the words "Traffic

Control" printed and clearly visible on the front and rear panels (minimum letter size 2 in) of the garment. Worn or faded safety garments that are no longer highly visible shall not be used. At the direction of the Engineer, the Contractor must replace any such garments at no cost to the State.

A Trafficperson shall assist in implementing the traffic control as specified in the item “Maintenance and Protection of Traffic” contained elsewhere in the Contract, or as otherwise directed by the Engineer. Any use of a Trafficperson for Project operations in a manner that conflicts with requirements of the Maintenance and Protection of Traffic specification must have been authorized in writing by the Engineer.

Trafficpersons shall consist of the following types:

1. Municipal Police Officers: Uniformed Municipal Police Officers shall be sworn Municipal Police Officers or Uniformed Constables employed by the Municipality in which the Project is located, who perform criminal law enforcement duties for the Municipality. Law enforcement personnel shall wear the high-visibility safety garment provided by their law enforcement agency. If no high-visibility safety garment is provided by said agency, the Contractor shall provide the law enforcement personnel with a garment meeting the requirements stated below for a Uniformed Flagger’s garment.

Law Enforcement Personnel may also be used for conducting motor vehicle enforcement operations in and around work areas as directed or approved by the Engineer.

Their services will also include their use of an official Municipal Police vehicle when so requested by the Engineer. Uniformed Municipal Police Officers must not be used on limited access highways. If Uniformed Municipal Police Officers are unavailable for a given Project task, other Trafficpersons may be used if so authorized in writing by the Engineer. Uniformed Municipal Police Officers and requested Municipal Police vehicles will be used at such locations and for such periods as the Engineer deems necessary for the control of traffic operations and for the safety of motorists passing through sites affected by Project operations.

2. Uniformed Flagger: Uniformed Flaggers shall be persons who have successfully completed flagger training by the American Traffic Safety Services Association (ATSSA), National Safety Council (NSC), or other such training approved by the Engineer. A copy of the Flagger’s training certificate shall be provided to the Engineer before the Flagger performs any Project work. The credentials and conduct of Uniformed Flaggers shall comply with the requirements of Chapter 6E, Flagger Control in the Manual of Uniformed Traffic Control Devices (MUTCD). Uniformed Flaggers shall wear high-visibility safety apparel and use a STOP/SLOW paddle that is at least 18 in (450 mm) wide with letters at least 6 in (150 mm) high. The paddle shall be mounted on a pole of sufficient length to be 6 ft (1.8 m) above the ground as measured from the bottom of the sign. Uniformed Flaggers shall be used only on non-limited access highways for the purpose of controlling traffic operations and only when authorized to do so in writing by the Engineer.

9.70.04—Method of Measurement: Services of Trafficpersons will be measured for payment by the actual number of hours for each person rendering services approved by the Engineer. These services shall include only such Trafficpersons as are employed within the limits of construction, right of way of the Project, or along detours authorized by the Engineer in order to assist public travel through areas affected by Project construction. Trafficperson services employed due to use of a detour or bypass beyond the limitations approved by the Engineer, or in connection with movement of construction vehicles or equipment, or at locations where traffic has been unnecessarily restricted by the Contractor’s method of operation, will not be measured for payment.

Trafficpersons shall not work more than 12 hours in any one 24-hour period. If such services are essential for more than 12 hours in such period, for a use approved by the Engineer, additional Trafficpersons engaged by the Contractor to meet that circumstance shall be measured for payment. If a Trafficperson used with the Engineer's authorization is an employee on the Contractor's payroll, payment under the item "Trafficperson (Uniformed Flagger)" will be made only for those hours when said employee is performing Trafficperson services.

No travel time will be measured for payment for Uniformed Municipal Police Officers or Uniformed Flaggers.

Mileage fees associated with Trafficperson services will not be measured for payment.

Safety garments and STOP/SLOW paddles will not be measured for payment.

9.70.05—Basis of Payment: Trafficpersons will be paid in accordance with the schedule described herein.

There will be no direct payment for safety garments or STOP/SLOW paddles. All costs associated with furnishing safety garments and STOP/SLOW paddles will be considered included in the general cost of the item.

1. Uniformed Law Enforcement Personnel: The sum of money for this item shown on the Estimate and in the itemized proposal as "Estimated Cost" for this work will be considered the bid price, even though payment will be made as described below. The estimated cost figure is not to be altered in any manner by the bidder. Should the bidder alter the amount shown, the altered figures will be disregarded and the original price will be used in determining the total amount for the Contract.

The Department will pay the Contractor its actual costs for "Trafficperson (Municipal Police Officer)" plus an additional 5% as reimbursement for the Contractor's administrative expense in connection with the services provided. The 5% markup will be paid when the Engineer receives from the Contractor cancelled check(s) or receipted invoice(s) as proof of its pertinent payments.

The invoice must include a breakdown of each officer's actual hours of work and actual rate applied. Mileage fees associated with Trafficperson services are not reimbursable expenses and are not to be included in the billing invoice. The use of a Municipal police vehicle authorized by the Engineer will be paid at the actual rate charged by the Municipality. Upon receipt of the invoice from the Municipality, the Contractor shall forward a copy of it to the Engineer. No payment on such an invoice will be made until and unless the Engineer has reviewed the invoice and approved the payment. The rate charged by the Municipality for use of a Uniformed Municipal Police Officer or a Municipal police vehicle shall not be greater than the rate that the Municipality normally charges others for similar services.

2. Uniformed Flagger: Uniformed Flaggers will be paid for at the Contract unit price per hour for "Trafficperson (Uniformed Flagger)," which price shall include all compensation, insurance benefits and any other cost or liability incidental to the furnishing of the Trafficperson services authorized under the Contract or approved by the Engineer.

Pay Item	Pay Unit
Trafficperson (Municipal Police Officer)	est.
Trafficperson (Uniformed Flagger)	hr.

CONNECTICUT
SUPPLEMENTAL SPECIFICATION
SECTION 9.73
SAFETY PATROL SERVICE

Delete the entire article.

CONNECTICUT
SUPPLEMENTAL SPECIFICATION
SECTION 9.75
MOBILIZATION

Delete the entire Section and replace with the following:

SECTION 9.75
MOBILIZATION AND PROJECT CLOSEOUT

9.75.01—Description: This item consists of

1. all work necessary for moving Project personnel and equipment to the Project Site;
2. all work necessary for the establishment of the Contractors' field offices, buildings and other facilities necessary for Contract performance;
3. the preparation of work plans and other documents that must be submitted by the Contractor to the Department prior to the start of physical Project construction. These initial submittals are identified elsewhere in the Contract and may include Project schedules, Project management plans, staging and storage areas, safety plans, quality control plans, erosion and sedimentation control plans, and other documents addressing general Project sequencing or management;
4. demobilization of plant and equipment;
5. completion of all physical work, and
6. completion of administrative closeout items as required by the Contract.

The work entailed in this item shall not be subcontracted in whole or part.

9.75.04—Method of Measurement: This work will be measured for payment in the manner described hereinafter; however, the total Contract amount earned will not include payments for mobilization that were earned during the period covered by the current monthly estimate, but will include those payments for mobilization that were previously earned and certified for payment.

1. When the first Project payment estimate is reviewed by the Engineer, 25% of the lump sum bid price for this item or 2.5% of the total original Contract price, whichever is less, will be certified for payment as a part of that estimate.
2. When the Contractor's initial Project submittals are accepted by the Engineer, 50% of the lump sum bid price for this item or 5% of the total original Contract price, whichever is less, minus any previous Project payments made to the Contractor for this item, will be certified for payment.
3. When the Contractor's initial Project submittals are accepted by the Engineer, and 15% of the total original Contract price has been earned by the Contractor, 70% of the lump sum price of this item or 7% of the total original Contract price, whichever is less, minus any previous Project payments made to the Contractor for this item, will be certified for payment.
4. When 30% of the total original Contract price has been earned by the Contractor, 85% of the lump sum price of this item or 8.5% of the total original Contract price, whichever is less, minus any previous payments made to the Contractor for this item, will be certified for payment.
5. When the requirements of Article 1.08.13 have been satisfied by the Contractor, 95% of the lump sum price of this item, minus any previous payments made to the Contractor for this item, will be certified for payment.
6. When the requirements of Article 1.08.14 have been satisfied by the Contractor, 100% of the lump sum price of this item, minus any previous payments made to the Contractor for this item, will be certified for payment. When this payment is made, the Contractor should have received full Contract payment for this item.

Nothing herein shall be construed to limit or preclude the Department from making partial payments to the Contractor that are provided for elsewhere in this Contract.

9.75.05—Basis of Payment: The work under this item will be paid for at the Contract lump sum price for "Mobilization and Project Closeout," which price shall include materials, equipment, tools, transportation, labor and all work incidental thereto.

Payment for this item shall be made only once; *i.e.*, for only one instance of mobilization as described in Article 9.75.01 above. If the Contractor mobilizes equipment or facilities more than one time during the course of the Project, due to reasons solely the responsibility of the Department, the additional work entailed therein will be paid for as Extra Work under Section 1.04.05 hereof.

Pay Item	Pay Unit
Mobilization and Project Closeout	l.s. (l.s.)

CONNECTICUT
SUPPLEMENTAL SPECIFICATION
SECTION 9.77
TRAFFIC CONE

9.77.02—Materials:

Change the end of the last sentence as follows:

“ Traffic cones used at night shall be reflectorized by utilizing Type VI or Type IX Retroreflective Sheeting, in accordance with Article M.18.09.”

Add the following paragraph after the only paragraph:

“ Prior to using traffic cones on the project, the Contractor shall submit to the Engineer a copy of the manufacturer’s self-certification that the traffic cones comply with the requirements of the NCHRP Report 350 or the AASHTO MASH for Category 1 Devices.”

CONNECTICUT
SUPPLEMENTAL SPECIFICATION
SECTION 9.78
TRAFFIC DRUM

9.78.02—Materials:

Delete the second and third paragraph and replace with the following:

“ Type IX Retroreflective Sheeting, in accordance with Article M.18.09, shall be used on traffic drums. Only one type sheeting shall be used on a drum and all drums furnished on a construction project shall be manufactured with the same type retroreflective sheeting.

Prior to using traffic drums on the project, the Contractor shall submit to the Engineer a copy of the manufacturer’s self-certification that the traffic drums comply with the requirements of the NCHRP Report 350 or the AASHTO MASH for Category 1 Devices.”

CONNECTICUT
SUPPLEMENTAL SPECIFICATION
SECTION 9.79
CONSTRUCTION BARRICADES

9.79.01—Description:

Delete the entire article and replace with the following:

"**9.79.01—Description:** Under this item the Contractor shall furnish all construction barricades of the specified type required on the Project to comply with the requirements of NCHRP Report 350 (TL-3), or the AASHTO MASH, and the requirements stated in the item "Maintenance and Protection of Traffic," as shown on the plans and as directed by the Engineer."

9.79.02—Materials:

Change the second sentence as follows:

" The frame shall be of polyvinyl chloride pipe meeting the requirements of ASTM D2241 for PVC 1120 or 1220, SDR 21 (pressure rating 200 psi (1380 kPa)); ASTM D3034, SDR 35 or an approved equal. All straight members shall be the color white."

Delete the last two paragraphs and replace with the following four paragraphs:

" Alternate stripes of white and orange Type IV or Type IX retroreflective sheeting shall be applied to the horizontal members as shown on the plans. Only 1 type sheeting shall be used on a barricade and all barricades on a construction project shall be constructed with the same type of retroreflective sheeting. Retroreflective sheeting shall meet the requirements of Article M.18.09.

Construction barricades shall be designed and fabricated so as to prevent them from being blown over or displaced by wind. Construction barricades shall be approved by the Engineer before they are placed into service.

Materials Certificates shall be required confirming compliance with the requirements set forth in the plans and specifications for these barricades.

Prior to using barricades on the Project, the Contractor shall submit to the Engineer a copy of the Letter of Acceptance issued by the FHWA to the manufacturer documenting that the barricades comply with the requirements of NCHRP Report 350 (TL-3) or the AASHTO MASH for Category 2 Devices."

9.79.03—Construction Methods:

Delete the second paragraph in its entirety.

Delete the last two paragraphs and replace with the following:

“ Ineffective barricades, as determined by the Engineer and in accordance with ATSSA guidelines contained in “Quality Standards for Work Zone Traffic Control Devices,” shall be replaced by the Contractor at no cost to the State.

Barricades that are no longer required shall be removed from the Project and shall remain the property of the Contractor.”

CONNECTICUT
SUPPLEMENTAL SPECIFICATION
SECTION 9.80
CONSTRUCTION STAKING

Delete the entire Section and replace with the following:

SECTION 9.80
CONSTRUCTION STAKING

9.80.01—Description: The work under this item shall consist of construction layout and reference staking necessary for the proper control and satisfactory completion of work on the Project, however establishment of Property lines, highway lines, or non-access lines shall not be deemed work under this item.

This item shall also include all construction layout and reference staking required for identifying construction features within 25 ft (7.625 m) of regulated areas, and for the proper placement of all relocated underground and aerial utilities.

9.80.02—Materials: Stakes used for control staking shall be a minimum of 1 in x 1 in (25 mm x 25 mm) in width and a minimum of 18 in (0.5 m) in length. Stakes shall be legibly marked and shall be visible from the edge of the travelway, and shall be durable enough to last for the duration of the Contract. In areas where traditional staking cannot be established, other materials or methods may be used to mark critical locations, as approved or directed by the Engineer. For slope limits, pavement edges, gutter lines, etc., where so-called "green" or "working" stakes are commonly used, lesser quality stakes will be acceptable, provided that the stakes are suitable for the intended purpose

9.80.03—Construction Methods: The Department will furnish the Contractor such control points, bench marks, and other data as may be necessary for the construction staking and layout by qualified engineering or surveying personnel as noted elsewhere herein.

The Contractor shall be responsible for the placement and preservation of adequate ties to reference points necessary for the accurate re-establishment of base lines, center lines and at all critical locations, including all line-striping and grooving for line-striping, and grades as shown on the plans or directed by the Engineer.

Stakes, references, and batter boards required for construction operations, signing and traffic control shall be furnished, set and properly referenced by the Contractor. The Contractor shall be solely and completely responsible for the accuracy of the line and grade of all features of the work. The Contractor shall call to the Engineer’s attention immediately any errors or apparent discrepancies found in previous surveys, plans, specifications or special provisions for correction or interpretation prior to proceeding with the affected work.

During roadway construction (or Site work), the Contractor shall provide and maintain for the appropriate periods, as determined by the Engineer, reference stakes at maximum 100-ft (30-m) intervals outside the slope limits. Further, the Contractor shall provide and maintain reference stakes at 50-ft (15-m) intervals immediately prior to and during the formation of subgrade and the construction of subsequent pavement layers.

These stakes shall be properly marked as to station and offset, and shall be referenced to the proposed grade.

Wetland Areas: When identified in the Contract, the Contractor shall provide additional reference stakes to assist the Engineer and regulatory personnel in the duties at regulated areas, including inland wetlands, tidal wetlands and watercourses. The Contractor shall place additional reference stakes to identify all slope limits, culvert ends, endwalls, riprap areas and other construction features within 25 ft (7.625 m) of regulated areas. For the placement of these additional stakes the regulated areas, approximate slope limits and other construction features are those shown on the environmental permit plates included in the Contract, or the latest revisions available. The Contractor shall provide stakes at a maximum spacing of 50 ft (15 m). Each stake shall be marked in a manner acceptable to the Engineer, to identify the baseline station and offset, and the feature it represents. The Contractor shall maintain or replace these stakes until the Engineer approves their removal.

Utility Relocations: The Contractor shall provide additional reference stakes to assist the Engineer and public utility personnel to accurately identify the proposed locations for utility facilities to be relocated. At least two weeks prior to the scheduled relocation of public utilities, the Contractor shall stake out the following features throughout the limits of utility relocations:

1. The proposed edge of road on the side adjacent to the proposed utility relocations.
2. Both edges of proposed sidewalks, where shown on the plans.

The Contractor shall provide stakes at a maximum spacing of 25 ft (7.625 m), unless directed otherwise by the Engineer.

The Contractor shall provide and maintain reference stakes at structures such as drainage structures, and shall include additional reference stakes for the determination of the structure alignments as may be needed for the proper construction of the drainage or other structure. The reference stakes shall be placed immediately prior to, and maintained during, the installation of the drainage structure. These stakes shall be properly marked as to station and offset, and shall be referenced to the proposed grade.

The Contractor shall furnish to the Engineer copies of any data used in setting and referencing stakes and other layout markings used by the Contractor after completion of each related operation, if requested to do so by the Engineer.

The Contractor shall provide safe facilities for convenient access by Department forces to all survey stakes, control points, batter boards, and references when requested to do so by the Engineer.

All staking shall be performed by qualified engineering or surveying personnel trained, experienced and skilled in construction layout and staking of the type required under the Contract. Prior to the start of related work, the Contractor shall submit to the Engineer for review and comment the qualifications of personnel responsible for construction staking on the Project. The submission shall include a description of the experience and training that the proposed personnel possesses and a list of State projects that the personnel have worked on previously. On all bridge projects, surveying shall be performed under the direct supervision of a Professional Surveyor licensed in the State of Connecticut. All field layout and staking required for the Project shall be performed under the direct supervision of a person, or persons, with engineering background, experienced in the direction of such work and acceptable to the Engineer. If the personnel responsible for construction staking should change during the course of the

Project, a revised submittal will be required prior to the Contractor's being allowed access to the Site.

The Department may check the control of the work, as established by the Contractor, at any time. The Contractor will be informed of the results of these checks, but the Department, by so doing, in no way relieves the Contractor of responsibility for the accuracy of the layout work. The Contractor shall correct or replace, at the Contractor's own expense, any deficient layout and construction work that may result from inaccuracies in the Contractor's staking operations from its failure to report such inaccuracies found in work done by the Department or by others. If, as a result of such inaccuracies, the Department is required to make further studies, redesign, or both, the Department will deduct all expenses incurred by the Department in doing so from any monies it owes to the Contractor.

The Contractor shall furnish all necessary personnel, surveying instruments, engineering equipment and supplies, materials, transportation, and work incidental to the accurate and satisfactory completion of work under this item.

For roadways where the existing pavement markings need to be reestablished or grooved markings are to be used: Prior to any resurfacing or obliteration of existing pavement markings, the Contractor and a representative of the Engineer must establish and document pavement marking control points from the existing markings. These control points shall be used to reestablish the positions of the lanes, the beginnings and endings of tapers, channelization lines for on- and off-ramps, lane-use arrows, stop bars, driveways, private drives, road entrances, and any lane transitions in the Project area, including all line striping grooving. The Contractor shall use these control points to provide appropriate premarking prior to the installation of final markings, including grooves.

The Contractor shall provide and maintain reference stakes or markings at 100-ft (30-m) intervals immediately off the edge of pavement, so that the Contractor will later be able to reestablish the existing pavement markings and necessary line stripe grooving limits. The Contractor shall also provide and maintain additional reference stakes and/or markings at any point where there is a change in pavement markings, so that the Contractor will later be able to reestablish the existing pavement markings and grooving limits.

For non-limited access roadways: On non-limited access roadways the Contractor may need to adjust the final locations of the pavement marking or grooving limits in light of a need to accommodate pedestrian and bicycle traffic. Prior to any resurfacing or obliteration of existing pavement markings, the Contractor, the Engineer, and a representative from the Division of Traffic Engineering must establish and document pavement marking control points from the existing marking and grooving limits as described above. The control points at that time may be adjusted to provide wider shoulders while maintaining through travel lane widths of no less than 11 ft (3.3 m). Suggested lane/shoulder widths for commonly encountered half sections are shown in the table below.

Centerline to curb or edge of road	Lane width	Shoulder width
12 to 16 ft (3.6 to 4.9 m)	11 ft (3.3 m)	Remaining Pavement
17 to 20 ft (5.2 to 6.1 m)	12 ft (3.6 m)	Remaining Pavement

9.80.04—Method of Measurement: Construction staking will be measured for payment as a Contract lump sum item.

9.80.05—Basis of Payment: Construction staking will be paid for at the Contract lump sum price for "Construction Staking," which price shall include all maintenance, materials, tools, equipment, labor and work incidental thereto, including removal of materials. The Contractor shall submit to the Department a schedule of payment values for review and comment prior to payment.

Pay Item	Pay Unit
Construction Staking	l.s. (l.s.)

CONNECTICUT
SUPPLEMENTAL SPECIFICATION
SECTION 9.81
42 INCH (1 METER) TRAFFIC CONE

9.81.01—Description:

Delete the only sentence and replace with the following:

“ This item shall consist of furnishing 42-inch (1.07-meter) retroflective traffic cones required on the Project to meet the requirements of the traffic control plans, as stated in the item "Maintenance and Protection of Traffic," as shown on the plans or as directed by the Engineer.”

9.81.02—Materials:

Delete the last two paragraphs and replace with the following:

“ Retroflective stripes shall be fabricated from Type IX retroflective sheeting. All stripes shall be of one type of sheeting. Retroflective sheeting shall conform to Article M.18.09. Prior to using traffic cones on the Project, the Contractor shall submit to the Engineer a copy of the manufacturer’s self-certification that the traffic cones comply with the requirements of NCHRP Report 350 or the AASHTO MASH for Category 1 Devices.”

9.81.03-Construction Methods:

In the first sentence, change “manufacturers” to “manufacturer’s.”

CONNECTICUT
SUPPLEMENTAL SPECIFICATION
SECTION 10.00
GENERAL CLAUSES FOR HIGHWAY ILLUMINATION AND TRAFFIC SIGNAL PROJECTS

Add the following new article after **10.00.13 Service Installations:**

" 10.00.14- Maintenance of Illumination During Construction: The Contractor shall organize the Project work so that any portion of roadway which has existing roadway illumination and is open for use remains lighted. The Contractor shall also provide illumination on all temporary crossovers, ramps and roadways that are constructed as part of staged construction and that are open for use. Highway illumination may consist of: existing lighting, new lighting, temporary lighting, or any combination thereof. It is the Contractor's responsibility to stage the installation or relocation of service cabinets, poles, lights, and circuitry so that all roadways of the kind described above remain lighted. If it is necessary to install temporary poles, lights, or circuitry to maintain the integrity of the highway illumination system, such work shall be submitted to the Engineer for approval prior to installation, and will be paid for at the Contract bid unit price for the relevant items. Temporary illumination work not specifically covered by the Contract specifications and pay items will be paid for as extra work at the discretion of the Engineer.

If the Contract includes temporary illumination plans, those plans shall serve as a framework for providing roadway illumination during construction. Temporary illumination plans may not represent the full extent of the temporary illumination work required, or the exact quantity of temporary lights required to maintain proper roadway illumination.

Prior to the start of any work that will interfere with the existing lighting system, the Contractor and ConnDOT District Electrical Maintenance personnel shall inspect the system for lighting outages, pole knockdowns, and circuit malfunctions. Deficiencies will be noted and repaired by Department forces prior to the start of work by the Contractor.

Once the Contractor's work interferes with or impacts the existing roadway lighting system, maintenance of that system within the Project limits becomes the Contractor's responsibility. The repair of lighting system malfunctions occurring outside of the project limits, caused by the Contractor's work, shall also be the Contractor's responsibility. District Construction personnel will note the start and end date of the Contractor's responsibility for maintenance of any existing lighting system.

The Contractor shall maintain the illumination throughout the duration of the Project, until the Project is accepted by the State. The Contractor shall supply to the Project Engineer and to the ConnDOT District Electrical Maintenance Supervisor, the names and phone numbers of a primary and back-up representative, to be contacted should a problem with the lighting system occur.

Whoever discovers a lighting outage or pole damage/knockdown within the Project limits shall immediately notify ConnDOT Highway Operations of same as follows:

1. For projects in Districts 1, 2, and 4, call (860) 594-3447.
2. For projects in District 3 and along the Interstate 95 corridor within District 2, call (203) 696-2690.

The following procedures will be followed for lighting outages:

1) Once notified of a lighting outage, ConnDOT Electrical Maintenance personnel will assess the situation, and in the case of a pole knockdown, may clear the pole from the roadway and make safe any exposed wires.

2) The Project Inspector and the Contractor's designated representative shall be notified after the lighting outage has been assessed by ConnDOT Electrical Maintenance, transferring responsibility for further repairs to the Contractor.

3) Upon notification, the Contractor shall be responsible to repair the lighting system before the normal nighttime turn-on of the lights. If this cannot be achieved, the Contractor shall make the lighting operational prior to the next normal nighttime turn-on of the lights, up to a maximum of 24 hours from the time the Contractor was notified of the problem. The Contractor shall contact the Project Inspector to discuss the situation, the steps to be taken to bring the lighting back on line, and the time frame for doing so.

4) For isolated individual luminaire outages (not a continuous circuit), the Contractor shall repair such luminaires within 48 hours from the time that the Contractor became aware of the outage.

The Contractor shall follow standard "lock-out," "tag-out," and "Call Before You Dig" procedures when working on the lighting circuit. Both the Contractor and ConnDOT Electrical Maintenance shall have mutual access to active lighting control cabinets.

The Contractor will be reimbursed for any costs associated with the maintenance of the existing lighting system that are beyond the Contractor's control. Reimbursements will be for damage caused by the general public and normal system age related component failures (such as lamp burn-out, ballast/starter failure or cable splice failure). However, the Contractor shall be responsible for repair of damage to the existing lighting system incurred as the result of their operations including damage caused by improper wiring methods. All repairs or replacements due to the Contractor's operations shall be made by the Contractor at their expense.

The Project Inspector will maintain a log book of any lighting repair work performed, which will include a description of the repairs, and the date the work was performed. The log book will be made accessible to ConnDOT Electrical Maintenance personnel.

Temporary illumination circuitry shall consist of pre-assembled aerial cable of the type and size as indicated in the Contract documents or as directed by the Engineer.

The Contractor shall notify the Engineer when aerial cable cannot be installed due to construction activities and shall suggest another method for installation of the cable.

Alternate options may include installing cable in duct underground, or installing surface-mounted cable in duct or PVC conduit with cable along the backside of a bridge parapet or temporary concrete barrier curbing. Temporary cable in duct/conduit or aerial cable lying directly on the ground will not be allowed. The option of surface-mounting duct or conduit to the backside of a parapet or barrier will be allowed only when construction activities make it necessary, and where the surface-mounted conduit will not expose workers to a high voltage hazard. The Contractor must obtain the Engineer's approval to do so prior to installing temporary circuitry not installed overhead, unless otherwise indicated on the plans.

When temporary circuitry is installed in trench, standard warning tape procedures shall be followed as set forth in Article 1.05.15. When temporary circuitry is surface mounted to the backside of a parapet or barrier wall, the Contractor shall install warning placards which read: "Live Electricity." Warning placards shall be installed at the beginning, end, and at intermittent points 100 feet (30 meters) apart along the exposed length of the duct/conduit. All temporary lighting circuits shall include a continuous No. 8 bare copper grounding conductor connected to all light standards and effectively grounded as per the NEC."

CONNECTICUT
SUPPLEMENTAL SPECIFICATION
SECTION 10.01
TRENCHING AND BACKFILLING

10.01.01- Description:

In the only sentence of the first paragraph after "…satisfactory…" *add the following:* "clean-up and".

In the only sentence of the second paragraph after "…reconstruction of…" *add the following:* "bituminous, concrete and granite curbing,".

10.01.05- Basis of Payment:

In the only sentence of the second paragraph after "…mulching…" *add the following:* "clean-up and". *After* "…installing…" *add the word* "curbing,".

At the end of the third paragraph, add the following: "In the absence of a "Rock in Trench Excavation" item, the work will be compensated as extra work."

In the only sentence of the sixth paragraph, after "…unit price for 'Concrete Sidewalk'…" *add the following:* "or as extra work, if no unit price has been established."

CONNECTICUT
SUPPLEMENTAL SPECIFICATION
SECTION 10.10
CONCRETE HANDHOLE

10.10.02 – Materials:

Replace “M.03.01” *with* “M.03” *for both Class A and Class C Concrete.*

10.10.05 – Basis of Payment

In the first sentence, remove the words “ground wire”.

At the end of the paragraph add the following sentence:

“The ground wire (bonding wire) is included in the Contract unit price under Section 10.08 – Electrical Conduit.”

Add the word “Cover” *to the end of the pay item* “Cast Iron Handhole”

CONNECTICUT
SUPPLEMENTAL SPECIFICATION
SECTION 12.04
SIGN PANEL OVERLAY

12.04.02—Materials:

Replace the second through fourth sentences with the following:

" Primer shall meet the requirements of A-A-2336.
The enamel paint to be used for the finish coat shall be as specified in Article M.18.08.
Copy shall meet the requirements contained in M.18.09 or M.18.10, as specified in the Contract."

12.04.03—Construction Methods:

Replace the entire article with the following:

" **12.04.03—Construction Methods:** The plywood overlay shall completely cover the existing sign including the exit crown panel. The plywood sheets shall be joined together to form a single overlay by means of 1 in x 4 in (25 mm x 100 mm) construction grade fir wood battens securely fastened to adjoining panels with 1 in (25 mm) galvanized wood screws. The battens shall be fastened to the Grade C back face of the overlay.
Before assembly and before painting, all wood shall be treated with a coat of wood preservative on all surfaces. The wood preservative shall be of a type which will have no adverse effect on paint adhesion and will not cause future paint discoloration.
The entire overlay surface shall be painted with 1 coat of primer and 1 coat of enamel. The plywood shall remain in place for the duration of the Project.
All work fabricating and clamping the plywood sign panel overlay shall be done to ensure that no damage occurs to the existing sign."

CONNECTICUT
SUPPLEMENTAL SPECIFICATION
SECTION 12.07
SIGN FACE – EXTRUDED ALUMINUM

*Change the Section title from "***Sign Face – Extruded Aluminum (Type III Reflective Sheeting)***" to "***Sign Face – Extruded Aluminum***."*

12.07.01—Description:

In the first sentence, change "reflective" *to* "retroreflective."

12.07.03—Construction Methods:

In the first sentence of the second paragraph, change "Reflective" *to* "Retroreflective."

In the second sentence of the second paragraph, change "reflective" *to* "retroreflective."

After the last paragraph, add the following:

" All overhead sign foundations shall be field staked. The locations of the stakes shall be accepted by an Engineer from the Division of Traffic Engineering, a minimum of seven (7) days prior to installation.

For all side mounted signs, the edge of the sign closest to the roadway and the sign foundation shall be field staked and accepted by an Engineer from the Division of Traffic Engineering, a minimum of seven (7) days prior to installation.

For side-mounted signs, the offset to the near edge of the sign face shall exceed the maximum deflection of the guide rail, unless otherwise shown on the plans or directed by the Engineer."

12.07.05—Basis of Payment:

In the Pay Item – Pay Unit table, delete "(Type IV Reflective Sheeting)."

CONNECTICUT
SUPPLEMENTAL SPECIFICATION
SECTION 12.08
SIGN FACE – SHEET ALUMINUM

12.08.01—Description:

Delete the only paragraph and replace with the following:

" This item shall consist of furnishing and installing sign face-sheet aluminum signs of the type specified, metal sign posts, span-mounted sign brackets and mast arm-mounted sign brackets at locations indicated on the plans or as ordered and complying with the requirements of the plans and these Specifications."

12.08.02—Materials:

Delete the entire article and replace with the following:

" Retroreflective sheeting shall meet the requirements of Article M.18.09, Type IV or IX.
Sheet aluminum sign blanks shall meet the requirements of Article M.18.13.
Silk screening of Type IV or IX retroreflective sheeting shall meet the requirements specified by the retroreflective sheeting manufacturer.
Metal sign posts shall meet the requirements of Article M.18.14.
Sign mounting bolts shall meet the requirements of Article M.18.15."

12.08.03—Construction Methods:

In the first sentence of the first paragraph, change "... shall conform to ...*" to "*...shall be as shown in ...*"*

In the second, third and fourth sentences of the first paragraph, change "reflective" *to* "retroreflective."

*In the third and fourth sentences of the first paragraph, change "*Type III reflective*" to "*Type IV or IX retroreflective*."*

*In the first sentence of the second paragraph, change "*Reflective*" to "*Retroreflective*."*

*In the second sentence of the second paragraph, change "*reflective*" to "*retroreflective*."*

*In the first sentence of the third paragraph, change "*Type I, Type II or Type III reflective*" to "*Type IV or IX retroreflective*."*

*In the first and second sentences of the third paragraph, change "*reflective*" to "*retroreflective*."*

In the last sentence of the third paragraph, change "Type I or Type II reflective" *to* "Type IV or IX retroreflective."

Delete the last sentence of the last paragraph.

12.08.05—Basis of Payment:

In the only paragraph, delete "… or parapet mounted sign support …"

CONNECTICUT
SUPPLEMENTAL SPECIFICATION
SECTION 12.10
EPOXY RESIN PAVEMENT MARKINGS, SYMBOLS AND LEGENDS

Change the Name of the Section as Follows:

SECTION 12.10
EPOXY RESIN PAVEMENT MARKINGS

12.10.03—Construction Methods:

Delete subarticle 3. "Performance and Warranty" *and replace it with the following:*

" **3. Initial Performance:** The retroreflectivity of the markings applied must be measured by the Contractor 3 to 14 days after installation. A Certified Test Report (CTR), in accordance with Article 1.06.07, must be submitted to the Engineer no later than 10 days after the measurements are taken using the procedures and equipment detailed below:

Test Lots - The following test lots will be randomly selected by the Engineer to represent the line markings applied:

TABLE 12.10.03-3.1: Line Test Lots

Length of line	Number of Lots	Length of Test Lot
< 1.0 mi (1610 m)	1	1000 ft. (300 m)
≥1.0 mi (1610 m)	1 per 1.0 mi (1610 m)	1000 ft. (300 m)

Measurement Equipment and Procedure

Portable Retroreflectometer

1. Skip line measurements shall be obtained for every other stripe, taking no more than 2 readings per stripe with readings no closer than 20 in (500 mm) from either end of the marking.
2. Solid line test lots shall be divided into 10 sub-lots of 100 ft (30 m) length and measurements obtained at 1 randomly select location within each sublot.
3. For symbols and legends, 10% of each type shall be measured by obtaining 5 measurements at random locations on the symbol or legend.
4. The Apparatus and Measurements shall be made in accordance with ASTM E1710 (Standard Test Method for Measurement of Retroreflective Pavement Marking Materials with CEN-Prescribed Geometry Using a Portable Retroreflectometer) and evaluated in accordance with ASTM D7585 (Standard Practice for Evaluating Retroreflective Pavement Markings Using Portable Hand-Operated Instruments).

Mobile Retroreflectometer

1. Calibration of the instruments shall be in accordance with the manufacturer's instructions.
2. Retroreflectivity shall be measured in a manner proposed by the Contractor and approved by the Engineer. The basis of approval of the test method will be

conformance to a recognized standard test method or provisional standard test method.

The measurements shall be obtained when the pavement surface is clean and dry and shall be reported in millicandelas per square foot per foot candle - mcd/ft^2/fc (millicandelas per square meter per lux – mcd/m²/lx). Measurements shall be obtained sequentially in the direction of traffic flow.

Additional Contents of Certified Test Report

The CTR shall also list:

1. Project and Route number
2. Geographical location of the test site(s), including distance from the nearest reference point
3. Manufacturer and model of retroreflectometer used
4. Most recent calibration date for equipment used
5. Grand Average and standard deviation of the retroreflectivity readings for each line, symbol or legend

Initial Performance:

In order to be accepted, all epoxy resin pavement markings must meet the following minimum retroreflectivity reading requirement:

White Epoxy: minimum retroreflectivity reading of 400 mcd/ft^2/fc (mcd/m²/lx)

Yellow Epoxy: minimum retroreflectivity reading of 325 mcd/ft^2/fc (mcd/m²/lx)

At the discretion of the Engineer, the Contractor shall replace, at its expense, such amount of lines, symbols and legends that the grand average reading falls below the minimum value for retroreflectivity. The Engineer will determine the areas and lines to be replaced. The cost of replacement shall include all materials, equipment, labor and work incidental thereto.

4. Crosswalks: Only glass beads meeting the requirements of Grading “A” (smaller beads) shall be applied at a rate of 25 lb/gal (3 kg/l) of epoxy pavement marking material.”

CONNECTICUT
SUPPLEMENTAL SPECIFICATION
SECTION 12.20
CONSTRUCTION SIGNS—
TYPE III REFLECTIVE SHEETING

Delete the entire Section, including "**Type III Reflective Sheeting**" *in the title, and replace it with the following:*

SECTION 12.20
CONSTRUCTION SIGNS

12.20.01—Description: Under this item the Contractor shall furnish, install and remove construction signs with retroreflective sheeting and their required portable supports or metal sign posts that comply with the requirements of NCHRP Report 350 (TL-3) or MASH for Category 2 Devices. The construction signs and their required portable supports or metal sign posts shall comply with the signing requirements stated in the item "Maintenance and Protection of Traffic," as shown on the plans and/or as directed by the Engineer. The Contractor shall furnish a sufficient number of signs to provide the signing patterns for all operations which are being undertaken concurrently.

12.20.02—Materials: Prior to using the construction signs and their portable supports, the Contractor shall submit to the Engineer a copy of the Letter of Acceptance issued by the FHWA to the manufacturer documenting that the devices (both sign and portable support tested together) comply with the requirements of NCHRP Report 350 (TL-3) or MASH for Category 2 Devices.

All sign faces shall be rigid and reflectorized and shall meet the requirements of Article M.18.09. If used as rigid substrate, sheet aluminum sign blanks shall comply with the requirements of Article M.18.13. Metal sign posts shall comply with the requirements of Article M.18.14. Application of retroreflective sheeting, legends, symbols, and borders shall comply with the requirements specified by the retroreflective sheeting manufacturer. Attachments shall be provided so that the signs can be firmly attached to the portable sign supports or metal posts without causing damage to the signs.

12.20.03—Construction Methods: The signs and their portable supports or metal posts shall comply with the requirements as shown on the plans and the latest edition of the "Manual on Uniformed Traffic Control Devices." Drawings of the signs, showing placement and dimensions of legend and border, are available for inspection at the Division of Traffic, Connecticut Department of Transportation.

Various types of portable sign supports may be used. These portable supports shall be fabricated in such a manner as to minimize the possibility of the signs being blown over or displaced by the wind from passing vehicles and are to be of a yielding type to withstand impact with minimal damage to the signs, supports, or vehicles. Portable sign supports shall be approved by the Engineer before they are utilized on the Project. Mounting height of signs on portable sign supports shall be a minimum of 1 ft (0.3 m)

and a maximum of 2 ft (0.6 m), measured from the pavement to the bottom of the sign.

Signs in other than good condition shall be replaced with acceptable signs as determined by the Engineer.

Suitable attachments shall be provided so that the signs can be firmly attached to the portable sign supports or metal posts without causing damage to the signs.

The following types of construction signs shall not be used: mesh, non-rigid, roll-up, corrugated or waffle board types substrates, foam core and composite aluminum sign substrates.

Field Performance: Retroreflective sheeting processed and applied to sign blank materials in accordance with the sheeting manufacturer's recommendations, shall perform effectively for a minimum of three (3) years. The retroreflective sheeting will be considered unsatisfactory if it has deteriorated due to natural causes to the extent that: (1) the sign is ineffective for its intended purpose when viewed from a moving vehicle under normal day and night driving conditions; or (2) the coefficient of retroreflection is less than 100 when measured at 0.2 degree observation angle and -4 degree entrance angle. All measurements shall be made after sign cleaning according to the sheeting manufacturer's recommendations.

Ineffective signs, as determined by the Engineer and in accordance with the ATSSA guidelines contained in "Quality Standards for Work Zone Traffic Control Devices," shall be replaced by the Contractor at no cost to the State.

Signs and their portable sign supports or metal posts that are no longer required shall be removed from the Project and shall remain the property of the Contractor.

12.20.04—Method of Measurement: The work to furnish, install and remove construction signs will be measured for payment by the number of square feet (square meters) of sign face delivered and used on the Project. Sign supports will not be measured for payment.

12.20.05—Basis of Payment: This item will be paid for at the Contract unit price per square foot (square meter) for "Construction Signs," delivered and used on the Project, which price shall include the signs, portable sign supports, metal sign posts and all hardware required to attach the sign to the support or posts. Each sign and support or posts furnished will be paid for once, regardless of the number of times used on the Project.

Pay Item	Pay Unit
Construction Signs	s.f. (s.m)

CONNECTICUT
SUPPLEMENTAL SPECIFICATION
SECTION 18.00
GENERAL CLAUSES -
IMPACT ATTENUATION SYSTEMS

18.00.01—Description:

Change the end of the first sentence "... with the Specifications and in conformity with the Plans or as directed by the Engineer." *to* "… with the plans and Specifications or as directed by the Engineer."

18.00.02—Performance Criteria:

Delete the entire article and replace it with the following:

" These devices shall have approval in writing from FHWA documenting that they comply with the requirements of the NCHRP Report 350 or the AASHTO MASH for Category 3 Devices."

18.00.05—Delineation of Impact Attenuation Systems:

Delete the entire article and replace it with the following:

" All impact attenuation systems shall have an attenuator reflector attached to the front of the system, as shown on the plans."

CONNECTICUT
SUPPLEMENTAL SPECIFICATION
SECTION 18.04
TYPE C AND NC – IMPACT ATTENUATION SYSTEMS

Delete the entire article.

CONNECTICUT
SUPPLEMENTAL SPECIFICATION
SECTION 18.06
TYPE D PORTABLE IMPACT ATTENUATION SYSTEM

18.06.02—Materials:

Delete the first two paragraphs and replace with the following:

“ Prior to using a new TMA, the Contractor shall submit to the Engineer a materials certificate in accordance with Article 1.06.07 for each system supplied and a copy of the FHWA Letter of Acceptance issued to the manufacturer documenting that the device complies with the requirements of the NCHRP Report 350 (TL-3) or the AASHTO MASH for Category 3 Devices.

If the system is not furnished new, the Contractor shall document and demonstrate to the Engineer’s satisfaction that the system complies with the requirements of a new system, NCHRP Report 350 (TL-2), or the AASHTO MASH and may be used until the end of the attenuation device's useful service life.”

In the second sentence of the sixth paragraph, change “Type III retro-reflective” *to* “Type IV retroreflective.”

CONNECTICUT
SUPPLEMENTAL SPECIFICATION
SECTION M.03
PORTLAND CEMENT CONCRETE

Delete the entire Section and replace it with the following:

SECTION M.03
PORTLAND CEMENT CONCRETE

M.03.01 - Component Materials
M.03.02 - Mix Design Requirements
M.03.03 - Producer Equipment and Production Requirements
M.03.04 - Curing Materials
M.03.05 - Non Shrink, Non Staining Grout
M.03.06 - Expansive Cement for Anchoring
M.03.07 - Chemical Anchors
M.03.08 - Joint Materials
M.03.09 - Protective Compound/Sealers
M.03.10 - Formwork

M.03.01 – Component Materials

1. Coarse Aggregate: Coarse aggregate shall be broken stone, gravel, or reclaimed concrete aggregate defined as mortar-coated rock, consisting of clean durable fragments of uniform quality throughout. It shall be free from soft, disintegrated pieces, mud, dirt, organic or other injurious material and shall not contain more than 1 percent of dust by mass, as determined by AASHTO T-11. Coarse aggregate of a size retained on a 1-inch (25 mm) square opening sieve shall not contain more than 8% of flat or elongated pieces, whose longest dimension exceeds 5 times their maximum thickness. Heating or cooling of coarse aggregates may be required to meet concrete mix temperature requirements at time of placement.

(a) Soundness: When tested with magnesium sulfate solution for soundness, using AASHTO Method T 104, coarse aggregate shall not have a loss of more than 10% at the end of 5 cycles.

(b) Loss on Abrasion: When tested by means of the Los Angeles Machine, using AASHTO Method T 96, coarse aggregate shall not have a loss of more than 40%.

(c) Gradation: Grading and stone sizes of the coarse aggregate shall conform to Article M.01.01 as determined by AASHTO T-27. All coarse aggregate proportions shall be approved in advance by the Transportation Division Chief (TDC) as part of the Mix Design requirements.

(d) Storage: Aggregate stockpiles shall be located on smooth, hard, sloped/well-drained areas. Each source and gradation shall have an individual stockpile or bin. Aggregates shall be handled from stockpiles or other sources to the batching plant in such manner as to minimize segregation of the material. Aggregates that have become segregated, or mixed with earth or foreign material, shall not be used.

(e) Reclaimed Concrete Aggregate: In addition to the above requirements (a-d), when reclaimed concrete aggregate is proposed, it shall be tested for chloride in AASHTO T-260 "Sampling and Testing for Chloride Ion in Concrete and Concrete Raw Materials." Aggregate shall not be used if the chloride content as determined from this test exceeds 0.5 pound/cubic yard (297 g/cubic meter). Regardless of chloride content, reclaimed concrete aggregate shall not be used in concrete mixes used for pre-stressed concrete construction.

2. Fine Aggregate: Fine aggregate shall be natural or manufactured sand consisting of clean, hard, durable, uncoated particles of quartz or other rock, free from lumps of clay, soft or flaky material, mica, loam, organic or other injurious material. In no case shall fine aggregate containing lumps of frozen material be used. Heating or cooling of fine aggregates may be required to meet concrete mix temperature requirements at time of placement.

For continued shipments of fine aggregate from a given source, the fineness modulus of any sample shall not vary more than 0.20 from the base fineness modulus. The base fineness modulus for a source shall be established by the Engineer and may be revised based on current testing results.

(a) Fine Material: Fine aggregate shall contain not more than 3% of material finer than a #200 sieve (75µm), as determined by AASHTO T 11.

(b) Organic Impurities: Fine aggregate subjected to the colorimetric test shall not produce a color darker than Gardner Color Standard No. 11, using AASHTO T 21. If the fine aggregate fails to meet this requirement, the provisions of AASHTO M 6, Section 7.2.3, may apply.

(c) Gradation: Fine aggregate gradation shall be within the ranges listed in Table M.03.01-1 for any source. All fine aggregate proportions shall be approved in advance by the TDC as part of the Mix Design requirements.

(d) Soundness: When tested with magnesium sulfate solution for soundness, using AASHTO T 104, fine aggregate shall not have a loss of more than 10% at the end of 5 cycles. Fine aggregate that fails to meet this requirement, but meets all other requirements, may be allowed for use on a restricted basis with the approval of the Engineer on a case-by-case basis. Typically concrete forming any surface subject to polishing or erosion from running water will not be allowed to contain such material.

(e) Storage: Aggregate stockpiles shall be located on smooth, hard, sloped/well-drained areas. Each source and gradation shall have an individual stockpile or bin. Aggregates shall be handled from stockpiles or other sources to the batching plant in such manner as to minimize segregation of the material. Aggregates that have become segregated, or mixed with earth or foreign material, shall not be used.

Table M.03.01-1 TOTAL % PASSING BY WEIGHT

Sieve Size	3/8" (9.5mm)	No. 4 (4.75mm)	No. 8 (2.36mm)	No. 16 (1.18mm)	No. 30 (600µm)	No. 50 (300µm)	No. 100 (150µm)
Percent Passing	100	95-100	80-100	50-85	25-60	10-30	2-10

3. Cement:

(a) Portland: Types I, II, and III Portland cement shall conform to the requirements of AASHTO M 85. Type I and Type III Portland cement shall be used only when required or expressly permitted by the Project specification or the Engineer. The use of Type I or III will require that these mixtures be submitted as Non-standard Mix Designs. All cement shall be provided by a mill participating in the Departments' Cement Certification program. The requirements of the Certification Program are detailed in the Department's Quality Assurance Program for Materials.

(b) Pre-Blended Cements: Binary or Ternary cements consisting of Portland Cement and supplemental cementitious materials may be used provided that all the requirements of Subarticles M.03.01- 3(a) and -3(c) are met.

(c) Replacement Materials: Unless already approved as a Standard Mix Design, any Contractor proposed Mix Designs with partial replacement of Portland Cement (PC) with fly ash or ground granulated blast furnace slag (GGBFS), shall be submitted in writing to the Engineer for approval prior to the start of work, on a project-by-project basis. The type of material, source, and the percentage of the PC replaced shall be clearly indicated. Upon request, a Certified Test Report for the cement replacement material shall be provided to the Engineer for use during the Mix Design review.

1. Fly Ash: Fly ash to be used as a partial replacement for Portland cement shall meet the requirements of AASHTO M 295, either Class C or Class F, including the uniformity requirements of Table 2A. Loss on Ignition for either class of fly ash shall not exceed 4.0%. Fly ash may be used to replace up to a maximum of 20% of the required Portland cement. The fly ash shall be substituted on a weight (mass) basis, with a minimum of 1 pound (45 kg) of fly ash for 1 pound (45 kg) of Portland cement. Different classes of fly ash or the same class from different sources shall not be permitted on any single project without the written approval of the Engineer.
2. Ground Granulated Blast Furnace Slag (GGBFS): GGBFS used as a partial replacement for Portland cement shall conform to the requirements of AASHTO M 302/ASTM C989, Grade 100 or 120. As determined by the Engineer, GGBFS may be used to replace a maximum of 30% of the required Portland cement. The Engineer may restrict or prohibit the use of GGBFS if ambient temperatures anticipated during the placement and initial curing of the concrete are low. The GGBFS shall be substituted on a weight (mass) basis, with a minimum of 1 pound (45 kg) of slag for 1 pound (45 kg) of Portland cement. Different sources of GGBFS shall not be permitted on any single project without the written approval of the Engineer.

4. Water: All water used in the mixing of concrete shall be clear in appearance and free from oil, salt, acids, alkalis, sugar, and organic matter. Surface water may be used if not taken from shallow or muddy sources; classified as Class C or Class D on the Department of Energy and Environmental Protection (DEEP) Water Quality Classification mapping; and accommodations have been made to prevent contaminants from entering the supply to the satisfaction of the Engineer. The Engineer may request that water from any surface or ground source be tested in accordance with AASHTO T26 and AASHTO D512 if the appearance or scent of the water is suspect. To be acceptable, the pH of the water must not be less than 6.0 or greater than 8.0 and Chloride Ion Concentration of the water must not exceed 250ppm (250 mg/L). Potable water taken directly from a municipal or regional water supply may be used for mixing concrete without testing. Heating or cooling of water may be required to meet mix temperature requirements at time of placement.

5. Admixtures: All admixtures shall perform their function without injurious effects upon the concrete. If requested by the TDC, the Contractor shall present a certified statement from a recognized laboratory attesting to this requirement. A "recognized" laboratory is any cement and concrete laboratory approved and inspected regularly by the Cement and Concrete Reference Laboratory (CCRL). The statement shall contain results of compression tests of cylinder specimens made with concrete utilizing the admixture(s) in proportions equal to those proposed by the Contractor. The results of at least 5 standard 6-inch x 12-inch (150 mm x 300 mm) cylinders of each mix design shall be listed with the results of at least 5 like-sized cylinders not utilizing the admixture(s). Specimens must be made and cured in the laboratory in accordance with AASHTO T 126 and will be tested in accordance with AASHTO T 22.

(a) Air-Entraining Admixtures: In the event that air entrained concrete is required, an admixture conforming to the requirements of AASHTO M 154 may be used. Tests for 7 and 28-day compressive and flexural strengths and resistance to freezing and thawing are required, but tests for bleeding, bond strength and volume change will not be required.

(b) Other Chemical Admixtures: In the event that concrete properties are specified that require the use of additional admixtures, or the Contractor proposes the use of additional admixtures to facilitate placement, the admixtures shall conform to the requirements of AASHTO M194M/M, including the 1 year performance data.

M.03.02 – Mix Design Requirements

1. Standard ConnDOT Mix Designs: Standard Mix Designs shall be designed in accordance with applicable sections of ACI 211 and ACI 318. The mixtures shall consist of Portland cement, fine aggregate, coarse aggregate, admixtures[1], and water proportioned in accordance with Table M.03.02-1. The mixtures shall also be designed to obtain the physical properties of plastic concrete as specified in Article 6.01.03.

Table M.03.02-1

TYPE	28-day Minimum Compressive Strength psi (megapascals)	Water / Cement; or Water / Cement plus other approved Cementitious Material, by weight (mass), Maximum	Minimum Cement[2] Required lbs/cy (kg/cm)	Maximum Aggregate Size Required Section M.01.01
Class "A"	3300 (23)	0.53	615 (365)	No. 4
Class "C"	3300 (23)	0.53	658 (390)	No. 6
Class "F"	4400 (30)	0.44	658 (390)	No. 6
Pavement	3500 (24)	0.49	615 (365)	No. 4
Slope Paving	2200 (15)	0.69	455 (270)	No. 3

[1] Approved admixtures may be used in proportions recommended by the manufacturer.

[2] Portland Cement may be partially replaced within a Standard Mix Design by other approved cementitious material meeting the requirements of Article M.03.01-3(b) if permitted by the Engineer.

Mix designs shall indicate the dosage of admixtures anticipated to provide plastic properties required in the Project specification. Properties of standard classes of concrete in the plastic state are listed in Article 6.01.03

Standard Mix Designs are required to be designed and submitted by the concrete producers, and are approved by the Department on a standing basis. Submittal or re-approval of these Standard Mix Designs on an annual basis is not required. Previously approved producer-designed Standard Mixes that have a record of satisfactory performance may be utilized on Department projects unless there is a change in the gravimetric properties or the sources of any materials. Revisions to the Standard Mix Designs, which include changes in component sources, can be submitted at any time to the TDC, but must be approved prior to use on Department projects.

2. Non-Standard ConnDOT Mix Designs: Any proposed Mix Designs that do not comply with Table M.03.02-1 are required to be submitted 15 days prior to use on a project-by-project basis and be approved by the TDC prior to use. The use of an approved admixture with an otherwise approved Standard Mix Design is not considered non-standard.

All Non-standard Mix Designs used for load-bearing structures shall contain a minimum of 658 lbs/cubic yard (390 kg/cubic meter) of cementitious materials.

Concrete used in applications such as flowable fill or controlled low-strength material may be designed with less than 658 lbs/cubic yard (390 kg/cubic meter) of cementitious materials.

M.03.03 - Producer Equipment and Production Requirements

1. General Requirements: The source of the concrete must be approved by the Engineer prior to use on Department projects. Specifically the location and capacity of the central mix or dry batch plant, and complement of truck mixers/haulers, shall be adequate for continuous placement of concrete on a typical Department project. Approval may be revoked at any time in accordance with Section 1.06.01.

(a) Inspection: The production facility supplying hydraulic cement concrete shall have a current Certification of Ready Mixed Concrete Production Facilities from the National Ready Mixed Concrete Association (NRMCA), or equivalent certification approved by the Engineer.

(b) In addition to the requirements of approved third party certification, the facility shall produce batch tickets that conform to Subarticle 6.01.03-3(a).

(c) Quality Control: The Contractor is responsible for all aspects of Quality Control (QC). As determined by the Engineer, should material delivered to a project not meet specification, the Contractor may be required to submit to the Engineer a corrective procedure for approval within 3 calendar days. The procedure shall address any minor adjustments or corrections made to the equipment or procedures at the facility.

(d) Suspension: As determined by the Engineer, repeated or frequent delivery of deficient material to a Department project may be grounds for suspension of that source of material. A detailed QC plan that describes all QC policies and procedures for that facility may be required to formally address quality issues. This plan must be approved by the Engineer and fully implemented, prior to reinstatement of that facility.

2. Hand Mixed Concrete: Hand mixing shall be permitted only with the permission of the Engineer. Hand mixed batches shall not exceed 1/2 cubic yard (0.5 cubic meter) in volume. Hand mixing will not be permitted for concrete to be placed under water.

M.03.04 - Curing Materials

1. Water: Any water source deemed acceptable by the Engineer for mixing concrete may be used to provide water for curing purposes. Surface water may be used if classified as Class C or Class D on the Department of Energy and Environmental Protection (DEEP) Water Quality Classification mapping and accommodations have been made to prevent contaminants from entering the supply to the satisfaction of the Engineer.

In general, water shall not be taken from shallow or muddy sources. In cases where sources of supply are relatively shallow, the intake pipe shall be enclosed to exclude silt, mud, grass, etc.; and the water in the enclosure shall be maintained at a depth of not less than 2 feet (610 mm) under the intake pipe.

2. Mats: Mats for curing concrete shall be capable of maintaining moisture uniformly on the surface of the concrete. The mats shall not contain any materials such as dyes, sugar, etc., that may be injurious to the concrete.

The length or width of the mats shall be sufficient to cover all concrete surfaces being cured. Should more than one mat be required, sufficient overlap shall be provided by the Contractor as determined by the Engineer.

3. Liquid Membrane-Forming Compound: Liquid membrane-forming compound shall conform to the requirements of AASHTO M 148 Type 2, Class B, or shall be a water-soluble linseed oil-based compound conforming to the requirements of AASHTO M 148, Type 2.

4. White Polyethylene Sheeting (Film): White polyethylene sheeting (film) shall conform to the requirements of AASHTO M 171.

M.03.05 - Non Shrink, Non Staining Grout

1. Bagged (pre-mixed): Bagged (pre-mixed) formulations of non-shrink grout shall meet the requirements of ASTM C 1107. The grout shall be mixed with potable water for use. The grout shall be mixed to a flowable consistency as determined by ASTM C 230. All bagged material shall be clearly marked with the manufacturer's name, date of production, batch number, and written instructions for proper mixing, placement and curing of the product.

2. Bulk: The Contractor may formulate and design a grout mix for use on the Project in lieu of using a pre-bagged product. The Contractor shall obtain prior written approval of the Engineer for any such proposed Mix Design. Any such Mix Design shall include the proportions of hydraulic cement, potable water, fine aggregates, expansive agent, and any other necessary additive or admixture. This material shall meet all of the same chemical and physical requirements as shall the pre-bagged grout, in accordance with ASTM C 1107.

M.03.06 – Expansive Cement for Anchoring

The premixed anchoring cement shall be non-metallic, concrete gray in color and prepackaged. The mix shall consist of hydraulic cement, fine aggregate, expansive admixtures and water conforming to the following requirements:

1. The anchoring cement shall have a minimum 24 hour compressive strength of 2,600 psi (18 megapascals) when tested in accordance with ASTM C 109.

2. The water content of the anchoring cement shall be as recommended by the manufacturer. Water shall conform to the requirements of Subarticle M.03.01-4.

The Contractor shall provide a Certified Test Report and Materials Certificate for the premixed anchoring cement in conformance with Article 1.06.07. The Contractor shall also provide, when requested by the Engineer, samples of the premixed anchoring cement for testing and approval.

M.03.07 – Chemical Anchors

Chemical anchor material must be listed on the Departments' Qualified Products List and approved by the Engineer for the specified use.

The chemical anchor material shall be epoxy or polyester polymer resin. It shall not contain any metals or other products that promote corrosion of steel. The Contractor shall supply the Engineer with a Certified Test Report and Materials Certificate for the chemical anchor material in conformance with Article 1.06.07. When requested by the Engineer, the Contractor shall also provide samples of the chemical anchor material.

M.03.08 – Joint Materials

1. Transverse Joints for Concrete Pavement: Transverse joints shall consist of corrosion resistant load transfer devices, poured joint seal and in addition, in the case of expansion joints, expansion joint filler all conforming to the following requirements:

- **(a)** The corrosion resistant load transfer device shall be coated steel or sleeved steel or be made of corrosion resistant material. The dimensions of any devices used shall be as shown on the plans, exclusive of any coating or sleeving. Core material of coated or sleeved metallic devices shall be steel meeting the requirements of AASHTO M 255M/M 255 Grade 520, or steel having equal or better properties and approved by the Engineer. Nonmetallic devices shall meet the various strength requirements applicable to metallic devices as well as all other requirements stated herein.
- **(b)** All coated load transfer devices shall conform to the requirements of AASHTO M 254. Uncoated or sleeved load transfer devices shall meet the applicable physical requirements of AASHTO M 254. The use of field applied bond breakers will not be permitted.

(c) The basis of acceptance for corrosion resistant load transfer devices shall be the submission by the Contractor of a minimum of 2 samples accompanied by Certified Test Reports conforming to the requirements of Article 1.06.07 demonstrating that the load transfer device conforms to the requirements of AASHTO M 254 for the type of device supplied. The Engineer reserves the right to reject any load transfer device which he deems unsatisfactory for use.

2. **Joint Filler for Concrete Curbing:** Expansion joint filler shall be either preformed expansion joint filler or wood joint filler as indicated on the plans and shall conform to the following requirements:
   (a) Preformed expansion joint filler shall be the bituminous cellular type and shall conform to the requirements of AASHTO M 213.
   (b) Boards for wood joint filler shall have 2 planed sides and shall be redwood, cypress or white pine. Redwood and cypress boards shall be of sound heartwood. White pine boards shall be of sound sapwood. Occasional small, sound knots and medium surface checks will be permitted provided the board is free of any defects that will impair its usefulness for the purpose intended. The joint filler may be composed of more than one length of board in the length of the joint, but no board of a length less than 6 feet (1.9 meters) shall be used; and the separate boards shall be held securely to form a straight joint. Boards composed of pieces that are jointed and glued shall be considered as one board.
   (c) Dimensions shall be as specified or shown on the plans; and tolerances of plus 1/16-inch (1.6 millimeters) thickness, plus 1/8-inch (3.2 millimeters) depth and plus 1/4-inch (6.4 millimeters) length will be permitted.
   (d) All wood joint filler boards shall be given a preservative treatment by brushing with creosote oil conforming to AASHTO M 133. After treatment, the boards shall be stacked in piles, each layer separated from the next by spacers at least 1/4 inch (6.4 millimeters) thick; and the boards shall not be used until 24 hours after treatment. Prior to concreting, all exposed surfaces of the wood filler shall be given a light brush coating of form oil.
   (e) Testing of board expansion joint filler shall be in accordance with pertinent sections of AASHTO T 42.
3. **Longitudinal Joint Devices:** The metal used in the fabrication of longitudinal joint devices shall conform to ASTM requirements for each type of metal used. The dimensions shall be as shown on the plans.
4. **Expansion Joint Fillers for Bridges and Bridge Bearings:**
   (a) Preformed expansion joint filler for bridges shall conform to the requirements of AASHTO M 153, Type I or Type II.
   (b) Pre-molded expansion joint filler for bridge bearings shall conform to the requirements of AASHTO M 33.
5. **Joint Sealants:**
   (a) **Joint Sealer for Pavement:** The joint sealer for pavement shall be a rubber compound of the hot-poured type and shall conform to the requirements of AASHTO M 324 Type II unless otherwise noted on the plans or in the special provisions.
   (b) **Joint Sealer for Structures:** Structure joint sealers shall be one of the following type sealants:
      1. Where "Joint Seal" is specified on the plans, it shall conform to the Federal Specifications SS-S-200-E (Self-leveling type), TT-S-0227E (COM-NBS) Type II-Class A (Non-sag type), or 1 component polyurethane-base elastomeric sealants conforming to FS TT-S-00230C Type II-Class A or an approved equal.

         A Certified Test Report will be required in accordance with Article 1.06.07, certifying the conformance of the sealant to the requirements set forth in the Federal Specification. Should the consignee noted on a Certified Test Report be other than the Prime Contractor, a Materials Certificate shall be required to identify the shipment.

2. Where "Silicone Joint Sealant" is specified on the plans, it shall be one of the following or an approved equal:
   - Sealant, manufactured by the Dow Corning Corporation, Midland, Michigan Dow Corning 888 Silicone Joint Sealant or
   - Dow Corning 888-SL Self-Leveling Silicone Joint 48686-0994

6. **Closed Cell Elastomer:** The closed cell elastomer shall conform to the requirements of ASTM D1056, Grade RE-41 B2. The elastomer shall have a pressure-sensitive adhesive backing on one side.

   The Contractor shall deliver the closed cell elastomer to the job site a minimum of 30 days prior to installation. Prior to the delivery of the closed cell elastomer, the Contractor shall notify the Engineer of the date of shipment and the expected date of delivery. Upon delivery of the closed cell elastomer to the job site, the Contractor shall immediately notify the Engineer.

   Each separate length, roll or container shall be clearly tagged or marked with the manufacturer's name, trademark and lot number. A lot is defined as that amount of closed cell elastomer manufactured at one time from one batch of elastomer. A batch is defined as that amount of elastomer prepared and compounded at one time. The Contractor shall furnish a Certified Test Report in accordance with Article 1.06.07, confirming the conformance of the closed cell elastomer to the requirements set forth in these specifications. Should the co-signee noted on a Certified Test Report be other than the Prime Contractor, a Materials Certificate shall be required to identify shipment.

   The Contractor shall furnish a 1 foot (305 millimeter) length of closed cell elastomer in each lot for purposes of inspection and testing by the Engineer. The Engineer will cut a 1 foot (305 millimeter) sample from each lot and inspect the sample for conformance to size, and perform physical tests on the sample as deemed necessary.

   The Engineer shall reject any lot or portion of a lot that does not conform to the requirements stated herein. A rejected lot or portion of a lot may be resubmitted provided the Contractor has removed or corrected, in a manner acceptable to the Engineer, all non-conforming material.

M.03.09 – Protective Compound/Sealers

The brand and type of material must be listed on the Department's Qualified Products List and approved by the Engineer for the specified use.

M.03.10 – Formwork

1. **Stay-in-place Forms:** Material for stay-in-place metal forms shall be made of zinc-coated (galvanized) steel sheet conforming to ASTM Specification A653 (Structural Steel (SS) Grade 33 through 80). The minimum thickness shall be 20 gage (810 micrometers). Coating weight shall conform to ASTM A924, Class G235, and shall otherwise meet all requirements relevant to steel stay-in-place metal forms and the placing of concrete as specified herein and as noted in the Contract documents.

   Form supports shall either be fabricated and conform to the same material requirements as the forms, or be fabricated from structural steel conforming to the requirements of ASTM A36 and shall be hot-dip galvanized in accordance with ASTM A123.

   Lightweight filler material for forms shall be as recommended by the form manufacturer.
2. **Temporary Forms and Falsework:** Forms and Falsework shall be of wood, steel or other material approved by the Engineer. This approval does not relieve the Contractor from employing adequately sized materials of sufficient rigidity to prevent objectionable distortion of the formed concrete surfaces caused by pressure of the plastic concrete and other loads incidental to the construction operations.

CONNECTICUT
SUPPLEMENTAL SPECIFICATION
SECTION M.04
BITUMINOUS CONCRETE

Delete the entire Section and replace it with the following:

SECTION M.04
BITUMINOUS CONCRETE

M.04.01—Bituminous Concrete Materials and Facilities
M.04.02—Mix Design and Job Mix Formula (JMF)
M.04.03—Production Requirements

M.04.01—Bituminous Concrete Materials and Facilities: Each source of material, and facility or plant used to produce and test bituminous concrete must be qualified on an annual basis by the Engineer. Test Procedures and Specifications referenced herein are in accordance with the latest AASHTO and ASTM Standard Test Procedures and Specifications. Such references when noted with an (M) have been modified by the Engineer and are detailed in Table M.04.03-7.

The Contractor shall submit to the Engineer all sources of coarse aggregate, fine aggregate, mineral filler, PG binder, and if applicable any additives such as but not limited to anti-strip, warm mix, and polymer modifiers. The Contractor shall submit a Safety Data Sheet (SDS) for each grade of binder, and additive to be used on the Project. The Contractor shall not change any material sources without prior approval of the Engineer.

An adequate quantity of each size aggregate, mineral filler, bitumen, and additives, shall be maintained at the bituminous concrete plant site at all times while the plant is in operation to ensure that the plant can consistently produce bituminous concrete mixtures that meet the job mix formula (JMF) as specified in Article M.04.02. The quantity of such material shall be reviewed by the Engineer on an individual plant basis and is dependent upon the plant's daily production capacity. A total quantity of any material on site that amounts to less than one day's production capacity may be cause for the job mix formula to be rejected.

1. Coarse Aggregate:

(a) Requirements: The coarse aggregate shall consist of clean, hard, tough, durable fragments of crushed stone or crushed gravel of uniform quality. Aggregates from multiple sources of supply must not be mixed or stored in the same stockpile.

(b) Basis of Approval: The request for approval of the source of supply shall include a washed sieve analysis in accordance with AASHTO T 27. The Gsa, Gsb, and Pw_a shall be determined in accordance with AASHTO T 85. The coarse aggregate must not contain more than 1% crusher dust, sand, soft disintegrated pieces, mud, dirt, organic and other injurious materials. When tested for abrasion using AASHTO T 96, the aggregate loss must not exceed 40%. When tested for soundness using AASHTO T 104 with a magnesium sulfate solution, the coarse aggregate must not have a loss exceeding 10% at the end of 5 cycles.

For all bituminous mixtures, materials shall also meet the coarse aggregate angularity criteria as specified in Tables M.04.02-2 thru M.04.02-4 for blended aggregates retained on the No. 4 sieve when tested according to ASTM D5821. The amount of aggregate particles of the coarse aggregate blend retained on the No. 4 sieve that are flat and elongated shall be determined in accordance with ASTM D4791 and shall not exceed 10% by weight when tested to a 5:1 ratio, as shown in Tables M.04.02-2 to M.04.02-4.

2. Fine Aggregate:

(a) Requirements: The fine aggregate from each source quarry/pit deposit shall consist of clean, hard, tough, rough-surfaced and angular grains of natural sand; manufactured sand prepared from washed stone screenings; stone screenings, slag or gravel; or combinations thereof, after mechanical screening or manufactured by a

process approved by the Engineer. The Contractor is prohibited from mixing two or more sources of fine aggregate on the ground for the purpose of feeding into a plant.

All fine aggregate shall meet the listed criteria shown in items #1 thru #7 of Table M.04.01-1. Table M.04.01-1 indicates the quality tests and criteria required for all fine aggregate sources. Individually approved sources of supply shall not be mixed or stored in the same stockpile. The fine aggregates must be free from injurious amounts of clay, loam, and other deleterious materials.

For Superpave mixtures, in addition to the above requirements, the fine aggregate angularity shall be determined by testing the materials passing the #8 sieve in accordance with AASHTO T 304, Method A. Qualification shall be based on the criteria listed in Tables M.04.02-2 thru M.04.02-4. The fine aggregate shall also be tested for clay content as a percentage contained in materials finer than the #8 sieve in accordance with AASHTO T 176.

TABLE M.04.01-1
Fine Aggregate Criteria by Pit/Quarry Source

Item	Title	AASHTO Protocol(s)	Criteria
1	Grading	T 27 & T 11	100% Passing 3/8 in 95% Passing No. 4 min.
2	Absorption	T 84	3% maximum
3	Plasticity Limits	T 90	0 or not detectable
4	L.A. Wear	T 96	50% maximum (fine aggregate particle size No. 8 and above)
5	Soundness by Magnesium Sulfate	T 104	20% maximum @ 5 cycles
6	Clay Lumps and Friable Particles	T 112	3% maximum
7	Deleterious Material	As determined by the Engineer	Organic or inorganic calcite, hematite, shale, clay or clay lumps, friable materials, coal-lignite, shells, loam, mica, clinkers, or organic matter (wood, etc.) Shall contain no more than 3% by mass of any individual listed constituent and nor more than 5% by mass in total of all listed constituents
8	Petrographic Analysis	ASTM C295	Terms defined in Section M.04.01-2c

(b) Basis of Approval: A Quality Control Plan for Fine Aggregate (QCPFA) provided by the Contractor shall be submitted for review and approval for each new source documenting how conformance to Items 1 through 7 as shown in Table M.04.01-1 is monitored. The QCPFA must be resubmitted any time the process, location or manner of how the fine aggregate is manufactured changes, or as requested by the Engineer. The QCPFA must include the locations and manufacturing processing methods. The QCPFA for any source may be suspended by the Engineer due to the production of inconsistent material.

The Contractor shall submit all test results to the Engineer for review. The Contractor shall also include a washed sieve analysis in accordance with AASHTO T 27/T 11. Any fine aggregate component or final combined product shall have 100% passing the 3/8 in sieve and a minimum of 95% passing the No. 4 sieve. The Gsa, Gsb, and Pw_a shall be determined in accordance with AASHTO T 84.

The Contractor will be notified by the Engineer if any qualified source of supply fails any portion of Table M.04.01-1. One (1) retest will be allowed for the Contractor to make corrections or changes to the process. If, upon retest, the material does not meet the requirements of Items 1 through 7, additional testing will be required in accordance with Item 8.

(c) The Contractor may provide a petrographic analysis of the material performed by a third party, acceptable to the Engineer, at its' own expense. The Contractor shall submit the results of the analysis with recommended changes to the manufacturing process to the Engineer. The Contractor shall submit fine aggregate samples for testing by the Engineer after the recommended changes have been made.

The Contractor may request the use of such fine aggregate on select project(s) for certain applications of bituminous concrete pavement. Such material will be monitored for a period no less than 48 months, at no cost to the State. Terms of any evaluation and suitable application will be determined by the Engineer.

3. Mineral Filler:

(a) Requirements: Mineral filler shall consist of finely divided mineral matter such as rock dust, including limestone dust, slag dust, hydrated lime, hydraulic cement, or other accepted mineral matter. At the time of use it shall be freely flowing and devoid of agglomerations. Mineral filler shall be introduced and controlled at all times during production in a manner acceptable to the Engineer.

(b) Basis of Approval: The request for approval of the source of supply shall include the location, manufacturing process, handling and storage methods for the material. Mineral filler shall conform to the requirements of AASHTO M 17.

4. Performance Graded Asphalt Binder:

(a) General:

i. Liquid PG binders shall be uniformly mixed and blended and be free of contaminants such as fuel oils and other solvents. Binders shall be properly heated and stored to prevent damage or separation.

ii. The blending at mixing plants of PG binder from different suppliers is strictly prohibited. Contractors who blend PG binders will be classified as a supplier and will be required to certify the binder in accordance with AASHTO R 26(M). The binder shall meet the requirements of AASHTO M 332 and shall be graded or verified in accordance with AASHTO R 29. The Contractor shall submit a Certified Test Report and bill of lading representing each delivery in accordance with AASHTO R 26(M). The Certified Test Report must also indicate the binder specific gravity at 77° F; rotational viscosity at 275° F and 329° F and the mixing and compaction viscosity-temperature chart for each shipment.

iii. The Contractor shall submit the name(s) of personnel responsible for receipt, inspection, and record keeping of PG binder materials. Contractor plant personnel shall document specific storage tank(s) where binder will be transferred and stored until used, and provide binder samples to the Engineer upon request. The person(s) shall assure that each shipment (tanker truck) is accompanied by a statement certifying that the transport vehicle was inspected before loading and was found acceptable for the material shipped and that the binder will be free of contamination from any residual material, along with 2 copies of the bill of lading.

iv. Basis of Approval: The request for approval of the source of supply shall list the location where the material will be manufactured, and the handling and storage methods, along with necessary certification in accordance with AASHTO R 26(M). Only suppliers/refineries that have an approved "Quality Control Plan for Performance Graded Binders" formatted in accordance with AASHTO R 26(M) will be allowed to supply PG binders to Department projects.

(b) Neat Performance Grade (PG) Binder:

i. PG binder shall be classified by the supplier as a "Neat" binder for each lot and be so labeled on each bill of lading. Neat PG binders shall be free from modification with: fillers, extenders, reinforcing agents, adhesion promoters,

thermoplastic polymers, acid modification and other additives such as re-refined motor oil, and shall indicate such information on each bill of lading and certified test report.

ii. The asphalt binder shall be PG 64S-22.

(c) Modified Performance Grade (PG) Binder: Unless otherwise noted, the asphalt binder shall be Performance Grade PG 64E-22 asphalt modified solely with a Styrene-Butadiene-Styrene (SBS) polymer. The polymer modifier shall be added at either the refinery or terminal and delivered to the bituminous concrete production facility as homogenous blend. The stability of the modified binder shall be verified in accordance with ASTM D7173 using the Dynamic Shear Rheometer (DSR). The DSR G*/sin(δ) results from the top and bottom sections of the ASTM D7173 test shall not differ by more than 10%. The results of ASTM D7173 shall be included on the Certified Test Report. The binder shall meet the requirements of AASHTO M 332 (including Appendix X1) and AASHTO R 29.

(d) Warm Mix Additive or Technology:

i. The warm mix additive or technology must be listed on the NEAUPG Qualified Warm Mix Asphalt (WMA) Technologies List at the time of bid, which may be accessed online at http://www.neaupg.uconn.edu/welcome-to-the-neaupg-website/warm-mix-asphalt-wma-information.

ii. The warm mix additive shall be blended with the asphalt binder in accordance with the manufacturer's recommendations.

iii. The blended binder shall meet the requirements of AASHTO M 332 and shall be graded or verified in accordance with AASHTO R 29 for the specified binder grade. The Contractor shall submit a Certified Test Report showing the results of the testing demonstrating the binder grade. In addition, it must include the grade of the virgin binder, the brand name of the warm mix additive, the manufacturer's suggested rate for the WMA additive, the water injection rate (when applicable) and the WMA Technology manufacturer's recommended mixing and compaction temperature ranges.

5. Emulsified Asphalts:

(a) General:

i. Emulsified asphalts shall be homogeneous and be free of contaminants such as fuel oils and other solvents. Emulsions shall be properly stored to prevent damage or separation.

ii. The blending at mixing plants of emulsified asphalts from different suppliers is strictly prohibited. Contractors who blend emulsified asphalts will be classified as a supplier and will be required to certify the emulsion in accordance with AASHTO PP 71. The emulsified asphalt shall meet the requirements of AASHTO M 140(M) or AASHTO M 208 as applicable.

(b) Supplier Approval:

i. The request for approval of the source of supply shall list the location where the material is manufactured, the handling and storage methods, and certifications in accordance with AASHTO PP 71. Only suppliers that have an approved "Quality Control Plan for Emulsified Asphalt" formatted in accordance with AASHTO PP 71 will be allowed to supply emulsified asphalt to Department projects.

ii. The supplier shall submit to the TDC a Certified Test Report representing each lot in accordance with AASHTO PP 71. The Certified Test Report shall include test results for each specified requirement for the grade delivered and shall also indicate the density at 60º F. Additionally, once a month, 1 split sample for each emulsified asphalt grade shall be submitted.

(c) Basis of Approval

i. Each shipment of emulsified asphalt delivered to the Project Site shall be accompanied with the corresponding SDS and Certified Test Report listing Saybolt viscosity, residue by evaporation, penetration of residue, and weight per gallon at 60° F.

ii. Anionic emulsified asphalts shall conform to the requirements of AASHTO M-140(M). Materials used for tack coat shall not be diluted and meet grade RS-1

or RS-1H. When ambient temperatures are 80° F and rising, grade SS-1 or SS-lH may be substituted if permitted by the Engineer.

iii. Cationic emulsified asphalt shall conform to the requirements of AASHTO M-208. Materials used for tack coat shall not be diluted and meet grade CRS-1. The settlement and demulsibility test will not be performed unless deemed necessary by the Engineer. When ambient temperatures are 80° F and rising, grade CSS-1 or CSS-lH may be substituted if permitted by the Engineer.

6. Reclaimed Asphalt Pavement (RAP):

(a) Requirements: RAP shall consist of asphalt pavement constructed with asphalt and aggregate reclaimed by cold milling or other removal techniques approved by the Engineer. For bituminous concrete mixtures containing RAP, the Contractor shall submit a JMF in accordance with Article M.04.02 to the Engineer for review.

(b) Basis of Approval: The RAP material will be accepted on the basis of one of the following criteria:

i. When the source of all RAP material is from pavements previously constructed on Department projects, the Contractor shall provide a materials certificate listing the detailed locations and lengths of those pavements and that the RAP is only from those locations listed.

ii. When the RAP material source or quality is not known, the Contractor shall test the material and provide the following information along with a request for approval to the Engineer at least 30 calendar days prior to the start of the paving operation. The request shall include a material certificate stating that the RAP consists of aggregates that meet the specification requirements of Subarticles M.04.01-1 through M.04.01-3 and that the binder in the RAP is substantially free of solvents, tars and other contaminants. The Contractor is prohibited from using unapproved material on Department projects and shall take necessary action to prevent contamination of approved RAP stockpiles. Stockpiles of unapproved material shall remain separate from all other RAP materials at all times. The request for approval shall include the following:

1. A 50-lb. sample of the RAP to be incorporated into the recycled mixture.
2. A 25-lb. sample of the extracted aggregate from the RAP.
3. A statement that RAP material has been crushed to 100% passing the 1/2 in sieve and remains free from contaminants such as joint compound, wood, plastic, and metals.

7. Crushed Recycled Container Glass (CRCG):

(a) Requirements: The Contractor may propose to use clean and environmentally-acceptable CRCG in an amount not greater than 5% by weight of total aggregate.

(b) Basis of Approval: The Contractor shall submit to the Engineer a request to use CRCG. The request shall state that the CRCG contains no more than 1% by weight of contaminants such as paper, plastic and metal and conform to the following gradation:

CRCG Grading Requirements	
Sieve Size	Percent Passing
3/8 in	100
No. 4	35-100
No. 200	0.0-10.0

8. Joint Seal Material Requirements: Joint seal material shall be a hot-poured rubber compound intended for use in sealing joints and cracks in bituminous concrete pavements. Joint seal material must meet the requirements of ASTM D 6690 – Type 2.

9. Recycled Asphalt Shingles (RAS) Requirements: RAS shall consist of processed asphalt roofing shingles from post-consumer asphalt shingles or from manufactured shingle waste. The RAS material under consideration for use in bituminous concrete mixtures must be certified as being asbestos-free and shall be entirely free of whole, intact nails. The RAS material shall meet the requirements of AASHTO MP 23.

The producer shall test the RAS material to determine the asphalt content and the gradation of the RAS material. The producer shall take necessary action to prevent contamination of RAS stockpiles.

10. Plant Requirements:

(a) Mixing Plant and Machinery: The mixing plant used in the preparation of the bituminous concrete shall comply with AASHTO M 156 for a Batch Plant or a Drum Dryer Mixer Plant, and be approved by the Engineer.

(b) Storage Silos: For all mixes, the Contractor may use silos for short-term storage of Superpave mixtures with prior notification and approval of the Engineer. The storage silo cylinder must have either an internal heating system, or the cone at the bottom must be heated. Prior approval must be obtained for storage times greater than those listed in the table below. When multiple silos are filled, the Contractor shall discharge 1 silo at a time. Simultaneous discharge of multiple silos is not permitted.

Type of silo cylinder	Maximum storage time for all classes (hr)	
	HMA	WMA/PMA
Open Surge	4	Mfg Recommendations
Unheated - Non-insulated	8	Mfg Recommendations
Unheated - Insulated	18	Mfg Recommendations
Heated - No inert gas	TBD by the Engineer	TBD by the Engineer

(c) Documentation System: The mixing plant documentation system shall include equipment for accurately proportioning the components of the mixture by weight and in the proper order, controlling the cycle sequence and timing the mixing operations. Recording equipment shall monitor the batching sequence of each component of the mixture and produce a printed record of these operations on each delivery ticket, as specified herein. Material feed controls shall be automatically or manually adjustable to provide proportions within the tolerances listed below for any batch size.

An asterisk (*) shall be automatically printed next to any individual batch weight(s) exceeding the following tolerances:

Each Aggregate Component	±1.5% of individual or cumulative target weight for each bin
Mineral Filler	±0.5% of the total batch
Bituminous Material	±0.1% of the total batch
Zero Return (Aggregate)	±0.5% of the total batch
Zero Return (Bituminous Material)	±0.1% of the total batch

The entire batching and mixing interlock cut-off circuits shall interrupt and stop the automatic batching operations when an error exceeding the acceptable tolerance occurs in proportioning.

There must be provisions so that scales are not manually adjusted during the printing process. In addition, the system shall be interlocked to allow printing only when the scale has come to a complete rest. A unique printed character (m) shall automatically be printed on the truck and batch plant printout when the automatic batching sequence is interrupted or switched to auto-manual or full manual during proportioning. For each day's production, each project shall be provided a clear, legible copy of these recordings on each delivery ticket.

(d) Aggregates: The Contractor shall ensure that aggregate stockpiles are managed to provide uniform gradation and particle shape, prevent segregation and cross contamination in a manner acceptable to the Engineer. For drum plants only, the Contractor shall determine the percent moisture content at a minimum, prior to production and half way through production.

(e) Mixture: The dry and wet mix times shall be sufficient to provide proper coating (minimum 95% as determined by AASHTO T 195(M)) of all particles with bitumen and produce a uniform mixture.

The Contractor shall make necessary adjustments to ensure all types of bituminous concrete mixtures contain no more than 0.5% moisture throughout when tested in accordance with AASHTO T 329.

(f) RAP: The Contractor shall indicate the percent of RAP, the moisture content (at a minimum determined twice daily, prior to production and halfway through production), and the net dry weight of RAP added to the mixture on each delivery ticket. For each day of production, the production shall conform to the job mix formula and RAP percentage and no change shall be made without the prior approval of the Engineer.

(g) Asphalt Binder: The last day of every month, a binder log shall be submitted when the monthly production for the Department exceeds 5000 tons. Blending of PG binders from different suppliers or grades at the bituminous concrete production facility is strictly prohibited.

(h) Warm mix additive: For mechanically foamed WMA, the maximum water injection rate shall not exceed 2.0% water by total weight of binder and the water injection rate shall be constantly monitored during production.

(i) Field Laboratory: The Contractor shall furnish the Engineer an acceptable field laboratory at the production facility to test bituminous concrete mixtures during production. The field laboratory shall have a minimum of 300 s.f., have a potable water source and drainage, in accordance with the CT Department of Public Health Drinking Water Division, and be equipped with all necessary testing equipment as well as with a PC, printer, and telephone with a dedicated hard-wired phone line. In addition, the PC shall have a high speed internet connection with a minimum upstream of 384 Kbps and a functioning web browser with unrestricted access to https://ctmail.ct.gov. This equipment shall be maintained in clean and good working order at all times and be made available for use by the Engineer.

The laboratory shall be equipped with a suitable heating system capable of maintaining a minimum temperature of 65° F. It shall be clean and free of all materials and equipment not associated with the laboratory. Windows shall be installed to provide sufficient light and ventilation. During summer months adequate cooling or ventilation must be provided so the indoor air temperature shall not exceed the ambient outdoor temperature. Light fixtures and outlets shall be installed at convenient locations, and a telephone shall be within audible range of the testing area. The laboratory shall be equipped with an adequate workbench that has a suitable length, width, and sampling tables, and shall be approved by the Engineer.

The field laboratory testing apparatus, supplies, and safety equipment shall be capable of performing all tests in their entirety that are referenced in AASHTO R 35, *Standard Practice for Superpave Volumetric Design for Hot-Mix Asphalt (HMA)* and AASHTO M 323, *Standard Specification for Superpave Volumetric Mix Design*. In addition, the equipment and supplies necessary to perform the tests must be sufficient to initiate and complete the tests identified in Table M.04.03-3, for the quantity of mixture produced at the facility on a daily basis. The Contractor shall ensure that the Laboratory is adequately supplied at all times during the course of the Project with all necessary testing materials and equipment.

The Contractor shall maintain a list of laboratory equipment used in the acceptance testing processes including but not limited to, balances, scales, manometer/vacuum gauge, thermometers, gyratory compactor, clearly showing calibration and/or inspection dates, in accordance with AASHTO R 18. The Contractor shall notify the Engineer if any modifications are made to the equipment within the field laboratory. The Contractor shall take immediate action to replace, repair, or recalibrate any piece of equipment that is out of calibration, malfunctioning, or not in operation.

M.04.02—Mix design and Job Mix Formula (JMF)

1. Curb Mix:

(a) Requirements: When curb mix is specified, the Contractor shall develop a bituminous concrete mix design that includes a JMF consisting of target values for

gradation, binder content and air voids as shown in Table M.04.02-1. The Contractor may use RAP in 5% increments up to a maximum of 30% provided a new JMF is accepted by the Engineer.

(b) Basis of Approval: The Contractor shall submit to the Engineer a request for approval of the JMF annually in accordance with 1 of the methods described herein. Prior to the start of any paving operations, the JMF must be accepted by the Engineer, and the Contractor must demonstrate the ability to meet the accepted JMF. Additionally, the fraction of material retained between any 2 consecutive sieves shall not be less than 4%.

The Contractor shall test the mixture for compliance with the submitted JMF and Table M.04.02-1. The maximum theoretical density (Gmm) will be determined by AASHTO T 209. If the mixture does not meet the requirements, the JMF shall be adjusted within the ranges shown in Table M.04.02-1 until an acceptable mixture is produced.

An accepted JMF from the previous operating season may be acceptable to the Engineer provided that there are no changes in the sources of supply for the coarse aggregate, fine aggregate, recycled material (if applicable) and the plant operation had been consistently producing acceptable mixture.

The Contractor shall not change sources of supply after a JMF has been accepted. Before a new source of supply for materials is used, a new JMF shall be submitted to the Engineer for approval.

TABLE M.04.02-1:
Master Ranges for Curb Mix Mixtures

Mix	**Curb Mix**	**Production Tolerances from JMF target**
Grade of PG **Binder content %**	**PG 64S-22** **6.5 - 9.0**	**0.4**
Sieve Size		
No. 200	3.0 – 8.0 (b)	2.0
No. 50	10 - 30	4
No. 30	20 - 40	5
No. 8	40 - 70	6
No. 4	65 - 87	7
1/4 in		
3/8 in	95 - 100	8
1/2 in	100	8
3/4 in		8
1 in		
2 in		
Additionally, the fraction of material retained between any 2 consecutive sieves shall not be less than 4%		
Mixture Temperature		
Binder	325°F maximum	
Aggregate	280-350° F	
Mixtures	265-325° F	
Mixture Properties		
VOIDS %	0 – 4.0 (a)	
Notes: (a) Compaction Parameter 50 gyrations (N_{des}) (b) The percent passing the No. 200 sieve shall not exceed the percentage of bituminous asphalt binder determined by AASHTO T 164 or AASHTO T 308.		

2. Superpave Design Method – S0.25, S0.375, S0.5, and S1

(a) Requirements: The Contractor or its representative shall design and submit Superpave mix designs annually for approval. The design laboratory developing the mixes shall be approved by the Engineer. The mix design shall be based on the specified Equivalent Single-Axle Loads (ESAL). Each bituminous concrete mix type must meet the requirements shown in Tables M.04.02-2 to M.04.02-5 and shall be in accordance with AASHTO M 323 and AASHTO R 35. The mix design shall include the nominal maximum aggregate size and a JMF consisting of target values for gradation and bitumen content for each bituminous concrete mix type designated for the Project.

The Contractor shall provide test results with supporting documentation from an AASHTO Materials Reference Laboratory (AMRL) with the use of NETTCP Certified Technicians for the following tests:

i. Aggregate consensus properties for each type & level, as specified in Table M.04.02-3 and the specific gravity data.
ii. Extracted aggregates from RAP aggregate, when applicable, consensus properties for each type & level, as specified in Table M.04.02-3 and the specific gravity data.
iii. New mixes shall be tested in accordance with AASHTO T 283(M) *Standard Method of Test for Resistance of Compacted Hot-Mix Asphalt (HMA) to Moisture-Induced Damage*, (also called Tensile Strength Ratio or TSR). The compacted specimens may be fabricated at a bituminous concrete facility and then tested at an AMRL-accredited facility. The AASHTO T 283(M) test results, specimens, and corresponding JMF sheet (Form MAT-429) shall be submitted by the Contractor for review.

In addition, minimum binder content values apply to all types of bituminous concrete mixtures, as stated in Table M.04.02-5. For mixtures containing RAP, the virgin production and the anticipated proportion of binder contributed by the RAP cannot be less than the total permitted binder content value for that type nor the JMF minimum binder content.

i. Superpave Mixture (virgin): For bituminous concrete mixtures that contain no recycled material, the limits prescribed in Tables M.04.02-2 through Table M.04.02-5 apply. The Contractor shall submit a JMF, on a form provided by the Engineer, with the individual fractions of the aggregate expressed as percentages of the total weight of the mix and the source(s) of all materials, to the Engineer for approval. The JMF shall indicate the corrected target binder content and applicable binder correction factor (ignition oven or extractor) for each mix type by total weight of mix. The mineral filler (dust) shall be defined as that portion of blended mix that passes the No. 200 sieve by weight when tested in accordance with AASHTO T 30. The dust-to-effective asphalt (D/Pbe) ratio shall be between 0.6 and 1.2 by weight. The dry/wet mix times and hot bin proportions (batch plants only) for each type shall be included in the JMF.

   The percentage of aggregate passing each sieve shall be plotted on a 0.45 power gradation chart and shall be submitted for all bituminous concrete mixtures. This chart shall delineate the percentage of material passing each test sieve size as defined by the JMF. The percentage of aggregate passing each standard sieve shall fall within the specified control points as shown in Tables M.04.02-2 through Table M.04.02-5.

   A change in the JMF requires that a new chart be submitted.

ii. Superpave Mixtures with RAP: Use of approved RAP may be allowed with the following conditions:
   - RAP amounts up to 15% may be used with no binder grade modification.
   - RAP amounts up to 20% may be used provided a new JMF is approved by the Engineer. The JMF submittal shall include the grade of virgin binder added. The JMF shall be accompanied by a blending chart and supporting test results in accordance with AASHTO M 323 Appendix X1, or by test results that show the combined binder (recovered binder from the RAP, virgin binder at the mix design proportions, warm mix asphalt additive and

any other modifier if used) meets the requirements of the specified binder grade.

- Two (2) representative samples of RAP shall be obtained. Each sample shall be split, and 1 split sample shall be tested for binder content in accordance with AASHTO T 164 and the other in accordance AASHTO T 308.

Unless approved by the Engineer, RAP material shall not be used with any other recycling option.

iii. Superpave Mixtures with RAS: Use of RAS may be allowed solely in HMA S1 mixtures with the following conditions:
- RAS amounts up to 3% may be used.
- RAS total binder replacement up to 15% may be used with no binder grade modification.
- RAS total binder replacement up to 20% may be used provided a new JMF is approved by the Engineer. The JMF submittal shall include the grade of virgin binder added. The JMF shall be accompanied by a blending chart and supporting test results in accordance to AASHTO M 323 appendix X1 or by test results that show the combined binder (recovered binder from the RAP, virgin binder at the mix design proportions, warm mix asphalt additive and any other modifier if used) meets the requirements of the specified binder grade.
- Superpave Mixtures with RAS shall meet AASHTO PP 78 design considerations. The RAS asphalt binder availability factor (F) used in AASHTO PP 78 Equation 2 shall be 0.85.

iv. Superpave Mixtures with CRCG: In addition to the requirements in M.04.02–2 (a) through (c), for bituminous concrete mixtures that contain CRCG, the Contractor shall submit a materials certificate to the Engineer stating that the CRCG complies with requirements stated in Article M.04.01, as applicable. Additionally, 1% hydrated lime, or other accepted non-stripping agent, shall be added to all mixtures containing CRCG. CRCG material shall not be used with any other recycling option.

(b) Basis of Approval: On an annual basis, the Contractor shall submit to the Engineer any bituminous concrete mix design, and JMF anticipated for use on Department projects. Prior to the start of any paving operations, the mix design and JMF must be approved by the Engineer. Bituminous concrete mixture supplied to the Project without an approved mix design and JMF will be rejected. The following information must be included in the mix design submittal:

i. Gradation, consensus properties and specific gravities of the aggregate, RAP, and RAS.
ii. Average asphalt content of the RAP and RAS by AASHTO T 164.
iii. Source of RAP and RAS and percentage to be used.
iv. Warm mix Technology and manufacturer's recommended additive rate and tolerances.
v. TSR test report, and, if applicable, anti-strip manufacturer and recommended dosage rate.
vi. Mixing and compaction temperature ranges for the mix with and without the warm-mix technology incorporated.
vii. JMF ignition oven correction factor by AASHTO T 308.

The JMF shall be accepted if the Plant mixture and materials meet all criteria as specified in Tables M.04.02-2 through M.04.02-5. If the mixture does not meet the requirements, the Contractor shall adjust the JMF within the ranges shown in Tables M.04.02-2 through M.04.02-5 until an acceptable mixture is produced. All equipment, tests, and computations shall conform to the latest AASHTO R 35 and AASHTO M 323.

Any JMF, once approved, shall only be acceptable for use when it is produced by the designated plant, it utilizes the same component aggregates and binder source, and it continues to meet all criteria as specified herein, and component aggregates are maintained within the tolerances shown in Table M.04.02-2.

The Contractor shall not change any component source of supply including consensus properties after a JMF has been accepted. Before a new source of materials is used, a revised JMF shall be submitted to the Engineer for approval. Any approved JMF applies only to the plant for which it was submitted. Only 1 mix with 1 JMF will be approved for production at a time. Switching between approved JMF mixes with different component percentages or sources of supply is prohibited.

(c) Mix Status: Each facility will have each type of bituminous concrete mixture evaluated based on the previous year of production, for the next construction paving season, as determined by the Engineer. Based on the rating a type of mixture receives will determine whether the mixture can be produced without the completion of a Pre-Production Trial (PPT). Ratings will be provided to each bituminous concrete producer annually prior to the beginning of the paving season.

The rating criteria are based on compliance with Air Voids and Voids in Mineral Aggregate (VMA) as indicated in Table M.04.03-3 *Superpave Master Range for Bituminous Concrete Mixture Production*, and are as follows:

Criteria A: Based on Air Voids. Percentage of acceptance results with passing air voids.

Criteria B: Based on Air Voids and VMA. The percentage of acceptance results with passing VMA, and the percentage of acceptance results with passing air voids, will be averaged.

The final rating assigned will be the lower of the rating obtained with Criteria A or Criteria B.

Ratings are defined as:

"A" – Approved: A rating of "A" is assigned to each mixture type from a production facility with a current rating of 70% passing or greater.

"PPT" – Pre-Production Trial: Rating assigned to each mixture type from a production facility when:

1. there are no passing acceptance production results submitted to the Department from the previous year;
2. there is a source change in one or more aggregate components from the JMF on record by more than 10% by weight;
3. there is a change in RAP percentage;
4. the mixture has a rating of less than 70% from the previous season;
5. it is a new JMF not previously submitted.

Bituminous concrete mixtures rated with a "PPT" cannot be shipped or used on Department projects. A passing "PPT" test shall be performed with NETTCP certified personnel on that type of mixture by the bituminous concrete producer and meet all specifications (Tables M.04.02-2 to M.04.02-5) before production shipment may be resumed.

Contractors that have mix types rated as "PPT" may use one of the following three methods to change the rating to an "A:"

Option A: Schedule a day when a Department inspector can be at the facility to witness a passing "PPT" test or,

Option B: When the Contractor or their representative performs a "PPT" test without being witnessed by an inspector, the Contractor shall submit the test results and a split sample including 2 gyratory molds, 5,000 grams of boxed bituminous concrete for binder and gradation determination, and 5,000 grams of cooled loose bituminous concrete for Gmm determination for verification testing and approval. Passing verifications will designate the bituminous concrete type to be on an "A" status. Failing verifications will require the contractor to submit additional trials.

TABLE M.04.02-2: Superpave Master Range for Bituminous Concrete Mixture Design Criteria

	S0.25		S0.375		S0.5		S1	
Sieve	Control Points(3)		Control Points(3)		Control Points(3)		Control Points(3)	
inches	Min (%)	Max (%)	Min (%)	Max (%)	Min (%)	Max (%)	Min (%)	Max (%)
2.0	-	-	-	-	-	-	-	-
1.5	-	-	-	-	-	-	100	-
1.0	-	-	-	-	-	-	90	100
3/4	-	-	-	-	100	-	-	90
1/2	100	-	100	-	90	100	-	-
3/8	97	100	90	100	-	90	-	-
No. 4	-	90	-	90	-	-	-	-
No. 8	32	67	32	67	28	58	19	45
No. 16	-	-	-	-	-	-	-	-
No. 30								
No. 50								
No. 100								
No. 200	2.0	10.0	2.0	10.0	2.0	10.0	1.0	7.0
Pb(1)	-	-	-	-	-	-	-	-
VMA(2) (%)	16.0 ± 1		16.0 ± 1		15.0 ± 1		13.0 ± 1	
VA (%)	4.0 ± 1		4.0 ± 1		4.0 ± 1		4.0 ± 1	
Gse	JMF value		JMF value		JMF value		JMF value	
Gmm	JMF ± 0.030		JMF ± 0.030		JMF ± 0.030		JMF ± 0.030	
Dust/Pbe(4)	0.6 - 1.2		0.6 - 1.2		0.6 - 1.2		0.6 - 1.2	
Agg. Temp.(5)	280 - 350° F		280 - 350° F		280 - 350° F		280 - 350° F	
Mix Temp.(6)	265-325°F		265-325°F		265-325°F		265-325°F	
Design TSR	≥ 80%		≥ 80%		≥ 80%		≥ 80%	
T-283 Stripping	Minimal as determined by the Engineer							

Notes:

(1) Minimum Pb as specified in Table M.04.02-5.
(2) Voids in Mineral Aggregates shall be computed as specified in AASHTO R 35.
(3) Control point range is also defined as the master range for that mix.
(4) Dust is considered to be the percent of materials passing the No. 200 sieve.
(5) For WMA, lower minimum aggregate temperature will require Engineer's approval.
(6) For WMA and PMA, the mix temperature shall meet manufacturer's recommendations.

Option C: When the Contractor or their representative performs a "PPT" test without being witnessed by a Department inspector, the Engineer may verify the mix in the Contractor's laboratory. Passing verifications will designate the bituminous concrete type to be an "A" status. Failing verifications will require the Contractor to submit additional trials.

When Option A is used and the "PPT" test meets all specifications, the "PPT" test is considered a passing test and the rating for that mix is changed to "A." When the "PPT" test is not witnessed, the "PPT" Option B or C procedure must be followed. If the "PPT" Option B procedure is followed, the mixtures along with the test results must be delivered to the Materials Testing Lab. The test results must meet the "C" tolerances established by the Engineer. The tolerance Table is included in the Department's current QA Program for Materials, Acceptance and Assurance Testing Policies and Procedures.

"U" – No Acceptable Mix Design on File: Rating assigned to a type of mixture that does not have a JMF submitted, or the JMF submitted has not been approved, or is incomplete. A mix design or JMF must be submitted annually, at least 7 days prior to production in order to obtain an "A," or "PPT" status for that mix. A "U" will be used only to designate the mix status until the mix design has been approved, and is accompanied with all supporting data as specified. Bituminous concrete mixtures rated with a "U" cannot be used on Department projects.

TABLE M.04.02-3:
Superpave Master Range for Consensus Properties of Combined Aggregate Structures

Traffic Level	Design ESALs(2) (million) (80kN)	Coarse Aggregate Angularity(1) ASTM D5821(3)	Fine Aggregate Angularity(1) AASHTO T 304(4)	Flat and Elongated Particles(5) ASTM D4791	Sand Equivalent(6) AASHTO T 176
1*	< 0.3	55/- -	40	10	40
2	0.3 to < 3.0	75/- -	40	10	40
3	≥ 3.0	95/90	45	10	45

Notes:
(1) If less than 25% of a given layer is within 4 inches of the anticipated top surface, the layer may be considered to be below 4 inches for mixture design purposes.
(2) Design ESALs are the anticipated project traffic levels expected on the design lane, projected over a 20 year period, regardless of the actual expected design life of the roadway.
(3) Criteria presented as minimum values. 95/90 denotes that a minimum of 95% of the coarse aggregate, by mass, shall have one fractured face and that a minimum of 90% shall have 2 fractured faces.
(4) Criteria presented as minimum percent air voids in loosely compacted fine aggregate passing the No. 8 sieve.
(5) Criteria presented as maximum percent by mass of flat and elongated particles of materials retained on the No. 4 sieve, determined at 5:1 ratio.
(6) Criteria presented as minimum values for fine aggregate passing the No. 8 sieve.

***NOTE: Level 1 for use by Towns and Municipalities ONLY.**

TABLE M.04.02-4:
Superpave Master Range for Traffic Levels and Design Volumetric Properties

Traffic Level	Design ESALs	Number of Gyrations by Superpave Gyratory Compactor			Percent Density of Gmm from HMA/ WMA specimen			Voids Filled with Asphalt (VFA) Based on Nominal mix size - inch			
	(million)	Nini	Ndes	Nmax	Nini	Ndes	Nmax	0.25	0.375	0.5	1
1*	<0.3	6	50	75	≤91.5	96.0	≤98.0	70-80	70-80	70-80	67-80
2	0.3 to <3.0	7	75	115	≤90.5	96.0	≤98.0	65-78	65-78	65-78	65-78
3	≥3.0	8	100	160	≤90.0	96.0	≤98.0	73-76	73-76	65-75	65-75

***NOTE: Level 1 for use by Towns and Municipalities ONLY.**

TABLE M.04.02-5:
Superpave Minimum Binder Content by Mix Type and Level

Mix Type	Level	Binder Content Minimum
S0.25	1*	5.6
S0.25	2	5.5
S0.25	3	5.4
S0.375	1*	5.6
S0.375	2	5.5
S0.375	3	5.4
S0.5	1*	5.0
S0.5	2	4.9
S0.5	3	4.8
S1	1*	4.6
S1	2	4.5
S1	3	4.4

***NOTE: Level 1 for use by Towns and Municipalities ONLY.**

M.04.03—Production Requirements:

1. Standard Quality Control Plan (QCP) for Production: The QCP for production shall describe the organization and procedures which the Contractor shall use to administer quality control. The QCP shall include the procedures used to control the production process, to determine when immediate changes to the processes are needed, and to implement the required changes. The QCP must detail the inspection, sampling and testing protocols to be used, and the frequency for each.

Control Chart(s) shall be developed and maintained for critical aspect(s) of the production process as determined by the Contractor. The control chart(s) shall identify the material property, applicable upper and lower control limits, and be updated with current test data. At a minimum, the following quality characteristics shall be included in the control charts:

- percent passing No. 4 sieve
- percent passing No. 200 sieve
- binder content

- air voids
- Gmm
- VMA

The control chart(s) shall be used as part of the quality control system to document variability of the bituminous concrete production process. The control chart(s) shall be submitted to the Engineer the first day of each month.

The QCP shall also include the name and qualifications of a Quality Control Manager. The Quality Control Manager shall be responsible for the administration of the QCP, including compliance with the plan and any plan modifications.

The Contractor shall submit complete production testing records to the Engineer within 24 hours in a manner acceptable to the Engineer.

The QCP shall also include the name and qualifications of any outside testing laboratory performing any QC functions on behalf of the Contractor. The QCP must also include a list of sampling and testing methods and frequencies used during production, and the names of all Quality Control personnel and their duties.

Approval of the QCP does not imply any warranty by the Engineer that adherence to the plan will result in production of bituminous concrete that complies with these specifications. The Contractor shall submit any changes to the QCP as work progresses.

2. Acceptance Sampling & Testing Methods:

(a) General: Acceptance samples of mixtures shall be obtained from the hauling vehicles and tested by the Contractor at the facility during each day's production.

The Contractor shall submit all acceptance tests results to the Engineer within 24 hours or prior to the next day's production. All acceptance test specimens and supporting documentation must be retained by the Contractor. Verification testing will be performed by the Engineer in accordance with the Department's QA Program for Materials. Labeled Acceptance test specimens shall be retained at the production facilities and may be disposed of with the approval of the Engineer. All Quality Control specimens shall be clearly labeled and separated from the Acceptance specimens.

Should the Department be unable to verify the Contractor's acceptance test result(s) due to a failure of the Contractor to retain acceptance test specimens or supporting documentation, the Contractor shall review its quality control plan, determine the cause of the nonconformance and respond in writing within 24 hours to the Engineer describing the corrective action taken at the plant. In addition, the Contractor must provide supporting documentation or test results to validate the subject acceptance test result(s). The Engineer may invalidate any positive adjustments for material corresponding to the acceptance test(s). Failure by the Contractor to adequately address quality control issues at a facility may result in suspension of production for Department projects at that facility.

Contractor personnel performing acceptance sampling and testing must be present at the facility prior to, during, and until completion of production, and be certified as a NETTCP HMA Plant Technician or Interim HMA Plant Technician and be in good standing. Production of material for use on State projects must be suspended by the Contractor if such personnel are not present.

Technicians found by the Engineer to be non-compliant with NETTCP or Department policies may be removed by the Engineer from participating in the acceptance testing process for Department projects until their actions can be reviewed.

Anytime during production that testing equipment becomes inoperable, production can continue for a maximum of 1 hour. The Contractor shall obtain box sample(s) in accordance with Table M.04.03-2 to satisfy the daily acceptance testing requirement for the quantity shipped to the Project. The box sample(s) shall be tested once the equipment issue has been resolved to the satisfaction of the Engineer. Production beyond 1 hour may be considered by the Engineer. Production will not be permitted beyond that day until the subject equipment issue has been resolved.

(b) Curb Mix Acceptance Sampling and Testing Procedures: Curb Mixes shall be tested by the Contractor at a frequency of 1 test per every 250 tons of cumulative production, regardless of the day of production.

When these mix designs are specified, the following acceptance procedures and AASHTO test methods shall be used:

TABLE M.04.03-1:
Curb Mix Acceptance Test Procedures

Protocol	Reference	Description
1	**AASHTO T 30(M)**	Mechanical Analysis of Extracted Aggregate
2	**AASHTO T 168**	Sampling of Bituminous Concrete
3	**AASHTO T 308**	Binder content by Ignition Oven method (adjusted for aggregate correction factor)
4	**AASHTO T 209(M)**	Theoretical Maximum Specific Gravity and Density of Bituminous Paving Mixtures
5	**AASHTO T 312**	Superpave Gyratory molds compacted to N_{des}
6	**AASHTO T 329**	Moisture Content of Hot-Mix Asphalt (HMA) by Oven Method

i. Determination of Off-Test Status:

1. The test results of AASHTO T 308 and T 30(M) will be used to determine if the mixture is within the tolerances shown in Table M.04.02-1. Curb Mixtures are considered "off test" when the test results indicate that any single value for bitumen content or gradation are not within the tolerances shown in Table M.04.02-1 for that mixture. If the mix is "off test," the Contractor must take immediate actions to correct the deficiency and a new acceptance sample shall be tested on the same day or the following day of production.
2. When multiple plants and silos are located at 1 site, mixture supplied to 1 project is considered as coming from 1 source for the purpose of applying the "off test" status.
3. The Engineer may cease supply from the plant when test results from 3 consecutive samples are not within the JMF tolerances or the test results from 2 consecutive samples not within the master range indicated in Table M.04.02-1 regardless of production date.

ii. JMF Changes

1. If a test indicates that the bitumen content or gradation are outside the tolerances, the Contractor may make a single JMF change as allowed by the Engineer prior to any additional testing. A JMF change shall include the date and name of the Engineer that allowed it. Consecutive test results outside the requirements of Table M.04.02-1 JMF tolerances may result in rejection of the mixture.
2. Any modification to the JMF shall not exceed 50% of the JMF tolerances indicated in Table M.04.02-1 for any given component of the mixture without approval of the Engineer. When such an adjustment is made to the bitumen, the corresponding production percentage of bitumen shall be revised accordingly.

(c) Superpave Mix Acceptance Sampling and Testing Procedures: The hauling vehicle from which samples are obtained shall be selected using stratified – random sampling based on the total estimated tons of production in accordance with ASTM D3665, except that the first test shall be randomly taken from the first 151 tons or as directed by the Engineer. The Engineer may request a second acceptance test within the first sub lot. One (1) acceptance test shall always be performed in the last sub-lot based on actual tons of material produced.

The number of sub lots per acceptance test is based on the total production per day as indicated in Table M.04.03-2. Quantities of the same type and level mix per plant may be combined daily for multiple State projects to determine the number of sub lots. The Engineer may direct that additional acceptance samples be obtained to represent materials actually being delivered to the Project.

The payment adjustment for air voids and liquid binder will be calculated per sub lot as described in Section 4.06.

An acceptance test shall not be performed within 150 tons of production from a previous acceptance test unless approved by the Engineer. Quality Control tests are not subject to this restriction. Unless otherwise tested, a minimum of 1 acceptance test shall be performed for every 4 days of production at a facility for each type and level mix (days of production may or may not be consecutive days).

TABLE M.04.03-2:
Superpave Acceptance Testing Frequency per Type/Level/Plant

Daily quantity produced in tons (lot)	Number of Sub Lots/Tests
0 to 150	0, Unless requested by the Engineer
151 to 600	1
601 to 1,200	2
1,201 to 1,800	3
1,801 or greater	1 per 600 tons or portions thereof

When the Superpave mix design is specified, the following acceptance and AASHTO test procedures shall be used:

TABLE M.04.03-3:
Superpave Acceptance Testing Procedures

Protocol	Reference	Description
1	AASHTO T 168	Sampling of bituminous concrete
2	AASHTO R 47	Reducing samples to testing size
3	AASHTO T 308	Binder content by Ignition Oven method (adjusted for aggregate correction factor)
4	AASHTO T 30	Gradation of extracted aggregate for bituminous concrete mixture
5	AASHTO T 312	(1)Superpave Gyratory molds compacted to N_{des}
6	AASHTO T 166	(2)Bulk specific gravity of bituminous concrete
7	AASHTO R 35	(2)Air voids, VMA
8	AASHTO T 209(M)	Maximum specific gravity of bituminous concrete (average of two tests)
9	AASHTO T 329	Moisture content of Production bituminous concrete

Notes: (1) One (1) set equals 2 each of 6-in molds. Molds to be compacted to Nmax for PPTs and to Ndes for production testing. The first sublot of the year shall be compacted to N_{max}

(2) Average value of 1 set of 6-in molds.

If the average corrected Pb content differs by 0.3% or more from the average bituminous concrete facility production delivery ticket in 5 consecutive tests regardless of the production date (moving average), the Contractor shall immediately investigate, determine an assignable cause and correct the issue. When 2 consecutive moving average differences are 0.3% or more, the Engineer may require a new aggregate correction factor.

The test specimen must be ready to be placed in an approved ignition furnace for testing in accordance with AASHTO T 308 within 30 minutes of being obtained from the hauling vehicle and the test shall start immediately after.

The Contractor shall perform moisture susceptibility (TSR) testing annually for all design levels of HMA-, WMA-, and PMA- S0.5 plant-produced mixtures, in accordance with the latest version of AASHTO T 283(M).

If any material source changes from the previous year, or during the production season, a mix design TSR as well as a production TSR is required for the new mixture. The AASHTO T 283(M) test shall be performed at an AMRL by NETTCP Certified Technicians. The test results and specimens shall be submitted to the Engineer for review. This shall be completed within 30 days from the start of production. Superpave mixtures that require anti-strip additives (either liquid or mineral) shall continue to meet all requirements specified herein for binder and bituminous concrete. The Contractor shall submit the name, manufacturer, percent used, technical datasheet and SDS for the anti-strip additive (if applicable) to the Engineer. In addition, compaction of samples shall be accomplished utilizing an accepted Superpave Gyratory Compactor (SGC), supplied by the Contractor. The SGC shall be located at the facility supplying mixture to the Project.

i. <u>Determination of Off-Test Status:</u>

1. Superpave mixes shall be considered *"off test"* when any Control Point Sieve, VA, VMA, and Gmm values are outside of the limits specified in Table M.04.03-4 and the computed binder content (Pb) established by AASHTO T308 or as documented on the vehicle delivery ticket is below the minimum binder content stated in Table M.04.02-5. Note that further testing of samples or portions of samples not initially tested for this purpose cannot be used to change the status.
2. Any time the bituminous concrete mixture is considered Off-test:
   A. The Contractor shall notify the Engineer (and project staff) when the plant is *"off test"* for a type of mixture. When multiple plants and silos are located at one site, mixture supplied to one project is considered as coming from one source for the purpose of applying the *"off test"* determination.
   B. The Contractor must take immediate actions to correct the deficiency, minimize *"off test"* production to the project, and obtain an additional Process Control (PC) test after any corrective action to verify production is in conformance to the specifications. A PC test will not be used for acceptance and is solely for the use of the Contractor in its quality control process.

ii. <u>Cessation of Supply for Superpave Mixtures with no Payment Adjustment</u>: Production of bituminous concrete shall cease for the Project from any plant that consistently fails to produce mixture that meets the JMF and volumetric properties. The quantity of Superpave mixtures shipped to the Project that is "off-test" will not be adjusted for deficient mixtures.

The Contractor shall cease to supply mixture from a plant when:

1. Bituminous concrete mixture is "off test" on 3 consecutive tests for any combination of VMA or Gmm, regardless of date of production.
2. Bituminous concrete mixture is "off test" on 2 consecutive tests for the Control Point sieves in 1 day's production.

Following cessation, the Contractor shall immediately make necessary material or process corrections and run a Pre-Production Trial (PPT) for that type of mixture. Use of that type of mixture from that plant will be prohibited on the Project until the Contractor has demonstrated the ability to produce acceptable mixture from that facility. When the Contractor has a passing test and has received approval from the Engineer, the use of that mixture to the Project may resume.

iii. Cessation of Supply for Superpave Mixtures with Payment Adjustment: Production of bituminous concrete shall cease for the Project from any plant that consistently fails to produce mixture that meets the Superpave minimum binder content by mix type and level listed in Table M.04.02-5. The quantity of Superpave mixtures shipped to the project that is "off-test" will be adjusted for deficient mixtures in accordance with Section 4.06.

The Contractor shall cease to supply mixture from a plant when:

1. The binder content (Pb) is below the requirements of Table M.04.02-5 on the ignition oven test result after 2 consecutive tests, regardless of the date of production.
2. The air voids (VA) is outside the requirements of Table M.04.03-4 after 3 consecutive tests, regardless of the date of production.

Following cessation, the Contractor shall immediately make necessary material or process corrections and run a Pre-Production Trial (PPT) for that type of mixture. Use of that type of mixture from that plant will be prohibited on the Project until the Contractor has demonstrated the ability to produce acceptable mixture from that facility. When the Contractor has a passing test and has received approval from the Engineer, the use of that mixture to the Project may resume.

iv. JMF Changes for Superpave Mixture Production: It is understood that a JMF change is effective from the time it was submitted forward and is not retroactive to the previous test(s). JMF changes are permitted to allow for trends in aggregate and mix properties but every effort shall be employed by the Contractor to minimize this, to ensure a uniform and dense pavement. A revised JMF submittal shall include the date and name of the Engineer who allowed it.

JMF changes are only permitted prior to or after a production shift for all bituminous-concrete types of mixtures and only when they:

1. Are requested in writing and pre-approved by the Engineer.
2. Are based on a minimum of 2 successful tests.
3. Are documented with a promptly submitted revised JMF on the form provided by the Engineer.
4. A revised JMF submittal shall include the date and name of the Engineer that allowed it.

No change will be made on any aggregate or RAP consensus property or specific gravity unless the test is performed at an AASHTO Materials Reference Laboratory (AMRL) by NETTCP Certified Technicians.

A JMF change shall be submitted every time the plant target RAP or bin percentage deviates by more than 5% or the plant target binder content deviates by more than 0.15% from the active JMF.

TABLE M.04.03-4: Superpave Master Range for Bituminous Concrete Mixture Production

	S0.25		S0.375		S0.5		S1		Tolerances
Sieve	Control Points[4]		Control Points[4]		Control Points[4]		Control Points[4]		**From JMF Targets[4]**
inches	Min (%)	Max (%)	Min (%)	Max (%)	Min (%)	Max (%)	Min (%)	Max (%)	+/- Tolerance
1.5	-	-	-	-	-	-	100	-	
1.0	-	-	-	-	-	-	90	100	
3/4	-	-	-	-	100	-	-	90	
1/2	100	-	100	-	90	100	-	-	
3/8	97	100	90	100	-	90	-	-	
No. 4	-	90	-	90	-	-	-	-	
No. 8	32	67	32	67	28	58	19	45	
No. 16	-	-	-	-	-	-	-	-	
No. 200	2.0	10.0	2.0	10.0	2.0	10.0	1.0	7.0	
Pb[2]	-	-	-	-	-	-	-	-	see note [2]
VMA (%)	16.0		16.0		15.0		13.0		1.0
VA (%)	4.0		4.0		4.0		4.0		1.0
Gmm	JMF value		JMF value		JMF value		JMF value		0.030
Agg. Temp.[5]	280 - 350° F		280 - 350° F		280 - 350° F		280 - 350° F		
Mix Temp.[6]	265-325°F [1]		265-325°F [1]		265-325°F [1]		265-325°F [1]		
Prod. TSR	N/A		N/A		≥80%		N/A		
T-283 Stripping	N/A		N/A		Minimal TBD by the Engineer		N/A		

Notes for TABLE M.04.03-4:

[1] 300° F minimum after October 15.
[2] Minimum Pb as specified in Table M.04.02-5.
[3] Control point range is also defined as the master range for that mix.
[4] JMF tolerances shall be defined as the limits for production compliance. VA & Pb payment is subject to adjustments, as defined in Subarticle 4.06.04-2.
[5] For WMA, lower minimum aggregate temperature will require Engineer's approval.
[6] For WMA or polymer modified asphalt, the mix temperature shall meet manufacturer's recommendations. In addition for WMA the maximum mix temperature shall not exceed 325° F once the WMA technology is incorporated.

TABLE M.04.03-5:
JMF Tolerances for Application of Positive Adjustments

Sieve	**Tolerances**
	From JMF Targets
inches	±Tolerance
3/4	9 (1)
1/2	9 (1)
3/8	9 (2)
No. 4	8
No. 8	7
No. 16	6
No. 200	3
Pb	0.4

Notes:
(1) Only for S1 mixes
(2) Only for S0.5 and S1 mixes

TABLE M.04.03-6:
Superpave Master Range for Traffic Levels and Design Volumetric Properties

Traffic Level	**Design ESALs**	**Number of Gyrations by Superpave Gyratory Compactor**	
	(million)	**Nini**	**Ndes**
1*	< 0.3	6	50
2	0.3 to < 3.0	7	75
3	≥3.0	8	100

***NOTE: Level 1 for use by Towns and Municipalities ONLY.**

Table M.04.03-7:
Modifications to Standard AASHTO and ASTM Test Specifications and Procedures

AASHTO Standard Specification	
Reference	**Modification**
M 140	Emulsified Asphalt grade RS-1H shall meet all the requirements of the emulsified asphalt grade RS-1 except for the penetration requirement of the residue that will change from 100 to 200 penetration units to 40 to 90 penetration units (0.1 mm).
AASHTO Standard Method of Test	
Reference	**Modification**
T 30	Section 7.2 through 7.4 - Samples are not routinely washed for production testing

TABLE M.04.03-7 (continued):
Modifications to Standard AASHTO
and ASTM Test Specifications and Procedures

T 168	Samples are taken at 1 point in the pile. Samples from a hauling vehicle are taken from only 1 point instead of 3 as specified. Selection of Samples: Sampling is equally as important as the testing, and the sampler shall use every precaution to obtain samples that are truly representative of the bituminous mixture. Box Samples: In order to enhance the rate of processing samples taken in the field by Construction or Maintenance personnel, the samples will be tested in the order received and data processed to determine conformance to material specifications and to prioritize inspections by laboratory personnel.
T 195	Section 4.3 only 1 truckload of mixture is sampled. Samples are taken from opposite sides of the load.
T 209	Section 7.2 - The average of 2 bowls is used proportionally in order to satisfy minimum mass requirements. 8.3 - Omit Pycnometer method.
T 283	When foaming technology is used, the material used for the fabrication of the specimens shall be cooled to room temperature, and then reheated to the manufacturer's recommended compaction temperature prior to fabrication of the specimens.
T 331	6.1 Cores are dried to a constant mass prior to testing using a core-dry machine.
R 26	Quality Control Plans must be formatted in accordance with AASHTO R 26, certifying suppliers of performance-graded asphalt binders, Section 9.0, Suppliers Quality Control Plan, and "NEAUPG Model PGAB QC Plan." **1.** The Department requires that all laboratory technician(s) responsible for testing PG-binders be certified or Interim Qualified by NETTCP as a PG Asphalt Binder Lab Technician. **2.** Sampling of asphalt binders shall be done under the supervision of qualified technician. NECTP "Manual of Practice," Chapter 2 Page 2-4 (Key Issues 1-8). **3.** A copy of the Manual of Practice for testing asphalt binders in accordance with the Superpave PG Grading system shall be in the testing laboratory. **4.** All laboratories testing binders for the Department are required to be accredited by the AAMRL. **5.** Sources interested in being approved to supply PG-binders to the Department by use of an "in-line blending system," must record properties of blended material, and additives used. **6.** Each source of supply of PG-binder must indicate that the binders contain no additives used to modify or enhance their performance properties. Binders that are manufactured using additives, modifiers, extenders, etc., shall disclose the type of additive, percentage and any handling specifications or limitations required. **7.** All AASHTO M 320 references shall be replaced with AASHTO M 332. **8.** Each year, in April and September, the supplier shall submit test results for 2 BBR testing at 2 different temperatures in accordance with AASHTO R 29. Suppliers shall provide AASHTO M 332 testing results and split samples at a minimum of 1 per lot.

CONNECTICUT
SUPPLEMENTAL SPECIFICATION
SECTION M.06
METALS

M.06.01 – Reinforcing Steel:

1. Bar Reinforcement:

Delete the third paragraph and replace it with:

"Epoxy coated bar reinforcement shall conform to the requirements of ASTM A615/A615M, Grade 60 (420) and shall be epoxy coated to the requirements of ASTM A775/A775M. All field repairs of the epoxy coating shall meet the requirements of ASTM D3963/D3963M."

M.06.02—Structural Steel and Other Structural Materials:

Delete the entire article and replace it with the following:

"M.06.02—Structural Steel: The materials for this work shall meet the following requirements:

1. Structural Steel:

Structural steel for bridges shall conform to the designation shown on the plans. Unless otherwise indicated in the plans or specifications, structural steel for non-bridge related members or components shall conform to ASTM A709/A709M, Grade 36 (250).

All surfaces of steel plates and shapes used in the fabrication of bridge girders shall be blast cleaned and visually inspected by the Contractor prior to any fabrication or preparation for fabrication. Blast cleaning shall conform to the requirements of SSPC-SP-6-Commercial Blast.

All steel plates and shapes used in the fabrication of bridge girders shall be substantially free from pitting and gouges, regardless of the cause. Substantially free is defined as:

- The measured surface area of all pits and gouges regardless of depth represent less than 1% of the surface area of the plate or shape.
- No pit or gouge greater than 1/32 in (0.08mm) deep.
- No pit or gouge closer than 6 in (15.25 cm) from another.

Any repair of plates or shapes will be performed in accordance with ASTM A6/A 6M.

2. Anchor Bolts:

Unless otherwise designated on the plans, anchor bolts, including suitable nuts and washers, shall meet the following requirements:

Anchor bolt assemblies shall meet the requirements of ASTM F1554, Grade 36 (250). All components of the bolt assembly shall be galvanized in conformance with ASTM A153/A153M.

Certified Test Reports and Material Samples: The Contractor shall submit notarized copies of Certified Test Reports in accordance with Article 1.06.07. Prior to incorporation into the work, the Contractor shall submit samples of the anchor bolt assemblies to the Engineer for testing in accordance with the latest edition of the

"Schedule of Minimum Requirements for Acceptance Testing". One (1) sample shall be submitted for each diameter, material designation, grade or coating of anchor bolt assembly.

3. **High Strength Bolts:** High strength bolts, including suitable nuts and hardened washers, shall meet the following requirements:
   a) High strength bolts shall conform to ASTM A325 or ASTM A490 as shown on the plans. High-strength bolts used with coated steel shall be mechanically galvanized, unless otherwise specified. High-strength bolts used with uncoated weathering grades of steel shall be Type 3.

      Nuts for ASTM A325 bolts shall conform to ASTM A563, grades DH, DH3, C, C3 and D. Where galvanized high-strength bolts are used, the nuts shall be galvanized, heat treated grade DH or DH3. Where Type 3 high-strength bolts are used, the nuts shall be grade C3 or DH3.

      Nuts for ASTM A490 bolts shall conform to the requirements of ASTM A563, grades DH and DH3. Where Type 3 high-strength bolts are used, the nuts shall be grade DH3.

      All galvanized nuts shall be lubricated with a lubricant containing a visible dye of any color that contrasts with the color of the galvanizing. Black bolts must be oily to the touch when delivered and installed.

      Circular flat and square or rectangular beveled, hardened steel washers shall conform to ASTM F436. Unless otherwise specified, galvanized washers shall be furnished when galvanized high-strength bolts are specified, and washers with atmospheric corrosion resistance and weathering characteristics shall be furnished when Type 3 high-strength bolts are specified.

      Compressible-washer-type direct tension indicator washers, used in conjunction with high strength bolts, shall conform to ASTM F959. Where galvanized high-strength bolts are used, the washers shall be galvanized in accordance with ASTM B695, Class 50. Where Type 3 high-strength bolts are used, the washers shall be galvanized in accordance with ASTM B695, Class 50 and coated with epoxy.
   b) **Identifying Marks:** ASTM A325 for bolts and the specifications referenced therein for nuts require that bolts and nuts manufactured to the specification be identified by specific markings on the top of the bolt head and on one face of the nut. Head markings must identify the grade by the symbol "A325", the manufacturer and the type, if Type 2 or 3. Nut markings must identify the grade, the manufacturer and if Type 3, the type. Markings on direct tension indicators must identify the manufacturer and Type "325". Other washer markings must identify the manufacturer and if Type 3, the type.

      ASTM A490 for bolts and the specifications reference therein for nuts require that bolts and nuts manufactured to the specifications be identified by specific markings on the top of the bolt head and on one face of the nut. Head markings must identify the grade by the symbol "A490", the manufacturer and the type, if Type 2 or 3. Nut markings must identify the grade, the manufacturer and if Type 3, the type. Markings on direct tension indicators must identify the manufacturer and Type "490". Other washer markings must identify the manufacturer and if Type 3, the type.
   c) **Dimensions:** Bolt and nuts dimensions shall conform to the requirements for Heavy Hexagon Structural Bolts and for Heavy Semi-Finished Hexagon Nuts given in ANSI Standard B18.2.1 and B18.2.2, respectively.
   d) **Galvanized Bolts:** Galvanized bolts shall conform to ASTM A325, Type 1. The bolts shall be hot-dip galvanized in accordance with ASTM A153, Class C

or mechanically galvanized in accordance with ASTM B695, Class 50. Bolts, nuts, and washers of any assembly shall be galvanized by the same process. The nuts shall be overtapped to the minimum amount required for the fastener assembly, and shall be lubricated with a lubricant containing a visible dye so a visual check can be made for the lubricant at the time of field installation. Galvanized bolts shall be tension tested after galvanizing. ASTM A 490 bolts shall not be galvanized.

e) **Test Requirements:** The maximum hardness of A325 bolts 1" or less in diameter shall be 33 HRC.

Plain, ungalvanized nuts shall have a minimum hardness of 89 HRB.

Proof load tests, in accordance with the requirements of ASTM F606 Method 1, shall be required for the bolts. Wedge tests of full-size bolts are required in accordance with Section 8.3 of ASTM A325. Galvanized bolts shall be wedge tested after galvanizing. Proof load tests of ASTM A563 are required for nuts. Proof load tests for nuts used with galvanized bolts shall be performed after galvanizing, overtapping and lubricating.

Rotational-capacity tests are required and shall be performed on all plain or galvanized (after galvanizing) bolt, nut and washer assemblies by the manufacturer or distributor prior to shipping and by the Contractor at the Site.

The thickness of galvanizing on bolts, nuts and washers shall be measured. On bolts, it shall be measured on the wrench flats or on top of the bolt head, and on nuts it shall be measured on the wrench flats.

f) **Certified Test Reports and Materials Certificates:** The Contractor shall submit notarized copies of Certified Test Reports and Materials Certificates in conformance with Article 1.06.07 for fastener assemblies. In addition the Certified Test Reports and Materials Certificates shall include the following:

a. Mill test reports shall indicate the place where the material was melted and manufactured.
b. Test reports for proof load tests, wedge tests, and rotational-capacity tests shall indicate where the tests were performed, date of tests, location of where the components were manufactured and lot numbers.
c. The test report for galvanized components shall indicate the thickness of the galvanizing.

g) **Material Samples:** Prior to incorporation into the work, the Contractor shall submit samples of the bolt assemblies to the Engineer for testing in accordance with the latest edition of the “Schedule of Minimum Requirements for Acceptance Testing”. Samples shall be submitted for each diameter, length, material designation, grade, coating and manufacturer of bolt assembly.

4. Welded Stud Shear Connectors:

a) **Materials:** Stud shear connectors shall meet the requirements of ASTM A108, cold-drawn bar, Grades 1015, 1018 or 1020, either semi- or fully-killed. If flux-retaining caps are used, the steel for the caps shall be of a low carbon grade suitable for welding and shall comply with ASTM A 109.

Stud shear connectors shall be of a design suitable for electrically end-welding to steel with automatically timed stud welding equipment. The studs shall be of the sizes and dimensions noted on the plans. Flux for welding shall be furnished with each stud, either attached to the end of the stud or combined with the arc shield for automatic application in the welding operation. Each stud shall be furnished with a disposable ferrule of sufficient strength to remain intact during

the welding operation and not crumble or break; it shall not be detrimental to the weld or create excessive slag.

Tensile properties, as determined by tests of bar stock after drawing or of finished studs, shall meet the following requirements in which the yield strength is as determined by the 0.2% offset method:

Tensile strength (min.)	60,000 psi (415 mPa)
Yield strength (min.)	50,000 psi (345 mPa)
Elongation (min.)	20% per 2 in (50 mm)
Reduction of area (min.)	50%

b) Test Methods: Tensile properties shall be determined in accordance with the applicable sections of ASTM A370. Tensile tests of finished studs shall be made on studs welded to test plates using a test fixture similar to that shown in Figure 7.2 of the current AASHTO/AWS D1.5 – Bridge Welding Code. If fracture occurs outside of the middle half of the gage length, the test shall be repeated.

c) Finish: Finished studs shall be of uniform quality and condition, free from injurious laps, fins, seams, cracks, twists, bends or other injurious defects. Finish shall be as produced by cold-drawing, cold-rolling or machining.

d) Certified Test Reports and Materials Certificates: The Contractor shall submit a certified copy of the in-plant quality control test report in accordance with Article 1.06.07. The Contractor shall submit a Materials Certificate in accordance with Article 1.06.07 for the welded studs.

e) Sample Materials for Testing: Prior to incorporation into the work, the Contractor shall submit samples of the stud shear connectors to the Engineer for testing in accordance with the latest edition of the "Schedule of Minimum Requirements for Acceptance Testing." One (1) sample shall be submitted for each diameter and length of welded stud."

CONNECTICUT
SUPPLEMENTAL SPECIFICATION
SECTION M.08
DRAINAGE

Delete the entire Section and replace with the following:

SECTION M.08
DRAINAGE

M.08.01 – Pipe
General
Iron/Steel

1. **Cast Iron Pipe**
2. **Coated Corrugated Metal Pipe and Coated Corrugated Metal Pipe Elbows**
3. **Perforated or Plain Coated Metal Pipe for Underdrains or Outlets**
4. **Coated Corrugated Metal Pipe Arches**
5. **Corrugated Structural Plates and Bolts**
6. **Metal Culvert Ends**

Concrete

7. **Reinforced Concrete Pipe**
8. **Reinforced Concrete Elliptical Pipe**
9. **Perforated Reinforced Concrete Pipe for Underdrains and Outlets**
10. **Slotted Drain Pipe**
11. **Reinforced Concrete Culvert Ends**

Aluminum

12. **Corrugated Aluminum Pipe**
13. **Corrugated Aluminum Pipe for Underdrains and Outlets**
14. **Corrugated Aluminum Pipe Arches**

Sealers/Gaskets

15. **Cold-Applied Bituminous Sealer**
16. **Preformed Plastic Gaskets**
17. **Flexible, Watertight, Rubber-Type Gaskets**

Plastic

18. **Corrugated Polyethylene Pipe**
19. **Geotextiles**
20. **Polyvinyl Chloride Plastic Pipe**
21. **Polyvinyl Chloride Gravity Pipe**

M.08.02 – Catch Basins, Manholes, and Drop Inlets

1. **Brick for Catch Basins, Manholes or Drop Inlets**
2. **Concrete Building Brick for Catch Basins, Manholes or Drop Inlets**
3. **Masonry Concrete Units for Catch Basins, Manholes or Drop Inlets**
4. **Precast Units for Drainage Structures**
5. **Metal for Drainage Structures**

M.08.03 – Aggregates

1. **Bedding Material**
2. **Aggregates for Underdrains**

M.08.01 – Pipe

General

The Contractor shall submit manufacturer's material certifications for all metal and plastic pipes other than PVC, metal pipe-arches, metal fittings and metal coupling bands in accordance with Section 1.06.07.

IRON/STEEL

1. **Cast Iron Pipe:** This material shall meet the requirements of AASHTO M 64 for Extra-Heavy Cast Iron Culvert Pipe.
2. **Coated Corrugated Metal Pipe and Coated Corrugated Metal Pipe Elbows:** This material shall meet the following requirements:

Pipe fabricated from zinc-coated steel sheet and aluminum-coated (Type 2) steel sheet must meet the requirements of AASHTO M 36, Type 1 or IR.

Pipe fabricated from metallic-coated and polymer-precoated steel sheet must meet the requirements of AASHTO M 245, Type 1.

Unless otherwise indicated on the plans, the corrugation size and sheet thickness shall conform to the following:

Nominal Inside Diameter (inches)	Corrugations	Minimum Specified Sheet Thickness (inches)	
6	1 1/2" X 1/4"	.052	
8, 10	1 1/2" X 1/4"	.064	
12, 15, 18 & 21	2 2/3" X 1/2"	.064	
24, 30 , 36	2 2/3" X 1/2"	.079	
42, 48	2 2/3" X 1/2"	.109	
54, 60	3" X 1" or 5” X 1”	.064	
66, 72	3" X 1" or 5” X 1”	.079	
78, 84, 90, & 96	3" X 1" or 5” X 1”	.109	
		Steel	Aluminum
18, 24, 30	Helical Rib ¾” X ¾ “ X 7 ½”	.064	.060
36	Helical Rib ¾” X ¾ “ X 7 ½”	.064	.075
42, 48 & 54	Helical Rib ¾” X ¾ “ X 7 ½”	.079	.105
60, 66, 72, 78, 84	Helical Rib ¾” X ¾ “ X 7 ½”	.109	.135

Aluminum pipe sheet thickness may be 0.004 in less than specified above for 1 1/2-in x 1/4-in, 2 2/3-in x 1/2-in and 3-in x 1-in or 5-in x 1-in corrugations. Helical Rib shall be as specified above.

Zinc coated steel pipe, fittings, and coupling bands shall be coated with bituminous material as specified in AASHTO M 190 Type C. Pipe, fittings and coupling bands

fabricated from aluminum coated steel sheet (Type 2) does not require coating of bituminous material or paved invert.

Metallic-coated and polymer-precoated steel pipe, fittings, and coupling bands shall be coated as specified in AASHTO M 246, Type B. The thicker polymeric coating shall be on the inside of the pipe.

Only one type of coating will be allowed for any continuously connected run of pipe.

If elongation of the pipe is required, it shall be done by the manufacturer.

3. Perforated or Plain Coated Metal Pipe for Underdrains or Outlets: This material shall meet the requirements of AASHTO M 36, Type III or AASHTO M 245, Type III.

(a) Perforations: The minimum diameter of perforations after asphalt coating shall be 1/4 in.

(b) Coating: All requirements of M.08.01-2 shall apply except that the minimum thickness of the bituminous coating on zinc coated steel pipe, fittings, and coupling bands pipe shall be 0.03 in instead of 0.05 in.

4. Coated Corrugated Metal Pipe-Arches: This material shall meet the requirements of AASHTO M 36, Type II, Type IIR or AASHTO M 245, Type II. All coating requirements of M.08.01-1 shall apply.

Unless otherwise indicated on the plans, the corrugation size and sheet thickness shall conform to the following:

Pipe-Arch Equivalent Diameter (Inches)	Corrugations	Minimum Sheet Thickness (Inches)
15, 18, 21	2 2/3" X 1/2"	.064
24, 30	2 2/3" X 1/2"	.079
36, 42, 48	2 2/3" X 1/2"	.109
54, 60	2 2/3" X 1/2"	.138
60, 66, 72	3" X 1" or 5” X 1”	.079
78, 84, 90, 96	3" X 1" or 5” X 1”	.109
18, 21, 24	Helical Rib ¾” X ¾ “ X 7 ½”	.064
30, 36	Helical Rib ¾” X ¾ “ X 7 ½”	.079
42, 48, 54, 60	Helical Rib ¾” X ¾ “ X 7 ½”	.109

5. Corrugated Structural Plates and Bolts: These plates and bolts are for use in the construction of metal pipe of the large diameter and for metal plate arches or pipe arches to be assembled in the field, and they shall meet the requirements of AASHTO M 167 for corrugated metal pipe.

The dimensions of plates and details of fabrication shall meet the requirements of the manufacturer. Where the plans call for a heavier gage for the bottom of the pipe than for the remainder of the pipe circumference, the lower fourth of the circumference shall be the minimum width of the heavier gage material.

The coating shall meet the requirements of AASHTO M 243.

6. Metal Culvert End: The materials used in this work shall meet the pertinent requirements of Articles M.08.01-2 and M.08.01-4.

Bolts and fittings shall meet the requirements of ASTM A307 and shall be galvanized to conform to the requirements of ASTM A153.

The units shall be coated as specified in Articles M.08.01-2, M.08.01-4 or M.08.01-5.

Fabrication: These units shall be formed from a rectangular sheet of metal by cutting and bending to form the desired shape. Two or more sheets may be fastened together by riveting or bolting so as to form a rectangular sheet of the required width. Skirt extensions and a top plate, as needed to complete the unit, shall be separately formed. Skirt extensions shall be riveted or bolted to the skirt.

All edges, which will be exposed above the surface of the ground, shall be reinforced before forming the unit by either of the following means:

(1) The edge shall be bent to form a semicircular roll with an exterior diameter of 1 in, as shown in the detail drawing on the plans.

(2) A split tube of 1 in outside diameter and not lighter than 14 gage, shall be slipped over a row of rivets spaced not more than 6 in apart, as shown in the detail drawing on the plans.

One (1) corrugation, matching the corrugations of the pipe or pipe-arch to which the unit is to be attached, shall be formed in the unit to ensure secure and accurate alignment.

Attachment: The unit may be shop-riveted to a length of the appropriate pipe or pipe-arch, or may be field attached to the pipe or pipe arch by either of the other attachment systems shown on the plans, or by other means acceptable to the Engineer. If the unit is shop-riveted to a length of pipe or pipe-arch, this length shall be sufficient to permit proper use of standard coupling bands.

CONCRETE

7. Reinforced Concrete Pipe: Unless otherwise specified, this material shall conform to the requirements of AASHTO M 170, Class IV, as supplemented and modified by the following:

(a) Reinforcement: In circular pipe, only circular reinforcement will be allowed.

(b) Laps and Welds: The reinforcement shall be lapped not less than 2 in and welded with an electric welding machine.

(c) Quality Assurance Testing: Circular and elliptical reinforced concrete pipe shall be tested by the three-edge bearing method prescribed in AASHTO T 280, except as follows:

1) Modified or special design pipe shall be tested to the 0.01-in load and the ultimate load requirements as per AASHTO M 170 and M 207.

2) At the discretion of the Engineer, pipe of standard design, as specified in AASHTO M 170 and M 207, may be tested to the 0.01-in requirement plus 10% additional load in lieu of ultimate load testing. Test pipe attaining a 0.01-in crack will not be acceptable for use on Department projects.

3) Cores for absorption and determination of steel reinforcement shall be taken on a random basis as determined by the Engineer. The cores shall be at least 6 in diameter.

(d) Inspection: The pipe plant, materials, processes of manufacture and the finished pipe shall be subject to inspection and approval by the Department. The pipe manufacturer's records related to component materials, production and shipment of pipe for Department use shall be made available to the Department on request. The equipment and labor necessary for inspection, sampling and

testing as required by the Department shall be furnished by the pipe manufacturer. Test equipment shall be calibrated at least once each 12 months, or as directed by the Engineer. The plant cement and aggregate scales shall be inspected and sealed by the approved agency at least once every twelve months.

(e) Preliminary Tests and Tests for Extended Deliveries: As directed by the Engineer, the Department shall select for test from the stock of any manufacturer proposing to supply pipe to the Department, 2 of each size pipe up through 30-in diameter and 1 of each size greater than 30-in diameter. These sample pipes shall be tested under Department supervision by the three-edge bearing method. For pipe that fails, it shall be necessary for the manufacturer to either physically isolate the rejected pipe at the plant or to provide some means to clearly indicate the unacceptability of the pipe. Either method shall be performed to the satisfaction of the Engineer. When production is resumed on any size, wall thickness or class previously rejected, preliminary tests shall be required. If 95% of all pipe tested at a particular plant from the first of the calendar year to September 30 meet specifications, including both preliminary and extended tests, it will not be necessary to perform the Fall three-edge bearing tests at this plant.

Use of compression tests on representative cylinders or cores to determine the compressive strength of the concrete incorporated into the pipe products will be at the discretion of the Engineer.

(f) Shipping: Pipe shall not be shipped until it is at least 7 days old unless earlier shipment is authorized by the Engineer on the basis of tests.

(g) Certification: Pipe will be accepted by the Department on the basis of manufacturer's certification. The manufacturer shall certify each shipment of pipe on Department Form MAT-073(PC-1), "Certification of Precast Concrete Products." Two (2) copies of this certification shall be furnished with the shipment to the Engineer at the Project site.

8. Reinforced Concrete Elliptical Pipe: This material shall meet the requirements of AASHTO M 207, Class HE IV and supplemented as follows:

(a) Manufacturing and testing shall conform to Subarticle M.08.01-7.

9. Perforated Reinforced Concrete Pipe for Underdrains and Outlets: This material shall meet the requirements of Subarticle M.08.01-7 and shall be slotted in accordance with AASHTO M 175, Type 2, or as shown on the plans. Pipe for outlets shall not be perforated.

10. Slotted Drain Pipe: The pipe shall be asphalt coated and be as specified in Subarticle M.08.01-2. Concrete shall be as specified in Article M.03.01, Class "A" or pavement type. Concrete shall be cured in accordance with M.03. The inlet aperture shall be longitudinal on top of the pipe and may be continuous or intermittent. The opening in the pipe wall may be fabricated in the form of continuous bar risers and spacers or of intermittent cut-out segments with structural members supporting a continuous grating as indicated in the plans. End caps shall be as provided by the manufacturer.

Elastomeric polymer sealer shall meet the physical requirements of ASTM D3406 and be accepted on manufacturer's certification.

The pipe shall be helically corrugated with a continuous welded or lock seam. Pipe ends shall have 2 rolled annular corrugations on each end for jointing.

Bar Riser and Spacer Type: Riser assemblies shall be fabricated from structural steel, in accordance with the dimensions on the plans. The riser assemblies shall be hot dipped galvanized according to ASTM A123. The assemblies shall be welded to the

corrugated pipe on each side of the riser at the location of the solid web spacers. The riser shall terminate 1 in from the ends of each pipe length to allow clearance for single bolt coupling bands. The ends of the riser shall be closed with a suitable welded plate where solid web spacers do not come to the ends of the riser.

The maximum deviation from straight in both the vertical and horizontal plane of the riser assembly shall not exceed 3/4 in per 20-ft length.

Continuous Grating Type: The cut-out pipe segments shall provide a 2-in wide slot of maximum length between the lock seams. The slot shall be left intact 1 in on each side of the lock seam and this material shall be used to fasten the reinforcing bar in place.

A bent epoxy coated reinforcing bar shall cross the slotted opening on 6-in centers.

The reinforcing bar shall be an ASTM A 615, No. 13, deformed bar epoxy coated with 7 mils of fusion bonded epoxy powder meeting the requirements of AASHTO M 284.

Grating shall be furnished unless noted in the Contract. Grating and all bearing bars, cross bars, and bent connecting bars shall be welding quality, mild carbon steel meeting the requirements of ASTM A569 and shall be the dimensions shown on the plans.

Tie down bolts shall be J-Type bolts, plated, ASTM A307 steel supplied with self-locking nuts.

Concrete forms shall be of cellular foam plastic base, fabricated as an integral part of the pipe and reinforcing bar assembly. The form shall be capped with a thick wood or plastic cap resting on top of the foam plastic and reinforcing bar.

The maximum deviation from straight in both the vertical and horizontal plane of the completed assembly shall not exceed 3/4 in in a 20-ft length. All grating and hardware shall be galvanized in conformance with Article M.06.03. Expansion joint filler shall be as specified in M.03.

11. Reinforced Concrete Culvert End: The barrel shall meet the requirements of AASHTO M 170, Class II, except that the three-edge bearing tests will not be required. The flare shall be of the same thickness and materials as the barrel and shall have steel reinforcement equaling or exceeding the amount shown on the table for the pertinent size.

Tongues and grooves shall be compatible with tongues and grooves of pipe meeting AASHTO M 170, Class IV.

Air entrainment shall be added to these units so as to maintain 5 to 8% entrained air.

ALUMINUM

12. Corrugated Aluminum Pipe: This material shall meet the requirements of AASHTO M 196 Type I or Type IR. Sheet thickness shall meet the requirements of M.08.01-2.

13. Corrugated Aluminum Pipe for Underdrains and Outlets: This material shall meet the requirements of AASHTO M 196, Type III or Type IIIR. Sheet thickness shall meet the requirements of M.08.01-2. Pipe for outlets shall not be perforated.

14. Corrugated Aluminum Pipe Arches: These pipe arches shall meet the requirements of AASHTO M 196, Type II or Type IIR. Sheet thickness shall meet the requirements of M.08.01-4.

SEALERS/GASKETS

15. Cold-Applied Bituminous Sealer: This material, for use in sealing of joints in concrete pipes, shall be free of asbestos and shall meet the following requirements:

It shall be of such consistency that it may be spread on the joints with a trowel when the temperature of the air is between -20° F and 100° F. The bituminous material shall

adhere to the concrete pipe so as to make a watertight seal and shall not flow, crack or become brittle when exposed to the atmosphere.

Unless otherwise specified, sampling shall be done in accordance with AASHTO T 40.

The bituminous sealer shall be delivered to the Project in suitable containers for handling and shall be sealed or otherwise protected from contamination. The container shall show the brand name, net mass or volume, and the requirements for application.

16. Preformed Plastic Gaskets: This material for use in sealing of joints in concrete pipe shall conform to the requirements of ASTM C1478.

17. Flexible, Watertight, Rubber-Type Gaskets: This material for use in sealing concrete pipe joints shall conform to the requirements of ASTM C443.

PLASTIC

18. Corrugated Polyethylene Pipe: Corrugated Polyethylene Pipe, either corrugated interior surface (Type C) or smooth interior surface (Type S) without perforations or with perforations (Type CP or SP), shall meet the requirements of AASHTO M 252 or M 294. Type D pipe shall have a smooth interior surface braced circumferentially or spirally with projections or ribs joined to a smooth outer wall. Both surfaces shall be fused to, or be continuous with, the internal supports. Type D shall meet the requirements of AASHTO M 294.

19. Geotextiles: The geotextile shall be non-rotting, acid and alkali resistant, and have sufficient strength and permeability for the purpose intended including handling and backfilling operations. Fibers shall be low water absorbent. The fiber network must be dimensionally stable and resistant to delamination. The geotextile shall be free of any chemical treatment or coating that will reduce its permeability. The geotextile shall also be free of any flaws or defects which will alter its physical properties. Torn or punctured geotextiles shall not be used. For each specific use, only geotextiles that are already on the Connecticut Department of Transportation's Qualified Products List for the geotextile type will be used. The Engineer reserves the right to reject any geotextile deemed unsatisfactory for a specific use. The brand name shall be labeled on the geotextile or the geotextile container. Geotextiles that are susceptible to damage from sunlight or heat shall be so identified by suitable warning information on the packaging material.

Geotextiles susceptible to sunlight damage shall not be used in any installations where exposure to light will exceed 30 days, unless specifically authorized in writing by the Engineer.

20. Polyvinyl Chloride Plastic Pipe: The pipe shall meet the requirements of ASTM D 1785. Couplings and elbows shall conform to the requirements of ASTM D2466 or D2467.

21. Polyvinyl Chloride Gravity Pipe: This pipe shall meet one of the following specifications: ASTM F789, ASTM F679, or ASTM F794.

M.08.02—Catch Basins, Manholes, and Drop Inlets: The materials to be used in the construction shall meet the following:

1. Brick for Catch Basins, Manholes or Drop Inlets: Brick for catch basins, manholes or drop inlets shall meet the requirements of ASTM C32, except that the depth shall be 2-1/4 in, the width 3-5/8 in, and the length 8 in, and except that the maximum water-absorption by 5-hour boiling shall not exceed the following limits:

Average of 5 bricks	15%
Individual brick	18%

2. Concrete Building Brick for Catch Basins, Manholes or Drop Inlets: Concrete building brick for catch basins, manholes, or drop inlets shall meet the requirements of ASTM C55, Grade S II.

3. Masonry Concrete Units for Catch Basins, Manholes or Drop Inlets: Masonry concrete units for catch basins, manholes, or drop inlets shall meet the requirements of ASTM C139.

4. Precast Units for Drainage Structures: Precast units for drainage structures may be used except where particular conditions require building or casting structures in place.

Fabrication plants shall have a quality control plan approved by the Division Chief of Materials Testing that is demonstrated to the satisfaction of the Engineer. The facility, the quality of materials, the process of fabrication, and the finished precast units shall be subject to inspection by the Engineer.

Precast manholes shall meet the requirements of AASHTO M 199 (ASTM C478).

Circular precast catch basins and drop inlets shall meet the requirements of AASHTO M 199 (ASTM C478) as supplemented below. Rectangular precast catch basins and drop inlets shall meet the requirements of ASTM C913 as supplemented below:

All materials used for concrete shall meet the requirements of Section M.03.

The pertinent provisions of Article 6.01.03 shall apply except that the concrete shall contain 5.0%-8.0% entrained air. Water-absorption of individual cores taken from precast units shall be not more than 7%.

Reinforcement shall meet the requirements of Article M.06.01.

Suitable provision shall be made in casting the units for convenient handling of the completed casting, and additional reinforcement steel shall be provided to allow for such handling in the casting yard and during transportation and placement. Each completed unit shall be identified with the name of manufacturer and date of the concrete pour from which it was cast, either by casting this information into an exposed face of the unit or by suitable stencil. For each day's production of precast units, the fabricator shall mold, cure, and test standard cylinders, or cylinders compacted in a similar manner to the parent precast units, for the purpose of determining the compressive strength of the concrete incorporated into the precast units. Concrete used in molding the cylinders shall be representative of the concrete incorporated into the precast units during the production period. Cylinders shall be molded in accordance with AASHTO T 23, cured by the same method as the units they represent, and tested as prescribed in AASHTO T 22.

The fabricator shall determine the air content of the concrete used in the day's production of precast units by performing tests as prescribed in AASHTO T 152.

The equipment and personnel necessary to perform the required testing shall be furnished by the fabricator and approved by the Engineer. All testing equipment shall be calibrated at least once each 12 months or as directed by the Engineer. The fabricator shall maintain records relative to the production, testing, and shipment of precast units supplied to the Department. Said records shall be available to a representative of the Department upon his request.

The Department may accept precast concrete units on the basis of fabricator’s certification. The fabricator shall certify each shipment of precast concrete units on Department Form MAT 314 (PC-1), "Certification of Precast Concrete Products." Two (2) copies of this certification shall be furnished with the shipment to the Engineer at the Project Site.

Precast units that are cracked, show evidence of honeycomb, or have over 10% of their surface area patched may be subject to rejection, even though meeting other requirements.

5. Metal for Drainage Structures: Metal for catch basins, drop inlet and manhole frames, extensions, covers, and gratings shall be cast iron, cast steel, structural steel or malleable iron meeting the requirements of the plans. Covers and gratings shall bear uniformly on their supports.

Extensions shall be designed so that the existing manhole cover or catch basin grate, when set in place, will have substantially the same bearing, fit, and load carrying capacity as in the existing frame. The extension shall be designed to fit into the original frame, resting specifically on the flange and rim area. The extension shall accept the existing cover or grate so that the cover or grate is seated firmly without movement.

Ladder rungs for manholes shall conform to AASHTO M 199 (ASTM C478).

Cast iron shall meet the requirements of AASHTO M 105, Class 25 for the frames and Class 30 for grates.

Cast steel shall meet the requirements of ASTM A27, Grade optional, and shall be thoroughly annealed.

Structural Steel shall meet the requirements of ASTM A36, or A283, Grade B or better, as to quality and details of fabrication, except that in the chemical composition of the steel, the 2/10 of 1% of copper may be omitted.

Malleable iron shall conform to the requirements of ASTM A47, Grade 22010.

The materials and method of manufacture for drop inlets shall meet the requirements as stated on the plans or as ordered.

M.08.03—Aggregates

1. Bedding Material: Material for pipe bedding shall be sand or sandy soil, all of which passes a 3/8-in sieve and not more than 10% passes a No. 200 sieve.

When ground water is encountered, the Engineer may allow No. 6 stone as specified in Article M.01.01 to be used instead of sand or sandy soil.

2. Aggregates for Underdrains: Materials for filling the trench shall consist of well-graded, clean, non-plastic sands or well-graded, clean, durable broken stone or screened gravel. Unless otherwise noted, the type of material to be used shall be sand.

Sand: This material shall meet the requirements of Subarticle M.03.01-2

Broken Stone or Screened Gravel: This material shall conform to the gradation requirements for Size No. 8 under Article M.01.01.

CONNECTICUT
SUPPLEMENTAL SPECIFICATION
SECTION M.11
MASONRY FACING
CEMENT AND DRY RUBBLE MASONRY
BRICK
MORTAR

M.11.01 – Masonry Facing:

1. **Masonry Facing Stone:**

Delete the third sentence:

"Preferably, the stone shall be from a quarry the product of which is known to be of satisfactory quality."

Delete **"2. : Vacant:"**

M.11.04—Mortar:

Delete the entire article and replace it with the following:

M.11.04—Mortar: Mortar shall be either Pre-blended or Pre-packaged material conforming to:

ASTM C1714 - Standard Specification for Pre-blended Dry Mortar Mix for Unit Masonry;

ASTM C387 - Standard Specification for Packaged, Dry, Combined Materials for Concrete and High Strength Mortar;

or be composed of one part Portland cement and two parts, by volume, of surface dry fine aggregate blended on site.

Hydrated lime, in an amount not to exceed 4 pounds (1.8 kilograms) of lime to each bag of cement, may be added when the material is blended on site at the option of the Engineer. Cement and hydrated lime shall conform to the following requirements:

(a) **Portland cement, Types I, II or IS, and water** shall conform to the requirements of Article M.03.

(b) **Hydrated lime** shall conform to the requirements of ASTM C 6.

When mortar is mixed on the project site, **fine aggregate** shall conform to Grading A or B as indicated in the table below, and to the requirements of Section M.03. For laying stone, precast units, or for shotcrete, fine aggregate shall conform to Grading A. For pointing stone or the precast units and for laying brick or sealing pipe joints, the fine aggregate shall conform to Grading B.

Table of Gradation, Fine Aggregate for Mortar

Square Mesh Sieves	**Grading**	
	A	B
	Percentage Passing by weight (mass)	
Pass 3/8 inch (9.5 millimeters)	100	
Pass #4 (4.75 millimeters)	95-100	
Pass #8 (2.36 millimeters)	80-100	100
Pass #16 (1.18 millimeters)	50-85	
Pass #30 (600 microns)	25-60	
Pass #50 (300 microns)	10-30	10-40
Pass #100 (150 microns)	2-10	0-10

CONNECTICUT
SUPPLEMENTAL SPECIFICATION
SECTION M.13
ROADSIDE DEVELOPMENT

M.13.01—Topsoil:

Delete the entire article and replace it with the following:

" **M.13.01 – Topsoil:** The term topsoil used herein shall mean a soil meeting the soil textural classes established by the USDA Classification System based upon the proportion of sand, silt, and clay size particles after passing a No. 10 (2 millimeter) sieve and subjected to a particle size analysis. The topsoil shall contain 5% to 20% organic matter as determined by loss on ignition of oven-dried samples dried at 221° F (105° C). The pH range of the topsoil shall be 5.5 to 7.0.

The following textural classes shall be acceptable:

Loamy sand, including coarse, loamy fine, and loamy very fine sand, with not more than 80% sand
Sandy loam, including coarse, fine and very fine sandy loam
Loam
Clay loam, with not more than 30% clay
Silt loam, with not more than 60% silt
Sandy clay loam, with not more than 30% clay
All textural classes of topsoil with greater than 80% sand content will be rejected.

The topsoil furnished by the Contractor shall be a natural, workable soil that is screened and free of subsoil, refuse, stumps, roots, brush, weeds, rocks and stones over 1 1/4 inches (30 millimeters) in diameter, and any other foreign matter that would be detrimental to the proper development of plant growth.

The Contractor shall notify the Engineer of the location of the topsoil at least 15 calendar days prior to delivery. The topsoil and its source shall be inspected and approved by the Engineer before the material is delivered to the project. Any material delivered to the project, which does not meet specifications or which has become mixed with undue amounts of subsoil during any operation at the source or during placing and spreading, will be rejected and shall be replaced by the Contractor with acceptable material.

When topsoil is not furnished by the Contractor, it shall be material that is stripped in accordance with Section 2.02 or is furnished by the State, and will be tested as determined by the Engineer.

1. Planting Soil: Soil Material to be used for plant backfill shall be one of the following textural classes:

Loamy sand, with not more than 80% sand
Sandy loam
Loam
Clay loam, with not more than 30% clay
Silt loam, with not more than 60% silt
Sandy clay loam, with not more than 30% clay

Planting soil shall be premixed, consisting of approximately 50 % topsoil, 25 % compost or peat, and 25% native soil. Planting soil shall be loose, friable, and free from refuse, stumps, roots, brush, weeds, rocks and stones 2 inches (50 millimeters) in diameter. In addition, the material shall be free from any material that will prevent proper development and plant growth.

(a) For ericaceous plants and broad-leaved evergreens requiring an acid soil, planting soil shall have a true pH of 4.5 to 5.5. If it has not, it shall be amended by the Contractor at his own expense to the proper pH range by mixing with sulphur.
(b) Planting soil for general planting of nonacid-loving plants shall have a true pH value of 5.6 to 6.5. If it has not, it shall be amended by the Contractor at his own expense to the proper pH range by mixing with dolomitic limestone.

The amount of either sulphur or limestone required to adjust the planting soil to the proper pH range (above) shall be determined by the Engineer based on agronomic tests. The limestone shall conform to the requirements of Article M.13.02. The sulphur shall be commercial or flour sulphur, unadulterated, and shall be delivered in containers with the name of the manufacturer, material, analysis, and net weight (mass) appearing on each container.

The Engineer reserves the right to draw such samples and to perform such tests as he deems necessary to ensure that these specifications are met."

M.13.03 – Fertilizer:

In the last sentence of the first paragraph change "AOAC International." *to* "AOAC."

M.13.04 – Seed Mixture:

Replace Subarticle (a) *with the following:*

"(a) The grass seed mixture shall conform to the following:

Species	Proportion By Weight (Mass) Pounds (kilograms)	Minimum Purity (Percent)	Minimum Germination (Percent)
VELVET BENTGRASS, (AGROSTIS CANINA) CERTIFIED VARIETY: OR EQUAL CERTIFIED VARIETY;	25 (9.1)	96	85
RED FESCUE (FESTUCA RUBRA L. SSP. RUBRA) CERTIFIED VARIETY: OR EQUAL CERTIFIED VARIETY	35 (15.9)	97	80
PARTRIDGE PEA (CHAMAECRISTA FASCICULATA) CERTIFIED VARITEY	10 (4.5)	95	90
INDIAN GRASS (SORGHASTRUM NUTANS) CERTIFIED VARIETY:	15 (5.45)	95	90
CANADA WILDRYE (ELYMUS CANADENSIS) CERTIFIED VARIETY:	5 (2.3)	95	90
KENTUCKY BLUE GRASS (POA PRATENSIS) CERTIFIED VARIETY:	10 (4.5)	95	90

Under no circumstances should annual Ryegrass, Italian Rye, or any other seed be added to the seed mixture."

M.13.06 – Compost:

In the third to last sentence, replace "DEP" *with* "DEEP".

CONNECTICUT
SUPPLEMENTAL SPECIFICATION
SECTION M.16
TRAFFIC CONTROL SIGNALS

M.16.04 – Poles:

1. Steel Poles:

(i) Wire Entrance Fitting:

In the second sentence, delete "required to accept the cables".

M.16.06 – Traffic Signals:

9. Painting:

In the first sentence, replace "MIL" *with* "MILSPEC".

Subsection **Third Coat:**

Replace the first two sentences with the following:

"Dark Green Enamel: Shall be Dark Green exterior baked enamel and shall comply with FS A-A 2962. The color shall be No. 14056, FS No. 595."

and in the third sentence replace "MIL" *with* "MILSPEC".

M.16.08 – Pedestrian Push Button

In the last sentence of the second paragraph, change "Americans With Disabilities Act (ADA)" *to* "ADA".

Subarticle **Painting**
Subsection **Third Coat:**

Delete the entire paragraph and replace it with the following:

"**Third Coat:** Dark Green Enamel, shall be DARK GREEN exterior-baking enamel and shall comply with Federal Specifications A-A 2962. The color shall be No. 14056, Federal Standard No. 595."

M.16.10 – Flasher Cabinet:

1. Cabinet:

In subsection (f), change "Underwriter's Laboratory" *to* "UL".

M.16.15 – Messenger and Span Wire:

Delete the entire article and replace it with the following:

"M.16.15 – Messenger and Span Wire: The materials for this work shall conform to the following requirements:

1. Messenger wire shall be made of double-galvanized 7-strand utilities-grade steel wire cable, not less than 3/16 inch (4.8 millimeters) in diameter, with at least a 2,400-pound (10.7-killinewton) breaking strength.

2. Span wire:

(a) "Span wire" shall be made of double-galvanized 7-strand utilities-grade steel wire cable, not less than 3/8 inch (9.5 millimeters) in diameter, with at least an 11,200-pound (50-kilonewton) breaking strength.

(b) "Span wire (high strength)" shall be made of double-galvanized 7-strand extra-high-strength-grade steel wire cable, not less than 7/16 inch (11.1 millimeters) in diameter, with at least a 20,800-pound (94-kilonewton) breaking strength.

3. All hardware accessories shown on the plans to be used in span wire or messenger mounting shall be made of high-strength, double-galvanized, first-quality materials."

CONNECTICUT
SUPPLEMENTAL SPECIFICATION
SECTION M.17
ELASTOMERIC MATERIALS

M.17.01 – Elastomeric Bearing Pads:

2. Laminae:

In the last sentence of Subsection (a), replace “AAA 6061-T6” *with* “AA 6061-T6”.

4. Adhesive for Bonding:

In the 2nd paragraph of Subsection (b), replace “MS MIL” *with* “MILSPEC”.

CONNECTICUT
SUPPLEMENTAL SPECIFICATION
SECTION M.18
SIGNING

In the list of Articles, change "**M.18.09—Reflective Sheeting**" *to* "**M18.09—Retroreflective Sheeting**"

M.18.07—Delineators:

1. Reflectors:

In the first sentence of the first paragraph, change "reflective" *to* "retroreflective."

In the only sentence of the second paragraph, change "reflective" *to* "retroreflective."

M.18.09—Reflective Sheeting:

Delete the entire article and replace with the following:

"**M.18.09—Retroreflective Sheeting:** Retroreflective sheeting materials shall appear on the Department's Qualified Product List for the application intended and shall be in accordance with ASTM D4956."

M.18.10—Demountable Copy:

2. Type III Reflective Sheeting

*Change the title from "***Type III Reflective Sheeting***" to "***Type IV Retroreflective Sheeting***."*

In the first sentence of the first paragraph, change "reflective" *to* "retroreflective."

In the second sentence of the first paragraph, change "reflective" *to* "retroreflective" *and change "*Section M.18.09.01*" to "*Article M.18.09*."*

***3.* Non-Reflective Plastic Sheeting:**

H. <u>Solvent and Chemical Resistance:</u>

*In the chart under this subsection, replace "*MIL*" with "*MILSPEC*."*

M.18.15—Sign-Mounting Bolts:

Delete the entire article and replace with the following:

"**M.18.15—Sign-Mounting Bolts:** Bolts used for sign-mounting shall be stainless steel and meet the requirements of ASTM F593, Group 1 or 2 (Alloy Types 304 or 316). Locking nuts shall be stainless steel and shall meet the requirements of ASTM F594, Group 1 or 2 (Alloy Types 304 or 316). Washers shall also be stainless steel and shall meet the requirements of ASTM A240 (Alloy Types 304 or 316)."

Construction Contracts - Required Contract Provisions
(FHWA Funded Contracts)

Index

1. Federal Highway Administration (FHWA) Form 1273 (Revised May 1, 2012)

2. Title VI of the Civil Rights Act of 1964 / Nondiscrimination Requirements

3. Contractor Work Force Utilization (Federal Executive Order 11246) / Specific Equal Employment Opportunity

4. Requirements of Title 49, CFR , Part 26, Participation by DBEs

5. Contract Wage Rates

6. Americans with Disabilities Act of 1990, as Amended

7. Connecticut Statutory Labor Requirements

    a. Construction, Alteration or Repair of Public Works Projects; Wage Rates
    b. Debarment List - Limitation on Awarding Contracts
    c. Construction Safety and Health Course
    d. Awarding of Contracts to Occupational Safety and Health Law Violators Prohibited
    e. Residents Preference in Work on Other Public Facilities (Not Applicable to Federal Aid Contracts)

8. Tax Liability - Contractor's Exempt Purchase Certificate (CERT – 141)

9. Executive Orders (State of CT)

10. Non Discrimination Requirement (pursuant to section 4a-60 and 4a-60a of the Connecticut General Statutes, as revised)

11. Whistleblower Provision

12. Connecticut Freedom of Information Act

    a. Disclosure of Records
    b. Confidential Information

13. Service of Process

14. Substitution of Securities for Retainages on State Contracts and Subcontracts

15. Health Insurance Portability and Accountability Act of 1996 (HIPAA)

16. Forum and Choice of Law

17. Summary of State Ethics Laws

18. Audit and Inspection of Plants, Places of Business and Records

19. Campaign Contribution Restriction

20. Tangible Personal Property

21. Bid Rigging and/or Fraud – Notice to Contractor

22. Consulting Agreement Affidavit

23. Federal Cargo Preference Act Requirements (46 CFR 381.7(a)-(b))

Index of Exhibits

EXHIBIT A – FHWA Form 1273 (Begins on page 14)
EXHIBIT B – Title VI Contractor Assurances (page 35)
EXHIBIT C – Contractor Work Force Utilization (Federal Executive Order 11246) / Equal Employment Opportunity (page 36)
EXHIBIT D – Health Insurance Portability and Accountability Act of 1996 (HIPAA) (page 43)
EXHIBIT E - Campaign Contribution Restriction (page 51)
EXHIBIT F – Federal Wage Rates (Attached at the end)
EXHIBIT G - State Wage Rates (Attached at the end)

1. Federal Highway Administration (FHWA) Form 1273

The Contractor shall comply with the Federal Highway Administration (FHWA), Form 1273 attached at Exhibit A, as revised, which is hereby made part of this contract. The Contractor shall also require its subcontractors to comply with the FHWA – Form 1273 and include the FHWA – Form 1273 as an attachment to all subcontracts and purchase orders.

2. Title VI of the Civil Rights Act of 1964 / Nondiscrimination Requirements

The Contractor shall comply with Title VI of the Civil Rights Act of 1964 as amended (42 U.S.C. 2000 et seq.), all requirements imposed by the regulations of the United States Department of Transportation (49 CFR Part 21) issued in implementation thereof, and the Title VI Contractor Assurances attached hereto at Exhibit B, all of which are hereby made a part of this Contract.

3. Contractor Work Force Utilization (Federal Executive Order 11246) / Equal Employment Opportunity

(a) The Contractor shall comply with the Contractor Work Force Utilization (Federal Executive Order 11246) / Equal Employment Opportunity requirements attached at Exhibit C and hereby made part of this Contract, whenever a contractor or subcontractor at any tier performs construction work in excess of $10,000. These goals shall be included in each contract and subcontract. Goal achievement is calculated for each trade using the hours worked under each trade.

(b) Companies with contracts, agreements or purchase orders valued at $10,000 or more will develop and implement an Affirmative Action Plan utilizing the ConnDOT Affirmative Action Plan Guideline. This Plan shall be designed to further the provision of equal employment opportunity to all persons without regard to their race, color, religion, sex or national origin, and to promote the full realization of equal employment opportunity through a positive continuation program. Plans shall be updated as required by ConnDOT.

4. Requirements of Title 49, Code of Federal Regulations (CFR), Part 26, Participation by DBEs

Pursuant to 49 CFR 26.13, the following paragraph is part of this Contract and shall be included in each subcontract the Contractor enters into with a subcontractor:

"The Contractor, subrecipient or subcontractor shall not discriminate on the basis of race, color, national origin, or sex in the performance of this contract. The Contractor shall carry out applicable requirements of 49 CFR Part 26, Participation by DBEs, in the award and administration of U.S. DOT-assisted contracts. Failure by the Contractor to carry out these requirements is a material breach of this Contract, which may result in the termination of this contract or such other remedy as ConnDOT (recipient) deems appropriate."

5. Contract Wage Rates

The Contractor shall comply with:

The Federal and State wage rate requirements indicated in Exhibits F and G hereof, as revised, are hereby made part of this Contract. The Federal wage rates (Davis-Bacon Act) applicable to this Contract shall be the Federal wage rates that are current on the US Department of Labor website

(http://www.wdol.gov/dba.aspx) as may be revised 10 days prior to bid opening. These applicable Federal wage rates will be physically incorporated in the final contract document executed by both parties. The Department will no longer physically include revised Federal wage rates in the bid documents or as part of addenda documents, prior to the bid opening date. During the bid advertisement period, bidders are responsible for obtaining the appropriate Federal wage rates from the US Department of Labor website.

To obtain the latest Federal wage rates go to the US Department of Labor website (link above). Under Davis-Bacon Act, choose "Selecting DBA WDs" and follow the instruction to search the latest wage rates for the State, County and Construction Type. Refer to the Notice to Contractor (NTC) - Federal Wage Determinations (Davis Bacon Act).

If a conflict exists between the Federal and State wage rates, the higher rate shall govern.

Prevailing Wages for Work on State Highways; Annual Adjustments. With respect to contracts for work on state highways and bridges on state highways, the Contractor shall comply with the provisions of Section 31-54 and 31-55a of the Connecticut General Statutes, as revised.

As required by Section 1.05.12 (Payrolls) of the State of Connecticut, Department of Transportation's Standard Specification for Roads, Bridges and Incidental Construction (FORM 816), as may be revised, every Contractor or subcontractor performing project work on a Federal aid project is required to post the relevant prevailing wage rates as determined by the United States Secretary of Labor. The wage rate determinations shall be posted in prominent and easily accessible places at the work site.

6. Americans with Disabilities Act of 1990, as Amended

This provision applies to those Contractors who are or will be responsible for compliance with the terms of the Americans with Disabilities Act of 1990, as amended (42 U.S.C. 12101 et seq.), (Act), during the term of the Contract. The Contractor represents that it is familiar with the terms of this Act and that it is in compliance with the Act. Failure of the Contractor to satisfy this standard as the same applies to performance under this Contract, either now or during the term of the Contract as it may be amended, will render the Contract voidable at the option of the State upon notice to the contractor. The Contractor warrants that it will hold the State harmless and indemnify the State from any liability which may be imposed upon the State as a result of any failure of the Contractor to be in compliance with this Act, as the same applies to performance under this Contract.

7. Connecticut Statutory Labor Requirements

(a) Construction, Alteration or Repair of Public Works Projects; Wage Rates. The Contractor shall comply with Section 31-53 of the Connecticut General Statutes, as revised. The wages paid on an hourly basis to any person performing the work of any mechanic, laborer or worker on the work herein contracted to be done and the amount of payment or contribution paid or payable on behalf of each such person to any employee welfare fund, as defined in subsection (i) of section 31-53 of the Connecticut General Statutes, shall be at a rate equal to the rate customary or prevailing for the same work in the same trade or occupation in the town in which such public works project is being constructed. Any contractor who is not obligated by agreement to make payment or contribution on behalf of such persons to any such employee welfare fund shall pay to each mechanic, laborer or worker as part of such person's wages the amount of payment or contribution for such person's classification on each pay day.

(b) Debarment List. Limitation on Awarding Contracts. The Contractor shall comply with Section 3l-53a of the Connecticut General Statutes, as revised.

(c) Construction Safety and Health Course. The Contractor shall comply with section 31-53b of the Connecticut General Statutes, as revised. The contractor shall furnish proof to the Labor Commissioner with the weekly certified payroll form for the first week each employee begins work on such project that any person performing the work of a mechanic, laborer or worker pursuant to the classifications of labor under section 31-53 of the Connecticut General Statutes, as revised, on such public works project, pursuant to such contract, has completed a course of at least ten hours in duration in construction safety and health approved by the federal Occupational Safety and Health Administration or, has completed a new miner training program approved by the Federal Mine Safety and Health Administration in accordance with 30 CFR 48 or, in the case of telecommunications employees, has completed at least ten hours of training in accordance with 29 CFR 1910.268.

Any employee required to complete a construction safety and health course as required that has not completed the course, shall have a maximum of fourteen (14) days to complete the course. If the employee has not been brought into compliance, they shall be removed from the project until such time as they have completed the required training.

Any costs associated with this notice shall be included in the general cost of the contract. In addition, there shall be no time granted to the contractor for compliance with this notice. The contractor's compliance with this notice and any associated regulations shall not be grounds for claims as outlined in Section 1.11 – "Claims".

(d) Awarding of Contracts to Occupational Safety and Health Law Violators Prohibited. The Contract is subject to Section 31-57b of the Connecticut General Statutes, as revised.

(e) Residents Preference in Work on Other Public Facilities. NOT APPLICABLE TO FEDERAL AID CONTRACTS. Pursuant to Section 31-52a of the Connecticut General Statutes, as revised, in the employment of mechanics, laborers or workmen to perform the work specified herein, preference shall be given to residents of the state who are, and continuously for at least six months prior to the date hereof have been, residents of this state, and if no such person is available, then to residents of other states

8. Tax Liability - Contractor's Exempt Purchase Certificate (CERT – 141)

The Contractor shall comply with Chapter 219 of the Connecticut General Statutes pertaining to tangible personal property or services rendered that is/are subject to sales tax. The Contractor is responsible for determining its tax liability. If the Contractor purchases materials or supplies pursuant to the Connecticut Department of Revenue Services' "Contractor's Exempt Purchase Certificate (CERT-141)," as may be revised, the Contractor acknowledges and agrees that title to such materials and supplies installed or placed in the project will vest in the State simultaneously with passage of title from the retailers or vendors thereof, and the Contractor will have no property rights in the materials and supplies purchased.

Forms and instructions are available anytime by:

Internet: Visit the DRS website at www.ct.gov/DRS to download and print Connecticut tax forms; or

Telephone: Call 1-800-382-9463 (Connecticut calls outside the Greater Hartford calling area only) and select Option 2 or call 860-297-4753 (from anywhere).

9. Executive Orders

This contract is subject to the provisions of Executive Order No. Three of Governor Thomas J. Meskill, promulgated June 16, 1971, concerning labor employment practices, Executive Order No. Seventeen of Governor Thomas J. Meskill, promulgated February 15, 1973, concerning the listing of employment openings and Executive Order No. Sixteen of Governor John G. Rowland promulgated August 4, 1999, concerning violence in the workplace, all of which are incorporated into and are made a part of the contract as if they had been fully set forth in it. The contract may also be subject to Executive Order No. 14 of Governor M. Jodi Rell, promulgated April 17, 2006, concerning procurement of cleaning products and services and to Executive Order No. 49 of Governor Dannel P. Malloy, promulgated May 22, 2015, mandating disclosure of certain gifts to public employees and contributions to certain candidates for office. If Executive Order No. 14 and/or Executive Order No. 49 are applicable, they are deemed to be incorporated into and are made a part of the contract as if they had been fully set forth in it. At the Contractor's request, the Department shall provide a copy of these orders to the Contractor.

10. Non Discrimination Requirement (pursuant to section 4a-60 and 4a-60a of the Connecticut General Statutes, as revised): References to "minority business enterprises" in this Section are not applicable to Federal-aid projects/contracts. Federal-aid projects/contracts are instead subject to the Federal Disadvantaged Business Enterprise Program.

(a) For purposes of this Section, the following terms are defined as follows:

i. "Commission" means the Commission on Human Rights and Opportunities;
ii. "Contract" and "contract" include any extension or modification of the Contract or contract;
iii. "Contractor" and "contractor" include any successors or assigns of the Contractor or contractor;
iv. "gender identity or expression" means a person's gender-related identity, appearance or behavior, whether or not that gender-related identity, appearance or behavior is different from that traditionally associated with the person's physiology or assigned sex at birth, which gender-related identity can be shown by providing evidence including, but not limited to, medical history, care or treatment of the gender-related identity, consistent and uniform assertion of the gender-related identity or any other evidence that the gender-related identity is sincerely held, part of a person's core identity or not being asserted for an improper purpose.
v. "good faith" means that degree of diligence which a reasonable person would exercise in the performance of legal duties and obligations;
vi. "good faith efforts" shall include, but not be limited to, those reasonable initial efforts necessary to comply with statutory or regulatory requirements and additional or substituted efforts when it is determined that such initial efforts will not be sufficient to comply with such requirements;
vii. "marital status" means being single, married as recognized by the State of Connecticut, widowed, separated or divorced;
viii. "mental disability" means one or more mental disorders, as defined in the most recent edition of the American Psychiatric Association's "Diagnostic and Statistical Manual of Mental Disorders", or a record of or regarding a person as having one or more such disorders;

ix. "minority business enterprise" means any small contractor or supplier of materials fifty-one percent or more of the capital stock, if any, or assets of which is owned by a person or persons: (1) who are active in the daily affairs of the enterprise, (2) who have the power to direct the management and policies of the enterprise, and (3) who are members of a minority, as such term is defined in subsection (a) of Connecticut General Statutes § 32-9n; and

x. "public works contract" means any agreement between any individual, firm or corporation and the State or any political subdivision of the State other than a municipality for construction, rehabilitation, conversion, extension, demolition or repair of a public building, highway or other changes or improvements in real property, or which is financed in whole or in part by the State, including, but not limited to, matching expenditures, grants, loans, insurance or guarantees.

For purposes of this Section, the terms "Contract" and "contract" do not include a contract where each contractor is (1) a political subdivision of the State, including, but not limited to, a municipality, (2) a quasi-public agency, as defined in Conn. Gen. Stat. Section 1-120, (3) any other state, including but not limited to any federally recognized Indian tribal governments, as defined in Conn. Gen. Stat. Section 1-267, (4) the federal government, (5) a foreign government, or (6) an agency of a subdivision, agency, state or government described in the immediately preceding enumerated items (1), (2), (3), (4) or (5).

(b) (1) The Contractor agrees and warrants that in the performance of the Contract such Contractor will not discriminate or permit discrimination against any person or group of persons on the grounds of race, color, religious creed, age, marital status, national origin, ancestry, sex, gender identity or expression, intellectual disability, mental disability or physical disability, including, but not limited to, blindness, unless it is shown by such Contractor that such disability prevents performance of the work involved, in any manner prohibited by the laws of the United States or of the State of Connecticut; and the Contractor further agrees to take affirmative action to insure that applicants with job-related qualifications are employed and that employees are treated when employed without regard to their race, color, religious creed, age, marital status, national origin, ancestry, sex, gender identity or expression, intellectual disability, mental disability or physical disability, including, but not limited to, blindness, unless it is shown by the Contractor that such disability prevents performance of the work involved; (2) the Contractor agrees, in all solicitations or advertisements for employees placed by or on behalf of the Contractor, to state that it is an "affirmative action-equal opportunity employer" in accordance with regulations adopted by the Commission; (3) the Contractor agrees to provide each labor union or representative of workers with which the Contractor has a collective bargaining Agreement or other contract or understanding and each vendor with which the Contractor has a contract or understanding, a notice to be provided by the Commission, advising the labor union or workers' representative of the Contractor's commitments under this section and to post copies of the notice in conspicuous places available to employees and applicants for employment; (4) the Contractor agrees to comply with each provision of this Section and Connecticut General Statutes §§ 46a-68e and 46a-68f and with each regulation or relevant order issued by said Commission pursuant to Connecticut General Statutes §§ 46a-56, 46a-68e and 46a-68f; and (5) the Contractor agrees to provide the Commission on Human Rights and Opportunities with such information requested by the Commission, and permit access to pertinent books, records and accounts, concerning the employment practices and procedures of the Contractor as relate to the provisions of this Section and Connecticut General Statutes § 46a-56. If the contract is a public works contract, the Contractor agrees and warrants that he will make good faith efforts to employ minority business enterprises as subcontractors and suppliers of materials on such public works projects.

(c) Determination of the Contractor's good faith efforts shall include, but shall not be limited to, the following factors: The Contractor's employment and subcontracting policies, patterns and practices; affirmative advertising, recruitment and training; technical assistance activities and such other reasonable activities or efforts as the Commission may prescribe that are designed to ensure the participation of minority business enterprises in public works projects.

(d) The Contractor shall develop and maintain adequate documentation, in a manner prescribed by the Commission, of its good faith efforts.

(e) The Contractor shall include the provisions of subsection (b) of this Section in every subcontract or purchase order entered into in order to fulfill any obligation of a contract with the State and such provisions shall be binding on a subcontractor, vendor or manufacturer unless exempted by regulations or orders of the Commission. The Contractor shall take such action with respect to any such subcontract or purchase order as the Commission may direct as a means of enforcing such provisions including sanctions for noncompliance in accordance with Connecticut General Statutes §46a-56; provided if such Contractor becomes involved in, or is threatened with, litigation with a subcontractor or vendor as a result of such direction by the Commission, the Contractor may request the State of Connecticut to enter into any such litigation or negotiation prior thereto to protect the interests of the State and the State may so enter.

(f) The Contractor agrees to comply with the regulations referred to in this Section as they exist on the date of this Contract and as they may be adopted or amended from time to time during the term of this Contract and any amendments thereto.

(g) (1) The Contractor agrees and warrants that in the performance of the Contract such Contractor will not discriminate or permit discrimination against any person or group of persons on the grounds of sexual orientation, in any manner prohibited by the laws of the United States or the State of Connecticut, and that employees are treated when employed without regard to their sexual orientation; (2) the Contractor agrees to provide each labor union or representative of workers with which such Contractor has a collective bargaining Agreement or other contract or understanding and each vendor with which such Contractor has a contract or understanding, a notice to be provided by the Commission on Human Rights and Opportunities advising the labor union or workers' representative of the Contractor's commitments under this section, and to post copies of the notice in conspicuous places available to employees and applicants for employment; (3) the Contractor agrees to comply with each provision of this section and with each regulation or relevant order issued by said Commission pursuant to Connecticut General Statutes § 46a-56; and (4) the Contractor agrees to provide the Commission on Human Rights and Opportunities with such information requested by the Commission, and permit access to pertinent books, records and accounts, concerning the employment practices and procedures of the Contractor which relate to the provisions of this Section and Connecticut General Statutes § 46a-56.

(h) The Contractor shall include the provisions of the foregoing paragraph in every subcontract or purchase order entered into in order to fulfill any obligation of a contract with the State and such provisions shall be binding on a subcontractor, vendor or manufacturer unless exempted by regulations or orders of the Commission. The Contractor shall take such action with respect to any such subcontract or purchase order as the Commission may direct as a means of enforcing such provisions including sanctions for noncompliance in accordance with Connecticut General Statutes § 46a-56; provided, if such Contractor becomes involved in, or is threatened with,

litigation with a subcontractor or vendor as a result of such direction by the Commission, the Contractor may request the State of Connecticut to enter into any such litigation or negotiation prior thereto to protect the interests of the State and the State may so enter."

The Nondiscrimination Certifications can be found at the Office of Policy and Management website.

http://www.ct.gov/opm/cwp/view.asp?a=2982&Q=390928

11. Whistleblower Provision

The following clause is applicable if the Contract has a value of Five Million Dollars ($5,000,000) or more.

Whistleblowing. This Contract may be subject to the provisions of Section 4-61dd of the Connecticut General Statutes. In accordance with this statute, if an officer, employee or appointing authority of the Contractor takes or threatens to take any personnel action against any employee of the Contractor in retaliation for such employee's disclosure of information to any employee of the contracting state or quasi-public agency or the Auditors of Public Accounts or the Attorney General under the provisions of subsection (a) of such statute, the Contractor shall be liable for a civil penalty of not more than five thousand dollars for each offense, up to a maximum of twenty per cent of the value of this Contract. Each violation shall be a separate and distinct offense and in the case of a continuing violation, each calendar day's continuance of the violation shall be deemed to be a separate and distinct offense. The State may request that the Attorney General bring a civil action in the Superior Court for the Judicial District of Hartford to seek imposition and recovery of such civil penalty. In accordance with subsection (f) of such statute, each large state contractor, as defined in the statute, shall post a notice of the provisions of the statute relating to large state contractors in a conspicuous place which is readily available for viewing by the employees of the Contractor.

12. Connecticut Freedom of Information Act

(a) Disclosure of Records. This Contract may be subject to the provisions of section 1-218 of the Connecticut General Statutes. In accordance with this statute, each contract in excess of two million five hundred thousand dollars between a public agency and a person for the performance of a governmental function shall (a) provide that the public agency is entitled to receive a copy of records and files related to the performance of the governmental function, and (b) indicate that such records and files are subject to FOIA and may be disclosed by the public agency pursuant to FOIA. No request to inspect or copy such records or files shall be valid unless the request is made to the public agency in accordance with FOIA. Any complaint by a person who is denied the right to inspect or copy such records or files shall be brought to the Freedom of Information Commission in accordance with the provisions of sections 1-205 and 1-206 of the Connecticut General Statutes.

(b) Confidential Information. The State will afford due regard to the Contractor's request for the protection of proprietary or confidential information which the State receives from the Contractor. However, all materials associated with the Contract are subject to the terms of the FOIA and all corresponding rules, regulations and interpretations. In making such a request, the Contractor may not merely state generally that the materials are proprietary or confidential in nature and not, therefore, subject to release to third parties. Those particular sentences, paragraphs, pages or sections that the Contractor believes are exempt from disclosure under the FOIA must be specifically identified as such. Convincing explanation and rationale sufficient to justify each exemption consistent with the FOIA must accompany the request. The rationale and explanation must be stated in terms of the prospective harm to the competitive position of the Contractor that would result if the identified material were to be released and the reasons why the materials are legally exempt

from release pursuant to the FOIA. To the extent that any other provision or part of the Contract conflicts or is in any way inconsistent with this section, this section controls and shall apply and the conflicting provision or part shall not be given effect. If the Contractor indicates that certain documentation is submitted in confidence, by specifically and clearly marking the documentation as "CONFIDENTIAL," DOT will first review the Contractor's claim for consistency with the FOIA (that is, review that the documentation is actually a trade secret or commercial or financial information and not required by statute), and if determined to be consistent, will endeavor to keep such information confidential to the extent permitted by law. See, *e.g.*, Conn. Gen. Stat. §1-210(b)(5)(A-B). The State, however, has no obligation to initiate, prosecute or defend any legal proceeding or to seek a protective order or other similar relief to prevent disclosure of any information that is sought pursuant to a FOIA request. Should the State withhold such documentation from a Freedom of Information requester and a complaint be brought to the Freedom of Information Commission, the Contractor shall have the burden of cooperating with DOT in defense of that action and in terms of establishing the availability of any FOIA exemption in any proceeding where it is an issue. In no event shall the State have any liability for the disclosure of any documents or information in its possession which the State believes are required to be disclosed pursuant to the FOIA or other law.

13. Service of Process

The Contractor, if not a resident of the State of Connecticut, or, in the case of a partnership, the partners, if not residents, hereby appoints the Secretary of State of the State of Connecticut, and his successors in office, as agent for service of process for any action arising out of or as a result of this Contract; such appointment to be in effect throughout the life of this Contract and six (6) years thereafter.

14. Substitution of Securities for Retainages on State Contracts and Subcontracts

This Contract is subject to the provisions of Section 3-ll2a of the General Statutes of the State of Connecticut, as revised.

15. Health Insurance Portability and Accountability Act of 1996 (HIPAA)

The Contractor shall comply, if applicable, with the Health Insurance Portability and Accountability Act of 1996 and, pursuant thereto, the provisions attached at Exhibit D, and hereby made part of this Contract.

16. Forum and Choice of Law

Forum and Choice of Law. The parties deem the Contract to have been made in the City of Hartford, State of Connecticut. Both parties agree that it is fair and reasonable for the validity and construction of the Contract to be, and it shall be, governed by the laws and court decisions of the State of Connecticut, without giving effect to its principles of conflicts of laws. To the extent that any immunities provided by Federal law or the laws of the State of Connecticut do not bar an action against the State, and to the extent that these courts are courts of competent jurisdiction, for the purpose of venue, the complaint shall be made returnable to the Judicial District of Hartford only or shall be brought in the United States District Court for the District of Connecticut only, and shall not be transferred to any other court, provided, however, that nothing here constitutes a waiver or compromise of the sovereign immunity of the State of Connecticut. The Contractor waives any objection which it may now have or will have to the laying of venue of any Claims in any forum and further irrevocably submits to such jurisdiction in any suit, action or proceeding.

17. Summary of State Ethics Laws

Pursuant to the requirements of section 1-101qq of the Connecticut General Statutes, the summary of State ethics laws developed by the State Ethics Commission pursuant to section 1-81b of the Connecticut General Statutes is incorporated by reference into and made a part of the Contract as if the summary had been fully set forth in the Contract.

18. Audit and Inspection of Plants, Places of Business and Records

(a) The State and its agents, including, but not limited to, the Connecticut Auditors of Public Accounts, Attorney General and State's Attorney and their respective agents, may, at reasonable hours, inspect and examine all of the parts of the Contractor's and Contractor Parties' plants and places of business which, in any way, are related to, or involved in, the performance of this Contract. For the purposes of this Section, "Contractor Parties" means the Contractor's members, directors, officers, shareholders, partners, managers, principal officers, representatives, agents, servants, consultants, employees or any one of them or any other person or entity with whom the Contractor is in privity of oral or written contract and the Contractor intends for such other person or entity to Perform under the Contract in any capacity.

(b) The Contractor shall maintain, and shall require each of the Contractor Parties to maintain, accurate and complete Records. The Contractor shall make all of its and the Contractor Parties' Records available at all reasonable hours for audit and inspection by the State and its agents.

(c) The State shall make all requests for any audit or inspection in writing and shall provide the Contractor with at least twenty-four (24) hours' notice prior to the requested audit and inspection date. If the State suspects fraud or other abuse, or in the event of an emergency, the State is not obligated to provide any prior notice.

(d) The Contractor shall keep and preserve or cause to be kept and preserved all of its and Contractor Parties' Records until three (3) years after the latter of (i) final payment under this Agreement, or (ii) the expiration or earlier termination of this Agreement, as the same may be modified for any reason. The State may request an audit or inspection at any time during this period. If any Claim or audit is started before the expiration of this period, the Contractor shall retain or cause to be retained all Records until all Claims or audit findings have been resolved.

(e) The Contractor shall cooperate fully with the State and its agents in connection with an audit or inspection. Following any audit or inspection, the State may conduct and the Contractor shall cooperate with an exit conference.

(f) The Contractor shall incorporate this entire Section verbatim into any contract or other agreement that it enters into with any Contractor Party.

19.Campaign Contribution Restriction

For all State contracts, defined in Conn. Gen. Stat. §9-612(f)(1) as having a value in a calendar year of $50,000 or more, or a combination or series of such agreements or contracts having a value of $100,000 or more, the authorized signatory to this contract expressly acknowledges receipt of the State Elections Enforcement Commission's notice advising state contractors of state campaign contribution and solicitation prohibitions, and will inform its principals of the contents of the notice, as set forth in "Notice to Executive Branch State Contractors and Prospective State Contractors of Campaign Contribution and Solicitation Limitations," a copy of which is attached hereto and hereby made a part of this contract, attached as Exhibit E.

20. Tangible Personal Property

(a) The Contractor on its behalf and on behalf of its Affiliates, as defined below, shall comply with the provisions of Conn. Gen. Stat. §12-411b, as follows:

(1) For the term of the Contract, the Contractor and its Affiliates shall collect and remit to the State of Connecticut, Department of Revenue Services, any Connecticut use tax due under the provisions of Chapter 219 of the Connecticut General Statutes for items of tangible personal property sold by the Contractor or by any of its Affiliates in the same manner as if the Contractor and such Affiliates were engaged in the business of selling tangible personal property for use in Connecticut and had sufficient nexus under the provisions of Chapter 219 to be required to collect Connecticut use tax;
(2) A customer's payment of a use tax to the Contractor or its Affiliates relieves the customer of liability for the use tax;
(3) The Contractor and its Affiliates shall remit all use taxes they collect from customers on or before the due date specified in the Contract, which may not be later than the last day of the month next succeeding the end of a calendar quarter or other tax collection period during which the tax was collected;
(4) The Contractor and its Affiliates are not liable for use tax billed by them but not paid to them by a customer; and
(5) Any Contractor or Affiliate who fails to remit use taxes collected on behalf of its customers by the due date specified in the Contract shall be subject to the interest and penalties provided for persons required to collect sales tax under chapter 219 of the general statutes.

(b) For purposes of this section of the Contract, the word "Affiliate" means any person, as defined in section 12-1 of the general statutes, that controls, is controlled by, or is under common control with another person. A person controls another person if the person owns, directly or indirectly, more than ten per cent of the voting securities of the other person. The word "voting security" means a security that confers upon the holder the right to vote for the election of members of the board of directors or similar governing body of the business, or that is convertible into, or entitles the holder to receive, upon its exercise, a security that confers such a right to vote. "Voting security" includes a general partnership interest.

(c) The Contractor represents and warrants that each of its Affiliates has vested in the Contractor plenary authority to so bind the Affiliates in any agreement with the State of Connecticut. The Contractor on its own behalf and on behalf of its Affiliates shall also provide, no later than 30 days after receiving a request by the State's contracting authority, such information as the State may require to ensure, in the State's sole determination, compliance with the provisions of Chapter 219 of the Connecticut General Statutes, including, but not limited to, §12-411b.

21. Bid Rigging and/or Fraud – Notice to Contractor

The Connecticut Department of Transportation is cooperating with the U.S. Department of Transportation and the Justice Department in their investigation into highway construction contract bid rigging and/or fraud.

A toll-free "HOT LINE" telephone number 800-424-9071 has been established to receive information from contractors, subcontractors, manufacturers, suppliers or anyone with knowledge of bid rigging and/or fraud, either past or current. The "HOT LINE" telephone number will be available during normal working hours (8:00 am – 5:00 pm EST). Information will be treated confidentially and anonymity respected.

22. Consulting Agreement Affidavit

The Contractor shall comply with Connecticut General Statutes Section 4a-81(a) and 4a-81(b), as revised. Pursuant to Public Act 11-229, after the initial submission of the form, if there is a change in the information contained in the form, a contractor shall submit the updated form, as applicable, either (i) not later than thirty (30) days after the effective date of such change or (ii) prior to execution of any new contract, whichever is earlier.

The Affidavit/Form may be submitted in written format or electronic format through the Department of Administrative Services (DAS) website.

23. Cargo Preference Act Requirements (46 CFR 381.7(a)-(b)) – Use of United States Flag Vessels

The Contractor agrees to comply with the following:

(a) ***Agreement Clauses***.

(1) Pursuant to Pub. L. 664 (43 U.S.C. 1241(b)) at least 50 percent of any equipment, materials or commodities procured, contracted for or otherwise obtained with funds granted, guaranteed, loaned, or advanced by the U.S. Government under this agreement, and which may be transported by ocean vessel, shall be transported on privately owned United States-flag commercial vessels, if available.

(2) Within 20 days following the date of loading for shipments originating within the United States or within 30 working days following the date of loading for shipments originating outside the United States, a legible copy of a rated, 'on-board' commercial ocean bill-of-lading in English for each shipment of cargo described in paragraph (a)(1) of this section shall be furnished to both the Contracting Officer (through the prime contractor in the case of subcontractor bills-of-lading) and to the Division of National Cargo, Office of Market Development, Maritime Administration, Washington, DC 20590.

(b) ***Contractor and Subcontractor Clauses.*** The contractor agrees—

(1) To utilize privately owned United States-flag commercial vessels to ship at least 50 percent of the gross tonnage (computed separately for dry bulk carriers, dry cargo liners, and tankers) involved, whenever shipping any equipment, material, or commodities pursuant to this contract, to the extent such vessels are available at fair and reasonable rates for United States-flag commercial vessels.

(2) To furnish within 20 days following the date of loading for shipments originating within the United States or within 30 working days following the date of loading for shipments originating outside the United States, a legible copy of a rated, 'on-board' commercial ocean bill-of-lading in English for each shipment of cargo described in paragraph (b) (1) of this section to both the Contracting Officer (through the prime contractor in the case of subcontractor bills-of-lading) and to the Division of National Cargo, Office of Market Development, Maritime Administration, Washington, DC 20590.

(3) To insert the substance of the provisions of this clause in all subcontracts issued pursuant to this contract.

EXHIBIT A

FHWA-1273 -- Revised May 1, 2012

REQUIRED CONTRACT PROVISIONS

FEDERAL-AID CONSTRUCTION CONTRACTS

I. General
II. Nondiscrimination
III. Nonsegregated Facilities
IV. Davis-Bacon and Related Act Provisions
V. Contract Work Hours and Safety Standards Act Provisions
VI. Subletting or Assigning the Contract
VII. Safety: Accident Prevention
VIII. False Statements Concerning Highway Projects
IX. Implementation of Clean Air Act and Federal Water Pollution Control Act
X. Compliance with Governmentwide Suspension and Debarment Requirements
XI. Certification Regarding Use of Contract Funds for Lobbying

ATTACHMENTS

A. Employment and Materials Preference for Appalachian Development Highway System or Appalachian Local Access Road Contracts (included in Appalachian contracts only)

I. GENERAL

1. Form FHWA-1273 must be physically incorporated in each construction contract funded under Title 23 (excluding emergency contracts solely intended for debris removal). The contractor (or subcontractor) must insert this form in each subcontract and further require its inclusion in all lower tier subcontracts (excluding purchase orders, rental agreements and other agreements for supplies or services).

The applicable requirements of Form FHWA-1273 are incorporated by reference for work done under any purchase order, rental agreement or agreement for other services. The prime contractor shall be responsible for compliance by any subcontractor, lower-tier subcontractor or service provider.

Form FHWA-1273 must be included in all Federal-aid design-build contracts, in all subcontracts and in lower tier subcontracts (excluding subcontracts for design services, purchase orders, rental agreements and other agreements for supplies or services). The design-builder shall be responsible for compliance by any subcontractor, lower-tier subcontractor or service provider.

Contracting agencies may reference Form FHWA-1273 in bid proposal or request for proposal documents, however, the Form FHWA-1273 must be physically incorporated (not referenced) in all contracts, subcontracts and lower-tier subcontracts (excluding purchase orders, rental agreements and other agreements for supplies or services related to a construction contract).

2. Subject to the applicability criteria noted in the following sections, these contract provisions shall apply to all work performed on the contract by the contractor's own organization and with the

assistance of workers under the contractor's immediate superintendence and to all work performed on the contract by piecework, station work, or by subcontract.

3. A breach of any of the stipulations contained in these Required Contract Provisions may be sufficient grounds for withholding of progress payments, withholding of final payment, termination of the contract, suspension / debarment or any other action determined to be appropriate by the contracting agency and FHWA.

4. Selection of Labor: During the performance of this contract, the contractor shall not use convict labor for any purpose within the limits of a construction project on a Federal-aid highway unless it is labor performed by convicts who are on parole, supervised release, or probation. The term Federal-aid highway does not include roadways functionally classified as local roads or rural minor collectors.

II. NONDISCRIMINATION

The provisions of this section related to 23 CFR Part 230 are applicable to all Federal-aid construction contracts and to all related construction subcontracts of $10,000 or more. The provisions of 23 CFR Part 230 are not applicable to material supply, engineering, or architectural service contracts.

In addition, the contractor and all subcontractors must comply with the following policies: Executive Order 11246, 41 CFR 60, 29 CFR 1625-1627, Title 23 USC Section 140, the Rehabilitation Act of 1973, as amended (29 USC 794), Title VI of the Civil Rights Act of 1964, as amended, and related regulations including 49 CFR Parts 21, 26 and 27; and 23 CFR Parts 200, 230, and 633.

The contractor and all subcontractors must comply with: the requirements of the Equal Opportunity Clause in 41 CFR 60-1.4(b) and, for all construction contracts exceeding $10,000, the Standard Federal Equal Employment Opportunity Construction Contract Specifications in 41 CFR 60-4.3.

Note: The U.S. Department of Labor has exclusive authority to determine compliance with Executive Order 11246 and the policies of the Secretary of Labor including 41 CFR 60, and 29 CFR 1625-1627. The contracting agency and the FHWA have the authority and the responsibility to ensure compliance with Title 23 USC Section 140, the Rehabilitation Act of 1973, as amended (29 USC 794), and Title VI of the Civil Rights Act of 1964, as amended, and related regulations including 49 CFR Parts 21, 26 and 27; and 23 CFR Parts 200, 230, and 633.

The following provision is adopted from 23 CFR 230, Appendix A, with appropriate revisions to conform to the U.S. Department of Labor (US DOL) and FHWA requirements.

1. Equal Employment Opportunity: Equal employment opportunity (EEO) requirements not to discriminate and to take affirmative action to assure equal opportunity as set forth under laws, executive orders, rules, regulations (28 CFR 35, 29 CFR 1630, 29 CFR 1625-1627, 41 CFR 60 and 49 CFR 27) and orders of the Secretary of Labor as modified by the provisions prescribed herein, and imposed pursuant to 23 U.S.C. 140 shall constitute the EEO and specific affirmative action standards for the contractor's project activities under this contract. The provisions of the Americans with Disabilities Act of 1990 (42 U.S.C. 12101 et seq.) set forth under 28 CFR 35 and 29 CFR 1630 are incorporated by reference in this contract. In the execution of this contract, the contractor agrees to comply with the following minimum specific requirement activities of EEO:

a. The contractor will work with the contracting agency and the Federal Government to ensure that it has made every good faith effort to provide equal opportunity with respect to all of its terms and conditions of employment and in their review of activities under the contract.

b. The contractor will accept as its operating policy the following statement:

"It is the policy of this Company to assure that applicants are employed, and that employees are treated during employment, without regard to their race, religion, sex, color, national origin, age or disability. Such action shall include: employment, upgrading, demotion, or transfer; recruitment or recruitment advertising; layoff or termination; rates of pay or other forms of compensation; and selection for training, including apprenticeship, pre-apprenticeship, and/or on-the-job training."

2. EEO Officer: The contractor will designate and make known to the contracting officers an EEO Officer who will have the responsibility for and must be capable of effectively administering and promoting an active EEO program and who must be assigned adequate authority and responsibility to do so.

3. Dissemination of Policy: All members of the contractor's staff who are authorized to hire, supervise, promote, and discharge employees, or who recommend such action, or who are substantially involved in such action, will be made fully cognizant of, and will implement, the contractor's EEO policy and contractual responsibilities to provide EEO in each grade and classification of employment. To ensure that the above agreement will be met, the following actions will be taken as a minimum:

a. Periodic meetings of supervisory and personnel office employees will be conducted before the start of work and then not less often than once every six months, at which time the contractor's EEO policy and its implementation will be reviewed and explained. The meetings will be conducted by the EEO Officer.

b. All new supervisory or personnel office employees will be given a thorough indoctrination by the EEO Officer, covering all major aspects of the contractor's EEO obligations within thirty days following their reporting for duty with the contractor.

c. All personnel who are engaged in direct recruitment for the project will be instructed by the EEO Officer in the contractor's procedures for locating and hiring minorities and women.

d. Notices and posters setting forth the contractor's EEO policy will be placed in areas readily accessible to employees, applicants for employment and potential employees.

e. The contractor's EEO policy and the procedures to implement such policy will be brought to the attention of employees by means of meetings, employee handbooks, or other appropriate means.

4. Recruitment: When advertising for employees, the contractor will include in all advertisements for employees the notation: "An Equal Opportunity Employer." All such advertisements will be placed in publications having a large circulation among minorities and women in the area from which the project work force would normally be derived.

a. The contractor will, unless precluded by a valid bargaining agreement, conduct systematic and direct recruitment through public and private employee referral sources likely to yield qualified minorities and women. To meet this requirement, the contractor will identify sources of potential

minority group employees, and establish with such identified sources procedures whereby minority and women applicants may be referred to the contractor for employment consideration.

b. In the event the contractor has a valid bargaining agreement providing for exclusive hiring hall referrals, the contractor is expected to observe the provisions of that agreement to the extent that the system meets the contractor's compliance with EEO contract provisions. Where implementation of such an agreement has the effect of discriminating against minorities or women, or obligates the contractor to do the same, such implementation violates Federal nondiscrimination provisions.

c. The contractor will encourage its present employees to refer minorities and women as applicants for employment. Information and procedures with regard to referring such applicants will be discussed with employees.

5. Personnel Actions: Wages, working conditions, and employee benefits shall be established and administered, and personnel actions of every type, including hiring, upgrading, promotion, transfer, demotion, layoff, and termination, shall be taken without regard to race, color, religion, sex, national origin, age or disability. The following procedures shall be followed:

a. The contractor will conduct periodic inspections of project sites to insure that working conditions and employee facilities do not indicate discriminatory treatment of project site personnel.

b. The contractor will periodically evaluate the spread of wages paid within each classification to determine any evidence of discriminatory wage practices.

c. The contractor will periodically review selected personnel actions in depth to determine whether there is evidence of discrimination. Where evidence is found, the contractor will promptly take corrective action. If the review indicates that the discrimination may extend beyond the actions reviewed, such corrective action shall include all affected persons.

d. The contractor will promptly investigate all complaints of alleged discrimination made to the contractor in connection with its obligations under this contract, will attempt to resolve such complaints, and will take appropriate corrective action within a reasonable time. If the investigation indicates that the discrimination may affect persons other than the complainant, such corrective action shall include such other persons. Upon completion of each investigation, the contractor will inform every complainant of all of their avenues of appeal.

6. Training and Promotion:

a. The contractor will assist in locating, qualifying, and increasing the skills of minorities and women who are applicants for employment or current employees. Such efforts should be aimed at developing full journey level status employees in the type of trade or job classification involved.

b. Consistent with the contractor's work force requirements and as permissible under Federal and State regulations, the contractor shall make full use of training programs, i.e., apprenticeship, and on-the-job training programs for the geographical area of contract performance. In the event a special provision for training is provided under this contract, this subparagraph will be superseded as indicated in the special provision. The contracting agency may reserve training positions for persons who receive welfare assistance in accordance with 23 U.S.C. 140(a).

c. The contractor will advise employees and applicants for employment of available training programs and entrance requirements for each.

d. The contractor will periodically review the training and promotion potential of employees who are minorities and women and will encourage eligible employees to apply for such training and promotion.

7. Unions: If the contractor relies in whole or in part upon unions as a source of employees, the contractor will use good faith efforts to obtain the cooperation of such unions to increase opportunities for minorities and women. Actions by the contractor, either directly or through a contractor's association acting as agent, will include the procedures set forth below:

a. The contractor will use good faith efforts to develop, in cooperation with the unions, joint training programs aimed toward qualifying more minorities and women for membership in the unions and increasing the skills of minorities and women so that they may qualify for higher paying employment.

b. The contractor will use good faith efforts to incorporate an EEO clause into each union agreement to the end that such union will be contractually bound to refer applicants without regard to their race, color, religion, sex, national origin, age or disability.

c. The contractor is to obtain information as to the referral practices and policies of the labor union except that to the extent such information is within the exclusive possession of the labor union and such labor union refuses to furnish such information to the contractor, the contractor shall so certify to the contracting agency and shall set forth what efforts have been made to obtain such information.

d. In the event the union is unable to provide the contractor with a reasonable flow of referrals within the time limit set forth in the collective bargaining agreement, the contractor will, through independent recruitment efforts, fill the employment vacancies without regard to race, color, religion, sex, national origin, age or disability; making full efforts to obtain qualified and/or qualifiable minorities and women. The failure of a union to provide sufficient referrals (even though it is obligated to provide exclusive referrals under the terms of a collective bargaining agreement) does not relieve the contractor from the requirements of this paragraph. In the event the union referral practice prevents the contractor from meeting the obligations pursuant to Executive Order 11246, as amended, and these special provisions, such contractor shall immediately notify the contracting agency.

8. Reasonable Accommodation for Applicants / Employees with Disabilities: The contractor must be familiar with the requirements for and comply with the Americans with Disabilities Act and all rules and regulations established there under. Employers must provide reasonable accommodation in all employment activities unless to do so would cause an undue hardship.

9. Selection of Subcontractors, Procurement of Materials and Leasing of Equipment: The contractor shall not discriminate on the grounds of race, color, religion, sex, national origin, age or disability in the selection and retention of subcontractors, including procurement of materials and leases of equipment. The contractor shall take all necessary and reasonable steps to ensure nondiscrimination in the administration of this contract.

a. The contractor shall notify all potential subcontractors and suppliers and lessors of their EEO obligations under this contract.

b. The contractor will use good faith efforts to ensure subcontractor compliance with their EEO obligations.

10. Assurance Required by 49 CFR 26.13(b):

a. The requirements of 49 CFR Part 26, and the State DOT's U.S. DOT-approved DBE program are incorporated by reference.

b. The contractor or subcontractor shall not discriminate on the basis of race, color, national origin, or sex in the performance of this contract. The contractor shall carry out applicable requirements of 49 CFR Part 26, in the award and administration of DOT-assisted contracts. Failure by the contractor to carry out these requirements is a material breach of this contract, which may result in the termination of this contract or such other remedy as the contracting agency deems appropriate.

11. Records and Reports: The contractor shall keep such records as necessary to document compliance with the EEO requirements. Such records shall be retained for a period of three years following the date of the final payment to the contractor for all contract work and shall be available at reasonable times and places for inspection by authorized representatives of the contracting agency and the FHWA.

a. The records kept by the contractor shall document the following:

(1) The number and work hours of minority and non-minority group members and women employed in each work classification on the project;

(2) The progress and efforts being made in cooperation with unions, when applicable, to increase employment opportunities for minorities and women; and

(3) The progress and efforts being made in locating, hiring, training, qualifying, and upgrading minorities and women;

b. The contractors and subcontractors will submit an annual report to the contracting agency each July for the duration of the project, indicating the number of minority, women, and non-minority group employees currently engaged in each work classification required by the contract work. This information is to be reported on Form FHWA-1391. The staffing data should represent the project work force on board in all or any part of the last payroll period preceding the end of July. If on-the-job training is being required by special provision, the contractor will be required to collect and report training data. The employment data should reflect the work force on board during all or any part of the last payroll period preceding the end of July.

III. NONSEGREGATED FACILITIES

This provision is applicable to all Federal-aid construction contracts and to all related construction subcontracts of $10,000 or more.

The contractor must ensure that facilities provided for employees are provided in such a manner that segregation on the basis of race, color, religion, sex, or national origin cannot result. The contractor may neither require such segregated use by written or oral policies nor tolerate such use by employee custom. The contractor's obligation extends further to ensure that its employees are not assigned to perform their services at any location, under the contractor's control, where the facilities are segregated. The term "facilities" includes waiting rooms, work areas, restaurants and other eating

areas, time clocks, restrooms, washrooms, locker rooms, and other storage or dressing areas, parking lots, drinking fountains, recreation or entertainment areas, transportation, and housing provided for employees. The contractor shall provide separate or single-user restrooms and necessary dressing or sleeping areas to assure privacy between sexes.

IV. DAVIS-BACON AND RELATED ACT PROVISIONS

This section is applicable to all Federal-aid construction projects exceeding $2,000 and to all related subcontracts and lower-tier subcontracts (regardless of subcontract size). The requirements apply to all projects located within the right-of-way of a roadway that is functionally classified as Federal-aid highway. This excludes roadways functionally classified as local roads or rural minor collectors, which are exempt. Contracting agencies may elect to apply these requirements to other projects.

The following provisions are from the U.S. Department of Labor regulations in 29 CFR 5.5 “Contract provisions and related matters” with minor revisions to conform to the FHWA-1273 format and FHWA program requirements.

1. Minimum wages

a. All laborers and mechanics employed or working upon the site of the work, will be paid unconditionally and not less often than once a week, and without subsequent deduction or rebate on any account (except such payroll deductions as are permitted by regulations issued by the Secretary of Labor under the Copeland Act (29 CFR part 3)), the full amount of wages and bona fide fringe benefits (or cash equivalents thereof) due at time of payment computed at rates not less than those contained in the wage determination of the Secretary of Labor which is attached hereto and made a part hereof, regardless of any contractual relationship which may be alleged to exist between the contractor and such laborers and mechanics.

Contributions made or costs reasonably anticipated for bona fide fringe benefits under section 1(b)(2) of the Davis-Bacon Act on behalf of laborers or mechanics are considered wages paid to such laborers or mechanics, subject to the provisions of paragraph 1.d. of this section; also, regular contributions made or costs incurred for more than a weekly period (but not less often than quarterly) under plans, funds, or programs which cover the particular weekly period, are deemed to be constructively made or incurred during such weekly period. Such laborers and mechanics shall be paid the appropriate wage rate and fringe benefits on the wage determination for the classification of work actually performed, without regard to skill, except as provided in 29 CFR 5.5(a)(4). Laborers or mechanics performing work in more than one classification may be compensated at the rate specified for each classification for the time actually worked therein: Provided, That the employer's payroll records accurately set forth the time spent in each classification in which work is performed. The wage determination (including any additional classification and wage rates conformed under paragraph 1.b. of this section) and the Davis-Bacon poster (WH–1321) shall be posted at all times by the contractor and its subcontractors at the site of the work in a prominent and accessible place where it can be easily seen by the workers.

b. (1) The contracting officer shall require that any class of laborers or mechanics, including helpers, which is not listed in the wage determination and which is to be employed under the contract shall be classified in conformance with the wage determination. The contracting officer shall approve an additional classification and wage rate and fringe benefits therefore only when the following criteria have been met:

(i) The work to be performed by the classification requested is not performed by a classification in the wage determination; and

(ii) The classification is utilized in the area by the construction industry; and

(iii) The proposed wage rate, including any bona fide fringe benefits, bears a reasonable relationship to the wage rates contained in the wage determination.

(2) If the contractor and the laborers and mechanics to be employed in the classification (if known), or their representatives, and the contracting officer agree on the classification and wage rate (including the amount designated for fringe benefits where appropriate), a report of the action taken shall be sent by the contracting officer to the Administrator of the Wage and Hour Division, Employment Standards Administration, U.S. Department of Labor, Washington, DC 20210. The Administrator, or an authorized representative, will approve, modify, or disapprove every additional classification action within 30 days of receipt and so advise the contracting officer or will notify the contracting officer within the 30-day period that additional time is necessary.

(3) In the event the contractor, the laborers or mechanics to be employed in the classification or their representatives, and the contracting officer do not agree on the proposed classification and wage rate (including the amount designated for fringe benefits, where appropriate), the contracting officer shall refer the questions, including the views of all interested parties and the recommendation of the contracting officer, to the Wage and Hour Administrator for determination. The Wage and Hour Administrator, or an authorized representative, will issue a determination within 30 days of receipt and so advise the contracting officer or will notify the contracting officer within the 30-day period that additional time is necessary.

(4) The wage rate (including fringe benefits where appropriate) determined pursuant to paragraphs 1.b.(2) or 1.b.(3) of this section, shall be paid to all workers performing work in the classification under this contract from the first day on which work is performed in the classification.

c. Whenever the minimum wage rate prescribed in the contract for a class of laborers or mechanics includes a fringe benefit which is not expressed as an hourly rate, the contractor shall either pay the benefit as stated in the wage determination or shall pay another bona fide fringe benefit or an hourly cash equivalent thereof.

d. If the contractor does not make payments to a trustee or other third person, the contractor may consider as part of the wages of any laborer or mechanic the amount of any costs reasonably anticipated in providing bona fide fringe benefits under a plan or program, Provided, That the Secretary of Labor has found, upon the written request of the contractor, that the applicable standards of the Davis-Bacon Act have been met. The Secretary of Labor may require the contractor to set aside in a separate account assets for the meeting of obligations under the plan or program.

2. Withholding

The contracting agency shall upon its own action or upon written request of an authorized representative of the Department of Labor, withhold or cause to be withheld from the contractor under this contract, or any other Federal contract with the same prime contractor, or any other federally-assisted contract subject to Davis-Bacon prevailing wage requirements, which is held by the same prime contractor, so much of the accrued payments or advances as may be considered necessary to pay laborers and mechanics, including apprentices, trainees, and helpers, employed by the contractor or

any subcontractor the full amount of wages required by the contract. In the event of failure to pay any laborer or mechanic, including any apprentice, trainee, or helper, employed or working on the site of the work, all or part of the wages required by the contract, the contracting agency may, after written notice to the contractor, take such action as may be necessary to cause the suspension of any further payment, advance, or guarantee of funds until such violations have ceased.

3. Payrolls and basic records

a. Payrolls and basic records relating thereto shall be maintained by the contractor during the course of the work and preserved for a period of three years thereafter for all laborers and mechanics working at the site of the work. Such records shall contain the name, address, and social security number of each such worker, his or her correct classification, hourly rates of wages paid (including rates of contributions or costs anticipated for bona fide fringe benefits or cash equivalents thereof of the types described in section 1(b)(2)(B) of the Davis-Bacon Act), daily and weekly number of hours worked, deductions made and actual wages paid. Whenever the Secretary of Labor has found under 29 CFR 5.5(a)(1)(iv) that the wages of any laborer or mechanic include the amount of any costs reasonably anticipated in providing benefits under a plan or program described in section 1(b)(2)(B) of the Davis-Bacon Act, the contractor shall maintain records which show that the commitment to provide such benefits is enforceable, that the plan or program is financially responsible, and that the plan or program has been communicated in writing to the laborers or mechanics affected, and records which show the costs anticipated or the actual cost incurred in providing such benefits. Contractors employing apprentices or trainees under approved programs shall maintain written evidence of the registration of apprenticeship programs and certification of trainee programs, the registration of the apprentices and trainees, and the ratios and wage rates prescribed in the applicable programs.

b. (1) The contractor shall submit weekly for each week in which any contract work is performed a copy of all payrolls to the contracting agency. The payrolls submitted shall set out accurately and completely all of the information required to be maintained under 29 CFR 5.5(a)(3)(i), except that full social security numbers and home addresses shall not be included on weekly transmittals. Instead the payrolls shall only need to include an individually identifying number for each employee (e.g. , the last four digits of the employee's social security number). The required weekly payroll information may be submitted in any form desired. Optional Form WH–347 is available for this purpose from the Wage and Hour Division Web site at http://www.dol.gov/esa/whd/forms/wh347instr.htm or its successor site. The prime contractor is responsible for the submission of copies of payrolls by all subcontractors. Contractors and subcontractors shall maintain the full social security number and current address of each covered worker, and shall provide them upon request to the contracting agency for transmission to the State DOT, the FHWA or the Wage and Hour Division of the Department of Labor for purposes of an investigation or audit of compliance with prevailing wage requirements. It is not a violation of this section for a prime contractor to require a subcontractor to provide addresses and social security numbers to the prime contractor for its own records, without weekly submission to the contracting agency..

(2) Each payroll submitted shall be accompanied by a “Statement of Compliance,” signed by the contractor or subcontractor or his or her agent who pays or supervises the payment of the persons employed under the contract and shall certify the following:

(i) That the payroll for the payroll period contains the information required to be provided under §5.5 (a)(3)(ii) of Regulations, 29 CFR part 5, the appropriate information is being maintained under §5.5 (a)(3)(i) of Regulations, 29 CFR part 5, and that such information is correct and complete;

(ii) That each laborer or mechanic (including each helper, apprentice, and trainee) employed on the contract during the payroll period has been paid the full weekly wages earned, without rebate, either directly or indirectly, and that no deductions have been made either directly or indirectly from the full wages earned, other than permissible deductions as set forth in Regulations, 29 CFR part 3;

(iii) That each laborer or mechanic has been paid not less than the applicable wage rates and fringe benefits or cash equivalents for the classification of work performed, as specified in the applicable wage determination incorporated into the contract.

(3) The weekly submission of a properly executed certification set forth on the reverse side of Optional Form WH–347 shall satisfy the requirement for submission of the "Statement of Compliance" required by paragraph 3.b.(2) of this section.

(4) The falsification of any of the above certifications may subject the contractor or subcontractor to civil or criminal prosecution under section 1001 of title 18 and section 231 of title 31 of the United States Code.

c. The contractor or subcontractor shall make the records required under paragraph 3.a. of this section available for inspection, copying, or transcription by authorized representatives of the contracting agency, the State DOT, the FHWA, or the Department of Labor, and shall permit such representatives to interview employees during working hours on the job. If the contractor or subcontractor fails to submit the required records or to make them available, the FHWA may, after written notice to the contractor, the contracting agency or the State DOT, take such action as may be necessary to cause the suspension of any further payment, advance, or guarantee of funds. Furthermore, failure to submit the required records upon request or to make such records available may be grounds for debarment action pursuant to 29 CFR 5.12.

4. Apprentices and trainees

a. Apprentices (programs of the USDOL).

Apprentices will be permitted to work at less than the predetermined rate for the work they performed when they are employed pursuant to and individually registered in a bona fide apprenticeship program registered with the U.S. Department of Labor, Employment and Training Administration, Office of Apprenticeship Training, Employer and Labor Services, or with a State Apprenticeship Agency recognized by the Office, or if a person is employed in his or her first 90 days of probationary employment as an apprentice in such an apprenticeship program, who is not individually registered in the program, but who has been certified by the Office of Apprenticeship Training, Employer and Labor Services or a State Apprenticeship Agency (where appropriate) to be eligible for probationary employment as an apprentice.

The allowable ratio of apprentices to journeymen on the job site in any craft classification shall not be greater than the ratio permitted to the contractor as to the entire work force under the registered program. Any worker listed on a payroll at an apprentice wage rate, who is not registered or otherwise employed as stated above, shall be paid not less than the applicable wage rate on the wage determination for the classification of work actually performed. In addition, any apprentice performing work on the job site in excess of the ratio permitted under the registered program shall be paid not less than the applicable wage rate on the wage determination for the work actually performed. Where a contractor is performing construction on a project in a locality other than that in which its program is

registered, the ratios and wage rates (expressed in percentages of the journeyman's hourly rate) specified in the contractor's or subcontractor's registered program shall be observed.

Every apprentice must be paid at not less than the rate specified in the registered program for the apprentice's level of progress, expressed as a percentage of the journeymen hourly rate specified in the applicable wage determination. Apprentices shall be paid fringe benefits in accordance with the provisions of the apprenticeship program. If the apprenticeship program does not specify fringe benefits, apprentices must be paid the full amount of fringe benefits listed on the wage determination for the applicable classification. If the Administrator determines that a different practice prevails for the applicable apprentice classification, fringes shall be paid in accordance with that determination.

In the event the Office of Apprenticeship Training, Employer and Labor Services, or a State Apprenticeship Agency recognized by the Office, withdraws approval of an apprenticeship program, the contractor will no longer be permitted to utilize apprentices at less than the applicable predetermined rate for the work performed until an acceptable program is approved.

b. Trainees (programs of the USDOL).

Except as provided in 29 CFR 5.16, trainees will not be permitted to work at less than the predetermined rate for the work performed unless they are employed pursuant to and individually registered in a program which has received prior approval, evidenced by formal certification by the U.S. Department of Labor, Employment and Training Administration.

The ratio of trainees to journeymen on the job site shall not be greater than permitted under the plan approved by the Employment and Training Administration.

Every trainee must be paid at not less than the rate specified in the approved program for the trainee's level of progress, expressed as a percentage of the journeyman hourly rate specified in the applicable wage determination. Trainees shall be paid fringe benefits in accordance with the provisions of the trainee program. If the trainee program does not mention fringe benefits, trainees shall be paid the full amount of fringe benefits listed on the wage determination unless the Administrator of the Wage and Hour Division determines that there is an apprenticeship program associated with the corresponding journeyman wage rate on the wage determination which provides for less than full fringe benefits for apprentices. Any employee listed on the payroll at a trainee rate who is not registered and participating in a training plan approved by the Employment and Training Administration shall be paid not less than the applicable wage rate on the wage determination for the classification of work actually performed. In addition, any trainee performing work on the job site in excess of the ratio permitted under the registered program shall be paid not less than the applicable wage rate on the wage determination for the work actually performed.

In the event the Employment and Training Administration withdraws approval of a training program, the contractor will no longer be permitted to utilize trainees at less than the applicable predetermined rate for the work performed until an acceptable program is approved.

c. Equal employment opportunity. The utilization of apprentices, trainees and journeymen under this part shall be in conformity with the equal employment opportunity requirements of Executive Order 11246, as amended, and 29 CFR part 30.

d. Apprentices and Trainees (programs of the U.S. DOT).

Apprentices and trainees working under apprenticeship and skill training programs which have been certified by the Secretary of Transportation as promoting EEO in connection with Federal-aid highway construction programs are not subject to the requirements of paragraph 4 of this Section IV. The straight time hourly wage rates for apprentices and trainees under such programs will be established by the particular programs. The ratio of apprentices and trainees to journeymen shall not be greater than permitted by the terms of the particular program.

5. Compliance with Copeland Act requirements. The contractor shall comply with the requirements of 29 CFR part 3, which are incorporated by reference in this contract.

6. Subcontracts. The contractor or subcontractor shall insert Form FHWA-1273 in any subcontracts and also require the subcontractors to include Form FHWA-1273 in any lower tier subcontracts. The prime contractor shall be responsible for the compliance by any subcontractor or lower tier subcontractor with all the contract clauses in 29 CFR 5.5.

7. Contract termination: debarment. A breach of the contract clauses in 29 CFR 5.5 may be grounds for termination of the contract, and for debarment as a contractor and a subcontractor as provided in 29 CFR 5.12.

8. Compliance with Davis-Bacon and Related Act requirements. All rulings and interpretations of the Davis-Bacon and Related Acts contained in 29 CFR parts 1, 3, and 5 are herein incorporated by reference in this contract.

9. Disputes concerning labor standards. Disputes arising out of the labor standards provisions of this contract shall not be subject to the general disputes clause of this contract. Such disputes shall be resolved in accordance with the procedures of the Department of Labor set forth in 29 CFR parts 5, 6, and 7. Disputes within the meaning of this clause include disputes between the contractor (or any of its subcontractors) and the contracting agency, the U.S. Department of Labor, or the employees or their representatives.

10. Certification of eligibility.

a. By entering into this contract, the contractor certifies that neither it (nor he or she) nor any person or firm who has an interest in the contractor's firm is a person or firm ineligible to be awarded Government contracts by virtue of section 3(a) of the Davis-Bacon Act or 29 CFR 5.12(a)(1).

b. No part of this contract shall be subcontracted to any person or firm ineligible for award of a Government contract by virtue of section 3(a) of the Davis-Bacon Act or 29 CFR 5.12(a)(1).

c. The penalty for making false statements is prescribed in the U.S. Criminal Code, 18 U.S.C. 1001.

V. CONTRACT WORK HOURS AND SAFETY STANDARDS ACT

The following clauses apply to any Federal-aid construction contract in an amount in excess of $100,000 and subject to the overtime provisions of the Contract Work Hours and Safety Standards Act. These clauses shall be inserted in addition to the clauses required by 29 CFR 5.5(a) or 29 CFR 4.6. As used in this paragraph, the terms laborers and mechanics include watchmen and guards.

1. Overtime requirements. No contractor or subcontractor contracting for any part of the contract work which may require or involve the employment of laborers or mechanics shall require or permit

any such laborer or mechanic in any workweek in which he or she is employed on such work to work in excess of forty hours in such workweek unless such laborer or mechanic receives compensation at a rate not less than one and one-half times the basic rate of pay for all hours worked in excess of forty hours in such workweek.

2. Violation; liability for unpaid wages; liquidated damages. In the event of any violation of the clause set forth in paragraph (1.) of this section, the contractor and any subcontractor responsible therefor shall be liable for the unpaid wages. In addition, such contractor and subcontractor shall be liable to the United States (in the case of work done under contract for the District of Columbia or a territory, to such District or to such territory), for liquidated damages. Such liquidated damages shall be computed with respect to each individual laborer or mechanic, including watchmen and guards, employed in violation of the clause set forth in paragraph (1.) of this section, in the sum of $10 for each calendar day on which such individual was required or permitted to work in excess of the standard workweek of forty hours without payment of the overtime wages required by the clause set forth in paragraph (1.) of this section.

3. Withholding for unpaid wages and liquidated damages. The FHWA or the contacting agency shall upon its own action or upon written request of an authorized representative of the Department of Labor withhold or cause to be withheld, from any moneys payable on account of work performed by the contractor or subcontractor under any such contract or any other Federal contract with the same prime contractor, or any other federally-assisted contract subject to the Contract Work Hours and Safety Standards Act, which is held by the same prime contractor, such sums as may be determined to be necessary to satisfy any liabilities of such contractor or subcontractor for unpaid wages and liquidated damages as provided in the clause set forth in paragraph (2.) of this section.

4. Subcontracts. The contractor or subcontractor shall insert in any subcontracts the clauses set forth in paragraph (1.) through (4.) of this section and also a clause requiring the subcontractors to include these clauses in any lower tier subcontracts. The prime contractor shall be responsible for compliance by any subcontractor or lower tier subcontractor with the clauses set forth in paragraphs (1.) through (4.) of this section.

VI. SUBLETTING OR ASSIGNING THE CONTRACT

This provision is applicable to all Federal-aid construction contracts on the National Highway System.

1. The contractor shall perform with its own organization contract work amounting to not less than 30 percent (or a greater percentage if specified elsewhere in the contract) of the total original contract price, excluding any specialty items designated by the contracting agency. Specialty items may be performed by subcontract and the amount of any such specialty items performed may be deducted from the total original contract price before computing the amount of work required to be performed by the contractor's own organization (23 CFR 635.116).

a. The term “perform work with its own organization” refers to workers employed or leased by the prime contractor, and equipment owned or rented by the prime contractor, with or without operators. Such term does not include employees or equipment of a subcontractor or lower tier subcontractor, agents of the prime contractor, or any other assignees. The term may include payments for the costs of hiring leased employees from an employee leasing firm meeting all relevant Federal and State regulatory requirements. Leased employees may only be included in this term if the prime contractor meets all of the following conditions:

(1) the prime contractor maintains control over the supervision of the day-to-day activities of the leased employees;
(2) the prime contractor remains responsible for the quality of the work of the leased employees;
(3) the prime contractor retains all power to accept or exclude individual employees from work on the project; and
(4) the prime contractor remains ultimately responsible for the payment of predetermined minimum wages, the submission of payrolls, statements of compliance and all other Federal regulatory requirements.

b. "Specialty Items" shall be construed to be limited to work that requires highly specialized knowledge, abilities, or equipment not ordinarily available in the type of contracting organizations qualified and expected to bid or propose on the contract as a whole and in general are to be limited to minor components of the overall contract.

2. The contract amount upon which the requirements set forth in paragraph (1) of Section VI is computed includes the cost of material and manufactured products which are to be purchased or produced by the contractor under the contract provisions.

3. The contractor shall furnish (a) a competent superintendent or supervisor who is employed by the firm, has full authority to direct performance of the work in accordance with the contract requirements, and is in charge of all construction operations (regardless of who performs the work) and (b) such other of its own organizational resources (supervision, management, and engineering services) as the contracting officer determines is necessary to assure the performance of the contract.

4. No portion of the contract shall be sublet, assigned or otherwise disposed of except with the written consent of the contracting officer, or authorized representative, and such consent when given shall not be construed to relieve the contractor of any responsibility for the fulfillment of the contract. Written consent will be given only after the contracting agency has assured that each subcontract is evidenced in writing and that it contains all pertinent provisions and requirements of the prime contract.

5. The 30% self-performance requirement of paragraph (1) is not applicable to design-build contracts; however, contracting agencies may establish their own self-performance requirements.

VII. SAFETY: ACCIDENT PREVENTION

This provision is applicable to all Federal-aid construction contracts and to all related subcontracts.

1. In the performance of this contract the contractor shall comply with all applicable Federal, State, and local laws governing safety, health, and sanitation (23 CFR 635). The contractor shall provide all safeguards, safety devices and protective equipment and take any other needed actions as it determines, or as the contracting officer may determine, to be reasonably necessary to protect the life and health of employees on the job and the safety of the public and to protect property in connection with the performance of the work covered by the contract.

2. It is a condition of this contract, and shall be made a condition of each subcontract, which the contractor enters into pursuant to this contract, that the contractor and any subcontractor shall not permit any employee, in performance of the contract, to work in surroundings or under conditions which are unsanitary, hazardous or dangerous to his/her health or safety, as determined under

construction safety and health standards (29 CFR 1926) promulgated by the Secretary of Labor, in accordance with Section 107 of the Contract Work Hours and Safety Standards Act (40 U.S.C. 3704).

3. Pursuant to 29 CFR 1926.3, it is a condition of this contract that the Secretary of Labor or authorized representative thereof, shall have right of entry to any site of contract performance to inspect or investigate the matter of compliance with the construction safety and health standards and to carry out the duties of the Secretary under Section 107 of the Contract Work Hours and Safety Standards Act (40 U.S.C.3704).

VIII. FALSE STATEMENTS CONCERNING HIGHWAY PROJECTS

This provision is applicable to all Federal-aid construction contracts and to all related subcontracts.

In order to assure high quality and durable construction in conformity with approved plans and specifications and a high degree of reliability on statements and representations made by engineers, contractors, suppliers, and workers on Federal-aid highway projects, it is essential that all persons concerned with the project perform their functions as carefully, thoroughly, and honestly as possible. Willful falsification, distortion, or misrepresentation with respect to any facts related to the project is a violation of Federal law. To prevent any misunderstanding regarding the seriousness of these and similar acts, Form FHWA-1022 shall be posted on each Federal-aid highway project (23 CFR 635) in one or more places where it is readily available to all persons concerned with the project:

18 U.S.C. 1020 reads as follows:

"Whoever, being an officer, agent, or employee of the United States, or of any State or Territory, or whoever, whether a person, association, firm, or corporation, knowingly makes any false statement, false representation, or false report as to the character, quality, quantity, or cost of the material used or to be used, or the quantity or quality of the work performed or to be performed, or the cost thereof in connection with the submission of plans, maps, specifications, contracts, or costs of construction on any highway or related project submitted for approval to the Secretary of Transportation; or

Whoever knowingly makes any false statement, false representation, false report or false claim with respect to the character, quality, quantity, or cost of any work performed or to be performed, or materials furnished or to be furnished, in connection with the construction of any highway or related project approved by the Secretary of Transportation; or

Whoever knowingly makes any false statement or false representation as to material fact in any statement, certificate, or report submitted pursuant to provisions of the Federal-aid Roads Act approved July 1, 1916, (39 Stat. 355), as amended and supplemented;

Shall be fined under this title or imprisoned not more than 5 years or both."

IX. IMPLEMENTATION OF CLEAN AIR ACT AND FEDERAL WATER POLLUTION CONTROL ACT

This provision is applicable to all Federal-aid construction contracts and to all related subcontracts.

By submission of this bid/proposal or the execution of this contract, or subcontract, as appropriate, the bidder, proposer, Federal-aid construction contractor, or subcontractor, as appropriate, will be deemed to have stipulated as follows:

1. That any person who is or will be utilized in the performance of this contract is not prohibited from receiving an award due to a violation of Section 508 of the Clean Water Act or Section 306 of the Clean Air Act.
2. That the contractor agrees to include or cause to be included the requirements of paragraph (1) of this Section X in every subcontract, and further agrees to take such action as the contracting agency may direct as a means of enforcing such requirements.

X. CERTIFICATION REGARDING DEBARMENT, SUSPENSION, INELIGIBILITY AND VOLUNTARY EXCLUSION

This provision is applicable to all Federal-aid construction contracts, design-build contracts, subcontracts, lower-tier subcontracts, purchase orders, lease agreements, consultant contracts or any other covered transaction requiring FHWA approval or that is estimated to cost $25,000 or more – as defined in 2 CFR Parts 180 and 1200.

1**. Instructions for Certification – First Tier Participants:**

a. By signing and submitting this proposal, the prospective first tier participant is providing the certification set out below.

b. The inability of a person to provide the certification set out below will not necessarily result in denial of participation in this covered transaction. The prospective first tier participant shall submit an explanation of why it cannot provide the certification set out below. The certification or explanation will be considered in connection with the department or agency's determination whether to enter into this transaction. However, failure of the prospective first tier participant to furnish a certification or an explanation shall disqualify such a person from participation in this transaction.

c. The certification in this clause is a material representation of fact upon which reliance was placed when the contracting agency determined to enter into this transaction. If it is later determined that the prospective participant knowingly rendered an erroneous certification, in addition to other remedies available to the Federal Government, the contracting agency may terminate this transaction for cause of default.

d. The prospective first tier participant shall provide immediate written notice to the contracting agency to whom this proposal is submitted if any time the prospective first tier participant learns that its certification was erroneous when submitted or has become erroneous by reason of changed circumstances.

e. The terms "covered transaction," "debarred," "suspended," "ineligible," "participant," "person," "principal," and "voluntarily excluded," as used in this clause, are defined in 2 CFR Parts 180 and 1200. “First Tier Covered Transactions” refers to any covered transaction between a grantee or subgrantee of Federal funds and a participant (such as the prime or general contract). “Lower Tier Covered Transactions” refers to any covered transaction under a First Tier Covered Transaction (such as subcontracts). “First Tier Participant” refers to the participant who has entered into a covered

transaction with a grantee or subgrantee of Federal funds (such as the prime or general contractor). “Lower Tier Participant” refers any participant who has entered into a covered transaction with a First Tier Participant or other Lower Tier Participants (such as subcontractors and suppliers).

f. The prospective first tier participant agrees by submitting this proposal that, should the proposed covered transaction be entered into, it shall not knowingly enter into any lower tier covered transaction with a person who is debarred, suspended, declared ineligible, or voluntarily excluded from participation in this covered transaction, unless authorized by the department or agency entering into this transaction.

g. The prospective first tier participant further agrees by submitting this proposal that it will include the clause titled "Certification Regarding Debarment, Suspension, Ineligibility and Voluntary Exclusion-Lower Tier Covered Transactions," provided by the department or contracting agency, entering into this covered transaction, without modification, in all lower tier covered transactions and in all solicitations for lower tier covered transactions exceeding the $25,000 threshold.

h. A participant in a covered transaction may rely upon a certification of a prospective participant in a lower tier covered transaction that is not debarred, suspended, ineligible, or voluntarily excluded from the covered transaction, unless it knows that the certification is erroneous. A participant is responsible for ensuring that its principals are not suspended, debarred, or otherwise ineligible to participate in covered transactions. To verify the eligibility of its principals, as well as the eligibility of any lower tier prospective participants, each participant may, but is not required to, check the Excluded Parties List System website (https://www.epls.gov/), which is compiled by the General Services Administration.

i. Nothing contained in the foregoing shall be construed to require the establishment of a system of records in order to render in good faith the certification required by this clause. The knowledge and information of the prospective participant is not required to exceed that which is normally possessed by a prudent person in the ordinary course of business dealings.

j. Except for transactions authorized under paragraph (f) of these instructions, if a participant in a covered transaction knowingly enters into a lower tier covered transaction with a person who is suspended, debarred, ineligible, or voluntarily excluded from participation in this transaction, in addition to other remedies available to the Federal Government, the department or agency may terminate this transaction for cause or default.

* * * * *

2. Certification Regarding Debarment, Suspension, Ineligibility and Voluntary Exclusion – First Tier Participants:

a. The prospective first tier participant certifies to the best of its knowledge and belief, that it and its principals:

(1) Are not presently debarred, suspended, proposed for debarment, declared ineligible, or voluntarily excluded from participating in covered transactions by any Federal department or agency;

(2) Have not within a three-year period preceding this proposal been convicted of or had a civil judgment rendered against them for commission of fraud or a criminal offense in connection with

obtaining, attempting to obtain, or performing a public (Federal, State or local) transaction or contract under a public transaction; violation of Federal or State antitrust statutes or commission of embezzlement, theft, forgery, bribery, falsification or destruction of records, making false statements, or receiving stolen property;

(3) Are not presently indicted for or otherwise criminally or civilly charged by a governmental entity (Federal, State or local) with commission of any of the offenses enumerated in paragraph (a)(2) of this certification; and

(4) Have not within a three-year period preceding this application/proposal had one or more public transactions (Federal, State or local) terminated for cause or default.

b. Where the prospective participant is unable to certify to any of the statements in this certification, such prospective participant shall attach an explanation to this proposal.

2. **Instructions for Certification - Lower Tier Participants:**

(Applicable to all subcontracts, purchase orders and other lower tier transactions requiring prior FHWA approval or estimated to cost $25,000 or more - 2 CFR Parts 180 and 1200)

a. By signing and submitting this proposal, the prospective lower tier is providing the certification set out below.

b. The certification in this clause is a material representation of fact upon which reliance was placed when this transaction was entered into. If it is later determined that the prospective lower tier participant knowingly rendered an erroneous certification, in addition to other remedies available to the Federal Government, the department, or agency with which this transaction originated may pursue available remedies, including suspension and/or debarment.

c. The prospective lower tier participant shall provide immediate written notice to the person to which this proposal is submitted if at any time the prospective lower tier participant learns that its certification was erroneous by reason of changed circumstances.

d. The terms "covered transaction," "debarred," "suspended," "ineligible," "participant," "person," "principal," and "voluntarily excluded," as used in this clause, are defined in 2 CFR Parts 180 and 1200. You may contact the person to which this proposal is submitted for assistance in obtaining a copy of those regulations. “First Tier Covered Transactions” refers to any covered transaction between a grantee or subgrantee of Federal funds and a participant (such as the prime or general contract). “Lower Tier Covered Transactions” refers to any covered transaction under a First Tier Covered Transaction (such as subcontracts). “First Tier Participant” refers to the participant who has entered into a covered transaction with a grantee or subgrantee of Federal funds (such as the prime or general contractor). “Lower Tier Participant” refers any participant who has entered into a covered transaction with a First Tier Participant or other Lower Tier Participants (such as subcontractors and suppliers).

e. The prospective lower tier participant agrees by submitting this proposal that, should the proposed covered transaction be entered into, it shall not knowingly enter into any lower tier covered transaction with a person who is debarred, suspended, declared ineligible, or voluntarily excluded from participation in this covered transaction, unless authorized by the department or agency with which this transaction originated.

f. The prospective lower tier participant further agrees by submitting this proposal that it will include this clause titled "Certification Regarding Debarment, Suspension, Ineligibility and Voluntary Exclusion-Lower Tier Covered Transaction," without modification, in all lower tier covered transactions and in all solicitations for lower tier covered transactions exceeding the $25,000 threshold.

g. A participant in a covered transaction may rely upon a certification of a prospective participant in a lower tier covered transaction that is not debarred, suspended, ineligible, or voluntarily excluded from the covered transaction, unless it knows that the certification is erroneous. A participant is responsible for ensuring that its principals are not suspended, debarred, or otherwise ineligible to participate in covered transactions. To verify the eligibility of its principals, as well as the eligibility of any lower tier prospective participants, each participant may, but is not required to, check the Excluded Parties List System website (https://www.epls.gov/), which is compiled by the General Services Administration.

h. Nothing contained in the foregoing shall be construed to require establishment of a system of records in order to render in good faith the certification required by this clause. The knowledge and information of participant is not required to exceed that which is normally possessed by a prudent person in the ordinary course of business dealings.

i. Except for transactions authorized under paragraph e of these instructions, if a participant in a covered transaction knowingly enters into a lower tier covered transaction with a person who is suspended, debarred, ineligible, or voluntarily excluded from participation in this transaction, in addition to other remedies available to the Federal Government, the department or agency with which this transaction originated may pursue available remedies, including suspension and/or debarment.

* * * * *

Certification Regarding Debarment, Suspension, Ineligibility and Voluntary Exclusion--Lower Tier Participants:

1. The prospective lower tier participant certifies, by submission of this proposal, that neither it nor its principals is presently debarred, suspended, proposed for debarment, declared ineligible, or voluntarily excluded from participating in covered transactions by any Federal department or agency.

2. Where the prospective lower tier participant is unable to certify to any of the statements in this certification, such prospective participant shall attach an explanation to this proposal.

* * * * *

XI. CERTIFICATION REGARDING USE OF CONTRACT FUNDS FOR LOBBYING

This provision is applicable to all Federal-aid construction contracts and to all related subcontracts which exceed $100,000 (49 CFR 20).

1. The prospective participant certifies, by signing and submitting this bid or proposal, to the best of his or her knowledge and belief, that:

a. No Federal appropriated funds have been paid or will be paid, by or on behalf of the undersigned, to any person for influencing or attempting to influence an officer or employee of any Federal agency,

a Member of Congress, an officer or employee of Congress, or an employee of a Member of Congress in connection with the awarding of any Federal contract, the making of any Federal grant, the making of any Federal loan, the entering into of any cooperative agreement, and the extension, continuation, renewal, amendment, or modification of any Federal contract, grant, loan, or cooperative agreement.

b. If any funds other than Federal appropriated funds have been paid or will be paid to any person for influencing or attempting to influence an officer or employee of any Federal agency, a Member of Congress, an officer or employee of Congress, or an employee of a Member of Congress in connection with this Federal contract, grant, loan, or cooperative agreement, the undersigned shall complete and submit Standard Form-LLL, "Disclosure Form to Report Lobbying," in accordance with its instructions.

2. This certification is a material representation of fact upon which reliance was placed when this transaction was made or entered into. Submission of this certification is a prerequisite for making or entering into this transaction imposed by 31 U.S.C. 1352. Any person who fails to file the required certification shall be subject to a civil penalty of not less than $10,000 and not more than $100,000 for each such failure.

3. The prospective participant also agrees by submitting its bid or proposal that the participant shall require that the language of this certification be included in all lower tier subcontracts, which exceed $100,000 and that all such recipients shall certify and disclose accordingly.

ATTACHMENT A - EMPLOYMENT AND MATERIALS PREFERENCE FOR APPALACHIAN DEVELOPMENT HIGHWAY SYSTEM OR APPALACHIAN LOCAL ACCESS ROAD CONTRACTS

This provision is applicable to all Federal-aid projects funded under the Appalachian Regional Development Act of 1965.

1. During the performance of this contract, the contractor undertaking to do work which is, or reasonably may be, done as on-site work, shall give preference to qualified persons who regularly reside in the labor area as designated by the DOL wherein the contract work is situated, or the subregion, or the Appalachian counties of the State wherein the contract work is situated, except:

a. To the extent that qualified persons regularly residing in the area are not available.

b. For the reasonable needs of the contractor to employ supervisory or specially experienced personnel necessary to assure an efficient execution of the contract work.

c. For the obligation of the contractor to offer employment to present or former employees as the result of a lawful collective bargaining contract, provided that the number of nonresident persons employed under this subparagraph (1c) shall not exceed 20 percent of the total number of employees employed by the contractor on the contract work, except as provided in subparagraph (4) below.

2. The contractor shall place a job order with the State Employment Service indicating (a) the classifications of the laborers, mechanics and other employees required to perform the contract work, (b) the number of employees required in each classification, (c) the date on which the participant estimates such employees will be required, and (d) any other pertinent information required by the State Employment Service to complete the job order form. The job order may be placed with the State Employment Service in writing or by telephone. If during the course of the contract work, the information submitted by the contractor in the original job order is substantially modified, the participant shall promptly notify the State Employment Service.

3. The contractor shall give full consideration to all qualified job applicants referred to him by the State Employment Service. The contractor is not required to grant employment to any job applicants who, in his opinion, are not qualified to perform the classification of work required.

4. If, within one week following the placing of a job order by the contractor with the State Employment Service, the State Employment Service is unable to refer any qualified job applicants to the contractor, or less than the number requested, the State Employment Service will forward a certificate to the contractor indicating the unavailability of applicants. Such certificate shall be made a part of the contractor's permanent project records. Upon receipt of this certificate, the contractor may employ persons who do not normally reside in the labor area to fill positions covered by the certificate, notwithstanding the provisions of subparagraph (1c) above.

5. The provisions of 23 CFR 633.207(e) allow the contracting agency to provide a contractual preference for the use of mineral resource materials native to the Appalachian region.

EXHIBIT B

TITLE VI CONTRACTOR ASSURANCES

During the performance of this Contract, the contractor, for itself, its assignees and successors in interest (hereinafter referred to as the "Contractor") agrees as follows:

1. **Compliance with Regulations:** The Contractor shall comply with the regulations relative to nondiscrimination in federally assisted programs of the United States Department of Transportation (hereinafter, "USDOT"), Title 49, Code of Federal Regulations, Part 21, as they may be amended from time to time (hereinafter referred to as the "Regulations"), which are herein incorporated by reference and made a part of this contract.

2. **Nondiscrimination:** The Contractor, with regard to the work performed by it during the Contract, shall not discriminate on the grounds of race, color, national origin, sex, age, or disability in the selection and retention of subcontractors, including procurements of materials and leases of equipment. The Contractor shall not participate either directly or indirectly in the discrimination prohibited by Subsection 5 of the Regulations, including employment practices when the Contract covers a program set forth in Appendix B of the Regulations.

3. **Solicitations for Subcontracts, Including Procurements of Materials and Equipment:**
In all solicitations either by competitive bidding or negotiation made by the Contractor for work to be performed under a subcontract, including procurements of materials or leases of equipment, each potential subcontractor or supplier shall be notified by the Contractor of the Contractor's obligations under this contract and the Regulations relative to nondiscrimination on the grounds of race, color, national origin, sex, age, or disability.

4. **Information and Reports:** The Contractor shall provide all information and reports required by the Regulations or directives issued pursuant thereto and shall permit access to its books, records, accounts, other sources of information, and its facilities as may be determined by the Connecticut Department of Transportation (ConnDOT) or the Funding Agency (FHWA, FTA and FAA) to be pertinent to ascertain compliance with such Regulations, orders, and instructions. Where any information required of a Contractor is in the exclusive possession of another who fails or refuses to furnish this information, the Contractor shall so certify to ConnDOT or the Funding Agency, as appropriate, and shall set forth what efforts it has made to obtain the information.

5. **Sanctions for Noncompliance:** In the event of the Contractor's noncompliance with the nondiscrimination provisions of this Contract, the ConnDOT shall impose such sanctions as it or the Funding Agency may determine to be appropriate, including, but not limited to:

A. Withholding contract payments until the Contractor is in-compliance; and/or
B. Cancellation, termination, or suspension of the Contract, in whole or in part.

6. **Incorporation of Provisions:** The Contractor shall include the provisions of paragraphs 1 through 5 in every subcontract, including procurements of materials and leases of equipment, unless exempt by the Regulations or directives issued pursuant thereto. The Contractor shall take such action with respect to any subcontract or procurement as the ConnDOT or the Funding Agency may -direct as a means of enforcing such provisions including sanctions for noncompliance. Provided, however, that in the event a Contractor becomes involved in, or is threatened with, litigation with a subcontractor or supplier as a result of such direction, the Contractor may request the ConnDOT to enter into such litigation to protect the interests of the Funding Agency, and, in addition, the Contractor may request the United States to enter into such litigation to protect the interests of the United States

EXHIBIT C

CONTRACTOR WORKFORCE UTILIZATION (FEDERAL EXECUTIVE ORDER 11246) / EQUAL EMPLOYMENT OPPORTUNITY (Federal - FHWA)

1. **Project Workforce Utilization Goals:**
   These goals are applicable to all the Contractor's construction work (whether or not it is Federal or Federally assisted or funded) performed in the covered area. If the contractor performs construction work in a geographical area located outside of the covered area, it shall apply the goals established for the geographical area where the work is actually performed.

   Whenever the Contractor, or any Subcontractor at any tier, subcontracts a portion of the work involving any construction trade, it shall physically include in each subcontract in excess of $10,000 the provisions of these specifications which contain the applicable goals for minority and female participation.

   The goals for minority and female utilization are expressed in percentage terms for the contractor's aggregate work-force in each trade on all construction work in the covered area, are referenced in the attached Appendix A.

2. **Executive Order 11246**
   The Contractor's compliance with Executive Order 11246 and 41-CFR Part 60-4 shall be based on its implementation of the specific affirmative action obligations required by the specifications set forth in 41 CFR 60-4.3(A) and its efforts to meet the goals established for the geographical area where the contract is to be performed. The hours of minority and female employment and training must be substantially uniform throughout the length of the contract, and in each trade, and the contractor shall make a good faith effort to employ minorities and women evenly on each of its projects. The transfer of minority or female employees or trainees from contractor to contractor or from project to project for the sole purpose of meeting the contractor's goals shall be a violation of the contract, the Executive Order and the regulations in 41 CFR Part 60-4. Compliance with the goals will be measured against the total work hour performed.

   If the Contractor is participating (pursuant to 41 CFR 60-4.5) in a Hometown Plan approved by the U.S. Department of Labor in the covered area either individually or through an association, its affirmative action obligations on all work in the Plan area (including goals and timetables) shall be in accordance with that Plan for those trades which have unions participating in the Plan. Contractors must be able to demonstrate their participation in and compliance with the provisions of any such Hometown Plan. Each Contractor or Subcontractor participating in an approved Plan is individually required to comply with its obligations under the EEO clause, and to make a good faith effort to achieve each goal under the Plan in each trade in which it has employees. The overall good faith performance by other Contractors or subcontractors toward a goal in an approved Pan does not excuse any covered Contractor's of subcontractor's failure to take good faith efforts to achieve the plan goals and timetables.

   The Contractor shall implement the specific affirmative action standards provided in a through p of these specifications. The goals set forth in the solicitation from which this contract resulted are expressed as percentages of the total hours of employment and training of minority and female utilization the Contractor should reasonably be able to achieve in each construction trade in

which it has employees in the covered area. Covered Construction contractors performing construction work in geographical areas where they do not have a federal or federally assisted construction contract shall apply the minority and female goals established for the geographical area where the work is being performed. Goals are published periodically in the Federal Register in notice form and such notices may be obtained from any Office of Federal Contract Compliance Programs (OFCCP) Office or from Federal procurement contracting officers. The Contractor is expected to make substantially uniform progress in meeting its goals in each craft during the period specified.

Neither the provisions of any collective bargaining agreement, nor the failure by a union with whom the Contractor has a collective bargaining agreement, to refer either minorities or women shall excuse the Contractors obligations under these specifications, Executive Order 11246, or the regulations promulgated pursuant hereto.

In order for the nonworking training hours of apprentices and trainees to be counted in meeting the goals, such apprentices and trainees must be employed by the Contractor during the training period, and the Contractor must have made a commitment to employ the apprentices and trainees at the completion of their training, subject to the availability of employment opportunities. Trainees must be trained pursuant to training programs approved by the U.S. Department of Labor.

The Contractor shall take specific affirmative actions to ensure equal employment opportunity. The evaluation of the Contractor's compliance with these specifications shall be based upon its effort to achieve maximum results from its actions. The Contractor shall document these efforts fully, and shall implement affirmative action steps at least as extensive as the following:

a. Ensure and maintain a working environment free of harassment, intimidation, and coercion at all sites; and in all facilities at which the Contractor's employees are assigned to work. The Contractor, where possible, will assign two or more women to each construction project. The Contractor shall specifically ensure that all foremen, superintendents, and other on-site supervisory personnel are aware of and carry out the Contractor's obligation to maintain such a working environment, with specific attention to minority or female individuals working at such sites or in such facilities.

b. Establish and maintain a current list of minority and female recruitment sources, provide written notification to minority and female recruitment sources and to community organizations when the Contractor or its unions have employment opportunities available, and maintain a record of the organizations' responses.

c. Maintain a current file of the names, addresses and telephone numbers of each minority and female off the street applicant and minority or female referral from a union, a recruitment source or community organization and of what action was taken with respect to each such individual. If such individual was sent to the union hiring hall for referral and was not referred back to the Contractor by the union or, if referred, not employed by the Contractor, this shall be documented in the file with the reason thereafter; along with whatever additional actions the Contractor may have taken.

d. Provide immediate written notification to the Director when the Union or Unions with which the Contractor has a collective bargaining agreement has not referred to the Contractor a minority person or women sent by the Contractor, or when the Contractor has other

information that the Union referral process has impeded the Contractor's efforts to meet its obligations.

e. Develop on-the-job training opportunities and/or participate in training programs for the area which expressly include minorities and women, including upgrading programs and apprenticeship and trainee programs relevant to the Contractor's employment needs, especially those programs funded or approved by the Department of Labor. The Contractor shall provide notice of these programs to the sources compiled under b above.

f. Disseminate the Contractor's EEO policy by providing notice of the policy to unions and training programs and requesting their cooperation in assisting the Contractor in meeting its EEO obligations; by including it in any policy manual and collective bargaining agreement; by publicizing it in the company newspaper, annual report, etc.; by specific review of the policy with all management personnel and with all minority and female employees at least once a year; and by posting the company EEO Policy on bulletin boards accessible to all employees at each location where construction work is performed.

g. Review, at least annually, the company EEO Policy and affirmative action obligations under these specifications with all employees having any responsibility for hiring, assignment, layoff, termination or other employment, decisions including specific Foreman, etc. prior to the initiation of construction work at any job site. A written record shall be made and maintained identifying the time and place of these meetings, persons attending, subject matter discussed, and disposition of the subject matter.

h. Disseminate the Contractor's EEO Policy externally by including it in any advertising in the news media, specifically including minority and female news media, and providing written notification to and discussing the Contractor's EEO policy with other Contractors and subcontractors with whom the Contractor does or anticipates doing business.

i. Direct its recruitment efforts, both oral and written, to minority female and community organizations, to schools with minority and female students and to minority and female recruitment and training organizations serving the Contractor's recruitment area and employment needs. Not later than one month prior to the date for the acceptance of applications for apprenticeship or other training by any recruitment source, the contractor shall send written notification to organizations such as the above, describing the openings, screening procedures and tests to be used in the selection process.

j. Encourage present minority and female employees to recruit other minority persons and women and, where reasonable, provide after school, summer and vacation employment to minority and female youth both on the site and in other areas of a Contractor's work-force.

k. Validate all tests and other selection requirements where there is an obligation to do so under 41 CFR Part 60-3.

l. Conduct, at least annually, an inventory and evaluation at least of all minority and female personnel for promotional opportunities and encourage these employees to seek or to prepare for, through appropriate training, etc., such opportunities.

m. Ensure that seniority practices, job classifications, work assignments and other personnel practices, do not have a discriminatory effect by continually monitoring all personnel and

employment related activities to ensure that the EEO policy and the Contractor's obligations under these specifications are being carried out.

n. Ensure that all facilities and company activities are non-segregated except that separate or single user toilet and necessary changing facilities shall be provided to assure privacy between the sexes.

o. Document and maintain a record of all solicitations of offers for subcontracts from minority and female construction contractors and suppliers, including circulation of solicitations to minority and female contractor associations and other business associations.

p. Conduct a review at least annually of all supervisors' adherence to and performance under the Contractor's EEO policies and affirmative action obligations.

Contractors are encouraged to participate in voluntary associations which assist in fulfilling one or more of their affirmative action obligations (a through p). The efforts of a contractor association, joint contractor union, contractor community, or other similar group of which the contractor is a member and participant, may be asserted as fulfilling any one or more of its obligations under a through p of these specifications provided that the contractor actively participates in the group, makes every effort to assure that the group has a positive impact on the employment of minorities and women in the industry, ensures that the concrete benefits of the program are reflected in the Contractor's minority and female work-force participation, makes a good faith effort to meet with individual goals and timetables, and can provide access to documentation which demonstrates the effectiveness of actions taken on behalf of the Contractor. The obligation to comply, however, is the Contractor's and failure of such a group to fulfill an obligation shall not be a defense for the Contractor's noncompliance.

A single goal for minorities and a separate single goal for women have been established. The Contractor, however, is required to provide equal employment opportunity and to take affirmative action for all minority groups, both male and female, and all women, both minority and non-minority. Consequently, the Contractor may be in violation of Executive Order 11246 if a particular group is employed in a substantially disparate manner, (for example, even though the Contractor has achieved its goals for women generally, the Contractor may be in violation of the Executive Order if a specific minority group of women is under utilized).

The Contractor shall not use the goals and timetables or affirmative action standards to discriminate against any person because of race, color, religion, sex, or national origin.

The Contractor shall not enter into any Subcontract with any person or firm debarred from Government contracts pursuant to Executive Order 11246.

The Contractor shall carry out such sanctions and penalties for violation of these specifications and of the Equal Opportunity Clause, including suspension, termination and cancellation of existing subcontracts as may be imposed or ordered pursuant to Executive Order 11246, as amended, and its implementing regulations by the Office of Federal Contract Compliance Programs. Any Contractor who fails to carry out such sanctions and penalties shall be in violation of these specifications and Executive Order 11246, as amended.

The Contractor, in fulfilling its obligations under these specifications, shall implement specific affirmative action steps, at least as extensive as those standards prescribed in these

specifications, so as to achieve maximum results from its efforts to ensure equal employment opportunity. If the Contractor fails to comply with the requirements of the Executive Order, the implementing regulations, or these specifications, the Director shall proceed in accordance with 41 CFR 60-4 8.

The Contractor shall designate a responsible official to monitor all employment related activity to ensure that the company EEO policy is being carried out, to submit reports relating to the provisions hereof as may be required by the Government and to keep records. Records shall at least include for each employee the name, address, telephone numbers, construction trade, union affiliation if any, employee identification number when assigned, social security number, race, sex, status, (e.g. mechanic, apprentice, trainee, helper, or laborer) dates of changes in status, hours worked per week in the indicated trade, rate of pay, and locations at which the work was performed. Records shall be maintained in an easily understandable and retrievable form; however, to the degree that existing records satisfy this requirement, contractors shall not be required to maintain separate records.

Nothing herein provided shall be construed as a limitation upon the application of their laws which establish different standards of compliance or upon the application of requirements for the hiring of local or other area residents (e.g. those under the Public Works Employment Act of 1977 and the Community Development Block Grant Program).

The Director of the Office of Federal Contract Compliance Programs, from time to time, shall issue goals and timetables for minority and female utilization which shall be based on appropriate work-force, demographic or other relevant data and which shall cover construction projects or construction contracts performed in specific geographical areas. The goals, which shall be applicable to each construction trade in a covered contractor's or timetables, shall be published as notices in the Federal Register, and shall be inserted by the Contracting officers and applicants, as applicable, in the Notice required by 41 CFR 60-4.2.

FEDERALLY FUNDED OR ASSISTED PROJECTS
APPENDIX A
(Labor Market Goals)

Standard Metropolitan Statistical Area (SMSA)

Female **Minority**

Bridgeport – Stamford – Norwalk – Danbury			**10.2%**
6.9%			
Bethel	Bridgeport	Brookfield	Danbury
Darien	Derby	Easton	Fairfield
Greenwich	Milford	Monroe	New Canaan
New Fairfield	Newton	Norwalk	Redding
Shelton	Stamford	Stratford	Trumbull
Weston	Westport	Wilton	

Hartford – Bristol – New Britain			**6.9%**
6.9%			
Andover	Avon	Berlin	Bloomfield
Bolton	Bristol	Burlington	Canton
Colchester	Columbia	Coventry	Cromwell
East Granby	East Hampton	East Hartford	East Windsor
Ellington	Enfield	Farmington	Glastonbury
Granby	Hartford	Hebron	Manchester
Marlborough	New Britain	New Hartford	Newington
Plainville	Plymouth	Portland	Rocky Hill
Simsbury	South Windsor	Southington	Stafford
Suffield	Tolland	Vernon	West Hartford
Wethersfield	Willington	Windsor	Windsor Locks

New Haven – Waterbury – Meriden			**9.0%**
6.9%			
Beacon Falls	Bethany	Branford	Cheshire
Clinton	East Haven	Guilford	Hamden
Madison	Meriden	Middlebury	Naugatuck
New Haven	North Branford	North Haven	Orange
Prospect	Southbury	Thomaston	Wallingford
Waterbury	Watertown	West Haven	Wolcott
Woodbridge	Woodbury		

New London – Norwich			**4.5%**
6.9%			
Bozrah	East Lyme	Griswold	Groton
Ledyard	Lisbon	Montville	New London
Norwich	Old Lyme	Old Saybrook	Preston
Sprague	Stonington	Waterford	

Non SMSA

Female				**Minority**
Litchfield – Windham 6.9%				**5.9%**
Abington	Ashford	Ballouville	Bantam	
Barkhamsted	Bethlehem	Bridgewater	Brooklyn	
Canaan	Canterbury	Central Village	Cahplin	
Colebrook	Cornwall	Cornwall Bridge	Danielson	
Dayville	East Canaan	East Killingly	East Woodstock	
Eastford	Falls Village	Gaylordsville	Goshen	
Grosvenor Dale	Hampton	Harwinton	Kent	
Killignly	Lakeside	Litchfield	Moosup	
Morris	New Milford	New Preston	New Preston Marble Dale	
Norfolk	North Canaan	No. Grosvenordale	North Windham	
Oneco	Pequabuck	Pine Meadow	Plainfield	
Pleasant Valley	Pomfret	Pomfret Center	Putnam	
Quinebaug	Riverton	Rogers	Roxbury	
Salisbury	Scotland	Sharon	South Kent	
South Woodstock	Sterling	Taconic	Terryville	
Thompson	Torrington	Warren	Warrenville	
Washington	Washington Depot	Wauregan	West Cornwall	
Willimantic	Winchester	Winchester Center	Windham	
Winsted	Woodstock	Woodstock Valley		

EXHIBIT D

Health Insurance Portability and Accountability Act of 1996 ("HIPAA").

(a) If the Contactor is a Business Associate under the requirements of the Health Insurance Portability and Accountability Act of 1996 ("HIPAA"), the Contractor must comply with all terms and conditions of this Section of the Contract. If the Contractor is not a Business Associate under HIPAA, this Section of the Contract does not apply to the Contractor for this Contract.

(b) The Contractor is required to safeguard the use, publication and disclosure of information on all applicants for, and all clients who receive, services under the Contract in accordance with all applicable federal and state law regarding confidentiality, which includes but is not limited to HIPAA, more specifically with the Privacy and Security Rules at 45 C.F.R. Part 160 and Part 164, subparts A, C, and E; and

(c) The State of Connecticut Agency named on page 1 of this Contract (hereinafter the "Department") is a "covered entity" as that term is defined in 45 C.F.R. § 160.103; and

(d) The Contractor, on behalf of the Department, performs functions that involve the use or disclosure of "individually identifiable health information," as that term is defined in 45 C.F.R. § 160.103; and

(e) The Contractor is a "business associate" of the Department, as that term is defined in 45 C.F.R. § 160.103; and

(f) The Contractor and the Department agree to the following in order to secure compliance with the HIPAA, the requirements of Subtitle D of the Health Information Technology for Economic and Clinical Health Act (hereinafter the HITECH Act), (Pub. L. 111-5, sections 13400 to 13423), and more specifically with the Privacy and Security Rules at 45 C.F.R. Part 160 and Part 164, subparts A, C, and E.

(g) Definitions

(1) "Breach shall have the same meaning as the term is defined in section 13400 of the HITECH Act (42 U.S.C. §17921(1))

(2) "Business Associate" shall mean the Contractor.

(3) "Covered Entity" shall mean the Department of the State of Connecticut named on page 1 of this Contract.

(4) "Designated Record Set" shall have the same meaning as the term "designated record set" in 45 C.F.R. § 164.501.

(5) "Electronic Health Record" shall have the same meaning as the term is defined in section 13400 of the HITECH Act (42 U.S.C. §17921(5))

(6) "Individual" shall have the same meaning as the term "individual"' in 45 C.F.R. § 160.103 and shall include a person who qualifies as a personal representative as defined in 45 C.F.R. § 164.502(g).

(7) "Privacy Rule" shall mean the Standards for Privacy of Individually Identifiable Health Information at 45 C.F.R. part 160 and parts 164, subparts A and E.

(8) "Protected Health Information" or "PHI" shall have the same meaning as the term "protected health information" in 45 C.F.R. § 160.103, limited to information created or received by the Business Associate from or on behalf of the Covered Entity.

(9) "Required by Law"' shall have the same meaning as the term "required by law" in 45 C.F.R. § 164.103.

(10) "Secretary" shall mean the Secretary of the Department of Health and Human Services or his designee.

(11) "More stringent" shall have the same meaning as the term "more stringent" in 45 C.F.R. § 160.202.

(12) "This Section of the Contract" refers to the HIPAA Provisions stated herein, in their entirety.

(13) "Security Incident" shall have the same meaning as the term "security incident" in 45 C.F.R.§ 164.304.

(14) "Security Rule" shall mean the Security Standards for the Protection of Electronic Protected Health Information at 45 C.F.R. part 160 and parts 164, subpart A and C.

(15) "Unsecured protected health information" shall have the same meaning as the term as defined in section 13402(h)(1)(A) of HITECH. Act. (42 U.S.C. §17932(h)(1)(A)).

(h) Obligations and Activities of Business Associates.

(1) Business Associate agrees not to use or disclose PHI other than as permitted or required by this Section of the Contract or as Required by Law.

(2) Business Associate agrees to use appropriate safeguards to prevent use or disclosure of PHI other than as provided for in this Section of the Contract.

(3) Business Associate agrees to use administrative, physical and technical safeguards that reasonably and appropriately protect the confidentiality, integrity, and availability of electronic protected health information that it creates, receives, maintains, or transmits on behalf of the Covered Entity.

(4) Business Associate agrees to mitigate, to the extent practicable, any harmful effect that is known to the Business Associate of a use or disclosure of PHI by Business Associate in violation of this Section of the Contract.

(5) Business Associate agrees to report to Covered Entity any use or disclosure of PHI not provided for by this Section of the Contract or any security incident of which it becomes aware.

(6) Business Associate agrees to insure that any agent, including a subcontractor, to whom it provides PHI received from, or created or received by Business Associate, on behalf of the Covered Entity, agrees to the same restrictions and conditions that apply through this Section of the Contract to Business Associate with respect to such information.

(7) Business Associate agrees to provide access, at the request of the Covered Entity, and in the time and manner agreed to by the parties, to PHI in a Designated Record Set, to Covered Entity or, as directed by Covered Entity, to an Individual in order to meet the requirements under 45 C.F.R. § 164.524.

(8) Business Associate agrees to make any amendments to PHI in a Designated Record Set that the Covered Entity directs or agrees to pursuant to 45 C.F.R. § 164.526 at the request of the Covered Entity, and in the time and manner agreed to by the parties.

(9) Business Associate agrees to make internal practices, books, and records, including policies and procedures and PHI, relating to the use and disclosure of PHI received from, or created or received by, Business Associate on behalf of Covered Entity, available to Covered Entity or to the Secretary in a time and manner agreed to by the parties or designated by the Secretary, for purposes of the Secretary determining Covered Entity's compliance with the Privacy Rule.

(10) Business Associate agrees to document such disclosures of PHI and information related to such disclosures as would be required for Covered Entity to respond to a request by an Individual for an accounting of disclosures of PHI in accordance with 45 C.F.R. § 164.528 and section 13405 of the HITECH Act (42 U.S.C. § 17935) and any regulations promulgated thereunder.

(11) Business Associate agrees to provide to Covered Entity, in a time and manner agreed to by the parties, information collected in accordance with clause h. (10) of this Section of the Contract, to permit Covered Entity to respond to a request by an Individual for an accounting of disclosures of PHI in accordance with 45 C.F.R. § 164.528 and section 13405 of the HITECH Act (42 U.S.C. § 17935) and any regulations promulgated thereunder. Business Associate agrees at the Covered Entity's direction to provide an accounting of disclosures of PHI directly to an individual in accordance with 45 C.F.R. § 164.528 and section 13405 of the HITECH Act (42 U.S.C. § 17935) and any regulations promulgated thereunder.

(12) Business Associate agrees to comply with any state or federal law that is more stringent than the Privacy Rule.

(13) Business Associate agrees to comply with the requirements of the HITECH Act relating to privacy and security that are applicable to the Covered Entity and with the requirements of 45 C.F.R. sections 164.504(e), 164.308, 164.310, 164.312, and 164.316.

(14) In the event that an individual requests that the Business Associate (a) restrict disclosures of PHI; (b) provide an accounting of disclosures of the individual's PHI; or (c) provide a copy of the individual's PHI in an electronic health record, the Business Associate agrees to notify the covered entity, in writing, within two business days of the request.

(15) Business Associate agrees that it shall not, directly or indirectly, receive any remuneration in exchange for PHI of an individual without (1) the written approval of the covered entity, unless receipt of remuneration in exchange for PHI is expressly authorized by this Contract and (2) the valid authorization of the individual, except for the purposes provided under section 13405(d)(2) of the HITECH Act,(42 U.S.C. § 17935(d)(2)) and in any accompanying regulations

(16) Obligations in the Event of a Breach

A. The Business Associate agrees that, following the discovery of a breach of unsecured protected health information, it shall notify the Covered Entity of such breach in accordance with the requirements of section 13402 of HITECH (42 U.S.C. 17932(b) and the provisions of this Section of the Contract.
B. Such notification shall be provided by the Business Associate to the Covered Entity without unreasonable delay, and in no case later than 30 days after the breach is discovered by the Business Associate, except as otherwise instructed in writing by a law enforcement official pursuant to section 13402 (g) of HITECH (42 U.S.C. 17932(g)) . A breach is considered discovered as of the first day on which it is, or reasonably should have been, known to the Business Associate. The notification shall include the identification and last known address, phone number and email address of each individual (or the next of kin of the individual if the individual is deceased) whose unsecured protected health information has been, or is reasonably believed by the Business Associate to have been, accessed, acquired, or disclosed during such breach.
C. The Business Associate agrees to include in the notification to the Covered Entity at least the following information:
    1. A brief description of what happened, including the date of the breach and the date of the discovery of the breach, if known.

    2. A description of the types of unsecured protected health information that were involved in the breach (such as full name, Social Security number, date of birth, home address, account number, or disability code).

    3. The steps the Business Associate recommends that individuals take to protect themselves from potential harm resulting from the breach.

    4. A detailed description of what the Business Associate is doing to investigate the breach, to mitigate losses, and to protect against any further breaches.

    5. Whether a law enforcement official has advised either verbally or in writing the Business Associate that he or she has determined that notification or notice to

individuals or the posting required under section 13402 of the HITECH Act would impede a criminal investigation or cause damage to national security and; if so, include contact information for said official.

D. Business Associate agrees to provide appropriate staffing and have established procedures to ensure that individuals informed by the Covered Entity of a breach by the Business Associate have the opportunity to ask questions and contact the Business Associate for additional information regarding the breach. Such procedures shall include a toll-free telephone number, an e-mail address, a posting on its Web site and a postal address. Business Associate agrees to include in the notification of a breach by the Business Associate to the Covered Entity, a written description of the procedures that have been established to meet these requirements. Costs of such contact procedures will be borne by the Contractor.

E. Business Associate agrees that, in the event of a breach, it has the burden to demonstrate that it has complied with all notifications requirements set forth above, including evidence demonstrating the necessity of a delay in notification to the Covered Entity.

(i) Permitted Uses and Disclosure by Business Associate.

(1) General Use and Disclosure Provisions Except as otherwise limited in this Section of the Contract, Business Associate may use or disclose PHI to perform functions, activities, or services for, or on behalf of, Covered Entity as specified in this Contract, provided that such use or disclosure would not violate the Privacy Rule if done by Covered Entity or the minimum necessary policies and procedures of the Covered Entity.

(2) Specific Use and Disclosure Provisions

(A) Except as otherwise limited in this Section of the Contract, Business Associate may use PHI for the proper management and administration of Business Associate or to carry out the legal responsibilities of Business Associate.

(B) Except as otherwise limited in this Section of the Contract, Business Associate may disclose PHI for the proper management and administration of Business Associate, provided that disclosures are Required by Law, or Business Associate obtains reasonable assurances from the person to whom the information is disclosed that it will remain confidential and used or further disclosed only as Required by Law or for the purpose for which it was disclosed to the person, and the person notifies Business Associate of any instances of which it is aware in which the confidentiality of the information has been breached.

(C) Except as otherwise limited in this Section of the Contract, Business Associate may use PHI to provide Data Aggregation services to Covered Entity as permitted by 45 C.F.R. § 164.504(e)(2)(i)(B).

(j) Obligations of Covered Entity.

(1) Covered Entity shall notify Business Associate of any limitations in its notice of privacy practices of Covered Entity, in accordance with 45 C.F.R. § 164.520, or to the extent that such limitation may affect Business Associate's use or disclosure of PHI.

(2) Covered Entity shall notify Business Associate of any changes in, or revocation of, permission by Individual to use or disclose PHI, to the extent that such changes may affect Business Associate's use or disclosure of PHI.

(3) Covered Entity shall notify Business Associate of any restriction to the use or disclosure of PHI that Covered Entity has agreed to in accordance with 45 C.F.R. § 164.522, to the extent that such restriction may affect Business Associate's use or disclosure of PHI.

(k) Permissible Requests by Covered Entity. Covered Entity shall not request Business Associate to use or disclose PHI in any manner that would not be permissible under the Privacy Rule if done by the Covered Entity, except that Business Associate may use and disclose PHI for data aggregation, and management and administrative activities of Business Associate, as permitted under this Section of the Contract.

(l) Term and Termination.

(1) Term. The Term of this Section of the Contract shall be effective as of the date the Contract is effective and shall terminate when the information collected in accordance with clause h. (10) of this Section of the Contract is provided to the Covered Entity and all of the PHI provided by Covered Entity to Business Associate, or created or received by Business Associate on behalf of Covered Entity, is destroyed or returned to Covered Entity, or, if it is infeasible to return or destroy PHI, protections are extended to such information, in accordance with the termination provisions in this Section.

(2) Termination for Cause Upon Covered Entity's knowledge of a material breach by Business Associate, Covered Entity shall either:

(A) Provide an opportunity for Business Associate to cure the breach or end the violation and terminate the Contract if Business Associate does not cure the breach or end the violation within the time specified by the Covered Entity; or

(B) Immediately terminate the Contract if Business Associate has breached a material term of this Section of the Contract and cure is not possible; or

(C) If neither termination nor cure is feasible, Covered Entity shall report the violation to the Secretary.

(3) Effect of Termination

(A) Except as provided in (l)(2) of this Section of the Contract, upon termination of this Contract, for any reason, Business Associate shall return or destroy all PHI received from Covered Entity, or created or received by Business Associate on behalf of Covered Entity. Business Associate shall also provide the information collected in accordance with clause h. (10) of this Section of the Contract to the Covered Entity

within ten business days of the notice of termination. This provision shall apply to PHI that is in the possession of subcontractors or agents of Business Associate. Business Associate shall retain no copies of the PHI.

(B) In the event that Business Associate determines that returning or destroying the PHI is infeasible, Business Associate shall provide to Covered Entity notification of the conditions that make return or destruction infeasible. Upon documentation by Business Associate that return or destruction of PHI is infeasible, Business Associate shall extend the protections of this Section of the Contract to such PHI and limit further uses and disclosures of PHI to those purposes that make return or destruction infeasible, for as long as Business Associate maintains such PHI. Infeasibility of the return or destruction of PHI includes, but is not limited to, requirements under state or federal law that the Business Associate maintains or preserves the PHI or copies thereof.

(m) Miscellaneous Provisions.

(1) Regulatory References. A reference in this Section of the Contract to a section in the Privacy Rule means the section as in effect or as amended.

(2) Amendment. The Parties agree to take such action as in necessary to amend this Section of the Contract from time to time as is necessary for Covered Entity to comply with requirements of the Privacy Rule and the Health Insurance Portability and Accountability Act of 1996, Pub. L. No. 104-191.

(3) Survival. The respective rights and obligations of Business Associate shall survive the termination of this Contract.

(4) Effect on Contract. Except as specifically required to implement the purposes of this Section of the Contract, all other terms of the Contract shall remain in force and effect.

(5) Construction. This Section of the Contract shall be construed as broadly as necessary to implement and comply with the Privacy Standard. Any ambiguity in this Section of the Contract shall be resolved in favor of a meaning that complies, and is consistent with, the Privacy Standard.

(6) Disclaimer. Covered Entity makes no warranty or representation that compliance with this Section of the Contract will be adequate or satisfactory for Business Associate's own purposes. Covered Entity shall not be liable to Business Associate for any claim, civil or criminal penalty, loss or damage related to or arising from the unauthorized use or disclosure of PHI by Business Associate or any of its officers, directors, employees, contractors or agents, or any third party to whom Business Associate has disclosed PHI contrary to the provisions of this Contract or applicable law. Business Associate is solely responsible for all decisions made, and actions taken, by Business Associate regarding the safeguarding, use and disclosure of PHI within its possession, custody or control.

(7) Indemnification. The Business Associate shall indemnify and hold the Covered Entity harmless from and against any and all claims, liabilities, judgments, fines, assessments, penalties, awards and any statutory damages that may be imposed or assessed pursuant to HIPAA, as amended or the

HITECH Act, including, without limitation, attorney's fees, expert witness fees, costs of investigation, litigation or dispute resolution, and costs awarded thereunder, relating to or arising out of any violation by the Business Associate and its agents, including subcontractors, of any obligation of Business Associate and its agents, including subcontractors, under this section of the contract, under HIPAA, the HITECH Act, the Privacy Rule and the Security Rule.

Notice to Executive Branch State Contractors and Prospective State Contractors of Campaign Contribution and Solicitation Limitations

This notice is provided under the authority of Connecticut General Statutes §9-612(g)(2), as amended by P.A. 10-1, and is for the purpose of informing state contractors and prospective state contractors of the following law (italicized words are defined on the reverse side of this page).

CAMPAIGN CONTRIBUTION AND SOLICITATION LIMITATIONS

No *state contractor, prospective state contractor, principal of a state contractor or principal of a prospective state contractor*, with regard to a *state contract* or *state contract solicitation* with or from a state agency in the executive branch or a quasi-public agency or a holder, or principal of a holder of a valid prequalification certificate, shall make a contribution to (i) an exploratory committee or candidate committee established by a candidate for nomination or election to the office of Governor, Lieutenant Governor, Attorney General, State Comptroller, Secretary of the State or State Treasurer, (ii) a political committee authorized to make contributions or expenditures to or for the benefit of such candidates, or (iii) a party committee (which includes town committees).

In addition, no holder or principal of a holder of a valid prequalification certificate, shall make a contribution to (i) an exploratory committee or candidate committee established by a candidate for nomination or election to the office of State senator or State representative, (ii) a political committee authorized to make contributions or expenditures to or for the benefit of such candidates, or (iii) a party committee.

On and after January 1, 2011, no state contractor, prospective state contractor, principal of a state contractor or principal of a prospective state contractor, with regard to a state contract or state contract solicitation with or from a state agency in the executive branch or a quasi-public agency or a holder, or principal of a holder of a valid prequalification certificate, shall **knowingly** *solicit* contributions from the state contractor's or prospective state contractor's employees or from a *subcontractor* or *principals of the subcontractor* on behalf of (i) an exploratory committee or candidate committee established by a candidate for nomination or election to the office of Governor, Lieutenant Governor, Attorney General, State Comptroller, Secretary of the State or State Treasurer, (ii) a political committee authorized to make contributions or expenditures to or for the benefit of such candidates, or (iii) a party committee.

DUTY TO INFORM

State contractors and prospective state contractors are required to inform their principals of the above prohibitions, as applicable, and the possible penalties and other consequences of any violation thereof.

PENALTIES FOR VIOLATIONS

Contributions or solicitations of contributions made in violation of the above prohibitions may result in the following civil and criminal penalties:

Civil penalties—Up to $2,000 or twice the amount of the prohibited contribution, whichever is greater, against a principal or a contractor. Any state contractor or prospective state contractor which fails to make reasonable efforts to comply with the provisions requiring notice to its principals of these prohibitions and the possible consequences of their violations may also be subject to civil penalties of up to $2,000 or twice the amount of the prohibited contributions made by their principals.

Criminal penalties—Any knowing and willful violation of the prohibition is a Class D felony, which may subject the violator to imprisonment of not more than 5 years, or not more than $5,000 in fines, or both.

CONTRACT CONSEQUENCES

In the case of a state contractor, contributions made or solicited in violation of the above prohibitions may resulting the contract being voided.

In the case of a prospective state contractor, contributions made or solicited in violation of the above prohibitions shall result in the contract described in the state contract solicitation not being awarded to the prospective state contractor, unless the State Elections Enforcement Commission determines that mitigating circumstances exist concerning such violation.

The State shall not award any other state contract to anyone found in violation of the above prohibitions for a period of one year after the election for which such contribution is made or solicited, unless the State Elections Enforcement Commission determines that mitigating circumstances exist concerning such violation.
Additional information may be found on the website of the State Elections Enforcement Commission, www.ct.gov/seec. Click on the link to “Lobbyist/Contractor Limitations.”

DEFINITIONS

"State contractor" means a person, business entity or nonprofit organization that enters into a state contract. Such person, business entity or nonprofit organization shall be deemed to be a state contractor until December thirty-first of the year in which such contract terminates. "State contractor" does not include a municipality or any other political subdivision of the state, including any entities or associations duly created by the municipality or political subdivision exclusively amongst themselves to further any purpose authorized by statute or charter, or an employee in the executive or legislative branch of state government or a quasi-public agency, whether in the classified or unclassified service and full or part-time, and only in such person's capacity as a state or quasi-public agency employee.

"Prospective state contractor" means a person, business entity or nonprofit organization that (i) submits a response to a state contract solicitation by the state, a state agency or a quasi-public agency, or a proposal in response to a request for proposals by the state, a state agency or a quasi-public agency, until the contract has been entered into, or (ii) holds a valid prequalification certificate issued by the Commissioner of Administrative Services under section 4a-100. "Prospective state contractor" does not include a municipality or any other political subdivision of the state, including any entities or associations duly created by the municipality or political subdivision exclusively amongst themselves to further any purpose authorized by statute or charter, or an employee in the executive or legislative branch of state government or a quasi-public agency, whether in the classified or unclassified service and full or part-time, and only in such person's capacity as a state or quasi-public agency employee.

"Principal of a state contractor or prospective state contractor" means (i) any individual who is a member of the board of directors of, or has an ownership interest of five per cent or more in, a state contractor or prospective state contractor, which is a business entity, except for an individual who is a member of the board of directors of a nonprofit organization**,** (ii) an individual who is employed by a state contractor or prospective state contractor, which is a business entity, as president, treasurer or executive vice president, (iii) an individual who is the chief executive officer of a state contractor or prospective state contractor, which is not a business entity, or if a state contractor or prospective state contractor has no such officer, then the officer who duly possesses comparable powers and duties, (iv) an officer or an employee of any state contractor or prospective state contractor who has *managerial or discretionary responsibilities with respect to a state contract,* (v) the spouse or a *dependent child* who is eighteen years of age or older of an individual described in this subparagraph, or (vi) a political committee established or controlled by an individual described in this subparagraph or the business entity or nonprofit organization that is the state contractor or prospective state contractor.

"State contract" means an agreement or contract with the state or any state agency or any quasi-public agency, let through a procurement process or otherwise, having a value of fifty thousand dollars or more, or a combination or series of such agreements or contracts having a value of one hundred thousand dollars or more in a calendar year, for (i) the rendition of services, (ii) the furnishing of any goods, material, supplies, equipment or any items of any kind, (iii) the construction, alteration or repair of any public building or public work, (iv) the acquisition, sale or lease of any land or building, (v) a licensing arrangement, or (vi) a grant, loan or loan guarantee. "State contract" does not include any agreement or contract with the state, any state agency or any quasi-public agency that is exclusively federally funded, an education loan, a loan to an individual for other than commercial purposes or any agreement or contract between the state or any state agency and the United States Department of the Navy or the United States Department of Defense.

"State contract solicitation" means a request by a state agency or quasi-public agency, in whatever form issued, including, but not limited to, an invitation to bid, request for proposals, request for information or request for quotes, inviting bids, quotes or other types of submittals, through a competitive procurement process or another process authorized by law waiving competitive procurement.

"Managerial or discretionary responsibilities with respect to a state contract" means having direct, extensive and substantive responsibilities with respect to the negotiation of the state contract and not peripheral, clerical or ministerial responsibilities.

"Dependent child" means a child residing in an individual's household who may legally be claimed as a dependent on the federal income tax of such individual.

"Solicit" means (A) requesting that a contribution be made, (B) participating in any fund-raising activities for a candidate committee, exploratory committee, political committee or party committee, including, but not limited to, forwarding tickets to potential contributors, receiving contributions for transmission to any such committee or bundling contributions, (C) serving as chairperson, treasurer or deputy treasurer of any such committee, or (D) establishing a political committee for the sole purpose of soliciting or receiving contributions for any committee. Solicit does not include: (i) making a contribution that is otherwise permitted by Chapter 155 of the Connecticut General Statutes; (ii) informing any person of a position taken by a candidate for public office or a public official, (iii) notifying the person of any activities of, or contact information for, any candidate for public office; or (iv) serving as a member in any party committee or as an officer of such committee that is not otherwise prohibited in this section.

"Subcontractor" means any person, business entity or nonprofit organization that contracts to perform part or all of the obligations of a state contractor's state contract. Such person, business entity or nonprofit organization shall be deemed to be a subcontractor until December thirty first of the year in which the subcontract terminates. "Subcontractor" does not include (i) a municipality or any other political subdivision of the state, including any entities or associations duly created by the municipality or political subdivision exclusively amongst themselves to further any purpose authorized by statute or charter, or (ii) an employee in the executive or legislative branch of state government or a quasi-public agency, whether in the classified or unclassified service and full or part-time, and only in such person's capacity as a state or quasi-public agency employee.

"Principal of a subcontractor" means (i) any individual who is a member of the board of directors of, or has an ownership interest of five per cent or more in, a subcontractor, which is a business entity, except for an individual who is a member of the board of directors of a nonprofit organization, (ii) an individual who is employed by a subcontractor, which is a business entity, as president, treasurer or executive vice president, (iii) an individual who is the chief executive officer of a subcontractor, which is not a business entity, or if a subcontractor has no such officer, then the officer who duly possesses comparable powers and duties, (iv) an officer or an employee of any subcontractor who has managerial or discretionary responsibilities with respect to a subcontract with a state contractor, (v) the spouse or a dependent child who is eighteen years of age or older of an individual described in this subparagraph, or (vi) a political committee established or controlled by an individual described in this subparagraph or the business entity or nonprofit organization that is the subcontractor.

EXHIBIT F

(federal wage rate package will be inserted here for final executed contract only. Refer to NTC – Federal Wage Determinations)

EXHIBIT G

(state wages will be inserted here)

Minimum Rates and Classifications
for Heavy/Highway Construction

ID#: **H** 22892

Connecticut Department of Labor
Wage and Workplace Standards Division

By virtue of the authority vested in the Labor Commissioner under provisions of Section 31-53 of the General Statutes of Connecticut, as amended, the following are declared to be the prevailing rates and welfare payments and will apply only where the contract is advertised for bid within 20 days of the date on which the rates are established. Any contractor or subcontractor not obligated by agreement to pay to the welfare and pension fund shall pay this amount to each employee as part of his/her hourly wages.

Project Number:

Project Town: Newington

FAP Number: 1093(118)

State Number: 93-200

Project: Rehabilitation Of Bridge Number 04326 Route 175 Over AMTRAK

CLASSIFICATION	Hourly Rate	Benefits
01) Asbestos/Toxic Waste Removal Laborers: Asbestos removal and encapsulation (except its removal from mechanical systems which are not to be scrapped), toxic waste removers, blasters. **See Laborers Group 5 and 7**		
1) Boilermaker	33.79	34% + 8.96
1a) Bricklayer, Cement Masons, Cement Finishers, Plasterers, Stone Masons	33.48	28.76
2) Carpenters, Piledrivermen	32.00	24.42

As of: Monday, November 28, 2016

Project: Rehabilitation Of Bridge Number 04326 Route 175 Over AMTRAK

2a) Diver Tenders	32.00	24.42
3) Divers	40.46	24.42
03a) Millwrights	32.47	24.84
4) Painters: (Bridge Construction) Brush, Roller, Blasting (Sand, Water, etc.), Spray	46.95	20.15
4a) Painters: Brush and Roller	32.02	20.15
4b) Painters: Spray Only	35.02	20.15
4c) Painters: Steel Only	34.02	20.15

As of: Monday, November 28, 2016

Project: Rehabilitation Of Bridge Number 04326 Route 175 Over AMTRAK

4d) Painters: Blast and Spray	35.02	20.15
4e) Painters: Tanks, Tower and Swing	34.02	20.15
5) Electrician (Trade License required: E-1,2 L-5,6 C-5,6 T-1,2 L-1,2 V-1,2,7,8,9)	37.50	25.06+3% of gross wage
6) Ironworkers: Ornamental, Reinforcing, Structural, and Precast Concrete Erection	35.22	31.99 + a
7) Plumbers (Trade License required: (P-1,2,6,7,8,9 J-1,2,3,4 SP-1,2) and Pipefitters (Including HVAC Work) (Trade License required: S-1,2,3,4,5,6,7,8 B-1,2,3,4 D-1,2,3,4 G-1, G-2, G-8, G-9)	40.62	29.71

----LABORERS---- -

8) Group 1: Laborer (Unskilled), Common or General, acetylene burner, concrete specialist	28.55	18.90

As of: Monday, November 28, 2016

Project: Rehabilitation Of Bridge Number 04326 Route 175 Over AMTRAK

9) Group 2: Chain saw operators, fence and guard rail erectors, pneumatic tool operators, powdermen	28.80	18.90
10) Group 3: Pipelayers	29.05	18.90
11) Group 4: Jackhammer/Pavement breaker (handheld); mason tenders (cement/concrete), catch basin builders, asphalt rakers, air track operators, block paver, curb setter and forklift operators	29.05	18.90
12) Group 5: Toxic waste removal (non-mechanical systems)	30.55	18.90
13) Group 6: Blasters	30.30	18.90
Group 7: Asbestos/lead removal, non-mechanical systems (does not include leaded joint pipe)	29.55	18.90
Group 8: Traffic control signalmen	16.00	18.90

As of: Monday, November 28, 2016

Project: Rehabilitation Of Bridge Number 04326 Route 175 Over AMTRAK

Group 9: Hydraulic Drills	29.30	18.90

----LABORERS (TUNNEL CONSTRUCTION, FREE AIR). Shield Drive and Liner Plate Tunnels in Free Air.----

13a) Miners, Motormen, Mucking Machine Operators, Nozzle Men, Grout Men, Shaft & Tunnel Steel & Rodmen, Shield & Erector, Arm Operator, Cable Tenders	32.22	18.90 + a
13b) Brakemen, Trackmen	31.28	18.90 + a

----CLEANING, CONCRETE AND CAULKING TUNNEL----

14) Concrete Workers, Form Movers, and Strippers	31.28	18.90 + a
15) Form Erectors	31.60	18.90 + a

As of: Monday, November 28, 2016

Project: Rehabilitation Of Bridge Number 04326 Route 175 Over AMTRAK

----ROCK SHAFT LINING, CONCRETE, LINING OF SAME AND TUNNEL IN FREE AIR:----

16) Brakemen, Trackmen, Tunnel Laborers, Shaft Laborers	31.28	18.90 + a
17) Laborers Topside, Cage Tenders, Bellman	31.17	18.90 + a
18) Miners	32.22	18.90 + a

----TUNNELS, CAISSON AND CYLINDER WORK IN COMPRESSED AIR: ----

18a) Blaster	38.53	18.90 + a
19) Brakemen, Trackmen, Groutman, Laborers, Outside Lock Tender, Gauge Tenders	38.34	18.90 + a

As of: Monday, November 28, 2016

Project: Rehabilitation Of Bridge Number 04326 Route 175 Over AMTRAK

20) Change House Attendants, Powder Watchmen, Top on Iron Bolts	36.41	18.90 + a
21) Mucking Machine Operator	39.11	18.90 + a
----TRUCK DRIVERS----(*see note below)		
Two axle trucks	28.83	21.39 + a
Three axle trucks; two axle ready mix	28.93	21.39 + a
Three axle ready mix	28.98	21.39 + a
Four axle trucks, heavy duty trailer (up to 40 tons)	29.03	21.39 + a

As of: Monday, November 28, 2016

Project: Rehabilitation Of Bridge Number 04326 Route 175 Over AMTRAK

Four axle ready-mix	29.08	21.39 + a
Heavy duty trailer (40 tons and over)	29.28	21.39 + a
Specialized earth moving equipment other than conventional type on-the road trucks and semi-trailer (including Euclids)	29.08	21.39 + a
----POWER EQUIPMENT OPERATORS----		
Group 1: Crane handling or erecting structural steel or stone, hoisting engineer (2 drums or over), front end loader (7 cubic yards or over), Work Boat 26 ft. & Over, Tunnel Boring Machines. (Trade License Required)	38.55	23.55 + a
Group 2: Cranes (100 ton rate capacity and over); Excavator over 2 cubic yards; Piledriver ($3.00 premium when operator controls hammer); Bauer Drill/Caisson. (Trade License Required)	38.23	23.55 + a
Group 3: Excavator/Backhoe under 2 cubic yards; Cranes (under 100 ton rated capacity), Gradall; Master Mechanic; Hoisting Engineer (all types of equipment where a drum and cable are used to hoist or drag material regardless of motive power of operation), Rubber Tire Excavator (Drott-1085 or similar);Grader Operator; Bulldozer Fine Grade (slopes, shaping, laser or GPS, etc.). (Trade License Required)	37.49	23.55 + a

As of: Monday, November 28, 2016

Project: Rehabilitation Of Bridge Number 04326 Route 175 Over AMTRAK

Group 4: Trenching Machines; Lighter Derrick; Concrete Finishing Machine; CMI Machine or Similar; Koehring Loader (Skooper)	37.10	23.55 + a
Group 5: Specialty Railroad Equipment; Asphalt Paver; Asphalt Spreader; Asphalt Reclaiming Machine; Line Grinder; Concrete Pumps; Drills with Self Contained Power Units; Boring Machine; Post Hole Digger; Auger; Pounder; Well Digger; Milling Machine (over 24" Mandrell)	36.51	23.55 + a
Group 5 continued: Side Boom; Combination Hoe and Loader; Directional Driller.	36.51	23.55 + a
Group 6: Front End Loader (3 up to 7 cubic yards); Bulldozer (rough grade dozer).	36.20	23.55 + a
Group 7: Asphalt Roller; Concrete Saws and Cutters (ride on types); Vermeer Concrete Cutter; Stump Grinder; Scraper; Snooper; Skidder; Milling Machine (24" and Under Mandrel).	35.86	23.55 + a
Group 8: Mechanic, Grease Truck Operator, Hydroblaster, Barrier Mover, Power Stone Spreader; Welder; Work Boat under 26 ft.; Transfer Machine.	35.46	23.55 + a
Group 9: Front End Loader (under 3 cubic yards), Skid Steer Loader regardless of attachments (Bobcat or Similar); Fork Lift, Power Chipper; Landscape Equipment (including hydroseeder).	35.03	23.55 + a

As of: Monday, November 28, 2016

Project: Rehabilitation Of Bridge Number 04326 Route 175 Over AMTRAK

Group 10: Vibratory Hammer, Ice Machine, Diesel and Air Hammer, etc.	32.99	23.55 + a
Group 11: Conveyor, Earth Roller; Power Pavement Breaker (whiphammer), Robot Demolition Equipment.	32.99	23.55 + a
Group 12: Wellpoint Operator.	32.93	23.55 + a
Group 13: Compressor Battery Operator.	32.35	23.55 + a
Group 14: Elevator Operator; Tow Motor Operator (Solid Tire No Rough Terrain).	31.21	23.55 + a
Group 15: Generator Operator; Compressor Operator; Pump Operator; Welding Machine Operator; Heater Operator.	30.80	23.55 + a
Group 16: Maintenance Engineer/Oiler	30.15	23.55 + a

As of: Monday, November 28, 2016

Project: Rehabilitation Of Bridge Number 04326 Route 175 Over AMTRAK

Group 17: Portable asphalt plant operator; portable crusher plant operator; portable concrete plant operator.	34.46	23.55 + a
Group 18: Power Safety Boat; Vacuum Truck; Zim Mixer; Sweeper; (minimum for any job requiring CDL license).	32.04	23.55 + a

**NOTE: SEE BELOW

----LINE CONSTRUCTION----(Railroad Construction and Maintenance)----

20) Lineman, Cable Splicer, Technician	45.43	6.25% + 20.70
21) Heavy Equipment Operator	40.89	6.25% + 18.56
22) Equipment Operator, Tractor Trailer Driver, Material Men	38.62	6.25% + 17.99

As of: Monday, November 28, 2016

Project: Rehabilitation Of Bridge Number 04326 Route 175 Over AMTRAK

23) Driver Groundmen	24.99	6.25% + 11.81
23a) Truck Driver	34.07	6.25% + 16.60
----LINE CONSTRUCTION----		
24) Driver Groundmen	30.92	6.5% + 9.70
25) Groundmen	22.67	6.5% + 6.20
26) Heavy Equipment Operators	37.10	6.5% + 10.70
27) Linemen, Cable Splicers, Dynamite Men	41.22	6.5% + 12.20

As of: Monday, November 28, 2016

Project: Rehabilitation Of Bridge Number 04326 Route 175 Over AMTRAK

28) Material Men, Tractor Trailer Drivers, Equipment Operators	35.04	6.5% + 10.45

As of: Monday, November 28, 2016

Project: Rehabilitation Of Bridge Number 04326 Route 175 Over AMTRAK

Welders: Rate for craft to which welding is incidental.

**Note: Hazardous waste removal work receives additional $1.25 per hour for truck drivers.*

***Note: Hazardous waste premium $3.00 per hour over classified rate*

ALL Cranes: When crane operator is operating equipment that requires a fully licensed crane operator to operate he receives an extra $3.00 premium in addition to the hourly wage rate and benefit contributions:

1) Crane handling or erecting structural steel or stone; hoisting engineer (2 drums or over)

2) Cranes (100 ton rate capacity and over) Bauer Drill/Caisson

3) Cranes (under 100 ton rated capacity)

Crane with 150 ft. boom (including jib) - $1.50 extra
Crane with 200 ft. boom (including jib) - $2.50 extra
Crane with 250 ft. boom (including jib) - $5.00 extra
Crane with 300 ft. boom (including jib) - $7.00 extra
Crane with 400 ft. boom (including jib) - $10.00 extra

All classifications that indicate a percentage of the fringe benefits must be calculated at the percentage rate times the "base hourly rate".

Apprentices duly registered under the Commissioner of Labor's regulations on "Work Training Standards for Apprenticeship and Training Programs" Section 31-51-d-1 to 12, are allowed to be paid the appropriate percentage of the prevailing journeymen hourly base and the full fringe benefit rate, providing the work site ratio shall not be less than one full-time journeyperson instructing and supervising the work of each apprentice in a specific trade.

~~Connecticut General Statute Section 31-55a: Annual Adjustments to wage rates by contractors doing state work ~~

The Prevailing wage rates applicable to this project are subject to annual adjustments each July 1st for the duration of the project.

Each contractor shall pay the annual adjusted prevailing wage rate that is in effect each July 1st, as posted by the Department of Labor.

It is the contractor's responsibility to obtain the annual adjusted prevailing wage rate increases directly from the Department of Labor's website.

The annual adjustments will be posted on the Department of Labor's Web page: www.ct.gov/dol.

The Department of Labor will continue to issue the initial prevailing wage rate schedule to the Contracting Agency for the project.

All subsequent annual adjustments will be posted on our Web Site for contractor access.

Contracting Agencies are under no obligation pursuant to State labor law to pay any increase due to the annual adjustment provision.

As of: Monday, November 28, 2016

Project: Rehabilitation Of Bridge Number 04326 Route 175 Over AMTRAK

Effective October 1, 2005 - Public Act 05-50: any person performing the work of any mechanic, laborer, or worker shall be paid prevailing wage

All Person who perform work ON SITE must be paid prevailing wage for the appropriate mechanic, laborer, or worker classification.

All certified payrolls must list the hours worked and wages paid to All Persons who perform work ON SITE regardless of their ownership i.e.: (Owners, Corporate Officers, LLC Members, Independent Contractors, et. al)

Reporting and payment of wages is required regardless of any contractual relationship alleged to exist between the contractor and such person.

~~Unlisted classifications needed for work not included within the scope of the classifications listed may be added after award only as provided in the labor standards contract clause (29 CFR 5.5 (a) (1) (ii)).

Please direct any questions which you may have pertaining to classification of work and payment of prevailing wages to the Wage and Workplace Standards Division, telephone (860)263-6790.

As of: Monday, November 28, 2016

Connecticut Department of Labor
Wage and Workplace Standards Division
FOOTNOTES

Please Note: If the "Benefits" listed on the schedule for the following occupations includes a letter(s) (+ a or + a+b for instance), refer to the information below.

Benefits to be paid at the appropriate prevailing wage rate for the listed occupation.

If the "Benefits" section for the occupation lists only a dollar amount, disregard the information below.

Bricklayers, Cement Masons, Cement Finishers, Concrete Finishers, Stone Masons
(Building Construction) and
(Residential- Hartford, Middlesex, New Haven, New London and Tolland Counties)

a. Paid Holiday: Employees shall receive 4 hours for Christmas Eve holiday provided the employee works the regularly scheduled day before and after the holiday. Employers may schedule work on Christmas Eve and employees shall receive pay for actual hours worked in addition to holiday pay.

Elevator Constructors: Mechanics

a. Paid Holidays: New Year's Day, Memorial Day, Independence Day, Labor Day, Veterans' Day, Thanksgiving Day, Christmas Day, plus the Friday after Thanksgiving.

b. Vacation: Employer contributes 8% of basic hourly rate for 5 years or more of service or 6% of basic hourly rate for 6 months to 5 years of service as vacation pay credit.

Glaziers

a. Paid Holidays: Labor Day and Christmas Day.

Power Equipment Operators
(Heavy and Highway Construction & Building Construction)

a. Paid Holidays: New Year's Day, Good Friday, Memorial day, Independence Day, Labor Day, Thanksgiving Day and Christmas Day, provided the employee works 3 days during the week in which the holiday falls, if scheduled, and if scheduled, the working day before and the working day after the holiday. Holidays falling on Saturday may be observed on Saturday, or if the employer so elects, on the preceding Friday.

Ironworkers

a. Paid Holiday: Labor Day provided employee has been on the payroll for the 5 consecutive work days prior to Labor Day.

Laborers (Tunnel Construction)

a. Paid Holidays: New Year's Day, Memorial Day, Independence Day, Labor Day, Thanksgiving Day and Christmas Day. No employee shall be eligible for holiday pay when he fails, without cause, to work the regular work day preceding the holiday or the regular work day following the holiday.

Roofers

a. Paid Holidays: July 4th, Labor Day, and Christmas Day provided the employee is employed 15 days prior to the holiday.

Sprinkler Fitters

a. Paid Holidays: Memorial Day, July 4th, Labor Day, Thanksgiving Day and Christmas Day, provided the employee has been in the employment of a contractor 20 working days prior to any such paid holiday.

Truck Drivers

(Heavy and Highway Construction & Building Construction)

a. Paid Holidays: New Year's Day, Memorial Day, Independence Day, Labor Day, Thanksgiving Day, Christmas day, and Good Friday, provided the employee has at least 31 calendar days of service and works the last scheduled day before and the first scheduled day after the holiday, unless excused.

Information Bulletin
Occupational Classifications

The Connecticut Department of Labor has the responsibility to properly determine "job classification" on prevailing wage projects covered under C.G.S. Section 31-53.

Note: This information is intended to provide a sample of some occupational classifications for guidance purposes only. It is not an all-inclusive list of each occupation's duties. This list is being provided only to highlight some areas where a contractor may be unclear regarding the proper classification.

Below are additional clarifications of specific job duties performed for certain classifications:

- **ASBESTOS WORKERS**

  Applies all insulating materials, protective coverings, coatings and finishes to all types of mechanical systems.

- **ASBESTOS INSULATOR**

  Handle, install apply, fabricate, distribute, prepare, alter, repair, dismantle, heat and frost insulation, including penetration and fire stopping work on all penetration fire stop systems.

- **BOILERMAKERS**

  Erects hydro plants, incomplete vessels, steel stacks, storage tanks for water, fuel, etc. Builds incomplete boilers, repairs heat exchanges and steam generators.

- **BRICKLAYERS, CEMENT MASONS, CEMENT FINISHERS, MARBLE MASONS, PLASTERERS, STONE MASONS, PLASTERERS. STONE MASONS, TERRAZZO WORKERS, TILE SETTERS**

  Lays building materials such as brick, structural tile and concrete cinder, glass, gypsum, terra cotta block. Cuts, tools and sets marble, sets stone, finishes concrete, applies decorative steel, aluminum and plastic tile, applies cements, sand, pigment and marble chips to floors, stairways, etc.

- **CARPENTERS, MILLWRIGHTS. PILEDRIVERMEN. LATHERS. RESILEINT FLOOR LAYERS, DOCK BUILDERS, DIKERS, DIVER TENDERS**

  Constructs, erects, installs and repairs structures and fixtures of wood, plywood and wallboard. Installs, assembles, dismantles, moves industrial machinery. Drives piling into ground to provide foundations for structures such as buildings and bridges, retaining walls for earth embankments, such as cofferdams. Fastens wooden, metal or rockboard lath to walls, ceilings and partitions of buildings, acoustical tile layer, concrete form builder. Applies firestopping materials on fire resistive joint systems only. Installation of curtain/window walls only where attached to wood or metal studs. Installation of insulated material of all types whether blown, nailed or attached in other ways to walls, ceilings and floors of buildings. Assembly and installation of modular furniture/furniture systems. Free-standing furniture is not covered. This includes free standing: student chairs, study top desks, book box desks, computer furniture, dictionary stand, atlas stand, wood shelving, two-position information access station, file cabinets, storage cabinets, tables, etc.

- **CLEANING LABORER**

  The clean up of any construction debris and the general cleaning, including sweeping, wash down, mopping, wiping of the construction facility, washing, polishing, dusting, etc., prior to the issuance of a certificate of occupancy falls under the *Labor classification.*

- **DELIVERY PERSONNEL**

  If delivery of supplies/building materials is to one common point and stockpiled there, prevailing wages are not required. If the delivery personnel are involved in the distribution of the material to multiple locations within the construction site then they would have to be paid prevailing wages for the type of work performed: laborer, equipment operator, electrician, ironworker, plumber, etc.

  An example of this would be where delivery of drywall is made to a building and the delivery personnel distribute the drywall from one "stockpile" location to further sub-locations on each floor. Distribution of material around a construction site is the job of a laborer/tradesman and not a delivery personnel.

- **ELECTRICIANS**

  Install, erect, maintenance, alteration or repair of any wire, cable, conduit, etc., which generates, transforms, transmits or uses electrical energy for light, heat, power or other purposes, including the Installation or maintenance of telecommunication, LAN wiring or computer equipment, and low voltage wiring. ***License required per Connecticut General Statutes: E-1,2 L-5,6 C-5,6 T-1,2 L-1,2 V-1,2,7,8,9.**

- **ELEVATOR CONSTRUCTORS**

  Install, erect, maintenance and repair of all types of elevators, escalators, dumb waiters and moving walks. ***License required by Connecticut General Statutes: R-1,2,5,6.**

- **FORK LIFT OPERATOR**

  Laborers Group 4) Mason Tenders - operates forklift solely to assist a mason to a maximum height of nine (9) feet only.

  Power Equipment Operator Group 9 - operates forklift to assist any trade, and to assist a mason to a height over nine (9) feet.

- **GLAZIERS**

  Glazing wood and metal sash, doors, partitions, and 2 story aluminum storefronts. Installs glass windows, skylights, store fronts and display cases or surfaces such as building fronts, interior walls, ceilings and table tops and metal store fronts. Installation of aluminum window walls and curtain walls is the "joint" work of glaziers and ironworkers which requires either a blended rate or equal composite workforce.

- **IRONWORKERS**

  Erection, installation and placement of structural steel, precast concrete, miscellaneous iron, ornamental iron, metal curtain wall, rigging and reinforcing steel. Handling, sorting, and installation of reinforcing steel (rebar). Metal bridge rail (traffic), metal bridge handrail, and decorative security fence installation. Installation of aluminum window walls and curtain walls is the "joint" work of glaziers and ironworkers which requires either a blended rate or equal composite workforce. Insulated metal and insulated composite panels are still installed by the Ironworker.

- **INSULATOR**

  Installing fire stopping systems/materials for "Penetration Firestop Systems": transit to cables, electrical conduits, insulated pipes, sprinkler pipe penetrations, ductwork behind radiation, electrical cable trays, fire rated pipe penetrations, natural polypropylene, HVAC ducts, plumbing bare metal, telephone and communication wires, and boiler room ceilings. Past practice using the applicable licensed trades, Plumber, Sheet Metal, Sprinkler Fitter, and Electrician, is not inconsistent with the Insulator classification and would be permitted.

- **LABORERS**

  Acetylene burners, asphalt rakers, chain saw operators, concrete and power buggy operator, concrete saw operator, fence and guard rail erector (except metal bridge rail (traffic), metal bridge handrail, and decorative security fence installation.), hand operated concrete vibrator operator, mason tenders, pipelayers (installation of storm drainage or sewage lines on the street only), pneumatic drill operator, pneumatic gas and electric drill operator, powermen and wagon drill operator, air track operator, block paver, curb setters, blasters, concrete spreaders.

- **PAINTERS**

  Maintenance, preparation, cleaning, blasting (water and sand, etc.), painting or application of any protective coatings of every description on all bridges and appurtenances of highways, roadways, and railroads. Painting, decorating, hardwood finishing, paper hanging, sign writing, scenic art work and drywall hhg for any and all types of building and residential work.

- **LEAD PAINT REMOVAL**

  Painter's Rate
  1. Removal of lead paint from bridges.
  2. Removal of lead paint as preparation of any surface to be repainted.
  3. Where removal is on a Demolition project prior to reconstruction.

  Laborer's Rate
  1. Removal of lead paint from any surface NOT to be repainted.
  2. Where removal is on a *TOTAL* Demolition project only.

- **PLUMBERS AND PIPEFITTERS**

  Installation, repair, replacement, alteration or maintenance of all plumbing, heating, cooling and piping. ***License required per Connecticut General Statutes: P-1,2,6,7,8,9 J-1,2,3,4 SP-1,2 S-1,2,3,4,5,6,7,8 B-1,2,3,4 D-1,2,3,4.***

- **POWER EQUIPMENT OPERATORS**

  Operates several types of power construction equipment such as compressors, pumps, hoists, derricks, cranes, shovels, tractors, scrapers or motor graders, etc. Repairs and maintains equipment. ***License required, crane operators only, per Connecticut General Statutes.**

- **ROOFERS**

  Covers roofs with composition shingles or sheets, wood shingles, slate or asphalt and gravel to waterproof roofs, including preparation of surface. (tear-off and/or removal of any type of roofing and/or clean-up of any and all areas where a roof is to be relaid)

- **SHEETMETAL WORKERS**

  Fabricate, assembles, installs and repairs sheetmetal products and equipment in such areas as ventilation, air-conditioning, warm air heating, restaurant equipment, architectural sheet metal work, sheetmetal roofing, and aluminum gutters. Fabrication, handling, assembling, erecting, altering, repairing, etc. of coated metal material panels and composite metal material panels when used on building exteriors and interiors as soffits, facia, louvers, partitions, wall panel siding, canopies, cornice, column covers, awnings, beam covers, cladding, sun shades, lighting troughs, spires, ornamental roofing, metal ceilings, mansards, copings, ornamental and ventilation hoods, vertical and horizontal siding panels, trim, etc. The sheet metal classification also applies to the vast variety of coated metal material panels and composite metal material panels that have evolved over the years as an alternative to conventional ferrous and non-ferrous metals like steel, iron, tin, copper, brass, bronze, aluminum, etc. Insulated metal and insulated composite panels are still installed by the Iron Worker. Fabrication, handling, assembling, erecting, altering, repairing, etc. of architectural metal roof, standing seam roof, composite metal roof, metal and composite bathroom/toilet partitions, aluminum gutters, metal and composite lockers and shelving, kitchen equipment, and walk-in coolers.

- **SPRINKLER FITTERS**

  Installation, alteration, maintenance and repair of fire protection sprinkler systems. ***License required per Connecticut General Statutes: F-1,2,3,4.**

- **TILE MARBLE AND TERRAZZO FINISHERS**

  Assists and tends the tile setter, marble mason and terrazzo worker in the performance of their duties.

- **TRUCK DRIVERS**

Definitions:

1) "Site of the work" (29 Code of Federal Regulations (CFR) 5.2(l)(b) is the physical place or places where the building or work called for in the contract will remain and any other site where a significant portion of the building or work is constructed, provided that such site is established specifically for the performance of the contact or project;

(a) Except as provided in paragraph (l) (3) of this section, job headquarters, tool yards, batch plants, borrow pits, etc. are part of the "site of the work"; provided they are dedicated exclusively, or nearly so, to the performance of the contract or project, and provided they are adjacent to "the site of work" as defined in paragraph (e)(1) of this section;

(b) Not included in the "site of the work" are permanent home offices, branch plant establishments, fabrication plants, tool yards etc, of a contractor or subcontractor whose location and continuance in operation are determined wholly without regard to a particular State or political subdivision contract or uncertain and indefinite periods of time involved of a few seconds or minutes duration and where the failure to count such time is due to consideration justified by industrial realities (29 CFR 785.47)

2) "Engaged to wait" is waiting time that belongs to and is controlled by the employer which is an integral part of the job and is therefore compensable as hours worked. (29 CFR 785.15)

3) "Waiting to be engaged" is waiting time that an employee can use effectively for their own purpose and is not compensable as hours worked. (29 CFR 785.16)

4) "De Minimus" is a rule that recognizes that unsubstantial or insignificant periods of time which cannot as a practical administrative matter be precisely recorded for payroll purposes, may be disregarded. This rule applies only where there are uncertain and indefinite periods of time involved of a short duration and where the failure to count such time is due to consideration justified by worksite realities. For example, with respect to truck drivers on prevailing wage sites, this is typically less than 15 minutes at a time.

Coverage of Truck Drivers on State or Political subdivision Prevailing Wage Projects

Truck drivers <u>are covered</u> for payroll purposes under the following conditions:

- Truck Drivers for time spent working on the site of the work.

- Truck Drivers for time spent loading and/or unloading materials and supplies on the site of the work, if such time is not de minimus

- Truck drivers transporting materials or supplies between a facility that is deemed part of the site of the work and the actual construction site.

- Truck drivers transporting portions of the building or work between a site established specifically for the performance of the contract or project where a significant portion of such building or work is constructed and the physical places where the building or work outlined in the contract will remain.

For example: Truck drivers delivering asphalt are covered under prevailing wage while" engaged to wait" on the site and when directly involved in the paving operation, provided the total time is not "de minimus"

Truck Drivers <u>are not</u> covered in the following instances:

- Material delivery truck drivers while off "the site of the work"

- Truck Drivers traveling between a prevailing wage job and a commercial supply facility while they are off the "site of the work"

- Truck drivers whose time spent on the "site of the work" is de minimus, such as under 15 minutes at a time, merely to drop off materials or supplies, including asphalt.

These guidelines are similar to U.S. Labor Department policies. The application of these guidelines may be subject to review based on factual considerations on a case by case basis.

For example:

- Material men and deliverymen are not covered under prevailing wage as long as they are not directly involved in the construction process. If, they unload the material, they would then be covered by prevailing wage for the classification they are performing work in: laborer, equipment operator, etc.
- Hauling material off site is not covered provided they are not dumping it at a location outlined above.
- Driving a truck on site and moving equipment or materials on site would be considered covered work, as this is part of the construction process.

Any questions regarding the proper classification should be directed to:
Public Contract Compliance Unit
Wage and Workplace Standards Division
Connecticut Department of Labor
200 Folly Brook Blvd, Wethersfield, CT 06109
(860) 263-6543

Statute 31-55a

Last Updated: June 02, 2008

- Special Notice -

To All State and Political Subdivisions,Their Agents, and Contractors

Connecticut General Statute 31-55a - Annual adjustments to wage rates by contractors doing state work.

Each contractor that is awarded a contract on or after October 1, 2002, for (1) the construction of a state highway or bridge that falls under the provisions of section 31-54 of the general statutes, or (2) the construction, remodeling, refinishing, refurbishing, rehabilitation, alteration or repair of any public works project that falls under the provisions of section 31-53 of the general statutes shall contact the Labor Commissioner on or before July first of each year, for the duration of such contract, to ascertain the prevailing rate of wages on an hourly basis and the amount of payment or contributions paid or payable on behalf of each mechanic, laborer or worker employed upon the work contracted to be done, and shall make any necessary adjustments to such prevailing rate of wages and such payment or contributions paid or payable on behalf of each such employee, effective each July first.

- The prevailing wage rates applicable to any contract or subcontract awarded on or after October 1, 2002 are subject to annual adjustments each July 1st for the duration of any project which was originally advertised for bids on or after October 1, 2002.
- Each contractor affected by the above requirement shall pay the annual adjusted prevailing wage rate that is in effect each July 1st, as posted by the Department of Labor.
- It is the ***contractor's*** responsibility to obtain the annual adjusted prevailing wage rate increases directly from the Department of Labor's Web Site. The annual adjustments will be posted on the Department of Labor Web page: www.ctdol.state.ct.us. For those without internet access, please contact the division listed below.
- The Department of Labor will continue to issue the initial prevailing wage rate schedule to the Contracting Agency for the project. All subsequent annual adjustments will be posted on our Web Site for contractor access.

Any questions should be directed to the Contract Compliance Unit, Wage and Workplace

Standards Division, Connecticut Department of Labor, 200 Folly Brook Blvd., Wethersfield, CT 06109 at (860)263-6790.

Workplace Laws

Published by the Connecticut Department of Labor, Project Management Office

November 29, 2006

Notice

To All Mason Contractors and Interested Parties Regarding Construction Pursuant to Section 31-53 of the Connecticut General Statutes (Prevailing Wage)

The Connecticut Labor Department Wage and Workplace Standards Division is empowered to enforce the prevailing wage rates on projects covered by the above referenced statute.

Over the past few years the Division has withheld enforcement of the rate in effect for workers who operate a forklift on a prevailing wage rate project due to a potential jurisdictional dispute.

The rate listed in the schedules and in our Occupational Bulletin (see enclosed) has been as follows:

Forklift Operator:

- **Laborers (Group 4) Mason Tenders -** operates forklift solely to assist a mason to a maximum height of nine feet only.

- **Power Equipment Operator (Group 9) -** operates forklift to assist any trade and to assist a mason to a height over nine feet.

The U.S. Labor Department conducted a survey of rates in Connecticut but it has not been published and the rate in effect remains as outlined in the above Occupational Bulletin.

Since this is a classification matter and not one of jurisdiction, effective January 1, 2007 the Connecticut Labor Department will enforce the rate on each schedule in accordance with our statutory authority.

Your cooperation in filing appropriate and accurate certified payrolls is appreciated.

Informational Bulletin

THE 10-HOUR OSHA CONSTRUCTION SAFETY AND HEALTH COURSE

(applicable to public building contracts entered into *on or after July 1, 2007,* where the total cost of all work to be performed is at least $100,000)

(1) This requirement was created by Public Act No. 06-175, which is codified in Section 31-53b of the Connecticut General Statutes (pertaining to the prevailing wage statutes);

(2) The course is required for public building construction contracts (projects funded in whole or in part by the state or any political subdivision of the state) entered into on or after July 1, 2007;

(3) It is required of private employees (not state or municipal employees) and apprentices who perform manual labor for a general contractor or subcontractor on a public building project where the total cost of all work to be performed is at least $100,000;

(4) The ten-hour construction course pertains to the ten-hour Outreach Course conducted in accordance with federal OSHA Training Institute standards, and, for telecommunications workers, a ten-hour training course conducted in accordance with federal OSHA standard, 29 CFR 1910.268;

(5) The internet website for the federal OSHA Training Institute is http://www.osha.gov/fso/ote/training/edcenters/fact_sheet.html;

(6) The statutory language leaves it to the contractor and its employees to determine who pays for the cost of the ten-hour Outreach Course;

(7) Within 30 days of receiving a contract award, a general contractor must furnish proof to the Labor Commissioner that all employees and apprentices performing manual labor on the project will have completed such a course;

(8) Proof of completion may be demonstrated through either: (a) the presentation of a *bona fide* student course completion card issued by the federal OSHA Training Institute; *or* (2) the presentation of documentation provided to an employee by a trainer certified by the Institute pending the actual issuance of the completion card;

(9) Any card with an issuance date more than 5 years prior to the commencement date of the construction project shall not constitute proof of compliance;

(10) Each employer shall affix a copy of the construction safety course completion card to the certified payroll submitted to the contracting agency in accordance with Conn. Gen. Stat. § 31-53(f) on which such employee's name first appears;

(11) Any employee found to be in non-compliance shall be subject to removal from the worksite if such employee does not provide satisfactory proof of course completion to the Labor Commissioner by the fifteenth day after the date the employee is determined to be in noncompliance;

(12) Any such employee who is determined to be in noncompliance may continue to work on a public building construction project for a maximum of fourteen consecutive calendar days while bringing his or her status into compliance;

(13) The Labor Commissioner may make complaint to the prosecuting authorities regarding any employer or agent of the employer, or officer or agent of the corporation who files a false certified payroll with respect to the status of an employee who is performing manual labor on a public building construction project;

(14) The statute provides the minimum standards required for the completion of a safety course by manual laborers on public construction contracts; any contractor can exceed these minimum requirements; and

(15) Regulations clarifying the statute are currently in the regulatory process, and shall be posted on the CTDOL website as soon as they are adopted in final form.

(16) Any questions regarding this statute may be directed to the Wage and Workplace Standards Division of the Connecticut Labor Department via the internet website of http://www.ctdol.state.ct.us/wgwkstnd/wgemenu.htm; or by telephone at (860)263-6790.

THE ABOVE INFORMATION IS PROVIDED EXCLUSIVELY AS AN EDUCATIONAL RESOURCE, AND IS NOT INTENDED AS A SUBSTITUTE FOR LEGAL INTERPRETATIONS WHICH MAY ULTMATELY ARISE CONCERNIG THE CONSTRUCTION OF THE STATUTE OR THE REGULATIONS.

Sec. 31-53b. **Construction safety and health course**. **Proof of completion required for employees on public building projects. Enforcement. Regulations**. (a) Each contract entered into on or after July 1, 2007, for the construction, remodeling, refinishing, refurbishing, rehabilitation, alteration or repair of any public building project by the state or any of its agents, or by an political subdivision of the state or any of its agents, where the total cost of all work to be performed by all contractors and subcontractors in connection with the contract is at least one hundred thousand dollars, shall contain a provision requiring that, not later than thirty days after the date such contract is awarded, each contractor furnish proof to the Labor Commissioner that all employees performing manual labor on or in such public building, pursuant to such contract, have completed a course of at least ten hours in duration in construction safety and health approved by the federal Occupational Safety and Health Administration or, in the case of telecommunications employees, have completed at least ten hours of training in accordance with 29 CFR 1910.268.

(b) Any employee required to complete a construction safety and health course required under subsection (a) of this section who has not completed the course shall be subject to removal from the worksite if the employee does not provide documentation of having completed such course by the fifteenth day after the date the employee is found to be in noncompliance. The Labor Commissioner or said commissioner's designee shall enforce this section.

(c) Not later than January 1, 2007, the Labor Commissioner shall adopt regulations, in accordance with the provisions of chapter 54, to implement the provisions of subsections (a) and (b) of this section. Such regulations shall require that the ten-hour construction safety and health courses required under subsection (a) of this section be conducted in accordance with federal Occupational Safety and Health Administration Training Institute standards, or in accordance with 29 CFR 1910.268, as appropriate. The Labor Commissioner shall accept as sufficient proof of compliance with the provisions of subsection (a) or (b) of this section a student course completion card issued by the federal Occupational Safety and Health Administration Training Institute, or such other proof of compliance said commissioner deems appropriate, dated no earlier than five years before the commencement date of such public works project.

(d) For the purposes of this section, "public building" means a structure, paid for in whole or in part with state funds, within a roof and within exterior walls or fire walls, designed for the housing, shelter, enclosure and support or employment of people, animals or property of any kind, including, but not limited to, sewage treatment plants and water treatment plants, "Public building" does not include site work, roads or bridges, rail lines, parking lots or underground water, sewer or drainage systems including pump houses or other utility systems.

CONNECTICUT DEPARTMENT OF LABOR
WAGE AND WORKPLACE STANDARDS DIVISION

CONTRACTORS WAGE CERTIFICATION FORM

I,_____of _____
Officer, Owner, Authorized Rep. Company Name

do hereby certify that the _____
Company Name

_____
Street

_____
City

and all of its subcontractors will pay all workers on the

_____
Project Name and Number

_____
Street and City

the wages as listed in the schedule of prevailing rates required for such project (a copy of which is attached hereto).

_____
Signed

Subscribed and sworn to before me this _____ day of _____,

_____
Notary Public

☞ Return to:

Connecticut Department of Labor
Wage & Workplace Standards Division
200 Folly Brook Blvd.
Wethersfield, CT 06109