B.P.R. REGION NO.	STATE	TOWN	FED. AID PROJ. NO.	PROJ. NO.	YEAR	ROUTE NO.	STREET NO.	SHEETS
1	CONN.	NEWINGTON	M-MG-1740(1)	88-59	1976	175	1	111

FORM NO. 1

CONNECTICUT DEPARTMENT OF TRANSPORTATION

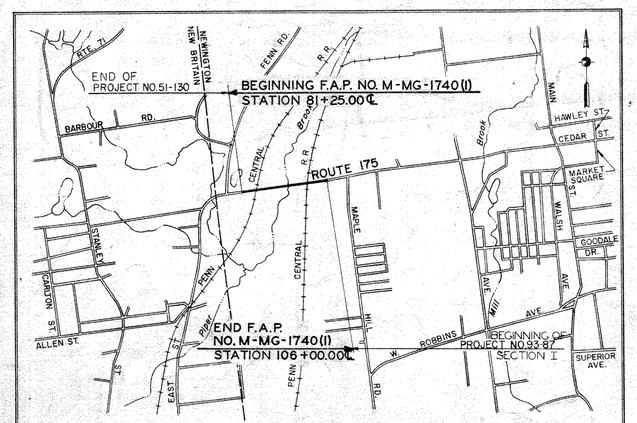

LOCATION PLAN

SCALE IN FEET
1000 0 2000 4000

LEGEND
Construction Of Project No. 88-59

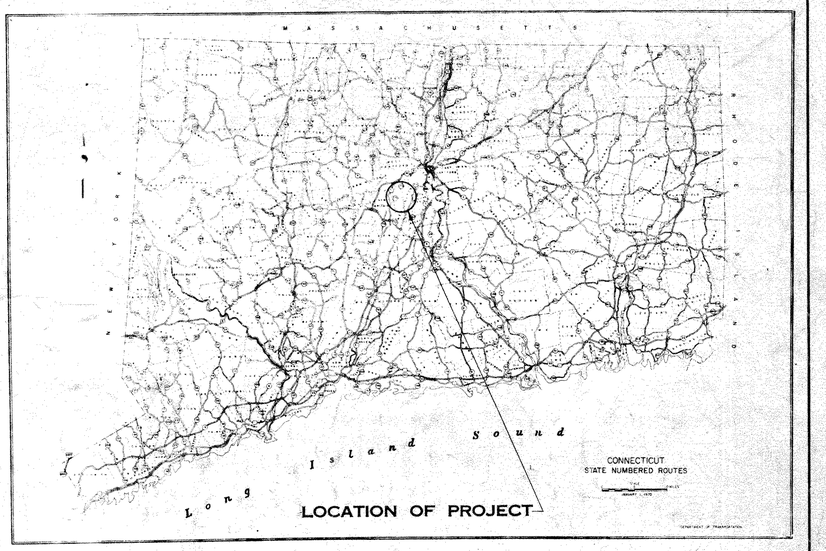

PLAN
FOR
RECONSTRUCTION OF ROUTE 175
IN THE TOWN OF
NEWINGTON

FROM STA. 81+25.00 TO STA. 106+00.00

LENGTH 2,475.00 FT.

HIGHWAY DESIGN SCALES
PLAN 1 IN. = 40 FT.
PROFILE HOR. 1 IN. = 40 FT. VERT. 1 IN. = 4 FT.
CROSS SECTIONS 1 IN. = 5 FT.
1 IN. = 10 FT.

OTHER SCALES AS NOTED

FEDERAL AID URBAN SYSTEMS

TO BE MAINTAINED BY THE STATE

FEDERAL AID PROJECT NO. M-MG-1740(1)

1974 SPECIFICATIONS, FORM 811, INCLUDING SUPPLEMENT THERETO DATED NOVEMBER 1977 GOVERN ALL ELEVATIONS ON THIS PROJECT BASED ON U.S.C. & G.S. DATUM

TOWN NO. 88
PROJECT NO. 59

NOTE: ANY REFERENCE MADE TO THE PENN CENTRAL TRANSPORTATION COMPANY (WATERBURY LINE) SHALL BE CONSTRUED TO MEAN CONSOLIDATED RAIL CORPORATION.

ANY REFERENCE MADE TO THE PENN CENTRAL TRANSPORTATION COMPANY (NEW HAVEN LINE) SHALL BE CONSTRUED TO MEAN NATIONAL RAILROAD PASSENGER CORPORATION

WHEREVER FEDERAL AID PROJECT NO. M-MG-1740(1) APPEARS ON THESE PLANS IT SHALL BE CONSTRUED TO READ MG-1740(1).

Date	Sheet Nos	Reason	By Whom
6/13/79	23-A, 24-A, 106-A	Change Order	B.J.S.

STANDARD CONVENTIONS

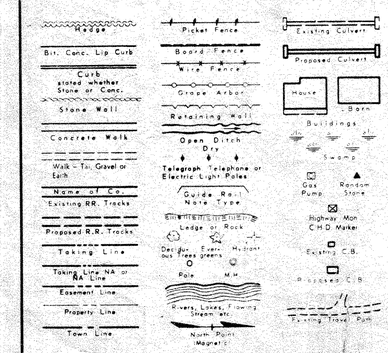

LIST OF DRAWINGS

SHEET NO.	TITLE	DWG. NO.	TITLE	F.H.W.A. APPROVAL DATE
			STANDARD DRAWINGS	
1	TITLE SHEET	220F	METAL BEAM RAIL (TYPE R-I)	6-22-73
2	INDEX PLAN, PROFILE AND TURF ESTABLISHMENT	220I	OBJECT MARKER	
3-5	DETAILED ESTIMATE SHEETS	221G	TYPE "D", "D-G" & "L" ENDWALLS	3-11-70
6	TYPICAL ROADWAY SECTIONS	221J	METAL AND REINFORCED CONCRETE CULVERT END	6-20-68
7-12	MISCELLANEOUS DETAILS	222C	CURBING	11-16-66
13	TEMPORARY ILLUMINATION PLANS-DETOUR "B"	222D	SIDEWALKS AND DRIVES	3-22-72
14-28	40 SCALE PLAN AND PROFILE SHEETS	507A	MANHOLE, FRAME AND COVER	8-30-77
29-75	BRIDGE SHEETS	226A	A.C.C.M. PIPE INSTALLATIONS IN EARTH AND ROCK SLOPE	10-13-65
76-90	TRAFFIC CONTROL PLAN AND DETAILS	228C	TYPE "C-L" CATCH BASIN AND DROP INLET	2-18-76
91	TRAFFIC CONTROL SIGNING FOR DETOUR "B"	228D	STEEL FRAME AND GRATE - TYPE A FOR TYPE "C, C-G AND C-L" CATCH BASIN AND DROP INLET	2-25-76
92-111	CROSS SECTION SHEETS			
A1-A2	HARTFORD ELECTRIC LIGHT COMPANY	228E	TYPE "C" CATCH BASIN AND DROP INLET	2-18-76
B-1	CITY OF NEW BRITAIN - WATER	228G	TYPE "C-L" CATCH BASIN, DOUBLE GRATE - TYPE I AND II	10-1-75
C-1-C-4	CONNECTICUT NATURAL GAS	711A	FIGURES FOR DATES ON BRIDGE PARAPETS	7-28-66
D-1, D-2	CONNECTICUT LIGHT AND POWER	910A	METAL BEAM RAIL (TYPE R-B) AND (TYPE MD-B)	10-14-75
E-1	SOUTHERN NEW ENGLAND TELEPHONE COMPANY	925A	PAVEMENT FOR RAILING	4-22-76
F-1	METROPOLITAN DISTRICT WATER DIVISION	720B	STANDARD SIGNS FOR MAINTENANCE, CONSTRUCTION AND PERMIT OPERATIONS	
B-3	TEMPORRRY NOISE BARRIER	249E	FABRIC REINFORCEMENT FOR 8" & 9" CONC. PAVEMENT	12-17-64

ASSUMED DESIGN SPEED: 45 M.P.H.
ANTICIPATED A.D.T. IN 1990 - 15,600
ANTICIPATED D.D.H.V. IN 1990 - 900
DIRECTIONAL
C.H.D. CLASSIFICATION URBAN STREET

CONSTRUCTION STARTED — JULY 17, 1978
CONSTRUCTION COMPLETED — APRIL 7, 1981
REVISIONS PLOTTED BY P. MISSELWITZ — MARCH 31, 1983
REVISED PLANS CHECKED BY A. GLENN — MARCH 31, 1983

NOTE:

These Plans Have Been Prepared By CHARLES A. MAGUIRE & ASSOC. INC., ENGINEERS, Except That, Sheets Indentified As Sheets A-1 thru F-1 and Appended to These Plans Have Been Prepared By The Utility Owners Identified Thereon. The Undersigned Hereby Disclaims All Responsibility For The Accuracy Of Data Shown on The Above Mentioned Sheets, Except That He Has Reviewed Them For General Coordination With The Plans Prepared By Him.

THE TOTAL NUMBER OF SHEETS IS 126, WHICH INCLUDE SHEET NUMBERS:
3-1, 4-1, 8-1, 8-2, 8-3, 8-4 AND 19-1
75-1 THRU 75-5
107-1 THRU 107-3
111-1 AND 111-2
SHEET NUMBERS 48 AND 62 HAVE BEEN DELETED FROM THE CONTRACT.

THIS SHEET NOT CORRECTED

DESIGNED BY
CHARLES A. MAGUIRE & ASSOC. INC.
ENGINEERS
Per. Vincent M. Cangiano
CONN. PROF. ENG. REG. NO. 4150
SUBMITTED JANUARY 5, 1978
Engineer Of Highway Design
APPROVAL RECOMMENDED JANUARY 5, 1978
Chief Of Design (C.E.)
APPROVED JANUARY 6, 1978
Manager Of Design

U.S. DEPARTMENT OF TRANSPORTATION
FEDERAL HIGHWAY ADMINISTRATION
APPROVED
DIVISION ADMINISTRATOR DATE

88 59

474 01

PUB. ROAD DIV. NO.	STATE	TOWN	FED. AID PROJ. NO.	PROJ. NO.	YEAR	ROUTE NO.	SHEET NO.	TOTAL SHEETS
1	CONN.	NEWINGTON	M-MG-1740(1)	88-59	1976	175	2	11

RECONSTRUCTION OF ROUTE NO. 175

HORIZ. SCALE IN FEET: 400 200 0 400

VERT. SCALE IN FEET: 40 20 0 40

INDEX PLAN AND TURF ESTABLISHMENT

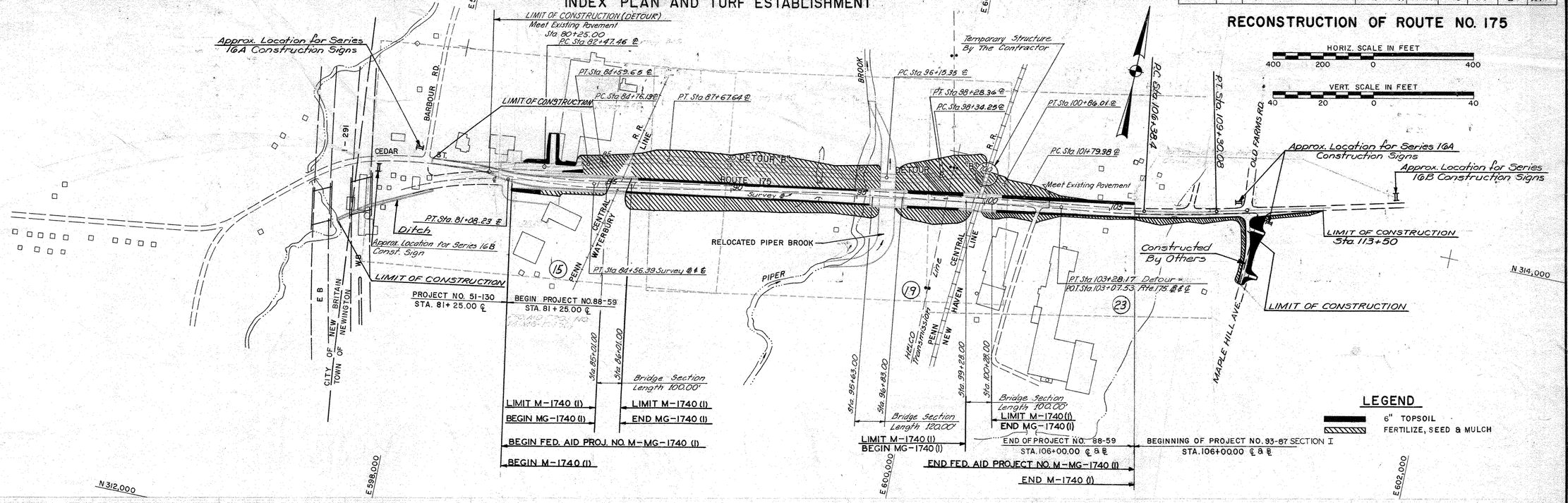

INDEX PROFILE

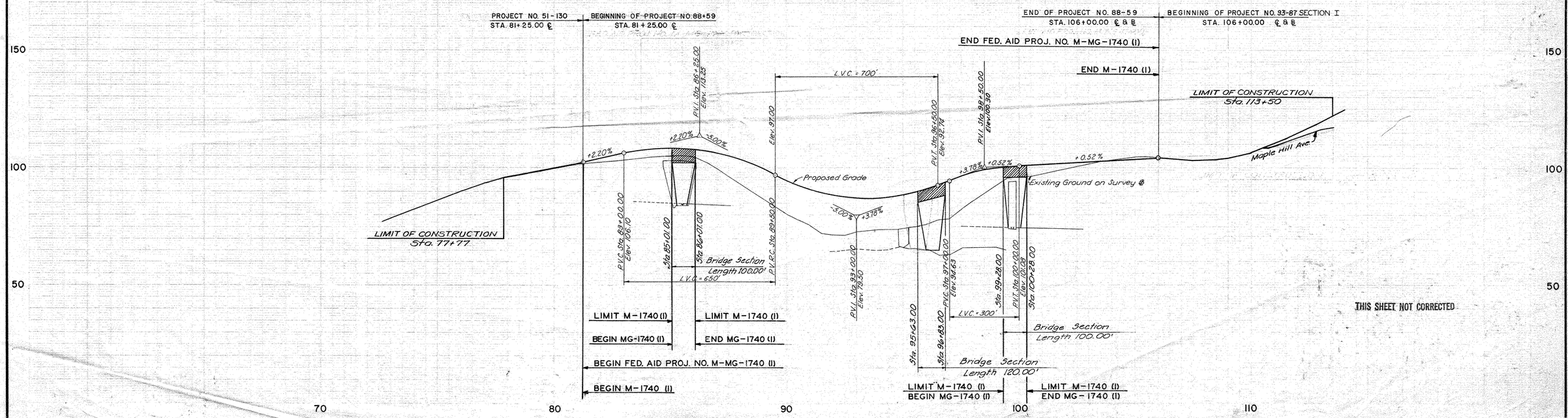

THIS SHEET NOT CORRECTED

88 59 1 474 01 2 9

FORM NO. ENG. 15 ED. 11-62

F.H.W.A. REGION NO.	STATE	TOWN	FED. AID PROJ. NO.	PROJ. NO.	YEAR	ROUTE NO.	SHEET NO.	TOTAL SHEETS
1	CONN.	NEWINGTON	BR-118-(7)210(7)	88-59	1976	175	63	111

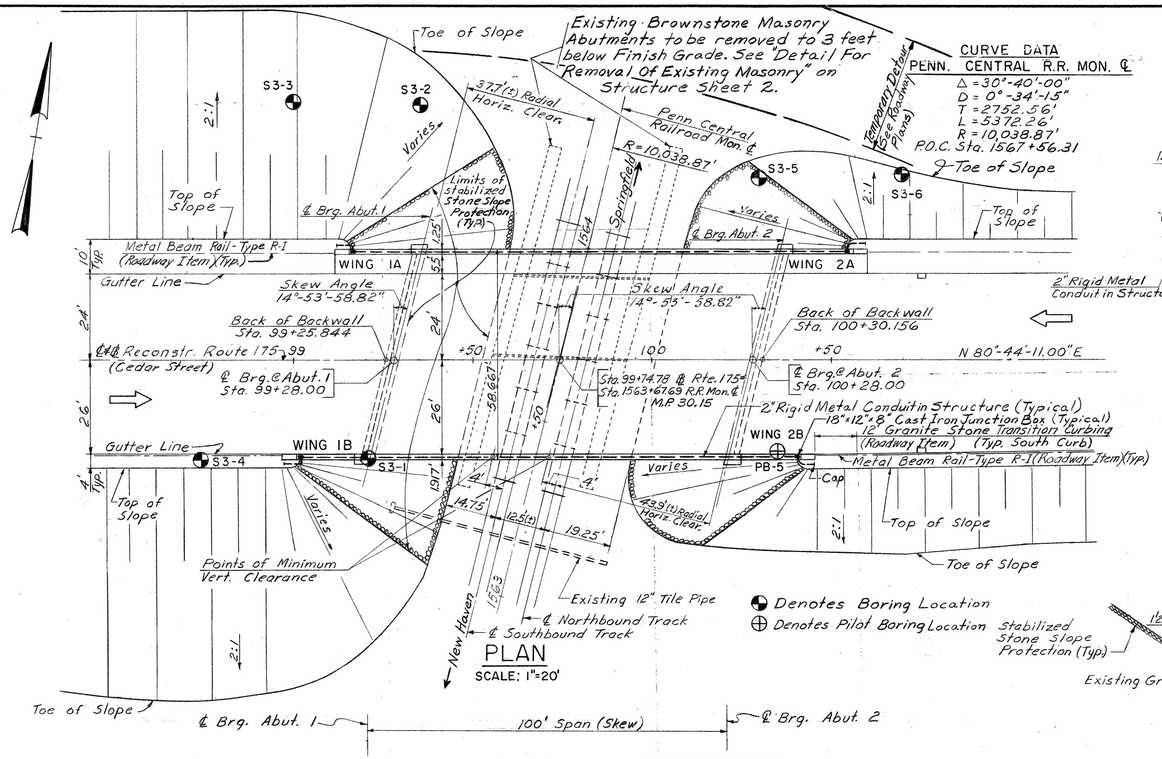

PLAN
SCALE: 1"=20'

ELEVATION
SCALE: 1"=20'

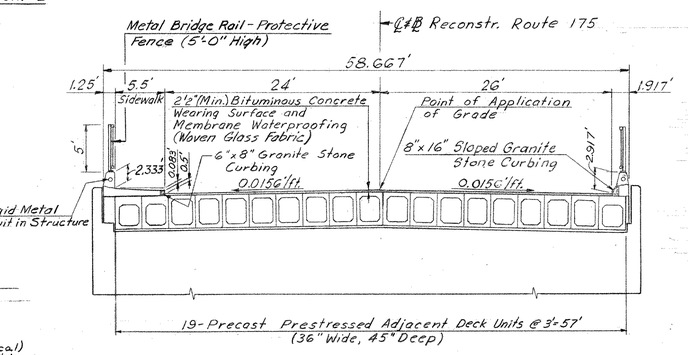

TYPICAL BRIDGE SECTION
SCALE: 1/8"=1'-0"

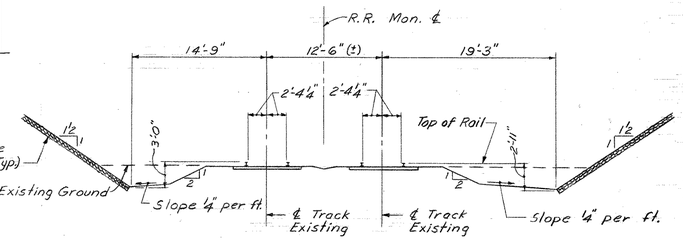

PENN CENTRAL R.R.
SECTION (LOOKING NORTH)
SCALE: 1/8"=1'-0"

GENERAL NOTES

SPECIFICATIONS: Connecticut Department of Transportation Form 811 (1974), Interim Specifications and Special Provisions.

DESIGN SPECIFICATIONS: Standard Specifications for Highway Bridges (AASHO-1969), with the interim specifications up to and including (1972), as supplemented by the Connecticut Department of Transportation Bridge Manual (1964).

ALLOWABLE DESIGN STRESSES:
Class "A" and Class "C" Concrete: fc = 1,200 psi
Reinforcement (AG15 Grade 40): fs (tensile) = 20,000 psi
For Precast Prestressed Deck Units, see Structure Sheet 8.

LIVE LOAD: HS 20-44

FUTURE PAVING ALLOWANCE: None

CLASS "A" CONCRETE: Class "A" Concrete shall be used for the entire substructure and parapets of the U-Type Wings.

CLASS "C" CONCRETE: Class "C" Concrete shall be used on the superstructure for sidewalk and parapets.

JOINT SEAL: See Special Provisions.

PARAFFIN: The cost of furnishing and applying paraffin is included in the item for Class "C" Concrete.

EXPOSED EDGES: Exposed edges shall be beveled 1"x1" unless dimensioned otherwise.

FOUNDATION PRESSURES: The various Group Loadings noted on the substructure plan sheets refer to the Group Loads as given in the AASHO Standard Specifications for Highway Bridges.

CONSTRUCTION JOINTS: Construction joints, other than those shown on the plans, will not be permitted without prior approval of the Engineer.

DIMENSIONS: Dimensions in decimals are shown to three decimal places. Omitted digits to the right of the decimal point or whole number are to be assumed as zeros.

TABLE OF QUANTITIES

ITEM	UNIT	QUANTITY
Structure Excavation - Earth (Complete)	C.Y.	1,860
Structure Excavation - Rock (Complete)	C.Y.	80
Pervious Structure Backfill	C.Y.	1,400
Compacted Gravel Fill	C.Y.	310
Cutting and Sealing Joints in Bit. Concrete Overlay	L.F.	104
Bituminous Concrete Wearing Surface	Ton	115
Removal of Superstructure at Sta. 99+75	L.S.	—
Prestressed Deck Units (36"x 45")	L.F.	1,930
Elastomeric Bearing Pads	C.I.	15,000
Class "A" Concrete	C.Y.	518
Class "C" Concrete	C.Y.	48
1" Preformed Exp. Joint Filler for Bridges	S.F.	9
½" Preformed Exp. Joint Filler for Bridges	S.F.	110
3" Elastomeric Compression Seal	L.F.	21
Deformed Steel Bars	LB.	44,000
6" ACCM Pipe	L.F.	115
Membrane Waterproofing (Woven Glass Fabric)	S.Y.	622
Dampproofing	S.Y.	340
Bagged Stone	C.F.	96
Stabilized Stone Slope Protection	S.Y.	700
6"x 8" Granite Stone Curbing for Bridges	L.F.	105
8"x 16" Sloped Granite Stone Curbing for Bridges	L.F.	145
Protective Compound for Bridges	S.Y.	160
Metal Bridge Rail-Protective Fence (5'-0" High)	L.F.	282
Removal of Existing Masonry	C.Y.	1,100
2" Rigid Metal Conduit in Structure	L.F.	306
18"x 12"x 8" Cast Iron Junction Box	Ea.	4
1" Closed Cell Elastomer	C.I	26,000

CONCRETE DISTRIBUTION

ITEM	UNIT	QUANTITY
SUPERSTRUCTURE	C.Y.	48
SUBSTRUCTURE	C.Y.	323
FOOTINGS	C.Y.	195
TOTAL	C.Y.	566

INSPECTION OF FIELD WELDS

METHOD	UNIT	QUANTITY
ULTRASONIC	IN.	0
MAGNETIC PARTICLE	L.F.	0
RADIOGRAPHIC OR ULTRASONIC	IN.	0

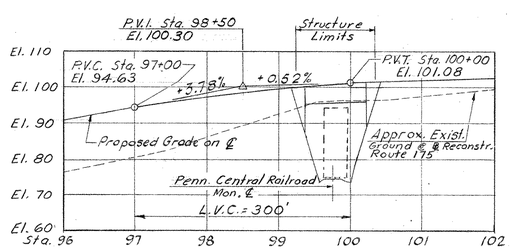

RECONSTRUCTION OF ROUTE 175
SCALE: HORIZ. 1"=100'
VERT. 1"=20'

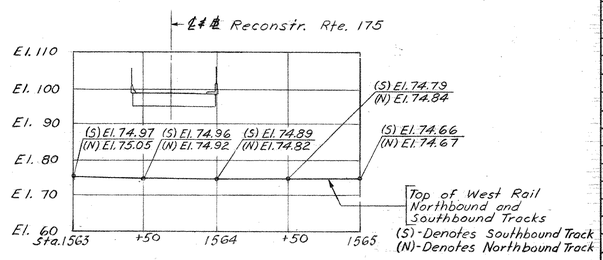

PENN CENTRAL R.R. (NEW HAVEN LINE)
SCALE: HORIZ. 1"=50'
VERT. 1"=20'

PROFILES

THE INFORMATION, INCLUDING ESTIMATED QUANTITIES OF WORK SHOWN ON THESE SHEETS IS BASED ON LIMITED INVESTIGATIONS BY THE STATE AND IS IN NO WAY WARRANTED TO INDICATE THE TRUE CONDITIONS OR ACTUAL QUANTITIES OR DISTRIBUTION OF QUANTITIES OF WORK WHICH WILL BE REQUIRED.

NO.	DATE	DESCRIPTION

REVISIONS

THIS SHEET NOT CORRECTED

CONNECTICUT
DEPARTMENT OF TRANSPORTATION
BUREAU OF HIGHWAYS

NEWINGTON

RECONSTRUCTION OF ROUTE 175
OVER
PENN CENTRAL R.R. (NEW HAVEN LINE)

GENERAL PLAN

ENGINEER C.E. MAGUIRE, INC.
APPROVED Joseph A. Yonuc DATE 9-27-1973
DRAFTSMAN P.Z.J. CHECKER G.S.W. DESIGNER G.S.W. & G.C.C.
STRUCTURE NO. 88-59-3 STRUCTURE SHEET 1 of 12

ANDREW T. JOHNSON CO., INC. 944

88 59

474 01

63

FORM NO. ENG. 15 ED. 11-62

F.H.W.A. REGION NO.	STATE	TOWN	FED. AID PROJ. NO.	PROJ. NO.	YEAR	ROUTE NO.	SHEET NO.	TOTAL SHEETS
1	CONN.	NEWINGTON	BF-NHL V240(7)	88-59	1976	175	69	111

S3-1

RECONSTR. ROUTE 175 STA. 99+20
OFFSET 27' RT.
N 313,790
E 600,065

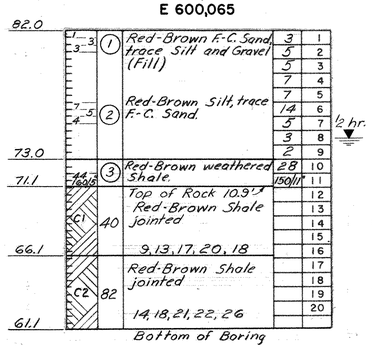

S3-2

RECONSTR. ROUTE 175 STA. 99+35
OFFSET 71' LT.
N 313,889
E 600,064

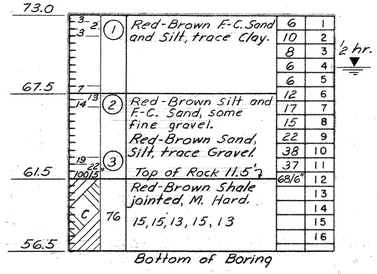

S3-3

RECONSTR. ROUTE 175 STA. 99+00
OFFSET 72' LT.
N 313,885
E 600,029

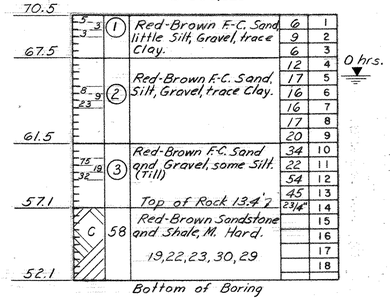

S3-4

RECONSTR. ROUTE 175 STA. 98+75
OFFSET 27' RT.
N 313,781
E 600,020

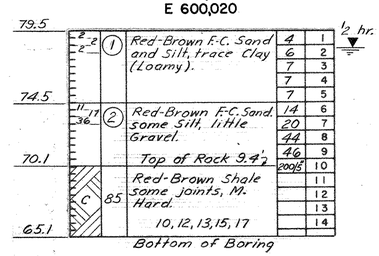

S3-5

RECONSTR. ROUTE 175 STA. 100+30
OFFSET 51' LT.
N 313,885
E 600,162

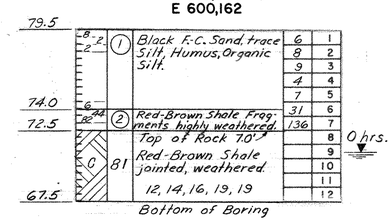

S3-6

RECONSTR. ROUTE 175 STA. 100+70
OFFSET 52' LT.
N 313,892
E 600,201

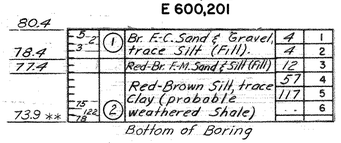

PB-5

RECONSTR. ROUTE 175 STA. 100+35
OFFSET 25' RT.
N 313,810
E 600,178

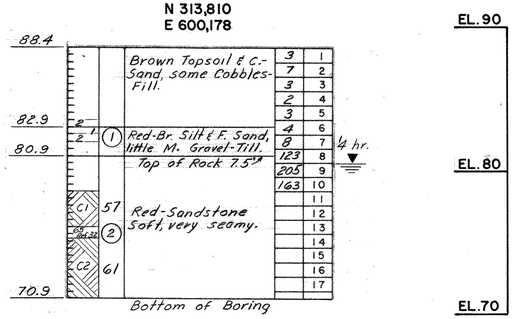

LEGEND

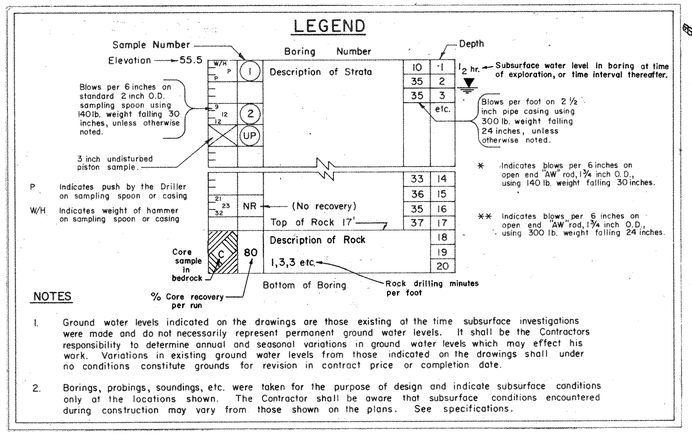

NOTES

1. Ground water levels indicated on the drawings are those existing at the time subsurface investigations were made and do not necessarily represent permanent ground water levels. It shall be the Contractors responsibility to determine annual and seasonal variations in ground water levels which may effect his work. Variations in existing ground water levels from those indicated on the drawings shall under no conditions constitute grounds for revision in contract price or completion date.

2. Borings, probings, soundings, etc. were taken for the purpose of design and indicate subsurface conditions only at the locations shown. The Contractor shall be aware that subsurface conditions encountered during construction may vary from those shown on the plans. See specifications.

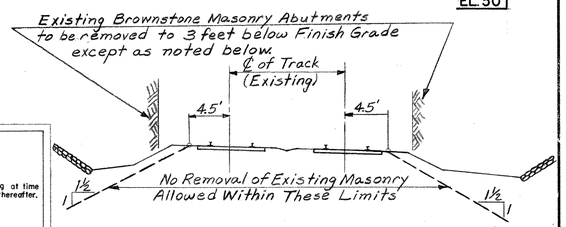

DETAIL FOR REMOVAL OF EXISTING MASONRY
Scale: ⅛" = 1'-0"

NOTE
Borings S3-1 to S3-6 were taken in February 1972. Pilot Boring PB-5 was taken in November 1970.

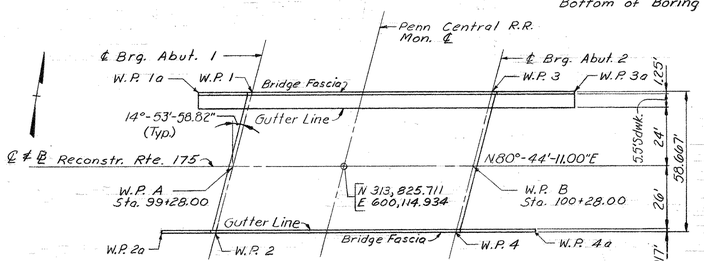

WORKING POINT LOCATION PLAN
NOT TO SCALE

TABLE OF COORDINATES

WORKING POINT	NORTH	EAST
1	313,849.847	600,071.889
1a	313,845.903	600,047.709
2	313,789.432	600,065.927
2a	313,785.488	600,041.747
3	313,865.944	600,170.585
3a	313,869.888	600,194.765
4	313,805.530	600,164.623
4a	313,809.474	600,188.803
A	313,818.181	600,068.764
B	313,834.278	600,167.460

ABBREVIATIONS

C- Coarse
F- Fine
Br.- Brown
M- Medium
Ref.- Refusal

THIS SHEET NOT CORRECTED

THE INFORMATION, INCLUDING ESTIMATED QUANTITIES OF WORK SHOWN ON THESE SHEETS IS BASED ON LIMITED INVESTIGATIONS BY THE STATE AND IS IN NO WAY WARRANTED TO INDICATE THE TRUE CONDITIONS OR ACTUAL QUANTITIES OR DISTRIBUTION OF QUANTITIES OF WORK WHICH WILL BE REQUIRED.

DATE	DESCRIPTION

REVISIONS

CONNECTICUT
DEPARTMENT OF TRANSPORTATION
BUREAU OF HIGHWAYS

NEWINGTON

RECONSTRUCTION OF ROUTE 175 OVER PENN CENTRAL R.R. (NEW HAVEN LINE)

BORINGS & COORDINATES

ENGINEER C E MAGUIRE, INC.
APPROVED Joseph A. Genereux DATE 9-27-1973
DRAFTSMAN P.Z.J. CHECKER R.R. & G.S.W. DESIGNER R.R. & G.S.W.
STRUCTURE NO. 88-59-3 STRUCTURE SHEET 2 of 12

(3)

ANDREW T. JOHNSON CO., INC. 944

88 59

474 01

64

FORM NO. ENG. 15 ED. 11-52

F.H.W.A. REGION NO.	STATE	TOWN	FED. AID PROJ. NO.	PROJ. NO.	YEAR	ROUTE NO.	SHEET NO.	TOTAL SHEETS
1	CONN.	NEWINGTON	N-RR-(240)(1)	88-59	1976	175	65	111

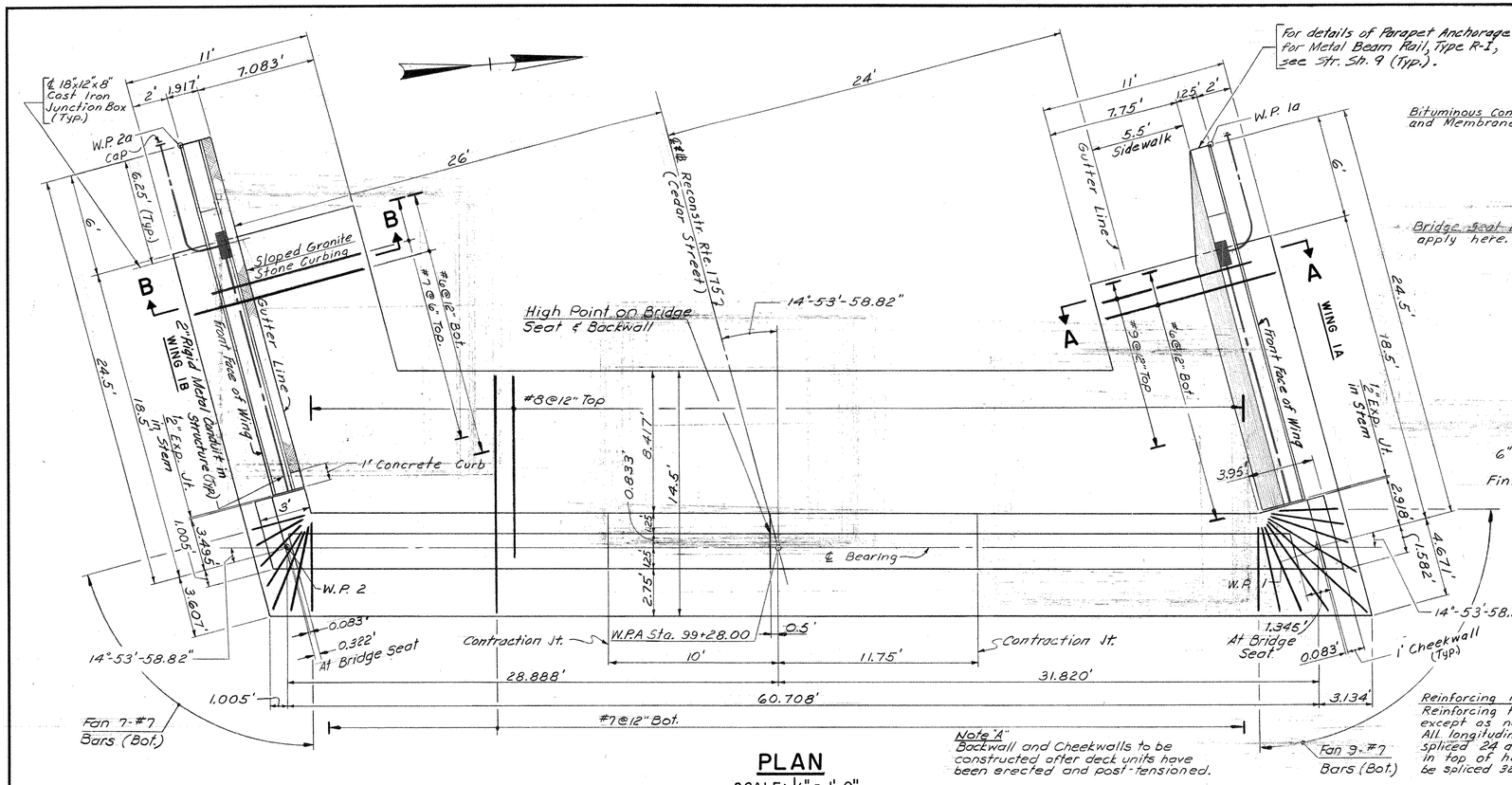

PLAN

SCALE: 1/4" = 1'-0"

For details of Parapet Anchorage for Metal Beam Rail, Type R-I, see Str. Sh. 9 (Typ.).

Note "A"
Backwall and Cheekwalls to be constructed after deck units have been erected and post-tensioned.

Reinforcing Notes
Reinforcing to have 2" cover except as noted otherwise. All longitudinal bars to be spliced 24 dia. except those in top of heel, which shall be spliced 32 dia.

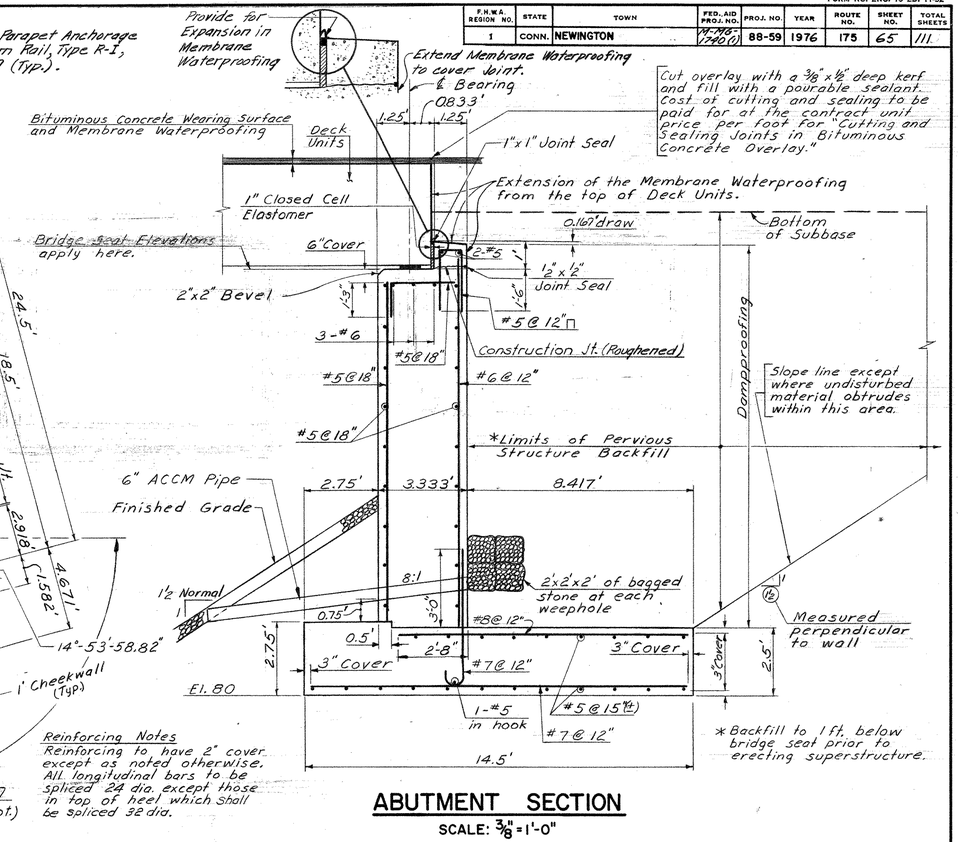

Cut overlay with a 3/8"x1/2" deep kerf and fill with a pourable sealant. Cost of cutting and sealing to be paid for at the contract unit price per foot for "Cutting and Sealing Joints in Bituminous Concrete Overlay."

ABUTMENT SECTION

SCALE: 3/8" = 1'-0"

* Backfill to 1 ft. below bridge seat prior to erecting superstructure.

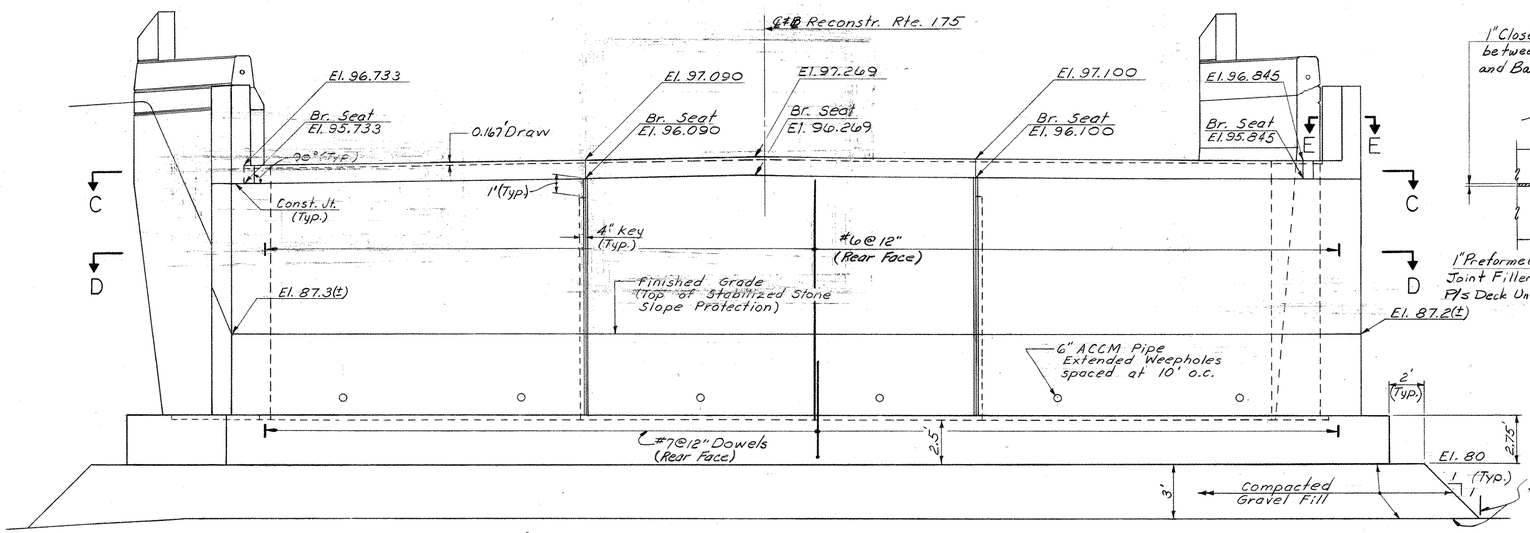

Maximum Design Foundation Pressure = 3.0 Tons / Sq. Ft. (Group 1)

ELEVATION

SCALE: 1/4" = 1'-0"

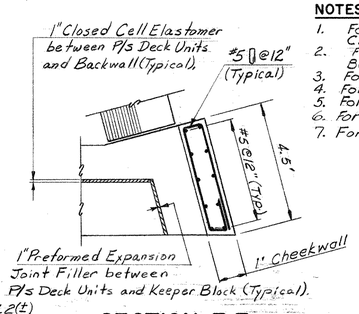

SECTION E-E

SCALE: 3/8" = 1'-0"

NOTES

1. For Sections A-A, B-B, C-C, and D-D and Details of Expansion and Contraction Joints, see Str. Sh. 6.
2. For Wingwall Elevations and Parapet Reinforcement at Junction Box, see Str. Sh. 5.
3. For Details of Elastomeric Bearing Pads, see Str. Sh. 8.
4. For Layout of Elastomeric Bearing Pad, see Str. Sh. 4.
5. For Electrical Details, see Str. Sh. 12.
6. For Coordinates of Working Points, see Str. Sh. 2.
7. For Railing Post Spacing, see Structure Sheet 7.

THIS SHEET NOT CORRECTED

THE INFORMATION, INCLUDING ESTIMATED QUANTITIES OF WORK SHOWN ON THESE SHEETS IS BASED ON LIMITED INVESTIGATIONS BY THE STATE AND IS IN NO WAY WARRANTED TO INDICATE THE TRUE CONDITIONS OR ACTUAL QUANTITIES OR DISTRIBUTION OF QUANTITIES OF WORK WHICH WILL BE REQUIRED.

NO.	DATE	DESCRIPTION

REVISIONS

CONNECTICUT
DEPARTMENT OF TRANSPORTATION
BUREAU OF HIGHWAYS

NEWINGTON

RECONSTRUCTION OF ROUTE 175 OVER PENN CENTRAL R.R. (NEW HAVEN LINE)

ABUTMENT NO. 1

ENGINEER C E MAGUIRE, INC.
APPROVED Joseph A. Genese DATE 9-27-1973
DRAFTSMAN P.Z.J CHECKER G.S.W. DESIGNER G.S.W. & G.C.C.
STRUCTURE NO. 88-59-3 STRUCTURE SHEET 3 of 12

ANDREW T. JOHNSON CO., INC. 1604

88 59

474 01

65

FORM NO. ENG. 15 ED. 11-52

F.H.W.A. REGION NO.	STATE	TOWN	FED. AID PROJ. NO.	PROJ. NO.	YEAR	ROUTE NO.	SHEET NO.	TOTAL SHEETS
1	CONN.	NEWINGTON	W-MAS-(740)(1)	88-59	1976	175	66	111

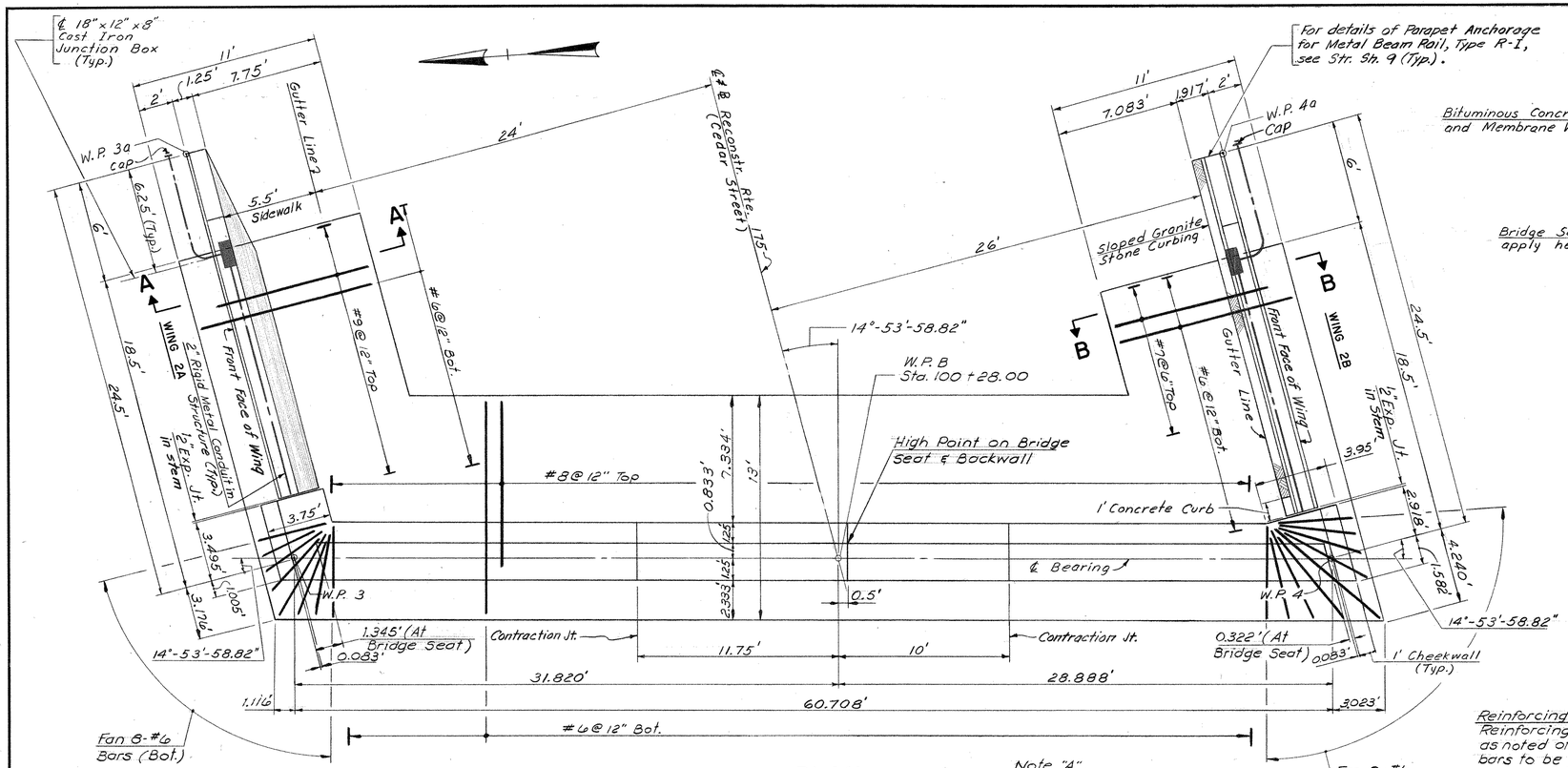

PLAN

SCALE: 1/4" = 1'-0"

Note "A"
Backwall and cheekwalls to be constructed after deck units have been erected and post-tensioned.

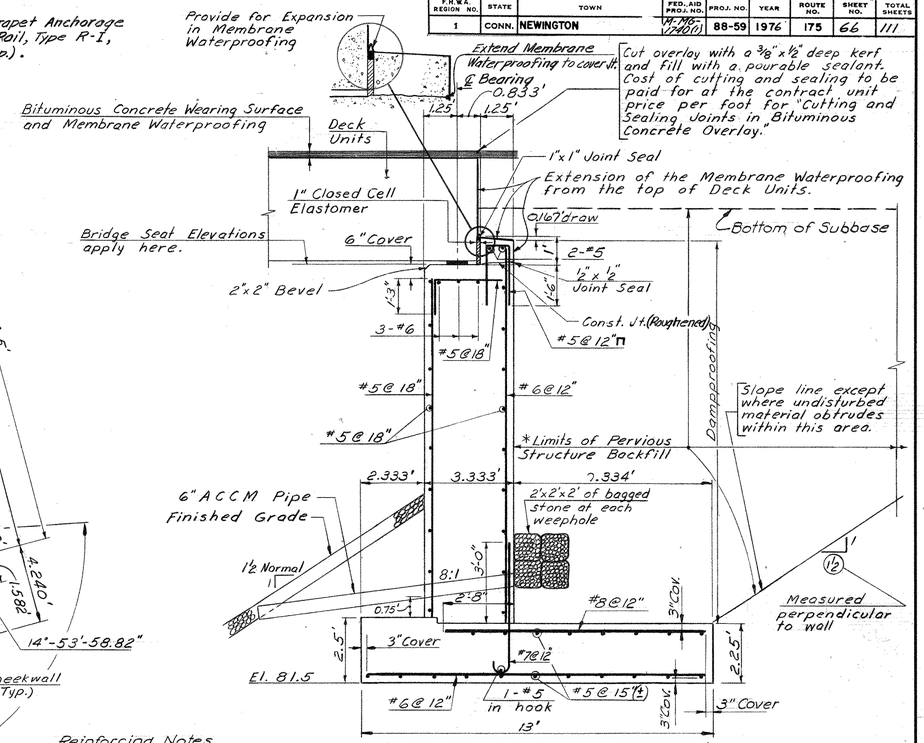

ABUTMENT SECTION

SCALE: 3/8" = 1'-0"

* Backfill to 1 ft. below bridge seat prior to erecting superstructure.

Reinforcing Notes
Reinforcing to have 2" cover except as noted otherwise. All longitudinal bars to be spliced 24 dia. except those in top of heel which shall be spliced 32 dia.

NOTES

1. For Sections A-A, B-B C-C' and D-D' and Details of Expansion and Contraction Joints, see Str. Sh. 6.
2. For Wingwall Elevations and Parapet Reinforcement at Junction Box, see Str. Sh. 5.
3. For Section E-E, see Str. Sh. 3.
4. For Details of Elastomeric Bearing Pads, see Str. Sh. 8.
5. For Electrical Details, see Str. Sh. 12.
6. For Coordinates of Working Points, see Structure Sheet 2.
7. For Railing Post Spacing, see Structure Sheet 7.

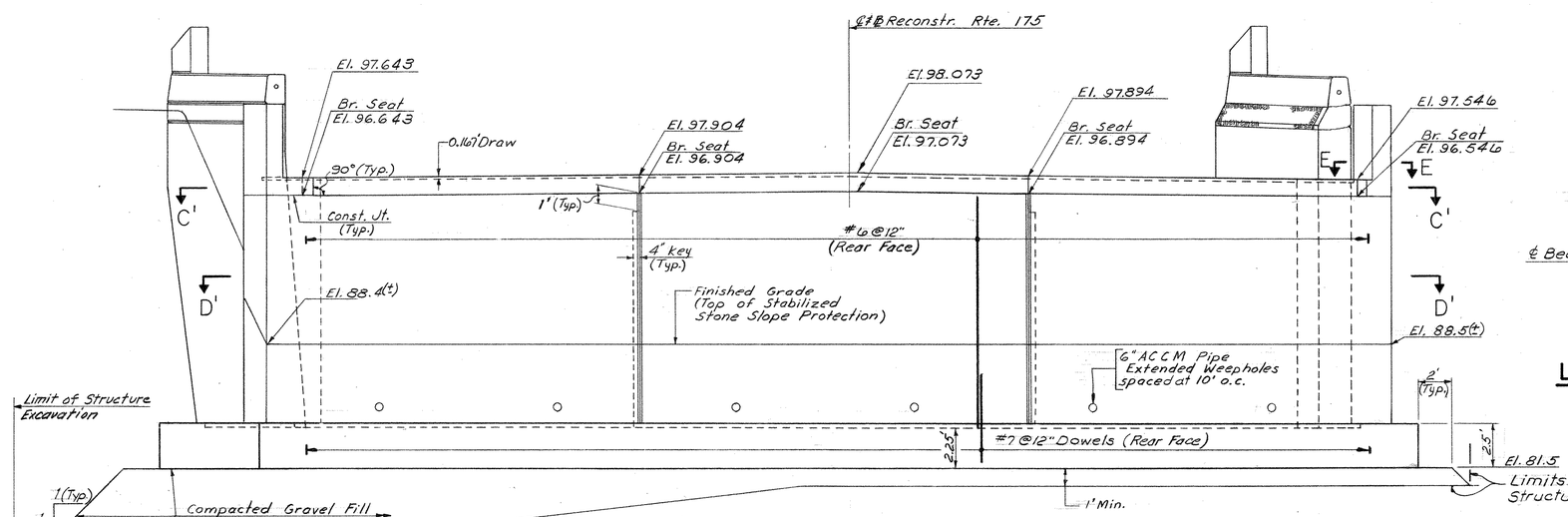

ELEVATION

SCALE: 1/4" = 1'-0"

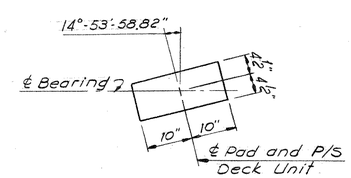

LAYOUT OF ELASTOMERIC BEARING PAD

SCALE: 3/4" = 1'-0"

THE INFORMATION, INCLUDING ESTIMATED QUANTITIES OF WORK SHOWN ON THESE SHEETS IS BASED ON LIMITED INVESTIGATIONS BY THE STATE AND IS IN NO WAY WARRANTED TO INDICATE THE TRUE CONDITIONS OR ACTUAL QUANTITIES OR DISTRIBUTION OF QUANTITIES OF WORK WHICH WILL BE REQUIRED.

NO.	DATE	DESCRIPTION

REVISIONS

This Sheet Not Corrected

CONNECTICUT
DEPARTMENT OF TRANSPORTATION
BUREAU OF HIGHWAYS

NEWINGTON

RECONSTRUCTION OF ROUTE 175 OVER PENN CENTRAL R.R. (NEW HAVEN LINE)

ABUTMENT NO. 2

ENGINEER C E MAGUIRE, INC.
APPROVED Joseph A. Gomez DATE 9-27-1973
DRAFTSMAN P.Z.J. CHECKER G.S.W. DESIGNER G.S.W. & G.C.C.
STRUCTURE NO. 88-59-3 STRUCTURE SHEET 4 of 12

FORM NO. ENG. 15 ED. 11-92

F.H.W.A. REGION NO.	STATE	TOWN	FED. AID PROJ. NO.	PROJ. NO.	YEAR	ROUTE NO.	SHEET NO.	TOTAL SHEETS
1	CONN.	NEWINGTON	BR-880-(7)001	88-59	1976	175	67	111

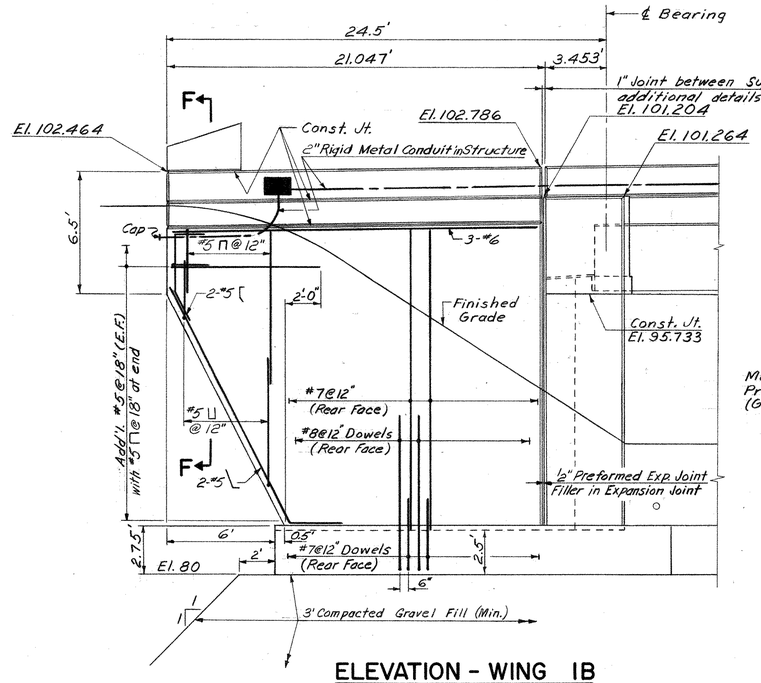

ELEVATION - WING 1B

SCALE: 1/4" = 1'-0"

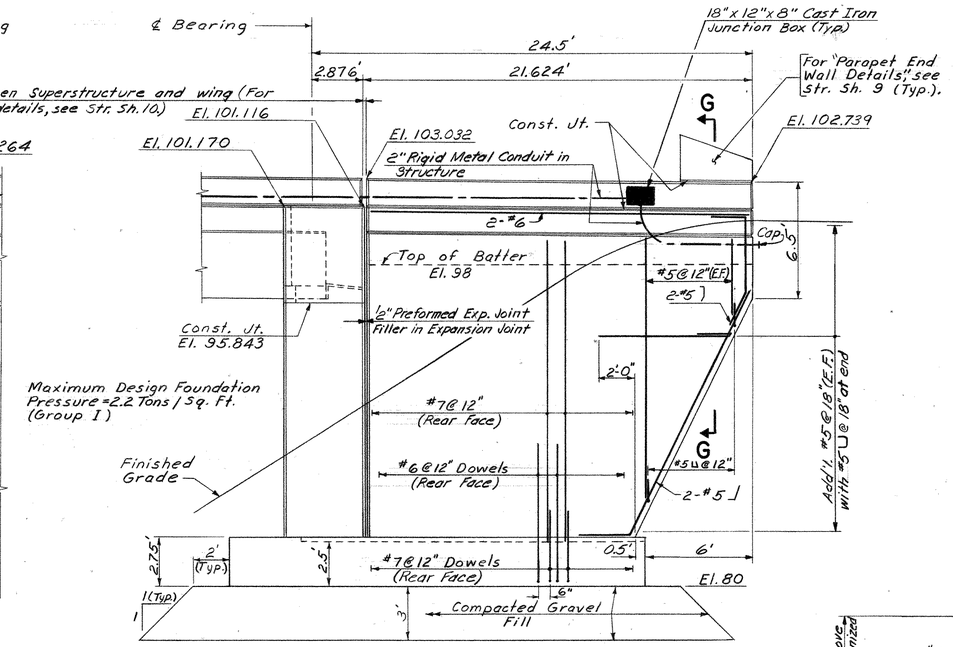

ELEVATION - WING 1A

SCALE: 1/4" = 1'-0"

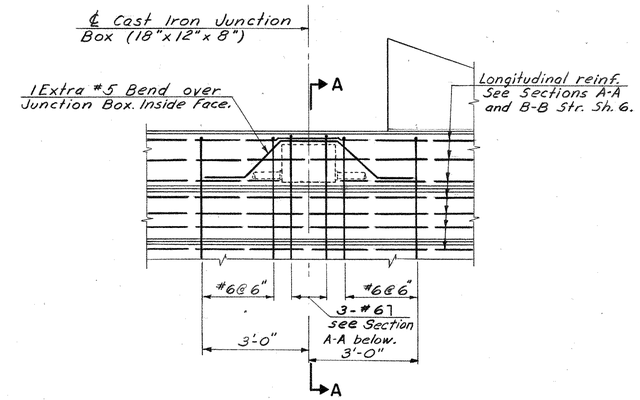

ELEVATION

SCALE: 1/2" = 1'-0"

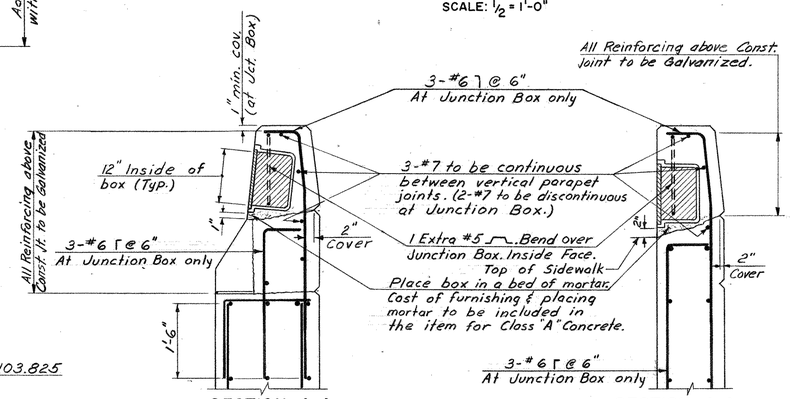

SECTION A-A (PARAPET AND SLOPED CURB)

SCALE: 3/4" = 1'-0"

SECTION A-A (PARAPET AND SIDEWALK)

SCALE: 3/4" = 1'-0"

PARAPET REINFORCEMENT AT JUNCTION BOX

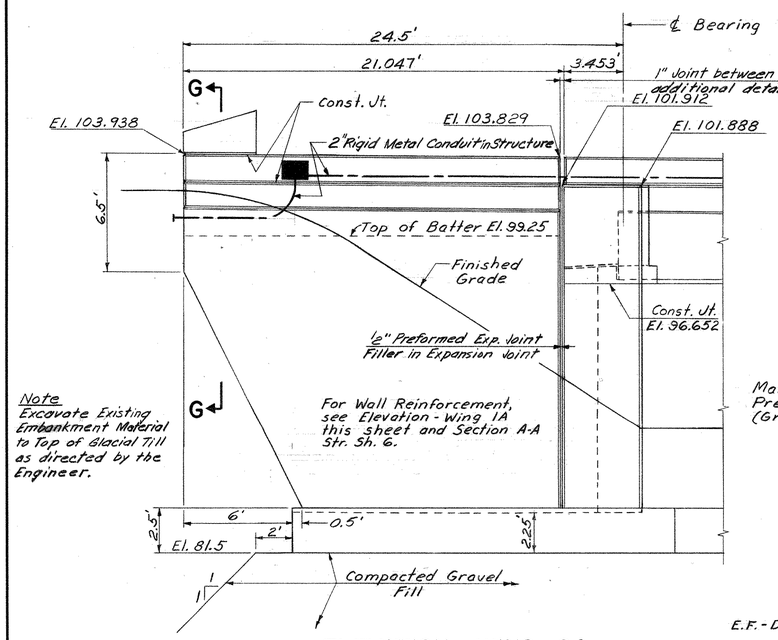

Note
Excavate Existing Embankment Material to Top of Glacial Till as directed by the Engineer.

ELEVATION - WING 2A

SCALE: 1/4" = 1'-0"

E.F. - Denotes Each Face

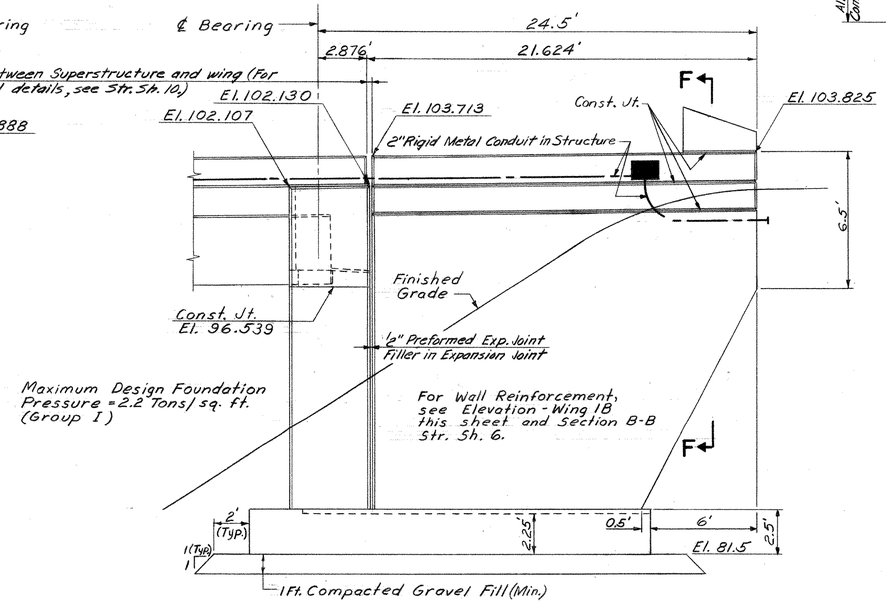

ELEVATION - WING 2B

SCALE: 1/4" = 1'-0"

THE INFORMATION, INCLUDING ESTIMATED QUANTITIES OF WORK SHOWN ON THESE SHEETS IS BASED ON LIMITED INVESTIGATIONS BY THE STATE AND IS IN NO WAY WARRANTED TO INDICATE THE TRUE CONDITIONS OR ACTUAL QUANTITIES OR DISTRIBUTION OF QUANTITIES OF WORK WHICH WILL BE REQUIRED.

NOTES

1. For Wingwall Sections and Sections F-F and G-G, see Str. Sh. 6.
2. For Railing Post Spacing, see Deck Plan, Str. Sh. 7.
3. For Electrical Details, see Str. Sh. 12.
4. For Railing Post Spacing, see Structure Sheet 7.

THIS SHEET NOT CORRECTED

NO.	DATE	DESCRIPTION

REVISIONS

CONNECTICUT
DEPARTMENT OF TRANSPORTATION
BUREAU OF HIGHWAYS

NEWINGTON

RECONSTRUCTION OF ROUTE 175 OVER PENN CENTRAL R.R. (NEW HAVEN LINE)

WINGWALL DETAILS

ENGINEER C E MAGUIRE, INC.
APPROVED Joseph A. Gonsue DATE 9-27-1973
DRAFTSMAN P.Z.J. CHECKER G.S.W. DESIGNER G.C.C. & G.S.W.
STRUCTURE NO. 88-59-3 STRUCTURE SHEET 5 of 12

FORM NO. ENG. 15 ED. 11-52

F.H.W.A. REGION NO.	STATE	TOWN	FED. AID PROJ. NO.	PROJ. NO.	YEAR	ROUTE NO.	SHEET NO.	TOTAL SHEETS
1	CONN.	NEWINGTON	(7)175-6 (140)(1)	88-59	1976	175	68	111

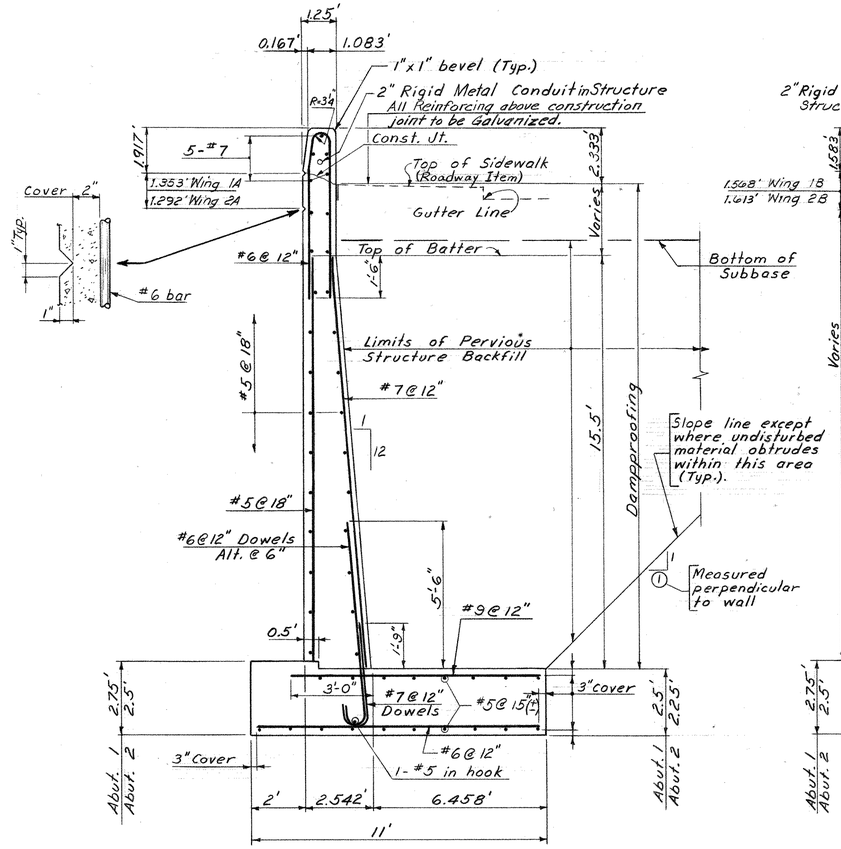

SECTION A-A

SCALE: 3/8"=1'-0"

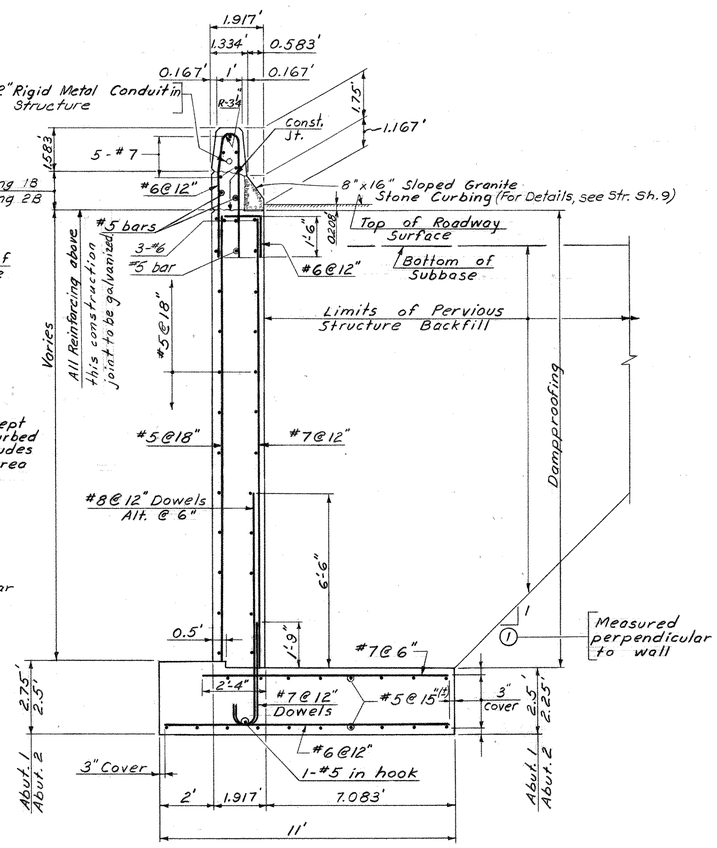

SECTION B-B

SCALE: 3/8"=1'-0"

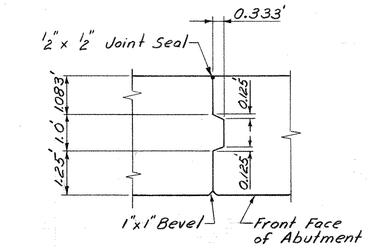

Note: No Reinforcement shall pass through contraction joints.

CONTRACTION JOINTS

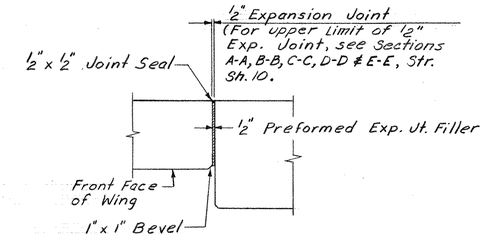

Note: No reinforcement shall pass through expansion joints.

EXPANSION JOINTS

VERTICAL STEM JOINT DETAILS

NOT TO SCALE:

JOINT SEAL
Abutments: Joint Seal to extend from top of footing to top of backwall and horizontally along top of backwall.
Wingwalls: Joint Seal to extend from top of footing to top of abutment backwall (see Str. Sh. 10) and horizontally along these joints to front face of wing.

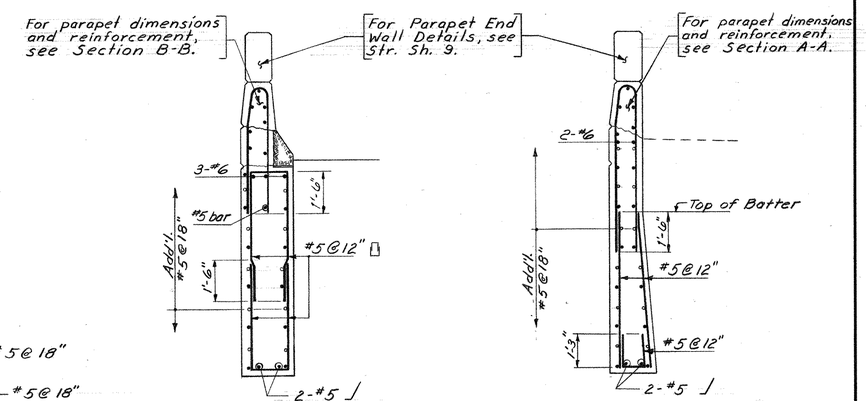

SECTION F-F

SCALE: 3/8"=1'-0"

SECTION G-G

SCALE: 3/8"=1'-0"

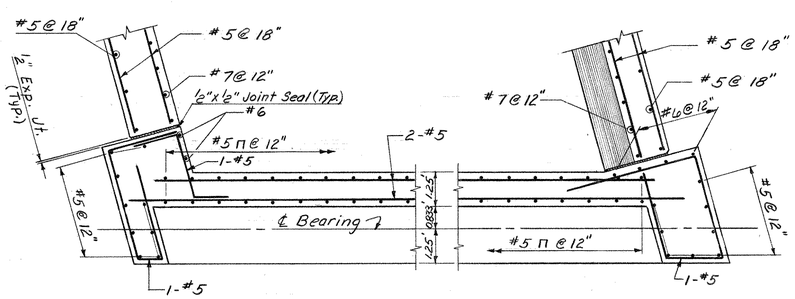

SECTION C-C

(SECTION C'-C' SIMILAR)

SCALE: 3/8"=1'-0"

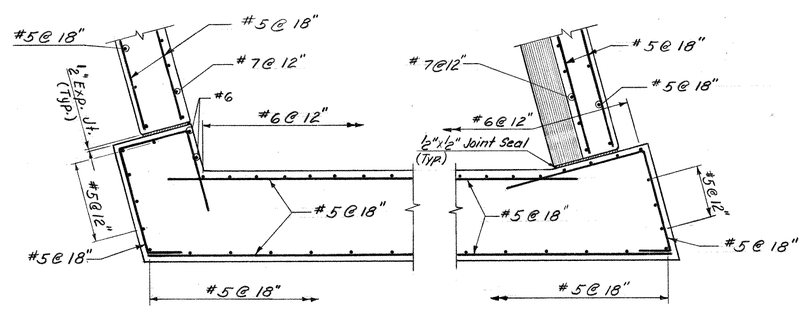

SECTION D-D

(SECTION D'-D' SIMILAR)

SCALE: 3/8"=1'-0"

REINFORCING NOTES
Reinforcing to have 2" cover except where shown otherwise.
All longitudinal bars shall be spliced 24 dia. except those in top of heel which shall be spliced 32 dia.

THIS SHEET NOT CORRECTED

THE INFORMATION, INCLUDING ESTIMATED QUANTITIES OF WORK SHOWN ON THESE SHEETS IS BASED ON LIMITED INVESTIGATIONS BY THE STATE AND IS IN NO WAY WARRANTED TO INDICATE THE TRUE CONDITIONS OR ACTUAL QUANTITIES OR DISTRIBUTION OF QUANTITIES OF WORK WHICH WILL BE REQUIRED.

NO.	DATE	DESCRIPTION

REVISIONS

CONNECTICUT
DEPARTMENT OF TRANSPORTATION
BUREAU OF HIGHWAYS

NEWINGTON

RECONSTRUCTION OF ROUTE 175 OVER PENN CENTRAL R.R. (NEW HAVEN LINE)

ABUTMENT & WINGWALL SECTIONS

ENGINEER C E MAGUIRE, INC.
APPROVED Joseph A. Genese DATE 9-27-1973
DRAFTSMAN P.Z.J. CHECKER G.S.W. DESIGNER G.C.C. & G.S.W.
STRUCTURE NO. 88-59-3 STRUCTURE SHEET 6 of 12

FORM NO. ENG. 15 ED. 11-52

F.H.W.A. REGION NO.	STATE	TOWN	FED. AID PROJ. NO.	PROJ. NO.	YEAR	ROUTE NO.	SHEET NO.	TOTAL SHEETS
1	CONN.	NEWINGTON	PR-PRG-(740)(1)	88-59	1976	175	69	111

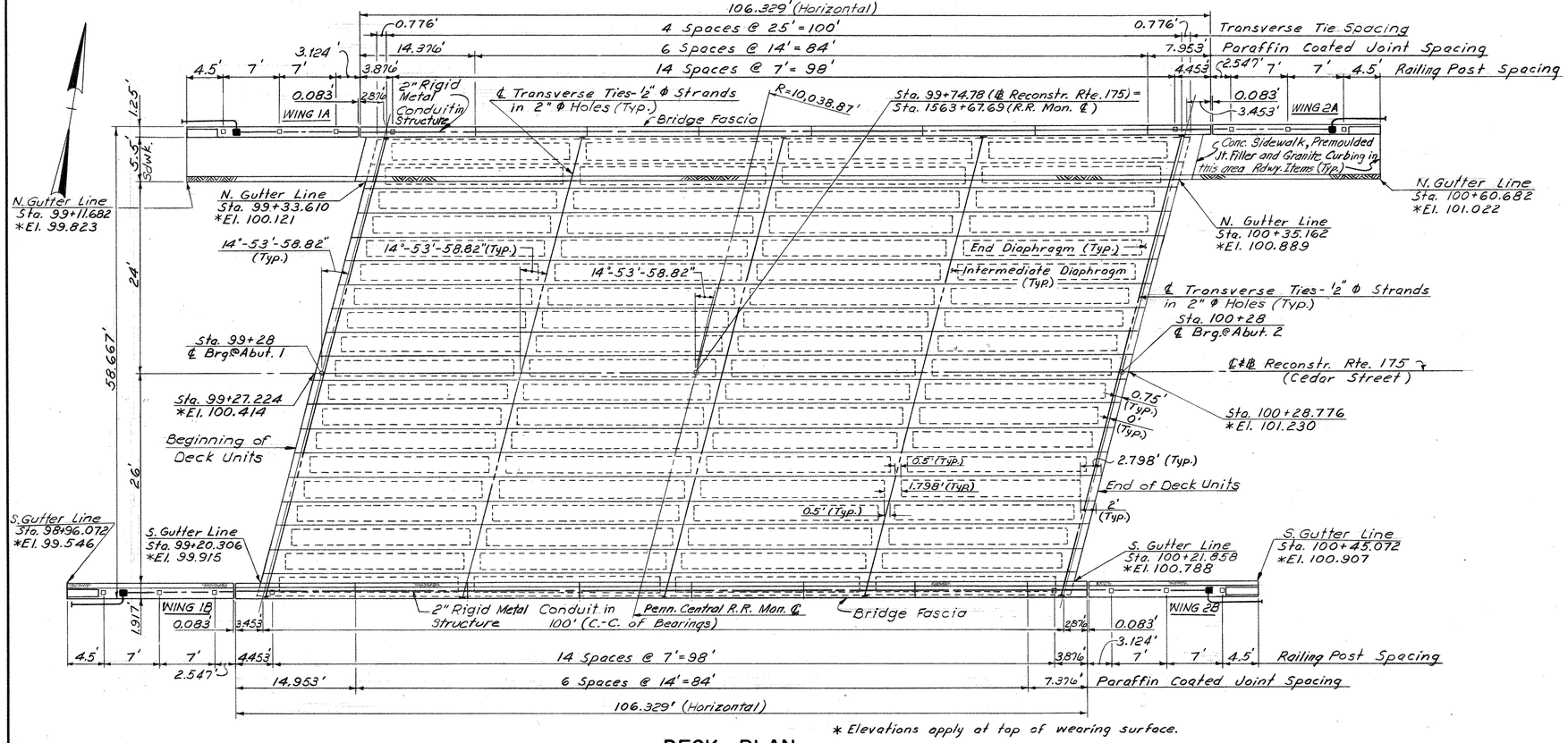

DECK PLAN

SCALE: 1/8" = 1'-0"

TOP OF WEARING SURFACE ELEVATIONS			
STATION	N.G.L.	BASE LINE	S.G.L.
99+00	99.643	100.017	99.611
99+10	99.798	100.172	99.766
99+20	99.942	100.316	99.910
99+30	100.076	100.450	100.044
99+40	100.198	100.572	100.166
99+50	100.310	100.684	100.278
99+60	100.411	100.785	100.379
99+70	100.501	100.875	100.469
99+80	100.580	100.954	100.548
99+90	100.649	101.023	100.617
100+00	100.706	101.080	100.674
100+10	100.758	101.132	100.726
100+20	100.810	101.184	100.778
100+30	100.862	101.236	100.830
100+40	100.914	101.288	100.882
100+50	100.966	101.340	100.934

N.G.L. - Denotes North Gutter Line
S.G.L. - Denotes South Gutter Line

NOTES

No superimposed dead or live loads shall be applied to the adjacent deck units until the mortar in the longitudinal shear keys has fully cured.
For Prestressed Deck Unit Details, see Str. Sh. 8.

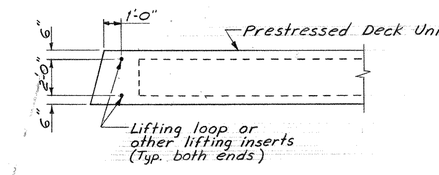

LOCATION OF LIFTING INSERTS

SCALE: 1/4" = 1'-0"

NOTES

In handling, Deck Units must be maintained in an upright position at all times.
All lifting inserts must be engaged during handling.

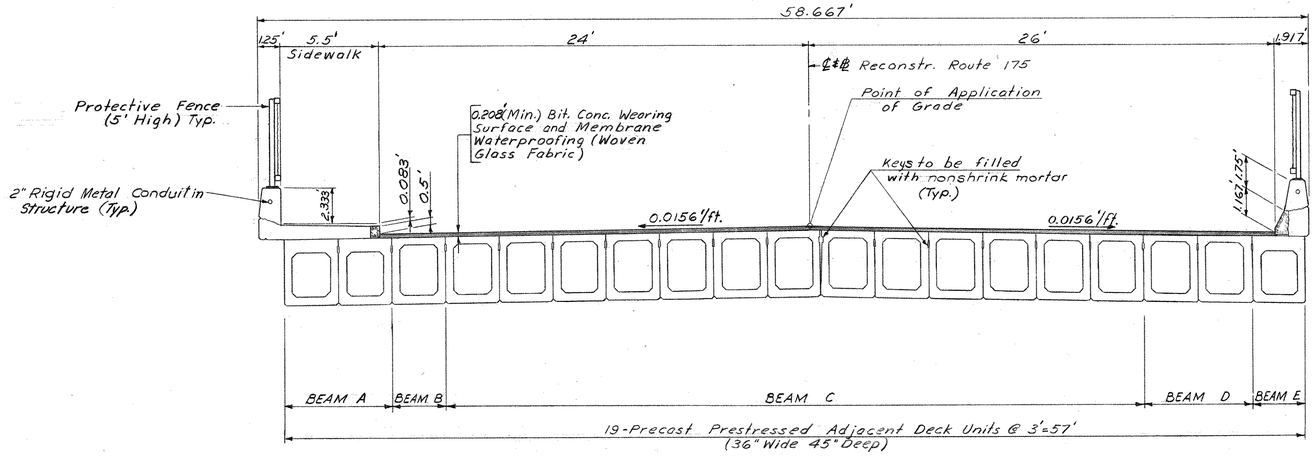

TYPICAL BRIDGE SECTION

SCALE: 1/4" = 1'-0"

NOTES

1. For Parapet and Sidewalk Details and Parapet and Sloped Curb Details, see Str. Sh. 9.
2. For Parapet Joint Details, see Str. Sh. 9.
3. For Electrical Details, see Str. Sh. 12.

THIS SHEET NOT CONTINUED

NO.	DATE	DESCRIPTION

REVISIONS

CONNECTICUT
DEPARTMENT OF TRANSPORTATION
BUREAU OF HIGHWAYS

NEWINGTON

RECONSTRUCTION OF ROUTE 175 OVER PENN CENTRAL R.R. (NEW HAVEN LINE)

DECK PLAN

ENGINEER C.E. MAGUIRE, INC.
APPROVED Joseph A. Genese DATE 9-27-1973
DRAFTSMAN P.Z.J. CHECKER G.S.W. DESIGNER G.C.C.
STRUCTURE NO. 88-59-3 STRUCTURE SHEET 7 of 12

FORM NO. ENG. 15 ED. 11-62

F.H.W.A. REGION NO.	STATE	TOWN	FED. AID PROJ. NO.	PROJ. NO.	YEAR	ROUTE NO.	SHEET NO.	TOTAL SHEETS
1	CONN.	NEWINGTON	(F-NO. 178 (1))	88-59	1976	175	70	111

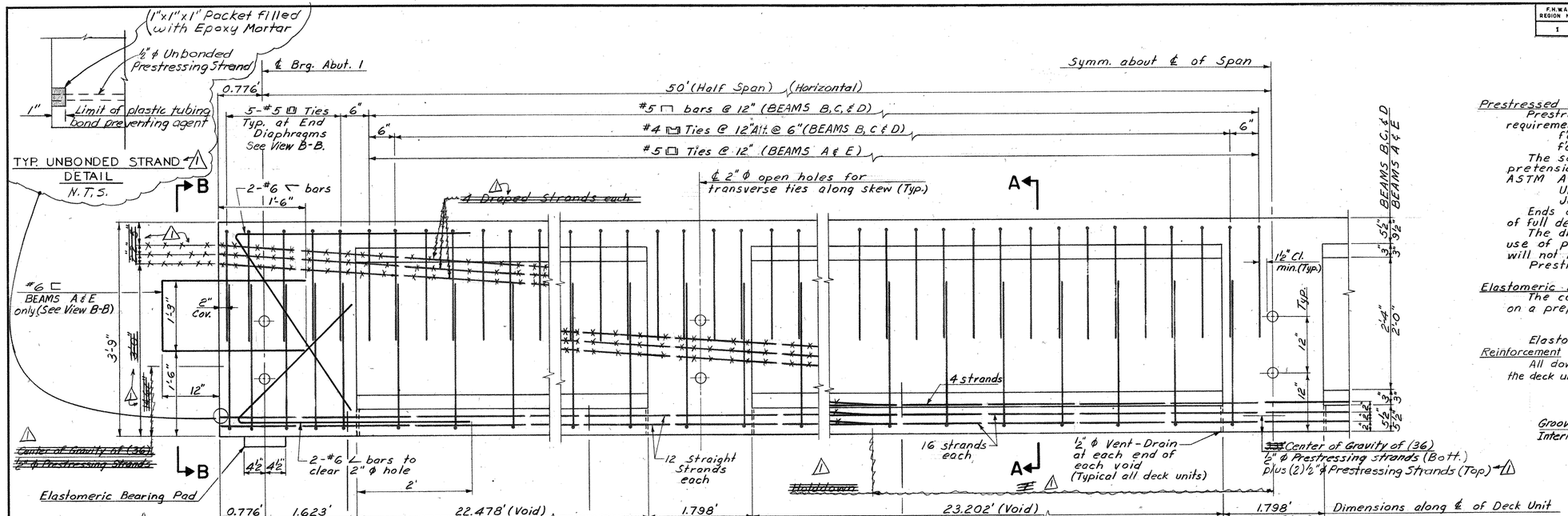

LONGITUDINAL SECTION ALONG ℄ DECK UNIT

SCALE: 1"=1'-0"

NOTES

Prestressed Deck Units

Prestressed deck units shall conform to the following requirements:

f'c = 5,800 psi

f'ci = ~~4,000 psi~~ 4500 p.s.i.

The seven wire strands (½ Diameter Uncoated) for pretensioning shall conform to the requirements of ASTM A 416 Grade 270 and the following:

Ultimate Strength (fs) = 270,000 psi

Jacking Force (Fj) = 31,000 lbs. per strand

Ends of deck units shall be vertical after application of full dead load.

The drilling of holes in prestressed deck units, or the use of power actuated tools on prestressed deck units will not be permitted.

Prestressing strands shall have 1½" min. cover.

Elastomeric Bearing Pads

The contractor shall set the elastomeric bearing pads on a prepared surface as required by Article 5.21.03-2a.

Elastomeric bearing pad designation is EBP 3-2.

Reinforcement

All dowels, stirrups and lifting inserts projecting from the deck units shall be galvanized.

Note

Voids in all Deck Units shall be formed of an approved material, and shall be vented during the curing period. See special provisions for "Prestressed Deck Units (36"x45")". For Deck Plan and Location of Lifting Inserts, see Str. Sh. 7.

After all transverse ties have been installed and tensioned, shear keys shall be filled with nonshrink mortar (Typ.). No superimposed dead or live loads shall be applied to the adjacent deck units until the mortar in the longitudinal shear keys has fully cured.

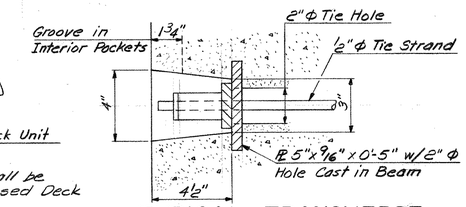

TYPICAL TRANSVERSE TENSIONING DETAIL

SCALE 3"=1'-0"

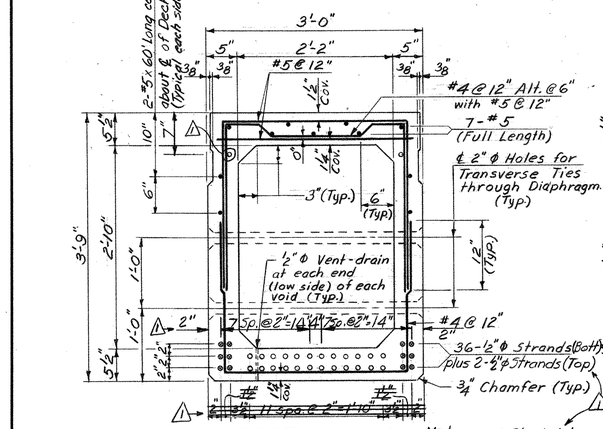

SECTION A-A

BEAMS B,C & D

SCALE: 1"=1'-0"

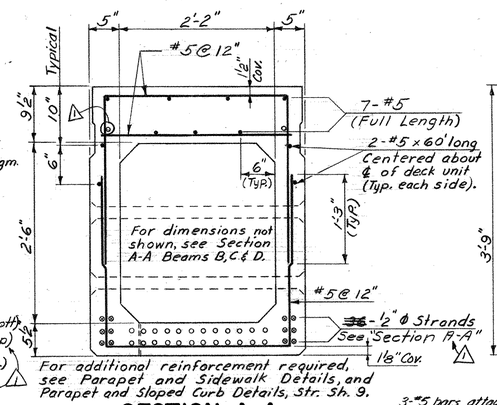

SECTION A-A

BEAMS A & E

SCALE: 1"=1'-0"

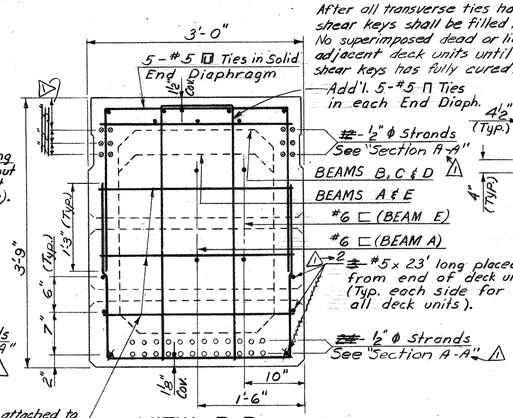

VIEW B-B

ALL BEAMS

SCALE: 1"=1'-0"

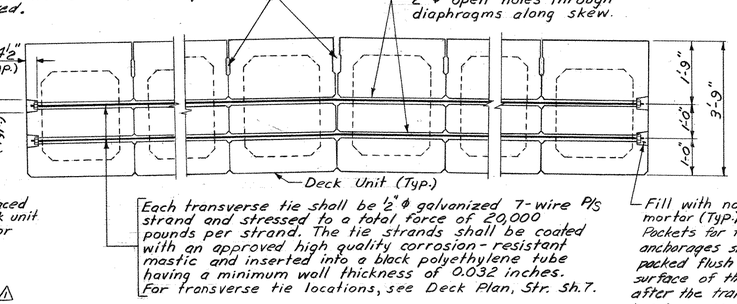

TRANSVERSE DECK STRESSING DETAIL

SCALE: ½"=1'-0"

Note

⊗ Indicates ~~draped~~ Straight strands

○ Indicates straight strands

● Indicates non-prestressed bars

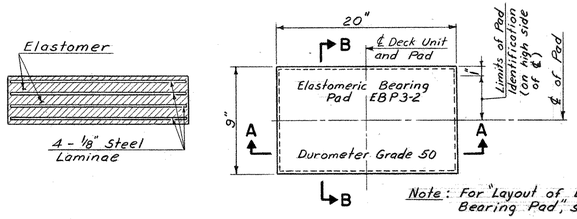

SECTION A-A

PLAN

SECTION B-B

Note: For "Layout of Elastomeric Bearing Pad", see Str. Sh. 4.

ELASTOMERIC BEARING PAD DETAILS

NOT TO SCALE

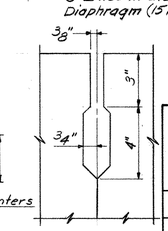

SHEAR KEY DETAIL

SCALE: 3"=1'-0"

Note: Shear Key to be eliminated on outside face of fascia units.

Deck Unit Description	Dead Load Deflections (feet)						Cambers (feet)		Elastomeric Bearing Pad D.L. Deflection (feet)
	conc. slab	curb and parapet	sidewalk and parapet	wearing surface	utilities	total dead load deflec.*	est.**	residual	
BEAM A	—	—	0.080	—	—	0.080	0.121	0.041	0.004
BEAM B	—	—	0.090	0.026	—	0.116	0.119	0.003	0.004
BEAM C	—	—	—	0.029	—	0.029	0.119	0.090	0.004
BEAM D	—	0.050	—	0.029	—	0.079	0.119	0.040	0.004
BEAM E	—	0.044	—	0.010	—	0.054	0.121	0.067	0.004

* Excludes weight of beam

** Estimated Camber = Deflection due to P/S minus deflection due to weight of beam

NO.	DATE	DESCRIPTION
1	4-11-79	Strand number, pattern & bonded length.

REVISIONS

CONNECTICUT
DEPARTMENT OF TRANSPORTATION
BUREAU OF HIGHWAYS

NEWINGTON

RECONSTRUCTION OF ROUTE 175
OVER
PENN CENTRAL R.R. (NEW HAVEN LINE)

PRESTRESSED DECK UNITS (36"x45")

ENGINEER C E MAGUIRE, INC.

APPROVED Joseph A. Genevie DATE 9-27-1973

DRAFTSMAN P.Z.J. CHECKER G.S.W. DESIGNER G.C.C.

STRUCTURE NO. 88-59-3 STRUCTURE SHEET 8 of 12

FORM NO. ENG. 156 ED. 10-69

F.H.W.A. DIV. OFF.	STATE	TOWN	FED. AID PROJ. NO.	PROJ. NO.	YEAR	ROUTE NO.	SHEET NO.	TOTAL SHEETS
1	CONN.	NEWINGTON	IM-116-1(190)	88-59	1976	175	71	111

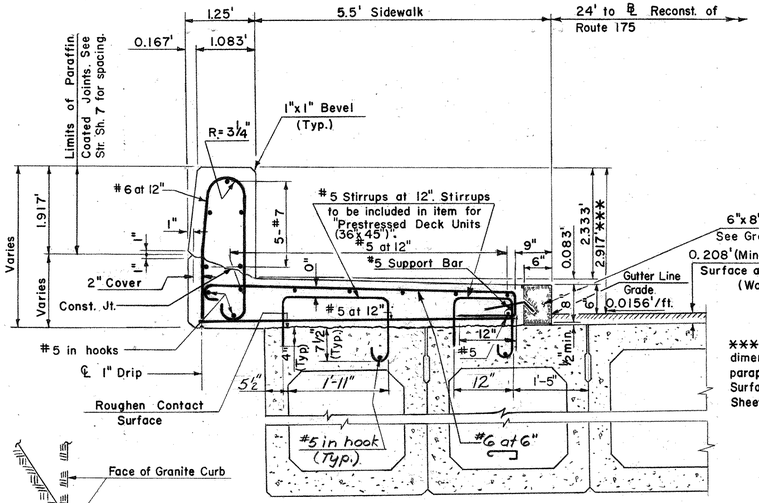

*** Parapet height control is the dimension from Gutter Line to top of parapet. See table "Top of Wearing Surface Elevations" on Structure Sheet 7.

NOTE: All bars in sidewalk and parapet shall have 2" cover, except as noted.

PARAPET AND SIDEWALK DETAILS

SCALE: ¾"=1'-0"

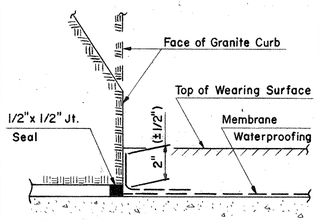

TREATMENT OF MEMBRANE WATERPROOFING AT GUTTER

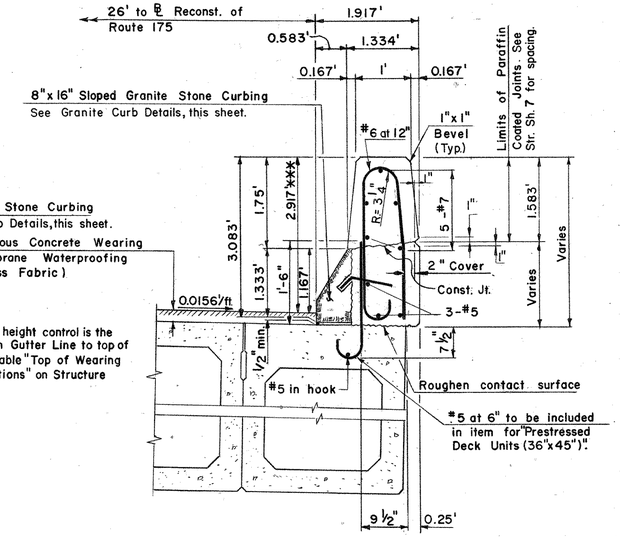

NOTE: All bars in parapet shall have 2" cover, except as noted.

PARAPET AND SLOPED CURB DETAILS

SCALE: ¾"=1'-0"

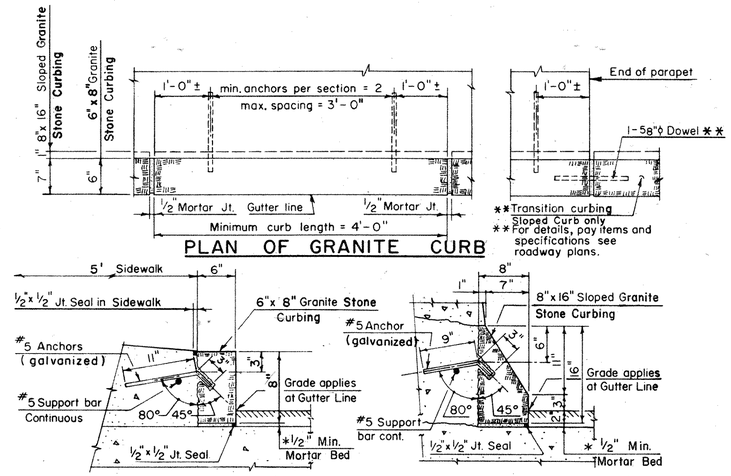

PLAN OF GRANITE CURB

* ½" Mortar bed to be increased to accommodate variations in vertical alignment.

—— 6" x 8" GRANITE STONE CURBING —— —— 8" x 16" SLOPED GRANITE STONE CURBING ——

GRANITE CURB DETAILS

METAL BEAM RAIL (TYPE R-I) ANCHORAGE AT FACE OF PARAPET WINGS 1B & 2B (SLOPED CURB)

PARAPET JOINT DETAILS

PARAPET END WALL DETAILS

SCALE: ¾"=1'-0"

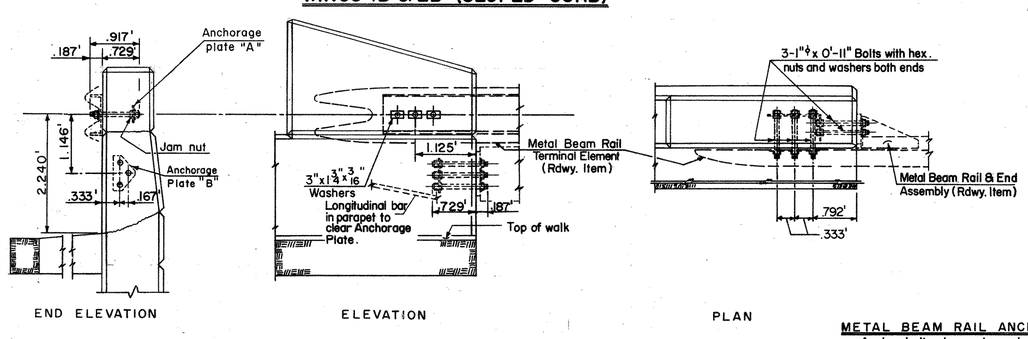

METAL BEAM RAIL (TYPE R-I) ANCHORAGE AT FACE OF PARAPET WINGS 1A & 2A (SIDEWALK)

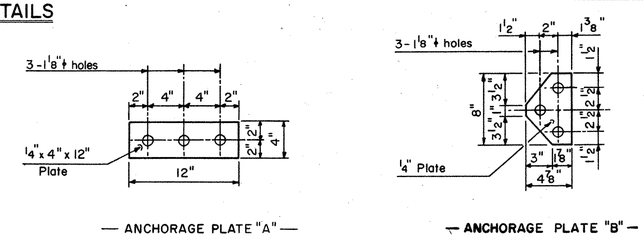

ANCHORAGE PLATE DETAILS

METAL BEAM RAIL ANCHORAGE NOTES

Anchor bolts, hex nuts and washers shall conform to the physical requirements of ASTM A325 or AISI 4140 (annealed and cold drawn). Anchor bolts, nuts and washers shall be galvanized in accordance with the requirements of ASTM A153. Anchorage plates shall conform to the requirements of ASTM A36. All anchorage material will be paid for at the contract unit price per pound for "Deformed Steel Bars."

THIS SHEET NOT USED

NO.	DATE	DESCRIPTION

REVISIONS

CONNECTICUT
DEPARTMENT OF TRANSPORTATION
BUREAU OF HIGHWAYS

NEWINGTON

RECONSTRUCTION OF ROUTE 175 OVER PENN CENTRAL R.R. (NEW HAVEN LINE)

DECK DETAILS

ENGINEER C E MAGUIRE, INC.
APPROVED Joseph A. Gonene DATE 9-27-1973
DRAFTSMAN P.Z.J. CHECKER G.S.W. DESIGNER G.C.C.
STRUCTURE NO. 88-59-3 STRUCTURE SHEET 9 OF 12

BRUNING 44-132 11776

88 59 474 01 71 (3)

FORM NO. ENG. 15 ED. 11-62

F.H.W.A. REGION NO.	STATE	TOWN	FED. AID PROJ. NO.	PROJ. NO.	YEAR	ROUTE NO.	SHEET NO.	TOTAL SHEETS
1	CONN.	NEWINGTON	NH-NG-(260)(1)	88-59	1976	175	72	111

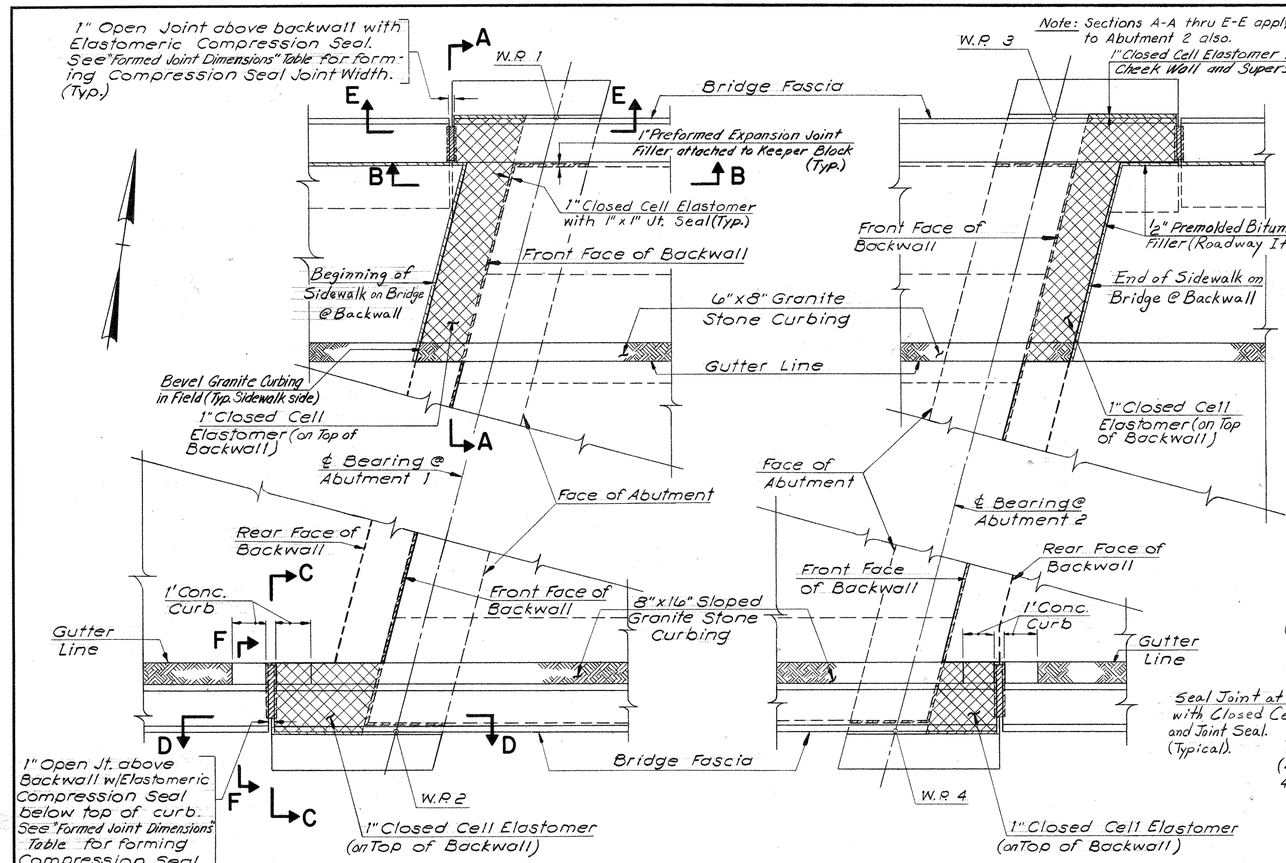

PARTIAL DECK PLAN

SCALE: 1/2" = 1'-0"

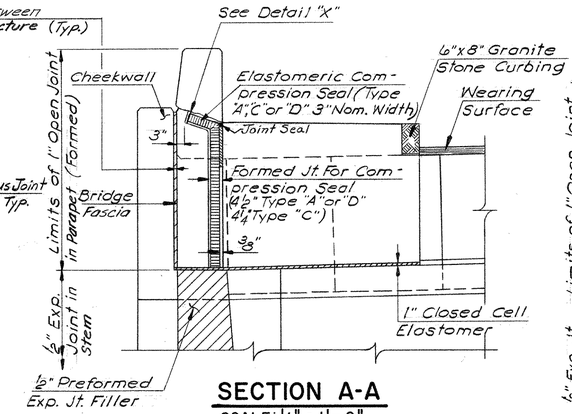

SECTION A-A

SCALE: 1/2" = 1'-0"

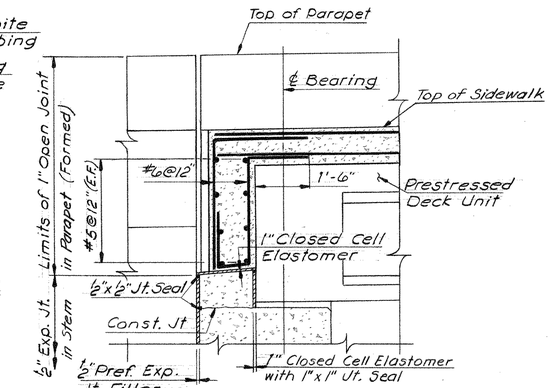

SECTION B-B

SCALE: 1/2" = 1'-0"

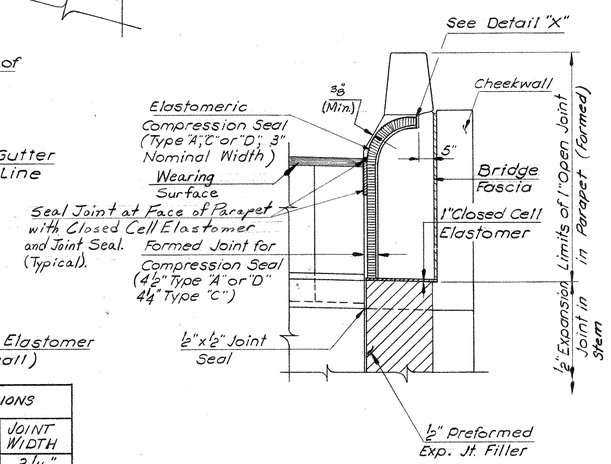

SECTION C-C

SCALE: 1/2" = 1'-0"

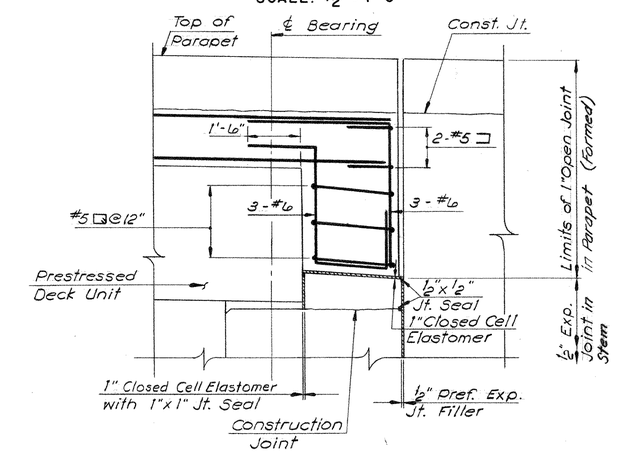

SECTION D-D

SCALE: 1/2" = 1'-0"

Note
All reinforcement to have 2" cover except as noted otherwise.

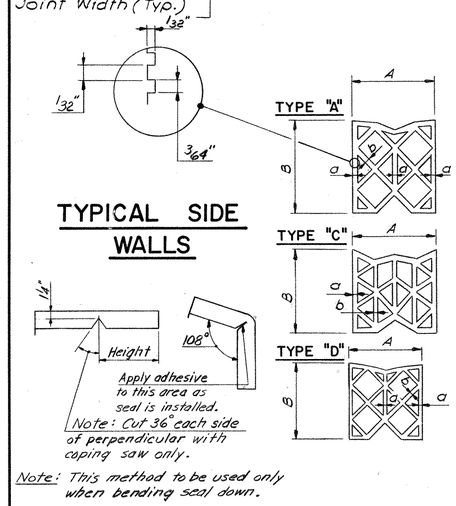

TYPICAL SIDE WALLS

Note: This method to be used only when bending seal down.

SEAL BEND DOWN AT SIDEWALK ONLY

FORMED JOINT DIMENSIONS	
AMBIENT TEMPERATURE RANGE AT TIME OF POURING JOINT	JOINT WIDTH
30° - 50°	2 7/16"
50° - 70°	1 15/16"
70° - 90°	1 13/16"

TYPE "A"						
Nom. Width	A	B	THICKNESS a		THICKNESS b	
3"	3.000" +.250" -.000"	3.406" ±.188"	.188"	+.047" -.016"	.125"	+.047" -.016"

TYPE "C"						
Nom. Width	A	B	THICKNESS a		THICKNESS b	
3"	3.000" +.250" -.000"	3.000" ±.188"	.188"	+.047" -.016"	.125"	+.032" -.016"

TYPE "D"						
Nom. Width	A	B	THICKNESS a		THICKNESS b	
3"	3.000" +.250" -.000"	3.375" ±.188"	.188"	+.047" -.016"	.125"	+.047" -.016"

Notes
1. It is important that the joint be constructed exactly as detailed.
2. The compression seal shall not be installed above temperatures at which the width of the joint is less than 60% of the nominal width of the seal.

ELASTOMERIC COMPRESSION SEAL DETAILS

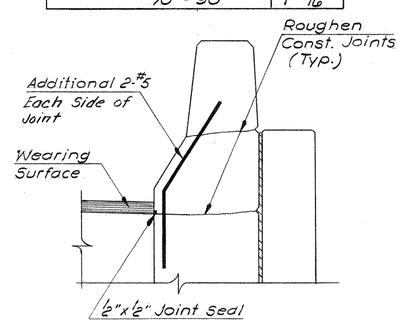

SECTION F-F

SCALE: 3/4" = 1'-0"

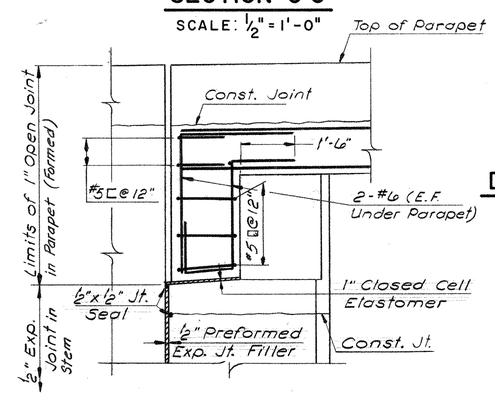

SECTION E-E

SCALE: 1/2" = 1'-0"

Provide extra 4" of seal. Cut away all but top of shell to provide end flap and bend down as shown.

DETAIL "X"

THIS SHEET NOT CORRECTED

NO.	DATE	DESCRIPTION

REVISIONS

CONNECTICUT
DEPARTMENT OF TRANSPORTATION
BUREAU OF HIGHWAYS

NEWINGTON

RECONSTRUCTION OF ROUTE 175
OVER
PENN CENTRAL R.R. (NEW HAVEN LINE)

JOINT DETAILS

ENGINEER C.E. MAGUIRE, INC.
APPROVED Joseph A. Gouveia DATE 9-27-1973
DRAFTSMAN F.A.M. CHECKER G.S.W. DESIGNER G.S.W.
STRUCTURE NO. 88-59-3 STRUCTURE SHEET 10 of 12

ANDREW T. JOHNSON CO., INC. 1604

88 59 474 01 72

3

FORM NO. ENG. 15 ED. 11-52

F.H.W.A. REGION NO.	STATE	TOWN	FED. AID PROJ. NO.	PROJ. NO.	YEAR	ROUTE NO.	SHEET NO.	TOTAL SHEETS
1	CONN.	NEWINGTON	M-MS-1(7)40(1)	88-59	1976	175	73	111

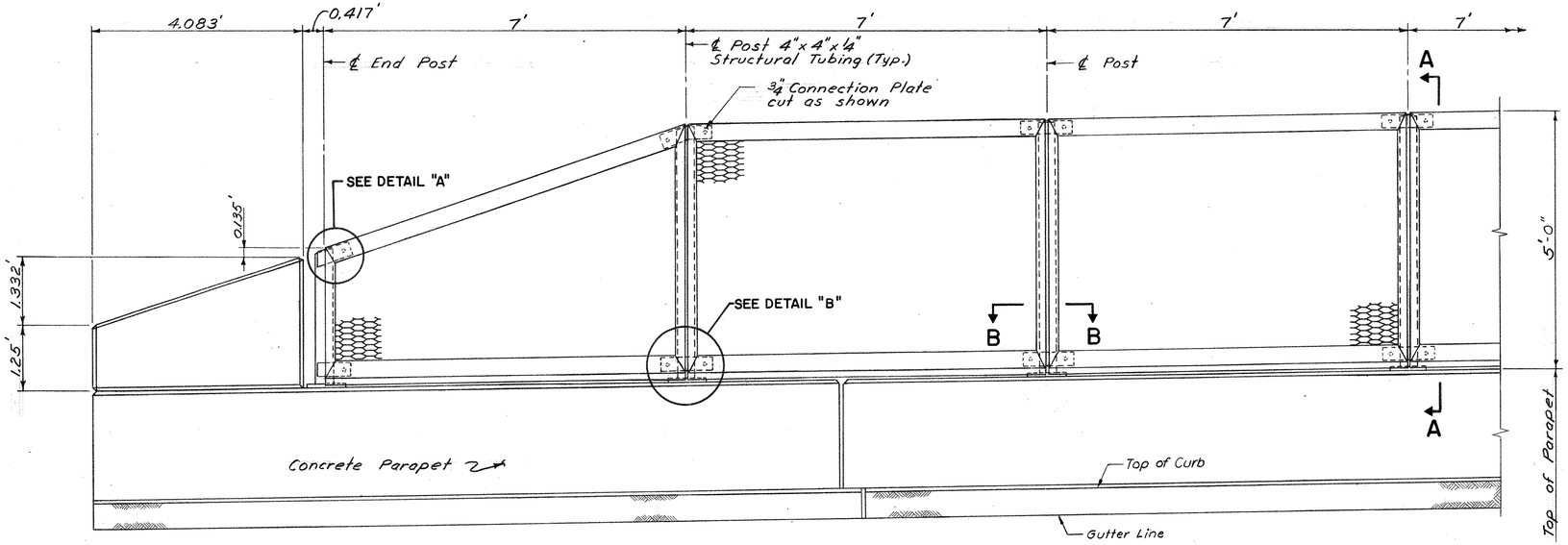

ELEVATION
(SIDEWALK SIDE SHOWN, SLOPED CURB SIDE SIMILAR)
SCALE: ¾" = 1'-0"

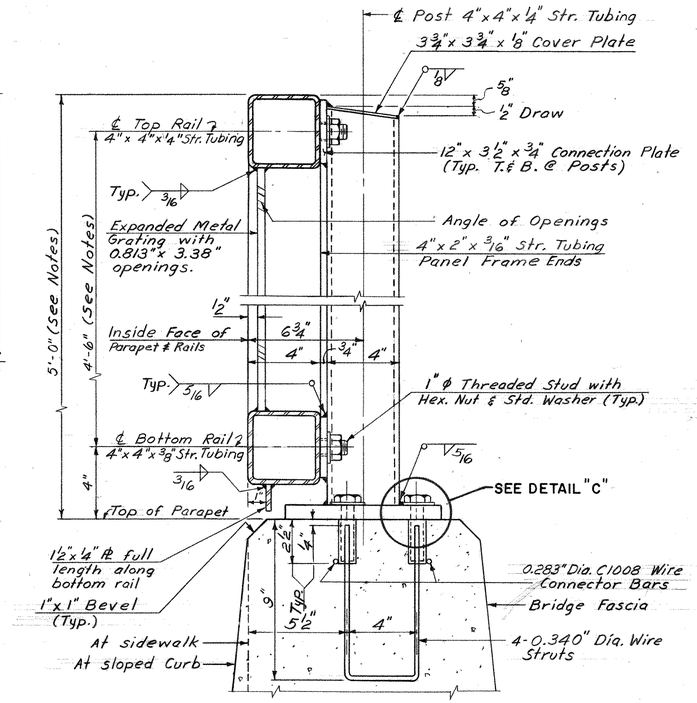

SECTION A-A
SCALE: 3" = 1'-0"

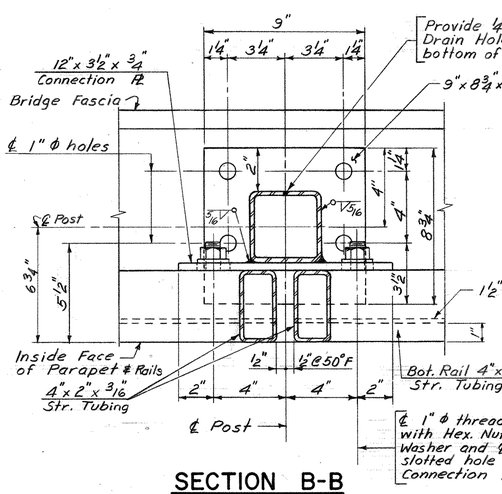

SECTION B-B
(EXPANDED METAL GRATING NOT SHOWN)
SCALE: 3" = 1'-0"

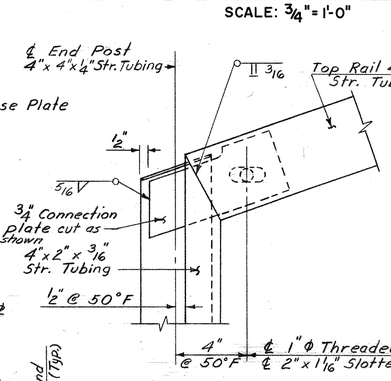

DETAIL "A"
SCALE: 3" = 1'-0"

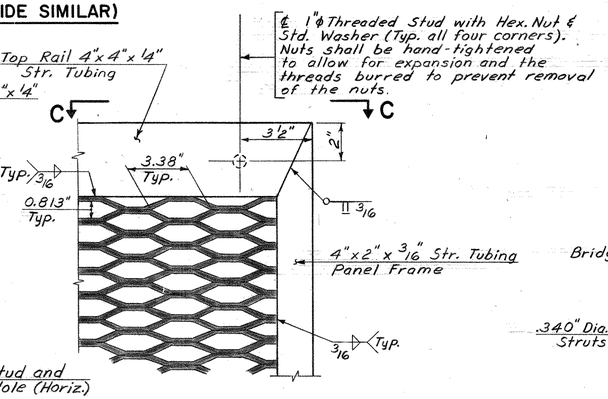

EXPANDED METAL GRATING DETAIL
SCALE: 3" = 1'-0"

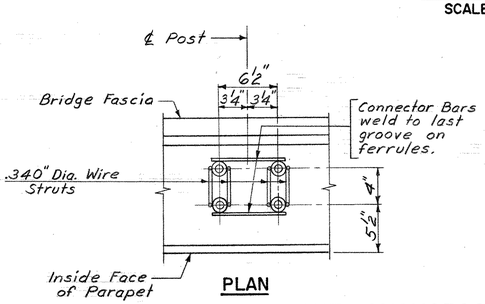

PLAN

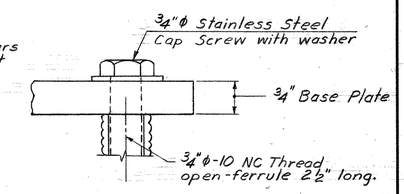

DETAIL "C"

PRESET ANCHORAGE DETAILS
NOT TO SCALE

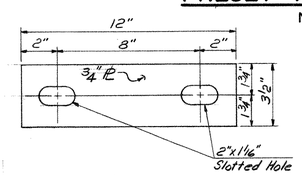

CONNECTION PLATE DETAIL
SCALE: 3" = 1'-0"

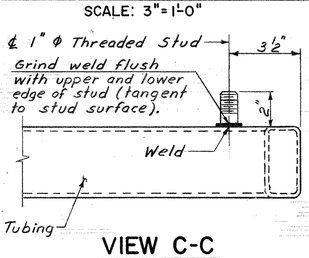

VIEW C-C
SCALE: 3" = 1'-0"

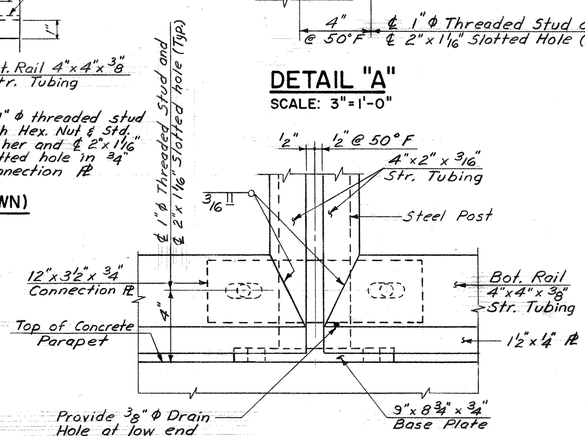

DETAIL "B"
(EXPANDED METAL GRATING NOT SHOWN)
SCALE: 3" = 1'-0"

Notes

For additional information, see special provision for "Metal Bridge Rail - Protective Fence (5'-0" High)".

All railing is to be fabricated and erected so that the rails are parallel to each other and to the parapet and the posts are truly vertical.

Since the finished railing must meet all requirements of fit, alignment and grade and verticality of post to the full satisfaction of the Engineer, it is suggested that complete field measurements be made before any shop fabrication is performed.

Dimension between top and bottom rails may be adjusted to fit the metal grating but shall not be less than 4'-6".

The fence material shall consist of carbon steel expanded metal grating with openings as indicated.

All structural tubing shall conform to the requirements of ASTM A501. All base plates, cover plates, connection plates, threaded studs and hex. nuts and washers shall conform to the requirements of ASTM A36. Stainless steel cap screws shall conform to the requirements of ASTM A193, Grade B8 with a minimum 75,000 P.S.I. tensile strength. Wire struts for the preset anchorage shall conform to ASTM A510, Grade 1034. Material for ferrules shall conform to ASTM A108, Grade 12 L14.

The cost of furnishing and installing the preset anchorage shall be included in the unit price per linear foot for contract item "Metal Bridge Rail-Protective Fence (5'-0" High)".
All steel except the stainless steel cap screws shall be galvanized after fabrication (See Special Provisions).

Exposed surfaces of posts, railing, connection plates, grating and anchorage material shall be free of burrs and sharp edges.

THIS SHEET NOT CORRECTED

CONNECTICUT
DEPARTMENT OF TRANSPORTATION
BUREAU OF HIGHWAYS

NEWINGTON

RECONSTRUCTION OF ROUTE 175 OVER PENN CENTRAL R.R. (NEW HAVEN LINE)

METAL BRIDGE RAIL-PROTECTIVE FENCE (5'-0" High)

NO.	DATE	DESCRIPTION

REVISIONS

ENGINEER C.E. MAGUIRE, INC.
APPROVED Joseph A. Yonem DATE 9-27-1973
DRAFTSMAN P.Z.J. CHECKER G.S.W. DESIGNER G.C.C.
STRUCTURE NO. 88-59-3 STRUCTURE SHEET 11 of 12

PUB ROAD DIV NO	STATE	TOWN	FED AID PROJ NO	PROJ NO	YEAR	ROUTE NO	SHEET NO.	TOTAL SHEETS
1	CONN.	NEWINGTON	88-59	88-59	1976	175	79	111

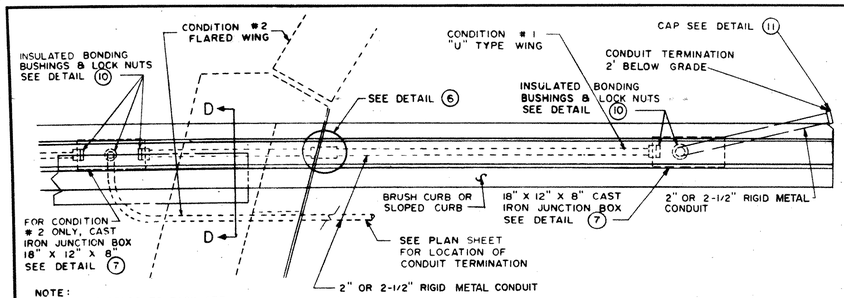

NOTE:
1. UTILIZE 30° BENDS TO FACILIATE CONDUIT LEAVING WINGWALL AT 2'-0" BELOW GRADE.
2. CONDUIT BENDS SHALL HAVE A RADIUS OF NOT LESS THAN 6 TIMES THE TRADE SIZE OF CONDUIT.

① CONDUIT PARAPET TO FILL
PLAN SCALE $\frac{1}{2}$" = 1'

NOTE:
CONDUIT AND FITTINGS TO BE ZINC COATED EXCEPTION OF DETAIL 11

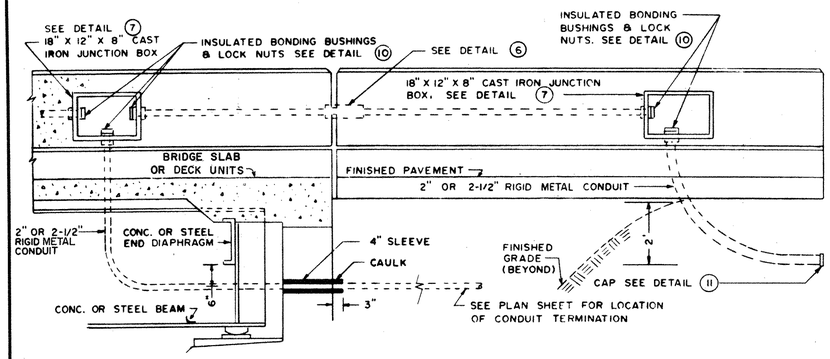

② CONDUIT PARAPET TO FILL
ELEVATION SCALE $\frac{1}{2}$" = 1'

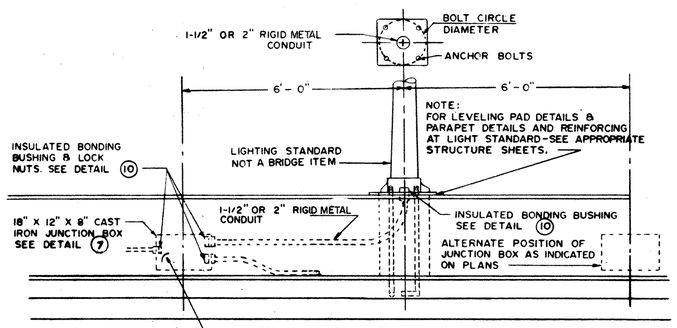

NOTE:
FOR PARAPET AND REINFORCING DETAILS AT JUNCTION BOX, SEE APPROPRIATE STRUCTURE SHEET.

③ LIGHTING STANDARD ON PARAPET WALL
SCALE $\frac{1}{2}$" = 1'

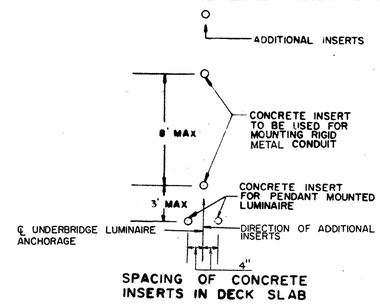

SPACING OF CONCRETE INSERTS IN DECK SLAB

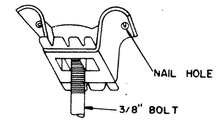

SPACING MAY BE ADJUSTED TO PROVIDE 1" CLEARANCE FROM REINFORCING BARS

④ CONCRETE INSERT DETAIL
NOT TO SCALE

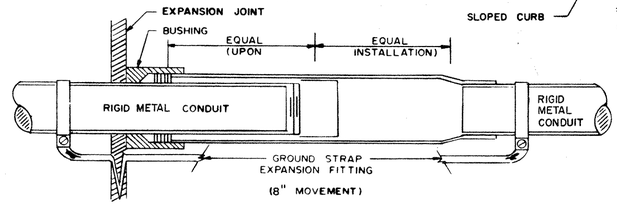

⑥ DETAIL OF EXPANSION FITTING
USE AT ALL EXPANSION JOINTS
NOT TO SCALE

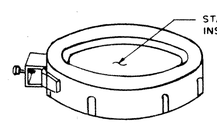

NOTE:
CAPPED BONDING BUSHINGS WITH GROUND CLAMP APPLIED AS NOTED

⑩ CAPPED INSULATED BONDING BUSHING WITH GROUND LUG
NOT TO SCALE

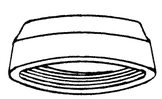

NOTE:
MALLEABLE IRON CAPS APPLIED AS NOTED

⑪ MALLEABLE IRON CAP
NOT TO SCALE

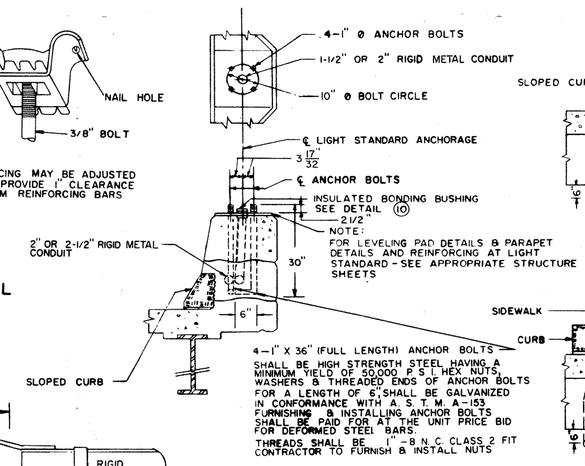

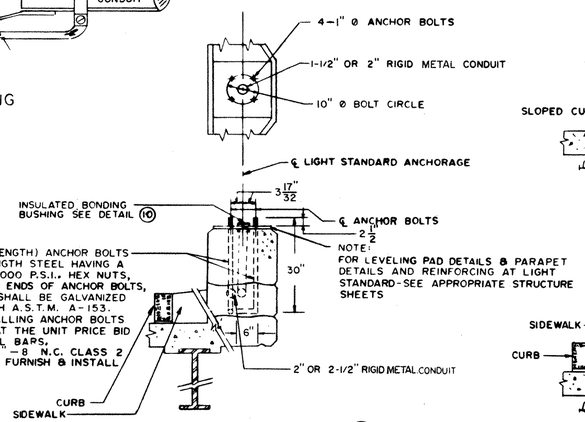

PARAPET TREATMENT AT LIGHTING STANDARD (USE APPLICABLE DETAIL)
NOT TO SCALE ⑤

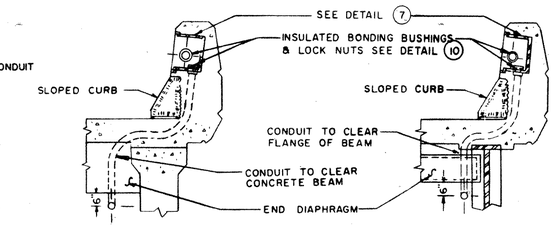

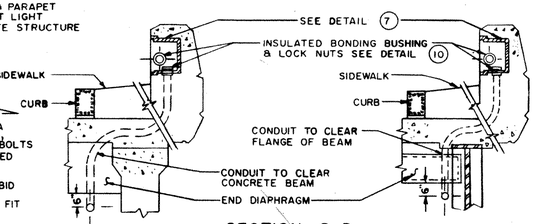

⑧ SECTION D-D
(USE APPLICABLE DETAIL)
NOT TO SCALE

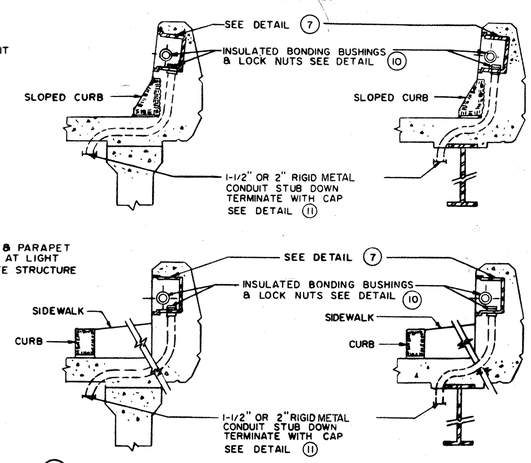

⑨ SERVICE TO LUMINAIRE UNDER STRUCTURE
(USE APPLICABLE DETAIL)
NOT TO SCALE

THIS SHEET NOT CORRECTED

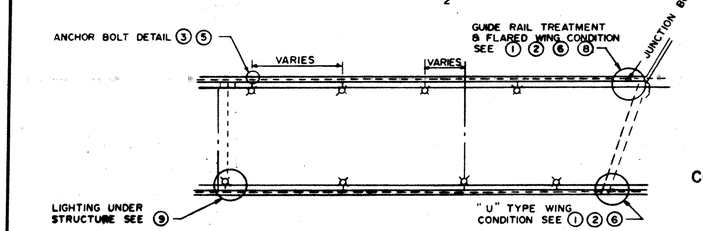

INDEX TO DETAILS
NOT TO SCALE

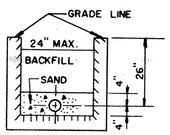

CONDUIT IN TRENCH
NO SCALE
(ROADWAY ITEM)
⑫

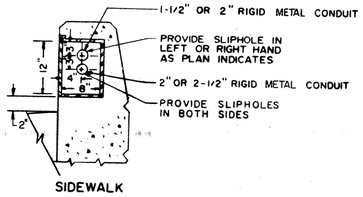

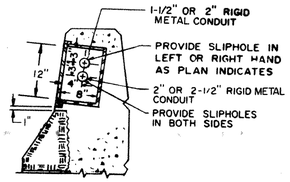

⑦ JUNCTION BOX INSTALLATION
(USE APPLICABLE DETAIL)
NOT TO SCALE

NOTE: FOR PARAPET AND REINFORCING DETAILS AT JUNCTION BOX, SEE APPROPRIATE STRUCTURE SHEET.

ABBREVIATIONS & TERMS	
℄ L.S.A.	– ℄ LIGHT STANDARD ANCHORAGE
R.M.C. (TR)	– RIGID METAL CONDUIT IN TRENCH
R.M.C. (STR)	– RIGID METAL CONDUIT IN STRUCTURE
C.I.J.B.	– CAST IRON JUNCTION BOX
℄ U.L.A.	– ℄ UNDERBRIDGE LUMINAIRE ANCHORAGE
R.M.C. (SD)	– RIGID METAL CONDUIT STUB DOWN

* NOTE: FOR DETAILS THAT APPLY ONLY

	DET. NO.	DESCRIPTION
*	1	CONDUIT PARAPET TO FILL
*	2	CONDUIT PARAPET TO FILL
	3	LIGHTING STANDARD ON PARAPET WALL
	4	CONCRETE INSERT
	5	PARAPET TREATMENT AT LIGHT STANDARD
*	6	DETAIL OF EXPANSION FITTING
*	7	JUNCTION BOX INSTALLATION
	8	SECTION D-D
	9	SERVICE TO LUMINAIRE UNDER STRUCTURE
*	10	CAPPED INSULATED BONDING BUSHING WITH GROUND LUG
*	11	MALLEABLE IRON CAP
	12	CONDUIT IN TRENCH

CONNECTICUT
DEPARTMENT OF TRANSPORTATION
BUREAU OF HIGHWAYS

NEWINGTON

RECONSTRUCTION OF ROUTE 175
OVER
PENN CENTRAL R.R. (NEW HAVEN LINE)

ELECTRICAL DETAILS

ENGINEER: ELECTRICAL DESIGN SECTION
APPROVED DATE
DRAFTSMAN CHECKER DESIGNER
STRUCTURE NO. 88-59-3 STRUCTURE SHEET 12 OF 12

88 59 474 01 74 (3)