NOTICE TO CONTRACTOR – RAILROAD SPECIFICATIONS

The Contractor is hereby notified that the attached document entitled "Specifications Relating to Working Within the Premises of Pan Am Railways / Springfield Terminal Railway Co." shall be made a part of this contract, and that the Contractor shall be bound to comply with all applicable requirements of such specifications. The requirements and conditions set forth in the subject specifications shall be binding on the Contractor just as any other specification would be.

Costs associated with work provided by the railroad, including engineering review, construction safety inspections, and flagmen, will be paid under Item #0504009 – Railroad Protection.

The Contractor shall coordinate all proposed work located within the railroad right-of-way, as well as construction submittals and responses, with the following representative:

Mr. Dillon O'Toole, Project Engineer
Pan Am Railways
1700 Iron Horse Park
Billerica, MA 01862
(978) 663-1077
dotoole@panam.com

Standard Railroad Specifications

Pan Am Railways/
Springfield Terminal Railway Company
Engineering Department

Office of Vice President Engineering
N. Billerica, Massachusetts
Date: 01/2011

SPECIFICATIONS RELATING TO WORKING WITHIN PREMISES OF PAN AM RAILWAYS / SPRINGFIELD TERMINAL RAILWAY CO.

No other section of the Project Specifications shall supersede or modify this Section entitled: SPECIFICATIONS RELATING TO WORK WITHIN PREMISES USED AND CONTROLLED BY PAN AM RAILWAYS / SPRINGFIELD TERMINAL RAILWAY COMPANY.

1. DEFINITIONS:

1.1 Railroad: The work "Railroad" means Pan Am Railways and the Springfield Terminal Railway Company, their successors or assigns and their officers, agents and servants.

1.2 Owner: The word "Owner" means the individual, utility, government, or corporation who has title to the structure to be constructed upon property owned, controlled, or adjacent to the Railroad.

1.3 Utility: The work "Utility" includes public or private communication, water, sewer, electric, gas and petroleum companies.

1.4 Government: The work "Government" includes State, Town, City, County and other forms of Municipal Government.

1.5 Corporation: The word "Corporation" shall mean any firm duly incorporated under laws of a State Government.

1.6 Individual: The work "Individual" shall mean any party, which is not defined by 1.3, 1.4, or 1.5.

1.7 Contractor: The work "Contractor" means the individual, partnership, firm, corporation or any combination thereof, or joint venture, contracting with either a Utility, Government, Corporation or Individual, for work to be done on Railroad Property.

1.8 Owner or it's Contractor: The term "Owner or its Contractor" as used in these specifications shall not affect the responsibilities of each party as set forth in the Project Specifications.

1.9 Chief Engineering Officer of the Railroad: The Vice President of Engineering or Chief Engineer-Design and Construction or their authorized representatives at the Railroad.

2. SCOPE:

These specifications intend to provide for safeguards to the property owned or controlled by the Railroad and to its operations upon that property during construction operations by the Owner or its Contractor.

3. GENERAL:

3.1 Before entering upon Railroad premises or property used and controlled by the Railroad:

3.1.1 The Owner or its Contractor shall fully inform himself of all requirements of the Railroad as pertains to the specific project and shall conduct all his work accordingly. Any questions relating to the requirements of the Railroad should be directed to the representative of the Chief Engineer-Design and Construction at the Operating Railroad.

3.1.2 The Owner or its Contractor shall execute the Railroad's Standard Service Contract, and shall provide the Real Estate Department of the Railroad the insurance specified under Section 8.

3.1.3 The Owner or its Contractor shall take note that if an excavation is to be made within a 2 to 1 slope line commencing 3 feet from the end of tie, he shall submit for approval by the Chief Engineering Officer of the Railroad, his proposed method of preventing the soil from running.

3.1.4 The Owner or its Contractor shall furnish detailed plan, for falsework, bracing, sheeting, or other supports adjacent to the tracks for approval by the Chief Engineering Officer of the Railroad, and the work shall be performed in accordance with the approved plans. All plans and calculations shall be stamped by a Professional Engineer registered in the State in which the work is to be performed.

3.1.5 The Owner or its Contractor shall furnish to the Chief Engineering Office of the Railroad for approval complete sequence and plans with sufficient detail for checking, for the installation of, temporary supporting or removal of all members or structures above track. All such work shall be performed in

accordance with the approved plans and specifications. All plans and calculations shall be stamped by a Professional Engineer registered in the State in which the work is to be performed.

3.1.6 The Owner or its Contractor shall give written notice to the representative of the Chief Engineer-Design and Construction of the Railroad at the headquarters of the Operating Railroad at least seven (7) days in advance of starting work or locating equipment at the site. In addition, the Contractor shall give notice on the Wednesday prior to the week he proposed to do work which might cause any hazard, as described under Sections 4.

3.1.7 The Owner or its Contractor shall make all necessary arrangements with the Railroad before entering upon Railroad premises, or Property used and controlled by the Railroad.

3.1.8 The Owner or its Contractor shall at all times be aware that the Railroad may at any time withhold entry due to lack of flagging and/or inspection personnel.

3.2 After entering upon Railroad premises or property used and controlled by the Railroad.

3.2.1 The Owner or its Contractor shall have in his possession on the job site the contract plans and specifications, which bear the stamp of approval of the Railroad's Engineer of Design. The Owner or its Contractor shall conduct all his work according to these plans and specifications.

3.2.2 All work shall be performed and completed in a manner fully satisfactory to the Railroad's Chief Engineering Officer or his authorized representatives. Railroad inspection of the work shall be permitted at all times and the Owner of its Contractor shall cooperate fully with the Railroad representatives.

3.2.3 All equipment used by the Owner or its Contractor on Railroad premises or property used and controlled by the Railroad may be inspected by the Railroad and shall not be used if considered unsatisfactory by the Railroad's representative. Equipment of the Owner or its Contractor to be used adjacent to tracks shall be in first class condition so as to positively prevent

any failure that world cause delay in the operation of trains or damage to Railroad facilities. Equipment shall not be placed or put into operation adjacent to a track without first obtaining the permission of the Railroad.

3.2.4 Operators of such equipment may be examined by the Railroad representative to determine their fitness. If it is determined that they are unfit to work then the owner or its Contractor shall remove them from service.

3.2.5 Cranes used for lifting loads over Railroad property shall be rated at 150% of the load based on the crane manufacturer's load chart.

3.2.6 If the Chief Engineering Officer of the Railroad deems it necessary, the Owner or its Contractor shall furnish and erect in close proximity to the site of the work a suitable, furnished shelter with lights, heat, telephone, etc., exclusively for Railroad personnel mentioned previously.

3.2.7 The Owner or its Contractor's work shall be performed in such manner that the tracks, traffic and appurtenances of the Railroad will be safeguarded. He shall ascertain and comply with the requirements of the Railroad relative to his work on or adjacent to Railroad premises and except as permitted, he shall keep the tracks clear of obstruction.

3.2.8 Open excavations shall be suitable planked over when construction operations are not in progress.

3.2.9 Blasting will be permitted under or adjacent to tracks only after proof that blasting is required and all methods have been submitted to and approved by the Railroad's Chief Engineering Officer.

3.2.10 The Owner or its Contractor shall be fully responsible for all damages arising from his failure to comply with the requirements of these specifications.

3.2.11 If the specifications of the Railroad and the Consulting firm differ, then that which is more stringent shall prevail.

4. HAZARDS:

4.1 The Contractor's attention is called to the fact that the work under the Contract shall be performed adjacent to Main Line track, telephone lines, telegraph lines, signal lines and electric supply lines of the Railroad. A maximum speed of about __ miles per hour will be considered as prevailing for the operation of trains of the Railroad at this project.

4.2 An operating track shall be considered fouled and subject to hazard when any object or operation is or can be brought nearer than 15 feet to the centerline of the track. Specific site conditions may increase this dimension at the discretion of the Chief Engineer or his authorized representative.

4.3 A signal line or communication line shall be considered fouled and subject to hazard when any object is brought nearer than 4 feet to any wire or cable.

4.4 An electrical supply line shall be considered fouled and subject to hazard when any object is brought nearer than 10 feet to any wire of the line.

4.5 Cranes, trucks, power shovels, or any other equipment shall be considered as fouling a track, signal line, communication line, or electric supply line when working a position that failure of equipment with or without load could foul the track, signal line, communication line or electric supply line.

4.6 Railroad operations will be considered subject to hazard when explosives are used in the vicinity of Railroad premises, during the driving or pulling of sheeting for footings adjacent to a track, when erecting structural steel across or adjacent to a track, when operations involve swinging booms or chutes that could in any way come nearer than 15 feet to the center line of a track or wire line. None of these or similar operations, therefore, shall be carried on during the approach or passing to a train.

4.7 When, in the opinion of the Chief Engineering Officer of the Railroad or his representative the construction work would cause hazard to the safe operation of trains or to other Railroad facilities including any communication lines on Railroad premises, the Railroad will employ the necessary qualified employees to protect its trains and other facilities.

5. CLEARANCES:

Staging, falsework, or forms shall at all times be maintained with a minimum vertical clearance of 22'-6" above top of the rail and a minimum side clearance of 10'-0" from the center line of track, unless otherwise approved by the Railroad.

6. PROTECTION/INSPECTION SERVICES:

6.1 If deemed necessary by the Chief Engineering Officer of the Railroad the Railroad will furnish and assign an engineer(s) or inspector(s) for general inspection purposes or for general protection of Railroad property and operations during construction. Prior to start of any work on the Railroad, the Owner or its Contractor shall submit a deposit in the amount required by the Railroad. The Railroad may request additional deposits if projected expenses exceed the initial deposit amount. If the Railroad expenses are less than the amount of deposit, the Railroad will refund the balance to the Owner or its Contractor, after receipt of a written request. The Railroad will provide at its sole discretion such personnel, as it deems necessary or advisable because of the project. The Railroad reserves the right to request additional deposits as project work progresses. All checks are to be made out to the Operating Railroad.

6.2 If the Railroad determines that flagmen are necessary, the number required shall be on duty at the site during the hours of hazard described under Section 4. No work shall be performed if flagmen are required but not on duty.

6.3 It shall be the responsibility of the Owner or its Contractor to keep the Railroad informed at all times, and prior to such times, when the Owner or its Contractor shall be working on, above, or adjacent to

the Railroad creating the hazards described under Section 4. Failure of the Owner or its Contractor to give the Railroad suitable advance notice of hazardous operation shall result in the stoppage of the Owner's or its Contractor's work by the Railroad, until such time as sufficient number of flagmen are on duty at the site.

7. EXTRA-CONTRACT SERVICES:

7.1 Temporary and permanent changes of tracks and telephone lines, telegraph lines, signal lines, and electric supply lines made necessary by or to clear the permanent work of the Contractor will be made or caused to be made by the Railroad at the expense of the Owner or its Contractor.

7.2 All other changes made or services furnished by the Railroad, at the request of the Owner or its Contractor will be at the Owner's or its Contractor's expense.

8. INSURANCE:

8.1 At his sole expense the Owner or its Prime Contractor shall obtain, prior to working adjacent to Railroad premises and entry upon Railroad premises and keep in force during entire term of the work and for six (6) months subsequent to completion of work the following amounts and kinds of insurance. All policies shall be written for a minimum of one (1) year.

(A) Work on Pan Am Railways Property:

1. Contractors Public Liability - $5,000,000/$10,000,000

2. Contractors Property Damage Liability - $5,000,000/$10,000,000

3. The named insured shall be written exactly as follows: "Maine Central Railroad Co. and The Springfield Terminal Railway Company, their affiliates, successors and assigns,c/o Pan Am Railways, Iron Horse Park, North Billerica, Massachusetts 01862."

(B) Work on MBTA Property or other property where MBTA passenger service is operated:

1. Contractors Public Liability - $5,000,000/$10,000,000

2. Contractors Property Damage Liability - $5,000,000/$10,000,000

3. The named insured shall be written exactly as follows: "Pan Am Railways and The Springfield Terminal Railway Company, their affiliates, successors and assigns, and the Massachusetts Bay Transportation Authority."

The insurance shall be a Railroad Protective Liability Policy in a form acceptable to the Railroad.

The ORIGINAL insurance policy shall be furnished to the Real Estate Department of the Railroad at least ten (10) days prior to commencement of work. The Railroad shall have the right to increase the limits of liability for both public liability and property damage during the life of the agreement.

9. EXCAVATION:

9.1 The Owner or its Contractor shall furnish detail plans for falsework, bracing, shoring, sheeting, or other supports for excavation adjacent to the tracks to the Chief Engineering Officer of the Railroad for approval. The work shall be performed in accordance with the approved plans. No approval shall be given until the advance deposit (Item 6.1) has been received.

9.2 Open excavations shall be suitably planked over when construction operations are not in progress.

9.3 As excavation approaches pipes, conduits, or other underground structures on or adjacent to Railroad property, digging by machinery shall be discontinued and the excavation shall continue by means of hand tools.

9.4 All existing pipes, poles, wires, fences, property line markers, and other structures, which the Railroad's Chief Engineering Officer decides must be preserved in place without being temporarily or permanently relocated shall be carefully protected for damage by the Owner or its Contractor. Should such items be damaged, they shall be restored by the Railroad, at the Owner's or its Contractor's sole

expense, to at least as good condition as that in which they were found immediately before the work was begun.

9.5 If any excavation is taken beyond the work limit indicated on the approved plans or prescribed herein, the Owner or its Contractor shall backfill and compact as prescribed herein at his own expense.

9.6 The Railroad IS NOT a Dig Safe member utility. The Owner or its Contractor must contact the Railroad to have sub surface Railroad utility lines marked out prior to any excavation on Railroad property. The Owner or its Contractor will conduct all work so as to carefully protect Railroad utilities and will be responsible for all costs incurred to repair or replace Railroad utilities that are damaged.

10. BACKFILL:

10.1 Material

The material shall consist of stones, rock fragments and fine, hard durable particles resulting from the natural disintegration of rock. The material shall be free from injurious amounts of organic matter. The wear shall be not more than 60 percent. The material shall consist of a mixture of stones or rock fragments and particles with 95 to 100 percent passing the 3 inch sieve and 25 to 70 percent passing the No. 4 sieve. Not more than 15 percent of the material passing the No. 4 sieve shall pass the No. 200 sieve.

10.2 Backfilling

10.2.1 All backfill material adjacent to a pipe shall be approved soil. Backfill material shall be free from hard lumps and clods larger than 3-inch diameter, and free from large rocks or stumps. Uniformly fine material shall be placed next to any pipe liable to dent or break.

10.2.2 All backfill material shall be compacted at near optimum moisture content, in layers not exceeding 6 inches in compacted thickness by pneumatic tampers, vibrator compactors, or other approved means to the base of the Railroad subgrade. Care shall be

exercised to thoroughly compact the backfill under the haunches of the pipe to insure that the backfill soil is in intimate contact with the side of the pipe. Fill at the sides of the pipe may be compacted by rolling or operating heavy equipment parallel with the culvert, provided care is taken to avoid displacement or injury of the pipe. Material in the vicinity of pipes shall be compacted to not less than 95 percent of AASHO T 99, Method C. The Contractor will be required to supply, to the job site, ballast stone as prescribed herein to be installed by the Railroad.

10.3 The Owner or its Contractor shall provide testing, if requested by the Railroad, through the use of a testing lab or Professional Engineer registered in the State in which the work is performed, to insure that the in place density of the backfill meets or exceeds the requirements of Section 10.2.2. Written certification of the tests shall be given to the Railroad immediately upon completion of the test.

All Items Not addressed by the Pan Am Railways/ Springfield Terminal Railway Company's Standard Railroad Specifications shall conform to the latest specifications set forth in the American Railway Engineering and Maintainence of Way Association's Manual for Railway Engineering.

10.3 Certification

The Owner or its Contractor shall provide testing, through the use of a testing lab or Professional Engineer registered in the State in which the work is performed, to insure that the in place density of the backfill meets or exceeds the requirements of Section 10.2.2. Written certification of the tests shall be given to the Railroad immediately upon completion of the test.

11. BALLAST STONE

11.1 Material

Ballast shall consist of crushed stone with zero to fifteen percent passing a 1" screen, ninety to one hundred percent passing a 1.5" screen and one hundred percent passing a 2" screen.

11.2 Installation

The ballast stone shall be installed by Railroad forces according to Railroad Standards.

12. STEEL SLEEVE REQUIREMENTS FOR JACKING OPERATIONS

12.1 The outside diameter of the casing pipe shall be a minimum of thirty-six (36) inches (900 mm) with a minimum of six (6) inches (150 mm) greater than the largest outside diameter of the carrier pipe, joints or coupling.

12.2 The casing pipe shall be designed to withstand Coopers E-80 Railroad loading. Refer to the table below for nominal minimum thickness of steel sleeve required for a specific casing pipe diameter.

DIAMETER (inch)	DIAMETER (mm)	THICKNESS (inch)	THICKNESS (mm)
36	850 - 900	0.532	14
38 - 44	950 - 1100	0.569	15
46 - 50	1150- 1250	0.688	18
52 - 54	1300- 1350	0.813	21
60 - 66	1500- 1650	0.876	22
>66	>1676	investigate use of steel liner plate	

12.3 The casing pipe shall have a minimum yield strength of 35,000 psi (241325 kpa) and conform to the latest revisions of the requirements of A.W.A. Standards for fabricating electrically welded steel water pipes or its equivalent.

12.4 Method of Installation

12.4.1 The Owner or its Contractor shall submit to the Chief Engineering Officer, data and information demonstrating that he or his subcontractor has had successful previous experience in jacking in similar circumstances.

12.4.2 Before any work is begun within the limits of jacking the Owner or its Contractor shall have assembled all tools, materials and equipment which will be required. When the Owner or its Contractor has started the jacking operation, he will proceed in a continuous operation without stopping. This will minimize the tendency of the material to freeze around the pipe.

12.4.3 A jacking shield shall be used and jacked ahead of the casing pipe. The excavation within the jacking pipe should not advance beyond the head of the pipe shield. If the stability at the face needs to be maintained from raveling or running soil, suitable temporary bulkheads, struts and bracing shall be required. After completion of the sleeve installation the anular space around it shall be completely grouted with cement grout under pressure.

12.5 Method of Joining Casing Pipe Ends

The casing pipe shall be jacked without being welded through the use of a collar plate as shown on the sheet entitled, "Method of Jacking and Joining the Steel Sleeve Sections". Upon completion of the jacking operation either the continuous butt weld will be performed or a continuous interior collar plate is to be provided as shown.

Alternate Method:

Casing pipe ends shall be beveled with a single V-groove for field welding. Pipe joints shall be butt welded and shall be a full penetration on the outside circumference of the pipe. The single V-groove butt weld shall conform to the latest A.W.S. Welding Code. All joints of the casing pipe shall be butt welded, by a certified welder, prior to being subject to the jacking operation.

13. GROUND STABILIZATION

If required, it shall be done to the soil prior to the start of jacking. Stabilization shall be by either dewatering or grouting or combination of both to maintain the stability of the face of the heading.

13.1 Dewatering

The Owner or its contractor shall lower and maintain the ground water level a minimum of 2 feet below the invert at all times during construction by well points, vacuum well points, or deep wells to prevent inflow of water or water and soil into the heading. Ground water observation wells shall be installed in the area to be dewatered to demonstrate that the dewatering requirements are being complied with.

13.2 Grouting

The grouting contractor shall be a specialist in the field with a minimum of five (5) continuous years of successfully grouting soils. All granular soils (silty sands, sand or sand and gravel) shall be stabilized by injection of a cement or chemical grout from the ground surface or from the pipe heading. The stabilization shall extend as far as necessary outside the periphery of the casing pipe in order to maintain a stable face at the heading.

13.3 Knowing that dewatering can cause settlement, it will be necessary that Railroad forces survey the crossing prior to, during and after construction. If it is found the tracks need to be aligned and surfaced by the Railroad forces because of the construction, the cost of this shall be borne by the Owner, or if so designated, by the Owner's Contractor.

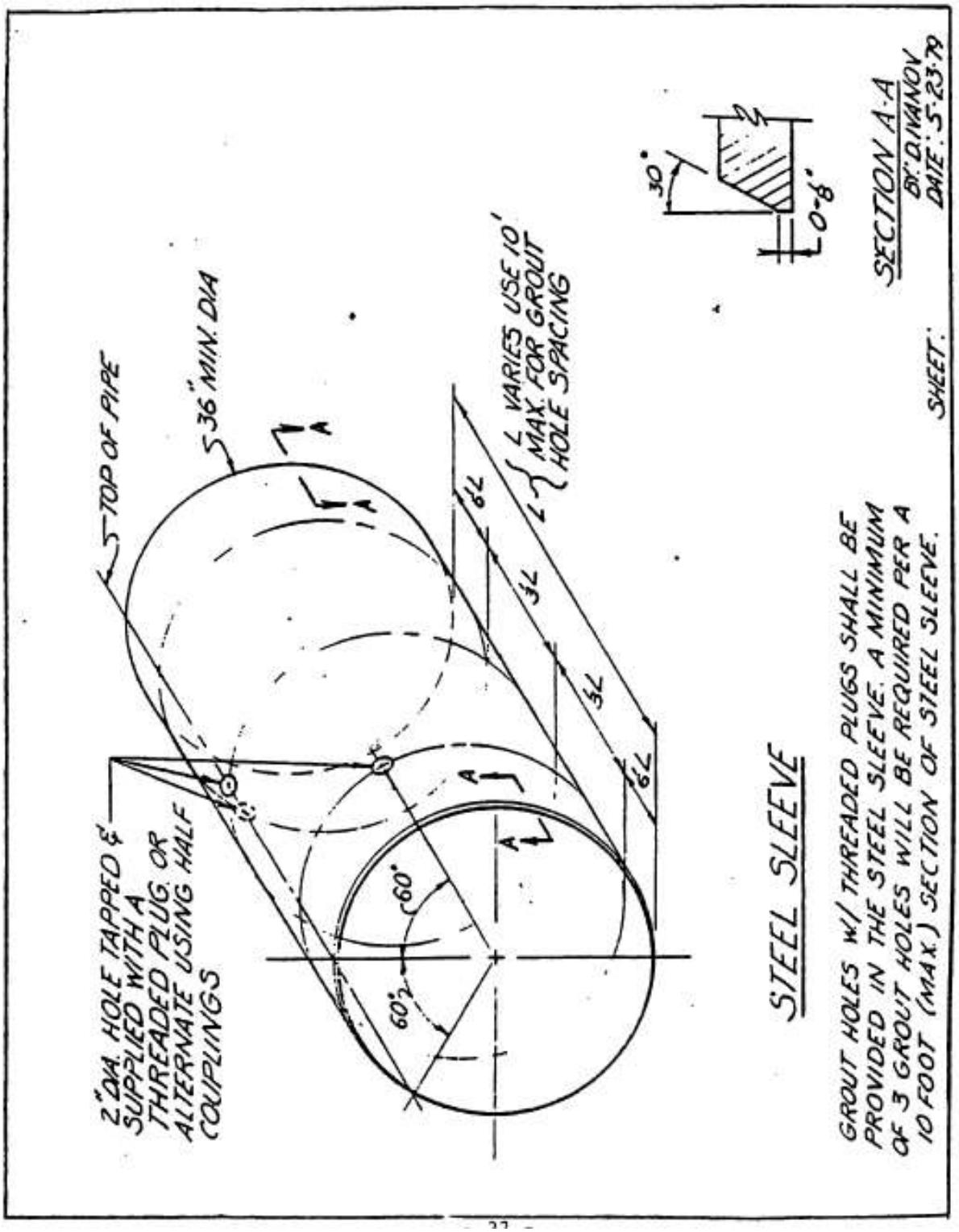
TOP OF PIPE
36" MIN. DIA
2" DIA. HOLE TAPPED & SUPPLIED WITH A THREADED PLUG, OR ALTERNATE USING HALF COUPLINGS
60°
60°
A
A
A
A
L VARIES USE 10' MAX. FOR GROUT HOLE SPACING
L
3L
3L
3L
3L
30°
0-8"
SECTION A-A
BY: D. IVANOV
DATE: 5-23-79
SHEET:
STEEL SLEEVE
GROUT HOLES W/ THREADED PLUGS SHALL BE PROVIDED IN THE STEEL SLEEVE. A MINIMUM OF 3 GROUT HOLES WILL BE REQUIRED PER A 10 FOOT (MAX.) SECTION OF STEEL SLEEVE.

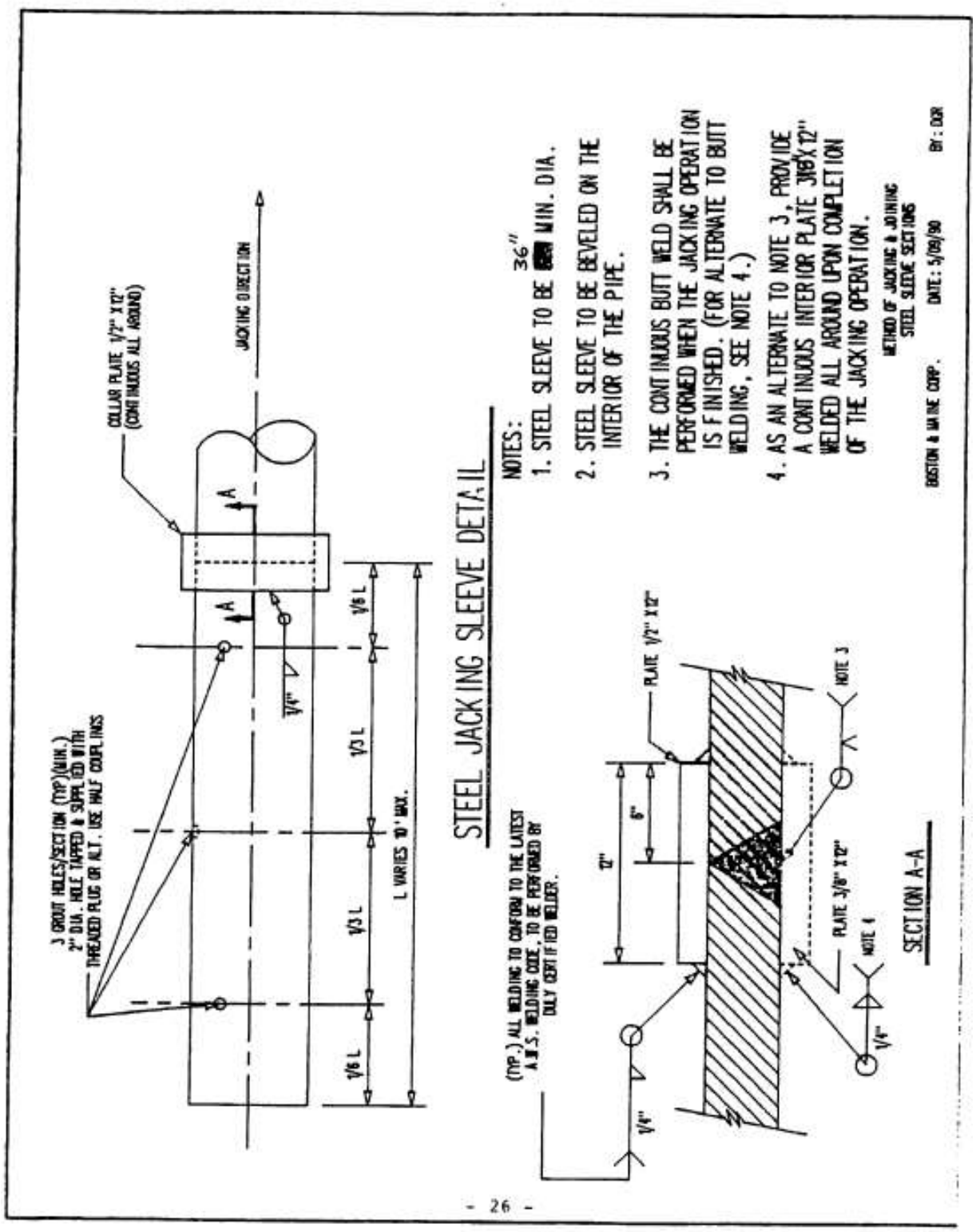
COLLAR PLATE 1/2" X 12" (CONTINUOUS ALL AROUND)
JACKING DIRECTION
3 GROUT HOLES/SECTION (TYP)(MIN.) 2" DIA. HOLE TAPPED & SUPPLIED WITH THREADED PLUG OR ALT. USE HALF COUPLINGS
1/4"
1/6 L
1/3 L
1/3 L
1/6 L
L VARIES TO 1' MAX.
STEEL JACKING SLEEVE DETAIL
NOTES:
1. STEEL SLEEVE TO BE 36" MIN. DIA.
2. STEEL SLEEVE TO BE BEVELED ON THE INTERIOR OF THE PIPE.
3. THE CONTINUOUS BUTT WELD SHALL BE PERFORMED WHEN THE JACKING OPERATION IS FINISHED. (FOR ALTERNATE TO BUTT WELDING, SEE NOTE 4.)
4. AS AN ALTERNATE TO NOTE 3, PROVIDE A CONTINUOUS INTERIOR PLATE 3/8"X12" WELDED ALL AROUND UPON COMPLETION OF THE JACKING OPERATION.
(TYP.) ALL WELDING TO CONFORM TO THE LATEST A.W.S. WELDING CODE, TO BE PERFORMED BY DULY CERTIFIED WELDER.
PLATE 1/2" X 12"
12"
6"
NOTE 3
PLATE 3/8" X 12"
NOTE 4
1/4"
SECTION A-A
METHOD OF JACKING & JOINING STEEL SLEEVE SECTIONS
BOSTON & MAINE CORP.
DATE: 5/09/90
BY: DOR