SECTION 4.06 BITUMINOUS CONCRETE

Section 4.06 is being deleted in its entirety and replaced with the following:

4.06.01—Description
4.06.02—Materials
4.06.03—Construction Methods
4.06.04—Method of Measurement
4.06.05—Basis of Payment

4.06.01—Description: Work under this section shall include the production, delivery, placement, and compaction of an uniform textured, non-segregated, smooth bituminous concrete pavement to the grade and cross section shown on the plans.

The terms listed below as used in this specification are defined as:

Bituminous Concrete: A composite material consisting of prescribed amounts of asphalt binder, and aggregates. Asphalt binder may also contain additives engineered to modify specific properties and/or behavior of the composite material. References to bituminous concrete apply to all of its forms, such as those identified as hot-mix asphalt (HMA),or polymer-modified asphalt (PMA).

Bituminous Concrete Plant (Plant): A structure where aggregates and asphalt binder are combined in a controlled fashion into a bituminous concrete mixture suitable for forming pavements and other paved surfaces.

Course: A continuous layer (a lift or multiple lifts) of the same bituminous concrete mixture placed as part of the pavement structure.

Density Lot: The total tonnage of all bituminous concrete placed in a single lift and as defined in Article 4.06.03.

Disintegration: Erosion or fragmentation of the pavement surface which can be described as polishing, weathering-oxidizing, scaling, spalling, raveling, or formation of potholes.

Dispute Resolution: A procedure used to resolve conflicts between the Engineer and the Contractor's test results that may affect payment.

Hot Mix Asphalt (HMA): A bituminous concrete mixture typically produced at 325°F.

Job Mix Formula (JMF): A recommended aggregate gradation and asphalt binder content to achieve the required mixture properties.

Lift: An application of a bituminous concrete mixture placed and compacted to a specified thickness in a single paver pass.

Percent Within Limits (PWL): The percentage of the lot falling between the Upper Specification Limit (USL) and the Lower Specification Limit (LSL).

Polymer-Modified Asphalt (PMA): A bituminous concrete mixture containing a polymer modified asphalt binder and using a qualified warm mix technology.

Production Lot: The total tonnage of a bituminous concrete mixture from a single source that may receive an adjustment.

Production Sub Lot: Portion of the production lot typically represented by a single sample.

Quality Assurance (QA): All those planned and systematic actions necessary to provide ConnDOT the confidence that a Contractor will perform the work as specified in the Contract.

Quality Control (QC): The sum total of activities performed by the vendor (Producer, Manufacturer, and Contractor) to ensure that a product meets contract specification requirements.

Superpave: A bituminous concrete mix design used in mixtures designated as "S*" Where "S" indicates Superpave and * indicates the sieve related to the nominal maximum aggregate size of the mix.

Segregation: A non-uniform distribution of a bituminous concrete mixture in terms of gradation, temperature, or volumetric properties.

Warm Mix Asphalt (WMA) Technology: A qualified additive or technology that may be used to produce a bituminous concrete at reduced temperatures and/or increase workability of the mixture.

4.06.02—Materials: All materials shall conform to the requirements of Section M.04.

1. Materials Supply: The bituminous concrete mixture must be from one source of supply and originate from one Plant unless authorized by the Engineer.

2. Recycled Materials: Reclaimed Asphalt Pavement (RAP), Crushed Recycled Container Glass (CRCG), Recycled Asphalt Shingles (RAS), or crumb rubber (CR) from recycled tires may be incorporated in bituminous concrete mixtures in accordance with Project Specifications.

4.06.03—Construction Methods:

1. Material Documentation: All vendors producing bituminous concrete must have Plants with automated vehicle-weighing scales, storage scales, and material feeds capable of producing a delivery ticket containing the information below.

a. “State of Connecticut” printed on ticket.
b. Name of producer, identification of Plant, and specific storage silo if used.
c. Date and time.
d. Mixture Designation; Mix type and level Curb mixtures for machine-placed curbing must state "curb mix only".
e. If WMA Technology is used, the additive name and dosage rate or water injection rate must be listed.
f. Net weight of mixture loaded into the vehicle (When RAP and/or RAS is used the moisture content shall be excluded from mixture net weight).
g. Gross weight (equal to the net weight plus the tare weight or the loaded scale weight).
h. Tare weight of vehicle (Daily scale weight of the empty vehicle).
i. Project number, purchase order number, name of Contractor (if Contractor other than Producer).
j. Vehicle number - unique means of identification vehicle.
k. For Batch Plants, individual aggregate, recycled materials, and virgin asphalt max/target/min weights when silos are not used.
l. For every mixture designation the running daily total delivered and sequential load number.

The net weight of mixture loaded into the vehicle must be equal to the cumulative measured weights of its components.

The Contractor must notify the Engineer immediately if, during production, there is a malfunction of the weight recording system in the automated Plant. Manually written tickets containing all required information will be allowed for no more than one hour.

The State reserves the right to have an inspector present to monitor batching and /or weighing operations.

2. Transportation of Mixture: The mixture shall be transported in vehicles that are clean of all foreign material, excessive coating or cleaning agents, and, that have no gaps through which mixture might spill. Any material spilled during the loading or transportation process shall be quantified by re-weighing the vehicle. The Contractor shall load vehicles uniformly so that segregation is minimized. Loaded vehicles shall be tightly covered with waterproof covers acceptable to the Engineer. Mesh covers are prohibited. The cover must minimize air infiltration. Vehicles found not to be in conformance shall not be loaded.

Vehicles with loads of bituminous concrete being delivered to State projects must not exceed the statutory or permitted load limits referred to as gross vehicle weight (GVW). The Contractor shall furnish a list and allowable weights of all vehicles transporting mixture.
The State reserves the right to check the gross and tare weight of any vehicle. If the gross or tare weight varies from that shown on the delivery ticket by more than 0.4 percent, the Engineer will recalculate the net weight. The Contractor shall correct the discrepancy to the satisfaction of the Engineer.

If a vehicle delivers mixture to the project and the delivery ticket indicates that the vehicle is overweight, the load may not be rejected but a "Measured Weight Adjustment" will be taken in accordance with Article 4.06.04.

Vehicle body coating and cleaning agents must not have a deleterious effect on the mixture. The use of solvents or fuel oil, in any concentration, is prohibited for the coating of vehicle bodies.

For each delivery, the Engineer shall be provided a clear, legible copy of the delivery ticket.

3. Paving Equipment: The Contractor shall have the necessary paving and compaction equipment at the project site to perform the work. All equipment shall be in good working order and any equipment that is worn, defective or inadequate for performance of the work shall be repaired or replaced by the Contractor to the satisfaction of the Engineer. During the paving operation, the use of solvents or fuel oil, in any concentration, is prohibited as a release agent or cleaner on any paving equipment (i.e., rollers, pavers, transfer devices, etc.).

Refueling or cleaning of equipment is prohibited in any location on the project where fuel or solvents might come in contact with paved areas or areas to be paved. Solvents used in cleaning mechanical equipment or hand tools shall be stored off of areas paved or to be paved.

Pavers: Each paver shall have a receiving hopper with sufficient capacity to provide for a uniform spreading operation and a distribution system that places the mix uniformly, without segregation. The paver shall be equipped with and use a vibratory screed system with heaters or burners. The screed system shall be capable of producing a finished surface of the required evenness and texture without tearing, shoving, or gouging the mixture. Pavers with extendible screed units as part of the system shall have auger extensions and tunnel extenders as necessary. Automatic screed controls for grade and slope shall be used at all times unless otherwise authorized by the Engineer. The controls shall automatically adjust the screed to compensate for irregularities in the preceding course or existing base. The controls shall maintain the proper transverse slope and be readily adjustable, and shall operate from a fixed or moving reference such as a grade wire or floating beam.

Rollers: All rollers shall be self-propelled and designed for compaction of bituminous concrete. Rollers types shall include steel-wheeled, pneumatic or a combination thereof. Rollers that operate in a dynamic mode shall have drums that use a vibratory or oscillatory system or combination of. Vibratory rollers shall be equipped with indicators for amplitude, frequency and speed settings/readouts to measure the impacts per foot during the compaction process. Oscillatory rollers shall be equipped with frequency indicators. Rollers can operate in the dynamic mode using the oscillatory system on concrete structures such as bridges and catch basins if at the lowest frequency setting.

Pneumatic tire rollers shall be equipped with wide-tread compaction tires capable of exerting an average contact pressure from 60 to 90 pounds per square inch uniformly over the surface, The Contractor shall furnish documentation to the Engineer regarding tire size; pressure and loading

to confirm that the proper contact pressure is being developed and that the loading and contact pressure is uniform for all wheels.

Lighting: For paving operations, which will be performed during hours of darkness, the paving equipment shall be equipped with lighting fixtures as described below, or with an approved equal. Lighting shall minimize glare to passing traffic. The lighting options and minimum number of fixtures are listed in Tables 4.06-1 and 4.06-2:

TABLE 4.06-1: Minimum Paver Lighting

Option	Fixture Configuration	Fixture Quantity	Requirement
1	Type A	3	Mount over screed area
	Type B (narrow) or Type C (spot)	2	Aim to auger and guideline
	Type B (wide) or Type C (flood)	2	Aim 25 feet behind paving machine
2	Type D Balloon	2	Mount over screed area

TABLE 4.06-2: Minimum Roller Lighting

Option	Fixture Configuration*	Fixture Quantity	Requirement
1	Type B (wide)	2	Aim 50 feet in front of and behind roller
	Type B (narrow)	2	Aim 100 feet in front of and behind roller
2	Type C (flood)	2	Aim 50 feet in front of and behind roller
	Type C (spot)	2	Aim 100 feet in front of and behind roller
3	Type D Balloon	1	Mount above the roller

*All fixtures shall be mounted above the roller.

Type A: Fluorescent fixture shall be heavy-duty industrial type. Each fixture shall have a minimum output of 8,000 lumens. The fixtures shall be mounted horizontally, and be designed for continuous row installation.

Type B: Each floodlight fixture shall have a minimum output of 18,000 lumens.

Type C: Each fixture shall have a minimum output of 19,000 lumens.

Type D: Balloon light: Each balloon light fixture shall have a minimum output of 50,000 lumens, and emit light equally in all directions.

Material Transfer Vehicle (MTV): A MTV shall be used when placing a bituminous concrete surface course as indicated in the contract documents.

The MTV must be a vehicle specifically designed for the purpose of delivering the bituminous concrete mixture from the delivery vehicle to the paver. The MTV must continuously remix the bituminous concrete mixture throughout the placement process.

The use of a MTV will be subject to the requirements stated in Article 1.07.05- Load Restrictions. The Engineer may limit the use of the vehicle if it is determined that the use of the MTV may damage highway components, utilities, or bridges. The Contractor shall submit to the Engineer at time of pre-construction the following information:

- The make and model of the MTV.
- The individual axle weights and axle spacing for each piece of paving equipment (haul vehicle, MTV and paver).
- A working drawing showing the axle spacing in combination with all pieces of equipment that will comprise the paving echelon.

4. Test Section: The Engineer may require the Contractor to place a test section whenever the requirements of this specification or Section M.04 are not met.

The Contractor shall submit the quantity of mixture to be placed and the location of the test section for review and approval by the Engineer. The same equipment used in the construction of a passing test section shall be used throughout production.

If a test section fails to meet specifications, the Contractor shall stop production, make necessary adjustments to the job mix formula, Plant operations, or procedures for placement and compaction. The Contractor shall construct test sections, as allowed by the Engineer, until all the required specifications are met. All test sections shall also be subject to removal as set forth in Article 1.06.04.

5. Transitions for Roadway Surface: Transitions shall be formed at any point on the roadway where the pavement surface deviates, vertically, from the uniform longitudinal profile as specified on the plans. Whether formed by milling or by bituminous concrete mixture, all transition lengths shall conform to the criteria below unless otherwise specified.

<u>Permanent Transitions</u>: Defined as any gradual change in pavement elevation that remains as a permanent part of the work.

A transition shall be constructed no closer than 75 feet from either side of a bridge expansion joint or parapet. All permanent transitions, leading and trailing, shall meet the following length requirements:

a) Posted speed limit is greater than 35 MPH: 30 feet per inch of elevation change.
b) Posted speed limit is 35 MPH or less: 15 feet per inch of elevation change.

In areas where it is impractical to use the above described permanent transition lengths the use of a shorter permanent transition length may be permitted when approved by the Engineer.

Temporary Transitions: A temporary transition is defined as a transition that does not remain a permanent part of the work. All temporary transitions shall meet the following length requirements:

a) Posted speed limit is greater than 50 MPH
   (1) Leading Transitions = 15 feet per inch of vertical change (thickness)
   (2) Trailing Transitions = 6 feet per inch of vertical change (thickness)

b) Posted speed limit is 40, 45, or 50 MPH
   (1) Leading and Trailing = 4 feet per inch of vertical change (thickness)

c) Posted speed limit is 35 MPH or less
   (1) Leading and Trailing = 3 feet per inch of vertical change (thickness)

Note: Any temporary transition to be in-place over the winter shutdown period or during extended periods of inactivity (more than 14 calendar days) shall conform to the greater than 50 MPH requirements shown above.

6. Spreading and Finishing of Mixture: Prior to the placement of the mixture, the underlying base course shall be brought to the plan grade and cross section within the allowable tolerance.

Immediately before placing a bituminous concrete lift, a uniform coating of tack coat shall be applied to all existing underlying pavement surfaces and on the exposed surface of a wedge joint. Such surfaces shall be clean and dry. Sweeping or other means acceptable to the Engineer shall be used.

The mixture shall not be placed whenever the surface is wet or frozen.

The Engineer may verify the mixture temperature by means of a probe or infrared type of thermometer. The Engineer may reject the load based on readings from a probe type thermometer and the specify temperature in the quality control plan (QCP) for placement.

Tack Coat Application: The tack coat shall be applied by a pressurized spray system that results in uniform overlapping coverage at an application rate of 0.03 to 0.05 gallons per square yard for a non-milled surface and an application rate of 0.05 to 0.07 gallons per square yard for a milled surface. For areas where both milled and un-milled surfaces occur, the tack coat shall be an application rate of 0.03 to 0.05 gallons per square yard. The Engineer must approve the equipment and the method of measurement prior to use. The material for tack coat shall not be heated in excess of 160°F and shall not be further diluted.

Tack coat shall be allowed sufficient time to break prior to any paving equipment or haul vehicles driving on it.

The Contractor may request to omit the tack coat application between bituminous concrete layers that have not been exposed to traffic and are placed during the same work shift. Requests to omit tack coat application on the exposed surface of a wedge joint will not be considered.

Placement: The mixture shall be placed and compacted to provide a smooth, dense surface with a uniform texture and no segregation at the specified thickness and dimensions indicated in the plans and specifications.

When unforeseen weather conditions prevent further placement of the mixture, the Engineer is not obligated to accept or place the bituminous concrete mixture that is in transit from the Plant.

In advance of paving, traffic control requirements shall be set up, maintained throughout placement, and shall not be removed until all associated work including density testing is completed.

The Contractor shall inspect the newly placed pavement for defects in the mixture or placement before rolling is started. Any deviation from standard crown or section shall be immediately remedied by placing additional mixture or removing surplus mixture. Such defects shall be corrected to the satisfaction of the Engineer.

Where it is impractical due to physical limitations to operate the paving equipment, the Engineer may permit the use of other methods or equipment. Where hand spreading is permitted, the mixture shall be placed by means of suitable shovels and other tools, and in a uniformly loose layer at a thickness that will result in a completed pavement meeting the designed grade and elevation.

Placement Tolerances: Each lift of bituminous concrete placed at a specified thickness shall meet the following requirements for thickness and area. Any pavement exceeding these limits shall be subject to an adjustment or removal. Lift tolerances will not relieve the Contractor from meeting the final designed grade. Lifts of specified non-uniform thickness, i.e. wedge or shim course, shall not be subject to thickness and area adjustments.

a) Thickness- Where the average thickness of the lift exceeds that shown on the plans beyond the tolerances shown in Table 4.06-3, the Engineer will calculate the thickness adjustment in accordance with Article 4.06.04.

TABLE 4.06-3: Thickness Tolerances

Mixture Designation	Lift Tolerance
S1	+/- ⅜ inch
S0.25, S0.375, S0.5	+/- ¼ inch

Where the thickness of the lift of mixture is less than that shown on the plans beyond the tolerances shown in Table 4.06-3, the Contractor, with the approval of the Engineer, shall take corrective action in accordance with this specification.

b) Area- Where the width of the lift exceeds that shown on the plans by more than the specified thickness, the Engineer will calculate the area adjustment in accordance with Article 4.06.04.

c) Delivered Weight of Mixture - When the delivery ticket shows that the vehicle exceeds the allowable gross weight for the vehicle type, the Engineer will calculate the weight adjustment in accordance with Article 4.06.04.

Transverse Joints: All transverse joints shall be formed by saw-cutting to expose the full thickness of the lift. Tack coat shall be applied to the sawn face immediately prior to additional mixture being placed.

Compaction: The Contractor shall compact the mixture to meet the density requirements as stated in Article 4.06.03 and eliminate all roller marks without displacement, shoving, cracking, or aggregate breakage.

When placing a lift with a specified thickness less than one and one-half (1 ½) inches, or a wedge course, the Contractor shall provide a minimum rolling pattern as determined by the development of a compaction curve. The procedure to be used shall be documented in the Contractor's QCP for placement and demonstrated on the first day of placement.

The use of the vibratory system on concrete structures is prohibited. When approved by the Engineer, the Contractor may operate a roller using an oscillatory system at the lowest frequency setting.

If the Engineer determines that the use of compaction equipment in the dynamic mode may damage highway components, utilities, or adjacent property, the Contractor shall provide alternate compaction equipment. The Engineer may allow the Contractor to operate rollers in the dynamic mode using the oscillatory system at the lowest frequency setting.

Rollers operating in the dynamic mode shall be shut off when changing directions.

These allowances will not relieve the Contractor from meeting pavement compaction requirements.

Surface Requirements:
Each lift of the surface course shall not vary more than ¼ inch from a Contractor-supplied 10 foot straightedge. For all other lifts, the tolerance shall be ⅜ inch. Such tolerance will apply to all paved areas.

Any surface that exhibits these characteristics or exceeds these tolerances shall be corrected by the Contractor at its own expense.

7. Longitudinal Joint Construction Methods: The Contractor shall use Method I- Notched Wedge Joint (see Figure 4.06-1) when constructing longitudinal joints where lift thicknesses are between 1½ and 3 inches. S1.0 mixtures shall be excluded from using Method I. Method II Butt Joint (see Figure 4.06-2) shall be used for lifts less than 1½ inches or greater than or equal to 3 inches. During placement of multiple lifts, the longitudinal joint shall be constructed in such a

manner that it is located at least 6 inches from the joint in the lift immediately below. The joint in the final lift shall be at the centerline or at lane lines. Each longitudinal joint shall maintain a consistent offset from the centerline of the roadway along its entire length. The difference in elevation between the two faces of any completed longitudinal joint shall not exceed ¼ inch in any location.

Method I - Notched Wedge Joint:

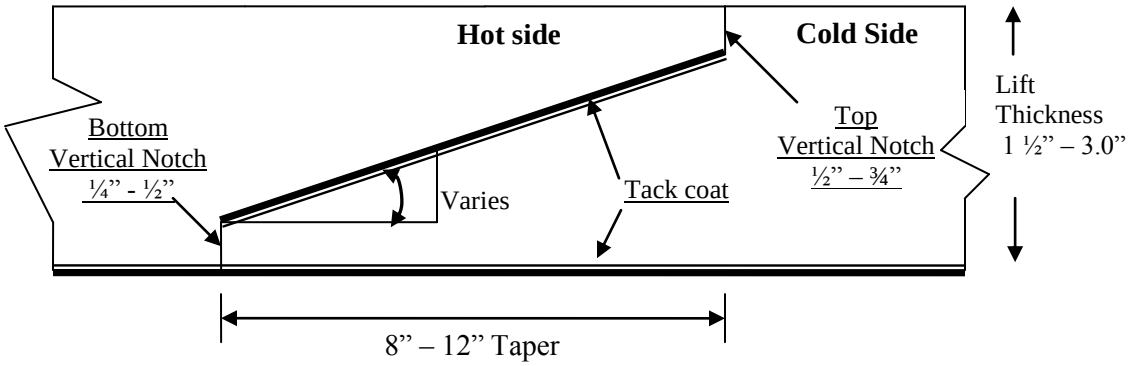

FIGURE 4.06-1: Notched Wedge Joint

A notched wedge joint shall be constructed as shown in Figure 4.06-1 using a device that is attached to the paver screed and is capable of independently adjusting the top and bottom vertical notches. The device shall have an integrated vibratory system.

The taper portion of the wedge joint must be placed over the longitudinal joint in the lift immediately below. The top vertical notch must be located at the centerline or lane line in the final lift. The requirement for paving full width "curb to curb" as described in Method II may be waived if addressed in the QC plan and approved by the Engineer.

The taper portion of the wedge joint shall be evenly compacted using equipment other than the paver or notch wedge joint device.

The taper portion of the wedge joint shall not be exposed to traffic for more than 5 calendar days.

Any exposed wedge joint must be located to allow for the free draining of water from the road surface.

The Engineer reserves the right to define the paving limits when using a wedge joint that will be exposed to traffic.

If Method I, Notched Wedge Joint cannot be used on lifts between 1.5 and 3 inches, Method III Butt Joint may be substituted according to the requirements below for "Method III – Butt Joint with Hot Pour Rubberized Asphalt Treatment."

Method II - Butt Joint:

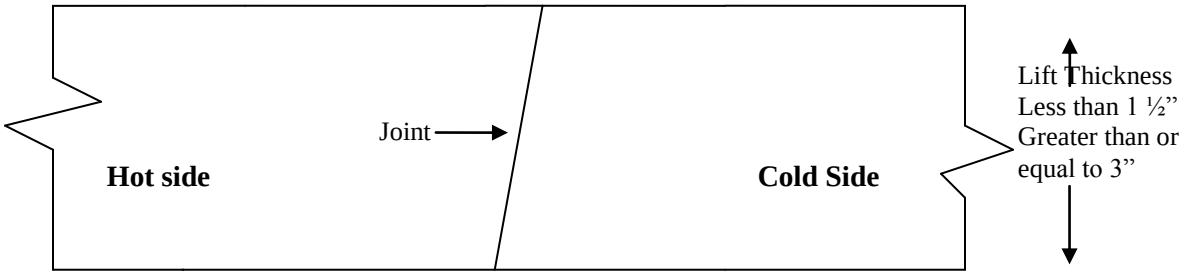

FIGURE 4.06-2: Butt Joint

When adjoining passes are placed, the Contractor shall utilize equipment that creates a near vertical edge (refer to Figure 4.06-2). The completing pass (hot side) shall have sufficient mixture so that the compacted thickness is not less than the previous pass (cold side). The end gate on the paver should be set so there is an overlap onto the cold side of the joint.

The Contractor shall not allow any butt joint to be incomplete at the end of a work shift unless otherwise allowed by the Engineer. When using this method, the Contractor is not allowed to leave a vertical edge exposed at the end of a work shift and must complete paving of the roadway full width "curb to curb."

Method III- Butt Joint with Hot Poured Rubberized Asphalt Treatment: If Method I Wedge Joint cannot be used due to physical constraints in certain limited locations; the contractor may submit a request in writing for approval by the Engineer, to utilize Method III Butt Joint as a substitution in those locations. There shall be no additional measurement or payment made when the Method III Butt Joint is substituted for the Method I Notched Wedge Joint. When required by the contract or approved by the Engineer, Method III (see Figure 4.06-3) shall be used.

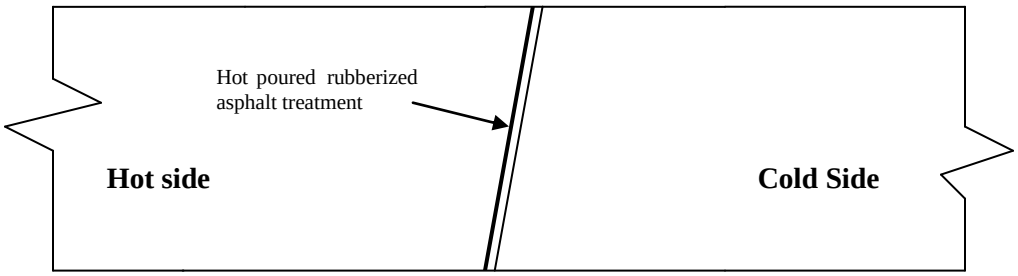

FIGURE 4.06-3: Butt Joint with Hot Poured Rubberized Asphalt Treatment

All of the requirements of Method II must be met with Method III. In addition, the longitudinal vertical edge must be treated with a rubberized joint seal material meeting the requirements of ASTM D 6690, Type 2. The joint sealant shall be placed on the face of the "cold side" of the butt joint as shown above prior to placing the "hot side" of the butt joint. The joint seal material shall be applied in accordance with the manufacturer's recommendation so as to provide a uniform coverage and avoid excess bleeding onto the newly placed pavement.

8. Contractor Quality Control (QC) Requirements: The Contractor shall be responsible for maintaining adequate quality control procedures throughout the production and placement operations. Therefore, the Contractor must ensure that the materials, mixture and work provided by Subcontractors, Suppliers and Producers also meet contract specification requirements.

This effort must be documented in Quality Control Plans and address the actions, inspection, or sampling and testing necessary to keep the production and placement operations in control, to determine when an operation has gone out of control and to respond to correct the situation in a timely fashion.

The Standard QCP for production shall consist of the quality control program specific to the production facility.

There are three components to the QCP for placement: a Standard QCP, a Project Summary Sheet that details project specific information, and if applicable a separate Extended Season Paving Plan as required in Section 9 "Temperature and Seasonal Requirements".

The Standard QCP for both production and placement shall be submitted to the Department for approval each calendar year and.at a minimum of 30 days prior to production or placement.

Production or placement shall not occur until all QCP components have been approved by the Engineer.

Each QCP shall include the name and qualifications of a Quality Control Manager (QCM). The QCM shall be responsible for the administration of the QCP, and any modifications that may become necessary. The QCM shall have the ability to direct all Contractor personnel on the project during paving operations. All Contractor sampling, inspection and test reports shall be reviewed and signed by the QCM prior to submittal to the Engineer. The QCPs shall also include the name and qualifications of any outside testing laboratory performing any QC functions on behalf of the Contractor.

Approval of the QCP does not relieve the Contractor of its responsibility to comply with the project specifications. The Contractor may modify the QCPs as work progresses and must document the changes in writing prior to resuming operations. These changes include but are not limited to changes in quality control procedures or personnel. The Department reserves the right to deny significant changes to the QCPs.

QCP for Production: Refer to Section M.04.03-1.

QCP for Placement: The Standard QCP, Project Summary Sheet, and Extended Season Paving Plan shall conform to the format provided by the Engineer. The format is available at http://www.ct.gov/dot/lib/dot/documents/dconstruction/pat/qcp_outline_hma_placement.pdf.

The Contractor shall perform all quality control sampling and testing, provide inspection, and exercise management control to ensure that placement conforms to the requirements as outlined in its QCP during all phases of the work. The Contractor shall document these activities for each day of placement.

The Contractor shall submit complete field density testing and inspection records to the Engineer within 48 hours in a manner acceptable to the Engineer.

The Contractor may obtain one (1) mat core and one (1) joint core per day for process control, provided this process is detailed in the QCP. The results of these process control cores shall not be used to dispute the Department determinations from the acceptance cores. The Contractor shall submit the location of each process control core to the Engineer for approval prior to taking the core. The core holes shall be filled to the same requirements described in sub-article 4.06.03-10.

9. Temperature and Seasonal Requirements: Paving, including placement of temporary pavements, shall be divided into two seasons, "In-Season" and "Extended-Season". In-Season paving occurs from May 1 – October 14, and Extended Season paving occurs from October 15-April 30. The following requirements shall apply unless otherwise authorized or directed by the Engineer:

- Mixtures shall not be placed when the air or sub base temperature is less than 40°F regardless of the season.
- Should paving operations be scheduled during the Extended Season, the Contractor must submit an Extended Season Paving Plan for the project that addresses minimum delivered mix temperature considering WMA, PMA or other additives, maximum paver speed, enhanced rolling patterns and the method to balance mixture delivery and placement operations. Paving during Extended Season shall not commence until the Engineer has approved the plan.

10. Obtaining Bituminous Concrete Cores: This Section describes the methodology and sampling frequency the Contractor shall use to obtain pavement cores.

Coring shall be performed on each lift specified to a thickness of one and one-half (1 ½) inches or more within 5 days of placement. The Contractor shall extract cores (4 or 6 inch diameter for S0.25, S0.375 and S0.5 mixtures 6 inch diameter for S1.0 mixtures) from locations determined

by the Engineer. The Engineer must witness the extraction, labeling of cores and filling of the core holes.

A density lot will be complete when the full designed paving width and length of the lot has been placed and shall include all longitudinal joints between the curb lines. HMA S1 mixes are excluded from the longitudinal joint density requirements.

A standard density lot is the quantity of material placed within the defined area exclusive of any structures. A combo density lot is the quantity of material placed within the defined area inclusive of structures less than or equal to 500 feet long. A bridge density lot is the quantity of material placed on a structure larger than 500 feet in length.

Prior to paving, the type and number of lot (s) shall be determined by the Engineer. The number of cores per lot shall be determined in accordance to Tables 4.06-4, 4.06-5A and 4.06-5B. Noncontiguous areas such as highway ramps may be combined to create one lot. Combined areas should be set up to target a 2000 ton lot size. The longitudinal locations of mat cores within a lot containing multiple paving passes will be determined using the total distance covered by the paver. The locations of the joint cores will be determined using the total length of longitudinal joints within the lot.

Sampling is in accordance with the following tables:

TABLE 4.06-4: Bridge Density Lot(s)

Length of Each Structure (Feet)	No. of Mat Cores	No. of Joint Cores
≤ 500’	See Table 4.06-5(A or B)	See Table 4.06-5(A or B)
501’ – 1500’	3	3
1501’ – 2500’	4	4
2501’ and greater	5	5

All material placed on structures less than or equal to 500 feet in length shall be included as part of a standard lot as follows:

TABLE 4.06-5A: Standard and Combo Density Lot(s) ≥ 500 Tons

Lot Type	No. of Mat Cores		No. of Joint Cores		Target Lot Size (Tons)
Standard Lot / Without Bridge (s)	4		4		2000
Combo Lot / Lot With Bridge(s)[1]	4 plus	1 per structure (≤ 300’)	4 plus	1 per structure (≤ 300’)	2000
		2 per structure (301’ – 500’)		2 per structure (301’ – 500’)	

TABLE 4.06-5B: Standard and Combo Density Lot < 500 Tons

Lot Type	No. of Mat Cores		No. of Joint Cores	
Standard Lot / Without Bridge (s)	3		3	
Combo Lot / Lot With Bridge(s)[1]	2 plus	1 per structure	2 plus	1 per structure

Note:
[1] If a combo lot mat or joint core location randomly falls on a structure, the core is to be obtained on the structure in addition to the core(s) required on the structure.

After the lift has been compacted and cooled, the Contractor shall cut cores to a depth equal to or greater than the lift thickness and remove them without damaging the lift(s) to be tested. Any core that is damaged or obviously defective while being obtained will be replaced with a new core from a location within 2 feet measured in a longitudinal direction.

A mat core shall not be located any closer than one foot from the edge of a paver pass. If a random number locates a core less than one foot from any edge, the location will be adjusted by the Engineer so that the outer edge of the core is one foot from the edge of the paver pass.

Method I, Notched Wedge Joint cores shall be taken so that the center of the core is 5 inches from the visible joint on the hot mat side (Figure 4.06-5).

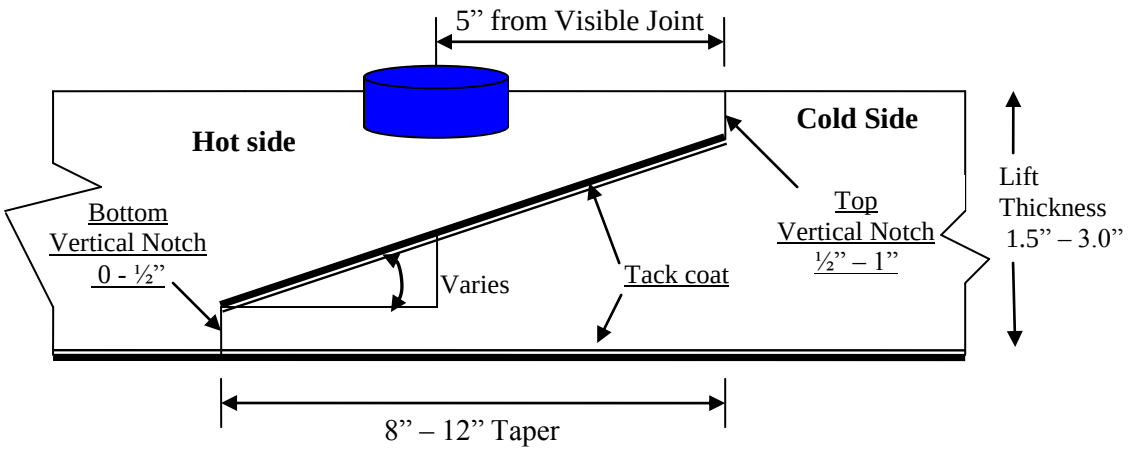

FIGURE 4.06-5: Notched Wedge Joint Cores

When Method II or Method III Butt Joint is utilized, cores shall be taken from the hot side so the edge of the core is within 1 inch of the longitudinal joint.

The cores shall be labeled by the Contractor with the project number, date placed, lot number and sub-lot number. The core’s label shall, include “M” for a mat core and “J” for a joint core. A mat core from the second lot and first sub-lot shall be labeled “M2 – 1” (Figure 4.06-4). The Engineer shall fill out a MAT-109 to accompany the cores. The Contractor shall deliver the

cores and MAT-109 to the Department's Central Lab. The Contractor shall use a container approved by the Engineer. The container shall have a lid capable of being locked shut and tamper proof. The Contractor shall use foam, bubble wrap, or another suitable material to prevent the cores from being damaged during handling and transportation. Once the cores and MAT-109 are in the container the Engineer will secure the lid using a security seal. The security seal's identification number must be documented on the MAT-109. Central Lab personnel will break the security seal and take possession of the cores.

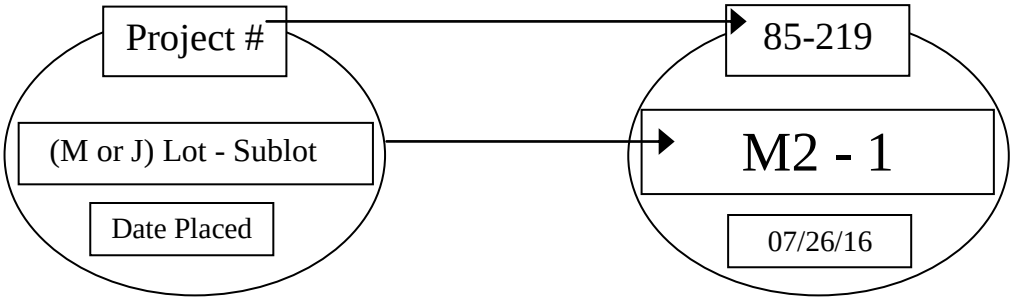

FIGURE 4.06-4: Labeling of Cores

Each core hole shall be filled within four hours upon core extraction. Prior to being filled, the hole shall be prepared by removing any free water and applying tack coat using a brush or other means to uniformly cover the cut surface. The core hole shall be filled using a bituminous concrete mixture at a minimum temperature of 240ºF containing the same or smaller nominal maximum aggregate size and compacted with a hand compactor or other mechanical means to the maximum compaction possible. The bituminous concrete shall be compacted to ⅛ inch above the finished pavement.

11. Acceptance Sampling and Testing: Sampling and testing shall be performed at a frequency not less than the minimum frequency specified in Section M.04 and sub-article 4.06.03-10.

Sampling shall be performed in accordance with ASTM D 3665, or a statistically based procedure of stratified random sampling approved by the Engineer.

Plant Material Acceptance: The Contractor shall provide the required sampling and testing during all phases of the work in accordance with Section M.04. The Department will verify the Contractor's acceptance test results. Should any test results exceed the specified tolerances in the Department's current QA Program for Materials, the Contractor test results for a subject lot or sub lot may be replaced with the Department's results for the purpose of calculating adjustments. The verification procedure is included in the Department's current QA Program for Materials.

Density Acceptance: The Engineer will perform all acceptance testing in accordance with AASHTO T 331. The density of each core will be determined using the daily production's

average maximum theoretical specific gravity (Gmm) established during the testing of the parent material at the Plant. When there was no testing of the parent material or any Gmm exceeds the specified tolerances in the Department's current QA Program for Materials, the Engineer will determine the maximum theoretical density value to be used for density calculations.

12. Density Dispute Resolution Process: The Contractor and Engineer will work in partnership to avoid potential conflicts and to resolve any differences that may arise during quality control or acceptance testing for density. Both parties will review their sampling and testing procedures and results and share their findings. If the Contractor disputes the Engineer's test results, the Contractor must submit in writing a request to initiate the Dispute Resolution Process within 7 calendar days of the notification of the test results. No request for dispute resolution will be allowed unless the Contractor provides quality control results within the timeframe described in sub-article 4.06.03-9 supporting its position. No request for Dispute Resolution will be allowed for a Density Lot in which any core was not taken within the required 5 calendar days of placement. Should the dispute not be resolved through evaluation of existing testing data or procedures, the Engineer may authorize the Contractor to obtain a new set of core samples per disputed lot. The core samples must be extracted no later than 14 calendar days from the date of Engineer's authorization.

The number and location (mat, joint, or structure) of the cores taken for dispute resolution must reflect the number and location of the original cores. The location of each core shall be randomly located within the respective original sub lot. All such cores shall be extracted and the core hole filled using the procedure outlined in Article 4.06.03. The dispute resolution results shall be added to the original results and averaged for determining the final in-place density value.

13. Corrective Work Procedure:
If pavement placed by the Contractor does not meet the specifications, and the Engineer requires its replacement or correction, the Contractor shall:

a) Propose a corrective procedure to the Engineer for review and approval prior to any corrective work commencing. The proposal shall include:
   - Limits of pavement to be replaced or corrected, indicating stationing or other landmarks that are readily distinguishable.
   - Proposed work schedule.
   - Construction method and sequence of operations.
   - Methods of maintenance and protection of traffic.
   - Material sources.
   - Names and telephone numbers of supervising personnel.

b) Any corrective courses placed as the final wearing surface shall match the specified lift thickness after compaction.

14. Protection of the Work: The Contractor shall protect all sections of the newly finished pavement from damage that may occur as a result of the Contractor's operations for the duration of the Project.

15. Cut Bituminous Concrete Pavement: Work under this item shall consist of making a straight-line cut in the pavement to the lines delineated on the plans or as directed by the Engineer. The cut shall provide a straight, clean, vertical face with no cracking, tearing or breakage along the cut edge.

4.06.04—Method of Measurement:

1. HMA S* or PMA S*: The quantity of bituminous concrete measured for payment will be determined by the documented net weight in tons accepted by the Engineer in accordance with this specification and Section M.04.

2. Adjustments: Adjustments may be applied to bituminous concrete quantities and will be measured for payment using the following formulas:

Yield Factor for Adjustment Calculation = 0.0575 Tons/SY/inch

Actual Area = [(Measured Length (ft)) x (Avg. of width measurements (ft))]

Actual Thickness (t) = Total tons delivered / [Actual Area (SY) x 0.0575 Tons/SY/inch]

a) Area: If the average width exceeds the allowable tolerance, an adjustment will be made using the following formula. The tolerance for width is equal to the specified thickness (in.) of the lift being placed.

Tons Adjusted for Area (T_A) = [(L x W_{adj})/9] x (t) x 0.0575 Tons/SY/inch = (-) Tons

Where: L = Length (ft)
(t) = Actual thickness (inches)
W_{adj} = (Designed width (ft) + tolerance /12) - Measured Width)

b) Thickness: If the actual average thickness is less than the allowable tolerance, the Contractor shall submit a repair procedure to the Engineer for approval. If the actual thickness exceeds the allowable tolerance, an adjustment will be made using the following formula:
Tons Adjusted for Thickness (T_T) = A x t_{adj} x 0.0575 = (-) Tons

Where: A = Area = {[L x (Designed width + tolerance (lift thickness)/12)] / 9}
t_{adj} = Adjusted thickness = [(Dt + tolerance) - Actual thickness]
Dt = Designed thickness (inches)

c) Weight: If the quantity of bituminous concrete representing the mixture delivered to the project is in excess of the allowable gross vehicle weight (GVW) for each vehicle, an adjustment will be made using the following formula:

Tons Adjusted for Weight (T_W) = GVW – DGW= (-) Tons

Where: DGW = Delivered gross weight as shown on the delivery ticket or measured on a certified scale.

d) Mixture Adjustment: The quantity of bituminous concrete representing the production lot at the Plant will be adjusted as follow:

i. Non-PWL Production Lot (less than 3500 tons):
The adjustment values in Table 4.06-6 and 4.06-7 shall be calculated for each sub lot based on the Air Void (AV) and Asphalt Binder Content (PB) test results for that sub lot. The total adjustment for each day's production (lot) will be computed using tables and the following formulas:

Tons Adjusted for Superpave Design (T_{SD}) = $[(AdjAV_t + AdjPB_t) / 100]$ X Tons

Percent Adjustment for Air Voids = $AdjAV_t = [AdjAV_1 + AdjAV_2 + AdjAV_i + \ldots + AdjAV_n)] /n$

Where: $AdjAV_t$ = Total percent air void adjustment value for the lot
$AdjAV_i$ = Adjustment value from Table 4.06-7 resulting from each sub lot or the average of the adjustment values resulting from multiple tests within a sub lot, as approved by the Engineer.
n = number of sub lots based on Table M.04.03-2

TABLE 4.06-6: Adjustment Values for Air Voids

Adjustment Value ($AdjAV_i$) (%)	S0.25, S0.375, S0.5, S1 Air Voids (AV)
+2.5	3.8 - 4.2
+3.125*(AV-3)	3.0 - 3.7
-3.125*(AV-5)	4.3 – 5.0
20*(AV-3)	2.3 – 2.9
-20*(AV-5)	5.1 – 5.7
-20.0	$\leq$ 2.2 or $\geq$ 5.8

Percent Adjustment for Asphalt Binder = $AdjPB_t = [(AdjPB_1 + AdjPB_2 + AdjPB_i + \ldots + AdjPB_n)] / n$

Where: $AdjPB_t$= Total percent asphalt binder adjustment value for the lot
$AdjPB_i$ = Adjustment value from Table 4.06-7 resulting from each sub lot
n = number of binder tests in a production lot

TABLE 4.06-7: Adjustment Values for Binder Content

Adjustment Value ($AdjAV_i$) (%)	**S0.25, S0.375, S0.5, S1 Pb**
0.0	JMF Pb ± 0.3
- 10.0	≤ JMF Pb - 0.4 or ≥ JMF Pb + 0.4

ii. PWL Production Lot (3500 tons or more):
For each lot, the adjustment values shall be calculated based on PWL for AV, VMA and PB test results. The lot will be considered as being normally distributed and all applicable equations in AASHTO R9 and AASHTO R42 Appendix X4 will apply.

Only one test result will be considered for each sub lot. The specification limits are listed in Section M.04.

For AV, PB and voids in mineral aggregate (VMA), the individual material quality characteristic adjustment (Adj) will be calculated as follow:

For PWL between 50 and 90%: $Adj(AV_t \text{ or } PB_t \text{ or } VMA_t) = (55 + 0.5\ PWL) - 100$
For PWL at and above 90%: $Adj(AV_t \text{ or } PB_t \text{ or } VMA_t) = (77.5 + 0.25\ PWL) - 100$

Where:
$AdjAV_t$ = Total percent AV adjustment value for the lot
$AdjPB_t$= Total percent PB adjustment value for the lot
$AdjVMA_t$= Total percent VMA adjustment value for the lot

Lots with PWL less than 50% in any of the three individual material quality characteristics will be evaluated under 1.06.04.

The total adjustment for each production lot will be computed using the following formula:

Tons Adjusted for Superpave Design (T_{SD}) = $[(0.5AdjAV_t + 0.25AdjPB_t + 0.25\ AdjVMA_t) / 100]$ X Tons

iii. Partial Lots:
Lots with less than 4 sublots will be combined with the prior lot. If there is no prior lot with equivalent material or if the last test result of the prior lot is over 30 calendar days old, the adjustment will be calculated as indicated in 4.06.04-2.d.i.
Lots with 4 or more sublots will be calculated as indicated in 4.06.04-2.d.ii.

e) Density Adjustment: The quantity of bituminous concrete measured for payment in a lift of pavement specified to be 1½ inches or greater may be adjusted for density. Separate density adjustments will be made for each lot and will not be combined to establish one density adjustment. The final lot quantity shall be the difference between the total payable tons for the project and the sum of the previous lots. If either the Mat or Joint adjustment value is "remove and replace", the density lot shall be removed and replaced (curb to curb).

No positive adjustment will be applied to a Density Lot in which any core was not taken within the required 5 calendar days of placement.

Tons Adjusted for Density (T_D) = [{(PA_M x .50) + (PA_J x .50)} / 100] X Density Lot Tons

Where: T_D = Total tons adjusted for density for each lot
PA_M = Mat density percent adjustment from Table 4.06-9
PA_J = Joint density percent adjustment from Table 4.06-10

TABLE 4.06-9: Adjustment Values for Pavement Mat density

Average Core Result Percent Mat Density	**Percent Adjustment (Bridge and Non-Bridge) (1)(2)**
97.1 - 100	-1.667*(ACRPD-98.5)
94.5 – 97.0	+2.5
93.5 – 94.4	+2.5*(ACRPD-93.5)
92.0 – 93.4	0
90.0 – 91.9	-5*(92-ACRPD)
88.0 – 89.9	-10*(91-ACRPD)
87.0 – 87.9	-30
86.9 or less	Remove and Replace (curb to curb)

TABLE 4.06-10: Adjustment Values for Pavement Joint Density

Average Core Result Percent Joint Density	Percent Adjustment (Bridge and Non-Bridge) [(1)(2)]
97.1 – 100	-1.667*(ACRPD-98.5)
93.5 – 97.0	+2.5
92.0 – 93.4	+1.667*(ACRPD-92)
91.0 – 91.9	0
89.0 – 90.9	-7.5*(91-ACRPD)
88.0 – 88.9	-15*(90-ACRPD)
87.0 – 87.9	-30
86.9 or less	Remove and Replace (curb to curb)

[(1)] ACRPD = Average Core Result Percent Density
[(2)] All Percent Adjustments to be rounded to the second decimal place. For example, 1.667 is to be rounded to 1.67.

3. Transitions for Roadway Surface: The installation of permanent transitions shall be measured under the appropriate item used in the formation of the transition.

The quantity of material used for the installation of temporary transitions shall be measured for payment under the appropriate item used in the formation of the transition. The installation and removal of a bond breaker, and the removal and disposal of any temporary transition formed by milling or with bituminous concrete pavement is not measured for payment.

4. Cut Bituminous Concrete Pavement: The quantity of bituminous concrete pavement cut will be measured in accordance with Article 2.02.04.

5. Material for Tack Coat: The quantity of tack coat will be measured for payment by the number of gallons furnished and applied on the Project and approved by the Engineer. No tack coat material shall be included that is placed in excess of the tolerance described in Article 4.06.03.

a. Container Method- Material furnished in a container will be measured to the nearest ½ gallon. The volume will be determined by either measuring the volume in the original container by a method approved by the Engineer or using a separate graduated container capable of measuring the volume to the nearest ½ gallon. The container in which the material is furnished must include the description of material, including lot number or batch number and manufacturer or product source.

b. Vehicle Method-

i. Measured by Weight: The number of gallons furnished will be determined by weighing the material on calibrated scales furnished by the Contractor. To convert weight to gallons, one of the following formulas will be used:

$$\text{Tack Coat (gallons at 60°F)} = \frac{\text{Measured Weight (pounds)}}{\text{Weight per gallon at 60°F}}$$

$$\text{Tack Coat (gallons at 60°F)} = \frac{\text{0.996 x Measured Weight (pounds)}}{\text{Weight per gallon at 77°F}}$$

ii. Measured by automated metering system on the delivery vehicle:

Tack Coat (gallons at 60°F) = Factor (from Table 4.06-11) multiplied by the measured gallons.

TABLE 4.06-11: Factor to Convert Volume of Tack Coat to 60°F

Tack Coat Application Temperature (°F)	Factor	Tack Coat Application Temperature (°F)	Factor
75	0.996	120	0.985
80	0.995	125	0.984
85	0.994	130	0.983
90	0.993	135	0.982
95	0.991	140	0.980
100	0.990	145	0.979
105	0.989	150	0.978
110	0.988	155	0.977
115	0.986	160	0.976

6. Material Transfer Vehicle (MTV): The furnishing and use of a MTV will be measured separately for payment based on the actual number of surface course tons delivered to a paver using the MTV.

4.06.05—Basis of Payment:

1. HMA S* or PMA S*: The furnishing and placing of bituminous concrete will be paid for at the Contract unit price per ton for “HMA S*” or “PMA S*”.

- All costs associated with providing illumination of the work area are included in the general cost of the work.
- All costs associated with cleaning the surface to be paved, including mechanical sweeping, are included in the general cost of the work. All costs associated with constructing longitudinal joints are included in the general cost of the work.

- All costs associated with obtaining cores for acceptance testing and dispute resolution are included in the general cost of the work.

2. Bituminous Concrete Adjustment Costs: The adjustment will be calculated using the formulas shown below if all of the measured adjustments in Article 4.06.04 are not equal to zero. A positive or negative adjustment will be applied to monies due the Contractor.

Production Lot: $[T_T + T_A + T_W + T_{SD}]$ **x Unit Price = Est. (P)**

Density Lot: T_D **x Unit Price = Est. (D)**

Where: Unit Price = Contract unit price per ton per type of mixture
T_* = Total tons of each adjustment calculated in Article 4.06.04

Est. ( ) = Pay Unit represented in dollars representing incentive or disincentive.

The Bituminous Concrete Adjustment Cost item if included in the bid proposal or estimate is not to be altered by the Contractor.

3. Transitions for Roadway Surface: The installation of permanent transitions shall be paid under the appropriate item used in the formation of the transition. The quantity of material used for the installation of temporary transitions shall be paid under the appropriate pay item used in the formation of the transition. The installation and removal of a bond breaker, and the removal and disposal of any temporary transition formed by milling or with bituminous concrete pavement is included in the general cost of the work.

4. The cutting of bituminous concrete pavement will be paid in accordance with Article 2.02.05.

5. Material for tack coat will be paid for at the Contract unit price per gallon at 60°F for "Material for Tack Coat".

6. The Material Transfer Vehicle (MTV) will be paid at the Contract unit price per ton for a "Material Transfer Vehicle".

Pay Item*	Pay Unit*
HMA S*	ton
PMA S*	ton
Bituminous Concrete Adjustment Cost	est.
Material for Tack Coat	gal.
Material Transfer Vehicle	ton

*For contracts administered by the State of Connecticut, Department of Administrative Services, the pay items and pay units are as shown in contract award price schedule.